N62376.AR.000339
NAWC TRENTON NJ
5090.3a
Naval Air Warfare C
Section: 8.02
Folder #: 401

NAVAL AIR WARFARE CENTER
AIRCRAFT DIVISION
Trenton, New Jersey

OPERATIONS AND MAINTENANCE MANUAL
for Interim Remedial Groundwater Treatment System
VOLUME I

Contract No.
N62470-93-D-3032

Delivery Order 0049

OHM Project 16546

Prepared by:
OHM Remediation Services Corp.

OHM Remediation
Services Corp.

Revision No. 0
September 8, 1995

US NAVY NORTHERN DIVISION
REMEDIAL ACTION CONTRACT (RAC)
CONTRACT NO. N62472-94-D-0398
DELIVERY ORDER NO. 0009

UPDATED OPERATION AND MAINTENANCE MANUAL GROUNDWATER TREATMENT BUILDING NAVAL AIR WARFARE CENTER - AIRCRAFT DIVISION TRENTON, NEW JERSEY

February 1997

Prepared for
U.S. Navy Northern Division

Revision	Date	Prepared by	Approved by	Pages Affected
1	2/5/97	D. Kopcow, P.E.	A. Holcomb, P.E., C.I.H.	All

The following changes, along with the attached pages, are meant to supersede the information contained in the Operation and Maintenance (O&M) Manual for Interim Remedial Groundwater Treatment System, prepared by OHM Remediation Services Corp., dated September 8, 1995.

Volume 1

Attachment 1: Replace with attached revised draft ELSA discharge permit.

Attachment 3: Replace with attached air discharge permit.

Section 7: Two of the four liquid-phase carbon units have been removed. The purpose of the two remaining carbon units are to act as a polishing step following the main treatment, air stripping.

Section 9: Delete reference to vapor-phase carbon units. Off-gas from the air stripper along with the equalization tank, clarifier, and pH adjustment tank are vented to a catalytic oxidation unit located outside the treatment building.

Volume 2

No changes.

Volume 3

Appendix Q: Delete vapor-phase carbon unit information and replace with attached O&M Manual for catalytic oxidation unit from Global Technologies.

Volume 4

Appendix T: Add attached as-built (red-lined) drawings for system modification.

Appendix U: Add new appendix for attached O&M Manual for low-profile air stripper (tray aerator type) from BISCO.

The following changes, along with the attached pages, are meant to supersede the information contained in the Operation and Maintenance (O&M) Manual for Interim Remedial Groundwater Treatment System, prepared by OHM Remediation Services Corp., dated September 8, 1995 and/or the Updated O&M Manual for Interim Remedial Groundwater Treatment System, prepared by FWENC, dated February 5, 1997.

Volume 1

Section 1: 13 new extraction wells have been added to the extraction well system in addition to the existing extraction well 15BR. They all operate in the same manner as 15BR. Electrical as-builts, well installation details, and pump details have all been previously submitted. The new wells include:

22BR
5BR
BRP-2
20BR
31S
48BR
41BR
16BR
4BR
BRP-1
29BR
8BR
45BR

In addition, the West Ditch Sump has been piped into the groundwater treatment system. Currently, five wells are operating for a total of 60 gpm in addition to the West Ditch Sump:

15BR - 15 gpm
48BR - 15 gpm
41BR - 10 gpm
20 BR - 15 gpm
45BR - 5 gpm

Volume 2

No changes.

Volume 3

No changes.

Volume 4

Appendix T: Add attached as-built drawings for system modification.

Appendix V: Add attached O&M Manuals for Goulds Pumps, Ampco Pumps, ABB Instrumentation Process Indicators, Integral Orifice Flow Elements, Pressure Transmitters, and Sparling Instruments Magnetic Flowmeters

TABLE OF CONTENTS

VOLUME I

1.0 INTRODUCTION 1-1

1.1 BACKGROUND 1-1
1.2 PERMIT COMPLIANCE - WATER DISCHARGE 1-1
1.3 PERMIT COMPLIANCE - AIR EMISSIONS 1-5
1.4 OPERATIONAL SAMPLING AND QUALITY CONTROL 1-5
1.5 SYSTEM OPERATION 1-6
1.6 ALARMS 1-9
1.7 TROUBLESHOOTING/MAINTENANCE 1-10
1.8 SAFETY 1-11
1.9 MATERIAL SAFETY DATA SHEETS 1-14
1.10 GLOSSARY OF TERMS 1-14
1.11 TREATMENT SYSTEM STAFFING AND QUALIFICATIONS 1-15

FIGURE ~~TABLE~~ 1.1 ~~DELETED~~ PROCESS FLOW DIAGRAM 1-17
FIGURE ~~TABLE~~ 1.2 DELETED P&I, D 1-18
TABLE 1.3 SAMPLE CHAIN OF CUSTODY 1-21
TABLE 1.4 SUMMARY OF CONTAMINANT HAZARDS AND TREATMENT SYSTEM CHEMICAL HAZARDS 1-22
TABLE 1.5 PERSONAL PROTECTION AND SANITATION CODES 1-23
TABLE 1.6 RESPIRATOR FOOTNOTES, CODE COMPONENTS, AND CODES 1-24

ATTACHMENT 1 ELSA DRAFT DISCHARGE PERMIT REQUIREMENTS (NOVEMBER 8, 1996 LETTER)
ATTACHMENT 2 SAMPLE DISCHARGE MONITORING REPORT (DMR)
ATTACHMENT 3 NJDEP AIR PERMIT REQUIREMENTS (MAY 22, 1996 LETTER)
ATTACHMENT 4 MSDSs

- Vinyl Chloride
- Trichloroethylene (Trichloroethylene)
- 1,2-cis-Dichloroethylene
- Caustic (Sodium Hydroxide)
- Sulfuric Acid
- Polymer/Flocculant (Magnifloc 1883A)
- Trichloroethylene - GC Standard
- 1,2-cis-Dichloroethene - GC Standard
- Vinyl Chloride - GC - Standard
- Helium (compressed gas)
- Methyl Alcohol (Methanol)
- Nitric Acid

2.0 PROGRAMMABLE LOGIC CONTROLLER 2-1

2.1 COMPONENTS OF THE PLC 2-1
2.2 DATA RETRIEVAL 2-1
2.3 FORMAT OF RETRIEVED DATA (RAW DATA FROM PLC) 2-3
2.4 DOCUMENTATION OF SYSTEM OPERATIONAL DATA 2-4
2.5 TROUBLESHOOTING 2-4
2.6 PLC INPUT AND OUTPUT IDENTIFIERS 2-4
2.7 LADDER LOGIC 2-4
2.8 TYPICAL WIRING SCHEMES 2-8

TABLE OF CONTENTS (CONTINUATION)

FIGURE 2.1 TYPICAL PUMP WIRING....2-9
FIGURE 2.2 TYPICAL LEVEL SWITCH WIRING....2-10
FIGURE 2.3 TYPICAL SHUTDOWN LEVEL SWITCH WIRING....2-11

ATTACHMENT 1 PLC INPUT AND OUTPUT IDENTIFIERS
ATTACHMENT 2 PLC LADDER LOGIC

3.0 SUBMERSIBLE PUMPS....3-1

3.1 EXTRACTION WELL PUMP....3-1
3.2 SUBMERSIBLE PUMP CONTROL....3-2
3.3 EQUALIZATION TANK TRANSFER PUMP, pH ADJUSTMENT TANK....3-3
3.4 EQUALIZATION TANK AND pH ADJUSTMENT TANK RECIRCULATION PUMPS....3-3
3.5 BACKWASH PUMP....3-3
3.6 BUILDING SUMP PUMP....3-3
3.7 TROUBLESHOOTING/MAINTENANCE....3-3

4.0 CLARIFIER....4-1

4.1 OPERATION....4-1
4.2 TROUBLESHOOTING/MAINTENANCE....4-2

5.0 SAND FILTER....5-1

5.1 OPERATION....5-1
5.2 TROUBLESHOOTING/MAINTENANCE....5-1

6.0 DUAL BAG FILTERS....6-1

6.1 START-UP AND OPERATION PROCEDURE....6-1
6.2 PROCEDURE FOR INITIAL LID CLOSING....6-2
6.3 FILTER BAG CHANGEOUT PROCEDURE....6-2
6.4 TROUBLESHOOTING/MAINTENANCE....6-3

7.0 LIQUID PHASE CARBON UNITS....7-1

7.1 OPERATION....7-1
7.2 MAINTENANCE....7-1
7.3 TROUBLESHOOTING AND PREVENTATIVE MAINTENANCE....7-5

8.0 EFFLUENT/BACKWASH SYSTEM....8-1

8.1 OPERATION....8-1
8.2 TROUBLESHOOTING/MAINTENANCE....8-1

9.0 VAPOR PHASE CARBON ADSORPTION FOR SYSTEM VENTS (DELETED)

10.0 CHEMICAL ADDITION SYSTEM....10-1

10.1 OPERATION....10-1
10.2 CHEMICAL MAKE-UP....10-3

11.0 COMPRESSED AIR SYSTEM....11-1

11.1 OPERATION....11-1
11.2 TROUBLESHOOTING/MAINTENANCE....11-1
11.3 SPARE PARTS....11-2

TABLE OF CONTENTS (CONTINUATION)

12.1 ROUTINE MAINTENANCE REQUIREMENTS 12-1

13.0 CALIBRATION 13-1

13.1 pH PROBE 13-1
13.2 DIFFERENTIAL PRESSURE SWITCHES 13-1

APPENDICES
APPENDIX A MANUFACTURER'S DATA - EXTRACTION WELL PUMP AND LEVEL CONTROLS
APPENDIX B MANUFACTURER'S DATA - SYSTEM TANKS
APPENDIX C MANUFACTURER'S DATA - SUBMERSIBLE SYSTEM PUMPS
APPENDIX D MANUFACTURER'S DATA - CHEMICAL FEED PUMPS/METERING PUMPS
APPENDIX E MANUFACTURER'S DATA - INCLINED PLATE SEPARATOR
APPENDIX F MANUFACTURER'S DATA - PNEUMATIC SLUDGE TRANSFER PUMP
APPENDIX G MANUFACTURER'S DATA - SAND FILTER
APPENDIX H MANUFACTURER'S DATA - DUAL BAG FILTERS
APPENDIX I MANUFACTURER'S DATA - INFLUENT AND EFFLUENT FLOWMETERS
APPENDIX J MANUFACTURER'S DATA - AIR COMPRESSOR

VOLUME II

APPENDIX K MANUFACTURER'S DATA - PROGRAMMABLE LOGIC CONTROLLER (PLC) LINE CONDITIONER, AND AUTODIALER

VOLUME III

APPENDIX L MANUFACTURER'S DATA - pH AND LEVEL PROBES AND CONTROLS
APPENDIX M MANUFACTURER'S DATA - GAS CHROMATOGRAPH (GC)
APPENDIX N MANUFACTURER'S DATA - COMPUTERS AND PRINTER FOR PLC AND GC
APPENDIX O MANUFACTURER'S DATA - PRE-ENGINEERED BUILDING
APPENDIX P MANUFACTURER'S DATA - ISCO 24-HOUR COMPOSITE SAMPLER
APPENDIX Q MANUFACTURER'S DATA - CATALYTIC OXIDATION UNIT

VOLUME IV

APPENDIX R MANUFACTURER'S DATA - LIQUID PHASE CARBON ADSORPTION UNITS (RENTED UNITS)
APPENDIX S MANUFACTURER'S DATA - MISCELLANEOUS EQUIPMENT
APPENDIX T AS-BUILT (RED-LINED) DRAWINGS
APPENDIX U MANUFACTURER'S DATA - AIR STRIPPER

CONTENTS

1.0 OVERVIEW 1

2.0 DESCRIPTION OF EQUIPMENT OPERATION 2

3.0 SYSTEM TESTS–PROCEDURES 2
- 3.1 General Test Procedures and Objectives 2
- 3.2 Documentation of System Start-Up 2
- 3.3 Cold Start-Up Procedure 3
  - 3.3.1 Cold Start-Up Procedure Checklist 4
- 3.4 Hot Start-Up Procedure 7
  - 3.4.1 Hot Start-Up Procedure Checklist 8

4.0 SCHEDULE 11

Appendices

A. First Month Start-Up Sampling Schedule
B. Proposed Carbon Unit Configuration Schedule

1.0 OVERVIEW

The Foster Wheeler Environmental Corp (Foster Wheeler) and Groundwater Technology Government Services (GSI) Team have been tasked with operations and maintenance of a groundwater treatment system at Naval Aviation Warfare Center (NAWC) Trenton, New Jersey. The site is located in mixed residential section and industrial section of Trenton, New Jersey. The purpose of the remedial system is to remove organic solvent contamination from groundwater. Contaminants of concern are Vinyl Chloride, Trichlorethylene/Trichloroethene, and 1,2-Dichloroethene.

The system consists of a single groundwater recovery well equipped with an electric groundwater depression pump. Groundwater is recovered from the aquifer to an equalization tank in which the pH is adjusted. Groundwater is then transferred to a clarifier where a flocculent is added to groundwater and is allowed to agglomerate solids as the flow passes a series of inclined plates. From the clarifier, the groundwater flows to another pH adjustment tank and on through a sand filter, where solids which were not recovered in the clarifier are retained. From the sand filter, the groundwater passes through a bag filter to a liquid phase granular activated carbon (GAC) adsorption unit. Treated groundwater is then sent to a discharge tank for testing and subsequent off-site discharge. The original intent of the system operation was to discharge the treated effluent to the Ewing Lawrence Sewerage Authority (ELSA), however, at this time the treated effluent will be sent to NAWC water treatment works and will meet the substantive disposal criteria specified by the ELSA permit.

The system was implemented as an interim remedial action under the regulatory framework of the Comprehensive Environmental Response, Compensation, and Liability Act (CERCLA). The Interim Action is funded by the Northern Division Naval Facilities Engineering Command (Northdiv) Remedial Action Contract (RAC) N62472-94-D-0398.

To date, the Foster Wheeler–GSI team has modified the system to discharge to the NAWC water treatment works, removed the spent carbon from the system, replaced the spent carbon with virgin carbon, and filled the system with potable water. It is the intent of the Foster Wheeler–GSI team to run potable water through the system in the full automatic mode of operation. This "cold start-up" of the system will be accomplished to ensure the proper operation of the system before remedial activities begin. "Hot Start-up" will commence once the Foster Wheeler–GSI team is comfortable with the logic and control responses of the system while operating in a full automatic mode. Hot start-up will consist of running through the cold start-up checklist with contaminated groundwater in lieu of potable water. In order to provide a systematic approach to the start-up task at the site, this plan was developed.

2.0 DETAILED DESCRIPTION OF SYSTEM OPERATION

Detailed description of system operation can be found in the ***OPERATIONS AND MAINTENANCE MANUAL for Interim Remedial Groundwater Treatment System, Volumes I -IV, 1995.*** The O&M Manuals were authored by OHM Remediation Services, Inc. This start-up procedure was derived from the system documentation provided by the manuals. The manuals should be on site during start-up and testing procedures and should be used in concert with this procedure. The Foster Wheeler-GSI team is in the process of updating the Operation and Maintenance (O&M) Manual, and information gathered during start-up and testing will assist in completion of the update.

3.0 SYSTEM TEST-PROCEDURES

3.1 General Test Procedures and Objectives

The general approach to start-up is to have an integrated and systematic approach to start-up procedures.

The function of the start-up team will be to implement start-up procedures, coordinate any additional equipment and support personnel to perform start-up, document all necessary forms, manuals and checklists, and maintain the required level of safety and integrity throughout the entire start-up and testing period.

The sequence of operations has been established to minimize the amount of effort required to test each subsequent system, minimize the quantity of potable water needed and disposed of, and minimize any temporary services or equipment needed to support the procedures. This sequence is intended as a guide and may be adjusted if required by schedule constraints. Any adjustment of this sequence is to be reviewed with the members of the Foster Wheeler-GSI project management team before proceeding.

3.2 Documentation of System Start-Up

Vendor and construction testing documentation will be required to confirm that all unit start-up and testing has been completed in accordance with the design documents. Vendor submittal documents, included in the O&M Manual, will be the primary documentation source for all vendor-supplied equipment data instrument ranges and set points, performance standards, and operations and maintenance characteristics and requirements. Therefore, a complete copy of all

approved vendor documentation will be available on site during all start-up and testing activities to include detailed drawings and technical materials.

The N2 Operator is responsible for maintaining and recording, in on-site files, documentation supplying historical record of all start-up sign-off and procedural activities. Initial set points for the equipment are provided in the O&M Manual. Since the initial set points may change during start-up and testing, changes in the set points should be documented in the logbook by the N2 Licensed Operator. It should be noted that many operating set points can not be determined until hot start-up proceeds and ultimately after the system is in operation for a period of time.

3.3 Cold Start-Up Procedure

Cold start-up will occur once all site preparation activities are completed. All logic and control sensors and meters should be installed and calibrated. Calibration criteria is listed in the O&M Manual. The procedure will begin with the filling of the influent equalization tank with potable water. Cold start-up will progress with the batch processing of the potable water. Previous re-circulation activities at the site were used to clean the system of residual contamination and prepare the system for operation.

Cold start-up activities will end with the disposal of the initial potable water batch to the NAWC water treatment works.

3.3.1 Cold Start-Up Procedure Checklist

Proceed with the test by performing the following steps in sequence.

		Initials	Date
1.	Position hand switches to place all pumps with redundant backups and all other equipment in the "ON" or "AUTO" mode.		
2.	Check that pH instruments are properly calibrated.		
3.	Check that correct quantity and concentration of treatment chemicals are available for each metering pump in each tank (Caustic, Acid, and polymer drum). Calibrate the chemical feed pumps utilizing the standpipes and vendor assistance as necessary.		
4.	Verify that influent equalization tank is filling with potable water. Check influent equalization tank level status as indicated by PLC.		
5.	Verify that the caustic addition system is operational. Note in logbook.		
6.	Energize influent equalization tank recirculation pump. Note: Do not start a re-circulation if the level is too low.		
7.	Observe the energization of the influent equalization tank transfer pump as the influent equalization tank reaches high level and the pH equals 10.		
8.	Note the pH reading at transfer pump start in the logbook.		
9.	Check discharge pressure of the equalization tank transfer pump. Record in logbook.		
10.	Check status of polymer addition system.		
11.	Verify that clarifier is filling with process water, monitor retention time, and discharge to the pH adjustment tank.		
12.	Start mixer and set agitation speed. NOTE: Do not start a tank mixer if the level is too low. Unstable mixer operation could result and cause damage to the tank.		
13.	Verify Flocculation Tank and clarifier are full. Check pH adjustment tank.		
14.	Check pH adjustment tank level status as indicated by PLC.		

15.	Energize pH adjustment tank recirculation pump.	_____	_____
16.	Validate pH adjustment is operational. Record in log book.	_____	_____
17.	Observe the energization of filter feed pump.	_____	_____
18.	Check discharge pressure of filter feed pump. Record in log book.	_____	_____
19.	Allow filter vessel to fill with liquid - watch differential pressure across filter and record values in log book.	_____	_____
20.	Allow bag filter housing to fill with liquid - watch differential pressure across bag filter and record values in log book.	_____	_____
21.	Check GAC for intended arrangement of series flow through units. Refer to Calgon O&M Manual for valve sequencing.	_____	_____
22.	Record differential pressure across GAC in log book.	_____	_____
23.	Validate effluent discharge tank is filling. Check effluent tank level status as indicated by PLC.	_____	_____
24.	Verify proper operation of pH sensor and record pH level in log book.	_____	_____
25.	Verify effluent equalization tank is full of water. Check tank level status as indicated by PLC.	_____	_____
26.	Initiate a manual backwash cycle. Observe the energization of backwash pump and the delivery of backwash fluid to the sand filter. Observe and record the change in differential pressure in the log book.	_____	_____
27.	Observe the energization of pneumatic sludge transfer pump and the delivery of the sludge to 55-gallon drum.	_____	_____
28.	Observe failure condition of a high sump signal and check operation of the sump pump.	_____	_____
29.	Verify Steps 1 through 28 have been done.	_____	_____
30.	Observe continual system operation for a minimum of 30 minutes. During this period, walk down entire system to verify dynamic stability, the absence of leaks, and the correct energization–de-energization of all equipment.	_____	_____

31. Record the tag numbers of all pumps in "ON" or "AUTO" and "OFF" and "STANDBY" modes in the log book. _____ _____

32. Record all pressures, pH, estimated levels in tanks, and flows. _____ _____

33. Check all failure conditions and manual overrides of the system. _____ _____

34. Using discharge pump to pump potable water to NAWC water treatment works the pump will continue to operate and drain liquid until low liquid level controls initiate pump de-energization. _____ _____

I certify that the above cold start-up sequence was initiated and achieved satisfactory results. The system is ready for hot start-up.

_____ _____

N2 Operator Date

3.4 Hot Start-Up Procedure

The purpose of the hot start-up is to verify that the groundwater recovery system and the system are dynamically stable and function in accordance with the desired PLC Logic. Furthermore, analytical parameters will be collected during hot start-up and final system adjustments, and set points will be addressed.

Analytical sampling procedures and locations are included in appendix A, First Month Start-Up Sampling Schedule. Adjustments requiring contaminated groundwater are included in the O&M Manual.

3.4.1 Hot Start-Up Procedure Checklist

Subsequent to the verification that the cold start-up is complete and documented, hot start-up may commence.

1.	Position hand switches to place all pumps with redundant backups and all other equipment in the "ON" or "AUTO" mode.	_____	_____
2.	Check pH instruments are properly calibrated.	_____	_____
3.	Check that correct quantity and concentration of treatment chemicals are available for each metering pump in each tank (Caustic, Acid, and polymer drum). Calibrate the chemical feed pumps utilizing the standpipes and vendor assistance as necessary.	_____	_____
4.	Initiate groundwater recovery in the "AUTO" mode.	_____	_____
5.	Verify that influent equalization tank is filling. Check influent equalization tank level status as indicated by PLC.	_____	_____
6.	Sample influent groundwater for parameters listed in appendix A.	_____	_____
7.	Verify that the caustic addition system is operational. Note in logbook.	_____	_____
8.	Energize influent equalization tank recirculation pump. Note: Do not start a tank mixer if the level is too low.	_____	_____
9.	Observe the energization of the influent equalization tank transfer pump as the influent equalization tank reaches high level and the pH equals 10.	_____	_____
10.	Note the pH reading at transfer pump start in the logbook.	_____	_____
11.	Check discharge pressure of the equalization tank transfer pump. Record in logbook.	_____	_____
12.	Check status of polymer addition system.	_____	_____
13.	Verify that clarifier is filling with process water, monitor retention time, and discharge to the pH adjustment tank.	_____	_____
14.	Start mixer and set agitation speed. NOTE: Do not start a tank mixer if the level is too low. Unstable mixer operation could result and cause damage to the tank.	_____	_____
15.	Verify flocculation tank and clarifier is full. Check pH adjustment tank.	_____	_____

16.	Conduct settling test as described in O&M Manual. Adjust influent pH as need. Note test results and pH adjustment in logbook.	_____	_____
17.	Check pH adjustment tank level status as indicated by PLC.	_____	_____
18.	Energize pH adjustment tank recirculation pump.	_____	_____
19.	Validate pH adjustment is operational. Record in log book.	_____	_____
20.	Observe the energization of filter feed pump.	_____	_____
21.	Check discharge pressure of filter feed pump. Record in log book.	_____	_____
22.	Allow filter vessel to fill with liquid - watch differential pressure across filter and record values in log book.	_____	_____
23.	Sample filter influent as specified in appendix A.	_____	_____
24.	Allow bag filter housing to fill with liquid - watch differential pressure across bag filter and record values in log book.	_____	_____
25.	Sample bag filter influent as specified in Appendix A.	_____	_____
26.	Check GAC for intended arrangement of series flow through units. Refer to appendix B for valve sequencing.	_____	_____
27.	Record differential pressure across GAC in log book.	_____	_____
28.	Validate effluent discharge tank is filling. Check Effluent Tank level status as indicated by PLC.	_____	_____
29.	Verify proper operation of pH sensor and record pH level in log book.	_____	_____
30.	Sample GAC influent and effluent as specified by appendix A.	_____	_____
31.	Verify effluent discharge tank is full of water. Check tank level status as indicated by PLC.	_____	_____
32.	Initiate a manual backwash cycle. Observe the energization of backwash pump and the delivery of backwash fluid to the Filter. Observe and record the change in differential pressure in the log book.	_____	_____

33.	Observe the energization of pneumatic sludge transfer pump and the delivery of the sludge to 55-gallon drum.	_____	_____
34.	Observe failure condition of high sump signal and check operation of the sump pump.	_____	_____
35.	Verify Steps 1 through 34 have been done.	_____	_____
36.	Observe continual system operation for a minimum of 30 minutes. During this period, walk down entire system to verify dynamic stability, the absence of leaks, and the correct energization-de-energization of all equipment.	_____	_____
37.	Record the tag numbers of all pumps in "ON" or "AUTO" and "OFF" and "STANDBY" modes in the log book.	_____	_____
38.	Record all pressures, pH, estimated levels in tanks, and flows.	_____	_____
39.	Check all failure conditions and manual overrides of the system.	_____	_____
40.	Sample effluent discharge tank for parameters outlined in appendix A.	_____	_____
41.	Using discharge pump to pump potable water to NAWC water treatment works, pump will continue to operate and drain liquid until low liquid level controls initiate pump de-energization.	_____	_____
42.	Set Emergency Phone numbers autodialer and verify operation	_____	_____

I certify that the above hot start-up sequence was initiated and achieved satisfactory results. The system is ready for operation.

N2 Operator _____ Date _____

4.0 SCHEDULE

All cold start-up testing and system shakedown activities are scheduled for the week of December 4th through 8th. Hot start-up and testing procedures will continue during the week of December 11th through the 15th.

APPENDIX A

FIRST MONTH START-UP SAMPLING SCHEDULE

Naval Air Warfare Center, Trenton NJ

First Month Startup Sampling Schedule

Parameter	Sampling Point	Frequency	Period	Type	Analysis (Lab/GC/Auto)	O & M or ELSA Req'd
Flow	1	Continuous	NA	NA	Data Logger	O & M
	10	Continuous	NA	NA	Data Logger	ELSA
pH	2	Continuous	NA	NA	Data Logger	O & M
	4	Continuous	NA	NA	Data Logger	O & M
	9	Continuous	NA	NA	Data Logger	ELSA
Iron	3	3/week	1 month	Grab	Lab	O & M
	4	3/week	1 month	Grab	Lab	O & M
Metals*	10	1/month	1 month	24 hr comp.	Lab	ELSA
Cyanide	10	1/month	1 month	24 hr comp.	Lab	ELSA
TSS	4	1/week	1 month	Grab	Lab	O & M
	5	1/week	1 month	Grab	Lab	O & M
	6	1/week	1 month	Grab	Lab	O & M
	10	1/month	1 month	24 hr comp.	Lab	ELSA
VOA	1	Daily	1 month	Grab	GC	O & M
	7	Daily	1 month	Grab	GC	O & M
	8	Daily	1 month	Grab	GC	O & M
	10	Daily	1 month	Grab	GC	O & M
VOA	1	1/week	1 month	Grab	Lab	O & M
	7	1/week	1 month	Grab	Lab	O & M
	8	1/week	1 month	Grab	Lab	O & M
	10	1/week	1 month	Grab	Lab	O & M
TTO	10	1/month	1 month	24 hr comp.	Lab	ELSA

Sampling Point Key:

1. Influent (Pre-Process, Pre-Equalization Tank)
2. Equalization Tank
3. Clarifier
4. Pre-Sand Filter (Post pH Adjustment)
5. Pre-Bag Filter
6. Pre-Carbon Filter
7. Post Carbon Unit One
8. Post Carbon Unit Two
9. Discharge Tank
10. Effluent

* Metals List - Antimony, Arsenic, Barium, Beryllium, Cadmium, Chromium, Copper, Iron, Lead, Mercury, Nickel, Selenium, Silver, Thallium, Zinc.

APPENDIX B

PROPOSED CARBON UNIT CONFIGURATION SCHEDULE

NAWC - Trenton
Proposed Carbon Unit Configuration Schedule

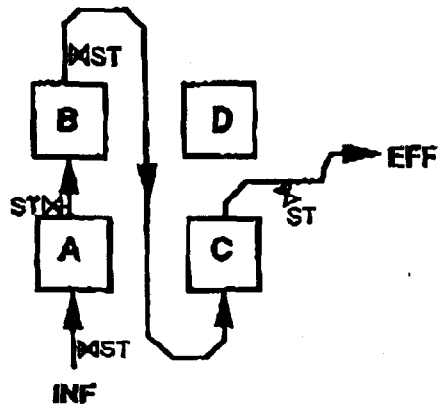

Initial and when Unit D needs change out. Begin with start-up in this configuration. When Unit A unit has breakthrough go to configuration 2.

1

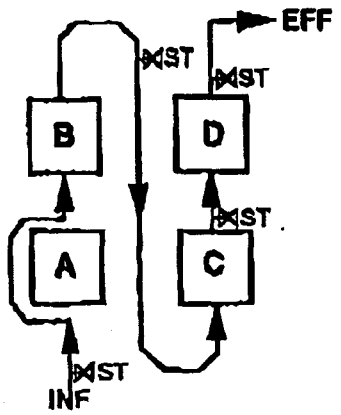

When Unit A needs change out. When Unit B has breakthrough, go to configuration 3.

2

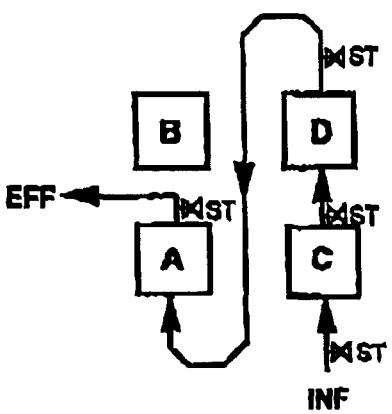

When Unit B needs change out. When Unit C has breakthrough go to configuration 4.

3

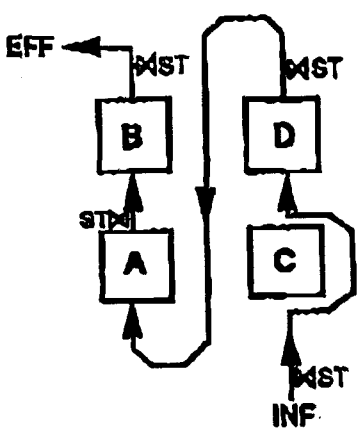

When Unit C needs change out. When Unit D has breakthrough, go to configuration 1.

4

ST : Sampling Tap

1.0 INTRODUCTION

This manual provides descriptive operation and maintenance information for the interim groundwater remediation system at the Naval Air Warfare Center (NAWC) site in Trenton, New Jersey. The site is located in a mixed residential and industrial section of New Jersey at 1440 Parkway Avenue in West Trenton. Its primary purpose is the removal of organic solvents from the contaminated aquifer preventing them from leaching to the storm sewer and ultimately surface waterways. The project was funded through the Navy's Atlantic Division (LANTDIV) Remedial Action Contractor (RAC) Contract No. N62470-93-D-3032, Delivery Order No. 0049. OHM Remediation Services Corp. (OHM) was contracted to construct and operate the groundwater treatment system.

A complete set of as-built drawings and the Site-Specific Health and Safety Plan are maintained at the treatment plant for reference by operation and maintenance (O&M) personnel. The drawings kept at the plant include process flow diagrams (PFDs) and piping and instrument diagrams (P&IDs), as well as electrical details and general plant construction details.

1.1 BACKGROUND

The NAWC Trenton site is located immediately south of the Trenton-Mercer Airport in West Trenton, New Jersey. The aquifer underlying the site is contaminated with trichloroethylene, 1,2-dichloroethylene, and vinyl chloride. All of these contaminants are dense non-aqueous phase liquids (DNAPLs). The NAWC Trenton facility is currently proceeding through Comprehensive Environmental Response, Compensation, and Liability Act (CERCLA) process. However, there is an immediate need for aquifer/contaminant control in the southwest corner of the facility, as contaminants have been detected in the local stormwater discharge. This discharge ultimately flows to the Delaware River. In order to expedite response to this problem, the Navy's Northern Division (NORTHDIV) worked with LANTDIV to provide funding to OHM under the LANTDIV RAC contract to complete system design, construct the treatment system, and operate and maintain the system for up to one year. This O&M manual is for the interim remedial action groundwater treatment system, which came to be through the actions detailed above.

As-built drawings of the NAWC Trenton Interim Remedial Treatment System are maintained in the treatment system building. Within this set of drawings is a site plan showing the location of existing buildings, tanks, roads, paving, and fencing.

1.2 PERMIT COMPLIANCE - WATER DISCHARGE

Groundwater derived from the NAWC Trenton site is to be treated to meet discharge criteria as established by the receiving Publicly-Owned Treatment Works (POTW), which is the Ewing-Lawrence Sewerage Authority (ESLA). A copy of the permit requirements (ELSA letter dated November 8, 1996) is provided at the end of this chapter. Samples of water to be discharged (treated water) are collected from the sample tap located on the discharge pump discharge line just prior to the effluent flow meter.

1.2.1 Chemical Specific Testing Requirements

In order to meet the ELSA discharge criteria, analyses must be performed in accordance with N.J.A.C. 7:14A-2.5(a)12.ii using one of the available methods with sufficient sensitivity to detect the required effluent limitation. This section of N.J.A.C. 7:14A (New Jersey Pollution Discharge Elimination System Rules) states that the permitee shall perform all analyses in accordance with the analytical test procedures approved under

in the laboratory and for laboratory spikes. Normally, 10 percent of the samples should be duplicates.

Split Samples: Samples that are split with the client or a regulatory agency for independent analysis by another laboratory. Care must be taken to assure accurate splitting. Because the integrity of samples for volatiles may be compromised by the handling involved in physically splitting them, duplicates should be used instead of splitting these samples.

Document Control/Chain-of-Custody: As previously mentioned, strict adherence to document- and data-control procedures are essential components of a quality QC/QC plan.

1.3 PERMIT COMPLIANCE - AIR EMISSIONS

Discharge/emissions from the vapor treatment system must comply with the conditions provided in the plant air discharge permit dated May 22, 1996. A copy of the air permit may be found at the end of this chapter. No air sampling is required to monitor the system. A carbon saturation indicator (see Appendix Q) has been provided with each vapor phase carbon canister. This unit will indicate when the carbon has been exhausted and must be replaced.

1.4 OPERATIONAL SAMPLING AND QUALITY CONTROL

1.4.1 Startup Sampling of Treatment System

Sample locations for wastewater analysis, and the scheduled test parameters at each location, are given below for startup testing.

TREATMENT SYSTEM STAGE	TEST PARAMETER(S)	PID PROCESS POINT ID#	FREQUENCY	ANALYZED BY
Influent	pH	Influent Tank Indicator	4/shift	
	pH Calibration	Out of Tank	1/day	
	DCE	01	1/shift	
	TCE	01	1/shift	
	Vinyl Chloride	01	1/shift	
	Iron	01	1/shift	
Clarifier	Fe	02	1/shift	
Effluent	pH	02	4/shift	
Carbon Filter	pH	03	2/shift	
No. 1, Effluent	Fe	03	4/shift	
	DCE	03	4/shift	
	TCE	03	2/shift	
	Vinyl Chloride	03	2/shift	
Carbon Filter	pH	06	2/shift	
No. 2, Final Effluent	Fe	06	4/shift	
	DCE	06	4/shift	
	TCE	06	2/shift	
	Vinyl Chloride	06	2/shift	

PERMIT REPORTING FOR CONCENTRATION VALUES

ND Values

Reporting of ND is not permissible. If the laboratory reports that the pollutant is at a ND level, the permittee shall report less than (<) the analytical detection level which the laboratory reported for that analysis. For example, if the laboratory data looks like this:

	Result	Analytical Detection Level	
Benzene	ND	<10 ug/l	REPORT <10 ug/l

All directions given below for the detected but not quantified case also apply to the non-detectable case, since it is reported as < the analytical detection level.

Reporting Maximum Values for Concentration

1. If the analytical values are all detected and quantified, report the actual maximum value. For example:

   One Month of Lab Data (ug/l)
   29, 102, 48, 63 — REPORT 102 ug/l as the maximum

2. If the analytical values are all detected but not quantified or non-detectable, report less than (<) the least sensitive reported analytical detection level of the laboratory for the data set. For example:

   One Month of Lab Data (ug/l)
   <17, <12, <10, <10 — REPORT <17 ug/l as the maximum

3. If some analytical values are detected and quantified and some analytical values are detected but not quantified or non-detectable, report the largest quantified value as the maximum. For example:

   One Month of Lab Data (ug/l)
   10, <15, 20, <25 — REPORT 20 ug/l as the maximum

Reporting Monthly Average Values for Concentration

1. If the analytical values are all detected and quantified, average all values and report this number. For example:

   One Month of Lab Data (ug/l)
   20, 80, 60, 40 — REPORT 50 ug/l as the average

2. If all analytical values are detected but not quantified or non-detectable, report less than (<) the least sensitive of the reported analytical detection levels achieved by the laboratory. For example:

   One Month of Lab Data (ug/l)
   <17, <12, <10, <10 — REPORT <17 ug/l as the average

3. If some analytical values are detected and quantified and some values are detected but not quantified or non-detectable, for purposes of calculating the average substitute one half the analytical detection level for all values reported as less than the laboratory's reported analytical detection level and then report the calculated average. For example:

One Month of Lab Data (ug/l)	
50, ND (<10), 35, <20	REPORT 25 ug/l as the average

Reporting for Total Toxic Organics (TTO):

Despite the fact that reporting of ND is not permissible, it will be allowed for reporting of TTO. The reasoning behind this is simple. Let us say that there are "x" number of TTOs monitored, and all were reported as ND with <10 µg/L for each compound. If "x" was greater than 10 (say for sample's sake 11), then the TTO would be reported (under the non-permissible ND approach) as <110 µg/L because technically speaking, any of the TTO compounds could have been present at just under 10 µg//L. The dilemma here is that if TTO is >100 µg/L, you have exceeded this discharge criteria, and <110 µg/L reported for the TTO would imply that an exceedance occurred.

Therefore, for TTO reporting (because it is additive of various compounds), a reporting of ND will be allowed (if all compounds were less than the detection limit) and will otherwise be the summation of the quantities detected.

1.2.4 Documentation Procedures

Accurate documentation of all sample procedures is critical to the sampling process. Types of documents which are considered essential and must be accounted for are notes, maps, drawings, photographs, safety plans, quality assurance plans, log books, data sheets, reports, etc. These link the sample with the project, sampler, time, location, procedures, changes to the work plan, sample history, transfer to the laboratory, and insures tamper-free transit.

Data, calibration, and maintenance records, samples, and documents must be accounted for and retrievable at any time during an investigation. Chain-of-custody records are necessary to document the sample identity, handling, and shipping procedures.

1.2.5 Quality Assurance/Quality Control (QA/QC)

Please note that established QA/QC procedures are in place. The two major concerns of the QA/QC plan are QA samples and document control (e.g., chain-of-custody). QA samples required include:

- Trip Blanks: Used to verify the cleanliness of the sample containers. One trip blank is used for each day that samples are collected for analysis of volatile organic compounds.

- Equipment (Field) Blanks: Used to verify the cleanliness of the sampling equipment. The piece of equipment in question is used to take a sample of distilled or deionized water. One analyte per piece of equipment per day is recommended.

- Duplicates: Essentially identical samples collected at the same time, in the same way, and contained, preserved, and transported in the same manner. They are used to verify the reproducibility of the sampling procedure. They are necessary to cover breakage and accidents

in the laboratory and for laboratory spikes. Normally, 10 percent of the samples should be duplicates.

- Split Samples: Samples that are split with the client or a regulatory agency for independent analysis by another laboratory. Care must be taken to assure accurate splitting. Because the integrity of samples for volatiles may be compromised by the handling involved in physically splitting them, duplicates should be used instead of splitting these samples.

- Document Control/Chain-of-Custody: As previously mentioned, strict adherence to document- and data-control procedures are essential components of a quality QA/QC plan.

1.3 PERMIT COMPLIANCE - AIR EMISSIONS

Discharge/emissions from the vapor treatment system must comply with the conditions provided in the plant air discharge permit dated June 23, 1995. A copy of the air permit may be found at the end of this chapter. No air sampling is required to monitor the system. A carbon saturation indicator (see Appendix Q) has been provided with each vapor phase carbon canister. This unit will indicate when the carbon has been exhausted and must be replaced.

1.4 OPERATIONAL SAMPLING AND QUALITY CONTROL

1.4.1 Startup Sampling of Treatment System

Sample locations for wastewater analysis, and the scheduled test parameters at each location, are given below for startup testing:

TREATMENT SYSTEM STAGE	TEST PARAMETER(S)	PID PROCESS POINT ID#	FREQUENCY	ANALYZED BY
Influent	pH	Influent Tank Indicator	4/shift	
	pH Calibration	Out of Tank	1/day	
	DCE	01	1/shift	
	TCE	01	1/shift	
	Vinyl Chloride	01	1/shift	
	Iron	01	1/shift	
Clarifier Effluent	Fe	02	1/shift	
	pH	02	4/shift	
Carbon Filter No. 1, Effluent	pH	03	2/shift	
	Fe	03	4/shift	
	DCE	03	4/shift	
	TCE	03	2/shift	
	Vinyl Chloride	03	2/shift	
Carbon Filter No. 4, Final Effluent	pH	06	2/shift	
	Fe	06	4/shift	
	DCE	06	4/shift	
	TCE	06	2/shift	
	Vinyl Chloride	06	2/shift	

1.4.2 Sampling Method

During sampling, the flow of the wastewater is directed out of the treatment system flow through exit ports located at each of the sample locations. The wastewater is collected in pre-cleaned jars and stirred well to assure a representative sample. This procedure is repeated for each sampling location.

The sampling frequency of each sample location is as indicated in Section 1.4.1. The time of sampling at each location must be noted in the log book. Any deviation from the final sample plan should be documented. The samples are to be analyzed for the parameters indicated for each location.

1.5 SYSTEM OPERATION

The Interim Remedial Action Groundwater Treatment System is designed to receive contaminated groundwater from the bedrock aquifer beneath the NAWC Trenton site. The primary pumping well is MW-15BR.

The treatment system is designed to process groundwater at a rate of 15 to 25 gpm. A description of the treatment process presented in Process Flow Diagram P-1 follows.

1.5.1 Extraction Well

One extraction well provides the primary source of groundwater from the bedrock aquifer underlying the site. The extraction well is located just to the south and east of the treatment plant (see Drawing C-1).

The extraction well is equipped with a submersible well pump capable of delivering 25 gallons per minute (gpm) of groundwater to the system. The well is equipped with a continuous level monitor whose 4-20 mA signal will be used to start and stop the pump as required. The discharge of each pump is routed to the treatment building, through the influent flowmeter, and into the Equalization Tank.

1.5.2 Indoor Collection Sump

The indoor collection sump is located within the treatment building and receives any water flows resulting from leaks or spills from the process. The sump will also collect any drainage from process units during maintenance operations.

The indoor sump is equipped with one submersible pump. The sump is equipped with a level switch which activates the sump pump on detection of high water level and deactivates the pump on detection of low water level.

Flow from the indoor sump is routed directly to the Equalization Tank inlet where it combines with flow from the extraction well.

1.5.3 Incoming Groundwater Flow Control

Flow from the extraction well is set manually utilizing a throttling valve at the well head. The flow rate is normally set at approximately 15 gpm; however, a flow rate of 25 gpm may be achieved. As this is the *interim* groundwater treatment system, detailed automation has been avoided. Therefore, in order to adjust the influent flow rate, two people are required. One person must be at the extraction well to adjust the pump discharge valve. The second person must stand by the treatment building to monitor the influent meter and

calculate flow rate. Two hand-held radios must be used for this task. Once the flow is set, no further adjustment should be necessary.

1.5.4 Equalization Tank

The Equalization Tank is a 4,000 gallon tank provided within the system to equalize flow and contaminant concentration to the downstream process units. The tank is operated at three-quarters full to allow adequate equalization of incoming groundwater while providing adequate space to receive backwash water or treatment building sump discharge water. The Equalization Tank is equipped with a pH probe and indicator, three level probes (low, high, and high-high), and two submersible pumps (one for recirculation/mixing and one for discharge to the treatment system).

Incoming flow to the tank consists of groundwater from the extraction well and, intermittently, flow from either carbon filter or sand filter backwash waste or building sump discharge. The Equalization Tank is also used for pH adjustment. A 1% caustic (sodium hydroxide - NaOH) solution is injected directly into the Equalization Tank by the Caustic Feed Pump. Feedback from the Equalization Tank pH probe is used to control the caustic feed rate. The Equalization Tank is equipped with a Recirculation Pump, which continually mixes the influent stream and caustic within the tank. The Equalization Tank is also equipped with a submersible Equalization Tank Discharge Pump, which discharges directly to the Clarifier Unit. The discharge pump is activated by a "high" level in the Equalization Tank and deactivated by a "low" level in the tank. It will also be deactivated if the Programmable Logic Controller (PLC) receives a "high-high" level alarm from the 1,000-gallon pH Adjustment Tank located downstream of the Clarifier Unit. A "high-high" level alarm in the Equalization Tank will deactivate the Extraction Well Pump through the PLC.

1.5.5 Clarifier Unit

The Clarifier Unit treats the incoming water for removal of metal contaminants via precipitation and flocculation. The incoming flow is combined with a chemical flocculating agent (Magnifloc 1883A anionic flocculant) prior to entering the Clarifier Unit. The flocculant is injected directly into the clarifier inlet line.

The 0.5% flocculant solution is mixed with the discharge flow from the Equalization Tank prior to entry into the Clarifier Unit's flash mix chamber. The flocculant is supplied via the Flocculant (Polymer) Metering Pump, which draws from the Polymer Solution/Mix Tank. Flocculant addition is regulated by both the PLC and manual adjustment of the volumetric stroke on the Polymer Metering Pump.

Within the Clarifier Unit, the incoming flow is passed through a flocculating chamber where it is allowed to slow mix, build a strengthened floc, and then proceed to an inclined plate separator section for settling of solids. The flow passes through the inclined plates where the suspended floc agglomerates and settles to the bottom of the unit into the sludge collection chamber. The metals-containing sludge is pumped intermittently by the PLC from the bottom of the Clarifier Unit via the Clarifier Sludge Pump to 55 gallon drums for off-site disposal.

Clarified water overflows the discharge weir of the Clarifier Unit into the pH Adjustment Tank. The pH Adjustment Tank provides thirty minutes of retention time, at 25 gpm flow, for control of the feed forward flow to the subsequent process units. The pH Adjustment Tank is equipped with a pH probe and indicator, three level probes (low, high, and high-high), and two submersible pumps (one for recirculation/mixing and one for discharge to the treatment system). An 0.2 N sulfuric acid (H_2SO_4) solution is injected directly into the pH Adjustment Tank by the Acid Metering Pump. Water is transferred from the pH Adjustment Tank via the pH Adjustment Tank Discharge Pump to the Sand Filter and through the remainder of the treatment system.

1.5.6 Sand Filter

The Sand Filter is provided to remove solids which did not settle in the Clarifier Unit. The Sand Filter has valving to allow for manual backwash. The backwash flow is routed to the Equalization Tank. The filtered effluent from the Sand Filter flows through a Dual Bag Filter Unit for removal of solid particles greater than 5 microns in size.

1.5.7 Dual Bag Filter Unit

The Dual Bag Filter Unit is equipped with an automatic three-way valve. If the pressure drop across the bag filter in service becomes too high, this valve will automatically switch incoming flow through the second filter unit and activate an alarm to let personnel know that the first bag must be changed out.

1.5.8 Liquid Phase Carbon Adsorption Units

The final treatment step in the process system is that of liquid phase carbon adsorption. Four Liquid Phase Carbon Adsorption Units are provided in series to remove liquid phase adsorbable organic and inorganic constituents. These adsorption units are protected from suspended solids fouling by the upstream Sand Filter and Dual Bag Filter Unit.

The Carbon Filters are arranged in series to allow maximum removal of contaminants as well as utilization of carbon. Monitoring of accumulated flow through the first carbon unit allows determination (based on prior sampling and unit performance) of when the carbon bed has become exhausted. When the first unit's carbon has become exhausted (as indicated by breakthrough of vinyl chloride), the unit will remain in service for continued removal of DCE and TCE, but carbon changeout will be scheduled. Spent carbon will replaced with regenerated carbon. The lead cell will now become the last cell in the series, and the system will run with four cells again. It is not anticipated that system shutdown will be required for carbon changeout.

The clean water product from the system is accumulated in the Discharge/Backwash Tank for ultimate discharge to the ELSA sanitary sewer.

1.5.9 Discharge/Backwash Tank

The Discharge/Backwash Tank is used to store initial startup product water until verified acceptable for discharge. The tank is also used to store treated water for use as backwash water to the Carbon Filters and the Sand Filter via a submersible Backwash Pump (located within the Discharge/Backwash Tank) or water may be returned to the Equalization Tank via the Backwash Pump if the treated water quality does not meet the discharge criteria.

During normal operation, the treated clean water product flows through the Discharge/Backwash Tank and is subsequently discharged to the ELSA sanitary sewer via the submersible Discharge Pump located within the Discharge/Backwash Tank. Pumpout rate from this tank is regulated based on level control and the call for backwash water to the filter units.

1.5.10 Vent System

A vent system has been provided to control volatile organic emissions from sources with high generation potential. The system consists of process vent piping and a Vapor Phase Carbon Adsorber Unit. The Vapor Phase Carbon Adsorber Unit is designed to remove organic constituents to acceptable levels prior to the air being released to the atmosphere. Vents from the Equalization Tank, the Clarifier, and the pH

Adjustment Tank are piped together and terminate at a 55-gallon vapor phase carbon canister. The carbon canister is monitored for breakthrough and discharged to the building exterior.

1.5.11 Compressed Air Supply

Compressed air is supplied for process use as well as instrument use at a delivery pressure of 60-85 psi. The system consists of an air compressor, air receiver, and oil filter for all compressed air flow.

Process air is utilized by the Clarifier Sludge Pump and the sludge pump suction and discharge control valves.

1.5.12 Programmable Logic Controller (PLC)

A PLC unit has been provided with the NAWC Trenton treatment system to provide unattended operation and control of the system. The PLC controls chemical feed rates, cycles the Clarifier Sludge Pump, controls pump operations, and logs operation data (e.g., influent flow, effluent flow, tank pH values, etc.). A detailed description of PLC operation is provided in Chapter 2.0.

1.5.13 Gas Chromatograph (GC)

A GC unit has also been provided with the treatment system. The GC unit is to be used for frequent system monitoring and has been set up for analysis of water for the presence of DCE, TCE and vinyl chloride.

1.6 ALARMS

The treatment system does not include audible alarms, but does include logic to maintain safe operations. Depending on the nature of the process logic signal, one of two course of action will be taken. Should the logic signal represent a temporary and correctable condition, the process logic will cause a temporary shutdown of one or more pieces of the treatment system, and allow normal operation to resume once the signal returns to normal. Should the process logic signal represent an unacceptable mode of operations, an orderly system shutdown is initiated, which will require a manual system restart. Logic signals resulting in system shutdown will activate the outside red flashing beacon and activate the process autodialer.

1.6.1 Temporary Shutdown Signals

- Recovery Well Low-Low Level: Temporarily keeps the well submersible pump from operating.
- Equalization Tank Lower Level: The Equalization Tank Recirculation Pump stops operating should the tank level drop below the level of the low level electrode.
- Adjustment Tank High-High Level: Temporarily keeps the Equalization Tank Transfer Pump from operating.
- Adjustment Tank Low Level: The Adjustment Tank Recirculation Pump stops operating should the tank level drop below the level of the low level electrode.
- Discharge/Backwash Tank High-High Level: Temporarily keeps the Adjustment Tank Transfer Pump from operating.

1.6.2 Shutdown Signals Requiring Manual System Re-Start

- Equalization Tank High-High Level
- Building Sump High-High Level
- Sand Filter High Pressure Differential

- Bag Filter High Pressure Differential
- Carbon Vessel High Pressure Differential - Each of the four liquid phase granular activated carbon vessels are fitted with a pressure differential switch. If any one or more switches sense a high differential pressure, this interlock is engaged.
- High Clean Water pH (>10.0 su)
- Low Clean Water pH (<6.0 su)

1.7 TROUBLESHOOTING/MAINTENANCE

When responding to the autodialer notification that the system has shut down, the cause for shutdown must be established. Before pressing the reset button on the process control panel, check the following items:

- Equalization Tank Level
- Building Sump Level
- Discharge/Backwash pH

PROBLEM: If a high liquid level exists in the building sump, the cause for the process shutdown has been identified.

RESOLUTION: If the liquid level in the building sump is high, turn all pump switches on the process panel to off. The press the System Reset button. The System Run light will energize. Remove the sump grate, and remove the sump pump for inspection and problem resolution. Replace the sump pump and sump grate. Return all pump switches to the Auto position.

PROBLEM: If a high liquid level exists in the Equalization Tank, the cause for the process shutdown has been identified.

RESOLUTION: If the liquid level in the Equalization Tank was the cause for system shutdown, turn the well pump switch to off, and then reset the system. The System Run light will energize. Examine the discharge line to the Clarifier and the pH Adjustment Tank for a line block or other obstruction. Check the position of the discharge globe valves on the discharge line at the top of the Equalization Tank for the proper position. If the discharge lines are okay, then examine the well pump line to the Equalization Tank (or other sources into the Equalization Tank) to see if the filling rate exceeds the treatment system capacity.

PROBLEM: If the pH in the Discharge/Backwash Tank is above 10 or below 6 standard units, the process shutdown was caused by this interlock.

RESOLUTION: Add a small quantity of diluted sodium hydroxide to the clean water tank if the treated water pH is below 6 standard units. Add a small quantity of diluted sulfuric acid to the clean water tank if the treated water pH is above 10 standard units. Repeat as necessary until the pH returns to within the range of 6 to 10 standard units. Press the system reset switch, returning the system to automatic operation.

If the process shutdown was caused by a high pressure differential in the Sand Filter, Bag Filter, or a Carbon Vessel, the process shutdown will be less obvious, because the system will depressurize on shutdown. If the process shutdown was not caused by high tank level or the clean water pH, press the system reset switch to restart the system. Closely monitor the treatment system pressure profile to identify which vessel pressure drop triggered the system shutdown. Each pressure differential switch was calibrated to change state at 18 psid. After identifying the problem vessel, configure the process for the vessel backwash (if sand filter or a carbon vessel). If the system shutdown was caused by a high pressure drop across a Bag Filter Unit, change the filter bag and resume normal operation.

NOTE: The Backwash Pump will start only if the following conditions are true:

- The Equalization Tank level is below the low level probe.
- The Discharge/Backwash Tank level is at or above the high level probe.
- The Well Pump is OFF.

The Backwash Pump will stop when the Equalization Tank level reaches the high-high level probe or the Discharge/Backwash Tank level decreases to its low level probe position.

1.8 SAFETY

A copy of the complete Site-Specific Health and Safety Plan (HASP) is maintained as a separate volume from this O&M manual in the treatment building. Though treatment system safety procedures are presented below, personnel working at the NAWC Trenton site are required to review the site-specific HASP.

1.8.1 General

The treatment system includes equipment which start and stop automatically, process control for the addition of chemicals for treatment, and a significant amount of power and control wiring. Improper operation and maintenance methods can result in unsafe conditions for both the operators and the treatment equipment.

In addition to the hazards and precautions described in this section, common industrial hazards are present in the system and all common industrial safety precautions should, therefore, be followed.

WARNING: **Anyone who operates or maintains the system or equipment must be aware of the hazards presented by the treatment chemicals used with the system as well as common industrial safety hazards and other safety and health hazards that are present in wastewater treatment facilities. Safety precautions appropriate for all of these hazards must be taken. Failure to do so may result in serious injury, illness or death.**

1.8.2 Electrical Safety

Only a licensed electrician or otherwise certified electrical technician may work on system electrical circuits. Care should be taken when working in the panel to make sure which circuits are active and which are not. Except for troubleshooting purposes, no work should be performed in any panel unless all of the power supplies have been shut off and locked out at the source.

The system contains many pumps, motors and pieces of equipment, which may start and stop automatically. Care should be exercised when in the vicinity of the system equipment. When maintenance work is to be performed on any motor, the power supply to that motor should be shut off and locked out at the motor control center and at the local/hand switch as applicable.

1.8.3 Vessel Entry

Entry into vessels may become necessary for the performance of maintenance. Vessel entry is always a safety concern because of the possible presence of a dangerous atmosphere within a small enclosed space.

The atmosphere inside a vessel must be analyzed before entry into that vessel. If the oxygen concentration in this atmosphere exceeds 21%, entry may not be made because of the high rate of combustion

that would result if a fire occurred. The vessel should be thoroughly purged until its atmosphere contains between 19 and 21% oxygen before it is entered. Use of a continuous oxygen monitor is strongly recommended at all times when anyone is inside a vessel.

The atmosphere in a vessel may contain insufficient oxygen to support life. If a vessel contains less than 19% oxygen, entry into it should be made only by persons that are wearing an operating self-contained breathing apparatus or an operating breathing air mask.

The atmosphere in a vessel may contain toxic material. Do not enter toxic atmospheres without an operating self-contained breathing apparatus or an operating breathing air mask and protective equipment appropriate for the toxic material that is present.

Most vessels are constructed of electrically conductive material that is grounded, providing a potential path for a ground fault. If welding is to be performed in a vessel, the welding machine must be securely grounded directly to the vessel. Only low voltage lights with heavy duty guards should be used for lighting in vessels.

1.8.4 Chemical Feed Systems

Chemical feed systems are provided as part of the treatment system. The caustic (sodium hydroxide) system automatically adds chemicals as required to maintain the system pH within the prescribed operating limits. A flocculant feed system is also provided for optimal Clarifier performance. The following sections describe the hazards presented by the materials used in the chemical feed systems and the precautions that must be taken because of these hazards. Refer to the material safety data sheets (MSDS) included at the end of this chapter and maintained at the treatment plant for additional safety information on the various chemicals.

1.8.4.1 Sodium Hydroxide

Sodium hydroxide is also known as caustic soda or lye. It is highly corrosive on all body tissues and highly irritating. Avoid any bodily contact with it, as this contact may result in severe burns, ulceration, and dermatitis. Always wear protective clothing, including plastic overalls, rubber gloves, and goggles, when working with sodium hydroxide. If bodily contact occurs, remove all contaminated clothing immediately and flush the body thoroughly under a deluge water shower. Irrigate eyes with warm water.

Store sodium hydroxide in a dry place and protect it from contact with moisture, acids, metals, and oxidizers.

Although sodium hydroxide is non-combustible in its solid form, it can generate sufficient heat to ignite combustibles if it contacts water or moisture. If it contacts metals, it may release hydrogen gas, a highly flammable substance.

1.8.4.2 Sulfuric Acid

Sulfuric acid can cause severe burns and ulceration to all body tissues. Inhalation may irritate the lungs and cause coughing, discomfort, difficult breathing, and severe shortness of breath that requires prompt medical attention. Ingestion of liquid sulfuric acid may cause severe burns of the mouth and esophagus. Skin or eye contact may result in eye corrosion with corneal or conjunctival ulceration or skin burns and ulceration.

Avoid bodily contact with sulfuric acid. Wear appropriate protective clothing, including chemical splash goggles, acid-proof gauntlet gloves, apron, and boots; and woolen, acrylic, or polyester fiber clothing.

In an emergency or during a possibility of considerable exposure, wear a complete acid suit. Avoid inhaling or ingesting acid vapor, mist, and liquid.

If bodily contact with sulfuric acid occurs, immediately flush skin and eyes with plenty of water for at least 15 minutes while removing contaminated clothing and shoes. Obtain prompt medical attention. Wash contaminated clothing before reusing it.

If acid vapor is inhaled, remove the victim to fresh air or have him or her lie down and remain quiet. If breathing has stopped, administer artificial respiration. If breathing is difficult, oxygen may need to be administered. Obtain prompt medical attention.

If acid is swallowed, do not induce vomiting. Give the victim large quantities of water to drink if he or she is conscious. (Do not give anything by mouth to an unconscious person). Do not give the victim carbonates. Obtain prompt medical attention.

Whenever mixing acid and water, add the acid to the water, and not vice versa. If water is added to acid, a violent reaction may occur, splashing acid onto the person who is mixing them.

1.8.4.3 High Molecular Weight Anionic Emulsion Polymer Flocculant (Magnifloc 1883A)

Though polymer flocculants are not particularly hazardous, skin or eye contact should be avoided and may result in irritation. If bodily contact occurs, remove contaminated clothing immediately, wipe excess polymer from skin before flushing thoroughly under a deluge water shower. Irrigate eyes with warm water. Due to the chemistry of polymers, large volumes of water are required.

Emulsion polymers and their solution are very slippery. Spills will result in slip hazards. All polymer spills must be cleaned up immediately. For spills, wipe up and collect as much of the spill as possible before hosing the area down with large amounts of water. Emulsion polymers will dry to a solid which will become slippery again when in contact with water.

Store polymer flocculants in a dry location and avoid freezing. Emulsion polymer is a mixture of dry polymer, water, and mineral oil. Over a period of months the polymer component will begin to settle leaving an oil layer on top. Occasional mixing of polymer drums is recommended.

1.8.5 Process Water Safety

Untreated process water contains low levels of hazardous heavy metals. Avoid bodily contact with untreated or partially treated process water. If skin contact with process water occurs, wash contaminated areas with soap and water.

Due to the range of analytical results encountered during site studies and initial treatment system O&M, an operator should consult the most recent influent process water analysis for an accurate indication of the contaminants present and their levels.

The organics expected to be present at the highest concentrations are 1,2-dichloroethene, trichloroethene, and vinyl chloride. These organics, among others present, are volatile. They are removed from the process water primarily by the liquid phase carbon. As a result of their volatility, these constituents will also evaporate from the process water in the system tanks and vessels. The tank venting system draws vapors off the closed top tanks and vessels and sends them to the vapor phase carbon. To reduce the possibility of hazardous levels of VOCs present in the treatment building, vent piping should not be disconnected until

process tanks tied into the system are pumped down as much as possible. Building exhaust fans should be operating at all times, and most especially when vent line work is in progress.

Some of the process tanks and equipment do not include vented closed tops. These pieces of equipment are not expected to result in significant levels of VOCs in the treatment building.

1.8.6 Flammable Organics

When treating process water containing volatile and flammable organics such as vinyl chloride, DCE, and TCE, caution must be taken to assure that the atmosphere in the building and in the process equipment does not reach the lower explosive limit (LEL). The process equipment is not rated for and must not be operated in an atmosphere where an explosion hazard exits.

If the influent VOC level increases or the system sees a slug of highly contaminated water, the ability of the system to treat the water and the possibility of exceeding the LEL must be thoroughly evaluated before treatment is attempted.

Testing to evaluate the treatment building ambient air quality with respect to the LEL should be performed regularly.

1.8.7 Chemical Properties

Tables 1.3, 1.4 and 1.5 located at the end of this chapter contain information regarding contaminants and reagents which may be present in and used in treating the process water.

1.9 MATERIAL SAFETY DATA SHEETS

The material safety data sheets for the following materials may be found at the end of this chapter:

- Vinyl Chloride
- Trichloroethylene/Trichloroethene
- 1,2-Dichloroethene
- Sodium Hydroxide
- Sulfuric Acid
- Magnifloc 1883A Flocculant
- TCE Standard for GC Calibration
- DCE Standard for GC Calibration
- Vinyl Chloride Standard for GC Calibration
- Helium Gas for GC Unit Operation
- Methyl Alcohol for GC Unit Operation
- *Nitric Acid for GC Unit Operation*

1.10 GLOSSARY OF TERMS

PLC - Programmable Logic Controller. The rack mounted GE Fanuc Series 90-30 controller mounted in the control panel. Located in its memory is the program which operates the system.

PC - Personal Laptop Computer. The Epson computer located in the control panel. It is used to download process data from the PLC.

PID Loop - Proportional, Integral, Derivative Loop. A process control function used to maintain a process variable such as flow to a particular setpoint by varying an output to a piece of instrumentation such as a pump controller.

I/O - Inputs/outputs. The digital (on/off) and analog inputs and outputs from the Programmable Logic Controller input and output cards.

1.11 TREATMENT SYSTEM STAFFING AND QUALIFICATIONS

Staffing for operation and maintenance of the CWTS will include the following (qualifications noted):

- Project Manager/Plant Superintendent (Water/Wastewater/Process Engineer with minimum N-2 license)
- Operations Supervisor (Wastewater Treatment Plant Operational Experience)
- Maintenance Supervisor (Maintenance Experience with Major Plant Equipment)
- Licensed Operators (Possess N-class Wastewater Treatment System License)
- Trainees (OSHA 40-hour Training)
- Certified Industrial Hygienist (Certified or Qualified Industrial Hygienist)
- Site Safety Officer (OSHA 40-hour Training)

The responsibilities and duties of the key staff personnel are as follows.

PROJECT MANAGER

- Maintain clear, effective, and up-to-date communications with the NorthDiv and/or NAWC Trenton O&M Project Manager
- Coordinate subcontractors, including their compliance with bid specifications
- Develop and maintain all site-specific plans
- Project planning, control, data management, execution, communications, reporting, change orders, and organization
- Overall oversight of the operation and maintenance of the treatment plant
- Invoice preparation
- Track plant operation costs
- Guide and provide technical oversight for all treatment plant work activities
- Supervise all on-site personnel
- Operate the treatment system such that it meets all effluent discharge requirements
- Prepare monthly DMRs for NAWC Trenton to submit to ELSA
- Develop and implement the treatment system maintenance and QA/QC program
- Supervise daily treatment system activities
- Evaluate licensed operator and trainee performance
- N-2 License (NJDEP Industrial Wastewater Treatment Plant Operator)
- Report violations of discharge parameters to NorthDiv and NAWC Trenton

SUPERVISORS

- Field implementation of daily work activities
- Oversee treatment system personnel
- QA/QC officer
- Final review of daily operation and maintenance log books
- Review work activities for non-conformances and implement corrective action

- Maintain the treatment system performance and maintain system conformance with all applicable surface discharge permit requirements and effluent limitations

LICENSED OPERATORS (Any personnel holding an N-class water treatment plant operator's license)

- Operate the treatment system in a professional and responsible manner
- Perform maintenance tasks including preventive maintenance
- Monitor treatment system performance through the computer control and instrumentation system
- Monitor treatment system performance using analytical analysis
- Handle chemical and sludge, as required
- Complete daily operation and maintenance log books
- Troubleshoot treatment system operational problems
- Maintain plant appearance and safety
- Perform other duties as required by the Plant Superintendent or Supervisor (e.g., sampling)
- Order parts and supplies
- Track plant inventory

TRAINEES

- Operate the treatment system under the supervision of the Licensed Operator
- Perform maintenance tasks including preventative maintenance
- Follow training program directed by the Plant Superintendent
- Perform other duties as required by the Plant Superintendent or Supervisor or Licensed Operator

CERTIFIED INDUSTRIAL HYGIENIST (CIH)

The CIH should be responsible for the contents of the Health and Safety Plan (HASP) and should ensure that the HASP complies with all federal, state and local health and safety requirements. If necessary, the CIH can modify specific aspects of the HASP to adjust for on-site changes that affect safety. The CIH will coordinate with the Site Safety Officer (SSO) on all modifications to the HASP and will be available for consultation when required. The CIH will not necessarily be on site during OHM activities.

SITE SAFETY OFFICER (SSO)

The SSO has responsibility for administering the HASP relative to site activities, and will be in the field full-time while site activities are in progress. The SSO's primary operational responsibilities will be monitoring, including personal and environmental monitoring, personal protective equipment maintenance, and assignment of protection levels. The SSO will be the main contact in any on-site emergency situation. The SSO will direct all field activities involved with safety and be responsible for stopping work when unacceptable health or safety risk exists. The SSO is responsible for assuring that all on-site personnel understand and comply with all safety requirements.

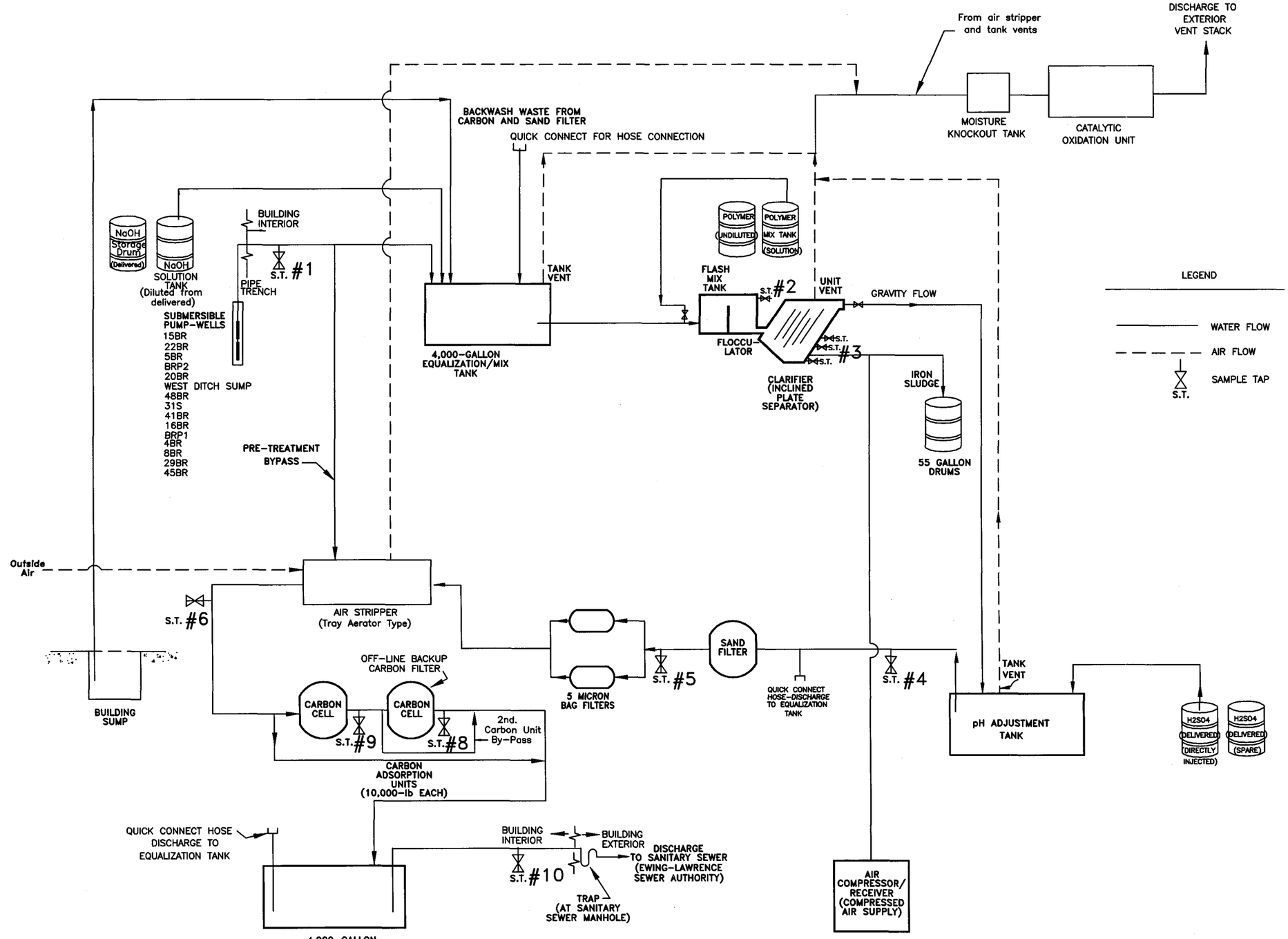

FOSTER WHEELER ENVIRONMENTAL

REV.	DESCRIPTION	PREP BY	DATE	APPRVD

DEPARTMENT OF THE NAVY — NAVAL FACILITIES ENGINEERING COMMAND — PENNSYLVANIA

NORTHERN DIVISION

LESTER

Process Flow Diagram
Groundwater Treatment Building

APPROVED DRK — DATE June 1998 — NORTHDIV FOR COMMANDER, NAVFAC

SEAL AREA

RA AND/OR PE SEAL

SAT TO — DATE

CODE I.D. NO.
SCALE : NTS
SPEC. NO.
CONSTRN. CONTR. NO.
NAVFAC DRAWING NO.
SHEET — OF
SIZE: D — DIS. SH. NO.

DRAWING FILE NAME: trt1new.dwg

DATE CREATED
LATEST CHANGE 6/30/98
CHANGED BY:

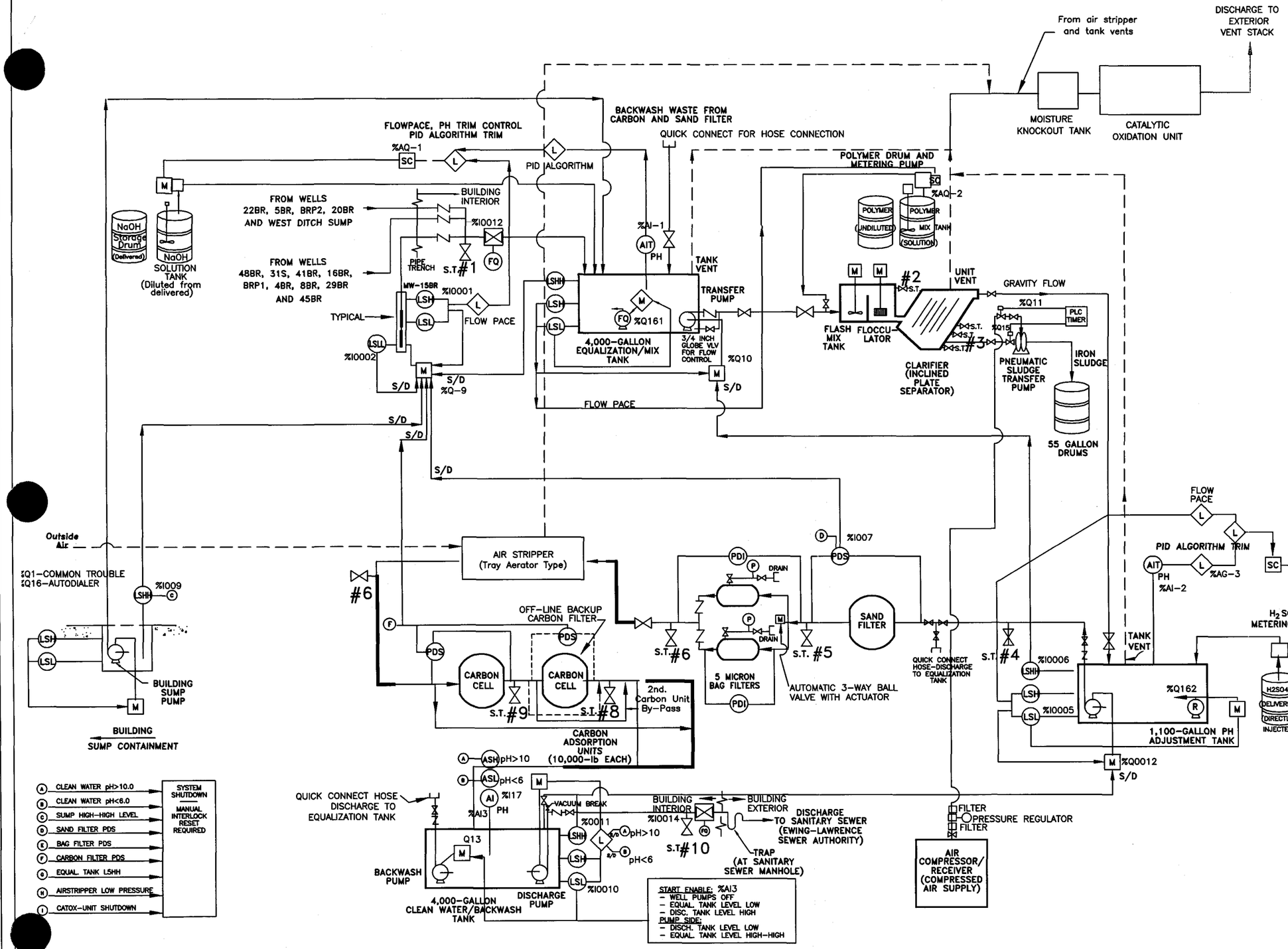
FLOWPACE, PH TRIM CONTROL
PID ALGORITHM TRIM
%AQ-1
PID ALGORITHM
BACKWASH WASTE FROM CARBON AND SAND FILTER
QUICK CONNECT FOR HOSE CONNECTION
From air stripper and tank vents
DISCHARGE TO EXTERIOR VENT STACK
MOISTURE KNOCKOUT TANK
CATALYTIC OXIDATION UNIT
POLYMER DRUM AND METERING PUMP
%AQ-2
POLYMER (UNDILUTED)
POLYMER MIX TANK (SOLUTION)
NaOH Storage Drum (Delivered)
NaOH SOLUTION TANK (Diluted from delivered)
FROM WELLS 22BR, 5BR, BRP2, 20BR AND WEST DITCH SUMP
FROM WELLS 48BR, 31S, 41BR, 16BR, BRP1, 4BR, 8BR, 29BR AND 45BR
BUILDING INTERIOR
%I0012
PIPE TRENCH
S.T.#1
FQ
%AI-1
AIT PH
TANK VENT
TRANSFER PUMP
MW-15BR
%I0001
TYPICAL
FLOW PACE
%I0002
4,000-GALLON EQUALIZATION/MIX TANK
3/4 INCH GLOBE VLV FOR FLOW CONTROL
%Q10
%Q161
S/D
%Q-9
FLOW PACE
FLASH MIX TANK
FLOCCU-LATOR
CLARIFIER (INCLINED PLATE SEPARATOR)
UNIT VENT
GRAVITY FLOW
%Q11
PLC TIMER
%Q15
PNEUMATIC SLUDGE TRANSFER PUMP
IRON SLUDGE
55 GALLON DRUMS
Outside Air
%Q1-COMMON TROUBLE
%Q16-AUTODIALER
%I009
BUILDING SUMP PUMP
BUILDING SUMP CONTAINMENT
AIR STRIPPER (Tray Aerator Type)
#6
OFF-LINE BACKUP CARBON FILTER
CARBON CELL
CARBON CELL
S.T.#9
S.T.#8
2nd. Carbon Unit By-Pass
CARBON ADSORPTION UNITS (10,000-lb EACH)
%I007
DRAIN
5 MICRON BAG FILTERS
S.T.#6
S.T.#5
AUTOMATIC 3-WAY BALL VALVE WITH ACTUATOR
SAND FILTER
QUICK CONNECT HOSE-DISCHARGE TO EQUALIZATION TANK
FLOW PACE
PID ALGORITHM TRIM
%AG-3
%AI-2
Q12
S.T.#4
%I0006
%I0005
TANK VENT
%Q162
1,100-GALLON PH ADJUSTMENT TANK
H2SO4 METERING PUMP
H2SO4 (DELIVERED) (DIRECTLY INJECTED)
H2SO4 (DELIVERED) (SPARE)
%Q0012
S/D
A CLEAN WATER pH>10.0
B CLEAN WATER pH<6.0
C SUMP HIGH-HIGH LEVEL
D SAND FILTER PDS
E BAG FILTER PDS
F CARBON FILTER PDS
G EQUAL. TANK LSHH
H AIRSTRIPPER LOW PRESSURE
I CATOX-UNIT SHUTDOWN
SYSTEM SHUTDOWN
MANUAL INTERLOCK RESET REQUIRED
QUICK CONNECT HOSE DISCHARGE TO EQUALIZATION TANK
%AI3
%I17
pH
%I0011
VACUUM BREAK
BUILDING INTERIOR
%I0014
BUILDING EXTERIOR
DISCHARGE TO SANITARY SEWER (EWING-LAWRENCE SEWER AUTHORITY)
S.T.#10
TRAP (AT SANITARY SEWER MANHOLE)
Q13
BACKWASH PUMP
4,000-GALLON CLEAN WATER/BACKWASH TANK
DISCHARGE PUMP
%I0010
START ENABLE: %AI3
- WELL PUMPS OFF
- EQUAL. TANK LEVEL LOW
- DISC. TANK LEVEL HIGH
PUMP SIDE:
- DISCH. TANK LEVEL LOW
- EQUAL. TANK LEVEL HIGH-HIGH
FILTER
PRESSURE REGULATOR
FILTER
AIR COMPRESSOR/ RECEIVER (COMPRESSED AIR SUPPLY)
LEGEND
SC VARIABLE SPEED MOTOR
M ON/OFF MOTOR
L LOGIC
LS LEVEL SWITCH LO, HIGH, HIGH-HIGH, LOW-LOW
AIT PH ANALYZER-INDICATING-TRANSMITTER
AI PH ANALYZER-INDICATING
PDI PRESSURE DIFFERENTIAL INDICATOR
FQ FLOW TOTALIZER
S SOLENOID
PDS PRESSURE DIFFERENTIAL SWITCH
FLOW METER
ISOLATION VALVE
CHECK VALVE
S/D SHUT DOWN
RECIRCULATION PUMP
TANK MIXER AND MOTOR
POSITIVE DISPLACEMENT CHEMICAL METERING PUMP AND MOTOR (M)
SUBMERSIBLE CENTRIFUGAL PUMP
ASCO VALVE
P PRESSURE GAUGE
2 INCH DIA. CHEMICAL RESISTANT HOSE
SAMPLE TAP
S.T.
FOSTER WHEELER ENVIRONMENTAL
NORTHERN DIVISION
Piping and Instrumentation Diagram
Groundwater Treatment Building
DEPARTMENT OF THE NAVY
LESTER
NAVAL FACILITIES ENGINEERING COMMAND
PHILADELPHIA
NORTHDIV FOR COMMANDER, NAVFAC
DATE June 1998
APPROVED
SEAL AREA
RA AND/OR PE SEAL
SAT TO
DATE
CODE I.D. NO.
SCALE :
SPEC. NO.
CONSTRN. CONTR. NO.
NAVFAC DRAWING NO.
SHEET OF
SIZE: D
DIS. SH. NO.
DRAWING FILE NAME: trt2new.dwg
DATE CREATED
LATEST CHANGE 6/30/98
CHANGED BY:

FOSTER WHEELER

NAWC - Trenton
Proposed Carbon Unit Configuration Schedule

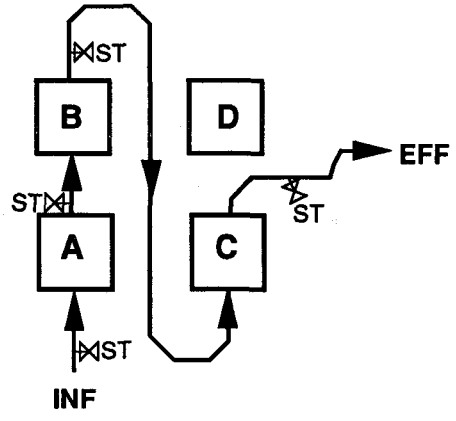

Initial and when Unit D needs change out. Begin with start-up in this configuration. When Unit A unit has breakthrough go to configuration 2.

1

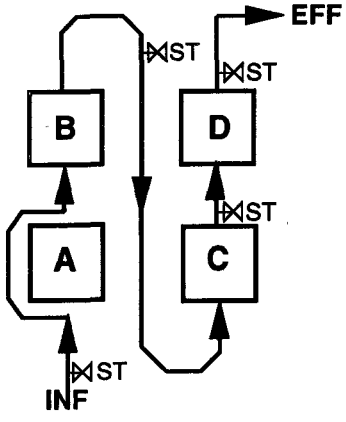

When Unit A needs change out. When Unit B has breakthrough, go to configuration 3.

2

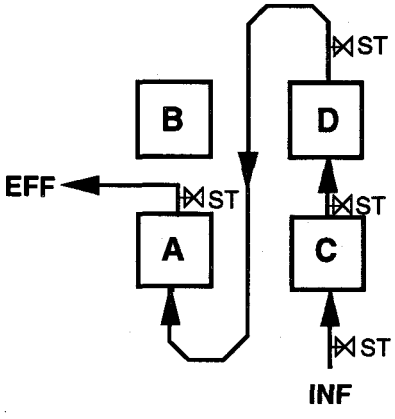

When Unit B needs change out. When Unit C has breakthrough go to configuration 4.

3

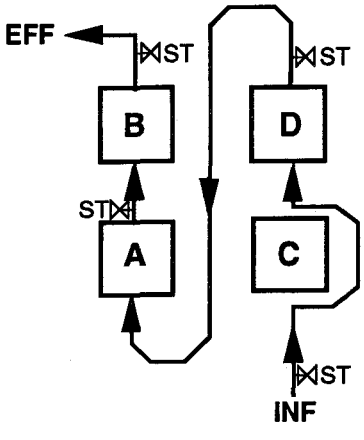

When Unit C needs change out. When Unit D has breakthrough, go to configuration 1.

4

ST : Sampling Tap

TABLE 1.1
EFFLUENT LIMITATIONS AND MONITORING REQUIREMENTS
INDUSTRIAL DISCHARGE PERMIT #00104
DISCHARGE POINT DSN #002
(SOURCE: LETTER FROM EWING-LAWRENCE SEWERAGE AUTHORITY TO NAWC TRENTON, DATED MAY 17, 1995)

Parameter	Maximum	Sample Type	Sampling Frequency
Flow	35,000 gallons per day	---	Continuous
pH	Between 6.0 and 10.0 standard units	Grab	Monthly (1)
TSS	510 mg/L	TPC	Monthly
Total Cyanide	2.0 mg/L	TPC	Monthly
Total Antimony	Report	TPC	Monthly
Total Arsenic	4.0 mg/L	TPC	Monthly
Total Barium	Report	TPC	Monthly
Total Beryllium	Report	TPC	Monthly
Total Cadmium	0.1 mg/L	TPC	Monthly
Total Chromium	3.0 mg/L	TPC	Monthly
Total Copper	1.0 mg/L	TPC	Monthly
Total Lead	0.5 mg/L	TPC	Monthly
Total Mercury	0.1 mg/L	TPC	Monthly
Total Nickel	3.0 mg/L	TPC	Monthly
Total Selenium	0.5 mg/L	TPC	Monthly
Total Silver	0.5 mg/L	TPC	Monthly
Total Thallium	Report	TPC	Monthly
Total Zinc	2.0 mg/L	TPC	Monthly
TTO (2)	0.1 mg/L	Grab	Monthly

(1) A minimum of four grab samples must be used to provide a representative sample of the effluent pH, cyanide, and phenols being discharged. Dilution to meet the above effluent limitations may not be practiced.

(2) The term "TTO" shall mean Total Toxic Organics, which is the summation of all quantifiable values greater than 0.01 mg/L (or 10 µg/L) for the toxic organics indicated in 40 CFR 433.11 et seq. as follows: Acenaphthene; acrolein; acrylonitrile; benzene; benzidine; carbon tetrachloride (tetrachloromethane); chlorobenzene; 1,2,4-trichlorobenzene; hexachlorobenzene; 1,2-dichloroethane; 1,1,1-trichloroethane; hexachloroethane; 1,1-dichloroethane; 1,1,2-trichloroethane; 1,1,2,2-tetrachloroethane; chloroethane; bis (2-chloroethyl) ether; 2-chloroethyl vinyl ether (mixed); 2-chloronaphthalene; 2,4,6-trichlorophenol; parachlorometa cresol; chloroform (trichlormethane); 2-chlorophenol; 1,2-dichlorobenzene; 1,3-dichlorobenzene; 1,4-dichlorobenzene; 3,3-dichlorobenzidine; 1,1-dichloroethylene; 1,2-trans-dichloroethylene; 2,4-dichlorophenol; 1,2-dichloropropane; 1,3-dichloropropylene (1,3-dichloropropene); 2,4-dimethylphenol; 2,4-dinitrotoluene; 2,6-dinitrotoluene; 1,2-diphenylhydrazine; ethylbenzene; fluoranthene; 4-chlorophenyl phenyl ether; 4-bromophenyl phenyl ether; bis (2-chloroisopropyl) ether; bis (2-chloroethoxy) methane; methylene chloride (dichloromethane); methyl chloride (chloromethane); methyl bromide (bromomethane); bromoform (tribromomethane); dichlorobromomethane; chlorodibromomethane; hexachlorobutadiene; hexachlorocyclopentadiene; isophorone; naphthalene; nitrobenzene; 2-nitrophenol; 4-nitrophenol; 2,4-dinitrophenol; 4,6-dinitro-o-cresol; N-nitrosodimethylamine; N-nitrosodiphenylamine; N-nitrosodi-n-propylamine; pentachlorophenol; phenol; bis (2-ethylhexyl) phthalate; butyl benzyl phthalate; di-n-butyl phthalate; di-n-octyl phthalate; diethyl phthalate; dimethyl phthalate; 1,2-benzanthracene (benzo(a)anthracene); benzo(a)pyrene (3,4-benzopyrene); 3,4-benzofluoranthene (benzo(b)fluoranthene); 11,12-benzofluoranthene (benzo(k)fluoranthene); chrysene; acenaphthylene; anthracene; 1,12-benzoperylene (benzo(ghi)perylene); fluorene; phenanthrene; 1,2,5,6-dibenzanthracene (dibenzo(a,h)anthracene); indeno (1,2,3-cd) pyrene (2,3-o-phenlene pyrene); pyrene; tetrachloroethylene; toluene; trichlorethylene; vinyl chloride (chloroethylene); aldrin; dieldrin; chlordane (technical mixture and metabolites); 4,4-DDT; 4,4-DDE (p,p-DDX); 4,4-DDD (p,p-TDE); alpha-endosulfan; beta-endosulfan; endosulfan sulfate; endrin; endrin aldehyde; heptachlor; heptachlor expoxide (BHC-hexachloro-cyclohexane); alpha-BHC; beta-BHC; gamma-BHC; delta-BHC;(PCB-polychlorinated biphenyls); PCB-1242 (arochlor 1242); PCB-1254 (arochlor 1254); PCB-1221 (arochlor 1221); PCB-1232 (arochlor 1232); PCB-1248 (arochlor 1248); PCB-1260 (arochlor 1260); PCB-1016 (arochlor 1016); toxaphene; 2,3,7,8-tetrachlorodibenzo-p-dioxin (TCDD)

FOSTER WHEELER

Naval Air Warfare Center, Trenton NJ

First Month Startup Sampling Schedule

Parameter	Sampling Point	Frequency	Period	Type	Analysis (Lab/GC/Auto)	O & M or ELSA Reqr'd
Flow	1	Continuous	NA	NA	Data Logger	O & M
	10	Continuous	NA	NA	Data Logger	ELSA
pH	2	Continuous	NA	NA	Data Logger	O & M
	4	Continuous	NA	NA	Data Logger	O & M
	9	Continuous	NA	NA	Data Logger	ELSA
Iron	3	3/week	1 month	Grab	Lab	O & M
	4	3/week	1 month	Grab	Lab	O & M
Metals*	10	1/month	1 month	24 hr comp.	Lab	ELSA
Cyanide	10	1/month	1 month	24 hr comp.	Lab	ELSA
TSS	4	1/week	1 month	Grab	Lab	O & M
	5	1/week	1 month	Grab	Lab	O & M
	6	1/week	1 month	Grab	Lab	O & M
	10	1/month	1 month	24 hr comp.	Lab	ELSA
VOA	1	Daily	1 month	Grab	GC	O & M
	7	Daily	1 month	Grab	GC	O & M
	8	Daily	1 month	Grab	GC	O & M
	10	Daily	1 month	Grab	GC	O & M
VOA	1	1/week	1 month	Grab	Lab	O & M
	7	1/week	1 month	Grab	Lab	O & M
	8	1/week	1 month	Grab	Lab	O & M
	10	1/week	1 month	Grab	Lab	O & M
TTO	10	1/month	1 month	24 hr comp.	Lab	ELSA

Sampling Point Key:

1. Influent (Pre-Process, Pre-Equalization Tank)
2. Equalization Tank
3. Clarifier
4. Pre-Sand Filter (Post pH Adjustment)
5. Pre-Bag Filter
6. Pre-Carbon Filter
7. Post Carbon Unit One
8. Post Carbon Unit Two
9. Discharge Tank
10. Effluent

* Metals List - Antimony, Arsenic, Barium, Beryllium, Cadmium, Chromium, Copper, Iron, Lead, Mercury, Nickel, Selenium, Silver, Thallium, Zinc.

TABLE 1.2
ANALYTICAL REQUIREMENTS
(SAMPLES COLLECTED TWICE PER MONTH, MINIMUM)

Analyte	Method
Phenols	EPA 420
BOD_5	EPA 405.1
Total Suspended Solids	EPA 160.2
pH	EPA 150.1
Metals: Antimony	EPA 6010
Arsenic	EPA 6010
Barium	EPA 6010
Beryllium	EPA 6010
Cadmium	EPA 6010
Chromium	EPA 6010
Copper	EPA 6010
Iron	EPA 6010
Lead	EPA 6010
Mercury	EPA 7470
Nickel	EPA 6010
Selenium	EPA 6010
Silver	EPA 6010
Thallium	EPA 6010
Zinc	EPA 6010
Total Cyanide	EPA 335.3
Volatile Organic Compounds:	EPA 8240 (SW-846)
Chloromethane	
Bromomethane	
Vinyl Chloride	
Chloroethane	
Methylene Chloride	
Acetone	
Carbon Disulfide	
1,1-Dichloroethene	
1,1-Dichloroethane	
cis-1,2-Dichloroethene	
trans-1,2-Dichloroethene	
Chloroform	
1,2-Dichloroethane	
2-Butanone	
1,1,1-Trichlorethane	
Carbon Tetrachloride	
Bromodichlormethane	
1,2-Dichloropropane	
cis-1,3-Dichloropropene	
Trichloroethene	
Benzene	
Dibromochloromethane	
trans-1,3-Dichloropropene	
1,1,2-Trichloroethane	
Bromoform	
4-Methyl-2-Pentanone	
2-Hexanone	
Tetrachloroethene	
1,1,2,2-Tetrachloroethane	
Toluene	
Chlorobenzene	
Ethylbenzene	
m+p-Xylene	
o-Xylene	
Styrene	

TABLE 1.2
ANALYTICAL REQUIREMENTS
(SAMPLES COLLECTED TWICE PER MONTH, MINIMUM)

Analyte	Method
Semi-Volatile Organic Compounds [1]	EPA 8270 (SW-846)
bis (2-Chloroethyl) Ether	
Phenol	
2-Chlorophenol	
1,3-Dichlorobenzene	
1,4-Dichlorobenzene	
1,2-Dichlorobenzene	
Benzyl Alcohol	
bis (2-Chloroisopropyl) Ether	
2-Methylphenol	
Hexachloroethane	
N-Nitroso-di-n-propylamine	
4-Methylphenol	
Nitrobenzene	
Isophorone	
2-Nitrophenol	
2,4-Dimethylphenol	
Benzoic Acid	
bis (2-Chloroethoxy) Methane	
2,4-Dichlorophenol	
1,2,4-Trichlorobenzene	
Naphthalene	
4-Chloroaniline	
Hexachlorobutadiene	
4-Chloro-3-Methyl Phenol	
2-Methylnaphthalene	
Hexachlorocyclopentadiene	
2,4,6-Trichlorophenol	
2,4,5-Trichlorophenol	
2-Chloronaphthalene	
2-Nitroaniline	
Acenaphthylene	
Dimethylphthalate	
2,6-Dinitrotoluene	
Acenaphthene	
3-Nitroaniline	
2,4-Dinitrophenol	
Dibenzofuran	
2,4-Dinitrotoluene	
4-Nitrophenol	
Fluorene	
4-Chlorophenyl-phenylether	
Diethylphthalate	
4-Nitroaniline	
4,6-Dintro-2-methylphenol	
n-Nitrosodiphenylamine	
4-Bromophenyl-phenylether	
Hexachlorobenzene	
Pentachlorophenol	
Phenanthrene	
Anthracene	
Di-n-butylphthalate	
Fluoranthene	
Pyrene	
Butylbenzylphthalate	
3,3'-Dichlorobenzidine	
Benzo [a] anthracene	
Chrysene	
bis (2-Ethylhexyl) phthalte	
Di-n-octyl phthalate	

TABLE 1.2
ANALYTICAL REQUIREMENTS
(SAMPLES COLLECTED TWICE PER MONTH, MINIMUM)

Analyte	Method
Semi-Volatile Organic Compounds (continued) Benzo [b] fluoranthene Benzo [k] fluoranthene Benzo [a] pyrene Indeno [1,2,3-cd] pyrene Dibenz [a,h] anthracene Benzo [g,h,i] perylene	

(1) Based on discussions with the ELSA representative, William Carmichael, the Navy may petition for waiver of the SVOA analysis if, after six months of O&M, no SVOA compounds have been detected in the influent.

TABLE 1.3
SAMPLE CHAIN-OF-CUSTODY FORM

American Environmental Network

JOB # _____

BDQ # _____

☐ 28 Springdale Road
Cherry Hill, New Jersey 08003
(609) 751-1122 • (800) 879-5221
Fax: (609) 751-0824

☐ 9151 Rumsey Road, Suite 150
Columbia, Maryland 21045
(410) 730-8525 • (800) 899-8525
Fax: (410) 997-2586

Analysis Request and Chain-of-Custody

☐ 3440 Vincent Road
Pleasant Hill, California 94523
(510) 930-9090
Fax: (510) 930-0256

Client _____ Project: NAWC Trenton AEN Contact _____

LAB I.D. NO.	FIELD SAMPLE I.D. NO.	DATE	USE 24 HR. CLOCK TIME	MATRIX	40 ml vials HCL Pres.	950 ml Org. Pres.	950 ml Unpres.	250 ml Unpres.	500 ml HNO_3	ml H_2SO_4	ml H_2SO_4	950 ml NaOH	950 ml Org. Pres.		ANALYSIS REQUES' .D PARAMETERS
	System Influent (817-INF)	8/17/95	1005	water	X				X				X		VOA, Metals, SVOA
	Lead Carbon Cell Discharge (817-BTW)	8/17/95	1008	water	X										VOA
	System Effluent (817-EFL)	8/17/95	1000	water	X	X	X	X	X			X	X		VOA, Phenols, BOD_5, TSS, pH, Metals, Cyanide, SVOA

1. Field Measurements:
   Data Sheets: Y (N)
   Filtered: Y (Not Required)
2. Chain of Custody
   Seal No. _____

I. Field Conditions/Comments: Effluent sample for metals analysis collected from TSSD 24-hour sampler; all other samples are grabs.

II. Special Instructions: (Detection Limits, Data Package, etc.) Effluent metals analysis must include, at a minimum: arsenic, cadmium, antimony, barium, beryllium, chromium, copper, cyanide, iron, lead, mercury, nickel, selenium, silver, and zinc. thallium

Relinquished By:	Date/Time (use 24 hr. clock)	Received By:	Date/Time (use 24 hr. clock)
Print Name:		Print Name:	
Signature:		Signature:	
Print Name:		Print Name:	
Signature:		Signature:	

TABLE 1.4
SUMMARY OF CONTAMINANT HAZARDS AND TREATMENT SYSTEM CHEMICAL HAZARDS
(SOURCE: NIOSH POCKET GUIDE TO CHEMICAL HAZARDS DATED JUNE 1994)

Chemical name, structure / formula, CAS and RTECS Nos., and DOT ID guide Nos.	Synonyms, trade names, and conversion factors	Exposure limits (TWA unless noted otherwise)	IDLH	Physical description	Chemical and physical properties		Incompatibilities and reactivities	Measurement method (see Table 1)	Personal protection and sanitation (see Table 3)	Recommendations for respirator selection - maximum concentration for use (MUC) (see Table 4)	Health hazards			
					MW, BP, SOL, FLP, IP, Sp.Gr., flammability	VP, FRZ, UEL, LEL					Route	Symptoms (see Table 5)	First Aid (see Table 6)	Target organs (see Table 5)
Vinyl chloride CH_2=CHCl 75-01-4 KU9625000 1086 17	Chloroethene Chloroethylene Ethylene monochloride Monochloroethene Monochloroethylene VC Vinyl chloride monomer (VCM) 1 ppm = 2.60 mg/m³	NIOSH Ca See Appendix A [Use 1910.1017] OSHA [1910.1017] 1 ppm C 5 ppm [15 min.]	Ca [N.D.]	Colorless gas or liquid (below 7°F) with a pleasant odor at high concentrations [Note: Shipped as a liquefied compressed gas]	MW: 62.5 BP: 7°F Sol (77°F): 0.1% FLP: NA (Gas) IP: 9.99 eV RgasD: 2.21 Flammable Gas	VP: 3.3 atm FRZ: -256°F UEL: 33.0% LEL: 3.6%	Copper, oxidizers, aluminum, peroxides, iron, steel [Note: Polymerized in air, sunlight, or heat unless stabilized by inhibitors such as phenol. Attacks iron & steel in presence of moisture	Char (2); CS_2; GC/FID; III [#1007]	Skin: Frostbite Eyes: Frostbite Wash skin: N.R. Remove: When wet (flamm) Change: N.R. Provide: Frostbite	NIOSH ¥:SCBAF:PD,PP/SAF:PD,PP:ASCBA Escape: GMFS/SCBAE	Inh Con (liq)	Weak; abdom pain, GI bleeding; enlarged liver; pallor or cyan of extremities; liq: frostbite; [carc]	Eye: Frostbite Skin: Frostbite Breath: Resp support	Liver, CNS, blood, resp sys, lymphatic sys [liver cancer]
Trichloroethylene $ClCH=CCl_2$ 79-01-6 KX4550000 171074	Ethylene trichloride TCE Trichloroethene Trilene 1 ppm = 5.46 mg/m³	NIOSH Ca See Appendix A See Appendix C OSHA† 100 ppm C200 ppm 300 ppm (5-min max peak in any 2 hrs)	Ca [1000 ppm]	Colorless liquid (unless dyed blue) with a chloroform-like odor	MW: 131.4 BP: 189°F Sol (77°F): 0.0001% FLP: ? IP: 9.45 eV Sp.Gr.: 1.46 Combustible Liquid, but burns with difficulty	VP: 58 mm FRZ: -99°F UEL(77°F): 10.5% LEL(77°F): 8%	Strong caustics & alkalis; chemically-active metals (such as barium, lithium, sodium, magnesium, titanium & beryllium)	Char; CS_2; GC/FID; III [#1022]	Skin: Prevent skin contact Eyes: Prevent eye contact Wash Skin: When contam Remove: When wet or contam Change: N.R. Provide: Eyewash, Quick drench	NIOSH ¥:SCBAF:PD,PP/SAF:PD,PP:ASCBA Escape: GMFOV/SCBAE	Inh Abs Ing Con	Irrit eyes, skin; head, verti; vis dist, ftg, gidd, tremor, som, nau, vomit; derm; card arrhy, pares; liver inj; [carc]	Eye: Irr immed Skin: Soap wash prompt Breath: Resp support Swallow: Medical attention immed	Eyes, skin, resp sys, heart, liver, CNS [in animals: liver & kidney cancer]
1,2-Dichloroethylene ClCH=CHCl 540-59-0 KV9360000 1150 29	Acetylene dichloride cis-Acetylene dichloride trans-Acetylene dichoride sym-Dichloroethylene 1 ppm = 4.03 mg/m³	NIOSH/OSHA 200 ppm (790 mg/m³)	1000 ppm	Colorless liquid (usually a mixture of the cis & trans isomers) with a slightly acrid, chloroform-like odor	MW: 97.0 BP: 118-140°F Sol: 0.4% FLP: 36-39°F IP: 9.65 eV Sp.Gr(77°F): 1.27 Class IB Flammable Liquid	VP: 180-265 mm FRZ: -57 to -115°F UEL: 12.8% LEL: 5.6%	Strong oxidizers, strong alkalis, potassium hydroxide, copper [Note: Usually contains inhibitors to prevent polymerization]	Char; CS_2; GS/FID; III [#1003, Halogenated Hydrocarbons]	Skin: Prevent skin contact Eyes: Prevent eye contact Wash skin: When contam Remove: When wet (flamm) Change: N.R.	NIOSH/OSHA 1000 ppm: SA:CF[5]/PAPROV[4]/CCRFOV/GMFOV/SCBAF/SAF §: SCBAF:PD,PP/SAF:PD,PP:ASCBA Escape: GMFOV/SCBAE	Inh Ing Con	Irrit eyes, resp sys; CNS depres	Eye: Irr immed Skin: Soap flush prompt Breath: Resp support Swallow: Medical attention immed	Eyes, resp, sys, CNS
Sodium hydroxide NaOH 1310-73-2 WB4900000 1823 60 (solid) 1824 60 (solution)	Caustic soda Lye Soda lye Sodium hydrate	NIOSH C 2 mg/m³ OSHA† 2 mg/m³	10 mg/m³	Colorless to white, odorless solid (flakes, beads, granular form)	MW: 40.0 BP: 2534°F Sol: 111% FLP: NA IP: NA Sp.GR: 2.13 Noncombustible solid, but when in contact with water may generate sufficient heat to ignite combustible materials	VP: 0 mm (approx) MLT: 605°F UEL: NA LEL: NA	Water; acids; flammable liquids; organic halogens; metals such as aluminum, tin & zinc; nitromethane [Note: Corrosive to metals]	Filter; HCl; Titrate; III [#7401, Alkaline Dusts]	Skin: Prevent skin contact Eyes: Prevent eye contact Wash skin: When contam Remove: When wet or contam Change: Daily Provide: Eyewash, Quick drench	NIOSH/OSHA 10 mg/m³: SA:CF[6]/HiEF/PAPRDM[4]/SCBAF/SAF §: SCBAF:PD,PP/SAF:PD,PP:ASCBA Escape: HiEF/SCBAE	Inh Ing Con	Irrit eyes, skin, muc memb; pneuitis; eye, skin burns; temporary loss of hair	Eye: Irri immed Skin: Water flush immed Breath: Resp support Swallow: Medical attention immed	Eyes, skin , resp sys
Sulfuric acid H_2SO_4 7664-93-9 WS5600000 1830 39 (51-95% acid) 1831 39 (fuming) 1832 39 (spent)	Battery acid Hydrogen sulfate Oil of vitriol Sulfuric acid (aqueous) 1 ppm = 4.08 mg/m³	NIOSH/OSHA 1 mg/m³	15 mg/m³	Colorless to dark-brown, oily, odorless liquid [Note: Pure compound is a solid below 51°F. Often used in an aqueous solution.]	MW: 98.1 BP: 554°F Sol: Miscible FLP: NA IP: ? Sp.Gr: 1.84 (96-98% acid) Noncombustible liquid, but capable of igniting finely divided combustible materials	VP: 0.001 mm FRZ: 51°F UEL: NA LEL: NA	Organic materials, chlorates, carbides, fulminates, water, powdered metals [Note: Reacts violently with water with evolution of heat. Corrosive to metals.]	Si gel: $NaHCO_3$/Na_2CO_3; IC; III [#7903, Inorganic Acids]	Skin: Prevent skin contact Eyes: Prevent eye contact Wash skin: When contam Remove: When wet or contam Change: N.R. Provide: Eyewash (>1%), Quick drench (>1%)	NIOSH/OSHA 25 mg/m³: SA:CF[6]/PAPRAGHiE[4] 50 mg/m³: CCRFAGHiE/GMFAGHiE/SCBAF/SAF 80 mg/m³: SAF:PD,PP §: SCBAF:PD,PP/SAF:PD,PP:ASCBA Escape: GMFAGHiE/SCBAE	Inh Ing Con	Irrit eyes, skin, nose, throat; pulm edema, bron; emphy; conj; stomatis; dental erosion; trachbronc; eye, skin burns; derm	Eye: Irr immed Skin: Water flush immed Breath: Resp support Swallow: Medical attention immed	Eyes, skin, resp sys, teeth
Methyl alcohol CH_3OH 67-56-1 PC1400000 1230 28	Carbinol Columbian spirits Methanol Pyroligneous spirit Wood alcohol Wood naphtha Wood spirit 1 ppm = 1.33 mg/m³	NIOSH 200 ppm (260 mg/m³) ST 250 ppm (325 mg/m³) [skin] OSHA† 200 ppm (260 mg/m³)	6000 ppm	Colorless liquid with a characteristic pungent odor	MW: 32.1 BP: 147°F Sol: Miscible FLP: 52°F IP: 10.84 eV Sp.Gr: 0.79 Class IB Flammable Liquid	VP: 96 mm FRZ: -144°F UEL: 36% LEL: 6.0%	Strong oxidizers	Si gel; Water; GC/FID; III [#2000, Methanol]	Skin: Prevent skin contact Eyes: Prevent eye contact Wash skin: When contam Remove: When wet (flamm) Change: N.R.	NIOSH/OSHA 2000 ppm: SA 5000 ppm: SA:CF 6000 ppm: SAT:CF/SCBAF/SAF §: SCBAF:PD,PP/SAF:PD,PP:ASCBA Escape: SCBAE	Inh Abs Ing Con	Irrit eyes, skin, upper resp sys; head, drow, dizz, verti, li-head, nau, vomit; vis dist, optic nerve damage (blindness); derm	Eye: Irr immed Skin: Water flush immed Breath: Resp support Swallow: Medical attention immed	Eyes, skin, resp sys, CNS, GI tract
Nitric acid HNO_3 7697-37-2 QU5775000 1760 60 (40% acid) 2031 44(>40% acid) 2032 44(fuming)	Aqua fortis Engravers acid Hydrogen nitrate Red fuming nitric acid (RFNA) White fuming nitric acid (WFNA) 1 ppm = 2.62 mg/m³	NIOSH/OSHA 2 ppm (5 mg/m³) ST 4 ppm (10 mg/m³) OSHA† 2 ppm (5 mg/m³) [Note: Often used in an aqueous solution. Fuming nitric acid is concentrated nitric acid that contains dissolved nitrogen dioxide.]	25 ppm	Colorless, yellow, or red, fuming liquid with an acrid, suffocating odor.	MW: 63.0 BP: 181°F Sol: Miscible FLP: NA IP: 11.95 eV Sp.Gr(77°F): 1.50 Noncombustible Liquid, but increases the flammability of combustible materials	VP: 48 mm FRZ: -44°F UEL: NA LEL: NA	Combustible materials, metallic powders, hydrogen sulfide, carbides, alcohols [Note: Reacts with water to produce heat. Corrosive to metals.]	Si gel; $NaHCO_3$/Na_2CO_3; IC; III [#7903, Inorganic Acids]	Skin: Prevent skin contact Eyes: Prevent eye contact Wash skin: When contam Remove: When wet or contam Change: N.R. Provide: Eyewash (pH<2.5), Quick drench (pH<2.5)	NIOSH/OSHA 25 ppm: SA:CF[6]/CCRFS[5]/GMFS[5]/SCBAF/SAF §: SCBAF:PD,PP/SAF:PD,PP:ASCBA Escape: GMFS[5]/SCBAE	In Ing Con	Irrit eyes, skin, muc memb; delayed pulm edema, pneuitis, bron; dental erosion	Eye: Irr immed Skin: Water flush immed Breath: Resp support Swallow: Medical attention immed	Eyes, skin, resp sys, teeth

TABLE 1.5
PERSONAL PROTECTION AND SANITATION CODES

CLOTHING Wear appropriate equipment to prevent:

AP liq/RP vap	Any possibility of liquid contact and repeated or prolonged vapor contact with skin
Any poss	Any possibility of skin contact
Any poss wet	Any possibility of skin becoming wet with contaminant
>%AP/y%RP	Any possibility of skin contact with liquids containing more than x% of contaminant, and repeated or prolonged skin contact with liquids containing y%
Prevent skin freezing	Self explanatory
Prevent contam or freeze	Skin contamination or freezing
Prevent wet or freeze	Skin becoming wet or frozen
Repeat prolong	Repeated or prolonged skin contact
Reason prob	Reasonable probability of skin contact

GOGGLES Wear eye protection to prevent:

Any poss	Any possibility of eye contact
Any poss (xxx)	Any possibility of substance xxx contacting the eyes
Reason prob	Reasonable probability of eye contact

WASH Employees should wash:

Contam ≥ x% immed/y% pro	Immediately when skin is contaminated with liquids containing ≥x% contaminant, and promptly when skin is contaminated with y%
Daily	At the end of each work shift
Daily/reason prob	At the end of each work shift when there is reasonable probability of contact with the contaminant
Immed upon contam	Immediately when skin becomes contaminated
Immed upon contam/daily	Immediately when skin becomes contaminated, and at the end of each work shift
Immed upon wet	Immediately when skin becomes wet
Immed wet/pro contam	Immediately when skin becomes wet, and promptly when skin becomes contaminated
Pro contam/immed wet/daily	Promptly when skin becomes contaminated, immediately with skin becomes wet, and at the end of each work shift
Promptly upon contam	Promptly when skin becomes contaminated
Promptly upon contam/daily	Promptly when skin becomes contaminated and at the end of each work shift
Promptly upon wet	Promptly when skin becomes wet
pH <3 immed contam/ pH ≥ 3 pro wet	Immediately when skin becomes contaminated with liquid of pH <3, and promptly when skin becomes wet with liquid of pH ≥3
Soap wash promptly	Promptly wash with soap when skin becomes contaminated

CHANGE Work clothing should be changed daily:

After work if any poss contam	If there is any possibility that the clothing may be contaminated
After work if may be contam	If it is reasonably probable that the clothing is contaminated

REMOVE Remove clothing:

Any contam immed	Immediately remove any clothing that becomes contaminated
Any wet immed	Immediately remove any clothing that becomes wet
Any wet immed (flamm)	Immediately remove any clothing that becomes wet to avoid flammability hazard

OTHER CODES:

Liq	Liquid
Molt	Molten
N.A.	No recommendation applied in this category
Sol	Solid
Soln	Solutions containing the contaminant
Vap	Vapor

TABLE 1.6
RESPIRATOR FOOTNOTES, CODE COMPONENTS, AND CODES

FOOTNOTES

•	End of Service Life Indicator required
ϕ	When respirators are to be used
▲	Substance reported to cause eye irritation or damage may require eye protection
δ	If not present as fume
Σ	Only non-oxidizable sorbents are allowed (not charcoal)
Ξ	> at any detectable concentration
ψ	Substance causes eye irritation or damage; eye protection needed
Ω	Emergency or planned entry in unknown concentration or IDLH conditions

CODE COMPONENTS

CCR	Chemical cartridge respirator
D	Dust respirator
Fu	Fume filter
GM	Air purifying respirator (gas mask) (front- or back-mounted or chin-style canister)
M	Mist respirator
PAPR	Powered air-purifying respirator
SA	Supplied-air respirator
SCBA	Self-contained breathing apparatus
AG	Acid gas cartridge or canister
CF	Continuous flow
F	Full facepiece
HiE	High-efficiency particulate filter
OV	Organic vapor cartridge or canister
PD,PP	Pressure demand or other positive pressure
S	Chemical cartridge or canister providing protection against the compound of concern
T	Tight-fitting facepiece
XS	Except single-use respirator
XSQ	Except single-use and quarter mask respirator
CCRAGFHiE	Any chemical cartridge respirator with a full facepiece and acid gas cartridge(s) in combination with a high-efficiency particulate filter
CCRAGHiE	Any chemical cartridge respirator with acid gas cartridge(s) in combination with a high-efficiency particulate filter
CCRFOV	Any chemical cartridge respirator with a full facepiece and organic vapor cartridge(s)
CCRFOVHiE	Any chemical cartridge respirator with a full facepiece and organic vapor cartridge(s) in combination with a high-efficiency particulate filter
CCROV	Any chemical cartridge respirator with organic vapor cartridge(s)
CCROVAG	Any chemical cartridge respirator with organic vapor and acid gas cartridge(s)
CCROVAGF	Any chemical cartridge respirator with a full facepiece and organic vapor and acid gas cartridge(s)
CCROVDM	Any chemical cartridge respirator with organic vapor cartridge(s) in combination with a dust and mist filter
CCROVDMF	Any chemical cartridge respirator with a full facepiece and organic vapor cartridge(s) in combination with a dust and mist filter
CCROVDMFu	Any chemical cartridge respirator with organic vapor cartridge(s) in combination with a dust, mist, and fume filter
CCROVFD	Any chemical cartridge respirator with a full facepiece and organic vapor cartridge(s) in combination with a dust filter

CHAPTER 1.0 - ATTACHMENT 1
ELSA DISCHARGE PERMIT REQUIREMENTS
(~~MAY 17, 1995~~ LETTER)

NOVEMBER 8, 1996

CHARLES GETER
Chairman

NORBERT DONELLY
Vice Chairman

ANNE ZAMONSKI
Treasurer

MARTIN JENNINGS
Secretary

WILIAM LAKE
Assistant Secretary

JEFFREY PERLMAN
Assistant Treasurer

W. BARRY RANK
Counsel

RAYMOND J. DiFRANCESCO
Executive Director

JACOBS ENVIRONMENTAL, INC.
Engineers

EWING-LAWRENCE SEWERAGE AUTHORITY

MERCER COUNTY

600 WHITEHEAD ROAD • LAWRENCEVILLE, NEW JERSEY 08648

TELEPHONE: (609) 587-4061
FAX: (609)890-1902

EWING TOWNSHIP

LAWRENCE TOWNSHIP

November 8, 1996

Naval Air Warfare Center-Aircraft Division
1440 Parkway Avenue
West Trenton, New Jersey 08628

Attention: Dave Clark, Environmental Engineer

Dear Mr. Clark:

Enclosed is the draft version of the Industrial Wastewater Discharge Permit for the Pretreatment Program. Please review the Permit and submit all comments in writing via certified mail to the Ewing-Lawrence Sewerage Authority (ELSA) within 30 days of receipt of this draft permit. If the permittee fails to raise or contest any reasonably ascertainable issues during the 30 day comment period, the right to raise or contest such issues shall be deemed waived. (N.J.A.C. 7:14A-8.4).

Note the Discharge Limitations section of the permit for changes in the "Flow Limitations" and the limits on "Total Toxic Organics (TTO's)". ELSA has submitted a request to the New Jersey Department of Environmental Protection to change the TTO limit to 1.0 mg/L. Pending this approval, the TTO discharge limit will be reserved. For those industrial users subject to Federal Categorical TTO limits, the Federal Categorical TTO limits will still apply until the submittal is approved by the NJDEP. At which time, the TTO limit will be changed to the approved limit.

Please submit to ELSA an updated discharge point schematic showing the final discharge point(s) at the facility site and any current or potential discharge lines flowing into the final discharge point(s). This schematic will be included in the final wastewater discharge permit.

(continued)

Should you have any questions, please contact William Carmichael, IWPP Coordinator, at (609) 587-4061.

Very truly yours,

Raymond J. DiFrancesco
Executive Director

RJD/med
enclosure

cc: William Carmichael

PERMIT NO. Draft
ISSUE:

EWING-LAWRENCE SEWERAGE AUTHORITY
LAWRENCEVILLE, NEW JERSEY

INDUSTRIAL WASTEWATER DISCHARGE PERMIT

In accordance with the provisions of the Federal Water Pollution Control Act (P.L. 92-500; 33 U.S.C.A. § 1251 et seq.) (hereinafter referred to as "the Act"), its Amendments, the State of New Jersey Water Pollution Control Act (L. 1977, c. 74 § 1, effective July 24, 1977) and the Ewing-Lawrence Sewerage Authority (ELSA) Rules and Regulations, **Naval Air Warfare Center-Aircraft Division** (hereinafter referred to as the "permittee") is classified as an existing **SIU industrial user** authorized to discharge from a facility located at:

1440 Parkway Avenue
Trenton, NJ 08628-0176

to the Ewing-Lawrence Sewerage Authority treatment works which includes the treatment plant, trunk sewers, pumping stations and meter chambers, in accordance with discharge limitations, monitoring requirements and other conditions set forth herein as adopted by the ELSA Board of Commissioners on {Reserved}. These Rules and Regulations are subject to future revisions as determined by the ELSA Board of Commissioners. These changes will be reflected in the Current Index on page iii.

Effective Date: Reserved

Expiration Date: Reserved

Ewing-Lawrence Sewerage Authority

By: _____
Raymond J. DiFrancesco
Executive Director

(Seal)

General Index Page

Industrial Wastewater Discharge Permit i
General Index ii
Current Issue Index iv

Description

I. General Conditions

A. Duty to Comply 1
B. Duty to Reapply 2
C. Continuation of Expired Permit 2
D. Permit Modification, Suspension, or Revocation 3
E. More Stringent Standard 3
F. Prohibited Discharges 4
G. Limitations on Wastewater Discharges 6
H. Sump Pumps, Downspouts and Yard Drains 7
I. Table 2-1 Local Limits 8
J. Continuous pH Monitoring Excursion 10
K. Proper Operation and Maintenance 11
L. Duty to Mitigate 11
M. Inspection & Entry 12
N. Change in Control or Ownership 13
O. Property Rights 13
P. Public Records 13
Q. Civil/Criminal Liabilities 14
R. Severability 14
S. Permit Fees 14
T. Correspondence 14

II. Monitoring and Reporting Requirements

A. Baseline Monitoring Reports 15
Compliance Schedule Progress Reports 15
Self-Monitoring Reports 16
B. Monitoring and Records 16
C. Signatory Requirements 19
D. Reporting Requirements 20

Page

III. Self-Monitoring Reports

A. Report Duties 23
B. Accidental Discharge Reports 24
C. Transmittal Sheet R-1
D. Self-Monitoring Report R-2
E. Accidental Discharge Report R-3
F. Table 1 - Discharge Limitations R-4
G. Final Effluent Sampling Location R-6
H. DSN-001 Location Drawing R-7

CURRENT ISSUE INDEX

Date of last revision of this index: JUNE 1, 1996

Page Number	Last Revision Date
i	8/15/95
ii	5/19/92
iii	8/15/95
iv	8/15/95
v	BLANK
1	8/15/95
2	9/17/91
3	6/01/96
4	9/17/91
5	9/17/91
6	9/17/91
7	9/17/91
8	5/19/92
9	8/15/95
10	8/15/95
11	9/17/91
12	9/17/91
13	5/19/92
14	6/01/96
15	8/15/95
16	6/01/96
17	9/17/91
18	9/17/91
19	9/17/91
20	9/17/91
21	9/17/91
22	9/17/91
23	9/17/91
24	8/15/95
25	8/15/95
R-1	9/04/91
R-2	6/25/91
R-3	8/15/95
R-4	6/01/96
R-5	8/15/95
R-6	8/15/95

BLANK

EWING-LAWRENCE SEWERAGE AUTHORITY

GENERAL CONDITIONS FOR ALL INDUSTRIAL WASTEWATER DISCHARGE PERMITS

I. GENERAL CONDITIONS

A. Duty to Comply

1. The permittee shall comply with all terms and conditions of this permit. The discharge of any pollutant more frequently than, at a rate in excess of, or at a concentration greater than that authorized by this permit shall constitute a violation of the terms and conditions of this permit. The discharge of any pollutant not specifically authorized in this permit or listed and quantified in the application for this permit shall constitute a violation of the permit, unless the permittee can prove by clear and convincing evidence to the Authority that the discharge of the unauthorized pollutant did not result from any of the permittee's activities which contribute to the generation of its non-domestic wastewater. Such a violation may result in the imposition of civil administrative and/or criminal penalties as provided for in Section 6 (Enforcement) of the Ewing-Lawrence Sewerage Authority's (ELSA) Rules and Regulations.

2. Any anticipated facility modification which will result in increased or decreased discharge of pollutants permitted herein or which result in the discharge of pollutants other than those permitted herein must be reported to the Authority within 90 days prior to the beginning of discharge by submission of a formal request to the Executive Director in accordance with the ELSA Rules and Regulations. Modifications to the permit may then be made to reflect any changes in permit conditions, as deemed necessary by the Authority. There shall be no new connections, increased flows, or changes in discharge quality permitted without the Authority's prior approval.

3. The filing of a formal request by a permittee for a permit modification does not stay any permit conditions.

4. A permittee shall not achieve any discharge concentration by dilution. Nor shall a permittee increase the use of process water or cooling water or otherwise attempt to dilute a discharge as a partial or complete substitute for adequate treatment to achieve permit limitations.

5. The permittee is required to comply with all applicable Federal, State and local rules, regulations, or ordinances and the ELSA Rules and Regulations. The issuance of this permit shall not be considered as a waiver of any federal, state, local or ELSA requirements.

B. Duty to Reapply

If the permittee wishes to continue an activity regulated by this permit after the expiration date, the permittee must apply for renewal at least 180 days prior to expiration of this existing permit.

C. Continuation of Expired Permit

1. The conditions of an expired permit are continued in force until the effective date of a new permit if:

   a. The permittee has submitted a timely and complete application for renewal in accordance with Part I, Section B of this permit and the ELSA Rules and Regulations or;

b. The Authority through; no fault of the permittee, does not issue a new permit with an effective date on or before the expiration date of the previous permit.

2. Permits under this section remain fully effective and enforceable.

D. Permit Modification, Suspension, or Revocation

This permit may be modified, suspended, or revoked in whole or in part during its term by the Authority for causes including, but not limited to, the following:

1. Violation of any terms or condition of this permit;

2. Obtaining this permit by misrepresentation or failure to disclose fully all relevant facts; or,

3. A change in any condition that requires either a temporary or permanent reduction or elimination of the permitted discharge.

E. More Stringent Standard

If a pollutant discharge limitation or prohibition is established by the United States Environmental Protection Agency (USEPA), the New Jersey Department of Environmental Protection (NJDEP) or ELSA, for any pollutant which is present in the discharge authorized herein and such standard or prohibition is more stringent than any prior discharge limitation upon such pollutant in this permit, this permit shall be revised or modified by the Authority in accordance with the pollutant discharge limitation or prohibition. The permittee shall comply with the more stringent pollutant discharge limitations or prohibitions even if the permit has not yet been modified to incorporate the requirement.

F. Prohibited Discharges

In accordance with the ELSA Rules and Regulations the discharge of any pollutant or pollutants which cause pass-through or interference or interfere with the operations of the ELSA treatment works is prohibited. Stormwater inflow, including surface and groundwater from sump pumps and cellar drains shall not be connected to any sewers to the ELSA treatment works without prior Authority approval. In addition, the permittee shall under no circumstances allow introduction of wastes into the Authority's system identified as "Prohibited Wastewaters" pursuant to Section 307 of the Federal Clean Water Act (the Act) (33 U.S.C.A. § 1251 *et seq.*) and its amendments.

Pursuant to 40 CFR 403.5(b) *et seq.* and N.J.A.C. 7:14A-1.3 *et seq.*, the following pollutants ***shall not*** be introduced into the ELSA treatment works by any Users:

1. Pollutants which create a fire or explosion hazard in the ELSA treatment works, including, but not limited to, waste streams with a closed cup flashpoint of less than 140 degrees Fahrenheit or 60 degrees centigrade using the test methods specified in 40 CFR 261.21.

2. Pollutants which will cause corrosive structural damage to the ELSA treatment works, but in no case discharges with pH lower than 5.0 standard units (su) or higher than 12.5 su.

3. Solid or viscous pollutants in amounts which will cause obstruction to the flow or result in interference or the proper operation of the ELSA treatment works.

4. Any pollutant, including oxygen demanding pollutants (BOD, etc.), released in a discharge at a flow rate and/or pollutant concentration which will cause interference, treatment process upset, and subsequent loss of treatment efficiency at the ELSA treatment works.

5. Heat in amounts which will inhibit biological activity in the ELSA treatment works resulting in interference, and in no case heat in such quantities that the temperature at the ELSA Treatment Plant exceeds 104°F (40°C).

6. Petroleum oils, nonbiodegradable cutting oils, or products of mineral oil origin that will cause interference or pass-through. All industrial and commercial facilities with the potential to discharge wastewater containing petroleum oils, nonbiodegradable cutting oils, or products of mineral oil origin, floatable fats, wax, grease or oils shall install grease traps to prevent their entry into the ELSA treatment works in excess of 100 milligrams per liter (mg/l).

7. Pollutants which result in the presence of toxic gases, vapors, or fumes within the ELSA treatment works in a quantity that may cause acute worker health and safety problems.

8. Any trucked or hauled pollutants, except at discharge points designated by ELSA.

9. Radioactive wastes.

10. Discolored wastewater.

11. Wastes which contain any noxious or malodorous gas or substance, capable of creating a public nuisance or hazard to life or health, or preventing entry into the ELSA system for its maintenance and repair.

12. Wastes which contain heavy metals, toxic materials or any other poisonous materials which in concentrations discharged into the ELSA system will have a deleterious effect on the wastewater treatment process, sludge processing, plant effluent or sludge produced.

13. Discharges which contain any unpolluted waters that may be discharged to a separate storm sewer without pretreatment.

14. Wastes of such a nature and in such a quantity as to impair the hydraulic capacity of the ELSA treatment works, normal and reasonable wear and usage excepted.

15. Wastes containing substances which are not amenable to treatment or reduction by the wastewater treatment processes employed, or are amenable to treatment only to such a degree that the ELSA wastewater treatment plant effluent cannot meet the requirements of the regulatory agencies having jurisdiction over discharge to the receiving waters, or result in concentrations in the sludge produced at the ELSA wastewater treatment plant which do not meet the requirements of the regulatory agencies or of the sludge disposal process being used.

16. Garbage or solid wastes of any kind from the domestic and/or commercial preparation, cooking, dispensing, handling, storage and/or sale of food.

17. Surface-active agents or synthetic detergents, unless of a type previously approved by the Authority and with a high degree of biodegradability.

18. Any radiological, chemical or biological warfare agent.

G. Limitations on Wastewater Discharges

Table 2-1 presents the maximum concentrations of certain pollutants allowable in wastewater discharges to the treatment works by any User. Dilution of any wastewater discharge for the purpose of satisfying these requirements shall be considered a violation of these Rules and Regulations.

All Users are limited by restrictions and prohibitions set forth in applicable State and Federal regulations, including categorical Pretreatment Standards, as promulgated. All dischargers to

ELSA shall discharge wastewater within the maximum concentration limitations allowed in the ELSA local limits. The Authority, at its sole discretion, for its protection and without affecting the water quality of its effluent discharge, may authorize as an alternate, on a case by case, pollutant-by-pollutant basis the utilization of proportionate equivalent mass loading, in lieu of the uniform maximum allowable ELSA local limit concentration.

H. Sump Pumps, Down Spouts and Yard Drains

Sump pumps, down spouts and yard drains are prohibited discharges, and are therefore subject to penalty fees in accordance with Section 6.7 (Penalties) of the ELSA Rules and Regulations.

TABLE 2-1

MAXIMUM PERMISSIBLE CONCENTRATIONS (mg/L)

Pollutant	1 Day Maximum	30 Day Average
Aldrin	*[1]	*
Dieldrin	*	*
DDE	*	*
DDD	*	*
DDT	*	*
PCB	*	*
Endrin		
(Manufacturer)	0.0075	0.0015
(Formulator)	*	*
Toxaphene		
(Manufacturer)	0.0075	0.0015
(Formulator)	*	*
Benzidine		
(Manufacturer)	0.050	0.010
(Dye Applicators)	0.025	0.010

[1]Prohibited from discharge

TABLE 2-1

(Continued)

The characteristics, per sample, of sewage and wastes discharged into the sewerage system shall not exceed the following standards:

Pollutant	Maximum Permissible Concentrations
BOD	300 mg/L
Suspended Solids	350 mg/L
Total Solids	5,000 mg/L
Phenols	0.5 mg/L
Cyanide as Cn	2.0 mg/L
Chromium as Cr	3.0 mg/L
Copper as Cu	1.0 mg/L
Iron as Fe	5.0 mg/L
Nickel as Ni	3.0 mg/L
Zinc as Zn	2.0 mg/L
Boron as B	1.0 mg/L
Lead as Pb	0.5 mg/L
Ether soluble matter	100 mg/L
Arsenic as As	4.0 mg/L
Aluminum Sulfate	10.0 mg/L
Cadmium as Cd	0.1 mg/L
Silver as Ag	0.5 mg/L
Selenium as Se	0.5 mg/L
Mercury as Hg	0.1 mg/L

J. Continuous pH Monitoring Excursion

The following excursions may be allowed by ELSA:

1. All ELSA Users that utilize or have installed continuous pH monitoring equipment may be allowed a 1% pH excursion as noted in the provisions under 40 CFR Part 401 *et seq.* and the NJDEP Bureau of Pretreatment and Residuals, New Jersey Pretreatment Implementation Memorandum No. 15.

2. The application of the 1% excursion for continuous pH monitoring will be allowed for acidic discharges where an acidic limit is specified in the ELSA IWPP permit the acidic limit so long as the discharge does not go below a pH of 5.0.In accordance with 40 CFR Part 403.5(b)(2), no discharge with a pH below 5.0 standard units (su) shall be allowed. Any discharge below 5.0 su shall be subject to an enforcement action.

3. The application of the 1% excursion for continuous pH monitoring will be allowed for alkaline discharges where an alkaline pH limit is specified in the ELSA IWPP permit. No discharge above 12.5 su shall be allowed. Any discharge above 12.5 su may be subject to an enforcement action.

4. Excursions exceeding 1% of the time during a calendar month (i.e., 7 hours, 26 minutes) above the alkaline limit (and/or below the acidic limit) specified in the permit are violations and are subject to enforcement actions.

5. Excursions of more than one continuous hour at any time are violations and are subject to enforcement actions.

K. Proper Operation and Maintenance

The permittee shall operate in a manner consistent with the following:

1. At all times, all facilities shall be operated and maintained in the most efficient manner which will minimize upsets and discharges of excessive quantities of pollutants. Facilities shall include the equipment and processes which result in a waste discharge.

2. The permittee shall provide adequate operating staff who are duly qualified to carry out the operation, maintenance and testing functions required to ensure compliance with the conditions of this permit and the ELSA Rules and Regulations.

L. Duty to Mitigate

The permittee shall take all reasonable steps to eliminate and/or correct any adverse impact to the Authority's Treatment Works and its appurtenances resulting from noncompliance with any discharge limitations specified in this permit. The permittee shall also provide accelerated or additional types of monitoring as necessary to determine the nature and impact of any discharge not in compliance with the limitations set forth in this permit. This condition in no way affects the Authority's right to suspend a permit in order to stop a discharge which the Executive Director decides may presents an imminent or substantial hazard to the public health, safety or welfare to the local environment or which interferes with the operation of the Authority's Treatment Works.

M. Inspection and Entry

The permittee shall allow any representatives of the Authority, upon the presentation of Authority credentials:

1. To enter upon the permittee's premises where a discharge source is located or in which any records are required to be kept under the terms and conditions of this permit;

2. To have access to and copy at reasonable times any records required to be kept under the terms and conditions of this permit;

3. To inspect at any time any facilities, equipment (including monitoring and control equipment), practices, or operations regulated or required under this permit; and

4. To sample or monitor at any time, for the purposes of assuring permit compliance, any discharge of pollutants to the system. The permittee shall maintain the sampling area clear of debris and easily accessible to Authority personnel.

Any refusal by the permittee, facility land owner(s), facility lessee(s), their agents, or any other person(s) with legal authority to allow entry to the authorized representative of the Authority shall constitute grounds for penalties, suspension, revocation and/or termination of this permit in accordance with the ELSA Rules and Regulations..

By acceptance of this permit, the permittee hereby agrees, consents and authorizes the representatives of the Authority to present a copy of this permit to any municipal or state police officer having jurisdiction over the premises occupied by the permittee in order to have said officer effectuate compliance, with the right to entry, should the permittee at any time refuse to allow entry to said inspectors.

By acceptance of this permit, the permittee waives all rights to prevent inspection by authorized representatives of the Authority to determine the extent of compliance with any and all conditions of this permit and agrees not to, in any manner, seek to charge said representatives with the civil or criminal act of trespass when they enter the premises occupied by the permittee in accordance with the provisions of this authorization as set forth hereinabove.

N. Change in Control or Ownership

In the event of any change in control or ownership of facilities from which the authorized discharges emanate, the permittee shall notify the succeeding owner or controller of the existence of this permit, and the need to apply for a new permit. A copy of the permittee's written notification to the succeeding owner or controller shall be forwarded to the Authority no later than 30 days prior to the change.

O. Property Rights

The issuance of this permit does not convey any property rights in either real or personal property, or any exclusive privileges, nor does it authorize any injury to private property or any invasion of personal rights, nor any infringement of Federal, State or local laws or regulations; nor does it obviate the necessity of obtaining State or local assent required by law for the discharge authorized.

P. Public Record

Except for data determined to be confidential under Section 308 of the Act, all monitoring reports required by this permit shall be available for public inspection at the Authority's office. Knowingly making any false statement on any such report may result in the imposition of criminal penalties.

Q. Civil/Criminal Liabilities

Nothing in this permit shall be construed to relieve the permittee from civil or criminal penalties for non-compliance. Nothing in this permit shall be construed to preclude the institution of any legal action nor relieve the permittee from any responsibilities, liabilities, or penalties established pursuant to any applicable State law or regulation under authority preserved and stated by N.J.A.C. 7:14 Subchapter 8.

R. Severability

The provisions of this permit are severable, and if any provision of this permit, or the application of any provisions of this permit to any circumstance, is held invalid, the application of such provision to other circumstance, and the remainder of this permit, shall not be affected thereby.

S. Permit Fees

The permittee shall pay all fees associated with wastewater discharge permit which will be assessed by the Authority.

T. Correspondence

All correspondence concerning this permit or any of its provisions shall be sent to:

Ewing-Lawrence Sewerage Authority
600 Whitehead Road
Lawrenceville, New Jersey 08648

Attention: Executive Director
Subject: Industrial Pretreatment Program
Permit No. _____

II. MONITORING AND REPORTING REQUIREMENTS

The following reports are to be completed by applicable Users to comply with the Authority's required monitoring and reporting requirements in accordance with 40 CFR 403 *et seq.*

A. BASELINE MONITORING REPORTS

Any new source identified by the Authority as a potential permittee must submit a Baseline Monitoring Report (BMR) within 90 calendar days of notification to submit the BMR by the Authority.

If subsequent to the issuance of an IWPP permit a Categorical Pretreatment Standard is promulgated pursuant to the Act, which is applicable to one or more of the permittee's operations, then within 180 days of the effective date of the applicable Categorical Pretreatment Standard(s) the User must submit a BMR in accordance with 40 CFR 403.12(b) *et seq.* The User shall conform to the applicable standards within the compliance period provided for in the regulations.

The Authority may allow the submission of a baseline report which utilizes only historical data so long as the data provides information sufficient to determine the need for industrial pretreatment measures.

The baseline report shall indicate the time, date and place of sampling, and methods of analysis, and shall certify that such sampling and analysis are representative of normal work cycles and expected pollutant discharges to ELSA.

COMPLIANCE SCHEDULE PROGRESS REPORTS

Compliance schedule Progress Reports, pursuant to 40 CFR 403.12 (c) and (d) *et seq.*, shall be submitted within 14 days after scheduled completion of each construction and operational milestone listed in a Compliance Schedule issued by the Authority.

SELF-MONITORING REPORTS

Self-Monitoring Reports (SMR) shall be submitted as specified in the ELSA Rules and Regulations and this permit. SMR's (R-2) shall include the results of all analyses performed during the intervals between report periods. SMRs shall be submitted in accordance with the reporting periods specified in this permit's Section IIIA (Report Duties). Properly signed reports required herein shall be submitted to the Authority at the following address:

Ewing-Lawrence Sewerage Authority
600 Whitehead Road
Lawrenceville, New Jersey 08872

Attention: Executive Director

Subject: Industrial Pretreatment Program

Permit No. ____

B. MONITORING AND RECORDS

1. Samples and measurements of the discharge waste streams taken in compliance with the monitoring requirements specified in Section III of this permit shall be taken at each point of discharge into the system and be representative of the monitored discharge. The permittee shall monitor all discharge pollutants from the final effluent sampling location point(s) indicated in Section III, Part G of this permit.

2. The permittee shall perform all analyses in accordance with the analytical test procedures promulgated under 40 CFR Part 136 *et seq* or as specified in this permit. If a procedure has not been promulgated for a particular pollutant, a method approved by the Authority may be used provided that a description of the method be submitted to the Authority for prior approval. The description should include the sample holding times, preservation techniques, and the quality control measures which are proposed to be used. The laboratory performing the analyses for compliance with these requirements must be approved and certified by the State of New Jersey for the analyses of these specific parameters. Sampling will be conducted in accordance with the NJDEP "Field Procedures Manual For Water Data Acquisition."

3. The permittee shall periodically calibrate and perform maintenance procedures on all monitoring and analytical instrumentation at intervals to insure accuracy of measurements.

4. The permittee shall retain records of all monitoring information, including all calibration and maintenance records from any continuous monitoring instrumentation, copies of all reports required by this permit, and records of all data used to complete the "Application for Non-Domestic Wastewater Discharge Permit," for a period of at least 5 years from the date of the sample, monitoring

report, or application. This period may be extended during the course of any unresolved litigation, or when so requested by the Authority at any time.

5. Records of monitoring information shall include, but are not necessarily limited to, the following:

   I. The date, location, and time of sampling or measurements.

   ii. The individual(s) who performed the sampling or measurements.

   iii. The date(s) analyses were performed.

   iv. The results of such analyses.

   v. The individuals who performed the analyses.

   vi. The analytical techniques or methods used.

6. If the permittee monitors any pollutant at the discharge point designated herein more frequently than required by this permit, using the approved analytical methods as specified above, the results of such monitoring shall be included in the calculation and reporting of the values required in the Self-Monitoring Report forms, such increased frequency shall also be indicated.

7. If a contract laboratory is utilized, the permittee shall submit the name and address of the laboratory and the parameters analyzed at the time it submits monitoring reports. Any change in the contract laboratory being used or the

parameters analyzed shall be reported prior to or together with the Self-Monitoring Report covering the period during which the change was made.

C. SIGNATORY REQUIREMENT

All permit applications and reports required by this section of the permit shall be signed by an authorized representative of the Industrial User. An authorized representative may be:

i. A principal executive officer of at least the level of vice president, if the Industrial User is a corporation.

ii. A general partner of proprietor if the Industrial User is a partnership or sole proprietorship, respectively.

iii. A duly authorized representative of the individual designated in subparagraph (I) or (ii) of this paragraph if such representative is responsible for the overall operation of the facility from which the discharge originates.

iv. If an authorization under subparagraph iii of this section is no longer accurate because a different individual or position has responsibility for the overall operation of the facility, a new authorization satisfying the requirements or

subparagraph iii of this section shall be submitted to the Authority prior to or together with any reports, information or application to be signed by an authorized representative.

v. The Self-Monitoring Report Transmittal Sheet shall be signed by an authorized representative of the Industrial User and the system licensed operator.

D. REPORTING REQUIREMENTS

1. Accidental Discharge

I. The permittee shall report any accidental discharge which may endanger health or the environment, or cause a violation of the conditions set forth within this permit. The permittee shall provide the Authority and the New Jersey Department of Environmental Protection (NJDEP) with the following information:

a. a description of the discharge;

b. steps being taken to determine the cause of non- compliance;

c. steps being taken to reduce, eliminate, and prevent recurrence of the non-complying discharge;

d. the period of non-compliance including exact dates and times, and if the non-compliance has not been corrected, the anticipated time the discharge will return to compliance; and

e. the cause of the non-compliance;

ii. The permittee shall orally provide the information in I. (a) through (e) to the Authority and the NJDEP within 24 hours of the time the permittee becomes aware of the non-compliance.

iii. A written submission shall be provided within 5 days of the time the permittee becomes aware of the non-compliance on an accidental discharge on the Report form supplied by the Authority in Section III, Part E (page R-3) of this permit. The written submission shall contain the information in I. (a) through (e).

2. Non-Compliance Reporting

i. The permittee shall report to the Authority any non-compliance that is discovered through the self- monitoring program orally within 24 hours of the time the permittee becomes aware of the non-compliance (1.ii). A written report must be provided within 5 days of the time the permittee

becomes aware of the non-compliance. The written submission shall contain the information required in 1.I(a) through (e).

3. Other Information

Where the permittee becomes aware that it failed to submit any relevant facts in a permit application, or submitted incorrect information in the permit application or in any report to the Authority, the permittee shall promptly submit such additional or corrected facts or information.

III. SELF-MONITORING REPORTS

A. Report Duties

Self-monitoring reports must be submitted to the Authority monthly by the following dates:

1. Reporting Period	Report Due Date
January 1 through January 31	March 1
February 1 through February 29	April 1
March 1 through March 31	May 1
April 1 through April 30	June 1
May 1 through May 31	July 1
June 1 through June 30	August 1
July 1 through July 31	September 1
August 1 through August 31	October 1
September 1 through September 30	November 1
October 1 through October 30	December 1
November 1 through November 30	January 1
December 1 through December 31	February 1

2. Discharge limitations, sampling types and frequencies are shown in Table 1, attached hereto.

B. Accidental Discharge Reports

1. Accidental discharges shall be reported in accordance with Section II-D.

2. A completed Accidental Discharge Report form must be submitted to the Authority within five (5) days of the accidental discharge.

PERMIT NO. Draft
ISSUE:

EWING-LAWRENCE SEWERAGE AUTHORITY

SELF-MONITORING REPORT
TRANSMITTAL SHEET

Permit No.: _____

Reporting Period: _____ through _____

Permittee: Name _____
Address _____
_____

Telephone No. _____

OPERATING EXCEPTIONS

	Yes	No
Temporary Bypassing	___	___
Monitoring Malfunctions	___	___
Units Out of Operation	___	___
Other	___	___

(Detail any "yes" on reverse side in appropriate space.)

CERTIFICATION

I certify under penalty of law that I have personally examined and am familiar with the information submitted in this document and all attachments and that, based on my inquiry of those individuals immediately responsible for obtaining the information, I believe the submitted information is true, accurate and complete. I am aware that there are significant penalties for submitting false information including the possibility of fine and imprisonment.

_____ _____
Signature of Authorized Representative Date

_____
Type or Print Name and Title of Authorized Representative

_____ _____
Signature of Licensed Operator - Grade & Registry No. Date

PERMIT NO. Draft
ISSUE:

EWING-LAWRENCE SEWERAGE AUTHORITY
INDUSTRIAL PRETREATMENT PROGRAM
ACCIDENTAL DISCHARGE REPORT*

Facility Name _____ Permit Number _____
Address _____ Discharge Point _____
_____ Date _____
Date of Occurrence _____ Time of Occurrence____
Duration _____
Volume Discharged _____
Material Discharged _____
Associated Hazards _____
Detailed Explanation of Cause of Discharge (attach additional pages if necessary):

_____
_____
_____
_____
_____

Corrective Action Taken:

_____
_____
_____
_____
_____

Steps Taken to Prevent Similar Occurrences:

_____

_____

_____

_____

_____

Name of person who First Notified Authority _____

Name of Person Notified at the Authority _____

Date _____ Time _____

Authorized Representative _____

Title _____ Signature _____

*Report must be filed within 5 days of accidental discharge in accordance with the Authority's Rules and Regulations.

F. TABLE 1. DISCHARGE LIMITATIONS Permit No. 00104 - DSN-002:

POLLUTANT	MAXIMUM CONC.	SAMPLING TYPE	SAMPLING FREQUENCY
FLOW **Daily Avg.**	35,000 GPD	----------	Continuous(3)
FLOW **Instant.**	79 GPM	----------	Continuous(3)
pH	6.0 TO 10.0 SU	GRAB	Monthly(1)
PHENOL	0.5 mg/L	GRAB	Monthly(1)
Cadmium	0.1 mg/L	TC	Monthly(2)
Chromium	2.77 mg/L	TC	Monthly(2)
Lead	0.5 mg/L	TC	Monthly(2)
Nickel	3.0 mg/L	TC	Monthly(2)
TTO	REPORT	GRAB	Monthly(5)
TSS	350 mg/L	TC	Monthly
Arsenic	4.0 mg/L	TC	Monthly(2)
Mercury	0.1 mg/L	TC	Monthly(2)

DISCHARGE LIMITATIONS Permit No. 00104-DSN 001

POLLUTANT	MAX. CONC.	SAMPLING TYPE	SAMPLING FREQ.
FLOW **Daily Avg.**	90,000 GPD	----------	Continuous(3)
FLOW **Instantaneous**	70 GPM	----------	Continuous(3)
pH	6.0 to 10.0 SU	GRAB	Monthly(1)
Phenols	0.5 mg/L	GRAB	Monthly(1)
TTO	RESERVED	GRAB	Monthly(5)
Oil & Grease	100 mg/L	GRAB	Monthly(1)

Priority Pollutants

The permittee ***shall*** perform semi-annual testing of all priority pollutants. The analysis shall be submitted, under separate cover, with the Self Monitoring Reports due on August 1 and February 1.

Note 1

A minimum of four (4) grab samples must be used to provide a representative sample of the effluent pH being discharged for **pH, oil & grease, and phenols**. Dilution to meet the above effluent limitations may not be practiced. Each grab sample shall have a duration of no longer than 15 minutes from commencement to end and shall be taken over the **operating hours** of the facility.

Note 2

For all metals a 24hour timed composite (TC) must be obtained where feasible. Dilution to meet the above effluent limitations may not be practiced.

Note 3

The flow reported shall be the **maximum average** daily amount discharged to the ELSA treatment works within a 24hr period. Flow rate is the **maximum rate, not be exceeded**, at which flow may be discharged to the sewer system.

Note 4

The term "TTO" shall mean total toxic organics, which is the summation of all quantifiable values greater than 0.01 milligrams per liter for the toxic organics indicated in 40 CFR 433.11.

Note 5

The Authority will allow the permittee to use the net effluent credit by parameter for TTO that is detectable in the influent water supply as analyzed in the monthly sampling conducted by the permittee. All monthly sampling results shall be submitted to the Authority with the corresponding monthly Self-Monitoring Report. Influent water supply sampling **must** coincide with the effluent sampling results. Non detectable or Undetectable minimum quantities of any pollutant **shall not** be allowed for credit. Non-detectable or Undetectable minimum quantities of pollutants shall be treated as having a value of zero (0) in all calculations for TTO credit.

Note 6

TTO Monitoring requirements:

a) In lieu of requiring monitoring for TTO, ELSA shall allow dischargers to make the following certification statement: "Based on my inquiry of the person or persons directly responsible for managing compliance with the permit limitation (or pretreatment standard) for total toxic organics (TTO), I certify that, to the best of my knowledge and belief, no dumping of concentrated toxic organics into the wastewaters has occurred since filling of the last discharge monitoring report. I further certify that this facility is implementing the toxic organic management plan submitted to the Ewing-Lawrence Sewerage Authority." The statement is to be included as a comment to the periodic reports required by 40 CFR 403.12(e). If monitoring is necessary to measure compliance with the TTO standard, the industrial discharger need analyze for only those pollutants which would reasonably be expected to be present.

b) In requesting the certification alternative, a discharger shall submit a toxic organic management plan that specifies to the satisfaction of the Ewing-Lawrence Sewerage Authority the toxic organic compounds used; the method of disposal; and procedures for ensuring that toxic organics do not routinely spill or leak into the wastewater.

G. FINAL EFFLUENT SAMPLING LOCATION

The permittee shall sample all the wastewater discharge pollutants from the final effluent sampling location point defined as DSN-001 (see attached sketch) on the permittee's pretreatment system. The permittee shall not discharge pollutants to ELSA from any location which does not discharge wastewater through the permit indicated final effluent sampling location.

caa\UG\ELSADRAF.PER

CHAPTER 1.0 - ATTACHMENT 2
SAMPLE DISCHARGE MONITORING REPORT

July 17, 1995

Ewing-Lawrence Sewerage Authority
600 Whitehead Road
Lawrenceville, NJ 08648

Gentlemen:

We are forwarding enclosure (1), our June 1995 Self-Monitoring Report for the Interim Remedial Action Groundwater Treatment System which started operation on March 13, 1995

Our points of contact are Mr. Prakash Herekar, Code PW1E (609-538-6904) or Mr. Kenneth Smith, Code PW1E (609-538-6677), or write Shore Station Management, Naval Air Warfare Center Aircraft Division (883800P), P.O. Box 7176, Trenton, New Jersey 078628-0176.

Sincerely,

T.M. Smith
Lieutenant Commander, CEC, USN
Public Works Officer
By direction of the Commanding Officer

Encl:
(1) June 1995 Self-Monitoring Report for Interim Remedial Action Groundwater Treatment System
(2) Laboratory Analytical Reports and Summary Tables -- June 1995

Blind copy to:
PW File
PW Day
PW1E
PW57
09AD

Writer: P. Herekar, PW1E, x6904
Typist: K. Lista, OHM
Response to: N/A

TTO Certification Statement

NAVAL AIR WARFARE CENTER AIRCRAFT DIVISION, TRENTON

Based on my inquiry of the person and/or persons directly responsible for managing compliance with the permit limitation (or treatment standard) for total toxic organics, I certify that, to the best of my knowledge and belief, no dumping of concentrated toxic organics into the wastewaters has occurred during the period June 1, 1995 through June 30, 1995, **with the exception of the effluent exceedence noted in the attached (non-intentional)**. I further certify that this facility is implementing the toxic organic management plan (Oil and Hazardous Substances Pollution Prevention - 5090.1A, Response to Discharges of Oil and Hazardous Substances - 5090.2, and Hazardous Waste Management Plan - 6240.3A) that has been submitted to the Ewing-Lawrence Sewerage Authority.

T.M. SMITH, LIEUTENANT COMMANDER, CEC, USN, Public Works Officer
Signature of Authorized Representative

ONLY REQUIRED IF TTO EXCEEDED

ISSUE: 5/23/91
REVISED: 9/04/91

EWING-LAWRENCE SEWERAGE AUTHORITY
SELF-MONITORING REPORT
TRANSMITTAL SHEET

ELSA Permit No.: 00104

Reporting Period: June 1, 1995 through June 30, 1995
Permittee: Name: Naval Air Warfare Center Aircraft Division
Address: 1440 Parkway Avenue
Trenton, New Jersey 08628-0176

Telephone No.: (609)538-6904

OPERATING EXCEPTION

	Yes	No
Temporary Bypassing	___	X
Monitoring Malfunctions	___	X
Units Out of Operation	X	___
Other	___	X

ONLY IF SYSTEM HAS BEEN SHUT DOWN

(Detail any "yes" on reverse side in appropriate space.) ==> Plant shut down June 28, 1995 at 1500 hours (restart scheduled on or about August 1, 1995).

CERTIFICATION

I certify under penalty of law that I have personally examined and am familiar with the information submitted in this document and all attachments and that, based on my inquiry of those individuals immediately responsible for obtaining the information, I believe the submitted information is true, accurate and complete. I am aware that there are significant penalties for submitting false information including the possibility of fine and imprisonment.

Signature of Authorized Representative — Date

T.M. SMITH, LIEUTENANT COMMANDER, CEC, USN, Public Works Officer
Type or Print Name and Title of Authorized Representative

Kathleen M. Lista - N2/N-1131 — July 17, 1995
Signature of Licensed Operator - Grade and Registry No. — Date

ISSUE: 5/23/91
REVISED: 6/25/91

EWING-LAWRENCE SEWERAGE AUTHORITY

INDUSTRIAL PRETREATMENT PROGRAM
SELF-MONITORING REPORT

Facility Name: Naval Air Warfare Center Aircraft Division, Trenton
Permit Number: 00104
Report Period: June 1, 1995 through June 30, 1995
Discharge Point: DSN-002

Pollutant	Effluent Concentration				Permit Limitations			Sampling Type	Sampling Frequency	No. of Days Exceeding Permit Limitation
	Maximum	Monthly Average	Minimum	Units	Maximum	Monthly Average	Minimum			
pH	7.4	7.4	7.4	s.u.	---	---	---	Grab	1/mo.	0
Phenols	NA	NA	NA	mg/l	0.5	---	---	Grab	1/mo.	0
Total Toxic Organics	14.000	SEE NOTES	9.000	mg/l	0.1	---	---	Grab	1/mo.	SEE NOTES
BOD_5	NA	NA	NA	mg/l	300	---	---	Grab	1/mo.	0
Total Suspended Solids	2	1.5	ND (<1)	mg/l	350	---	---	Grab	1/mo.	0
Cyanide	ND	ND	ND	mg/l	2.0	---	---	Grab	1/mo.	0
Chromium	ND	ND	ND	mg/l	3.0	---	---	Grab	1/mo.	0
Copper	ND	ND	ND	mg/l	1.0	---	---	Grab	1/mo.	0
Iron	0.497	0.388	0.278	mg/l	5.0	---	---	Grab	1/mo.	0

Pollutant	Effluent Concentration				Permit Limitations			Sampling Type	Sampling Frequency	No. of Days Exceeding Permit Limitation
	Maximum	Monthly Average	Minimum	Units	Maximum	Monthly Average	Minimum			
Nickel	ND	ND	ND	mg/l	3.0	---	---	Grab	1/mo.	0
Zinc	ND	ND	ND	mg/l	2.0	---	---	Grab	1/mo.	0
Lead	ND	ND	ND	mg/l	0.5	---	---	Grab	1/mo.	0
Arsenic	ND	ND	ND	mg/l	4.0	---	---	Grab	1/mo.	0
Cadmium	ND	ND	ND	mg/l	0.1	---	---	Grab	1/mo.	0
Silver	ND	ND	ND	mg/l	0.5	---	---	Grab	1/mo.	0
Selenium	ND	ND	ND	mg/l	0.5	---	---	Grab	1/mo.	0
Mercury	ND	ND	ND	mg/l	0.1	---	---	Grab	1/mo.	0

NA = Not analyzed; ND = Not detected; <4.0 = Not detected with a reporting limit of 4.0
Total Toxic Organics = Volatiles plus Semi-Volatiles
Calculation of monthly average is half of minimum plus maximum, with the reporting limit value used for the calculation.
NR = Not reported

Laboratory Name: American Environmental Network, Inc. NJDEP Laboratory Certification No.: 60056

NOTES:

1

REQUIRED TO EXPLAIN DISCHARGE EXCEEDANCE

Influent and effluent sample collection for the month of June was delayed due to ELSA's change in monitoring requirements (need for 24-hour timed composite sampling as per ELSA's letter dated May 17, 1995 and received by OHM May 22, 1995). The first June sample was collected on June 23, 1995. Sample results were faxed to OHM from the laboratory (American Environmental Network) on the afternoon of June 28, 1995 (1440 hrs). Upon reviewing the results, which showed that both carbon cells had broken through for vinyl chloride, exceeding the discharge criteria, OHM shut down the treatment plant at 1500 hours on June 28, 1995. Earlier that same day (6/28/95), the second set of June samples were collected. Though the data for both these sample rounds are the basis for reporting in the month of June, it is expected that the discharge exceedence was for a time period less than the elapsed time between sample collection (May 22, 1995 and June 23, 1995).

CHAPTER 1.0 - ATTACHMENT 3
NJDEP AIR PERMIT REQUIREMENTS
(JUNE ~~23, 1995~~ LETTER)

MAY 22, 1996

State of New Jersey
Department of Environmental Protection
Bureau of Air Quality Engineering
Air Quality Permitting Program
New Jersey Department of Environmental Protection
CN 027
Trenton, New Jersey 08625

Christine Todd Whitman
Governor

Robert C. Shinn, Jr.
Commissioner

May 22, 1996

Kenneth D. Smith
Environmental Coordinator
Naval Air Warfare Center
Aircraft Division Trenton
1440 Parkway Avenue
Trenton, New Jersey 08628

Re: Air Pollution Control (APC) Permit Equivalency Application
Air Stripper

Applicant's Designation of Stack: 0093
Log Number: 01-96-0889

Dear Mr. Smith:

The New Jersey Department of Environmental Protection (Department) has reviewed the referenced air pollution control permit application for the Groundwater Treatment Project for the Department of the Navy facility in Trenton, New Jersey. On the basis of all the information available, the Department concludes that the facility satisfies all applicable requirements of the New Jersey Air Pollution Control Regulations codified at N.J.A.C. 7:27-1 et seq.

The application involves the extraction of groundwater contaminated with chlorinated organic compounds. The groundwater will be treated in an air stripper. The vapor emissions from the stripper will be controlled by a Catalytic Oxidizer.

The conditions of approval for the Groundwater Treatment System are attached. All of these conditions must be complied with or a violation of the permit will result.

You are authorized to commence construction on this project on the effective date of this permit . This permit incorporates by reference all the conditions in the air permit control permit application received March 12, 1996, and all subsequent submittals, as well as the attached Conditions. The Conditions of Approval take precedence over conditions described in the application and subsequent submittals if there is any inconsistency.

If, in your judgement as an applicant for an air pollution control permit , the Department

is imposing any unreasonable Condition of Approval, you may contest the Department's decision and request a contested case hearing pursuant to the Administrative Procedure Act, N.J.S.A. 52:14b-1 et seq. and the New Jersey Administrative Code at N.J.A.C. 1:1 and 7:27-8.12. All requests for a contested case hearing must be received in writing by the Department within 20 calendar days of the date you receive this permit approval and must contain the information specified in Attachment - I (Administrative Hearing Request Checklist and Tracking Form for Permits).

You will be sent Form VEM-017 at a later date. Form VEM-017 will include Plant Identification Number, the New Jersey Stack Number, and the Permit /Certificate Number.

If you have any questions regarding this approval, please call Ann Ryan of my staff at (609) 292-1995, and refer to the log number above.

Sincerely

Dr. Iclal Atay, Chief
Bureau of Air Quality Engineering

c: J. Preczewski, Chief, BTS
CRO
A. Ryan
File

CONDITIONS FOR AIR POLLUTION CONTROL PERMIT TO CONSTRUCT, INSTALL OR ALTER CONTROL APPARATUS OR EQUIPMENT AND TEMPORARY CERTIFICATE TO OPERATE CONTROL APPARATUS OR EQUIPMENT FOR NAVAL AIR WARFARE CENTER TRENTON, NEW JERSEY

COMPANY DESIGNATION OF STACK:	0093
LOG NUMBER:	01-96-0889
PLANT ID NUMBER:	60014
DATE OF PERMIT :	May 22, 1996

TABLE OF CONTENTS

I. DEFINITIONS
The Department, BTS, Regional Enforcement Office

II. FACILITY DESCRIPTION
A. New Source Equipment
B. Stack Parameters
C. Air Pollution Control Equipment Design Specifications

III. PRE-OPERATIONAL REQUIREMENTS
Emission Testing

IV. OPERATIONAL REQUIREMENTS
A. Maximum Allowable Hourly Emission Rates
B. Operating Limitations
C. Monitoring Requirements
D. General Prohibition of Air Pollution
E. Visible Emissions
F. Recordkeeping
G. Reporting Requirements
H. Facility Inspections

I. DEFINITIONS:

The Department: New Jersey Department of Environmental Protection

BTS: Bureau of Technical Services
NJ Dept. of Environmental Protection
CN-411, Trenton, NJ 08625-0411
Phone: (609) 530-4041

Regional Enforcement Office: New Jersey Department of Environmental Protection
Central Regional Office (CRO)
CN 407
Trenton, New Jersey 08625-0407
(609) 584-4100

Chief, Bureau of Air Quality Engineering: N.J. Department of Environmental Protection
CN 027
Trenton, New Jersey 08625
(609) 984-0491

II. FACILITY DESCRIPTION

The permittee is authorized to construct the following equipment with the specifications indicated below.

A. NEW SOURCE EQUIPMENT

Air Stripper

B. STACK PARAMETERS

1. Stack Height: 20 feet
2. Stack Diameter: 8 inches
3. Distance to nearest property line: 100 feet

C. AIR POLLUTION CONTROL EQUIPMENT/DESIGN SPECIFICATION

Catalytic Oxidizer:

a. The maximum flow rate through the unit shall be 1005 actual cubic feet per minute.
b. The minimum exit temperature in the unit shall be 600 degrees Fahrenheit.
c. The minimum residence time in the unit shall be 0.36 seconds.

III. PRE-OPERATIONAL REQUIREMENTS

EMISSION TESTING

A detailed description of the sampling point locations, sampling equipment, and sampling and analytical procedures for the emissions tests shall be submitted for review and approval to the Chief, BTS, within 30 calendar days after the approval of this application for implementing the testing required by Condition IV.C and for determining compliance with the maximum allowable emissions of the contaminants specified in Condition IV.A.

IV. OPERATIONAL REQUIREMENTS

A. Maximum Allowable Air Contaminant Emission Limitations

1. The maximum post-control emission rates from the Catalytic Oxidizer stack shall not exceed the following:

Contaminant Name	Maximum Emissions with Control (lb/hr)
Trichloroethylene	0.0055
1,2-Dichloroethylene	0.02
Vinyl Chloride	0.0045
Hydrogen Chloride	2.2
Nitrogen Oxides	0.5
Total Volatile Organic Compounds	0.5

2. The maximum emission concentration of total hydrocarbons from the unit shall be 50 parts per million by volume (ppmv), as equivalent methane, dry basis, corrected to seven percent (7%) oxygen.
3. The maximum emission concentration for carbon monoxide from the unit shall be 100 ppmv, dry basis, corrected to 7% oxygen.

B. Operating Limitations

1. Air Stripper
   a. The maximum air flow to the stripper shall be 650 standard cubic feet per minute.
   b. The influent concentrations of the groundwater shall not exceed 100, 000 micrograms per liter (µg/l) of total volatile organic compounds, 18,000 µg/l of Trichloroethylene, 67,000 µg/l of 1,2-Dichloroethane, and 15,000 µg/l of Vinyl Chloride.
   c. The liquid flow rate to the air stripper shall not exceed 60 gallons per minute. The flow rate meter must be operated consistent with manufacturer's specifications.

C. Monitoring Requirements

1. Grab samples shall be taken prior to and after the Catalytic Oxidizer at minimum of the following intervals:

Day 1-7	Twice at least 24 hours apart
Days 7-30	Once per week

Month 2-Completion	Once per month

Grab Samples shall be analyzed using the TO-14 analysis method.

2. Photoionization Detector (PID) readings for total hydrocarbons and readings for oxygen shall be taken at a minimum at the following intervals:

Day 1	Once per hour for the first eight hours
Days 2-7	Once per day
Days 7-30	Twice per week
Days 31-Completion	Once per week

All of these readings shall be taken at the outlet of the Catalytic Oxidizer.

3. A continuous temperature monitor and recorder shall be installed at the point in the Catalytic Oxidizer which represents a 0.36 second residence time. The monitor and recorder shall be operated consistent with manufacturer's specifications.

D. General Prohibition of Air Pollution

The equipment in this permit shall not cause any air contaminant, including an air contaminant detectable by the sense of smell, to be present in the outdoor atmosphere in such quantity and duration which is, or tends to be, injurious to human health or welfare, animal or plant life or property, or would unreasonably interfere with the enjoyment of life or property, except in areas over which the owner or operator has exclusive use or occupancy.

E. Visible Emissions

At all times, visible emissions shall not exceed 20% opacity from the stack, exclusive of visible condensed water vapor, for more than three minutes in any thirty minute period.

F. Recordkeeping

Emissions monitoring data, the catalytic oxidizer temperature monitor readings, hourly flowrate readings and records of operating time shall be recorded in a log book and shall be maintained in a manner approved by the Regional Enforcement Office and made available for inspection by the Department for a period of five years after the date of each record.

G. Reporting Requirements

1. Data collected during the first seven days of monitoring, pursuant to Conditions IV.C.1 and IV.C.2, shall be reported to the Department within 7 business days of the last monitoring reading. It shall be reported to the Regional Enforcement Office and to the Chief, Bureau of Air Quality Engineering. Failure to report the data shall require operations to cease until such time as the data is reported and evaluated by the Department.
2. Any operation of the equipment which causes a release of air contaminant in a

quantity or concentrations which poses a potential threat to public health, welfare or the environment or which might unreasonably result in citizen complaints shall be reported immediately by the facility by calling the Hotline (609) 292-7172, in accordance with Air Pollution Act, N.J.S.A. 26:2C-19(e).

3. Any violation of a Condition of Approval shall be reported by telephone within 1 day and in writing within 3 business days to the Regional Enforcement Office.

H. Facility Inspection

Pursuant to N.J.A.C. 7:27-8.8(c) the equipment covered by this Permit and Certificate will be subject to fees for a maximum of 5 periodic compliance inspections over the life of the Certificate. The company will receive an invoice for a $200.00 service fee for each inspection, pursuant to N.J.A.C. 7:27-8.11, after the periodic compliance inspection is conducted. For any supplemental services that are provided to the company to conform with any of the stipulated requirements of this approval, additional fees will be chaged to the company in accordance with N.J.A.C. 7:27-8.11, Service Fees.

State of New Jersey

Christine Todd Whitman
Governor

Department of Environmental Protection
Bureau of Air Quality Engineering
Air Quality Permitting Program
New Jersey Department of Environmental Protection
CN 027
Trenton, New Jersey 08625

Robert C. Shinn, Jr.
Commissioner

July 25, 1996

Kenneth D. Smith
Environmental Coordinator
Naval Air Warfare Center
Aircraft Division Trenton
1440 Parkway Avenue
Trenton, New Jersey 08625

Re: Air Pollution Control (APC) Permit Conditions
Stack Designation: 0093
Plant Identification Number: 60014

Dear Mr. Smith:

This correspondence concerns the referenced APC Permit and Certificate, which was approved on May 22, 1996 for the remediation of groundwater using an air stripper. In your June 10, 1996 letter and subsequent submittals, it was requested that the following modifications be made to the permit.

1. That the wording of Conditions II.C.a, II.C.b, and IV.C.3 be changed..

2. That the maximum concentration of the inlet groundwater be modified (Condition IV.B.1.b).

At this time the Department grants the request. The modified operating conditions shall be revised as follows:

Condition II.C.a.
The maximum flow rate discharged at the stack shall be 1005 actual cubic feet per minute.

Condition II.C.b
The minimum temperature at the outlet of the catalyst bed shall be 600 degrees Fahrenheit.

Condition IV.B.1.b

i. Between 30 and 60 gallons per minute (gpm) the influent concentrations of groundwater shall not exceed 100,000 micrograms per liter (μg/L) of total volatile organic compounds, 18,000 μg/L of Trichloroethylene, 67,000 μg/L of 1,2-Dichloroethylene, and 15,000 μg/L of Vinyl Chloride.

ii. At or below 30 gpm, the influent concentrations of the groundwater shall not exceed

200,000 μg/L of total volatile organic compounds, 36,000 μg/L of Trichloroethylene, 134,000 μg/L of 1,2-Dichloroethylene, and 30,000 μg/L of Vinyl Chloride.

Condition IV.C.3
A continuous temperature monitor and recorder shall be recorded at the outlet of the catalyst bed. The monitor and recorder shall be operated consistent with manufacturer's specifications.

All other Conditions of Approval shall remain as written, shall apply, and are enforceable. If there are any questions, please call me at (609) 292-1995.

Sincerely,

Ann M. Ryan
Assistant Environmental Engineer
Bureau of Air Quality Engineering

c: I. Atay
MRO

State of New Jers

Christine Todd Whitman
Governor

Department of Environmental Pr
Bureau of Air Quality Engineeri
Air Quality Permitting Progran
New Jersey Department of Environmenta
CN 027
Trenton, New Jersey 08625

August 7, 1996

Kenneth D. Smith
Environmental Coordinator
Naval Air Warfare Center
Aircraft Division Trenton
1440 Parkway Avenue
Trenton, New Jersey 08625

Re: Air Pollution Control (APC) Permit Conditions
Stack Designation: 0093
Plant Identification Number: 60014

Dear Mr. Smith:

This correspondence concerns the referenced APC Permit and Certificate, which was approved on May 22, 1996 for the remediation of groundwater using an air stripper. In a July 31, 1996 letter from EA Engineering, it was requested that the type of portable monitor be modified.

At this time the Department grants the request. The modified operating conditions shall be revised as follows:

Condition IV.C.2.
A Portable monitor approved according to Condition III shall be used to take readings at a minimum at the following intervals:

Day 1	Once per hour for the first eight hours
Days 2-7	Once per day
Days 7-30	Twice per week
Days 31-Completion	Once per week

All of these readings shall be taken at the outlet of the Catalytic Oxidizer.

All other Conditions of Approval shall remain as written, shall apply, and are enforceable. If there are any questions, please call me at (609) 292-1995.

Sincerely,

Ann M. Ryan
Assistant Environmental Engineer
Bureau of Air Quality Engineering

c: I. Atay
CRO

NEW JERSEY STATE DEPARTMENT OF ENVIRONMENTAL PROTECTION

DIVISION OF ENVIRONMENTAL QUALITY
AIR POLLUTION CONTROL PROGRAM

All Correspondence must indicate your APC PLANT ID NUMBER

Certificate Number 126774 LOG NUMBER 960669A APC PLANT ID 60014

(Mailing Address)

NAVAL AIR PROPULSION CENTER
P O BOX 7176
TRENTON NJ 08628

(Plant Location)

PARKWAY AVENUE
EWING TWP

Applicant's Designation of Equipment 0093 (AIR STRIPPER)
N.J. Stack No. 091 No. of Stacks 001 No. of Sources 01
Approval Effective 08/20/96 Expiration 11/17/96

TEMPORARY CERTIFICATE TO OPERATE CONTROL APPARATUS OR EQUIPMENT

* CONDITIONAL *

THIS TEMPORARY CERTIFICATE IS BEING ISSUED UNDER THE AUTHORITY OF CHAPTER 106, P.L. 1967 (N.J.S.A.26:2C-9.2). THE TEMPORARY CERTIFICATE WILL ALLOW FOR INSPECTION AND EVALUATION TO ASSURE CONFORMANCE WITH ALL PROVISIONS OF THE NEW JERSEY ADMINISTRATIVE CODE, TITLE 7, CHAPTER 27. BASED ON THIS EVALUATION, STACK TESTS MAY BE REQUIRED IN ACCORDANCE WITH N.J.A.C. 7:27-8.4(C).

THE EQUIPMENT COVERED BY THIS CERTIFICATE MAY BE SUBJECT TO PERIODIC COMPLIANCE INSPECTIONS, PURSUANT TO N.J.A.C. 7:27-8.8(C). YOU WILL BE INVOICED FOR A $200 FEE AFTER EACH PERIODIC COMPLIANCE INSPECTION. YOU WILL NOT BE INVOICED FOR AN INSPECTION DURING WHICH A 5 YEAR APPROVAL DETERMINATION IS MADE. YOU MAY BE INVOICED FOR FEES FOR OTHER SERVICES THAT ARE PERFORMED BY THE DEPARTMENT PURSUANT TO CONDITIONS OF APPROVAL.

IF THE DEPARTMENT IS SOLELY RESPONSIBLE FOR BEING UNABLE TO INSPECT THIS EQUIPMENT IN OPERATION AS PERMITTED DURING THIS 90-DAY PERIOD, THIS TEMPORARY CERTIFICATE WILL BE EXTENDED AUTOMATICALLY. HOWEVER, IF YOU ARE RESPONSIBLE FOR THE DEPARTMENT'S BEING UNABLE TO INSPECT, E.G., NOT NOTIFYING THE DEPARTMENT WHEN THIS EQUIPMENT OR PROCESS IS IN OPERATION, THIS CERTIFICATE MAY NOT BE EXTENDED AND YOU WILL BE NOTIFIED BY THE DEPARTMENT THAT YOU MUST APPLY FOR AND OBTAIN AN EXTENSION AUTHORIZING YOU TO CONTINUE TO OPERATE THE EQUIPMENT. THE DEPARTMENT RESERVES THE RIGHT TO WITHHOLD ANY EXTENSION OF THIS TEMPORARY CERTIFICATE, IN WHICH EVENT YOU WILL BE NOTIFIED THAT YOU MUST APPLY FOR AND OBTAIN AN EXTENSION AUTHORIZING YOU TO CONTINUE TO OPERATE AFTER THE EXPIRATION DATE OF THIS CERTIFICATE.

IN ACCORDANCE WITH N.J.A.C. 7:27-8.3(D), THIS CERTIFICATE MUST BE READILY AVAILABLE FOR INSPECTION ON THE OPERATING PREMISES.

PLEASE REFER TO YOUR INITIAL PERMIT APPROVAL FOR OPERATING CONDITIONS.

Approved by: Donald Patterson

AUG 26 RE

CRO

08/13/96-51

August 9, 1996

TO: D. Kopcow

FROM: D. Ghayal

SUBJECT: PUMP AND TREAT, NAWC TRENTON (DELIVERY ORDER 009)
EQUIPMENT FOR AIR QUALITY PERMIT COMPLIANCE MONITORING

NAVY is required to monitor emission rates using "Grab Sample" method as specified in permit condition IV.C.1 and using "PID" as specified in condition IV.C.2. The grab sample testing will be performed by the subcontractor using their own equipment. The emission monitoring using "PID" will be performed by FWENC. A list of equipment required for the monitoring purpose is as follows:

(1) Photoionization Detector (PID) - to measure total hydrocarbons in the exhaust gas
(2) Oxygen Indicator - to measure % oxygen in the exhaust gas
(3) Air Velocity and Temperature Meter - to measure exhaust gas flow rate and temperature.

Enclosed is a copy of PID, Oxygen Analyzer and Air Velocity and Temperature Meter specification. If any questions arise, call me at X4010.

PID

New!

IMPROVED HEADSPACE ANALYSIS OF VOCs IN SOIL AND WATER for Thermo Environmental Instruments' Model 580B Portable OVM

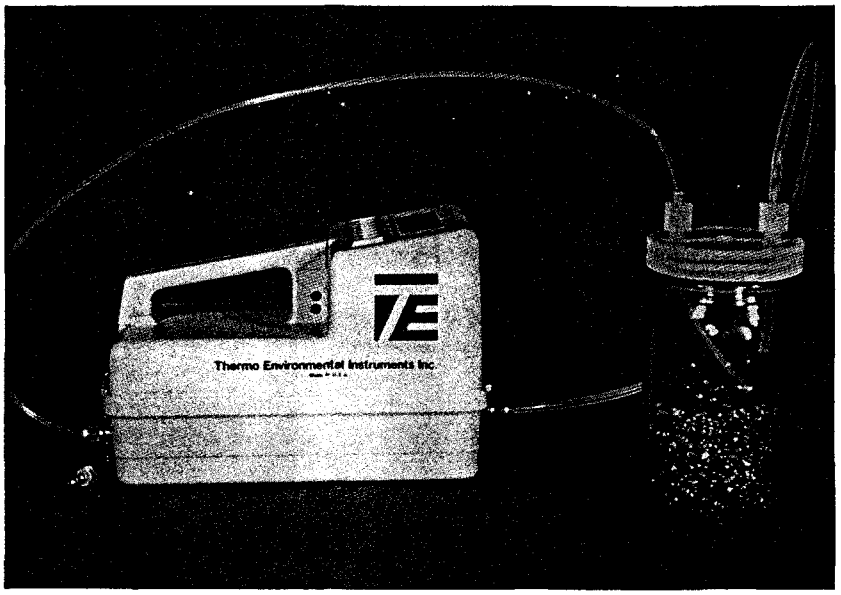

The positive displacement pump of the 580B OVM provides for recirculation of headspace VOCs and increased accuracy over the conventional aluminum foil technique.

580B ver. 1.1
09/11/90 1508
Instrument #580000
User I.D. #014569373
Operating Mode: Conc. Meter, Max Hold

		LOC.	PPM	STATUS
09/11/90	1508	000001	0012	
09/11/90	1509	000002	0010	
09/11/90	1510	000003	0061	
09/11/90	1511	000004	0104	ALARM
09/11/90	1512	000005	0076	

RS-232 output provides hardcopy generation of headspace analysis results. Individual sample measurements can be collected and stored by date, time, location, and alarm status.

The Model 580B Portable Organic Vapor Meter (OVM) used in conjunction with a unique teflon cap assembly offers environmental engineers a new and improved headspace analysis technique.

By creating a closed loop between the sample (Mason Jar Headspace) and the Model 580B OVM, there is:

- No dilution of headspace during measurement
- Increased reproducibility from sample to sample
- Development of a concentration equilibrium resulting in a more accurate VOC measurement

Some additional features which make the 580B a useful instrumental tool in the detection of soil and groundwater contamination include:

- Single handed, portable operation for eight hours off a single battery charge
- Auto calibration routine for quick and simple instrument calibration
- User settable alarm levels signaled by display message and audible alarm
- Real-time display updating of measured maximum concentration value

Ordering Information

Model 580B Portable Organic Vapor Meter
Includes built-in data logger, sample probe, RS-232 communications cable, lamp cleaner kit, shoulder strap, battery charger, earphones, 10.0 or 10.6 eV lamp, and 10 micron sample filters.

Model 580S Intrinsically Safe (CENELEC Approved) Portable Organic Vapor Meter
Complete with accessory items listed above.

Recommended Options

Teflon Cap Assembly — Option 009

Carrying Case — Option 004

Calibration Kit — Option 006

For Price and Delivery Information, Contact:

Thermo Environmental Instruments Inc.

8 West Forge Parkway
Franklin, MA 02038

(508) 520-0430
Telex: 200205 THEMO UR

FAX: (508) 520-1460

LOWER HALF

The lower half of your GT has the following primary external components:

- Inlet Fitting (including hose and probe)
- RS-232 mini-DIN Data Connector
- NI-Cd Battery Charger Jack
- Exhaust Fitting with Restrictor

These components are described in the following paragraphs.

Inlet Fitting

The inlet fitting is the point of connection for the external hose. The hose and probe are described under this section, since these are commonly used with the GT.

Hose

The GT Series gas monitor is supplied with a standard 5-foot polyurethane hose that includes quick disconnect fittings. When sampling from a deeper source, longer lengths of hose (up to a maximum of 50 feet) are available.

The polyurethane-lined hose is satisfactory for most samples, such as natural gas, propane, hydrogen, and gasoline vapors. Some complex hydrocarbons, like styrene, tend to be absorbed into the walls of the standard hose. If sampling such compounds, your response may be slower. This is a sign that the sample has been partially absorbed into the hose. Allow sufficient sampling time for the reading to stabilize if sampling these types of compounds.

O2 Analyzer

Probe

The standard probe for the GT Series gas monitor is 10 inches long. It includes a hydrophobic filter that prevents liquid water from being drawn into the monitor, even if the probe is immersed. Inspect the hydrophobic filter frequently. Replace it periodically or when it becomes discolored.

An optional 30-inch probe is available for frequent testing at ground level, in maintenance holes, or in tanks.

SPECIFICATIONS

Table 1-1 lists specifications for the 300 Series of GT Series gas monitor.

Table 1-1 Specifications for the GT 300 Series Monitor

Gases Detected	**Oxygen** (0-30.0% VOL in 0.1% increments) (1) **PPM Hydrocarbons** (0-10,000 ppm in 20 ppm increments) **Combustibles** (0-100% LEL in 1% increments) (2) **Hydrogen Sulfide** (0-200 ppm in 1 ppm increments - GT 302) **Carbon Monoxide** (0-300 ppm in 1 ppm increments - GT 303)
Sensor	Oxygen: Electrochemical Combustibles: Catalytic compensated Hydrogen Sulfide: Electrochemical (GT 302) Carbon Monoxide: Electrochemical (GT 303)
Intrinsic Safety Rating	Class I, Division 1, Groups A, B, C, and D
Sampling Method	Sample-drawing
Response Time	Initial: 5 seconds average (with 5 foot hose) 90% complete within 20 seconds

Does both of your parameters.

GASTECH
8407 CENTRAL AVE.
NEWARK CA 94560-3431
(510) 794-6200 (P)
794-6210 (Fax)

08/08/96 11:49 CHEVRON PRODUCTS CO BLDG → 215 702 4045 NO.033 002

Table 1-1 Specifications for the GT 300 Series Monitor (Continued)

Accuracy	H_2S, CO, LEL/ppm: ±10% of full scale reading; O_2: ±0.5% by volume.
Repeatability	H_2S, CO: ±5%; LEL/ppm: ±2% of full scale reading; O_2: ±0.2% by volume.
Operating temperature	-4°F (-20°C) to 113°F (45°C)
Humidity	0 to 95% relative humidity (RH), non-condensing
Regulatory Approvals	UL, CSA (agency classifications pending at the time of this printing)
Alarms	Audible/visible, coded for gas and trouble. Also a comfort beep that can be turned off.
Alarm Actions	Pump off, low battery, rising combustible reading, rising or falling O_2 reading, rising CO or H_2S reading, rising TWA and STEL reading, sensor failure.
Alarm Functions	Alarm levels are software-selectable by user.
Display	Digital liquid crystal display (LCD). Displays up to four different gases at a time. A back light is available on demand.
Power Source	Four "D" size alkaline or NI-Cd batteries.
Battery life	10 hours (20°C) (Due to the nature of alkaline cells, battery life is greatly reduced at low temperatures, and may be less than 2 hours at -15°C. NI-Cd batteries are recommended for low temperature applications.)
Controls	**ON/OFF** (power) button, **RESET** button, **FUNC./+** display option button, **BACK LITE/-** display option button, **ADJUST/ENTER** button, and **LEL/PPM** readout button.

Table 1-1 Specifications for the GT 300 Series Monitor (Continued)

Dimensions	10 in. L x 5 in. W x 6 in. H
Weight	Approximately 5 pounds.
Case	High-impact, chemical resistant polycarbonate-polyester plastic with RF-resistant coating.
Standard Accessories	Carrying strap, hose, probe (with hydrophobic filter), operator's manual(s)/quick reference card.
Optional Accessories	Confined space kit (CSK), dilution fitting, carrying case, extra length hose, 30 in. probe, battery chargers (220 VAC, 115 VAC), auxiliary hydrophobic filter, and data retrieval package (5.25 and 3.50 in. diskettes, operator's manual, and associated cable).

08/08/96 11:49 CHEVRON PRODUCTS CO BLDG → 215 702 4045 NO.033 003

DAVIS

INDUSTRIAL/COMMERCIAL PRODUCTS

100-VT Air Velocity/ Temperature Mete

OPERATING INSTRUCTIONS

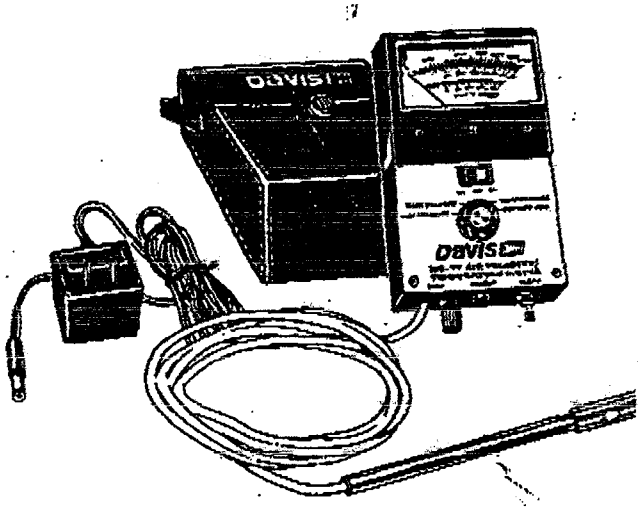

Davis Instruments
3465 Diablo Ave., Hayward, CA 94545, U.S.A. • (415) 732-9229
Cable: DAVIS, Hayward, CA • Telex: 172149 (DAVIS HYWD) • FAX: 4157329188

© 1991 Davis Instruments Corporation
2nd Edition

Printed in U.S.A.

P.03
08.08.1996 09:05
FROM

B. Specifications:

100-VT full scale accuracy is ±5%.

		English	Metric
Velocity Measurement Ranges	Low	0 to 600 FPM	0 to 3 m/sec
	High	600 to 6000 FPM	3 to 30 m/sec
Temperature Measurement Range		- 50°F to + 210°F	-40°C to + 100°C
Meter Ambient Temperature Range		+ 40°F to +150°F	+ 5°C to + 65°C
Meter Size		6 9/16"L x 3 1/4"W x 2 3/4"H	173mm x 95mm x 70mm
Meter Weight		1 lb. 10 oz.	.74 Kg
Probe Size	Diameter	3/8 in.	9.5mm
	Length (including sensor)	7 5/8 in.	194mm
Cable Length		8'2"	2.5m

Sensor Materials exposed to fluid medium: 300-series stainless steel, Kel-F.

Power Requirements

Ni-Cad Battery (meter input): 12 VDC, 0.5 amp-hour capacity.

Battery Recharger: 115 VAC or 230 VAC, 50-60 Hz, depending on model. Output: 15 VDC @ 120 ma.

Normal time for continuous battery operation: 4 to 7 hours.

Nominal time required to recharge fully discharged batteries: 4 hours.

NOTE: Meter may be operated through recharger during recharging of batteries.

Measurement Scales	Charger Voltage	Model Number
FPM and Degrees F.	115 VAC	9110
FPM and Degrees F.	230 VAC	9120
M/S and Degrees C.	115 VAC	9130
M/S and Degrees C.	230 VAC	9140

II. OPERATION

A. Before Operating:

1. With power off, check that meter reads exactly zero. If not, use a screwdriver and adjust the black screw on the face of the meter.
2. Check for adequate battery charge by turning Function Switch to BATTERY CHECK position and turning power on (rocker switch depressed either right or left)

and noting if pointer is in BATTERY OK zone. If not, connect recharger to unit until charged. Note: unit may be operated while recharging.

3. Check that meter reads zero when air velocity is zero as follows: Set Function Switch on LOW VELOCITY, turn power on and cover tip completely with shield. Hold probe horizontal with scribed line down and set meter reading to exactly zero by means of zero knob (see Figure 3, below). If zero knob has insufficient range, recenter zero knob and use a small screwdriver to turn adjusting screw located through small hole on left above zero knob. Turn clockwise to move pointer to left. Once the screwdriver adjustment has been made, the zero knob should be able to handle all future zero adjustments.

B. Air Velocity Measurement:

Remove shield from probe tip. Position the probe perpendicular to the air stream with the scribed line of probe downstream from the direction of air flow. With power switched on, and the Function Switch set to the velocity range desired, rotate the probe +/- 30 degrees from original orientation until a peak reading is obtained. At this point you will read the correct air velocity.

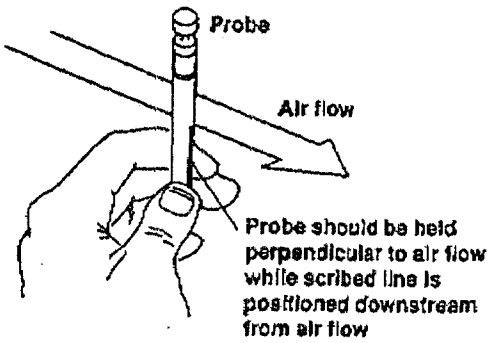

Figure 1.

CHAPTER 1.0 - ATTACHMENT 4
MATERIAL SAFETY DATA SHEETS

- Vinyl Chloride
- Trichloroethylene (Trichloroethene)
- 1,2-cis-Dichloroethylene
- Caustic (Sodium Hydroxide)
- Sulfuric Acid
- Polymer/Flocculant (Magnifloc 1883A)
- Trichloroethylene - GC Standard
- 1,2-cis-Dichloroethene - GC Standard
- Vinyl Chloride - GC Standard
- Helium (compressed gas)
- Methyl Alcohol (Methanol)
- Nitric Acid

Material Safety Data Sheet

From Genium's Reference Collection
Genium Publishing Corporation
1145 Catalyn Street
Schenectady, NY 12303-1836 USA
(518) 377-8855

GENIUM PUBLISHING CORP.

No. 382

VINYL CHLORIDE
(Revision A)
Issued: August 1978
Revised: August 1988

SECTION 1. MATERIAL IDENTIFICATION

Material Name: VINYL CHLORIDE

Description (Origin/Uses): Widely used to make PVC resins and plastics; also used in organic synthesis.

Other Designations: VCM; Vinyl Chloride Monomer; Chloroethylene; Chloroethene; C_2H_3Cl; CAS No. 0075-01-4

NFPA

Manufacturer: Contact your supplier or distributor. Consult the latest edition of the *Chemicalweek Buyers' Guide* (Genium ref. 73) for a list of suppliers.

HMIS

H 2	R 1
F 4	I 4
R 1	S 3
PPG*	K 4

*See sect. 8

SECTION 2. INGREDIENTS AND HAZARDS	%	EXPOSURE LIMITS
Vinyl Chloride, CAS No. 0075-01-4	Ca 100	**OSHA PEL** 8-Hr TWA: 1 ppm* **ACGIH TLV, 1987-88** TLV-TWA: 5 ppm, 10 mg/m³ **Toxicity Data**** Rat, Oral, LD_{50}: 500 mg/kg

*The action level set by OSHA in 29 CFR 1910.1017 is 0.5 ppm. Exposures above this level are strictly regulated by extensive medical record keeping, reporting, surveillance, and other requirements. Consult 29 CFR 1910.1017 for details.

**See NIOSH, *RTECS* (No. KU9625000), for additional data with references to mutagenic, reproductive, and tumorigenic effects.

SECTION 3. PHYSICAL DATA

Boiling Point: 61°F (16°C)
Water Solubility (%): Insoluble
Molecular Weight: 107 Grams/Mole
Vapor Density (Air = 1): 2.2

Appearance and Odor: A colorless gas; mild, sweet odor at high concentrations.

SECTION 4. FIRE AND EXPLOSION DATA

Flash Point and Method	Autoignition Temperature	Flammability Limits in Air	LOWER	UPPER
-108.4°F (-78°C)	882°F (472°C)	% by Volume	3.6%	33%

Extinguishing Media: Vinyl chloride gas is a severe fire and explosion hazard; treat any fire involving it as an emergency. Try to shut off the flow of gas. Use a water spray to protect the personnel attempting this and to cool fire-exposed cylinders/containers of vinyl chloride.

Unusual Fire or Explosion Hazards: This heavier-than-air gas can flow along surfaces, reach distant sources of ignition, and flash back. Eliminate sources of ignition in the workplace, particularly in low-lying areas such as sumps, cellars, basement utility rooms, and underground piping systems.

Special Fire-fighting Procedures: Wear a self-contained breathing apparatus (SCBA) with a full facepiece operated in the pressure-demand or positive-pressure mode.

SECTION 5. REACTIVITY DATA

Vinyl chloride is stable in closed, airtight, pressurized containers at room temperature under normal storage and handling conditions. It can undergo hazardous polymerization if it is heated or reacted with a polymerization catalyst, or if the concentration/activity of the added inhibitor becomes too low.

Chemical Incompatibilities: This material is incompatible with copper, aluminum, and other polymerization catalysts or free radical initiators like hydroquinone.

Conditions to Avoid: Do not allow sources of ignition such as open flame, unprotected heaters, lighted tobacco products, electric sparks, or excessive heat in work areas. Avoid prolonged exposure to air, especially in the presence of certain contaminants, because dangerous levels of polyperoxides may accumulate. Avoid exposure to sunlight; if the proper catalytic conditions occur, the vinyl chloride monomer may react with itself and undergo an explosive polymerization reaction. Violent ruptures of containers of this gas can occur.

Hazardous Products of Decomposition: During fires, vinyl chloride may decompose into toxic gases such as hydrogen chloride, carbon monoxide, and phosgene.

Copyright © 1988 Genium Publishing Corporation.
Any commercial use or reproduction without the publisher's permission is prohibited.

SECTION 6. HEALTH HAZARD INFORMATION

Vinyl chloride is listed as a carcinogen by the ACGIH, NTP, and IARC with sufficient epidemiological evidence from human studies.

Summary of Risks: Vinyl chloride depresses the central nervous system (CNS), causing effects that resemble mild alcohol intoxication; however, these effects can progress to narcosis, eventual collapse, and even death as the intensity and/or duration of the exposure continues. Thrombocytopenia (decrease in blood platelets) has been reported following exposures.

Medical Conditions Aggravated by Long-Term Exposure: Possible liver effects. **Target Organs:** Respiratory system, skin, eyes, kidneys, hematopoietic (blood) system, and musculoskeletal system. **Primary Entry:** Inhalation. **Acute Effects:** Headache, dizziness, lightheadedness, skin and eye irritation. **Chronic Effects:** Cancer, especially angiosarcoma of the liver.

FIRST AID: Eyes. Immediately flush eyes, including under the eyelids, gently but thoroughly with plenty of running water for at least 15 minutes. **Skin.** Skin contact with liquid vinyl chloride causes frostbite (cryogenic injury). Treat this accordingly. **Inhalation.** Remove the exposed person to fresh air; restore and/or support his or her breathing as needed. **Ingestion.** Unlikely.

GET MEDICAL HELP (IN PLANT, PARAMEDIC, COMMUNITY) FOR ALL EXPOSURES. Seek prompt medical assistance for further treatment, observation, and support after first aid.

SECTION 7. SPILL, LEAK, AND DISPOSAL PROCEDURES

Spill/Leak: *Treat any vinyl chloride gas leak as an emergency.* Preplan emergency responses and make sure all personnel know about them. Notify safety personnel, evacuate all nonessential personnel, provide maximum explosion-proof ventilation, and eliminate all sources of ignition immediately. Make sure cleanup personnel have protection against contact with this material and inhalation of its vapor (see sect. 8). **Waste Disposal:** Contact your supplier or a licensed contractor for detailed recommendations for disposal. Follow Federal, state, and local regulations.

OSHA Designations

Air Contaminant (29 CFR 1910.1000 Subpart Z)

Vinyl chloride is specifically regulated by OSHA at 29 CFR 1910.1017 as a suspected carcinogenic agent.

EPA Designations (40 CFR 302.4)

RCRA Hazardous Waste, No. U043

CERCLA Hazardous Substance, Reportable Quantity: 1 lb (0.454 kg), per Clean Water Act (CWA), section 307 (a); Clean Air Act (CAA), section 112; and Resource Conservation and Recovery Act (RCRA), section 3001.

SECTION 8. SPECIAL PROTECTION INFORMATION

Goggles: Always wear protective eyeglasses or chemical safety goggles. Follow OSHA eye- and face-protection regulations (29 CFR 1910.133). **Respirator:** Consult the *NIOSH Pocket Guide to Chemical Hazards* for general recommendations on respirators. Follow OSHA respirator regulations (29 CFR 1910.134). For emergency or nonroutine use (leaks or cleaning reactor vessels and storage tanks), wear an SCBA with a full facepiece operated in the pressure-demand or positive-pressure mode. **Warning:** Air-purifying respirators will *not* protect workers in oxygen-deficient atmospheres. **Other:** Wear impervious gloves; boots; aprons; head covers; and clean, impervious, body-covering clothing to prevent any possibility of skin contact with vinyl chloride. All clothing must be flame resistant. **Ventilation:** Install and operate general and local ventilation systems powerful enough to maintain airborne levels of vinyl chloride below the OSHA PEL standard cited in section 2. All ventilation systems must be of maximum explosion-proof design, e.g., nonsparking, electrically grounded and bonded. **Safety Stations:** Make eyewash stations, safety showers, and washing facilities available in areas of use and handling. **Contaminated Equipment:** Contact lenses pose a special hazard; soft lenses may absorb irritants and all lenses concentrate them. Do *not* wear contact lenses in any work area. **Other:** Design all engineering systems to be explosion-proof in areas where vinyl chloride gas may occur. Pressure check all pipes and equipment used with this gas and make sure that all connections are leak tight. **Comments:** Practice good personal hygiene; always wash thoroughly after using this material. Avoid transferring it from your hands to your mouth while eating, drinking, or smoking. Do *not* eat, drink, or smoke in any work area.

SECTION 9. SPECIAL PRECAUTIONS AND COMMENTS

Storage/Segregation: Store vinyl chloride in a cool, dry, well-ventilated area away from sources of ignition and incompatible chemicals. Outside or detached storage is recommended. Shade containers from radiant heat and direct sunlight. **Special Handling/Storage:** Vinyl chloride is shipped/stored as a pressurized gas in cylinders or tank cars. Protect these containers against physical damage and regularly inspect them for cracks, leaks, or faulty valves. Ground and bond all containers used in shipping/transferring operations. Store cylinders upright; secure them tightly; do not drag or slide them; move them in a carefully supervised manner with a suitable hand truck. Monitor the activity and concentration of the added inhibitor to the vinyl chloride product. Follow your supplier's recommendations concerning proper shelf life, rotation of inventory, and maintenance of purity. **Engineering Controls:** Make all engineering systems (ventilation, production, etc.) of maximum explosion-proof design. **Comments:** Perform all operations with vinyl chloride carefully to prevent accidental ignition. Do not smoke in any use or storage area. Maintain the valve protection cap in place until immediately before using vinyl chloride. Insert a check valve or trap into the transferral line to prevent a dangerous backflow into the original container. Use pressure-reducing regulators when connecting cylinders to lower-pressure piping systems. Obtain detailed handling, shipping, and storage information from your supplier. A trained chemist or safety specialist familiar with the physical and chemical properties of this material should be present during all work operations.

Transportation Data (49 CFR 172.101-2)

DOT Shipping Name: Vinyl Chloride	**DOT Label:** Flammable Gas	**IMO Label:** Flammable Gas
DOT ID No. UN1086	**DOT Hazard Class:** Flammable Gas	**IMO Class:** 2.1

References: 1, 2, 12, 73, 84-94.

Judgments as to the suitability of information herein for purchaser's purposes are necessarily purchaser's responsibility. Therefore, although reasonable care has been taken in the preparation of such information, Genium Publishing Corp. extends no warranties, makes no representations and assumes no responsibility as to the accuracy or suitability of such information for application to purchaser's intended purposes or for consequences of its use.

Prepared by PJ Igoe, BS

Industrial Hygiene Review: DJ Wilson, CIH

Medical Review: MJ Hardies, MD

Copyright © 1988 Genium Publishing Corporation.
Any commercial use or reproduction without the publisher's permission is prohibited.

Material Safety Data Sheet

From Genium's Reference Collection
Genium Publishing Corporation
1145 Catalyn Street
Schenectady, NY 12303-1836 USA
(518) 377-8855

GENIUM PUBLISHING CORP.

No. 312
TRICHLOROETHYLENE
(Revision E)

Issued: July 1979
Revised: August 1987

SECTION 1. MATERIAL IDENTIFICATION

MATERIAL NAME: TRICHLOROETHYLENE

DESCRIPTION (Origin/Uses): Prepared from *sym*-tetrachloroethane by way of eliminating HCl by boiling with lime. Used to manufacture organic chemicals, pharmaceuticals; in degreasing and dry cleaning; and as a solvent for fats, waxes, rubbers, oils, paints, varnishes, ethers, and cellulose esters.

OTHER DESIGNATIONS: Ethylene Trichloride; TCE; Trichloroethene; 1,1,2-Trichloroethylene; C_2HCl_3; NIOSH *RTECS* #KX4550000; CAS #0079-01-6

MANUFACTURER/SUPPLIER: Available from several suppliers, including: Dow Chemical USA, 2020 Dow Center, Midland, MI 48640; Telephone: (517) 636-1000; (800) 258-CHEM

COMMENTS: Trichloroethylene is a toxic solvent and a suspected occupational carcinogen.

HMIS	
H	2
F	1
R	1
PPE*	
* See sect. 8	
R	1
I	3
S	1
K	0

SECTION 2. INGREDIENTS AND HAZARDS

	%	HAZARD DATA
Trichloroethylene, CAS #0079-01-6; NIOSH *RTECS* #KX4550000	100	ACGIH Values 1987-88 TLV-TWA*: 50 ppm, 270 mg/m^3 TLV-STEL**: 200 ppm, 1080 mg/m^3 OSHA PEL 1986*** 8-Hr TWA: 100 ppm Ceiling: 200 ppm NIOSH REL 1986 10-Hr TWA: 25 ppm TOXICITY DATA Human, Oral, LD_{Lo}: 7 g/kg Human, Inhalation, TC_{Lo}: 6900 mg/m^3 (10 Min) Human, Inhalation, TC_{Lo}: 160 ppm/ 83 Min Human, Inhalation, TD_{Lo}: 812 mg/kg

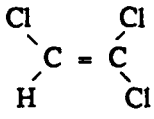

* The TLV-TWA is set to control subjective complaints such as headache, fatigue, and irritability.

** The TLV-STEL is set to prevent incoordination and other beginning anesthetic effects from TCE. These levels should provide a wide margin of safety in preventing liver injury.

*** The OSHA PEL is 300 ppm for 5 minutes in any 2 hours.

SECTION 3. PHYSICAL DATA

Boiling Point ... 188.6°F (87°C)
Vapor Pressure ... 58 Torr at 68°F (20°C)
Water Solubility ... Insoluble
Vapor Density (Air = 1) ... 4.53
Evaporation Rate ... Not Listed
Specific Gravity ... 1.4649 at 68°F (20°C)
Melting Point ... -120.64°F (-84.8°C)
Molecular Weight ... 131.40 Grams/Mole

Appearance and odor: Colorless, nonflammable mobile liquid; sweetish odor like chloroform.

COMMENTS: TCE is highly soluble in lipids. A high vapor pressure at room temperature provides the potential for TCE vapors to contaminate use areas.

SECTION 4. FIRE AND EXPLOSION DATA

Flash Point and Method	Autoignition Temperature	Flammability Limits in Air	LOWER	UPPER
Not Listed	770°F (410°C)	% by Volume	8%	10.5%

EXTINGUISHING MEDIA: TCE has no flash point in a conventional closed tester at room temperature, but it is moderately flammable at higher temperatures. Use dry chemical, carbon dioxide, alcohol foam, or other extinguishing agents suitable for the surrounding fire.

OSHA Flammability Class (29 CFR 1910.106): Not Regulated

UNUSUAL FIRE/EXPLOSION HAZARDS: During fire conditions TCE emits highly toxic and irritating fumes, including hydrochloric acid and phosgene. SPECIAL FIRE-FIGHTING PROCEDURES: Wear a self-contained breathing apparatus with a full facepiece operated in a pressure-demand or another positive-pressure mode. At TCE vapor levels of 300-1000 ppm, fire fighters who lack the proper respiratory equipment may experience incoordination and impaired judgment.

DOT Flammability Class (49 CFR 173.115): Not Regulated

SECTION 5. REACTIVITY DATA

Trichloroethylene is stable. Hazardous polymerization can occur under certain circumstances (see Conditions to Avoid and Comments, below).

CHEMICAL INCOMPATIBILITIES include magnesium or aluminum powder, NaOH, KOH, or other strong alkaline materials. Reactions with alkaline materials may lead to the formation of dangerous explosive mixtures of chloroacetylenes.

CONDITIONS TO AVOID: When TCE is heated (as in the case with vapor degreasers) or exposed to sunlight, it requires extra stabilization against oxidation, degradation, and polymerization. It is slowly decomposed by light when moist.

PRODUCTS OF HAZARDOUS DECOMPOSITION include hydrochloric acid and phosgene under certain conditions at elevated temperatures.

COMMENTS: TCE is stable under normal handling and storage conditions, and hazardous polymerization is not expected to occur. However, failure of the stabilizer at elevated temperatures or other extreme conditions may allow polymerization to take place..

Copyright © 1987 Genium Publishing Corporation

SECTION 6. HEALTH HAZARD INFORMATION

Trichloroethylene is listed as a carcinogen by the NTP, IARC, and OSHA. NIOSH recommends that trichloroethylene be treated as an occupational carcinogen. IARC carcinogenic results are animal suspect, animal positive, and human indefinite. SUMMARY OF RISKS: Moderate exposures to TCE cause symptoms similar to those of alcohol inebriation. Higher concentrations cause narcotic effects. Ventricular fibrillation has been cited as the cause of death following heavy exposures. TCE-induced hepato cellular carcinomas have been detected in mice during tests conducted by the National Cancer Institute (*Chem & Eng News* 54 [April 5, 1976]:4). Organ systems affected by overexposure to TCE are the central nervous system (euphoria, analgesia, anesthesia), degeneration of the liver and kidneys, the lungs (tachypnea), heart (arrhythmia) and skin (irritation, vesication, and paralysis of fingers when immersed in liquid TCE). Contact with the liquid defats the skin, causing topical dermatitis. Certain people appear to experience synergistic effects from TCE exposure concomitant with exposure to caffeine, alcohol, and other drugs. When combined with alcohol intake, toxic effects are increased and may cause a red, blotchy facial and upper body rash commonly called "degreaser's flush." Other reported symptoms of TCE exposure include abnormal fatigue, headache, irritability, gastric disturbances, and intolerance to alcohol. Toxic effects from testing of TCE on humans include hallucination, distorted perception, somnolence (general depressed activity), and jaundice. TARGET ORGANS: Respiratory system, central nervous system, heart, liver, kidneys, and skin. PRIMARY ENTRY: Ingestion, inhalation, skin contact. ACUTE EFFECTS: Headache, vertigo, visual disturbance, tremors, nausea, vomiting, dermatitis, dizziness, drowsiness, and irritation to the eyes, nose, and throat. CHRONIC EFFECTS: None Reported. MEDICAL CONDITIONS AGGRAVATED BY LONG-TERM EXPOSURE: Diseases of the liver, kidneys, lungs, and central nervous system. FIRST AID: EYE CONTACT: Immediately flush eyes, including under the eyelids, gently but thoroughly with plenty of running water for at least 15 minutes. Get medical help.* SKIN CONTACT: Wash thoroughly with soap and water. Remove and launder contaminated clothing before wearing it again; clean material from shoes and equipment. Get medical help.* INHALATION: Remove victim to fresh air; restore and/or support his breathing as needed. Do not give adrenalin to the victim. Get medical help.* INGESTION: Call a poison control center. Never give anything by mouth to someone who is unconscious or convulsing. A professional decision regarding whether or not to induce vomiting is required. Do not give adrenalin to the victim. Get medical help.*

*GET MEDICAL ASSISTANCE = IN PLANT, PARAMEDIC, COMMUNITY. Get prompt medical assistance for further treatment, observation, and support after first aid.

COMMENTS: Workers' responses to TCE vary significantly because of many factors, including age, health status, nutrition, and intake of alcohol, caffeine, and medicines. Do not use these substances before, during, or after exposure to TCE. If a worker displays any of the symptoms of exposure to TCE, thoroughly investigate all the possible contributing factors to determine, if possible, how much the work environment levels of TCE are responsible.

SECTION 7. SPILL, LEAK, AND DISPOSAL PROCEDURES

SPILL/LEAK: Inform safety personnel of any trichloroethylene spill or leak and evacuate the area for large spills. Cleanup personnel must use respiratory and liquid contact protection. Adequate ventilation must be provided. Confine the spilled TCE to as small an area as possible. Do not allow it to run off to sewers or open waterways. Pick up spilled TCE with a vacuum cleaner or an absorbent such as vermiculite.

DISPOSAL: Consider reclamation, recycling, or destruction rather than disposal in a landfill.

Trichloroethylene is designated as a hazardous substance by the EPA (40 CFR 116.4).

Trichloroethylene is reported in the 1983 EPA TSCA Inventory.

EPA Hazardous Waste Number (40 CFR 261.33): U228

EPA Reportable Quantity (40 CFR 117.3): 1000 lbs (454 kgs)

Aquatic Toxicity Rating, TLm 96: Not Listed

SECTION 8. SPECIAL PROTECTION INFORMATION

GOGGLES: Always wear protective eyeglasses or chemical safety goggles. Follow the eye and face protection guidelines of 29 CFR 1910.133. GLOVES: Wear impervious gloves. RESPIRATOR: Use a NIOSH-approved respirator per the *NIOSH Guide to Chemical Hazards* (Genium ref. 88) for the maximum-use concentrations and/or the exposure limits cited in section 2. Follow the respirator guidelines in 29 CFR 1910.134. Any detectable concentration of TCE requires an SCBA, full facepiece, and pressure-demand/positive-pressure modes. WARNING: Air-purifying respirators will not protect workers from oxygen-deficient atmospheres. OTHER EQUIPMENT: Wear rubber boots, aprons, and other suitable body protection appropriate to the existing work environment. VENTILATION: Install and operate general and local exhaust ventilation systems of sufficient power to maintain airborne concentrations of TCE below the OSHA PEL standards cited in section 2. SAFETY STATIONS: Make eyewash stations, washing facilities, and safety showers available in areas of use and handling. Contact lenses pose a special hazard; soft lenses may absorb irritants, and all lenses concentrate them. OTHER SPECIAL MODIFICATIONS IN THE WORKPLACE: Because of the unresolved controversy about the carcinogenic status of TCE, all existing personal protective equipment and engineering technology should be used to prevent any possibility of worker contact with this material.

COMMENTS: Practice good personal hygiene. Keep material off of your clothes and equipment. Avoid transfer of material from hands to mouth while eating, drinking, or smoking. Adhere to the sanitation requirements of 29 CFR 1910.141 and 29 CFR 1910.142.

SECTION 9. SPECIAL PRECAUTIONS AND COMMENTS

STORAGE SEGREGATION: Prevent TCE from coming into contact with strong caustics such as NaOH; KOH; chemically active metal like Ba, Li, Na, Mg, Ti; and powdered aluminum or magnesium in acidic solutions. SPECIAL HANDLING/STORAGE: Store this material in a cool, dry, well-ventilated area. Avoid elevated temperatures because products of toxic and corrosive decomposition from TCE may form. Monitor the level of any stabilizer component that may be added to the TCE. (Consult the technical data from the supplier to determine the specifics of any added stabilizer.) If applicable, follow the supplier's recommendation concerning proper rotation of stock, shelf-life requirements, and levels of stabilizers.

ENGINEERING CONTROLS IN THE WORKPLACE: Avoid collecting aluminum fines (very small particles) or chips in a TCE vapor degreaser. Monitor TCE stabilizer levels regularly. Only trained personnel should operate vapor degreasers.

TRANSPORTATION DATA (per 49 CFR 172.101-2):

DOT Hazard Class: ORM-A | DOT ID No. UN1710 | IMO Class: 6.1

IMO Label: St. Andrew's Cross (X)* | DOT Shipping Name: Trichloroethylene | DOT Label: None

* Harmful - Stow away from foodstuffs (IMO Label, Materials of Class 6.1 Packaging Group III).

References: 1-9, 12, 14, 21, 73, 87-94, PI

Judgements as to the suitability of information herein for purchaser's purposes are necessarily purchaser's responsibility. Therefore, although reasonable care has been taken in the preparation of such information, Genium Publishing Corp. extends no warranties, makes no representations and assumes no responsibility as to the accuracy or suitability of such information for application to purchaser's intended purposes or for consequences of its use.

Approvals JO Ricciocco

Indust. Hygiene/Safety 11-18-87

Medical Review

Copyright © 1987 Genium Publishing Corporation.
Any commercial use or reproduction without the publisher's permission is prohibited.

Copyright © August 1, 1987

When heated to decomposition it emits very toxic fumes of PO_x and Cl^-. See also other coumarin entries.

DFH800 CAS:25323-30-2 ***HR: 3***
DICHLOROETHYLENE
DOT: UN 1150
mf: $C_2H_2Cl_2$ mw: 96.94

TOXICITY DATA with REFERENCE
ihl-mus LCLo:76 g/m³/2H AEXPBL 83,235,18
ihl-gpg LCLo:155 g/m³/1H AEXPBL 83,235,18
orl-mam LDLo:2500 mg/kg UGLAAD 121,375,59

DOT Classification: Flammable Liquid; Label: Flammable Liquid.

SAFETY PROFILE: Moderately toxic by ingestion. Mildly toxic by inhalation. Flammable when exposed to heat or flame. When heated to decomposition it emits toxic fumes of Cl^-. See also 1,1-DICHLOROETHYLENE.

DFI100 CAS:540-59-0 ***HR: 3***
1,2-DICHLOROETHYLENE
mf: $C_2H_2Cl_2$ mw: 96.94

SYNS: ACETYLENE DICHLORIDE ◇ DIOFORM ◇ 1,2-DICHLORAETHEN (GERMAN) ◇ DICHLORO-1,2-ETHYLENE (FRENCH) ◇ sym-DICHLOROETHYLENE ◇ NCI-C56031

TOXICITY DATA with REFERENCE
ipr-mus LD50:2 g/kg EJTXAZ 7,247,74
ihl-frg LCLo:117 mg/m³/1H AISFAR 15,1,37
orl-rat LD50:770 mg/kg ARSIM* 20,10,66

CONSENSUS REPORTS: Reported in EPA TSCA Inventory. Community Right-To-Know List.

OSHA PEL: TWA 200 ppm
ACGIH TLV: TWA 200 ppm
DFG MAK: 200 ppm (790 mg/m³)

SAFETY PROFILE: Poison by inhalation. Moderately toxic by ingestion and other routes. When heated to decomposition it emits highly toxic fumes of Cl^-. See also ACETYLENE COMPOUNDS; and CHLORINATED HYDROCARBONS, ALIPHATIC.

DFI200 CAS:156-59-2 ***HR: 1***
cis-DICHLOROETHYLENE
mf: $C_2H_2Cl_2$ mw: 96.94

HCCl=CHCl

PROP: Colorless liquid, pleasant odor. Mp: −80.5°, bp: 59°, lel: 9.7%, uel: 12.8%, flash p: 39°F, d: 1.2743 @ 25°/4°, vap press: 400 mm @ 41.0°, vap d: 3.34.

SYN: 1,2-DICHLOROETHYLENE

TOXICITY DATA with REFERENCE
mmo-smc 100 mmol/L TCMUD8 4,365,84
mma-smc 40 mmol/L TCMUD8 4,365,84
mrc-smc 100 mmol/L TCMUD8 4,365,84
dns-rat:lvr 4300 μmol/L CRNGDP 5,1629,84
ihl-mus LCLo:65000 mg/m³/2H AHBAAM 116,131,36
ihl-cat LCLo:20000 mg/m³/6H AHBAAM 116,131,36

CONSENSUS REPORTS: Reported in EPA TSCA Inventory.

DFG MAK: 200 ppm (790 mg/m³)

SAFETY PROFILE: Mildly toxic by ingestion and inhalation. In high concentration it is irritating and narcotic. Has produced liver and kidney injury in experimental animals. Mutation data reported. Sometimes thought to be nonflammable, however, it is a dangerous fire hazard when exposed to heat or flame. Reaction with solid caustic alkalies or their concentrated solutions produces chloracetylene gas which ignites spontaneously in air. Reacts violently with N_2O_4, KOH, Na, NaOH. Moderate explosion hazard in the form of vapor when exposed to flame. Can react vigorously with oxidizing materials. To fight fire, use water spray, foam, CO_2, dry chemical. When heated to decomposition it emits toxic fumes of Cl^-. See also 1,1-DICHLOROETHYLENE and CHLORINATED HYDROCARBONS, ALIPHATIC.

DFI800 CAS:3967-55-3 ***HR: 3***
1,2-DICHLOROETHYLENE CARBONATE
mf: $C_3H_2Cl_2O_3$ mw: 156.95

SYN: 4,5-DICHLORO-2-OXO-1,3-DIOXOLANE

TOXICITY DATA with REFERENCE
scu-mus TDLo:648 mg/kg/54W-I:ETA JNCIAM 48,1431,72

SAFETY PROFILE: Questionable carcinogen with experimental tumorigenic data. When heated to decomposition it emits toxic fumes of Cl^-.

DFJ000 CAS:14096-51-6 ***HR: 3***
DICHLORO(ETHYLENEDIAMMINE)PLATINUM(II)
mf: $C_2H_8Cl_2N_2Pt$ mw: 326.11

SYNS: ETHYLENEDIAMINEDICHLORIDE PLATINUM (II) ◇ PLATINUM ETHYLENEDIAMMINE DICHLORIDE

TOXICITY DATA with REFERENCE
mmo-sat 2 μg/plate MUREAV 77,45,80
dni-hmn:oth 25 μmol/L IJCNAW 6,207,70
ipr-mus LDLo:14 mg/kg BCPCA6 2,187,73

SAFETY PROFILE: Poison by intraperitoneal route. Human mutation data reported. See also PLATINUM COMPOUNDS. When heated to decomposition it emits very toxic fumes of Cl^- and NO_x.

DFJ050
DICHLO
DOT: UN
mf: C_4H_8

PROP: C
flash p:
temp: 69

SYNS: BI
ETHER ◇ C
◇ CHLORC
ORETHYLE
(GERMAN)
YL ETHER
◇ β,β'-DICI
◇ 2,2'-DICH
◇ 2,2'-DICL
LOWY ETE
◇ 1,1'-OXY
(FRENCH)

TOXICI
skn-rbt 1
skn-rbt 5
eye-rbt 2
mmo-sat
mma-sat
orl-mus
scu-mus
48,1431,
orl-rat L
ihl-rat L
orl-mus
ihl-mus
skn-rbt 1
skn-gpg

CONSE
Group 3
IMEMD
On Cor
tremely

OSHA
ppm; ST
ACGIH
DFG M
DOT C

SAFET
tact, an
irritant.
cinogen
ported.
result in
at 35 pp
when ex
plosion
sulfonic

OxyChem®

Responsible Care:® A Public Commitment

MATERIAL SAFETY DATA SHEET

MSDS NUMBER : M32415

MSDS DATE : 11-23-93

PRODUCT NAME : CAUSTIC SODA LIQUID (ALL GRADES)
(For specific products - see Section XI)

24 HOUR EMERGENCY PHONE: 1-800-733-3665 OR 716-278-7021

I. PRODUCT IDENTIFICATION

HMIS HAZARD RATINGS

HEALTH HAZARD 3 FIRE HAZARD 0 REACTIVITY 2

Based on the National Paint & Coatings Association HMIS rating system.

SARA/TITLE III HAZARD CATEGORIES (See Section X)

Immediate (ACUTE) Health: YES
Delayed (Chronic) Health: NO
Fire Hazard: NO
Reactive Hazard: YES
Sudden Release of Pressure: NO

MANUFACTURER'S NAME AND ADDRESS : Occidental Chemical Corporation, Customer Service, Occidental Tower, P O Box 809050, Dallas, Texas 75380
Telephone (1-800-752-5151)

CHEMICAL NAME: Sodium Hydroxide CAS NUMBER: 1310-73-2

SYNONYMS/COMMON NAMES: Sodium Hydroxide; NaOH

CHEMICAL FORMULA: NaOH

DOT PROPER SHIPPING NAME: Sodium Hydroxide, Solution

DOT HAZARD CLASS: 8

DOT IDENTIFICATION NUMBER: UN1824

DOT PACKING GROUP: II

DOT HAZAROUS SUBSTANCE: RQ 1000 lbs. (Sodium Hydroxide)

DOT MARINE POLLUTANT: NA

ADDITIONAL DESCRIPTION REQUIREMENT: NA

CAS = Chemical Abstract Service Number
PEL = OSHA Permissible Exposure Limit
TLV = ACGIH Threshold Limit Value, Current
ND = No relevant information found or not available
CORP = Corporate Exposure Limit
* = See Chronic Effects Information
NA = Not applicable

IMPORTANT: The information presented herein, while not guaranteed, was prepared by competent technical personnel and is true and accurate to the best of our knowledge. NO WARRANTY, OR GUARANTY, EXPRESS OR IMPLIED IS MADE REGARDING PERFORMANCE, STABILITY, OR OTHERWISE. This information is not intended to be all-inclusive as to the manner and conditions of use, handling and storage. Other factors may involve other or additional safety or performance considerations. While our technical personnel will be happy to respond to questions regarding safe handling and use procedures, safe handling and use remains the responsibility of the customer. No suggestions for use are intended as, and nothing herein shall be construed as a recommendation to infringe any existing patents or violate any Federal, State or local laws.

II. HEALTH HAZARD INFORMATION

EMERGENCY AND FIRST AID PROCEDURES

EYES:

OBJECT IS TO FLUSH MATERIAL OUT IMMEDIATELY THEN GET MEDICAL ATTENTION. IMMEDIATELY flush eyes with large amounts of water for at least 15 minutes, holding lids apart to ensure flushing of entire surface. Washing eyes within several seconds is essential to achieve maximum effectiveness. GET MEDICAL ATTENTION IMMEDIATELY.

SKIN:

IMMEDIATELY wash with plenty of water for at least 15 minutes. Remove contaminated clothing and footwear. Wash clothing before reuse and discard footwear which cannot be decontaminated. GET MEDICAL ATTENTION IMMEDIATELY.

INHALATION:

Remove to fresh air. If breathing is difficult have trained person administer oxygen. If respiration stops, give mouth-to-mouth resuscitation. GET MEDICAL ATTENTION.

INGESTION:

NEVER GIVE ANYTHING BY MOUTH TO AN UNCONSCIOUS PERSON. If swallowed, DO NOT INDUCE VOMITING. Give large quantities of water. If available, give several glasses of milk. If vomiting occurs spontaneously, keep airway clear. GET MEDICAL ATTENTION IMMEDIATELY.

ROUTES OF EXPOSURE

INHALATION:

Breathing dust, mist or spray may cause damage to the upper respiratory tract and lung tissue proper which could produce chemical pneumonia, depending upon severity of exposure.

SKIN:

Contact produces severe burns and destroys tissues. Irritation may be delayed.

EYE CONTACT:

Causes severe burns that result in damage to the eyes and possibly blindness.

INGESTION:

Causes severe burns to mucous membranes of the mouth, throat, esophagus, and stomach.

EFFECTS OF OVEREXPOSURE

ACUTE:

Corrosive to all body tissues by all routes of exposure. The effect of local dermal exposure may consist of multiple areas of superficial destruction of the skin or of primary irritant dermatitis. Similarly, inhalation of dust, spray, or mist may result in varying degrees of irritation or damage to the respiratory tract tissues and an increased susceptibility to respiratory illness.

CHRONIC:

No known chronic effects.

II. HEALTH HAZARD INFORMATION (Continued)

TOXICOLOGY DATA:

Caustic soda is a corrosive material.

Sodium Hydroxide:

Acute dermal LD50	(rabbit)	1350 mg/kg

Human Dermal Exposure

Regardless of concentrations, the severity of damage and extent of its irreversibility increases with length of contact time. Prolonged contact with sodium hydroxide solutions of =>1% can cause a high degree of tissue destruction. The latent period, following skin contact during which no sensation of irritation occurs, varies from several hours for 0.4 - 4% solution to 3 minutes with concentrations of 25% or greater.

III. IMPORTANT COMPONENTS

CAS NUMBER / NAME
7732185 Water

EXPOSURE LIMITS
PEL:Not Established
TLV:Not Established

PERCENTAGE
VOL ND
WT 48.50-91

COMMON NAMES:

Listed On(List Legend Below):
19 23

1310732 Sodium hydroxide (Na(OH))

EXPOSURE LIMITS
PEL:2 mg/m3, Ceiling
TLV:2 mg/m3, Ceiling

PERCENTAGE
VOL ND
WT 9-51.50

COMMON NAMES:
CAUSTIC SODA

Listed On(List Legend Below):
13 18 21

7647145 Sodium chloride (NaCl)

EXPOSURE LIMITS
PEL:None established
TLV:None established

PERCENTAGE
VOL ND
WT 0-1.30

COMMON NAMES:
SALT

Listed On(List Legend Below):
23

7775099 Chloric acid, sodium salt

EXPOSURE LIMITS
PEL:Not Established
TLV:Not Established

PERCENTAGE
VOL ND
WT 0-0.30

COMMON NAMES:
SODIUM CHLORATE

Listed On(List Legend Below):
12 21

All components of this product that are required to be on the TSCA Inventory are listed on the inventory.

Not listed as carcinogen - IARC, NTP, OSHA

LIST LEGEND

12 PA HAZARDOUS SUBSTANCE	13 PA ENVIROMENTAL HAZ SUBSTANCE
18 NY HAZARDOUS SUBSTANCES	19 PA REQUIREMENT- 3% OR GREATER
21 NJ SPECIAL HEALTH HAZ SUB	23 NJ REQUIREMENT- 1% OR GREATER

IV. FIRE AND EXPLOSION DATA

FLASH POINT: NA AUTOIGNITION TEMPERATURE: Nonflammable

FLAMMABLE LIMITS IN AIR, % BY VOLUME- UPPER: NA
LOWER: NA

EXTINGUISHING MEDIA:

This product is not combustible. Foam, carbon dioxide or dry chemical may be used where this product is stored.

SPECIAL FIRE FIGHTING PROCEDURES:

Wear full protective clothing. Avoid direct contact of this product with water as this can cause a violent exothermic reaction.

UNUSUAL FIRE AND EXPLOSION HAZARD:

Direct contact with water can cause a violent exothermic reaction. See Reactivity Section.

V. SPECIAL PROTECTION

VENTILATION REQUIREMENTS:

Special ventilation is not required under normal use. Use local exhaust ventilation where dust, mist, or spray may be generated.

NOTE: Where carbon monoxide or other reaction products may be generated, special ventilation may be required.

SPECIFIC PERSONAL PROTECTIVE EQUIPMENT

RESPIRATORY:

Respiratory protection is not required under normal use. Use NIOSH/MSHA approved respirators where dust, mist, or spray may be generated.

EYE:

Wear chemical safety goggles plus full face shield to protect against splashing (ANSI Z87.1).

GLOVES:

Wear chemical resistant gloves such as natural or butyl rubber. Gloves may be decontaminated by washing with mild soap and water.

OTHER CLOTHING AND EQUIPMENT:

Impervious protective clothing and chemically resistant safety shoes should be worn to minimize contact. Wash contaminated clothing with soap and water and dry before reuse. Emergency shower and eyewash facility should be in close proximity. (ANSI Z358.1).

VI. PHYSICAL DATA

PHYSICAL STATE: LIQUID	Concentration, Weight % 10	20	30	40	50
BOILING POINT,@ 760 mm Hg, °C:	110	113	119	129	144
FREEZING POINT, °C:	-10	-32	0	15	12
VAPOR PRESSURE, mm Hg @ 60°C:	135	110	76	46	13
SPECIFIC GRAVITY @15.6°C/15.6°C:	1.11	1.22	1.33	1.43	1.53
DENSITY, lbs/gallon @ 15.6°C/15.6°C:	9.27	10.20	11.11	11.97	12.76
SOLUBILITY IN H2O, % by Wt.	.....completely soluble.....				
VAPOR DENSITY (Air = 1):	Not Applicable				
APPEARANCE AND ODOR:	Clear liquid with no distinct odor				
ODOR THRESHOLD (PPM):	Not Available				
EVAPORATION RATE:	Not Known				
COEFFICIENT WATER/OIL DISTRIBUTION:	Not Available				
pH:	7.5% solution has pH 14.0				

VII. REACTIVITY DATA

CONDITIONS CONTRIBUTING TO INSTABILITY:
Under normal conditions, this product is stable.

INCOMPATIBILITY:
See Handling and Storage Section. Avoid contact with water. This product may be added slowly to water or acids with dilution and agitation to avoid a violent exothermic reaction. When handling this product, avoid contact with aluminum, tin, zinc, and alloys containing these metals. Do not mix with strong acids without dilution and agitation to prevent violent or explosive reaction. Avoid contact with leather, wool, acids, organic halogen compounds and organic nitro compounds.

HAZARDOUS DECOMPOSITION PRODUCTS:
None known.

CONDITIONS CONTRIBUTING TO HAZARDOUS POLYMERIZATION:
Material is not known to polymerize.

VIII. HANDLING AND STORAGE

HANDLING AND STORAGE PRECAUTIONS:

Do not get into eyes, on skin, on clothing.
Avoid breathing dust, mists, or spray.
Do not take internally.
Use with adequate ventilation and wear respiratory protection when exposure to dust, mist or spray is possible.
When handling, wear chemical splash goggles, face shield, rubber gloves and protective clothing.
Wash thoroughly after handling or contact - exposure can cause burns which are not immediately painful or visible.
Keep container closed.
Product can react violently with water, acids, and other substances - read Special Mixing and Handling Instructions below carefully before using.
Product is corrosive to tin, aluminum, zinc and alloys containing these metals, and will react violently with these metals in powder form.
Hazardous carbon monoxide gas can form upon contact with food and beverage products in enclosed spaces and can cause death. Follow appropriate tank entry procedures (ANSI Z117.1).

SPECIAL MIXING AND HANDLING INSTRUCTIONS

Product can react violently with water. Considerable heat is generated when product is mixed with water. Therefore, when making solutions always carefully follow these steps:

ALWAYS wear ALL protective clothing described above. NEVER add water to product. ALWAYS add product - with constant stirring - slowly to surface of lukewarm (80-100°F) water, to assure product is being completely dissolved as it is added.

If product is added too rapidly, or without stirring, and becomes concentrated at bottom of mixing vessel, excessive heat may be generated, resulting in DANGEROUS boiling and spattering, and a possible IMMEDIATE AND VIOLENT ERUPTION of highly caustic solution.

NOTE: Never add more product than can be absorbed by solution while maintaining temperature below 200°F (@ sea level) to prevent boiling and spattering.

Product can react EXPLOSIVELY with acids, aldehydes, and many other organic chemicals - when mixing product with solutions containing such chemicals, follow all of above mixing instructions, and add product very gradually, while stirring constantly.

ALWAYS empty and clean containers of all residues before adding product, to avoid possible EXPLOSIVE reaction between product and unknown residue.

Returnable containers should be shipped in accordance with supplier's recommendations. Return shipments should comply with all federal, state, and DOT regulations. All residual caustic soda should be removed from containers prior to disposal.

IX. ENVIRONMENTAL PROCEDURES

STEPS TO BE TAKEN IF MATERIAL IS RELEASED OR SPILLED:

Leaks should be stopped. Spills should be contained and cleaned up immediately. Spills should be removed by using a vacuum truck. Neutralize remaining traces of material with any dilute inorganic acid such as hydrochloric, sulfuric, nitric, phosphoric, and acetic acid. The spill area should then be flushed with water followed by liberal covering of sodium bicarbonate. All clean-up material should be removed and placed in approved containers, labeled and stored in a safe place to await proper treatment or disposal. Spills on areas other than pavement, e.g., dirt or sand, may be handled by removing the affected soils and placing in approved containers. Persons performing clean-up work should wear adequate personal protective equipment and clothing. Spills or releases should be reported, if required, to the appropriate local, state and federal regulatory agencies.

CAUTION: Caustic soda may react violently with acids and water.

WASTE DISPOSAL METHOD:

The materials resulting from clean-up operations may be hazardous wastes and, therefore, subject to specific regulations. Package, store, transport, and dispose of all clean-up materials and any contaminated equipment in accordance with all applicable federal, state, and local health and environmental regulations. Shipments of waste materials may be subject to manifesting requirements per applicable regulations. Appropriate disposal will depend on the nature of each waste material and should be performed by competent and properly permitted contractors. Ensure that all responsible federal, state, and local agencies receive proper notification of spill and disposal methods.

X. ADDITIONAL INFORMATION

OSHA Standard 29CFR 1910.1200 requires that information be provided to employees regarding the hazards of chemicals by means of a hazard communication program including labeling, material safety data sheets, training and access to written records. We request that you, and it is your legal duty to, make all information in this Material Safety Data Sheet available to your employees.

To aid our customers in complying with regulatory requirements, SARA Title III hazard categories for this product are indicated in Section I. If the word "YES" appears next to any category, this product may be reportable by you under the requirements of 40 CFR Part 370. Please consult those regulations for details.

XI. PREPARATION INFORMATION

For additional Non-Emergency health, safety, or environmental information telephone (716) 286-3081, or write to:

Occidental Chemical Corporation
Product Stewardship Department
360 Rainbow Boulevard South
Niagara Falls, NY 14302

For Emergencies: 24 HOUR EMERGENCY PHONE: 1-800-733-3665

To request an MSDS: 716-286-3400

This Material Safety Data Sheet (MSDS) covers the following material

- DIAPHRAGM 50%
- RAYON 18%
- DIAPHRAGM 73%
- PURIFIED 50%
- DIAPHRAGM 9%
- DIAPHRAGM 21%
- DIAPHRAGM 30%
- DIAPHRAGM 10%
- RAYON 15%
- RAYON 10%
- RAYON 30%
- DIAPHRAGM 20%
- DIAPHRAGM 45%
- MEMBRANE 30%
- DIAPHRAGM 24%
- 601W
- RAYON 25%
- SOLUTION 50%
- MEMBRANE 50%
- RAYON 50%
- DIAPHRAGM 19%
- DIAPHRAGM 25%
- DIAPHRAGM 18%
- DIAPHRAGM 15%
- RAYON 17%
- RAYON 14%
- RAYON 20%
- DIAPHRAGM 35%
- DIAPHRAGM 28%
- LIQUID
- 601

WARNING LABEL INFORMATION

SIGNAL WORD: DANGER

STATEMENT OF HAZARDS:

CAUSES SEVERE BURNS TO SKIN, EYES AND MUCOUS MEMBRANES.
CONTACT WITH EYES CAN CAUSE PERMANENT EYE DAMAGE.
INHALATION OF DUST, MIST, OR SPRAY CAN CAUSE SEVERE LUNG DAMAGE.
CAN REACT VIOLENTLY WITH WATER, ACIDS, AND OTHER SUBSTANCES.

PRECAUTIONARY STATEMENTS:

Do not get into eyes, on skin, on clothing.
Avoid breathing dust, mist, or spray.
Do not take internally.
Use with adequate ventilation and wear respiratory protection when exposure to dust, mist, or spray is possible.
When handling, wear chemical splash goggles, face shield, rubber gloves and protective clothing.
Wash thoroughly after handling or contact - exposure can cause burns which are not immediately painful or visible.
Keep container closed.
Product can react violently with water, acids, and other substances - read Handling and Storage instructions carefully before using.
Product is corrosive to tin, aluminum, zinc, and alloys containing these metals, and will react violently with these metals in powder form.
Hazardous carbon monoxide gas can form upon contact with food and beverage products in enclosed spaces and can cause death. Follow appropriate tank entry procedures.

FIRST AID:

FOR EYES:

OBJECT IS TO FLUSH MATERIAL OUT IMMEDIATELY THEN GET MEDICAL ATTENTION. IMMEDIATELY flush eyes with large amounts of water for at least 15 minutes, holding lids apart to ensure flushing of entire surface. Washing eyes within several seconds is essential to achieve maximum effectiveness. GET MEDICAL ATTENTION IMMEDIATELY.

FOR SKIN:

IMMEDIATELY wash with plenty of water for at least 15 minutes. Remove contaminated clothing and footwear. Wash clothing before reuse and discard footwear which cannot be decontaminated. GET MEDICAL ATTENTION IMMEDIATELY.

IF INHALED:

Remove to fresh air. If breathing is difficult, have trained person administer oxygen. If respiration stops, give mouth-to-mouth resuscitation. GET MEDICAL ATTENTION.

IF SWALLOWED:

NEVER GIVE ANYTHING NY MOUTH TO AN UNCONSCIOUS PERSON. If swallowed, DO NOT INDUCE VOMITING . Give large quantities of water. If available, give several glasses of milk. If vomiting occurs spontaneously, keep airway clear. GET MEDICAL ATTENTION IMMEDIATELY.

IN CASE OF:
SPILL OR LEAK:

Leaks should be stopped. Spills, after containment, should be shoveled up or removed by vacuum truck (if liquid) to chemical waste area. Neutralize residue with dilute acid, flush spill area with water followed by liberal covering of sodium bicarbonate. Dispose of wash water and spill by-products according to federal, state, and local regulations.

WARNING LABEL INFORMATION (Continued)

HANDLING AND STORAGE:

Considerable heat is generated when product is mixed with water. Therefore, when making solutions always carefully follow these steps:

ALWAYS wear ALL prescribed protective clothing. NEVER add water to product. ALWAYS add product - with constant stirring - slowly to surface of lukewarm (80-100°F) water, to assure product is being completely dissolved as it is added.

If product is added too rapidly, or without stirring, and becomes concentrated at bottom of mixing vessel, excessive heat may be generated, resulting in DANGEROUS boiling and spattering, and a possible IMMEDIATE AND VIOLENT ERUPTION of highly caustic solution.

NOTE: Never add more product than can be absorbed by solution while maintaining temperature below 200°F (@ sea level) to prevent boiling and spattering.

Product can react EXPLOSIVELY with acids, aldehydes, and many other organic chemicals - when mixing product with solutions containing such chemicals, follow all of above mixing instructions, and add product very gradually, while stirring constantly.

ALWAYS empty and clean containers of all residues before adding product, to avoid possible EXPLOSIVE reaction between product and unknown residue.

Returnable containers should be shipped in accordance with supplier's recommendations. Return shipments should comply with all federal, state, and DOT regulations. All residual caustic soda should be removed from containers prior to disposal.

DISPOSAL:

The materials resulting from clean-up operations may be hazardous wastes and, therefore, subject to specific regulations. Package, store, transport, and dispose of all clean-up materials and any contaminated equipment in accordance with all applicable federal, state, and local health environmental regulations. Shipments of waste materials may be subject to manifesting requirements per applicable regulations. Appropriate disposal will depend on the nature of each waste material and should be performed by competent and properly permitted contractors. Ensure that all responsible federal, state, and local agencies receive proper notification of disposal.

INFORMATION REQUIRED BY FEDERAL, STATE OR LOCAL REGULATIONS:

This product contains:

CAS#	NAME
7732185	Water
1310732	Sodium hydroxide (Na(OH))
7647145	Sodium chloride (NaCl)
7775099	Chloric acid, sodium salt

HMIS RATING SYSTEM: HEALTH 3 FLAMMABILITY 0 REACTIVITY 2

FOR INDUSTRIAL USE ONLY **LABEL 103M32415**

BDH Inc.

M A T E R I A L S A F E T Y D A T A S H E E T

Section I Chemical Product and Company Identification

Manufacturer:

BDH Inc.
350 Evans Avenue
Toronto, Ontario
Canada, M8Z 1K5

Information Phone No.: 416-255-8521
Hours: Mon. to Fri. (0830 - 1630)
CHEMTREC Transportation Emergency Center
(CHEMTREC) 24-Hour...1-800-424-9300

Product Name: Sulfuric acid 0.02N, 0.1N, 0.2N, 0.7% v/v, 0.04N, 0.025N, 0.02M
Catalogue Number(s): VW3229, VW3230, VW3231, VW3267, VW3652, VW3678, BDH0099
Chemical Name/Other Name: Sulfuric acid 0.02N, 0.1N, 0.2N, 0.7% v/v, 0.04N, 0.25N, 0.02M
Chemical Formula: H_2SO_4, H_2O
Chemical Family: Mineral acid solution

Section II Composition/Information on Ingredients

Chemical Name	CAS No.	OSHA PEL	ACGIH TLV	%
Sulfuric acid	7664-93-9	1 mg/m^3	1 mg/m^3	0.1-1.25
Water	7732-18-5			

Section III Hazards Identification

Appearance: Clear, colorless liquid

********** **EMERGENCY OVERVIEW** **********
* May be harmful if swallowed *
****

Potential Health Effects (Acute & Chronic)

Symptoms of Exposure: May cause eye or skin irritation. May be harmful if swallowed
Medical condition aggravated by exposure: None identified
Routes of Entry: Inhalation, ingestion
Carcinogenicity: This material is not listed (IARC, NTP, OSHA) as a cancer causing agent.

Section IV First Aid Measures

Eye: In case of eye contact, flush with plenty of water for at least 15 minutes while holding the eyelids open. Have eyes examined by medical personnel.

Skin: In case of skin contact, immediately flush skin with plenty of water for at least 15 minutes while removing contaminated clothing and shoes.

Ingestion: If swallowed, do not induce vomiting. Give victim a glass of water or milk. Call a physician immediately. Never give anything by mouth to an unconscious person.

Inhalation: If inhaled, remove to fresh air. If not breathing, trained personnel should begin artificial respiration. Seek medical attention.

Section V Fire Fighting Measures

Flammability Classification: Noncombustible
Extinguishing Media: Use an extinguisher appropriate to the surrounding material that is burning.
Flash point(F)/method: Not applicable
Fire & Explosion Hazard: Thermal decomposition produces toxic fumes.
Upper Flammable Limit (%): Not applicable
Lower Flammable Limit (%): Not applicable
Autoignition Temperature: Not applicable
Firefighting procedures: Firefighters should wear a self contained breathing apparatus.
Hazardous Combustion Products: SO_x
Sensitivity to static discharge: No
Sensitivity to mechanical impact: No

Section VI Accidental Release Measures

Leak or Spill Cleanup: Evacuate the area of all unnecessary personnel. Wear suitable protective equipment listed in exposure controls/personal protection. Contain the release and eliminate it's source, if this can be done without risk. Take up and containerize for proper disposal as described under Disposal. Comply with Federal, State, and local regulations on reporting releases. Refer to Regulatory Information for reportable quantity and other regulatory data.

Section VII Handling & Storage

Handling & Storage: Do not store near metal powders or other reducing materials. Keep container closed.

Section VIII Exposure Controls/Personal Protection

Engineering Controls: Engineering and/or administrative controls should be implemented to reduce exposure.

Personal Protective Equipment

Gloves: Neoprene or equivalent
Respiratory Protection: Fume hood as appropriate
Eye protection: Safety glasses with side shields
Clothing: Impervious protective clothing should be worn to prevent skin contact

Section IX Physical & Chemical Properties

Physical State: Liquid
Appearance: Clear, colorless liquid
Odor: Odorless
Odor threshold: Not applicable
Vapor pressure: Not available
Vapor density: Not available
Specific gravity: Not available
Boiling point (F): Not available
Melting point (F): Not available
Evaporation rate: Not available
pH: Not available
Solubility in water: Soluble
Octanol/water partition coefficient: Not available
Per cent volatile by vol (%): 100
Molecular weight: 98.08 (Sulfuric acid)

Section X Stability & Reactivity

Chemical Stability: Normally stable
Conditions to Avoid: Can react with powdered metals to form flammable hydrogen gas.
Materials to Avoid: Bases, metal powders, cyanides, reducing materials
Hazardous Polymerization: Does not occur
Hazardous Decomposition products: SO_x

Section XI Toxicological Information

Effects of Acute Exposure: May cause skin or eye irritation upon contact. May be harmful if swallowed.
Effects of Chronic Exposure: No information available
LD50: 2140 mg/kg (oral-rat) (Sulfuric acid)
LC50: Not available
Irritancy (Draize Test Results): Eye, rabbit 1380 mg - severe
Carcinogenicity: This material is not listed (IARC, NTP, OSHA) as a cancer causing agent.
Teratogenicity: No information available
Mutagenicity: No information available
Reproductive Effects: No information available
Sensitization to product: No information available
Target organs: None identified

Section XII Disposal Considerations

EPA Waste Number(s): D002
Treatment: Neutralize to pH 6-9. Contact your local permitted waste disposal site (TSD) for permissible treatment sites.
ALWAYS CONTACT A PERMITTED WASTE DIPOSER (TSD) TO ASSURE COMPLIANCE WITH ALL CURRENT LOCAL, STATE AND FEDERAL REGULATIONS

Section XIII Transport Information

DOT Shipping Name: Not regulated
DOT Number (UN): Not regulated
Packing Group: Not regulated
Hazard Class: Not regulated

Section XIV Regulatory Information

TSCA Inventory (Yes/No): Yes, this material is a mixture. The CAS numbers of all components are listed on the TSCA inventory.

Component	SARA EHS (302)	SARA EHS TPQ (lbs)	CERCLA RQ (lbs)
Sulfuric acid	Y	1000	1000
Water	-	-	-

Component	OSHA Floor List	SARA 313	DeMinimis (SARA 313)(%)
Sulfuric acid	Y	Y	1.0
Water	-	-	-

Section XV Other Information

NFPA Hazard Ratings (0-4)

Health: 1 **Flammability:** 0 **Reactivity:** 0

NFPA Special Warnings: None
Preparation Date: December 18, 1992
Revision History: August 30, 1993; Feb 3, 1994
Comments: None
Prepared by: Technical Affairs Department, BDH Inc.,
Toronto, Ontario, Canada
(416) 255-8521

The statements contained herein are offered for informational purposes only and are based upon technical data that BDH INC believes to be accurate. It is intended for use only by persons having the necessary technical skills and at their own discretion and risk. Since conditions and manner of use are outside our control, we make NO WARRANTY,EXPRESS OR IMPLIED,OF MERCHANTABILITY,FITNESS OR OTHERWISE.

Copyright BDH, 1995

PERFORMANCE SERIES
The harder working chemistry

MAGNIFLOC® 1883A

FLOCCULANT

Type: Emulsion, anionic

MAGNIFLOC 1883A is a high molecular weight, highly charged anionic flocculant which works effectively as a coagulant aid or sludge conditioning agent in liquid-solids separation processes.

TYPICAL PROPERTIES

Appearance	Opaque liquid
Specific gravity	
@ 25°C (77°F)	1.01±0.2
Typical bulk viscosity,*	
as is, at 25°C (77°F)	500-1500 cps
Typical viscosity,*cps	

% solution	20°C
0.5	380
1.0	720
2.0	2500

Freezing point	0°F (-18°C)
Flash point, closed cup	>200°F (93°C)
Shelf life	6 months

*Brookfield

Environmental Properties*

BOD_5	~100 mg/L
COD	~5000 mg/L

*1% solution

ADVANTAGES

Performance

- Works over a wide pH range and does not alter the system pH.
- Larger, faster-settling flocs are formed in gravity settling operations.
- Increased filtration rates and drier cakes are produced in filtration processes. Sludges contain less ash when incinerated.
- Higher solids capture, increased clarity and greater throughput are attained in centrifugation.
- Air flotation operations producer clearer underflows and greater throughput.

Economical

- Effective at low dosage levels.
- High activity improves cost performance.

Convenient

- Helps to maintain clean, safe dissolving tank stations.
- Liquid is easy to feed accurately directly from the drum or by simple manual addition.
- Dissolves rapidly, leaving no insolubles ("fish eyes").
- Single component liquid.

PRINCIPAL USES

MAGNIFLOC 1883A flocculant is recommended for liquids-solids separation systems:

- Mechanical dewatering–treating alum muds and inorganic sludges for increased throughput, solids recovery and effluent quality.
- Gravity settling–improves floc formation for faster settling rates, increased sludge compaction and improved water quality.
- Coagulant aid–settling aid with inorganic and organic coagulants as in heavy metal precipitation and phosphorous removal.
- Water clarification–improves water effluent quality by reducing suspended solids and turbidity.

CYTEC

CYTEC INDUSTRIES INC.
Water Treating Chemicals
Paper Chemicals
West Paterson, NJ 07424
201-357-3100

Treatment Levels

• Flocculant	0.5-5.0 mg/L
• Coagulant aid	0.10-2.5 mg/L
• Filtration aid	0.03-0.3 mg/L
• Sludge conditioning agent	25-250 mg/L
• Friction reducer in turbulent flow applications	50-500 mg/L

Application

A stock solution of MAGNIFLOC 1883A flocculant should be diluted 100:1 with clean water prior to being fed to the system and then metered to the system by use of a corrosion-resistant, positive-displacement pump. Best results are obtained by dispersing the feed stream and promoting high turbulence for rapid mixing beyond the addition point.

Preparation of Stock Solution*

As a precautionary step, agitate MAGNIFLOC 1883A flocculant thoroughly in the drum with either a drum stirrer or a continuous recirculating pump to insure uniformity.

In order to have a continuous supply of flocculant solution, both a make-up tank and a holding or feed tank are recommended. The size of these tanks will depend upon the amount of polymer to be used, the desired feed concentration and the number of preparations per day that are convenient. Solutions of up to 3% concentration may be prepared using make-up water below 120°F (50°C).

Fill the solution preparation tank half full of water. While agitating, add the predetermined gallons of flocculant either through a disperser unit or directly into the vortex of the stirred solution in the tank and continue to fill the tank to achieve the desired concentration of polymer. Mix for an additional 10-30 minutes to insure complete dissolution. The flocculant solution is now fully active, ready for use and should be pumped to the holding/feed tank.

If mechanical mixers are used for agitation during solution make-up, do not use high speed units (above 475 rpm) or any other method having a high shearing action. This can cause degradation of the high molecular weight flocculant.

Health and Safety

MAGNIFLOC 1883A flocculant is not acutely toxic, either by ingestion or skin contact. Only minimal eye irritation and moderate skin irritation were produced in standard tests, using rabbits. When, however, the skin irritation test was modified to simulate spilling of the liquid into one's boots, severe irritation resulted.

Before handling this material, read the corresponding Cytec Industries Inc. Material Safety Data Sheet for safety, health and environmental data.

Handling and Storage

MAGNIFLOC 1883A flocculant should be stored at temperatures between 40°-90°F (5°-30°C). If MAGNIFLOC 1883A freezes, thaw completely and mix thoroughly prior to use.

Storage in glass, stainless steel, plastic or epoxy-lined vessels is recommended. Do not use aluminum, copper, iron in feed or storage systems.

Spilled product is very slippery and should be scooped and/or wiped up prior to flushing with water.

Shipping

MAGNIFLOC 1883A flocculant is shipped as a one component system in 55 gallon (200 liter), nonreturnable, lined steel drums or 275 gallon bulk drums, FOB Mobile, AL. It is shipped under a *protect from freezing* classification. For information on bulk delivery, contact your Cytec Sales Representative, or nearest Cytec Sales office.

IMPORTANT NOTICE

The information and statements herein are believed to be reliable, but are not to be construed as a warranty or representation for which we assume legal responsibility. Users should undertake sufficient verification and testing to determine the suitability for their own particular purpose of any information or products referred to herein. NO WARRANTY OF FITNESS FOR A PARTICULAR PURPOSE IS MADE. Nothing herein is to be taken as permission, inducement or recommendation to practice any patented invention without a license.

CYTEC

CYTEC INDUSTRIES INC.
Water Treating Chemicals
Paper Chemicals
West Paterson, NJ 07424
201-357-3100

2k 3/94

CYTEC

MATERIAL SAFETY DATA

MSDS No: 4892
Date: 12/17/93
Supersedes: 04/14/93

1. CHEMICAL PRODUCT AND COMPANY IDENTIFICATION

PRODUCT NAME: **MAGNIFLOC® 1883A Flocculant**

SYNONYMS: Anionic polyacrylamide in water-in-oil emulsion

CHEMICAL FAMILY: Anionic polymer

MOLECULAR FORMULA: Polymer

MOLECULAR WGT: Polymer

CYTEC INDUSTRIES INC., FIVE GARRET MOUNTAIN PLAZA, WEST PATERSON, NEW JERSEY 07424, USA - 201/357-3100
EMERGENCY PHONE: For emergency involving spill, leak, fire, exposure or accident call CHEMTREC: 1-800/424-9300. Outside the USA and Canada call 202/483-7616.

2. COMPOSITION/INFORMATION ON INGREDIENTS

OSHA REGULATED COMPONENTS

COMPONENT	CAS. NO.	%	TWA/CEILING	REFERENCE
Petroleum distillate hydrotreated light	064742-47-8	~24	400 ppm	OSHA

3. HAZARDS IDENTIFICATION

EMERGENCY OVERVIEW

APPEARANCE AND ODOR: White, viscous, opaque liquid; slight hydrocarbon odor

STATEMENTS OF HAZARD:
WARNING! CAUSES SKIN IRRITATION
MAY CAUSE EYE IRRITATION

POTENTIAL HEALTH EFFECTS

EFFECTS OF OVEREXPOSURE:
The acute oral (rat) and acute dermal (rabbit) LD50 values are both >10 ml/kg. Minimal eye irritation was produced in rabbit testing. When this product was tested in rabbits for skin irritation under occlusive conditions, as would be produced if the product was spilled into boots, irreversible skin damage was produced. When the product was tested under nonocclusive conditions with 24 hours of skin contact, as would occur when the product was spilled on clothing, some eschar formation was observed but the overall skin irritation score was lower (2.2 moderately irritating)
Refer to Section 11 for toxicology information on the OSHA regulated components of this product.

4. FIRST AID MEASURES

In case of skin contact, remove contaminated clothing without delay. Flush skin thoroughly with water. Do not reuse clothing without laundering.
In case of eye contact, immediately irrigate with plenty of water for 15 minutes.

5. FIRE FIGHTING MEASURES

FLAMMABLE PROPERTIES

FLASH POINT: >200 F; 93 C
METHOD: Closed Cup

FLAMMABLE LIMITS
(% BY VOL): Not available

AUTOIGNITION TEMP: Not available

DECOMPOSITION TEMP: Not available

EXTINGUISHING MEDIA AND FIRE FIGHTING INSTRUCTIONS

Use water spray, carbon dioxide or dry chemical to extinguish fires. Use water to keep containers cool. Wear self-contained, positive pressure breathing apparatus and full fire-fighting protective clothing. See *Section 8 (Exposure Controls/Personal Protection) for special protective clothing.*

6. ACCIDENTAL RELEASE MEASURES

STEPS TO BE TAKEN IN CASE MATERIAL IS RELEASED OR SPILLED

Where exposure level is not known, wear NIOSH approved, positive pressure, self-contained respirator. Where exposure level is known, wear NIOSH approved respirator suitable for level of exposure. In addition to the protective clothing/equipment in Section 8 (Exposure Controls/Personal Protection), wear impervious boots. Spills of this product are very slippery. Spilled material should be absorbed onto an inert material and scooped up. The area should be thoroughly flushed with water and scrubbed to remove residue. If slipperiness remains apply more dry-sweeping compound.

7. HANDLING AND STORAGE

Avoid contact with eyes, skin, and clothing. Wash thoroughly after handling.

Prevent material from coming in contact with common metals. To avoid product degradation and equipment corrosion, do not use iron, copper or aluminum containers or equipment. OSHA regulations (29 CFR 106.a.14), required that the flashpoint of materials of this type be determined by the Pensky-Martens Closed Tester method. The test for this product indicates it has a flashpoint greater than 200 F (93.3 C). Another method indicates a potential for flash at approximately 154 F (67.8 C); therefore, caution should be exercised in storage and handling.

8. EXPOSURE CONTROLS/PERSONAL PROTECTION

ENGINEERING CONTROLS AND PERSONAL PROTECTIVE EQUIPMENT (PPE)

Where this material is not used in a closed system, good enclosure and local exhaust ventilation should be provided to control exposure. Food, beverages, and tobacco products should not be carried, stored, or consumed where this material is in use. Before eating, drinking, or smoking, wash face and hands with soap and water. Avoid skin contact. Protective clothing such as impervious gloves, apron, workpants, long sleeve work shirt, or disposable coveralls are recommended to prevent skin contact. For operations where eye or face contact can occur, wear eye protection such as chemical splash proof goggles or face shield. Eyewash equipment and safety shower should be provided in areas of potential exposure. Where exposures are below the Permissible Exposure Limit (PEL), no respiratory protection is required. Where exposures exceed the PEL, use respirator approved by NIOSH for the material and level of exposure. See "GUIDE TO INDUSTRIAL RESPIRATORY PROTECTION" (NIOSH).

9. PHYSICAL AND CHEMICAL PROPERTIES

APPEARANCE AND ODOR: White, viscous, opaque liquid; slight hydrocarbon odor

BOILING POINT: Aqueous phase ~100 C; Oil phase ~175 C

MELTING POINT: Not applicable

VAPOR PRESSURE: Similar to water

SPECIFIC GRAVITY: ~1.0

VAPOR DENSITY: Not available

% VOLATILE (BY WT): 62-66

pH: 6-8; *(upon dilution in water)*

SATURATION IN AIR (% BY VOL): Not available

EVAPORATION RATE: Not available

SOLUBILITY IN WATER: Limited by viscosity

10. STABILITY AND REACTIVITY

STABILITY: Stable
CONDITIONS TO AVOID: None known

POLYMERIZATION: Will Not Occur
CONDITIONS TO AVOID: None known

INCOMPATIBLE MATERIALS: Strong oxidizing agents. This material reacts slowly with iron, copper and aluminum, resulting in corrosion and product degradation.

HAZARDOUS DECOMPOSITION PRODUCTS: Thermal decomposition or combustion may produce carbon monoxide, carbon dioxide, ammonia and/or oxides of nitrogen.

11. TOXICOLOGICAL INFORMATION

Toxicological information for the product is found under Section 3. HAZARDS IDENTIFICATION. Toxicological information on the OSHA regulated components of this product is as follows:

Acute overexposure to petroleum distillate vapors may cause eye and throat irritation. Certain petroleum distillate fractions may produce moderate to severe skin irriation with direct contact. Prolonged repeated exposure to petroleum distillate vapor may cause central nervous system damage as well as heart and blood disorders. The oral LD50 in the rat for various distillates ranges from 4.5 to greater than 25 ml/kg, and the inhalation LC50 in rats is about 15000 ppm. Aspiration of petroleum distillate may cause chemical Pneumonitis. Overexposure to vapor may cause dizziness, drowsiness, headache, and nausea.

12. ECOLOGICAL INFORMATION

LC50

TROUT 96 HOUR: 120 mg/L

OCTANOL/H_2O PARTITION COEF.: Not available

13. DISPOSAL CONSIDERATIONS

Disposal must be made in accordance with applicable governmental regulations.

14. TRANSPORT INFORMATION

This section provides basic shipping classification information. Refer to appropriate *transportation regulations for specific requirements.*

	D.O.T. SHIPPING INFORMATION	IMO SHIPPING INFORMATION
SHIPPING NAME:	NOT APPLICABLE/NOT REGULATED	NOT APPLICABLE/NOT REGULATED
HAZARD CLASS/ PACKING GROUP:	Not Applicable	Not Applicable
UN NUMBER	Not Applicable	Not Applicable
NDG PAGE:	Not Applicable	Not Applicable

D.O.T. HAZARDOUS SUBSTANCES:	(PRODUCT REPORTABLE QUANTITY) Not Applicable	Not Applicable
TRANSPORT LABEL REQUIRED:	None Required	None Required

	ICAO/IATA	TRANSPORT CANADA
SHIPPING NAME:	NOT APPLICABLE/NOT REGULATED	NOT APPLICABLE/NOT REGULATED
HAZARD CLASS:	Not Applicable	Not Applicable
SUBSIDIARY CLASS:	Not Applicable	Not Applicable
UN / ID NUMBER:	Not Applicable	Not Applicable
PACKING GROUP:	Not Applicable	Not Applicable
TRANSPORT LABEL REQUIRED:	None Required	None Required
PACKING INSTR:	PASSENGER Not Applicable CARGO Not Applicable	Not Applicable
MAX NET QTY:	PASSENGER Not Applicable CARGO Not Applicable	Not Applicable

ADDITIONAL TRANSPORT INFORMATION

TECHNICAL NAME (N.O.S.):	Not Applicable

15. REGULATORY INFORMATION

INVENTORY INFORMATION

US TSCA:	This product is manufactured in compliance with all provisions of the Toxic Substances Control Act, 15 U.S.C. 2601 et. seq.
CANADA DSL:	Components of this product have been reported to Environment Canada in accordance with subsection 25 of the Canadian Environmental Protection Act and are included on the Domestic Substances List.
EEC EINECS:	Product was not required to be included in the European Inventory of Existing Chemical Substances (EINECS) since the product (or its components) was regarded to be a polymer by the EEC-Commission. This product fulfils the requirements of Council Directive 67/548/EEC, amended 79/831/EEC.

OTHER ENVIRONMENTAL INFORMATION

The following components are defined as toxic chemicals subject to reporting requirements of Section 313 of Title III and of 40 CFR 372 or subject to other EPA regulations.

COMPONENT	CAS. NO.	%	TPQ(lbs)	RQ(lbs)	S313	RCRA	TSCA 12B
This product does not contain any components regulated under these sections of the EPA							

PRODUCT CLASSIFICATION UNDER SECTION 311 OF SARA
ACUTE (Y) CHRONIC (N) FIRE (N) REACTIVE (N) PRESSURE (N)

6. OTHER INFORMATION

NFPA HAZARD RATING (National Fire Protection Association)

Fire	FIRE: Materials that must be preheated before ignition can occur.
1	HEALTH: Materials which on intense or continued exposure could cause temporary
Health 2 0 Reactivity	incapacitation or possible residual injury unless prompt medical treatment is given
—	REACTIVITY: Materials which in themselves are normally stable, even under fire
Special	exposure conditions, and which are not reactive with water.

REASON FOR ISSUE:

Revised

Marvin A. Friedman, Ph.D., Director of Toxicology and Product Stewardship

This information is given without any warranty or representation. We do not assume any legal responsibility for same, nor do we give permission, inducement, or recommendation to practice any patented invention without a license. It is offered solely for your consideration, investigation and verification. Before using any product, read its label.

COPYRIGHT 1995 SUPELCO, INC. SUPELCO PARK BELLEFONTE, PA 16823-0048
ALL RIGHTS RESERVED TWX 510-670-3600

CUSTOMER P.O. NO.

DATE 7/27/95 MATERIAL SAFETY DATA SHEET PAGE 1

SECTION I -GENERAL INFORMATION

CATALOG NO 40085 (REORDER PRODUCT BY THIS NO.)
PRODUCT NAME TRICHLOROETHENE, 1X1ML, MEOH, 5000UG/ML
DATA SHEET NO I400850
TRICHLOROETHENE
FORMULA MIXTURE FORMULA WEIGHT
CAS NRTECS
SYNONYM ANALYTICAL STANDARD IN METHANOL
MANUFACTURER SUPELCO INC. PHONE 814-359-3441
ADDRESS SUPELCO PARK, BELLEFONTE, PA 16823-0048

SECTION II - HAZARDOUS INGREDIENTS OF MIXTURES

CHEMICAL NAME
COMMON NAME - PERCENTAGE - CAS #
(FORMULA) - PEL(UNITS) - TLV(UNITS)
LD50 VALUE - CONDITIONS

ETHYLENE, 1,1,2-TRICHLORO-
TRICHLOROETHYLENE 0.5 79-01-6
C2HCL3 50 PPM 50 PPM
2402 MG/KG ORAL MOUSE SEE FOOTNOTE(4,6)
METHANOL
METHANOL 99-100 67-56-1
CH3OH 260 MG/M3 262 MG/M3
5628 MG/KG ORAL RAT SEE FOOTNOTE(6)

FOOTNOTES

4 CLASSIFIED BY IARC AS A CLASS 3 CARCINOGEN.
6 SUBJECT TO THE REPORTING REQUIREMENTS OF SARA TITLE III, SECTION 313.

SECTION III - PHYSICAL DATA

BOILING POINT 65 C MM MELTING POINT -98 C
VAPOR PRESSURE 100 MM C VAPOR DENSITY 1.10 C (AIR=1)
SPECIFIC GRAVITY .790 G/ML C (WATER=1) PERCENT VOLATILE BY VOLUME 100
WATER SOLUBILITY 100 EVAPORATION RATE >1 (ETHER=1)
APPEARANCE CLEAR COLORLESS LIQUID

SECTION IV - FIRE AND EXPLOSION HAZARD DATA

FLASH POINT 50 F FLAMMABLE LIMITS LEL 6.0 UEL 36.5

EXTINGUISHING MEDIA

CO2
DRY CHEMICAL
ALCOHOL FOAM.

SPECIAL FIRE FIGHTING PROCEDURES

WEAR SELF CONTAINED BREATHING APPARATUS WHEN FIGHTING A CHEMICAL FIRE.

UNUSUAL FIRE AND EXPLOSION HAZARDS

THE FOLLOWING TOXIC VAPORS ARE FORMED WHEN THIS MATERIAL IS HEATED TO DECOMPOSITION.

CATALOG NO 40085 (REORDER PRODUCT BY THIS NO.)
PRODUCT NAME TRICHLOROETHENE, 1X1ML, MEOH, 5000UG/ML
DATA SHEET NO I400850
TRICHLOROETHENE
* CONTINUED *
HYDROGEN CHLORIDE

SECTION V - HEALTH HAZARD DATA

LD50 5628 MG/KG ORAL RAT TLV 262 MG/M3
PEL 260 MG/M3

EMERGENCY AND FIRST AID PROCEDURES

EYES
FLUSH EYES WITH WATER FOR 15 MINUTES.
CONTACT A PHYSICIAN.

SKIN
FLUSH SKIN WITH LARGE VOLUMES OF WATER.

INHALATION
IMMEDIATELY MOVE TO FRESH AIR.
IF BREATHING STOPS, GIVE ARTIFICIAL RESPIRATION
CONTACT A PHYSICIAN

INGESTION
NEVER GIVE ANYTHING BY MOUTH TO AN UNCONSCIOUS PERSON
NEVER TRY TO MAKE AN UNCONSCIOUS PERSON VOMIT
GIVE 2 TABLESPOONS OF BAKING SODA IN A GLASS OF WATER
PRESS FINGERS TO BACK OF TONGUE TO INDUCE VOMITING.
IMMEDIATELY CONTACT A PHYSICIAN.

EFFECTS OF OVEREXPOSURE

HARMFUL IF INHALED
MAY BE FATAL IF SWALLOWED
CONTAINS MATERIAL(S) KNOWN TO THE STATE OF CALIFORNIA TO CAUSE CANCER.
HEADACHE
NAUSEA
GASTROINTESTINAL DISTURBANCES
REPORTED MUTAGEN
REPORTED ANIMAL CARCINOGEN.
BLINDNESS

SECTION VI - REACTIVITY DATA

STABILITY STABLE.

CONDITIONS TO AVOID

N/A

CATALOG NO 40085 (REORDER PRODUCT BY THIS NO.)
PRODUCT NAME TRICHLOROETHENE, 1X1ML, MEOH, 5000UG/ML
DATA SHEET NO I400850
TRICHLOROETHENE

SECTION VI - REACTIVITY DATA

* CONTINUED *

INCOMPATIBILITY

OXIDIZING AGENTS
CHROMIC ANHYDRIDE, LEAD PERCHLORATE, PERCHLORIC ACIDS

HAZARDOUS DECOMPOSITION PRODUCTS

HYDROGEN CHLORIDE

HAZARDOUS POLYMERIZATION WILL NOT OCCUR.

CONDITIONS TO AVOID

N/A

SECTION VII - SPILL OR LEAK PROCEDURES

STEPS TO BE TAKEN IN CASE MATERIAL IS RELEASED OR SPILLED

TAKE UP WITH ABSORBENT MATERIAL.
VENTILATE AREA.
ELIMINATE ALL IGNITION SOURCES.

WASTE DISPOSAL METHOD

COMPLY WITH ALL APPLICABLE FEDERAL, STATE, OR LOCAL REGULATIONS

SECTION VIII - SPECIAL PROTECTION INFORMATION

RESPIRATORY PROTECTION (SPECIFIC TYPE)

WEAR FACE MASK WITH ORGANIC VAPOR CANISTER.

PROTECTIVE GLOVES

WEAR RUBBER GLOVES.

EYE PROTECTION

WEAR PROTECTIVE GLASSES.

VENTILATION

USE ONLY IN WELL VENTILATED AREA.

CATALOG NO 40085 (REORDER PRODUCT BY THIS NO.)
PRODUCT NAME TRICHLOROETHENE, 1X1ML, MEOH, 5000UG/ML
DATA SHEET NO I400850
TRICHLOROETHENE

SECTION VIII - SPECIAL PROTECTION INFORMATION

* CONTINUED *

SPECIAL

N/A

OTHER PROTECTIVE EQUIPMENT

N/A

SECTION IX - SPECIAL PRECAUTIONS

STORAGE AND HANDLING

REFRIGERATE IN SEALED CONTAINER.
KEEP AWAY FROM OXIDIZERS.
KEEP AWAY FROM IGNITION SOURCES.

OTHER PRECAUTIONS

AVOID EYE OR SKIN CONTACT.
AVOID BREATHING VAPORS.

WHILE THE INFORMATION AND RECOMMENDATIONS SET FORTH HEREIN ARE BELIEVED TO BE ACCURATE AS OF THE DATE HEREOF, SUPELCO, INC. MAKES NO WARRANTY WITH RESPECT THERETO AND DISCLAIMS ALL LIABILITY FROM RELIANCE THEREON.

LAST REVISED 5/17/94

COPYRIGHT 1995 SUPELCO, INC. SUPELCO PARK BELLEFONTE, PA 16823-0048
ALL RIGHTS RESERVED TWX 510-670-3600

CUSTOMER P.O. NO.

DATE 7/27/95 MATERIAL SAFETY DATA SHEET PAGE 1

SECTION I -GENERAL INFORMATION

CATALOG NO 40173 (REORDER PRODUCT BY THIS NO.)
PRODUCT NAME CIS-1,2-DICHLOROETHENE 1X1ML, MEOH, 5000UG/ML
DATA SHEET NO I401730
CIS-1,2-DICHLOROETHENE
FORMULA MIXTURE FORMULA WEIGHT
CAS NRTECS
SYNONYM ANALYTICAL STANDARD IN METHANOL
MANUFACTURER SUPELCO INC. PHONE 814-359-3441
ADDRESS SUPELCO PARK, BELLEFONTE, PA 16823-0048

SECTION II - HAZARDOUS INGREDIENTS OF MIXTURES

CHEMICAL NAME
COMMON NAME - PERCENTAGE - CAS #
(FORMULA) - PEL(UNITS) - TLV(UNITS)
LD50 VALUE - CONDITIONS

ETHYLENE, CIS-1,2-DICHLORO-
CIS-1,2-DICHLOROETHYLENE 0.5 156-59-2
N/A N/A

METHANOL
METHANOL 99-100 67-56-1
CH3OH 260 MG/M3 262 MG/M3
5628 MG/KG ORAL RAT SEE FOOTNOTE(6)

FOOTNOTES
SUBJECT TO THE REPORTING REQUIREMENTS OF SARA TITLE III, SECTION 313.

SECTION III - PHYSICAL DATA

BOILING POINT 65 C MM MELTING POINT -98 C
VAPOR PRESSURE 100 MM C VAPOR DENSITY 1.10 C (AIR=1)
SPECIFIC GRAVITY .790 G/ML C (WATER=1) PERCENT VOLATILE BY VOLUME 100
WATER SOLUBILITY 100 EVAPORATION RATE >1 (ETHER=1)
APPEARANCE CLEAR COLORLESS LIQUID

SECTION IV - FIRE AND EXPLOSION HAZARD DATA

FLASH POINT 50 F FLAMMABLE LIMITS LEL 6.0 UEL 36.5

EXTINGUISHING MEDIA

CO2
DRY CHEMICAL
ALCOHOL FOAM.

SPECIAL FIRE FIGHTING PROCEDURES

WEAR SELF CONTAINED BREATHING APPARATUS WHEN FIGHTING A CHEMICAL FIRE.

UNUSUAL FIRE AND EXPLOSION HAZARDS

THE FOLLOWING TOXIC VAPORS ARE FORMED WHEN THIS MATERIAL IS HEATED TO DECOMPOSITION.

CATALOG NO 40173 (REORDER PRODUCT BY THIS NO.)
PRODUCT NAME CIS-1,2-DICHLOROETHENE 1X1ML, MEOH, 5000UG/ML
DATA SHEET NO I401730
CIS-1,2-DICHLOROETHENE
* CONTINUED *
HYDROGEN CHLORIDE

SECTION V - HEALTH HAZARD DATA

LD50 5628 MG/KG ORAL RAT TLV 262 MG/M3
PEL 260 MG/M3

EMERGENCY AND FIRST AID PROCEDURES

EYES
FLUSH EYES WITH WATER FOR 15 MINUTES.
CONTACT A PHYSICIAN.

SKIN
FLUSH SKIN WITH LARGE VOLUMES OF WATER.

INHALATION
IMMEDIATELY MOVE TO FRESH AIR.
IF BREATHING STOPS, GIVE ARTIFICIAL RESPIRATION
CONTACT A PHYSICIAN

INGESTION
NEVER GIVE ANYTHING BY MOUTH TO AN UNCONSCIOUS PERSON
NEVER TRY TO MAKE AN UNCONSCIOUS PERSON VOMIT
GIVE 2 TABLESPOONS OF BAKING SODA IN A GLASS OF WATER
PRESS FINGERS TO BACK OF TONGUE TO INDUCE VOMITING.
IMMEDIATELY CONTACT A PHYSICIAN.

EFFECTS OF OVEREXPOSURE

HARMFUL IF INHALED
MAY BE FATAL IF SWALLOWED
HEADACHE
NAUSEA
GASTROINTESTINAL DISTURBANCES
REPORTED MUTAGEN
BLINDNESS

SECTION VI - REACTIVITY DATA

STABILITY STABLE.

CONDITIONS TO AVOID

N/A

INCOMPATIBILITY

OXIDIZING AGENTS

CATALOG NO 40173 (REORDER PRODUCT BY THIS NO.)
PRODUCT NAME CIS-1,2-DICHLOROETHENE 1X1ML, MEOH, 5000UG/ML
DATA SHEET NO I401730
CIS-1,2-DICHLOROETHENE

SECTION VI - REACTIVITY DATA

* CONTINUED *
CHROMIC ANHYDRIDE, LEAD PERCHLORATE, PERCHLORIC ACIDS

HAZARDOUS DECOMPOSITION PRODUCTS

HYDROGEN CHLORIDE

HAZARDOUS POLYMERIZATION WILL NOT OCCUR.

CONDITIONS TO AVOID

N/A

SECTION VII - SPILL OR LEAK PROCEDURES

STEPS TO BE TAKEN IN CASE MATERIAL IS RELEASED OR SPILLED

TAKE UP WITH ABSORBENT MATERIAL.
VENTILATE AREA.
ELIMINATE ALL IGNITION SOURCES.

WASTE DISPOSAL METHOD

COMPLY WITH ALL APPLICABLE FEDERAL, STATE, OR LOCAL REGULATIONS

SECTION VIII - SPECIAL PROTECTION INFORMATION

RESPIRATORY PROTECTION (SPECIFIC TYPE)

WEAR FACE MASK WITH ORGANIC VAPOR CANISTER.

PROTECTIVE GLOVES

WEAR RUBBER GLOVES.

EYE PROTECTION

WEAR PROTECTIVE GLASSES.

VENTILATION

USE ONLY IN WELL VENTILATED AREA.

SPECIAL

N/A

CATALOG NO 40173 (REORDER PRODUCT BY THIS NO.)
PRODUCT NAME CIS-1,2-DICHLOROETHENE 1X1ML, MEOH, 5000UG/ML
DATA SHEET NO I401730
CIS-1,2-DICHLOROETHENE

SECTION VIII - SPECIAL PROTECTION INFORMATION

* CONTINUED *

OTHER PROTECTIVE EQUIPMENT

N/A

SECTION IX - SPECIAL PRECAUTIONS

STORAGE AND HANDLING

REFRIGERATE IN SEALED CONTAINER.
KEEP AWAY FROM OXIDIZERS.
KEEP AWAY FROM IGNITION SOURCES.

OTHER PRECAUTIONS

AVOID EYE OR SKIN CONTACT.
AVOID BREATHING VAPORS.

WHILE THE INFORMATION AND RECOMMENDATIONS SET FORTH HEREIN ARE BELIEVED TO BE ACCURATE AS OF THE DATE HEREOF, SUPELCO, INC. MAKES NO WARRANTY WITH RESPECT THERETO AND DISCLAIMS ALL LIABILITY FROM RELIANCE THEREON.

LAST REVISED 6/29/93

COPYRIGHT 1995 SUPELCO, INC. SUPELCO PARK BELLEFONTE, PA 16823-0048
ALL RIGHTS RESERVED TWX 510-670-3600

CUSTOMER P.O. NO.

DATE 7/27/95 MATERIAL SAFETY DATA SHEET PAGE 1

SECTION I -GENERAL INFORMATION

CATALOG NO 48625 (REORDER PRODUCT BY THIS NO.)
PRODUCT NAME VINYL CHLORIDE
DATA SHEET NO I486250
VINYL CHLORIDE
FORMULA MIXTURE FORMULA WEIGHT
CAS NRTECS
SYNONYM ANALYTICAL STANDARD IN METHANOL
MANUFACTURER SUPELCO INC. PHONE 814-359-3441
ADDRESS SUPELCO PARK, BELLEFONTE, PA 16823-0048

SECTION II - HAZARDOUS INGREDIENTS OF MIXTURES

CHEMICAL NAME
COMMON NAME - PERCENTAGE - CAS #
(FORMULA) - PEL(UNITS) - TLV(UNITS)
LD50 VALUE - CONDITIONS

ETHENE, CHLORO-
VINYL CHLORIDE 0.02 75-01-4
C2H3Cl 1 PPM 5 PPM
500 MG/KG ORAL RAT SEE FOOTNOTE(1,5,6,7)

METHANOL
METHANOL 99.98 67-56-1
CH3OH 260 MG/M3 262 MG/M3
5628 MG/KG ORAL RAT SEE FOOTNOTE(6)

FOOTNOTES

1 CLASSIFIED BY IARC AS A CLASS 1 CARCINOGEN.
5 OSHA REGULATED CARCINOGEN, 29 CFR 1910.
6 SUBJECT TO THE REPORTING REQUIREMENTS OF SARA TITLE III, SECTION 313.
7 CLASSIFIED BY NTP AS A GROUP A CARCINOGEN.

SECTION III - PHYSICAL DATA

BOILING POINT 65 C MM MELTING POINT -98 C
VAPOR PRESSURE 100 MM C VAPOR DENSITY 1.10 C (AIR=1)
SPECIFIC GRAVITY .790 G/ML C (WATER=1) PERCENT VOLATILE BY VOLUME 10C
WATER SOLUBILITY 100 EVAPORATION RATE >1 (ETHER=1)
APPEARANCE CLEAR COLORLESS LIQUID

SECTION IV - FIRE AND EXPLOSION HAZARD DATA

FLASH POINT 50 F FLAMMABLE LIMITS LEL 6.0 UEL 36.5

EXTINGUISHING MEDIA

CO2
DRY CHEMICAL
ALCOHOL FOAM.

SPECIAL FIRE FIGHTING PROCEDURES

WEAR SELF CONTAINED BREATHING APPARATUS WHEN FIGHTING A CHEMICAL FIRE.

UNUSUAL FIRE AND EXPLOSION HAZARDS

N/A

CATALOG NO 48625 (REORDER PRODUCT BY THIS NO.)
PRODUCT NAME VINYL CHLORIDE
DATA SHEET NO I486250
VINYL CHLORIDE
* CONTINUED *

SECTION V - HEALTH HAZARD DATA

LD50	5628	MG/KG	ORAL RAT	TLV	262	MG/M3
PEL	260	MG/M3				

EMERGENCY AND FIRST AID PROCEDURES

EYES
FLUSH EYES WITH WATER FOR 15 MINUTES.
CONTACT A PHYSICIAN.

SKIN
FLUSH SKIN WITH LARGE VOLUMES OF WATER.

INHALATION
IMMEDIATELY MOVE TO FRESH AIR.
IF BREATHING STOPS, GIVE ARTIFICIAL RESPIRATION
CONTACT A PHYSICIAN

INGESTION
NEVER GIVE ANYTHING BY MOUTH TO AN UNCONSCIOUS PERSON
NEVER TRY TO MAKE AN UNCONSCIOUS PERSON VOMIT
GIVE 2 TABLESPOONS OF BAKING SODA IN A GLASS OF WATER
PRESS FINGERS TO BACK OF TONGUE TO INDUCE VOMITING.
IMMEDIATELY CONTACT A PHYSICIAN.

EFFECTS OF OVEREXPOSURE

HARMFUL IF INHALED
MAY BE FATAL IF SWALLOWED
CONTAINS LOW CONCENTRATION(S) OF MATERIAL(S) KNOWN TO THE STATE OF CALIFORNIA TO
CAUSE CANCER.
SUCH CONCENTRATION(S) IS/ARE SUBSTANTIALLY BELOW OSHA-HCS THRESHOLDS WHICH WOULD REQUIRE LISTING HEREIN AS A COMPONENT OF THIS MIXTURE.
HEADACHE
NAUSEA
GASTROINTESTINAL DISTURBANCES
BLINDNESS

SECTION VI - REACTIVITY DATA

STABILITY STABLE.

CONDITIONS TO AVOID

N/A

CATALOG NO 48625 (REORDER PRODUCT BY THIS NO.)
PRODUCT NAME VINYL CHLORIDE
DATA SHEET NO I486250
VINYL CHLORIDE

SECTION VI - REACTIVITY DATA

* CONTINUED *

INCOMPATIBILITY

OXIDIZING AGENTS
CHROMIC ANHYDRIDE, LEAD PERCHLORATE, PERCHLORIC ACIDS

HAZARDOUS DECOMPOSITION PRODUCTS

N/A

HAZARDOUS POLYMERIZATION WILL NOT OCCUR.

CONDITIONS TO AVOID

N/A

SECTION VII - SPILL OR LEAK PROCEDURES

STEPS TO BE TAKEN IN CASE MATERIAL IS RELEASED OR SPILLED

TAKE UP WITH ABSORBENT MATERIAL.
VENTILATE AREA.
ELIMINATE ALL IGNITION SOURCES.

WASTE DISPOSAL METHOD

COMPLY WITH ALL APPLICABLE FEDERAL, STATE, OR LOCAL REGULATIONS

SECTION VIII - SPECIAL PROTECTION INFORMATION

RESPIRATORY PROTECTION (SPECIFIC TYPE)

WEAR FACE MASK WITH ORGANIC VAPOR CANISTER.

PROTECTIVE GLOVES

WEAR RUBBER GLOVES.

EYE PROTECTION

WEAR PROTECTIVE GLASSES.

VENTILATION

USE ONLY IN WELL VENTILATED AREA.

CATALOG NO 48625 (REORDER PRODUCT BY THIS NO.)
PRODUCT NAME VINYL CHLORIDE
DATA SHEET NO I486250
VINYL CHLORIDE

SECTION VIII - SPECIAL PROTECTION INFORMATION

* CONTINUED *

SPECIAL

N/A

OTHER PROTECTIVE EQUIPMENT

N/A

SECTION IX - SPECIAL PRECAUTIONS

STORAGE AND HANDLING

STORE IN SEALED CONTAINER IN COOL, DRY LOCATION.
KEEP AWAY FROM OXIDIZERS.
KEEP AWAY FROM IGNITION SOURCES.

OTHER PRECAUTIONS

AVOID EYE OR SKIN CONTACT.
AVOID BREATHING VAPORS.

WHILE THE INFORMATION AND RECOMMENDATIONS SET FORTH HEREIN ARE BELIEVED TO BE ACCURATE AS OF THE DATE HEREOF, SUPELCO, INC. MAKES NO WARRANTY WITH RESPECT THERETO AND DISCLAIMS ALL LIABILITY FROM RELIANCE THEREON.

LAST REVISED 12/09/92

MATERIAL SAFETY DATA SHEET

GENIUM PUBLISHING CORPORATION
1145 CATALYN STREET
SCHENECTADY, NY 12303-1836 USA
(518) 377-8855

GENIUM PUBLISHING CORP.

NO. 98

HELIUM

Date March 1982

SECTION I. MATERIAL IDENTIFICATION

MATERIAL NAME: HELIUM
DESCRIPTION: Helium is inert, elemental gas; supplied as a compressed gas (typically 2200 psig at 70F) in steel cylinders or as cryogenic liquid in special insulated cylinders or containers. GE Material D27A11; He; CAS #007 440 597.
MANUFACTURER: Available from many suppliers, including:

Air Products and Chemical, Inc.
Box 538
Allentown, PA 18105 Tel: (215) 481-4911

Union Carbide Corp, Linde Div.
Ridgebury Road
Danbury, CT 06817

SECTION II. INGREDIENTS AND HAZARDS	%	HAZARD DATA
Helium	>99	Simple asphyxiant*
*ACGIH (1981) TLV for a simple asphyxiant gas is a minimal atmosphere O_2 content of 18% by volume at 1 atmosphere pressure.		

SECTION III. PHYSICAL DATA

Boiling point, 1 atm, deg C	-268.9	Melting point at 25.3 atm, deg C	-272
Vapor density (Air=1)	0.138	Critical temp, deg C	-267.9
Solubility in water at 20C, v/v H_2O	.0086	Critical pressure, atm	2.261
		Atomic weight	4.003

Appearance and Odor: Colorless, odorless, tasteless gas, or a cryogenic liquid

SECTION IV. FIRE AND EXPLOSION DATA

Flash Point and Method	Autoignition Temp.	Flammability Limits In Air	LOWER	UPPER
Non-Flammable				

Extinguishing Media: Use that which is appropriate for surrounding fire.
Cylinders should be cooled with water to prevent rupture of storage cylinders.
Firefighters should wear self-contained breating apparatus.

SECTION V. REACTIVITY DATA

The compressed gas is stable in steel cylinders at room temperature. The cryogenic liquid can be stored at low temperature in an insulated, vented container.
It is a monatomic, chemically inactive gas; lighter than air.
Liquid helium condenses and solidifies all other gases. It will cause oxygen from air to condense on an uninsulated surface. Liquefied oxygen could become a fire hazard.
Solidified air could block the vent. Use in contact with metals and materials compatible with cryogenic liquids. (Carbon steel is brittle at liquid helium temperature.)

Copyright © 1984 Genium Publishing Corporation
Any commercial use without publisher's specific permission is prohibited.

SECTION VI. HEALTH HAZARD INFORMATION

TLV Simple asphyxiant

Helium is nontoxic and a simple asphyxiant. It can displace air in enclosed spaces lowering oxygen levels. Symptoms will vary and are dependent upon oxygen concentration and length of exposure. When the oxygen content of air drops below 15%, symptoms of fatigue, sleepiness, loss of coordination, confusion and collaspe can occur.

Contact with liquid helium or cold gas evolved from the liquid can cause freeze burns.

FIRST AID:

Contact with liquid or cold gas: Promptly flush areas affected with lots of tepid water (42°C) to reduce freezing of tissue. (Do not apply direct heat to affected areas!) Loosely apply dry, sterile, bulky dressings to protect area from infection and from further injury. Have victim exercise affected area while it is being warmed.

Inhalation: (Caution! Would-be rescuers need to be concerned with their own safety in oxygen-deficient areas. Use self-contained breathing equipment.) Remove victim to fresh air. Quickly restore and/or support breathing as required, administering oxygen if available. (Use mouth-to-mouth resuscitation to get air into lungs quickly.)

Seek prompt medical assistance for further treatment, observation and support.

SECTION VII. SPILL, LEAK, AND DISPOSAL PROCEDURES

Notify safety personnel of significant leaks or spills. Disperse liquid with water spray. Provide adequate ventilation! Evacuate area until adequate ventilation can restore a safe air/oxygen level. Emergency personnel need self-contained breathing equipment, and protective clothing against cryogenic liquid. Gas leaks can be detected by painting the suspected area with a soapy water solution and checking for bubble formation.

DISPOSAL: Remove leaking cylinders to outdoors or place into a hood with good forced ventilation. Allow gas to discharge at a moderate rate. Close valve with a little pressure remaining and return to supplier marked defective.

Follow Federal, State, and Local regulations.

SECTION VIII. SPECIAL PROTECTION INFORMATION

Provide ventilation when helium is used or stored in enclosed areas to prevent oxygen-deficient atmospheres (18 vol % O_2 minimum). Provide air-supplied or self-contained breathing equipment for emergency or nonroutine situations where the helium level is excessive. Use a safety line and a stand-by worker when personnel enter a hazardous helium-enriched area. (The stand-by worker to have self-contained breathing apparatus immediately available).

Those handling liquid helium should wear approved insulating gloves, safety glasses or goggles, and other protective clothing, as required by use conditions, to prevent skin contact with liquid or cold gas.

Safety shoes and safety glasses are recommended for those handling gas cylinders.

Equipment used in confined spaces should be thoroughly checked for leaks.

SECTION IX. SPECIAL PRECAUTIONS AND COMMENTS

Store in a cool, dry, well-ventilated, low fire-risk area. Protect containers from physical damage. Keep away from sources of heat. Follow general safety procedures for handling and storing of compressed gas cylinders. Use pressure relief on liquid He containers that prevents entry of air (a backflow of air could freeze to a solid and plug lines or vent). Periodically check vents of stored He. Obtain supplier information on handling. See Compressed Gas Association Pamphlet P-1.

An 18% oxygen conc. in the air is the minimum recommended for working without special breathing equipment. Avoid contact with liquid helium which will cause severe burns.

Label: Nonflammable, Green label

DOT I.D. No. UN 1046 (compressed); UN 1963 (liquid)

DOT Classification: NONFLAMMABLE

DATA SOURCE(S) CODE: 1,2,4-8,10,17

APPROVALS: MIS J.M. Kuiken

CRD

Industrial Hygiene and Safety JW 3-25-82

MEDICAL REVIEW: 6 April 1982

Judgments as to the suitability of information herein for purchaser's purposes are necessarily purchaser's responsibility. Therefore, although reasonable care has been taken in the preparation of such information, Genium Publishing Corporation extends no warranties, makes no representations and assumes no responsibility as to the accuracy or suitability of such information for application to purchaser's intended purposes or for consequences of its use.

MATERIAL SAFETY DATA SHEET

GENIUM PUBLISHING CORPORATION
1145 CATALYN ST., SCHENECTADY, NY 12303 USA (518) 377-8854

MSDS # 354
METHYL ALCOHOL
Revision C
Issued:
Revised: September, 1985

From Genium's MSDS Collection, to be used as a reference.

SECTION 1. MATERIAL IDENTIFICATION

17

MATERIAL NAME: METHYL ALCOHOL

OTHER DESIGNATIONS: Methanol, Wood Alcohol, Carbinol, Wood Naphtha, Methyl Hydroxide, Monohydroxy Methane, CH_3OH, CAS #67-56-1

MANUFACTURER/SUPPLIER: Available from several suppliers, including; E.I. DuPont DeNemours & Co. (302- 774-2290
Chemicals & Pigments Dept (800) 441-9442
1007 Market St. Wilmington, DE 19898

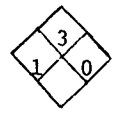

SECTION 2. INGREDIENTS AND HAZARDS

	%	HAZARD DATA
METHYL ALCOHOL CH_3-OH	ca 100	8 hr TWA: 200 ppm, or 260 mg/m^3* (Skin) STEL: 250 ppm, or 310 mg/m^3 HUMAN Eye: 5 ppm, primary irritation dose Oral: LDLo: 340 mg/kg Inhalation: TCLo: 86,000 mg/m^3 - Toxic irritant effects (systemic)

* Current OSHA Standard; ACGIH (1985-86) TLV adds (skin) notation.

NIOSH has recommended a TWA standard of 200 ppm with a fifteen minute ceiling of 800 ppm. This ceiling is well above the TLV STEL of 250 ppm.

SECTION 3. PHYSICAL DATA

Boiling Point, 1 atm	148.5°F (64.7°C)
Vapor density (Air=1)	1.11
Vapor pressure @ 21°C, mmHg ...	100
@ 50°C, mmHg ...	400
Water Solubility	Totally Miscible
Viscosity @ 20°C, cps	0.59
Specific gravity, 20°/4°C ...	0.791
Melting point	-144°F (-97.8°C)
Volatiles, %	ca 100
Evaporation rate (BuAc=1) ...	5.9
Molecular weight	32.04

APPEARANCE & ODOR: Clear, colorless, highly polar liquid with a characteristic alcohol odor. The odor recognition threshold (100% of test panel) is 53.3 ppm

SECTION 4. FIRE AND EXPLOSION DATA

Flash Point and Method	Autoignition Temp.	Flammability Limits in Air	Lower	Upper
60.8°F (12°C) Closed Cup	725°F (385°C)	% by Volume	6	36.5

EXTINGUISHING MEDIA: Use carbon dioxide, dry chemical, or alcohol type foam. Do not use a solid stream of water since the stream will scatter and spread the fire. Use water spray to cool fire-exposed tanks/containers. Fires involving Methyl Alcohol are Class IB; use a blanketing effect to smother fire.
Methyl Alcohol is a moderate explosion hazard and a dangerous fire hazard when exposed to heat, sparks, flame or oxidizers. Its vapors are heavier than air and may travel a considerable distance to an ignition source and flashback. Firefighters should wear self-contained breathing apparatus and full protective clothing when fighting fires involving Methyl Alcohol.

SECTION 5. REACTIVITY DATA

Methyl Alcohol is stable in closed containers at room temperature under normal storage and handling conditions. It does not undergo hazardous polymerization. This material may react violently with chromic anhydride; iodine plus ethyl alcohol, and mercuric oxide; lead perchlorate; perchloric acid plus ethyl alcohol; dimethyl formamide plus phosphorous; potassium hydroxide plus chlorloform; sodium hydroxide plus chloroform. It may also react with metallic aluminum at high temperatures.
Methyl Alcohol is incompatible with strong oxidizing agents (eg., nitrates, perchlorate or sulfuric acid), active metals, acetaldehyde, ethylene oxide, isocyanates, beryllium dihydride, chloroform, and potassium tert-butoxide. It may attack some forms of plastics and rubber. Thermal decomposition or burning will produce carbon monoxide, carbon dioxide and possible toxic formaldehyde and unburned methanol.

Copyright © on issue date, Genium Publishing Corporation
Any commercial use without publisher's specific permission is prohibited.

SECTION 6. HEALTH HAZARD INFORMATION

TLV 200 ppm (skin) or 260 mg/m^3

Methanol is a poisonous, narcotic chemical that may exert its effects through inhalation, skin absorption, or ingestion. Elimination of Methanol from the body is slow, and the toxic effects can be compounded by repeated excessive exposures over several days. Toxic effects are exerted upon the CNS, especially the optic nerve and possibly the retinae. Symptoms of overexposure include dizziness, visual impairment, nausea, respiratory failure, muscular incoordination and narcosis. Visual disturbances may clear temporarily then re-occur and progress to blindness. Prolonged or repeated contact with the skin may cause dermatitis, erythema, and scaling. Vapors of Methanol are mildly irritating to the eyes, while direct contact with the liquid may cause irritation, pain and transient corneal opacity. Ingestion of Methanol can cause blindness and death. The fatal dose is 100-250 ml, although death from ingestion of less than 33 ml has been reported.
FIRST AID: EYE CONTACT: Immediately flush eyes, including under eyelids, with plenty of running water for at least 15 minutes. Get medical attention if irritation persists. SKIN CONTACT: Flush exposed area with water while removing contaminated clothing. Wash with soap and water. Get medical attention if irritation persists. INHALATION: Remove victim to fresh air. Restore and/or support breathing as needed. Get medical help (Inplant Paramedic, community). INGESTION: Give victim 3-4 glasses of water or milk and induce vomiting by sticking finger to back of throat. Contact a Poison Control Center or physician. Transport victim to a medical facility immediately. Do not induce vomiting or give anything to drink if victim is unconscious or having convulsions. Get medical attention (Inplant, paramedic, community).

SECTION 7. SPILL, LEAK AND DISPOSAL PROCEDURES

Notify safety personnel of large spills or leaks. Remove all sources of heat and ignition. Provide maximum explosion-proof ventilation. Evacuate all personnel from the area except for those involved in clean-up. Remove leaking container to safe place if feasible. Clean-up personnel should wear protective clothing, gloves, boots, and a self-contained breathing apparatus. Absorb small quantities on paper towel, vermiculite, or other absorbent and place in closed container for disposal. Dike large spills and collect for reclamation or disposal. Water spray may be used to knock down vapor and to dilute and flush spill away from sensitive areas. Do not flush to sewer. Keep out of watersheds and waterways.
DISPOSAL: Place in suitable container for disposal by a licensed contractor or burn in an approved incinerator. Waste solvent may be reclaimed via filtration and distillation procedures. Methyl Alcohol has been designated as a hazardous waste by the EPA (RCRA CFR 261.33). The EPA Hazardous Waste No. is U154. Aquatic Toxicity Rating: TLm96: Over 1000 ppm.

SECTION 8. SPECIAL PROTECTION INFORMATION

Provide general and local exhaust ventilation (explosion-proof) to meet TLV requirements. For emergency or non-routine exposures where the TLV may be exceeded, wear an appropriate NIOSH-approved respirator. All electrical service in use or storage areas should have an explosion-proof design.
Prevent skin and eye contact by wearing rubber gloves and splash goggles or safety glasses. Use protective aprons, boots and face shield as necessary when splashing may occur.
Eyewash stations and safety showers should be available in areas of use and handling. Provide suitable training to those working with Methanol. Monitor the workplace and keep accurate records.

Contact lenses pose a special hazard; soft lenses may absorb and all lenses concentrate irritants.

SECTION 9. SPECIAL PRECAUTIONS AND COMMENTS

Store in tightly closed containers in a dry, well-ventilated area away from strong oxidizing agents, heat, sparks and open flame. Protect container from physical damage. When transferring or pouring Methyl Alcohol, ground and bond containers and equipment to prevent static sparks. Use non-sparking tools.
Do not smoke in areas of use or storage. Use with adequate ventilation. Do not breathe vapors. Avoid contact with eyes and skin. This material is poisonous when introduced into the body metabolism. DO NOT INGEST!!!
Provide preplacement medical exams and periodic medical surveillance for industrially exposed workers with emphasis on neurological and visual functions, liver, and kidney systems.
DOT CLASSIFICATION: Flammable liquid, UN1230 DOT LABEL: Flammable liquid.

DATA SOURCE(S) CODE (See Glossary) 1, 2, 4-12, 16, 19, 20, 23-26, 31, 34, 37-39, 43, 47, 63, 79. R.

Judgements as to the suitablity of information herein for purchaser's purposes are necessarily purchaser's responsibility. Therefore, although reasonable care has been taken in the preparation of such information, Genium Publishing Corporation extends no warranties, makes no representations and assumes no responsibility as to the accuracy or suitablity of such information for application to purchaser's intended purposes or for consequences of its use.

APPROVALS JC Accrocco, 11/85
INDUST. HYGIENE/SAFETY [signature] 11-85
MEDICAL REVIEW: [signature] Dec 85

Copyright © September 1, 1985

Material Safety Data Sheet

From Genium's Reference Collection
Genium Publishing Corporation
1145 Catalyn Street
Schenectady, NY 12303-1836 USA
(518) 377-8855

GENIUM PUBLISHING CORP.

No. 7

NITRIC ACID
(Revision C)
Issued: October 1980
Revised: August 1988

SECTION 1. MATERIAL IDENTIFICATION

26

Material Name: NITRIC ACID

Description (Origin/Uses): Used to dissolve noble metals, for etching and cleaning metals, to make organic nitrates and nitrocompounds, to destroy residues of organic matter, and in explosives.

NFPA

Other Designations: Red Fuming Nitric Acid; HNO_3; CAS No. 7697-37-2

HMIS

H 3	R 1
F 0	I 4
R 1	S 4
PPG*	K 0

*See sect. 8

Manufacturer: Contact your supplier or distributor. Consult the latest edition of the *Chemicalweek Buyers' Guide* (Genium ref. 73) for a list of suppliers.

SECTION 2. INGREDIENTS AND HAZARDS	%	EXPOSURE LIMITS
Nitric Acid, CAS No. 7697-37-2	*	**OSHA PEL** 8-Hr TWA: 2 ppm, 5 mg/m³ **ACGIH TLVs, 1987-88** TLV-TWA: 2 ppm, 5 mg/m³ TLV-STEL: 4 ppm, 10 mg/m³ **Toxicity Data**** Mouse, Inhalation, LC_{50}: 67 ppm/4 Hrs
*Contact your supplier to determine the percent by weight of nitric acid in the purchased product. Water is the other component of the product. **See NIOSH, *RTECS* (QU5775000, QU5900000), for additional data with references to reproductive effects.		

SECTION 3. PHYSICAL DATA

Boiling Point: Ca 251°F (122°C)*
Specific Gravity (H_2O = 1): 1.4*
pH: Very Acidic
Water Solubility (%): Complete
Molecular Weight: 63 Grams/Mole
Melting Point: Ca -30°F (-34°C)*

Appearance and Odor: A water white to slightly yellow liquid that darkens to a brownish color on aging and exposure to light; characteristic nitrogen dioxide (NO_2) odor.

*These properties are for the approximately 68%-by-weight nitric acid that is commercially available.

SECTION 4. FIRE AND EXPLOSION DATA

Flash Point and Method	Autoignition Temperature	Flammability Limits in Air	LOWER	UPPER
*	*	% by Volume	*	*

Extinguishing Media: *Nitric acid does not burn. Use extinguishing agents that will put out the surrounding fire. Use a water spray to dilute nitric acid during fires and to absorb liberated oxides of nitrogen.

Unusual Fire or Explosion Hazards: Although nitric acid does not burn, it is a strong oxidizing agent that can react with combustible materials to cause fires. Also, it can react with metals to liberate extremely flammable hydrogen gas. If this happens, direct fire-fighting procedures at this evolved hydrogen gas.

Special Fire-fighting Procedures: Wear a self-contained breathing apparatus (SCBA) with a full facepiece operated in the pressure-demand or positive-pressure mode. Choose protective equipment carefully (see sect. 5, Conditions to Avoid).

SECTION 5. REACTIVITY DATA

Nitric acid is stable in closed containers at room temperature under normal storage and handling conditions. It cannot undergo hazardous polymerization.

Chemical Incompatibilities: Nitric acid reacts explosively with metallic powders, carbides, hydrogen sulfide, and turpentine. Contact with organic materials such as wood, paper, sawdust, or alcohol, etc., may cause fires. Combustible materials can attain an increased flammability after being exposed to nitric acid even if they do not immediately catch fire.

Conditions to Avoid: Avoid any contact with incompatible chemicals. Because it is so reactive, always establish another material's compatibility with nitric acid before mixing the two materials. This applies to the selection of safety and handling equipment, because nitric acid can attack some forms of coatings, plastics, and rubber.

Hazardous Products of Decomposition: Various nitrogen oxides, including nitric oxide (NO), nitrogen dioxide (NO_2), nitrous oxide (N_2O), as well as nitric acid mist or vapor, can be produced by the decomposition reactions that can affect the nitric acid during fires.

Copyright © 1988 Genium Publishing Corporation.
Any commercial use or reproduction without the publisher's permission is prohibited.

SECTION 6. HEALTH HAZARD INFORMATION

Nitric acid is not listed as a carcinogen by the NTP, IARC, or OSHA.

Summary of Risks: This material is corrosive to any body tissue it contacts. Dental erosion is also reported.

Medical Conditions Aggravated by Long-Term Exposure: None reported. **Target Organs:** Skin, eyes, mucous membranes of the respiratory tract, teeth. **Primary Entry:** Inhalation, skin contact. **Acute Effects:** Irritation and/or corrosive burns of skin, eyes, and upper respiratory tract (URT), delayed pulmonary edema, pneumonitis, bronchitis, and dental erosion. **Chronic Effects:** None reported.

FIRST AID: **Eyes.** Immediately flush eyes, including under the eyelids, gently but thoroughly with plenty of running water for at least 15 minutes. Treat for eye burns. **Skin.** Immediately wash the affected area with soap and water. Watch for chemical skin burns and treat them accordingly. **Inhalation.** Remove the exposed person to fresh air; restore and/or support his or her breathing as needed. If the exposure is severe, hospitilization with careful monitoring by trained medical personnel to detect the delayed onset of severe pulmonary edema (lungs filled with fluid) is recommended for at least 72 hours. **Ingestion.** Call a poison control center. Never give anything by mouth to someone who is unconscious or convulsing. Do not induce vomiting. If the exposed person is responsive, give him or her one or two glasses of milk or water to drink as quickly as possible after exposure.

GET MEDICAL HELP (IN PLANT, PARAMEDIC, COMMUNITY) FOR ALL EXPOSURES. Seek prompt medical assistance for further treatment, observation, and support after first aid. NOTE TO PHYSICIAN: Wash affected skin areas with a 5% solution of sodium bicarbonate ($NaHCO_3$). If ingested, the risk versus the benefit of the passage of a naso-gastric tube is debatable. Activated charcoal is of *no* value. Do *not* give the exposed person bicarbonate to neutralize the material.

SECTION 7. SPILL, LEAK, AND DISPOSAL PROCEDURES

Spill/Leak: Notify safety personnel, provide ventilation, and eliminate all sources of ignition immediately in case contact with metals should produce highly flammable hydrogen gas. Cleanup personnel need protection against contact with and inhalation of nitric acid (see sect. 8). Contain large spills and collect waste. Use water sprays to direct nitric acid away from incompatible chemicals (see sect. 5). Neutralize the spilled nitric acid with soda ash or sodium bicarbonate. Use an absorbent such as sand, earth, or vermiculite on the resulting slurry and place the neutralized nitric acid material into containers suitable for eventual disposal, reclamation, or destruction.

Waste Disposal: Consider reclamation, recycling, or destruction rather than disposal in a landfill. Contact your supplier or a licensed contractor for detailed recommendations. Follow Federal, state, and local regulations.

OSHA Designations

Air Contaminant (29 CFR 1910.1000 Subpart Z)

EPA Designations (40 CFR 302.4)

CERCLA Hazardous Substance, Reportable Quantity: 1000 lbs (454 kg), per Clean Water Act (CWA), Section 311 (b) (4)

SECTION 8. SPECIAL PROTECTION INFORMATION

Goggles: Always wear protective eyeglasses or chemical safety goggles. Where splashing of nitric acid solution is possible, wear a full face shield as a supplementary protective measure. Follow OSHA eye- and face-protection regulations (29 CFR 1910.133).

Respirator: Consult the *NIOSH Pocket Guide to Chemical Hazards* (Genium ref. 88) for general recommendations on proper respiratory procedures. Follow OSHA respirator regulations (29 CFR 1910.134). For emergency or nonroutine use (leaks or cleaning reactor vessels and storage tanks), wear an SCBA with a full facepiece operated in the pressure-demand or positive-pressure mode. **Warning:** Air-purifying respirators will *not* protect workers in oxygen-deficient atmospheres. **Other:** Wear impervious gloves, boots, aprons, gauntlets, etc., to prevent skin contact with nitric acid. Choose protective equipment carefully (see sect. 5, Conditions to Avoid).

Ventilation: Install and operate both general and local exhaust-ventilation systems powerful enough to maintain airborne concentrations of nitric acid below the OSHA PEL standard cited in section 2. Construct exhaust ducts and systems with material such as fiberglass, which resists attack by nitric acid. **Safety Stations:** Make emergency eyewash stations, washing facilities, and safety/quickdrench showers available in work areas. **Contaminated Equipment:** Contact lenses pose a special hazard; soft lenses may absorb irritants and all lenses concentrate them. Do *not* wear contact lenses in any work area. Remove contaminated clothing and launder it before wearing it again; clean nitric acid from shoes and equipment. **Comments:** *Practice good personal hygiene; always wash thoroughly after using this material.* Keep it off of your clothing and equipment. Avoid transferring it from your hands to your mouth while eating, drinking, or smoking. Do *not* eat, drink, or smoke in any work area. Provide preplacement and annual medical exams with emphasis on skin irritation to workers who are regularly exposed to nitric acid. Workers must receive training before handling this material in the workplace; even experienced workers should undergo refresher training periodically.

SECTION 9. SPECIAL PRECAUTIONS AND COMMENTS

Storage/Segregation: Store nitric acid in a cool, dry, well-ventilated area away from incompatible chemicals (see sect. 5). Consider *outside, isolated, or detached storage. Protect containers from direct sunlight.*

Special Handling/Storage: Build all storage facilities of nonflammable materials that are resistant to chemical attack by nitric acid. Protect containers from physical damage. Preplan for routine use and emergency response.

Engineering Controls: Proper ventilation is essential in bulk storage areas; consider installing an automatic monitoring system to detect hazardous levels of nitrogen oxides that can develop from this material.

Comments: Separate nitric acid from hydrazine, diethylenetriamine, fluorides, and all other corrosives except sulfuric acid and sulfur trioxide when shipping or transferring it.

Transportation Data (49 CFR 172.101-2)

DOT Shipping Name: (I) Nitric Acid, Fuming or (II) Nitric Acid, Over 40% or (III) Nitric Acid, 40% or Less

DOT Label: (I) Oxidizer and Poison or (II) Oxidizer and Corrosive or (III) Corrosive

DOT Hazard Class: (I) and (II) Oxidizer or (III) Corrosive Material

DOT ID Nos. (I) UN2032; (II) UN2031; (III) NA1760

IMO Class: 8 (All Types of Nitric Acid)

IMO Label: (I) Corrosive, Oxidizer, Poison; or (II) and (III) Corrosive

References: 1, 2, 26, 38, 84-94, 100, 112, 113, 114.

Judgments as to the suitability of information herein for purchaser's purposes are necessarily purchaser's responsibility. Therefore, although reasonable care has been taken in the preparation of such information, Genium Publishing Corp. extends no warranties, makes no representations and assumes no responsibility as to the accuracy or suitability of such information for application to purchaser's intended purposes or for consequences of its use.

Prepared by PJ Igoe, BS

Industrial Hygiene Review: DJ Wilson, CIH

Medical Review: MJ Hardies, MD

Copyright © 1988 Genium Publishing Corporation.
Any commercial use or reproduction without the publisher's permission is prohibited.

2.0 PROGRAMMABLE LOGIC CONTROLLER

A programmable logic controller (PLC) is being used to control operation of the interim remedial action groundwater treatment system at the Naval Air Warfare Center, Trenton, New Jersey. The unit is a GE Fanuc Series 90-30 PLC, consisting of 24 digital inputs, 5 digital outputs, 4 analog inputs, 4 analog outputs, and 16 relays. The PLC is upgradable to support remote operations, remote data transfer, and remote warning of alarm conditions. The PLC can also be expanded and/or modified to support changes in plant operations as they may occur in the future. This PLC provides full process control and retains historical process data for subsequent process analysis and reporting.

2.1 COMPONENTS OF THE PLC

The PLC receives inputs from instruments in the groundwater treatment process. These inputs include level switch positions, pressure differential switches, pulses from the influent and effluent flow totalizers, and pH readings. The PLC also prepares output signals for process control. These signals control the speed of the chemical metering pumps and the operation of each single speed pump. From this aspect, each sensor that provides a signal to the PLC, or piece of equipment that receives a signal from the PLC, can be considered to be part of the PLC system.

The PLC hardware consists of a 10-slot backplane, a power supply, a central processing unit (CPU), and various interchangeable modules selected to control the groundwater treatment system. The modules include three 8-channel digital input modules, one 5-channel digital output module, one 4-channel analog input module, two 2-channel analog output modules, and two 8-channel relay modules.

The PLC can be linked to an external computer for data exchange. An Epson Action Note 660C has been provided with the treatment system for this purpose. A copy of the spreadsheet program Quattro Pro for Windows has also been provided to transfer data from the PLC to log important process data.

The PLC - computer link includes several components. There is a link between the PLC and the PLC configuration and programming package. This link is established with a serial port cable and two adapters. Connection of these components is discussed in Section 2.2. Any changes of controller tuning constants, setpoints, etc. are performed through this data link. There is also a direct link between the PLC and a Quattro Pro spreadsheet. This link is established with the serial cable, cable adapters, and a Series 90 Protocol - Dynamic Data Exchange (SNP DDE) device driver. One copy of this driver has been procured for this project. This software is copy protected, and is keyed so that only one copy can be enabled at one time. Use of this device is documented in Section 2.2.

2.2 DATA RETRIEVAL

To retrieve data from the PLC, a few simple procedures are followed as outlined below:

a. Connect the PLC to your computer. To connect the PLC to your computer, use the cable and the adapters stored with the PLC.

   One adapter is used to convert the DB15 connector to the serial cable DB9 connector. This adapter attaches to the PLC in the front of the PLC power supply, which is the module on the left end of the PLC rack. This adapter converts the GE Series 90 Protocol (SNP) to the RS-232 communications standard (Part Number HE693SNP232).

The second adapter is included in the middle of the serial cable which connects to the computer. The second adapter includes GE's key for communications with the PLC, which means that this adapter should not be swapped-out. The GE part number of this adapter is HE693XTADP.

The PLC is configured to communicate over COM2. This serial port should not be used by any device within the computer. The computer presently uses COM1 for the trackball and COM3 for any external PCMCA devices. COM2 port communications between the computer and the PLC will be set at 19200 baud, 8 data bits, 1 stop bit, and odd parity. If communication problems are experienced, make sure that there is no conflict from other devices.

b. After the serial cable with the adapters and the external power cable are attached to the computer, turn it on by depressing the on button for approximately 5 seconds. The computer is configured to automatically boot into MS Windows. Double click on the SNPWIN Driver icon, and start the SNP Driver program.

The GE SNP DDE driver program will start, and the status page will be displayed.
SELECT "ACTIONS"
TOGGLE "STOP/RUN DRIVER"
SELECT "YES" - Disable data updating
SELECT "▼" icon in the upper right portion of the GE SNP DDE Driver window to minimize the driver application

Double CLICK on the Quattro Pro for Windows icon in the Windows Program Manager, and start Quattro Pro for Windows.
SELECT "FILE"
SELECT "OPEN"
SELECT file "WTRENTON.WB1"
SELECT "OK"
SELECT "▼" in the upper right portion of the window to minimize the spreadsheet application

CLICK the mouse on the "GE SNP DDE DRIVER" icon at the *bottom* of the screen to restore the application.
SELECT "ACTIONS"
TOGGLE "STOP/RUN DRIVER"

CLICK the mouse on "Quattro Pro for Windows, WTRENTON.WB1" icon, on the *bottom* of the screen.

Data from the PLC now enters the spreadsheet.

To record this data,
CLICK on the "Save Data" button located in spreadsheet cell A8.
SELECT "Replace" spreadsheet in the next screen

CAUTION: Do not overwrite WTRENTON.WB1. This spreadsheet is configured to link to the PLC data.

EXIT Quattro Pro by selecting "FILE", and selecting "EXIT".
EXIT the GE SNP DDE Driver by selecting "FILE" and selecting "EXIT".

Close all open windows by selecting the "-" icon in the upper left of each window, and select "close" until WINDOWS is exited.

To view the saved data, open Quattro Pro for Windows, and open file PLCDATA.WB1. When the spreadsheet loads, a "HOTLINKS" window appears. Select "NONE" for no hotlinks, and then select "OK".

It appears that you have lost all the data (because it is not stored here). Select folder "B" at the lower left portion of the screen, and press the *keyboard* "Home" key. The saved PLC data now appears in unscaled, or RAW data, format. Select folder "C" at the lower left portion of the screen to view the scaled process data.

CAUTION: The spreadsheet file "PLCDATA.WB1" will be overwritten each time PLC data is saved. It is expected that retrieved data will be processed prior to the next data save. The PLC will hold process data for half a month prior to overwriting its internal data registers. Each saved PLCDATA.WB1 spreadsheet is time and date stamped, so that new data can be differentiated from previously stored data. If you want to archive the PLCDATA.WB1 files, then you should make a copy of the file with a different name, and embed an appropriate archive format within its name (i.e. PLCDAT01.WB1, PLCDAT02.WB1, etc.)

2.3 FORMAT OF RETRIEVED DATA (RAW DATA FROM PLC)

Nine data fields are recorded for historical analysis of treatment system operations. These data fields include the date, the time, the influent and effluent flow totalizer readings, Equalization Tank pH, pH Adjustment Tank pH, Discharge Tank pH, and metering pump speeds for the caustic, polymer/flocculant, and sulfuric acid metering pumps.

Time and Day of the Month: Data are logged four times a day (0100 hrs, 0700 hrs, 1300 hrs, and 1900 hrs). The day of the month is also logged with the time mark.

Flow Totalizers: Both the influent and effluent flow totalizers are configured to provide the PLC with a pulse signal for each gallon of water that passes through the totalizer. The PLC will count these pulses and record the total each time data are stored. The PLC counters will count up to 1,000,000 gallons in increments of 100 gallons, and then resets to 0, and resume counting upwards from 0. The totalizers at the flowmeters themselves will count up to 10,000,000 gallons prior to restarting at 0.

pH Readings: The Equalization Tank pH, the pH Adjustment Tank pH, and the Discharge Tank pH will be recorded by the PLC. The PLC reading of 0 represents a pH of 5. The PLC reading of 32,760 represents a pH of 10.

Metering Pump Speed: The Caustic, Polymer/Flocculant, and Sulfuric Acid Metering Pump speeds will be recorded by the PLC. A PLC value of 0 represents a pump speed of 0%. A PLC value of 32,760 represents 100% of metering pump speed. The Caustic and Acid Metering Pumps are flow paced, with pH trim control. The polymer metering pump is solely flow paced.

Sludge Pump: Even though the operating status of the sludge pump is not recorded, a mention about its operation by the PLC is noteworthy. The PLC is programmed to energize this pump for an interval of time every 24 hours. Presently, it is programmed to operate for 2 minutes in the 24 hour cycle. The on-line time, and overall time slice can easily be changed by changing a value in one data register.

2.4 DOCUMENTATION OF SYSTEM OPERATIONAL DATA

A printout of the spreadsheet PLCDATA.WB1, folders A, B, and C, is provided on the following pages.

2.5 TROUBLESHOOTING

Even though effort was taken to streamline the PLC operation, difficulties of one sort or another are bound to arise. If a problem arises that you cannot resolve, the following people may be contacted:

Douglas Watt
OHM Remediation Services
(609) 588-6464 - office

John DiPietro
Advent Electric
(610) 277-6610 - office

GE HOTLINE
(800) 828-5747

2.6 PLC INPUT AND OUTPUT IDENTIFIERS

The pages provided at the end of this chapter summarize the PLC program input and output designations. Also provided are the reference descriptions used for each input and output and identification of spare inputs, outputs, and data storage capacity. Clarification of any items in this system may be made by referencing the manufacturer literature in Appendix K.

2.7 LADDER LOGIC

Each PLC-controlled unit has an associated ladder logic. For example, in referring to the ladder logic printout provided at the end of this chapter, Rung 7 controls operation of the recovery well submersible pump. The following inputs control operation of this pump:

- WELL_LL Low-Low Level in Recovery Well
- EQ_HH High-High Level in Equalization Tank
- SND_PDS Sand Filter Pressure Differential Switch
- CBN_PDS Carbon Filter Pressure Differential Switch
- SUMP_HH Indoor Sump High-High Level
- BAG_PDS Bag Filter Pressure Differential Switch
- WELL_LS Well Level Switch (Low and High Level)

If any of the switches change state due to the associated alarm condition, the well pump will be shut off. If no alarm conditions are present, the well pump will cycle on with well "high" level and off with well "low" level (WELL_LS).

Moving to Rung 8, the Equalization Tank Discharge Pump (EQ_PUMP) is controlled by low and high level switches in the Equalization Tank (EQ_LS) and the level in the pH Adjustment Tank. If the pH Adjustment Tank high-high level alarm is activated (ADJ_HH), then the Equalization Tank Discharge Pump will shut off.

West Trenton PLC Data
OHM Project 16546

Download Time & Date:
05-Sep-95
02:27 PM

	HR_Date	Totalizer GW_IN	Totalizer GW_OUT	EQ_Tank pH	Adj_Tank pH	Cln_Tank pH	NaOH Pump Speed	Polymer Pump Speed	H2SO4 Pump Speed
		VAL*100 gal	VAL*100 gal	5+VAL/6552 s.u.	5+VAL/6552 s.u.	5+VAL/6552 s.u.	VAL/327.6 0 - 100%	VAL/327.6 0 -100%	VAL/327.6 0 - 100%
	NA								
Raw Data	NA								
	NA								
	NA								
	NA								
	NA								
	NA								
	NA								
	NA								
	NA								
	NA								
	NA								
	NA								
	NA								
	NA								
	NA								
	NA								
	NA								
	NA								
	NA								
	NA								
	NA								
	NA								
	NA								
	NA								
	NA								
	NA								
	NA								
	NA								
	NA								
	NA								
	NA								
	NA								
	NA								
	NA								
	NA								
	NA								
	NA								
	NA								
	NA								
	NA								
	NA								
	NA								
	NA								
	NA								
	NA								
	NA								
	NA								
	NA								
	NA								
	NA								
	NA								
	NA								
	NA								
	NA								
	NA								
	NA								
	NA								
	NA								
	NA								
	NA								
	NA								
	NA								
	NA								

West Trenton PLC Data
OHM Project 16546

Download Time & Date:
22-Aug-95
10:21 AM

	HR_Date	Totalizer GW_IN	Totalizer GW_OUT	EQ_Tank pH	Adj_Tank pH	Cln_Tank pH	NaOH Pump Speed	Polymer Pump Speed	H2SO4 Pump Speed
		VAL*100	VAL*100	5+VAL/6552	5+VAL/6552	5+VAL/6552	VAL/327.6	VAL/327.6	VAL/327.6
		gal	gal	s.u.	s.u.	s.u.	0 - 100%	0 -100%	0 - 100%
	NA								
Raw Data	NA								
	NA								
	NA								
	NA								
	NA								
	NA								
	NA								
	NA								
	NA								
	NA								
	NA								
	NA								
	NA								
	NA								
	NA								
	NA								
	NA								
	NA								
	NA								
	NA								
	NA								
	NA								
	NA								
	NA								
	NA								
	NA								
	NA								
	NA								
	NA								
	NA								
	NA								
	NA								
	NA								
	NA								
	NA								
	NA								
	NA								
	NA								
	NA								
	NA								
	NA								
	NA								
	NA								
	NA								
	NA								
	NA								
	NA								
	NA								
	NA								
	NA								
	NA								
	NA								
	NA								
	NA								
	NA								
	NA								
	NA								
	NA								
	NA								
	NA								
	NA								
	NA								
	NA								

West Trenton PLC Data
OHM Project 16546

Download Time & Date:
05-Sep-95
02:27 PM

led Data

HR_Date	Totalizer GW_IN gal	Totalizer GW_OUT gal	EQ_Tank pH s.u.	Adj_Tank pH s.u.	Cln_Tank pH s.u.	NaOH Pump *Speed* 0 - 100%	Polymer Pump *Speed* 0 - 100%	H2SO4 Pump *Speed* 0 - 100%
NA	0	0	5.00	5.00	5.00	0	0	0
NA	0	0	5.00	5.00	5.00	0	0	0
NA	0	0	5.00	5.00	5.00	0	0	0
NA	0	0	5.00	5.00	5.00	0	0	0
NA	0	0	5.00	5.00	5.00	0	0	0
NA	0	0	5.00	5.00	5.00	0	0	0
NA	0	0	5.00	5.00	5.00	0	0	0
NA	0	0	5.00	5.00	5.00	0	0	0
NA	0	0	5.00	5.00	5.00	0	0	0
NA	0	0	5.00	5.00	5.00	0	0	0
NA	0	0	5.00	5.00	5.00	0	0	0
NA	0	0	5.00	5.00	5.00	0	0	0
NA	0	0	5.00	5.00	5.00	0	0	0
NA	0	0	5.00	5.00	5.00	0	0	0
NA	0	0	5.00	5.00	5.00	0	0	0
NA	0	0	5.00	5.00	5.00	0	0	0
NA	0	0	5.00	5.00	5.00	0	0	0
NA	0	0	5.00	5.00	5.00	0	0	0
NA	0	0	5.00	5.00	5.00	0	0	0
NA	0	0	5.00	5.00	5.00	0	0	0
NA	0	0	5.00	5.00	5.00	0	0	0
NA	0	0	5.00	5.00	5.00	0	0	0
NA	0	0	5.00	5.00	5.00	0	0	0
NA	0	0	5.00	5.00	5.00	0	0	0
NA	0	0	5.00	5.00	5.00	0	0	0
NA	0	0	5.00	5.00	5.00	0	0	0
NA	0	0	5.00	5.00	5.00	0	0	0
NA	0	0	5.00	5.00	5.00	0	0	0
NA	0	0	5.00	5.00	5.00	0	0	0
NA	0	0	5.00	5.00	5.00	0	0	0
NA	0	0	5.00	5.00	5.00	0	0	0
NA	0	0	5.00	5.00	5.00	0	0	0
NA	0	0	5.00	5.00	5.00	0	0	0
NA	0	0	5.00	5.00	5.00	0	0	0
NA	0	0	5.00	5.00	5.00	0	0	0
NA	0	0	5.00	5.00	5.00	0	0	0
NA	0	0	5.00	5.00	5.00	0	0	0
NA	0	0	5.00	5.00	5.00	0	0	0
NA	0	0	5.00	5.00	5.00	0	0	0
NA	0	0	5.00	5.00	5.00	0	0	0
NA	0	0	5.00	5.00	5.00	0	0	0
NA	0	0	5.00	5.00	5.00	0	0	0
NA	0	0	5.00	5.00	5.00	0	0	0
NA	0	0	5.00	5.00	5.00	0	0	0
NA	0	0	5.00	5.00	5.00	0	0	0
NA	0	0	5.00	5.00	5.00	0	0	0
NA	0	0	5.00	5.00	5.00	0	0	0
NA	0	0	5.00	5.00	5.00	0	0	0
NA	0	0	5.00	5.00	5.00	0	0	0
NA	0	0	5.00	5.00	5.00	0	0	0
NA	0	0	5.00	5.00	5.00	0	0	0
NA	0	0	5.00	5.00	5.00	0	0	0
NA	0	0	5.00	5.00	5.00	0	0	0
NA	0	0	5.00	5.00	5.00	0	0	0
NA	0	0	5.00	5.00	5.00	0	0	0
NA	0	0	5.00	5.00	5.00	0	0	0
NA	0	0	5.00	5.00	5.00	0	0	0
NA	0	0	5.00	5.00	5.00	0	0	0
NA	0	0	5.00	5.00	5.00	0	0	0
NA	0	0	5.00	5.00	5.00	0	0	0
NA	0	0	5.00	5.00	5.00	0	0	0
NA	0	0	5.00	5.00	5.00	0	0	0
NA	0	0	5.00	5.00	5.00	0	0	0
NA	0	0	5.00	5.00	5.00	0	0	0

Each rung may be reviewed this way to verify system logic. Also note that there is cascading control built into the logic. For example, if the pH Adjustment Tank Transfer Pump were to fail, the tank would continue to fill until the high-high level alarm was activated. When this alarm (ADJ_HH) is activated, the Equalization Tank Pump is shut down. As the level in the Equalization Tank continues to rise, the Equalization Tank high-high alarm would be activated (EQ_HH), which would in turn deactivate the Recovery Well Pump.

Turning to page 9 of the attached ladder logic printout, Rung 33 is the logic behind a forced system shutdown. Alarms which would cause a complete system shutdown include:

- SUMP_HH High-High Level in Indoor Sump
- CBN_PDS Carbon Filter High Pressure Differential
- SND_PDS Sand Filter High Pressure Differential
- BAG_PDS Bag Filter High Pressure Differential
- EQ_HH High-High Level in Equalization Tank
- LO_PH Low pH in Discharge Tank (<6.0 s.u.)
- HI_PH High pH in Discharge Tank (>10.0 s.u.)

Upon forced system shutdown, the autodialer is activated (see Rung 35).

Access to the PLC ladder logic program will be restricted to a limited number of personnel to avoid incorrect program changes.

2.8 TYPICAL WIRING SCHEMES

The following pages provide typical wiring schemes for pump wiring, level switch wiring, and shutdown level switch wiring. Actual wiring may also be referenced through the as-built drawing set.

OHM Corporation

COMPUTATION SHEET

Form No. 0048
Midwest Tech. Servs.
Rev. 08/89

FIGURE 2.1

Page _____ of _____

Proj. No.	Client	Location	Subject
16546	NORTHDIV	WEST TRENTON	PLC LOOP DIAGRAM

Preparer's Initials	Date	Reviewer's Initials	Date	Approver's Initials	Date
DW	1-10-95				

TYPICAL PUMP WIRING

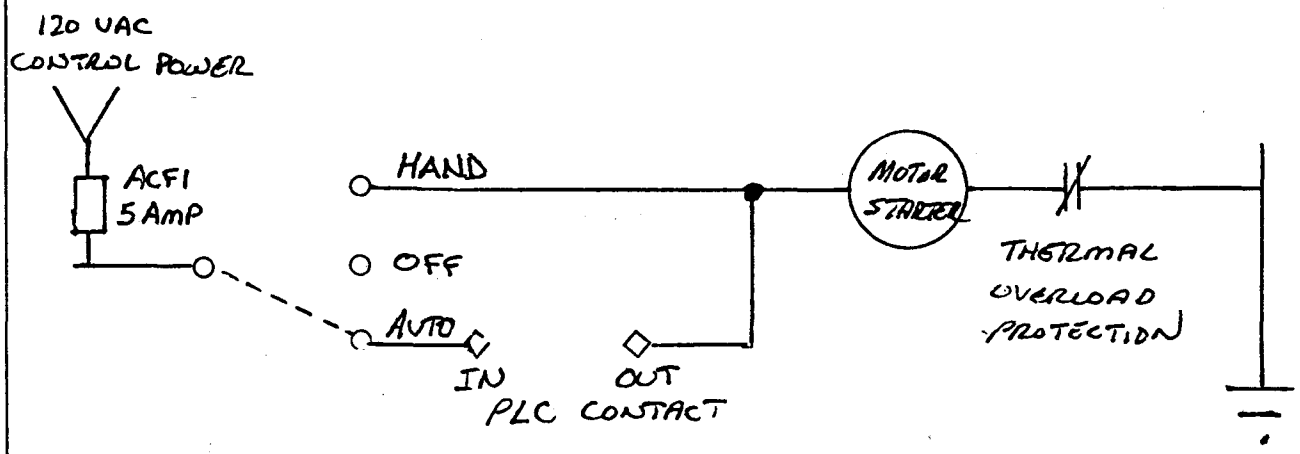

	DIGITAL SIGNAL ID	PLC IN SLOT-PIN	PLC OUT SLOT-PIN
GW RECOVERY PUMP	%Q0009	10-2	10-3
EQ TANK XFER PMP	%Q0010	10-4	10-5
SLUDGE XFER PUMP	%Q0011	10-6	10-7
ADJUSTMENT TNK PMP	%Q0012	10-8	10-9
BACKWASH PUMP	%Q0013	10-12	10-13
DISCHARGE PUMP	%Q0014	10-14	10-15

SEE INDIVIDUAL SHEETS FOR PLC PROGRAM CODE.

OHM Corporation

COMPUTATION SHEET

Form No. 0048
Midwest Tech. Servs.
Rev. 08/89

FIGURE 2.2

Page _____ of _____

Proj. No.	Client	Location	Subject
16546	NORTH DIV	WEST TRENTON	PLC LOOP DIAGRAM

Preparer's Initials	Date	Reviewer's Initials	Date	Approver's Initials	Date
DW	1-10-95				

TYPICAL LEVEL SWITCH WIRING

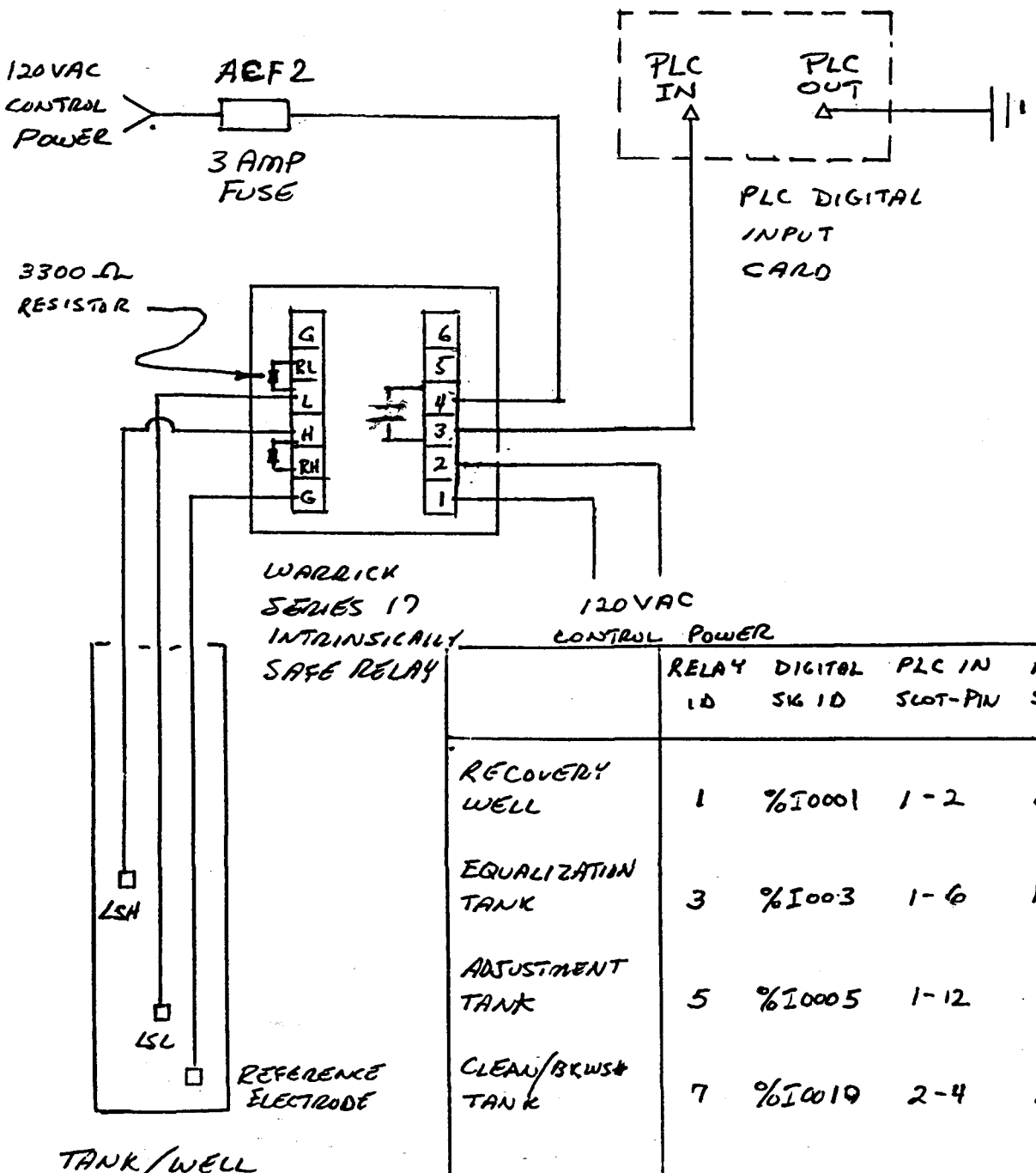

	RELAY ID	DIGITAL SIG ID	PLC IN SLOT-PIN	PLC OUT SLOT-PIN
RECOVERY WELL	1	%I0001	1-2	1-3
EQUALIZATION TANK	3	%I0003	1-6	1-7
ADJUSTMENT TANK	5	%I0005	1-12	1-13
CLEAN/BKWSH TANK	7	%I0019	2-4	2-5

OHM Corporation

COMPUTATION SHEET

Form No. 0048
Midwest Tech. Servs.
Rev. 08/89

FIGURE 2.3

Page _____ of _____

Proj. No.	Client	Location	Subject
16546	NORTHDIV	WEST TRENTON	PLC LOOP DIAGRAM

Preparer's Initials	Date	Reviewer's Initials	Date	Approver's Initials	Date
DW	1-10-95				

TYPICAL SHUTDOWN LEVEL SWITCH WIRING

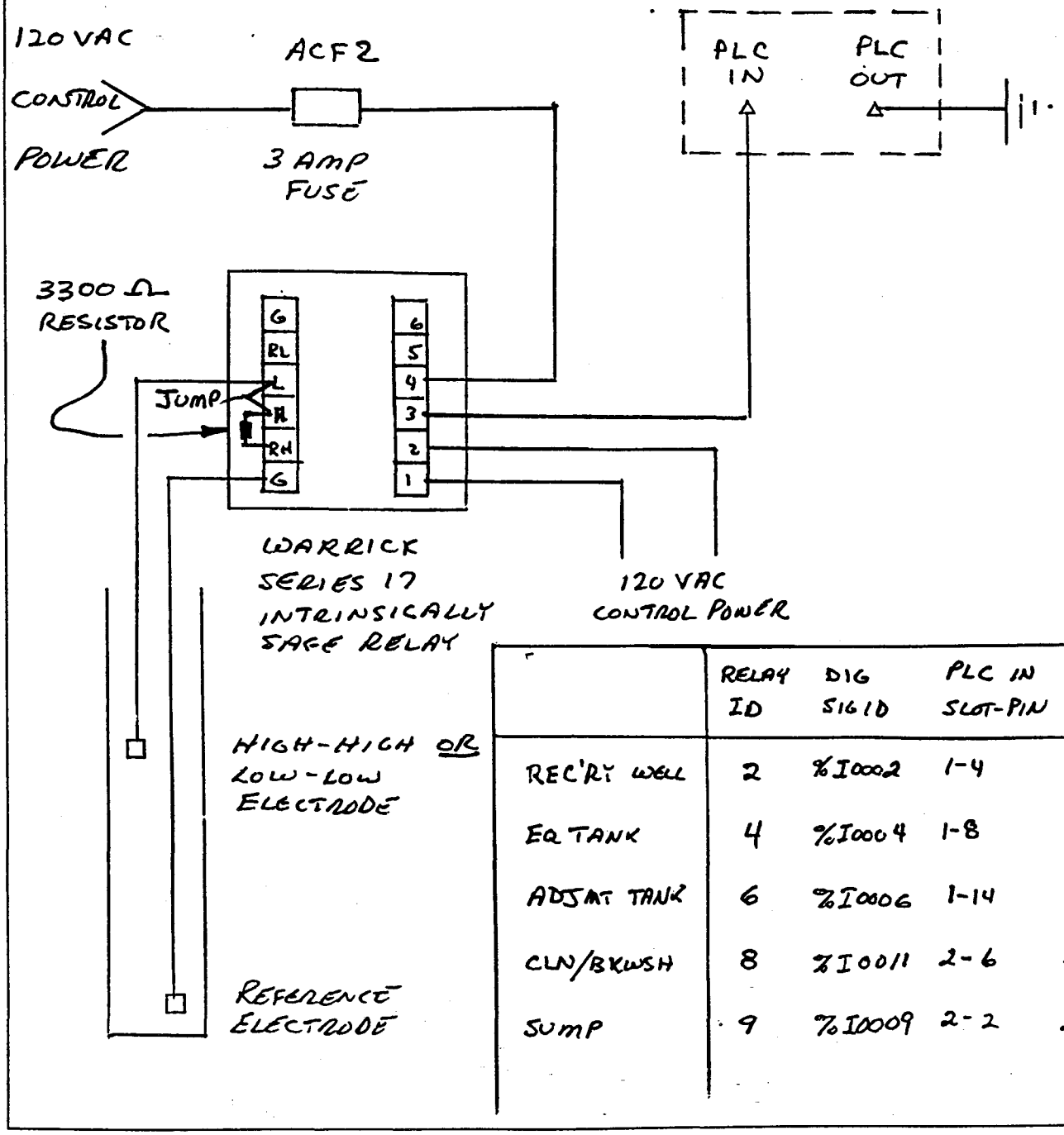

	RELAY ID	DIG SIG ID	PLC IN SLOT-PIN	PLC OUT SLOT-PIN
REC'R WELL	2	%I0002	1-4	1-5
EQ TANK	4	%I0004	1-8	1-9
ADJMT TANK	6	%I0006	1-14	1-15
CLN/BKWSH	8	%I0011	2-6	2-7
SUMP	9	%I0009	2-2	2-3

CHAPTER 2.0 - ATTACHMENT 1
PLC INPUT AND OUTPUT IDENTIFIERS

West Trenton NAWC Groundwater Treatment System
PLC Program Documentation

```
 GGGG EEEEE       FFFFF  AAA  N   N U   U  CCCC
G     E           F     A   A NN  N U   U C
G GGG EEEE        FFF   AAAAA N N N U   U C
G   G E           F     A   A N  NN U   U C
 GGG  EEEEE       F     A   A N   N  UUU   CCCC


 AAA  U   U TTTTT  OOO  M   M  AAA  TTTTT IIIII  OOO  N   N
A   A U   U   T   O   O MM MM A   A   T     I   O   O NN  N
AAAAA U   U   T   O   O M M M AAAAA   T     I   O   O N N N
A   A U   U   T   O   O M   M A   A   T     I   O   O N  NN
A   A  UUU    T    OOO  M   M A   A   T   IIIII  OOO  N   N
```

```
(*****************************************************************************)
(*                                                                           *)
(*                          Program:  P16546                                 *)
(*                                                                           *)
(*       PLC PROGRAM ENVIRONMENT                HIGHEST REFERENCE USED       *)
(*    ---------------------------------      ---------------------------     *)
(*                INPUT (%I):      512                  INPUT:   %I0107      *)
(*               OUTPUT (%Q):      512                 OUTPUT:   %Q0170      *)
(*             INTERNAL (%M):     1024                INTERNAL:   %M0002      *)
(*          GLOBAL DATA (%G):     1280             GLOBAL DATA:      NONE     *)
(*            TEMPORARY (%T):      256               TEMPORARY:   %T0016      *)
(*             REGISTER (%R):     2048                REGISTER:   %R0810      *)
(*        ANALOG INPUT (%AI):      128            ANALOG INPUT:   %AI0003     *)
(*       ANALOG OUTPUT (%AQ):       64           ANALOG OUTPUT:   %AQ017      *)
(*                                                                           *)
(*                     PROGRAM SIZE (BYTES):    10800                        *)
(*                                                                           *)
(*                                                                           *)
(*****************************************************************************)
```

```
(*****************************************************************************)
(*                                                                           *)
(*                            BLOCK:  _MAIN                                  *)
(*                                                                           *)
(*                                                                           *)
(*                        BLOCK SIZE (BYTES): 10796                          *)
(*                      DECLARATIONS (ENTRIES):   129                        *)
(*                                                                           *)
(*                                                                           *)
(*                        HIGHEST REFERENCE USED                             *)
(*                      ---------------------------                          *)
(*                                                                           *)
(*                              INPUT (%I):   %I0107                         *)
(*                             OUTPUT (%Q):   %Q0170                         *)
(*                           INTERNAL (%M):   %M0002                         *)
(*                         GLOBAL DATA (%G):      NONE                       *)
(*                           TEMPORARY (%T):   %T0016                        *)
(*                            REGISTER (%R):   %R0810                        *)
(*                       ANALOG INPUT (%AI):   %AI0003                       *)
(*                      ANALOG OUTPUT (%AQ):   %AQ017                        *)
(*                                                                           *)
(*****************************************************************************)
```

Naval Air Warfare Center
West Trenton, New Jersey
PLC Loop Documentation

Slot 1
Central Processing Unit
No I/O

Slot 2
Digital Inputs:

%I0001	Recovery Well Pump Signal. Combined LSL & LSH signals.
%I0002	Recovery Well LSLL.
%I0003	Equalization Tank Transfer Pump Signal. Combined LSL & LSH signals.
%I0004	Equalization Tank LSHH.
%I0005	Adjustment Tank Transfer Pump Signal. Combined LSL & LSH signals.
%I0006	Adjustment Tank LSHH.
%I0007	Sand Filter PDS
%I0008	Carbon Filter PDS

Slot 3
Digital Inputs:

%I0009	Building Sump LSHH
%I0010	Clean Water/Backwash Tank Discharge Pump Signal. Combined LSL & LSH signals.
%I0011	Clean Water/Backwash Tank LSHH.
%I0012	Recovered Groundwater Totalizer
%I0013	Treated Groundwater Discharge Totalizer
%I0014	Bag Filter PDS
%I0015	EQ Tank LSL
%I0016	Spare

Slot 4
Digital Inputs:

%I0017	Clean Water pH < 6.0
%I0018	Clean Water pH > 9.0
%I0019	Spare
%I0020	Spare
%I0021	Spare
%I0022	Spare
%I0023	Spare
%I0024	Spare

Naval Air Warfare Center
West Trenton, New Jersey
PLC Loop Documentation

Slot 5
Analog Inputs:

%AI0001	Equalization Tank pH Analyzer Transmitter
%AI0002	Adjustment Tank pH Analyzer Transmitter
%AI0003	Clean Water/Backwash Tank pH Analyzer Transmitter
%AI0004	Spare

Slot 6
Relays:

%Q0161	EQ Tank Recirculation Pump
%Q0162	Adjustment Tank Recirculation Pump
%Q0163	~~Spare~~ System Run Enable
%Q0164	Spare
%Q0165	Spare
%Q0166	Spare
%Q0167	Spare
%q0168	Spare

Slot 7
Analog Outputs:

%AQ0001	NaOH Metering Pump Speed
%AQ0002	Polymer Metering Pump Speed

Slot 8
Analog Outputs:

%AQ0003	H_2SO_4 Metering Pump Speed
%AQ0004	Spare

Naval Air Warfare Center
West Trenton, New Jersey
PLC Loop Documentation

Slot 9
Digital Outputs:

%Q0001	~~Common Trouble~~ Spare
%Q0002	Spare
%Q0003	Spare
%Q0004	Spare
%Q0005	Spare
%Q0006	Not Addressable
%Q0007	Not Addressable
%Q0008	Not Addressable

Slot 10
Relays:

%Q0009	Groundwater Recovery Pump Enable
%Q0010	Equalization Tank Transfer Pump Enable
%Q0011	Pneumatic Sludge Transfer Pump Enable
%Q0012	Adjustment Tank Transfer Pump Enable
%Q0013	Backwash Pump Enable
%Q0014	Discharge Pump Enable
%Q0015	Sludge Pump Suction Valve
%Q0016	Autodialer

V A R I A B L E D E C L A R A T I O N T A B L E

REFERENCE	NICKNAME	REFERENCE DESCRIPTION
%I0001	WELL_LS	Well Pump LSL & LSH
%I0002	WELL_LL	Well Pump LSLL
%I0003	EQ_LS	Eq. Tank LSL & LSH
%I0004	EQ_HH	Eq. Tank LSHH
%I0005	ADJ_LS	Adjustment Tank LSL & LSH
%I0006	ADJ_HH	Adjustment Tank LSHH
%I0007	SND_PDS	Sand Filter PDS
%I0008	CBN_PDS	Carbon Filter PDS
%I0009	SUMP_HH	Sump LSHH
%I0010	CLN_LS	Clean Water LSL & LSH
%I0011	CLN_HH	Clean Water LSHH
%I0012	GW_IN	Recovered GW Pulse Signal
%I0013	GW_OUT	Treated GW Pulse Signal
%I0014	BAG_PDS	Bag Filter PDS
%I0015	EQ_LSL	Eq. Tank LSL
%I0017	LO_PH	Clean Water Tank, pH below 6.0
%I0018	HI_PH	Clean Water Tank, pH above 9.0
%I0019	AJ_LSL	Adjustment Tank Low Level
%I0100	EQ_MAN	EQ. Tank pH Controller, Manual
%I0101	EQ_UP	EQ. Tank pH Controller, Man UP
%I0102	EQ_DWN	Eq. Tank pH Controller, Man DWN
%I0105	AD_MAN	Adj Tank pH Controller, Manual
%I0106	AD_UP	Adj Tank pH Controller, Man UP
%I0107	AD_DWN	Adj Tank pH Controller, Man DWN
%Q0001	RUNENAB	System Run Enable Permissive
%Q0002		
%Q0006	DATE	Date Stamp
%Q0007	SL_RSET	Sludge Pump Timer Reset
%Q0008	FLOPACE	NaOH Flow Pace
%Q0009	GW_PUMP	GW Well Submersible
%Q0010	EQ_PUMP	EQ. Tank Transfer Pump
%Q0011	SL_PUMP	Air to Sludge Transfer Pump
%Q0012	AD_PUMP	Adjustment Tank Pump
%Q0013	BK_PUMP	Backwash Pump
%Q0014	DCHPUMP	Discharge Pump
%Q0015	SL_SUCT	Suction Line to Sludge Pump
%Q0016	DIALER	Autodialer
%Q0017	FLOWPCE	Adj Tank Acid Flow Pace
%Q0021	EQPHOUT	EQ Tank Controller Output
%Q0022	AJPHOUT	Adj Tank Controller Output
%Q0030		%Q0030 - %Q0094 DATA TO
%Q0031		MEMORY FLAGS
%Q0032		
%Q0033		
%Q0091		
%Q0095	SHUTDWN	System Shutdown w/o self reset
%Q0096	SETRSET	CLN_HH SET/RESET COIL
%Q0097		CLN-HH
%Q0099	TIMER	Sludge Pump Timer
%Q0100	TIMER2	Sludge Pump Timer
%Q0098		AVAILABLE

%Q0101		
%Q0102		
%Q0161	EQ_CIRC	EQ recirculation Pump
%Q0162	AJ_CIRC	Adjustment Tank Recirc Pump
%Q0170		
%Q0250		
%M0001	IN_RSET	Recovered GW Totalizer Reset
%M0002	OUTRSET	Treated GW Totalizer Reset
%R0001		%R0001 – %R0639
%R0002		PROCESS DATA TO MEMORY REGISTERS
%R0003		%RXXX0 REGISTERS NOT USED
%R0004		(E.G. R0010, R0020, etc)
%R0005		
%R0006		
%R0007		
%R0008		
%R0009		
%R0011		
%R0012		
%R0013		
%R0014		
%R0601		
%R0641		%R0641 – %R0646 TIME & DATE STAMP
%R0642		
%R0644		
%R0645		
%R0647	HR_DATE	Hour, Day of the Month
%R0648	SEC_MIN	Seconds, Minutes
%R0650 - 52	IN_TOTL	Recovered GW Totalizer
%R0653 - 55	OUTTOTL	Treated GW Totalizer
%R0656 - 58	SLDGTMR	Sludge Pump Timer
%R0659	EQFLOPA	EQ Tank Flow Pace Signal
%R0660	SPEQPH	EQ Tank pH Set Point
%R0668		EQ TANK PID OUTPUT MODIFIER
%R0669	OUTMUL	EQ pH Controller Output Multiply
%R0670 - %R0709		
%R0672	SAM_PER	Controller Sampling Period
%R0673	EQ+DEAD	EQ Controller Dead Band
%R0674	EQ-DEAD	EQ Controller Dead Band -
%R0675	EQ_PROP	EQ Proportional
%R0676	EQ_DER	EQ Derivative
%R0677	EQ_INT	EQ Intrgral
%R0679	EQ+CLMP	EQ Upper Clamp
%R0680	EQ-CLMP	EQ Lower Clamp
%R0681	EQ_SLEW	EQ Slew
%R0710	EQ_OUT	EQ Controller Output
%R0711	OUTDIV	EQ Controller Output Divider
%R0712		" " OUTPUT MODIFIER
%R0713	POLYMER	Polymer Flow Pace Signal
%R0714	AJPH_SP	Adj Tank pH Setpoint
%R0720 - 760		
%R0722	SMPLEPD	Adj Tank Controller Sample Perid
%R0723	AJ+DEAD	Adj Tank pos dead band
%R0724	AJ-DEAD	Adj Tank neg dead band

%R0725	AJ_PROP	Adj Tank proportional
%R0726	AJ_DER	Adj Tank derivative
%R0727	AJ_INT	Adj Tank integral
%R0729	AJ+CLMP	Adj Tank pos clamp
%R0730	AJ-CLMP	Adj Tank neg clamp
%R0760	AJ_OUT	Adj Tank output
%R0761	AJ_DIV	output divider
%R0762	AJ_MOUT	modified output
%R0763	AJ_FLOW	Flowpace
%R0764		ADJ TANK CONTROLLER MODIFIER
%R0765	AJ_MUL	output multiplier
%R0800 - 802	SLTMRCT	Sludge Timer Counter
%R0805 - 807		ADJ PUMP TIMER
%R0806		
%R0807		
%R0808 - 810		
%R0812 - 814		EQ CIRC PUMP TIMER
%R0~~813~~ 815-817		Flow counter, Influent Flow counter Effluent
%AI0001	EQ_PH	EQ Tank pH
%AI0002	AJ_PH	Adj Tank pH
%AI0003	CLN_PH	Clean Water pH
%AQ001	NAOHSPD	NaOH Pump Speed
%AQ002	POLYSPD	Polymer Pump Speed
%AQ003	ACIDSPD	Acid Pump Speed

I D E N T I F I E R T A B L E

IDENTIFIER	IDENTIFIER TYPE	IDENTIFIER DESCRIPTION
P16546	PROGRAM NAME	

OHM Corporation

COMPUTATION SHEET

Form No. 0048
Midwest Tech. Servs.
Rev. 08/89

HR_DATE

Page _____ of _____

Proj. No.	Client	Location	Subject

Preparer's Initials	Date	Reviewer's Initials	Date	Approver's Initials	Date

	R644	R645		BEGINING REGISTER
17	0101	0000	31	0001
	0107		32	0011
	0113	103	33	0021
	0119	104	34	0031
18	0201	105	35	0041
	0207	106	36	0051
	0213	107	37	0061
	0219	108	38	0071
19	0301	109	39	0081
	0307	110	40	0091
	0313	111	41	0101
	0319	112	42	0111
20	0401	113	43	0121
	0407	114	44	0131
	0413	115	45	0141
	0419	116	46	0151
21	0501	117	47	0161
	0507	118	48	0171
	0513	119	49	0181
	0519	120	50	0191
22	0601	121	51	0201
	0607	122	52	0211
	0613	123	53	0221
	0619	124	54	0231
23	0701	125	55	0241
	0707	126	56	0251
	0713	127	57	0261
	0719	128	58	0271
24	0801	129	59	0281
	0807	130	60	0291
	0813	131	61	0301
	0819	132	62	0311
25	0901	0000	63	0321
	0907	134	64	0331
	0913	135	65	0341
	0919	136	66	0351
26	1001	137	67	0361
	1007	138	68	0371
	1013	139	69	0381
	1019	140	70	0391
27	1101	141	71	0401
	1107	142	72	0411
	1113	143	73	0421
	1119	144	74	0431
28	1201	145	75	0441
	1207	146	76	0451
	1213	147	77	0461
	1219	148	78	0471
29	1301	149	79	0481
	1307	150	80	0491
	1313	151	81	0501
	1319	152	82	0511
30	1401	153	83	0521
	1407	154	84	0531
	1413	155	85	0541
	1419	156	86	0551
31	1501	157	87	0561
	1507	158	88	0571
	1513	159	89	0581
	1519	160	90	0591
	1601	161	91	0601
	1607	162	92	0611
	1613	163	93	0621
	1619	164	94	0631

PID Parameter Block:

The parameter block associated with each PID function block contains the following data items. %Ref is the starting reference address assigned to the PID function block in the location field.

ENABLE %S0007
SP %R0660
PV %AI0001
MAN %I0100
MAN-UP %I0101
MAN-DWN %I0102
OK %Q0050
OUTPUT %R0710

1	%Ref+0000	Loop Number *	670
1	%Ref+0001	Algorithm **	671
10	%Ref+0002	Sample Period *	672
0	%Ref+0003	Dead Band + *	673
0	%Ref+0004	Dead Band — *	
10	%Ref+0005	1/100 Sec Proportional Gain *	675
0	%Ref+0006	Derivative *	
3	%Ref+0007	Repeat/1000 Sec Integral Rate *	
0	%Ref+0008	Bias *	
32000	%Ref+0009	Upper Clamp *	
0	%Ref+0010	Lower Clamp *	680
10	%Ref+0011	Minimum Slew Time *	
000	%Ref+0012	Config Word *	
000	%Ref+0013	Manual Command *	
1	%Ref+0014	Control Word **	
	%Ref+0015	Internal SP **	685
	%Ref+0016	Internal CV **	
	%Ref+0017	Internal PV **	
	%Ref+0018	Output **	
	%Ref+0019	Diff Term Storage **	
	%Ref+0020	Int Term Storage **	690
	%Ref+0021	Int Term Storage **	
	%Ref+0022	Slew Term Storage **	
	%Ref+0023	Clock **	
	%Ref+0024		
	%Ref+0025	(time last executed)	%R695
	%Ref+0026	Y Remainder Storage **	
0	%Ref+0027	Lower Range for SP, PV *	
14	%Ref+0028	Upper Range for SP, PV *	
	%Ref+0029	Reserved for internal use	%R699
	•		
	%Ref+0034		
	%Ref+0035	Reserved for external use	
	•		
	%Ref+0039		%R709

pH Range 5 & 12
S.P. = 8.5
3.5/5 = 70%
2240

S.P. = 8.5/14 × 32000 = 19429

* = May be set by the user.
** = Set and maintained by the PLC.

PID Parameter Block:

The parameter block associated with each PID function block contains the following data items. %Ref is the starting reference address assigned to the PID function block in the location field.

ENABLE %S0007
SP %R714 $\frac{7.0}{14} \times 32000$
PV %AI0002
MAN %I0105
MAN-UP %I0106
MAN-DWN %I0107
OK_ %Q0051
OUTPUT %R760

7

%Ref+0000	2	Loop Number *	%R 720
%Ref+0001	1	Algorithm **	
%Ref+0002	10	Sample Period *	
%Ref+0003	0	Dead Band + *	
%Ref+0004	0	Dead Band — *	
%Ref+0005	10	Proportional Gain *	725
%Ref+0006	0	Derivative *	
%Ref+0007	3	Integral Rate *	
%Ref+0008	0	Bias *	
%Ref+0009	32000	Upper Clamp *	
%Ref+0010	0	Lower Clamp *	730
%Ref+0011	10	Minimum Slew Time *	
%Ref+0012	000	Config Word *	
%Ref+0013	000	Manual Command *	
%Ref+0014		Control Word **	
%Ref+0015		Internal SP **	735
%Ref+0016		Internal CV **	
%Ref+0017		Internal PV **	
%Ref+0018		Output **	
%Ref+0019		Diff Term Storage **	
%Ref+0020		Int Term Storage **	740
%Ref+0021		Int Term Storage **	
%Ref+0022		Slew Term Storage **	
%Ref+0023		Clock **	
%Ref+0024			
%Ref+0025		(time last executed)	745
%Ref+0026		Y Remainder Storage **	
%Ref+0027	0	Lower Range for SP, PV *	
%Ref+0028	14	Upper Range for SP, PV *	
%Ref+0029		Reserved for internal use	
•			
%Ref+0034			754
%Ref+0035		Reserved for external use	755
•			
%Ref+0039			759

* = May be set by the user.
** = Set and maintained by the PLC.

pH range 5 to 1
S.P = 7.0
$\frac{2}{5} = 40\%$
32000 x .4 = 12800

CHAPTER 2.0 - ATTACHMENT 2
PLC LADDER LOGIC

West Trenton NAWC Groundwater Treatment System
PLC Program Documentation

```
 GGGG EEEEE       FFFFF  AAA  N   N U   U  CCCC
G     E           F     A   A NN  N U   U C
G GGG EEEE        FFF   AAAAA N N N U   U C
G   G E           F     A   A N  NN U   U C
 GGG  EEEEE       F     A   A N   N  UUU   CCCC


 AAA  U   U TTTTT  OOO  M   M  AAA  TTTTT IIIII  OOO  N   N
A   A U   U   T   O   O MM MM A   A   T     I   O   O NN  N
AAAAA U   U   T   O   O M M M AAAAA   T     I   O   O N N N
A   A U   U   T   O   O M   M A   A   T     I   O   O N  NN
A   A  UUU    T    OOO  M   M A   A   T   IIIII  OOO  N   N
```

```
(*****************************************************************************)
(*                                                                           *)
(*                          Program:  P16546                                 *)
(*                                                                           *)
(*       PLC PROGRAM ENVIRONMENT                HIGHEST REFERENCE USED       *)
(*    ---------------------------------      ---------------------------     *)
(*              INPUT (%I):      512                  INPUT:   %I0107        *)
(*             OUTPUT (%Q):      512                 OUTPUT:   %Q0170        *)
(*           INTERNAL (%M):     1024               INTERNAL:   %M0002        *)
(*        GLOBAL DATA (%G):     1280            GLOBAL DATA:      NONE       *)
(*          TEMPORARY (%T):      256              TEMPORARY:   %T0016        *)
(*           REGISTER (%R):     2048               REGISTER:   %R0810        *)
(*      ANALOG INPUT (%AI):      128           ANALOG INPUT:   %AI0003       *)
(*     ANALOG OUTPUT (%AQ):       64          ANALOG OUTPUT:   %AQ017        *)
(*                                                                           *)
(*                    PROGRAM SIZE (BYTES):    10800                         *)
(*                                                                           *)
(*                                                                           *)
(*****************************************************************************)
```

```
(*****************************************************************************)
(*                                                                           *)
(*                              BLOCK:  _MAIN                                *)
(*                                                                           *)
(*                                                                           *)
(*                          BLOCK SIZE (BYTES): 10796                        *)
(*                       DECLARATIONS (ENTRIES):   129                       *)
(*                                                                           *)
(*                                                                           *)
(*                         HIGHEST REFERENCE USED                            *)
(*                        ----------------------------                       *)
(*                                                                           *)
(*                               INPUT (%I):   %I0107                        *)
(*                              OUTPUT (%Q):   %Q0170                        *)
(*                            INTERNAL (%M):   %M0002                        *)
(*                         GLOBAL DATA (%G):      NONE                       *)
(*                           TEMPORARY (%T):   %T0016                        *)
(*                            REGISTER (%R):   %R0810                        *)
(*                      ANALOG INPUT (%AI):   %AI0003                        *)
(*                     ANALOG OUTPUT (%AQ):   %AQ017                         *)
(*                                                                           *)
(*****************************************************************************)
```

```
START OF LD  PROGRAM P16546   ]        (*                                    *)

[     VARIABLE DECLARATIONS     ]

[       BLOCK DECLARATIONS      ]

[     START OF PROGRAM LOGIC    ]

 << RUNG 4  STEP #0001 >>

ALW_ON  +------+          +------+                    +------+                  DATE
+--] [---+ SVC_+----------+BCD4_+------------------+BCD4_+--------------------( )--
         | REQ |          | TO_ |                    | TO_ |
         |     |          | INT |                    | INT |
 CONST -+FNC  | %R0644 -+IN  Q+-HR_DATE %R0645 -+IN  Q+-SEC_MIN
  00007 |     |          +------+                    +------+
        |     |
%R0641 -+PARM |
        +-----+

 << RUNG 5  STEP #0006 >>

 GW_IN  +------+                                                          IN_RSET
+--] [---+UPCTR+----------------------------------------------------------( )--
         |      |
 RSET    |      |
+--] [---+R     |
         |      |
 CONST -+PV     |
 +10000 |      |
        +------+
        IN_TOTL

 << RUNG 6  STEP #0010 >>

GW_OUT  +------+                                                          OUTRSET
+--] [---+UPCTR+----------------------------------------------------------( )--
         |      |
OUTRSET  |      |
+--] [---+R     |
         |      |
 CONST -+PV     |
 +10000 |      |
        +------+
        OUTTOTL

 << RUNG 7  STEP #0014 >>

WELL_LL  EQ_HH  SND_PDS CBN_PDS SUMP_HH BAG_PDS WELL_LS                   GW_PUMP
+--] [-----]/[-----]/[-----] [-----] [-----] [-----] [--------------------( )--
```

<< RUNG 8 STEP #0022 >>

EQ_LS ADJ_HH EQ_PUMP
+--] [-----]/[----------( )--

<< RUNG 9 STEP #0025 >>

ALW_ON +------+ TIMER
+--] [---+ EQ_ |+----------( )--
| | INT ||
| | ||
CONST -+I1 Q++
+00024 | |
| |
SLTMRCT-+I2 |
+------+

<< RUNG 10 STEP #0028 >>

%Q0030 +------+ TIMER2
+--] [---+UPCTR+----------( )--
| | |
TIMER | |
+--] [---+R |
| |
CONST -+PV |
+00023 | |
+------+
SLTMRCT

<< RUNG 11 STEP #0032 >>

TIMER2 +------+ SL_RSET
+--] [---+ LE_ |+----------( )--
| | INT ||
| | ||
CONST -+I1 Q++
+32760 | |
| |
SLDGTMR-+I2 |
+------+

<< RUNG 12 STEP #0035 >>

TIMER2 +------+ SL_PUMP
+--] [---+ONDTR+----------( )--
| |0.10s|
SL_RSET | |
+--] [---+R |
| |
CONST -+PV |
+01560 | |
+------+
SLDGTMR

<< RUNG 13 STEP #0039 >>

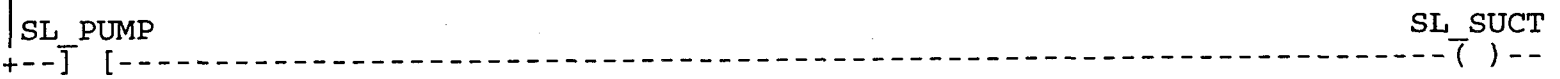

<< RUNG 14 STEP #0041 >>

<< RUNG 15 STEP #0043 >>

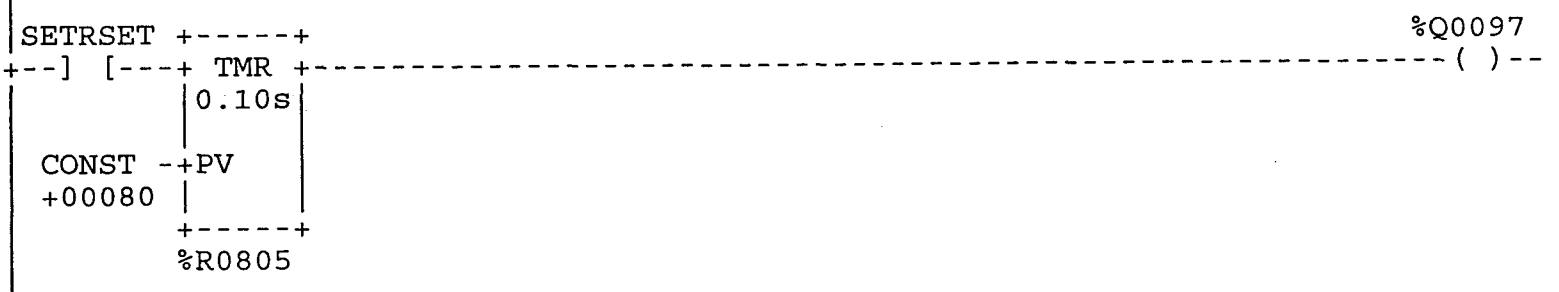

<< RUNG 16 STEP #0046 >>

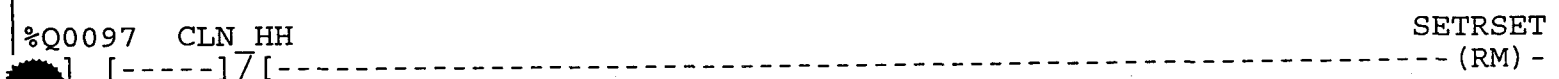

<< RUNG 17 STEP #0049 >>

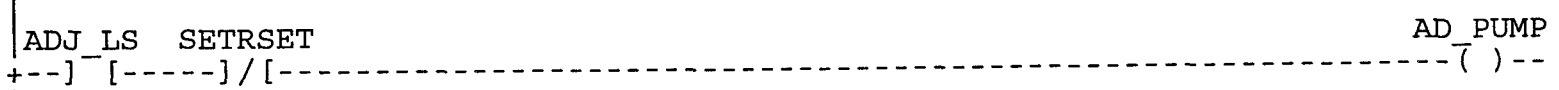

<< RUNG 18 STEP #0052 >>

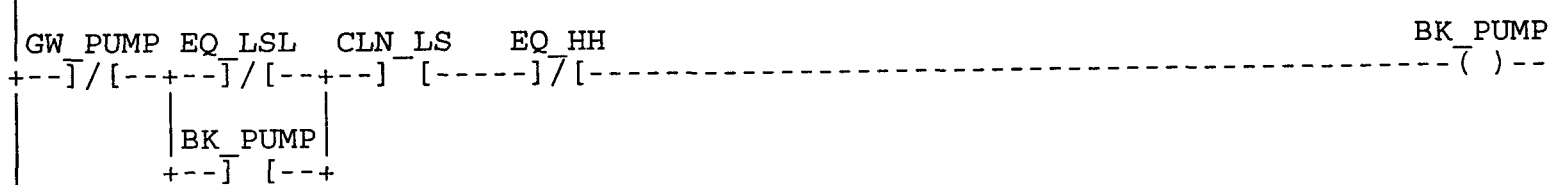

<< RUNG 19 STEP #0059 >>

<< RUNG 20 STEP #0063 >>

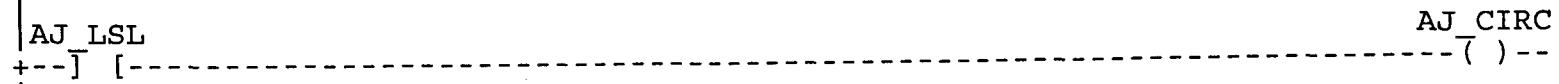

<< RUNG 21 STEP #0065 >>

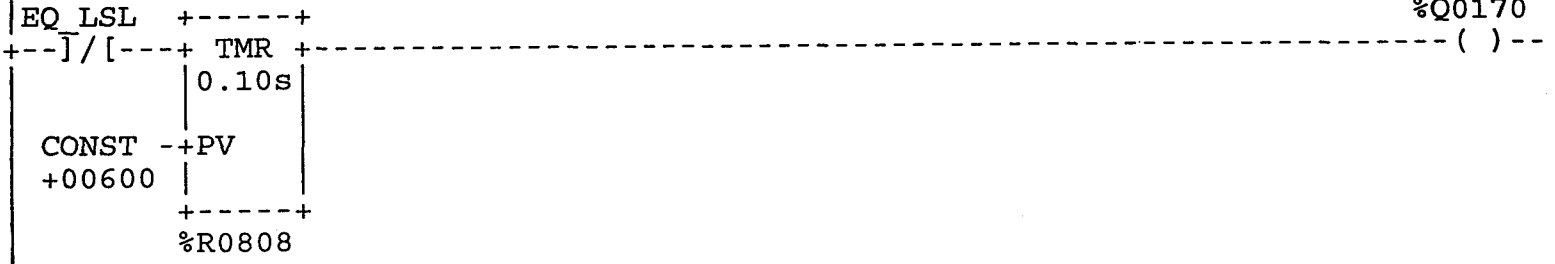

<< RUNG 22 STEP #0068 >>

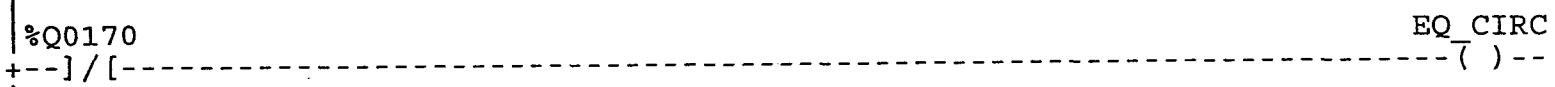

<< RUNG 23 STEP #0070 >>

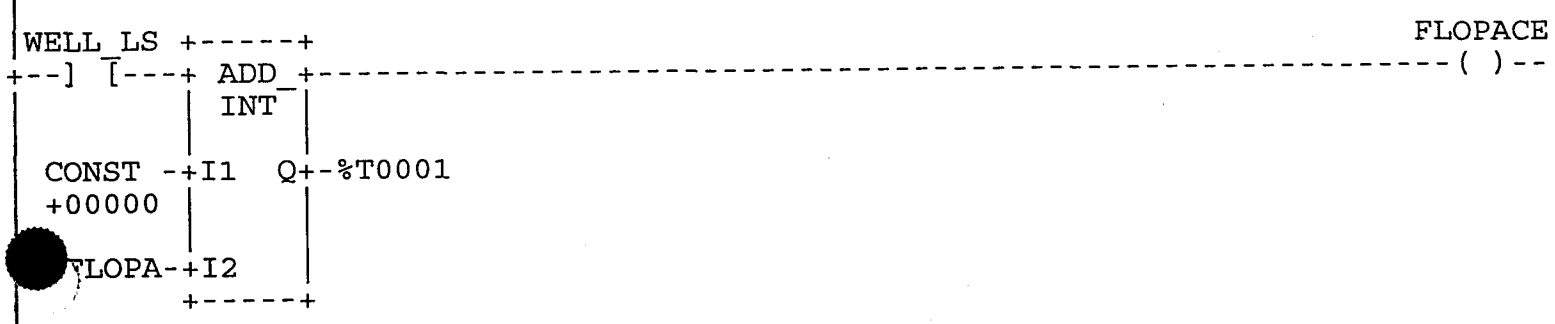

<< RUNG 24 STEP #0073 >>

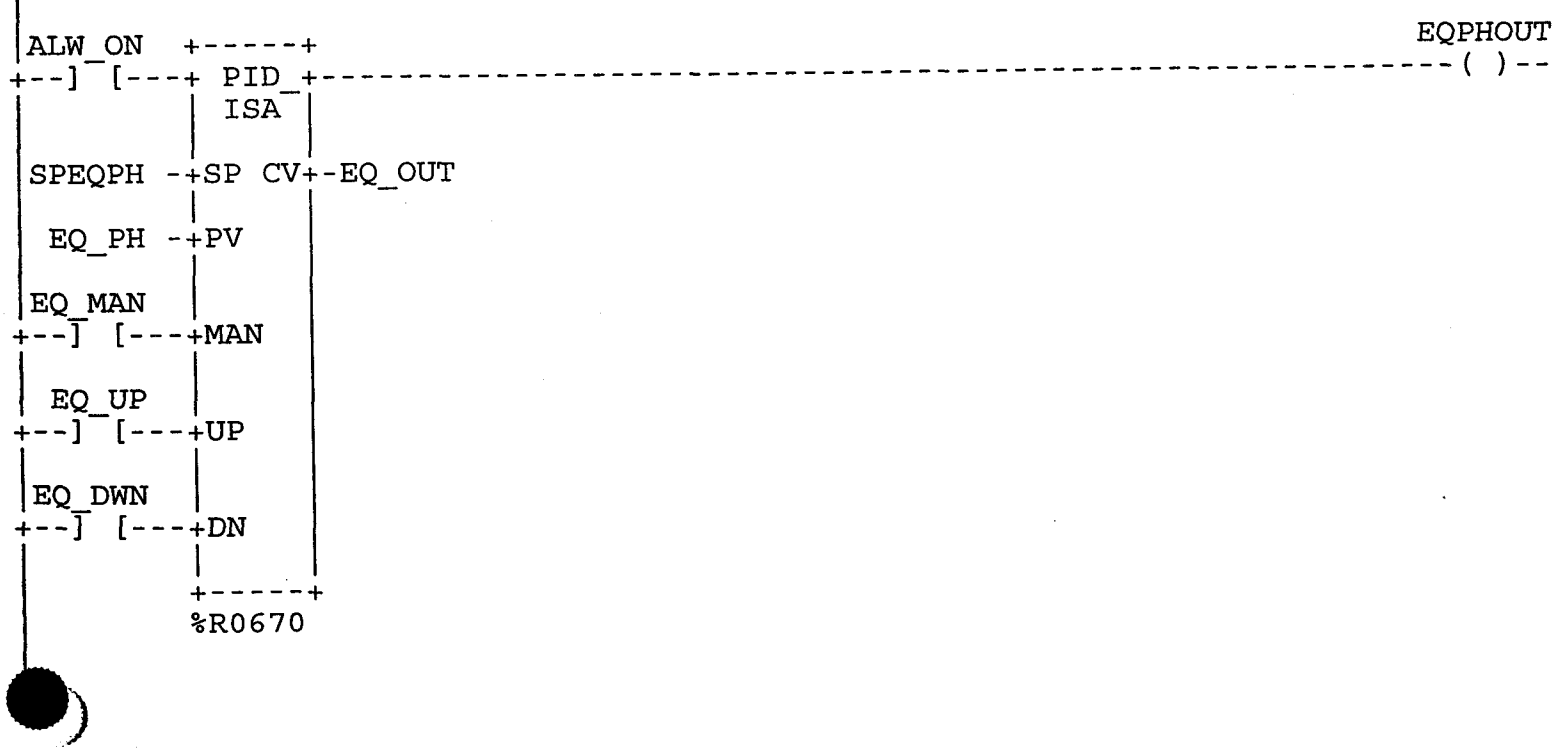

<< RUNG 25 STEP #0079 >>

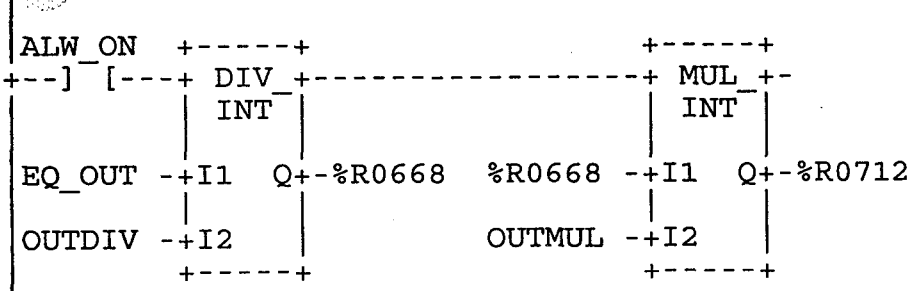

<< RUNG 26 STEP #0082 >>

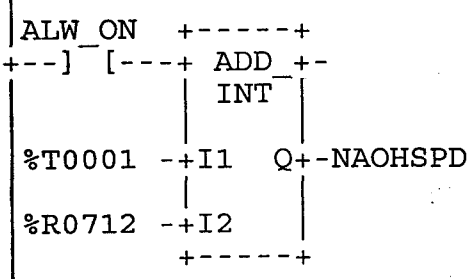

<< RUNG 27 STEP #0084 >>

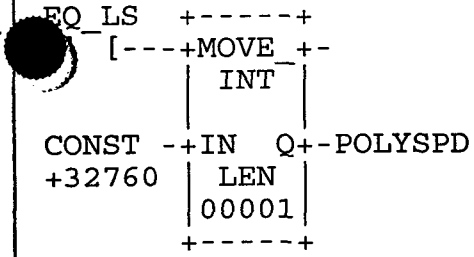

<< RUNG 28 STEP #0086 >>

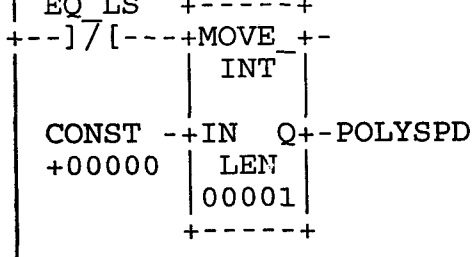

<< RUNG 29 STEP #0088 >>

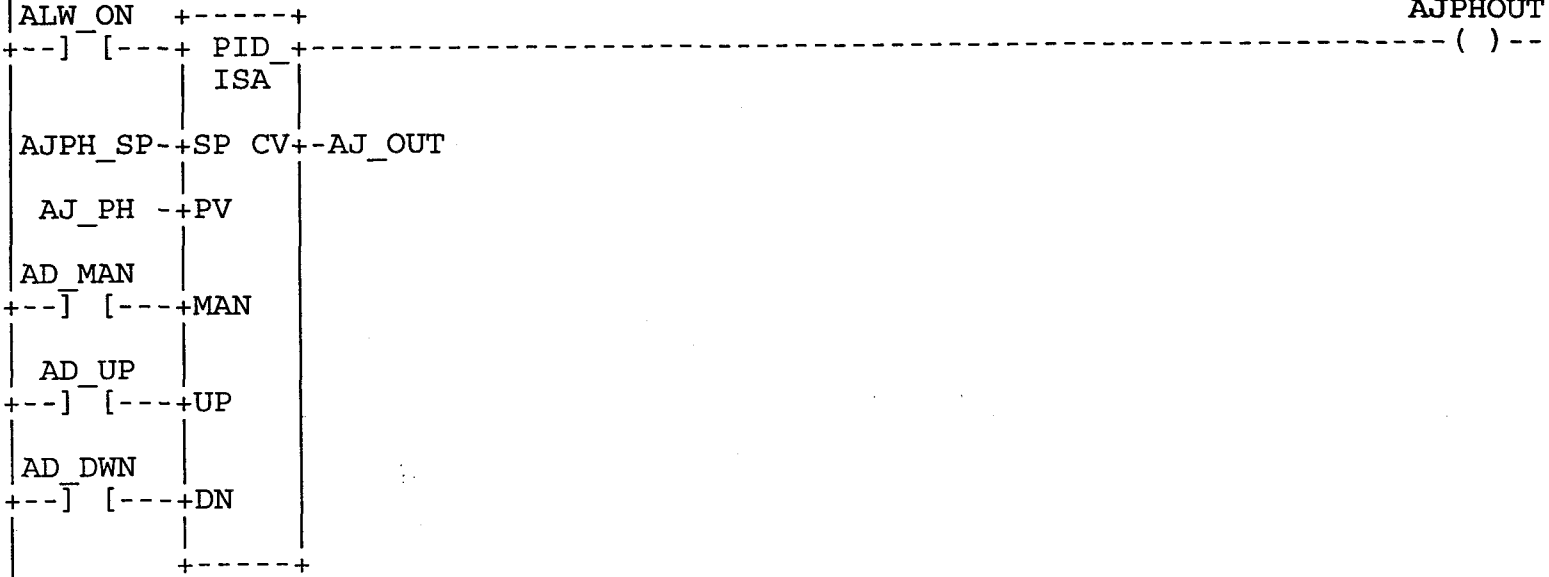

<< RUNG 30 STEP #0094 >>

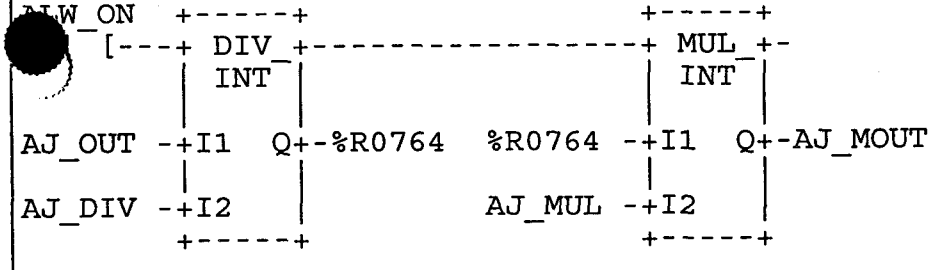

<< RUNG 31 STEP #0097 >>

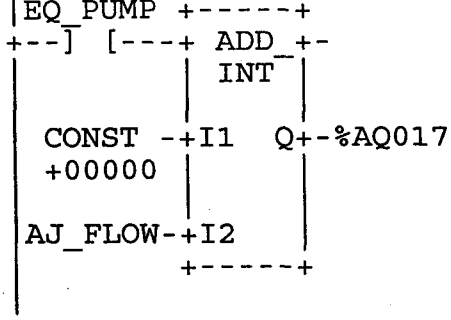

```
<< RUNG 32  STEP #0099 >>

ALW_ON  +------+
+--] [---+ ADD_+-
         | INT |
         |     |
AJ_MOUT-+I1  Q+-ACIDSPD
         |     |
%AQ017 -+I2    |
        +------+

 << RUNG 33  STEP #0101 >>

SUMP_HH                                                          SHUTDWN
+--]/[--+-------------------------------------------------------------( )--
        |
CBN_PDS |
+--]/[--+
        |
SND_PDS |
+--] [--+
        |
BAG_PDS |
+--]/[--+
        |
 Q_HH   |
+  ] [--+
        |
 LO_PH  |
+--] [--+
        |
 HI_PH  |
+--] [--+
        |
 << RUNG 34  STEP #0109 >>                                       %Q163
SHUTDWN                                                          RUNENAB
+--]/[-------------------------------------------------------------( )--
        |
 << RUNG 35  STEP #0111 >>

SHUTDWN                                                          DIALER
+--] [-------------------------------------------------------------( )--
        |
 << RUNG 36  STEP #0113 >>

ALW_ON  +------+                                                 %Q0030
+--] [---+ EQ_ |+-------------------------------------------------( )--
         | INT ||
         |     ||
EC_MIN--+I1  Q++
         |     |
 CONST -+I2    |
 +00000 +------+
```

<< RUNG 37 STEP #0116 >>

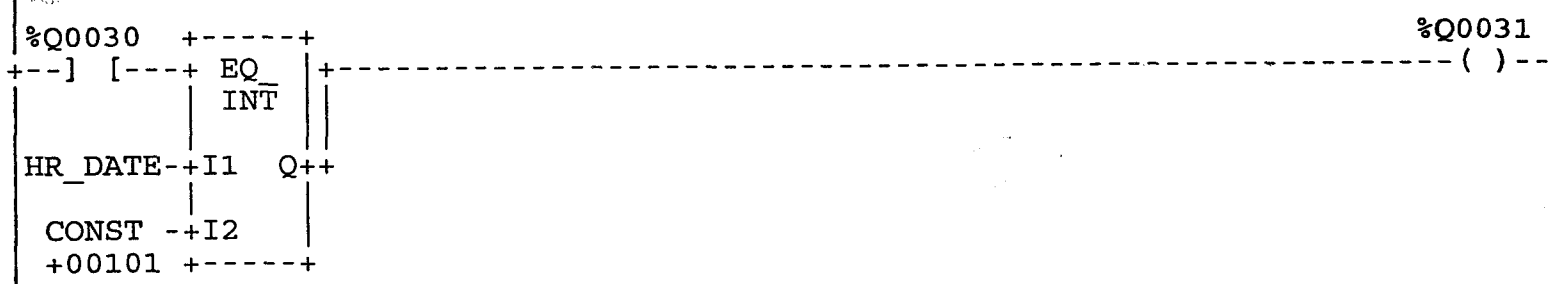

<< RUNG 38 STEP #0119 >>

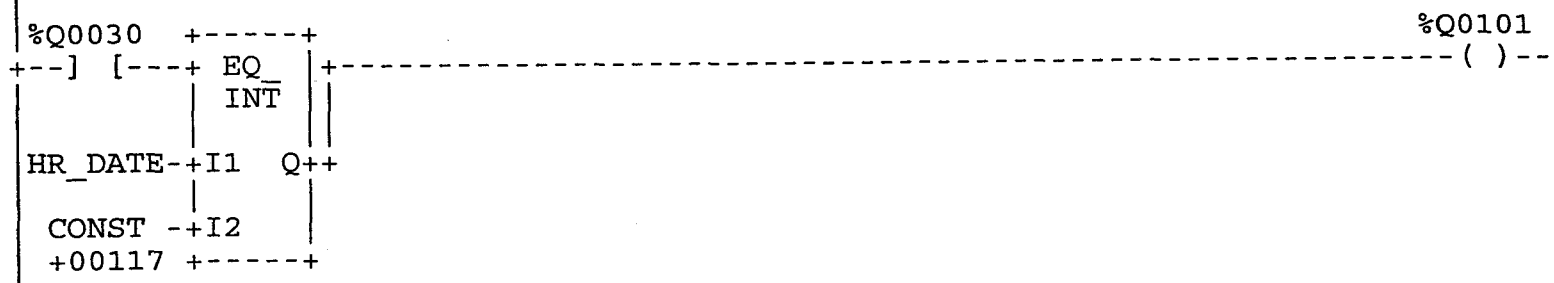

<< RUNG 39 STEP #0122 >>

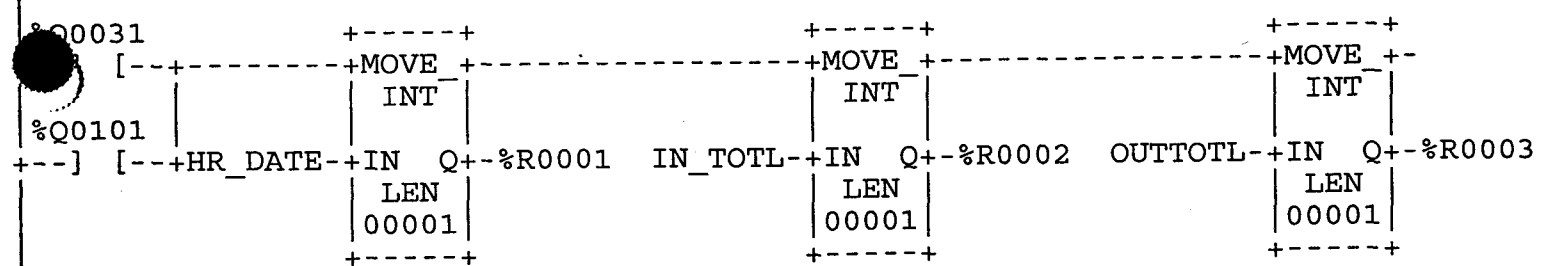

<< RUNG 40 STEP #0127 >>

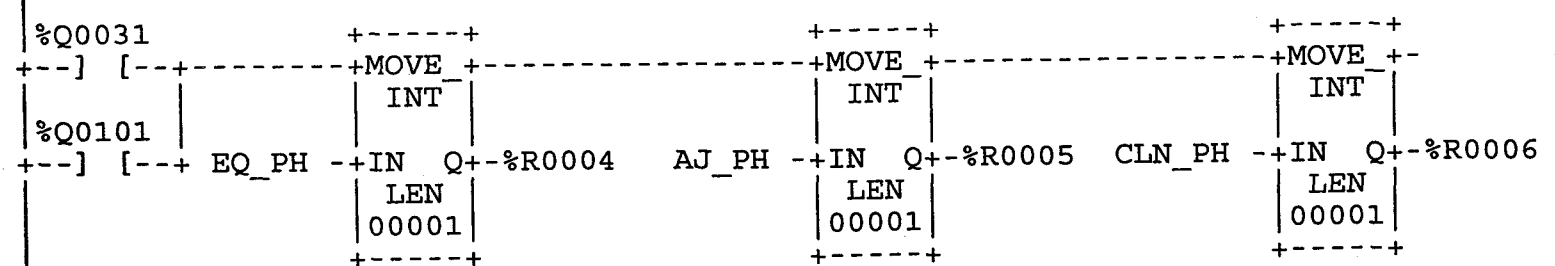

<< RUNG 41 STEP #0132 >>

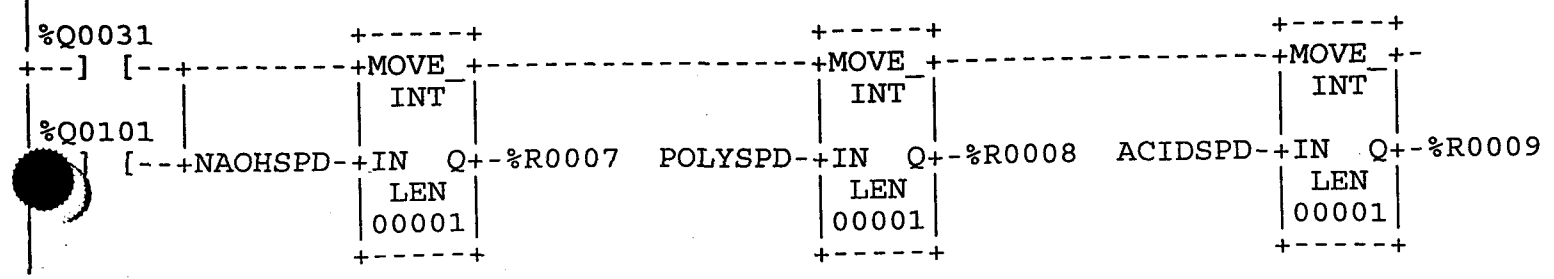

<< RUNG 42 STEP #0137 >>

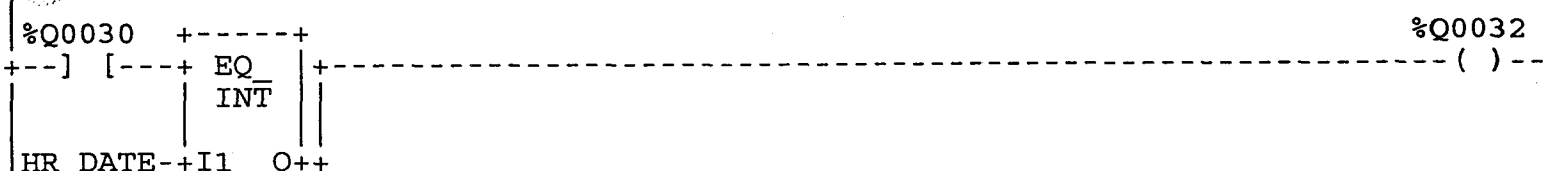

<< RUNG 43 STEP #0140 >>

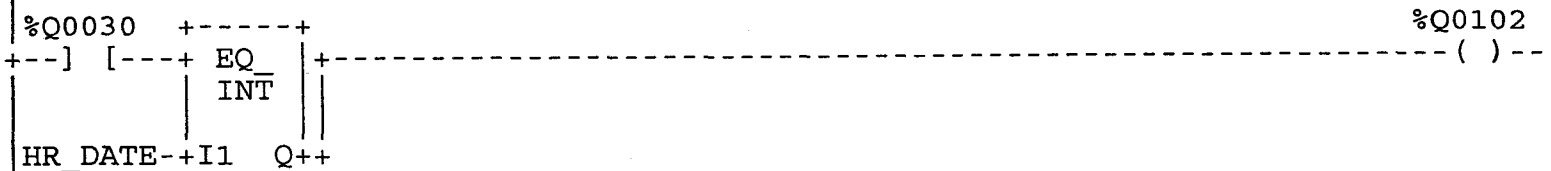

<< RUNG 44 STEP #0143 >>

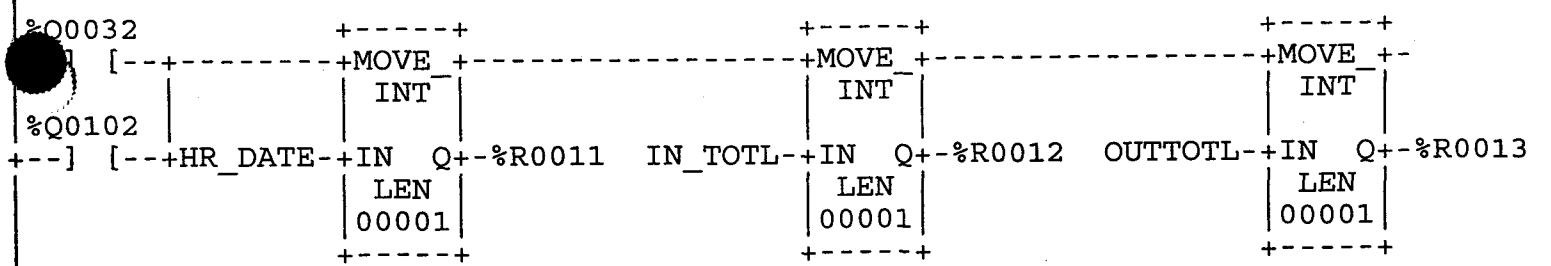

<< RUNG 45 STEP #0148 >>

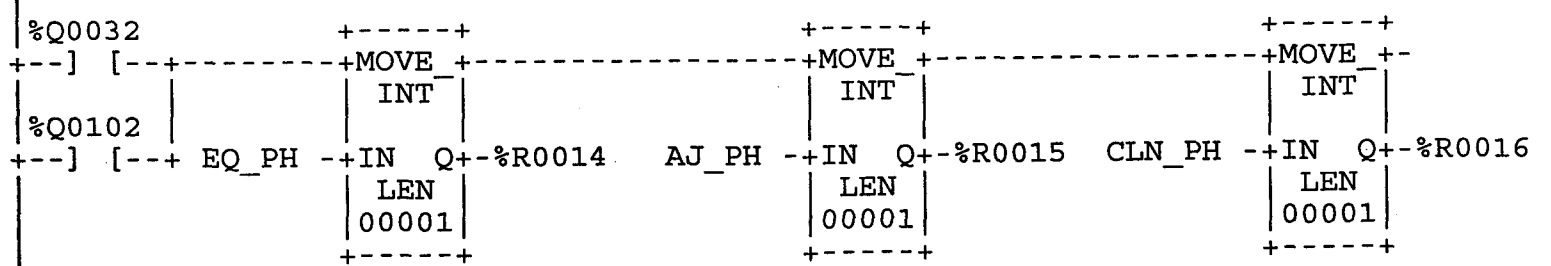

<< RUNG 46 STEP #0153 >>

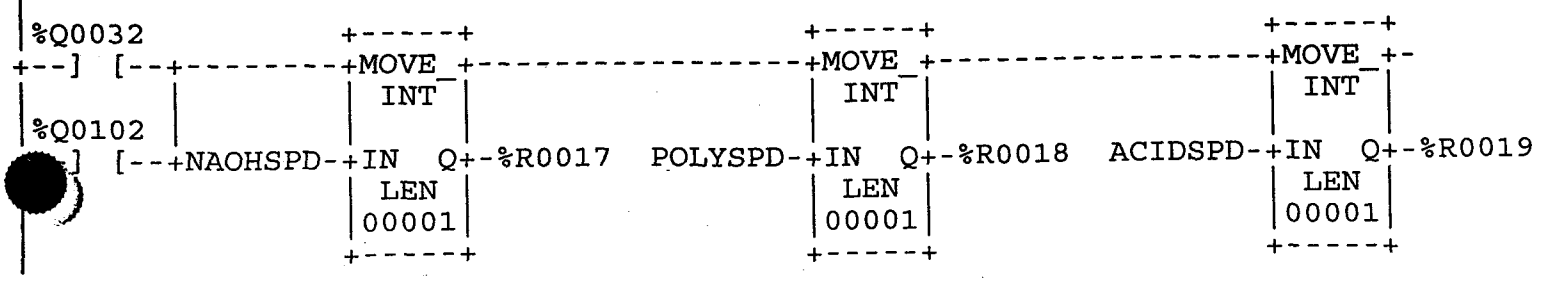

RUNG 47 STEP #0158 >>

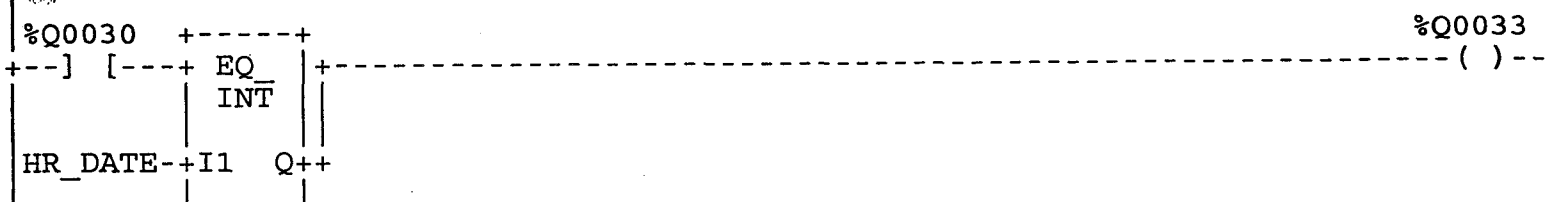

<< RUNG 48 STEP #0161 >>

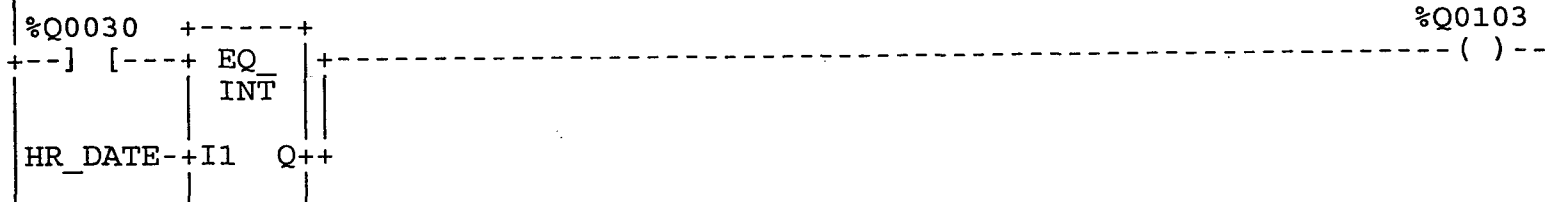

<< RUNG 49 STEP #0164 >>

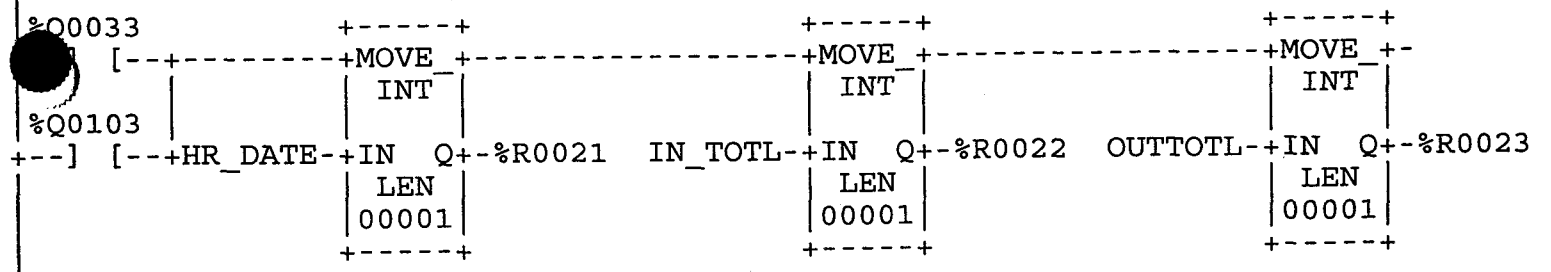

<< RUNG 50 STEP #0169 >>

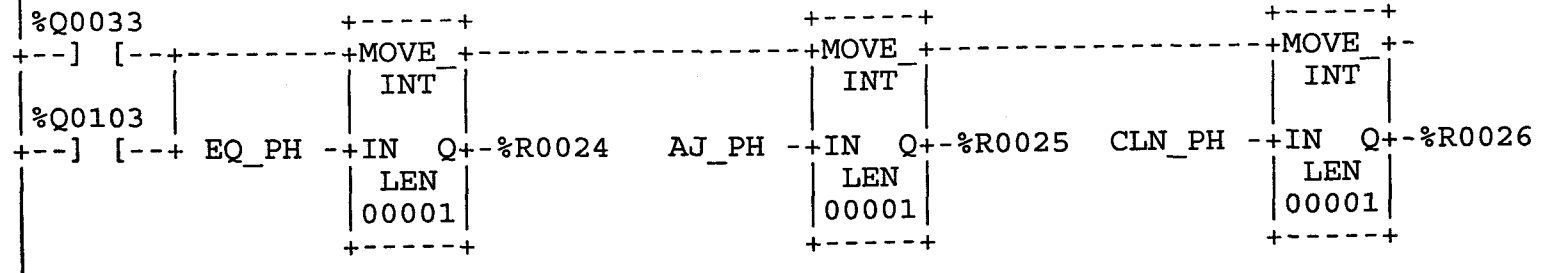

<< RUNG 51 STEP #0174 >>

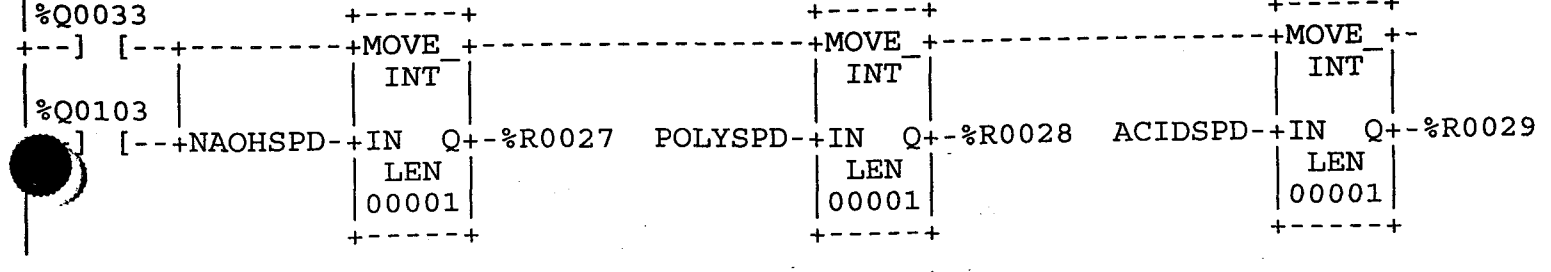

<< RUNG 52 STEP #0179 >>

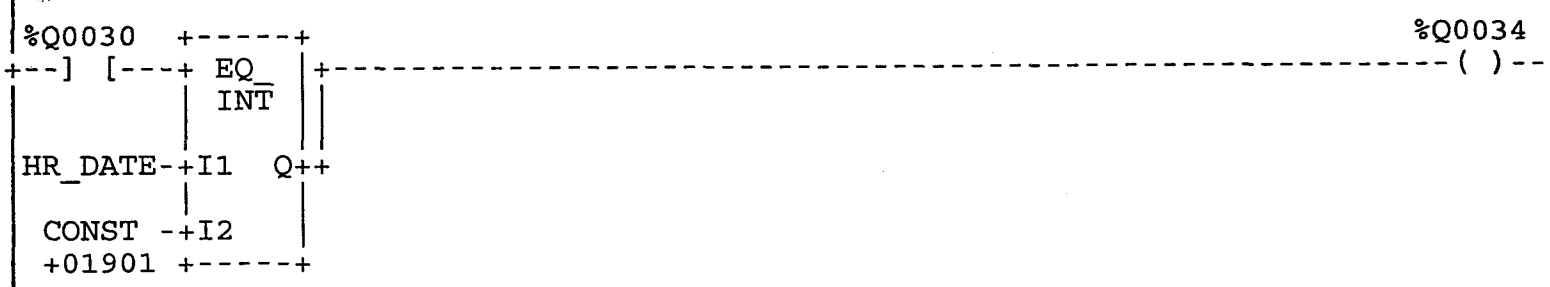

<< RUNG 53 STEP #0182 >>

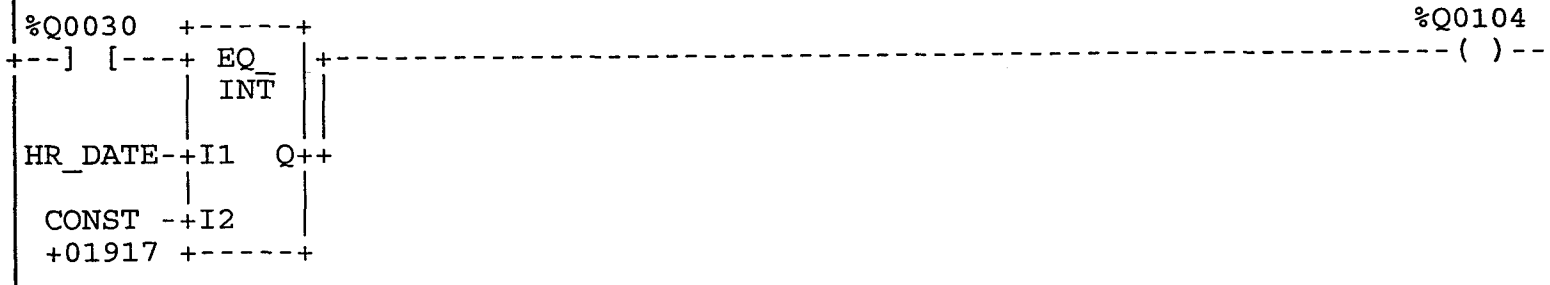

<< RUNG 54 STEP #0185 >>

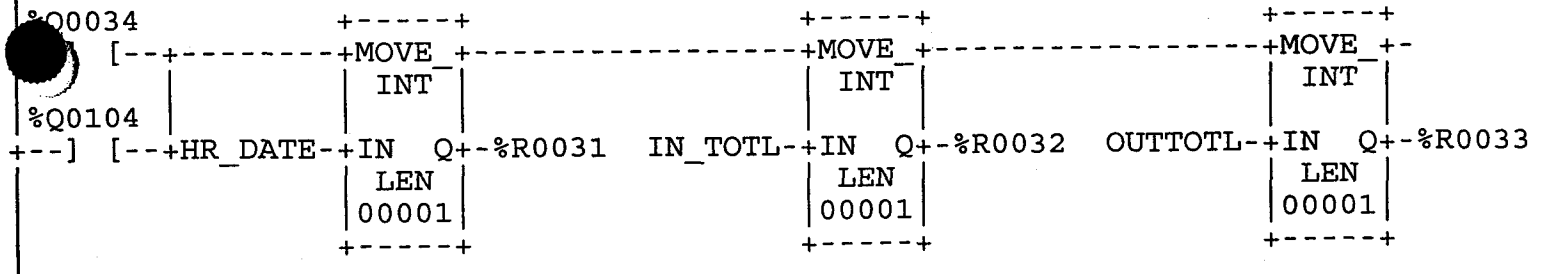

<< RUNG 55 STEP #0190 >>

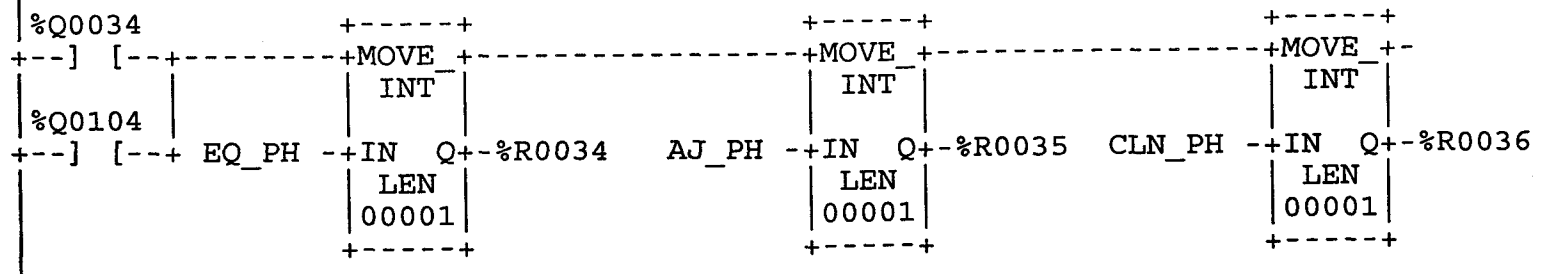

<< RUNG 56 STEP #0195 >>

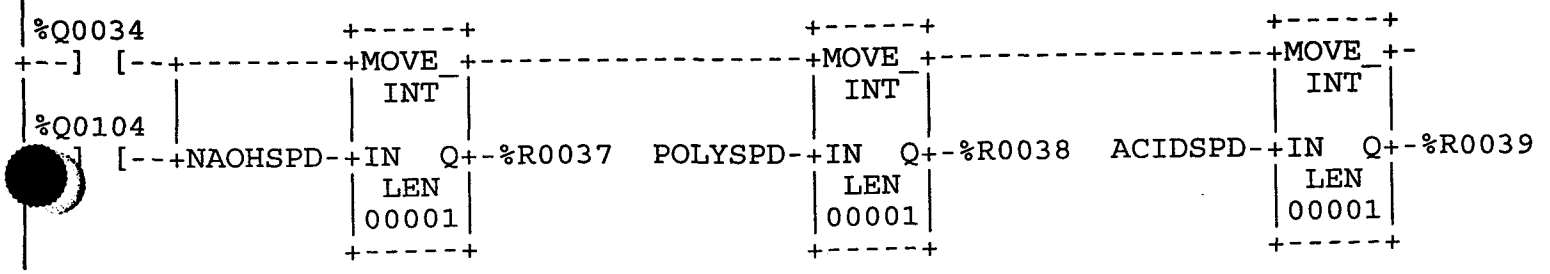

<< RUNG 57 STEP #0200 >>

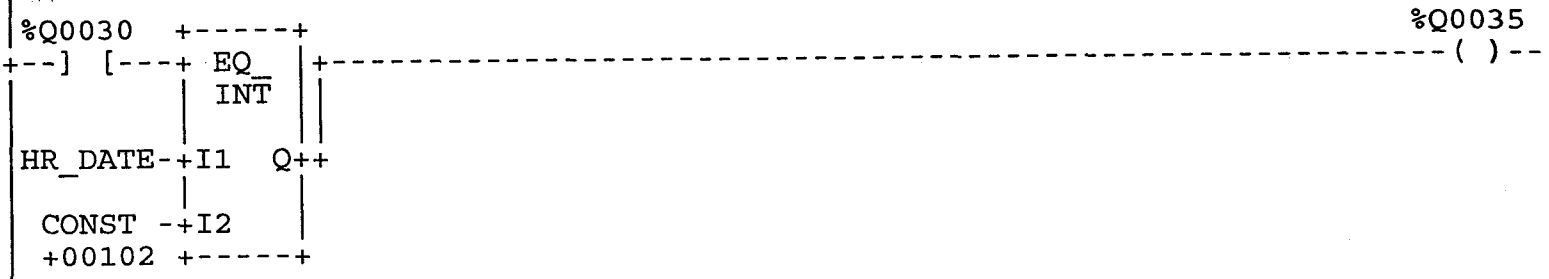

<< RUNG 58 STEP #0203 >>

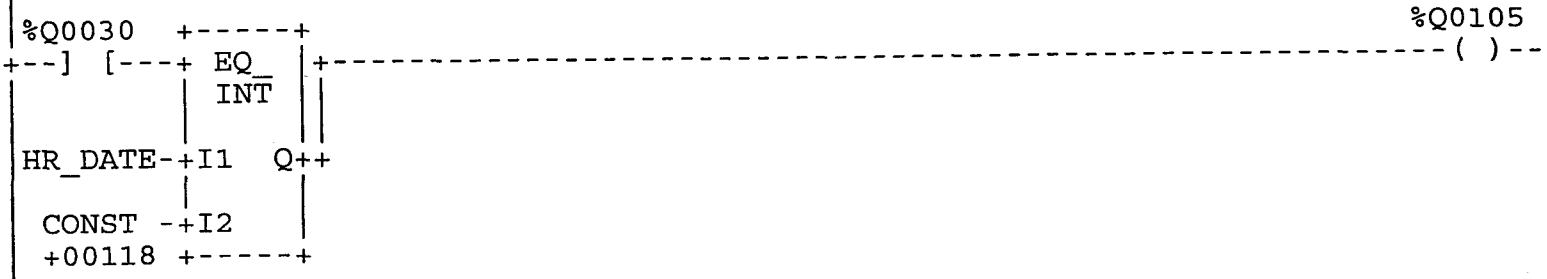

<< RUNG 59 STEP #0206 >>

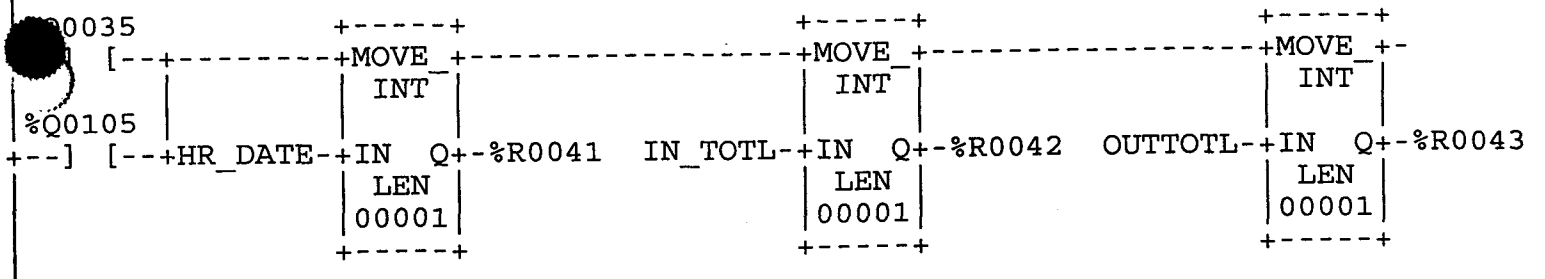

<< RUNG 60 STEP #0211 >>

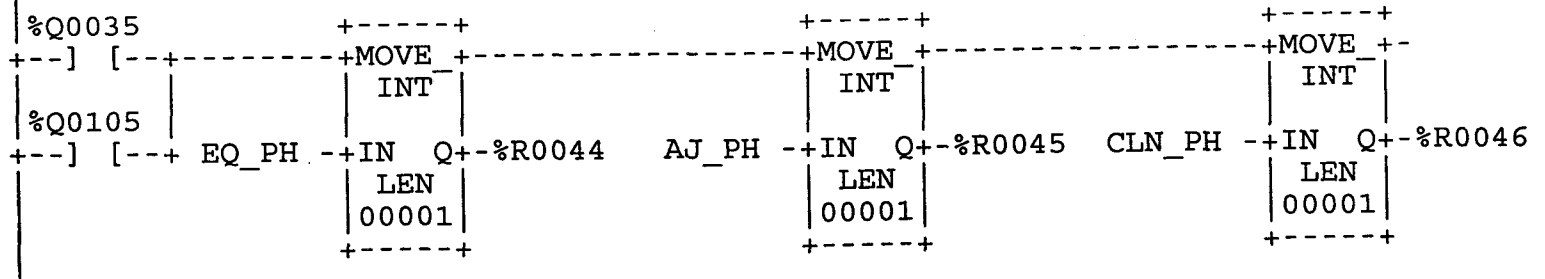

<< RUNG 61 STEP #0216 >>

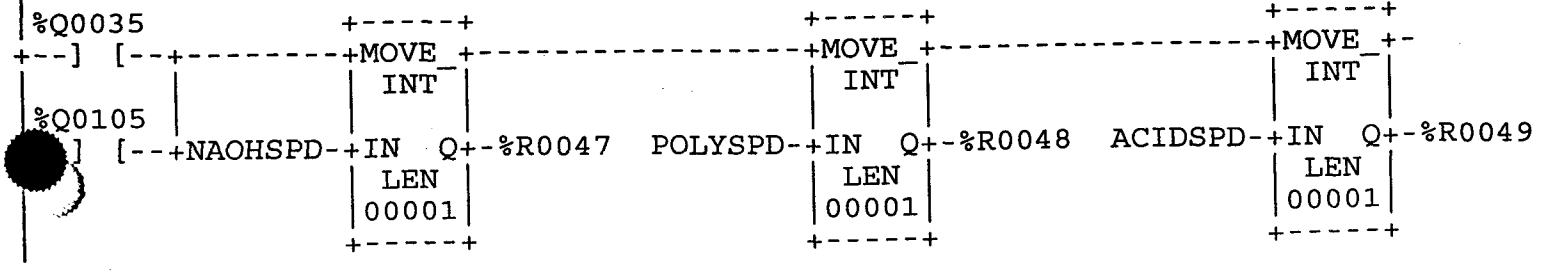

<< RUNG 62 STEP #0221 >>

<< RUNG 63 STEP #0224 >>

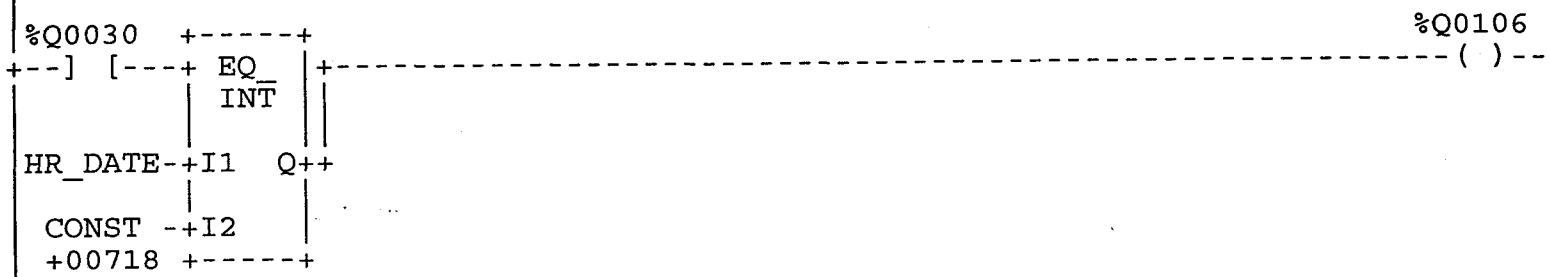

<< RUNG 64 STEP #0227 >>

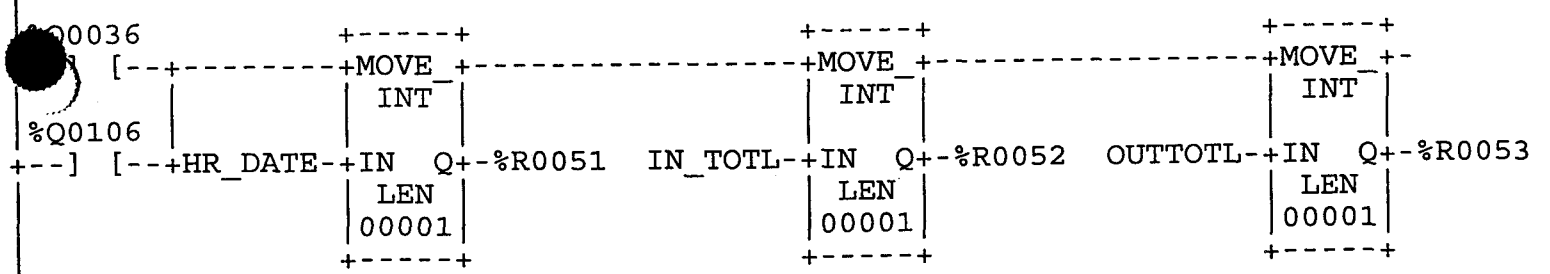

<< RUNG 65 STEP #0232 >>

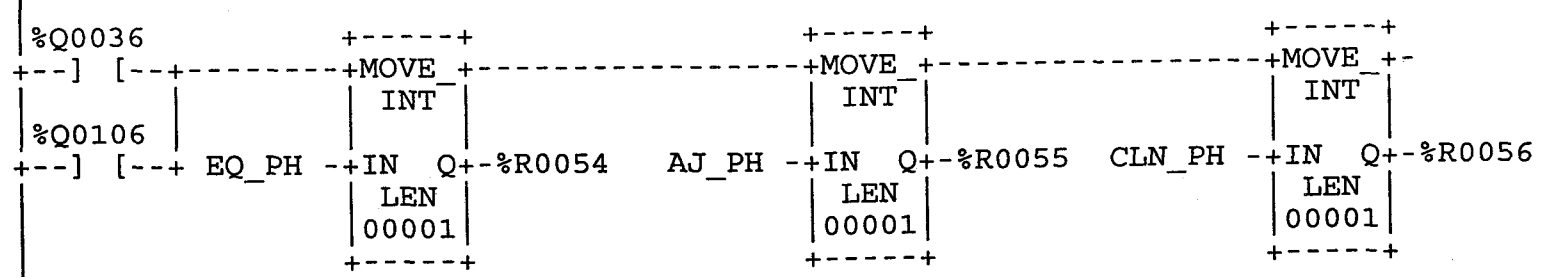

<< RUNG 66 STEP #0237 >>

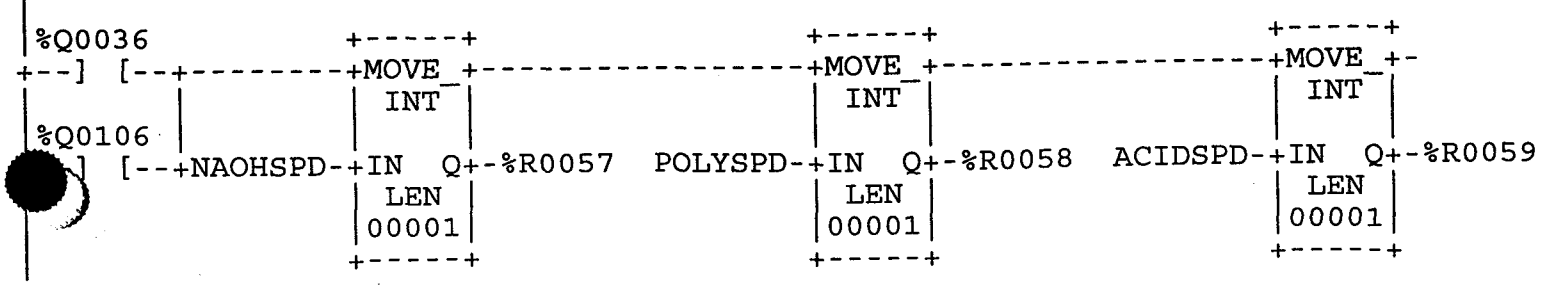

<< RUNG 67 STEP #0242 >>

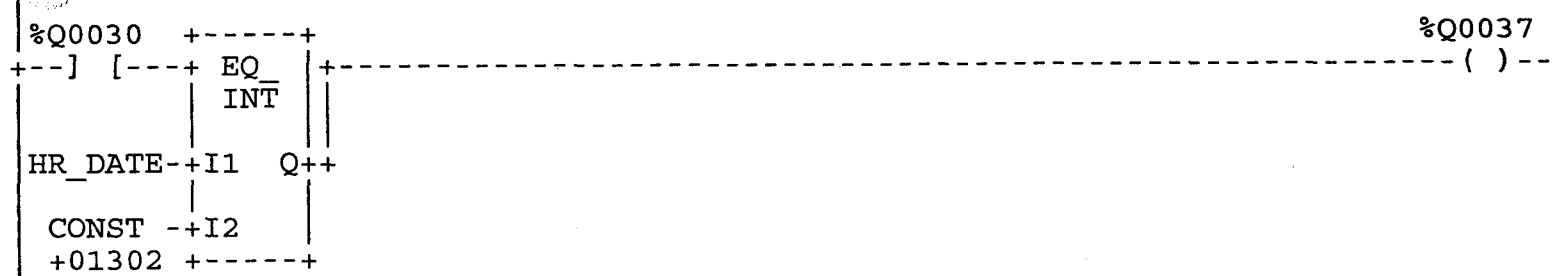

<< RUNG 68 STEP #0245 >>

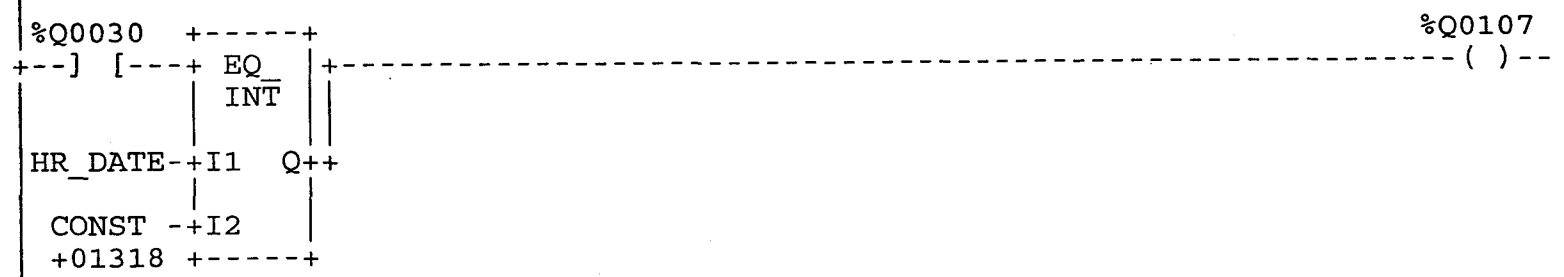

<< RUNG 69 STEP #0248 >>

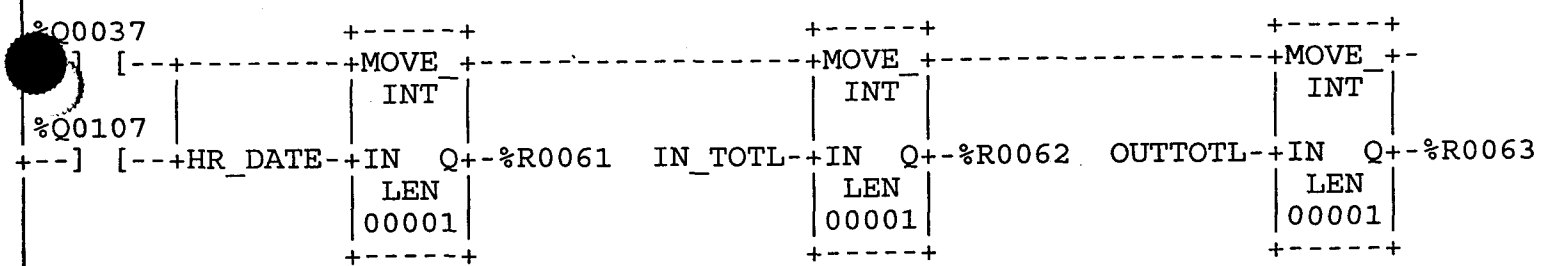

<< RUNG 70 STEP #0253 >>

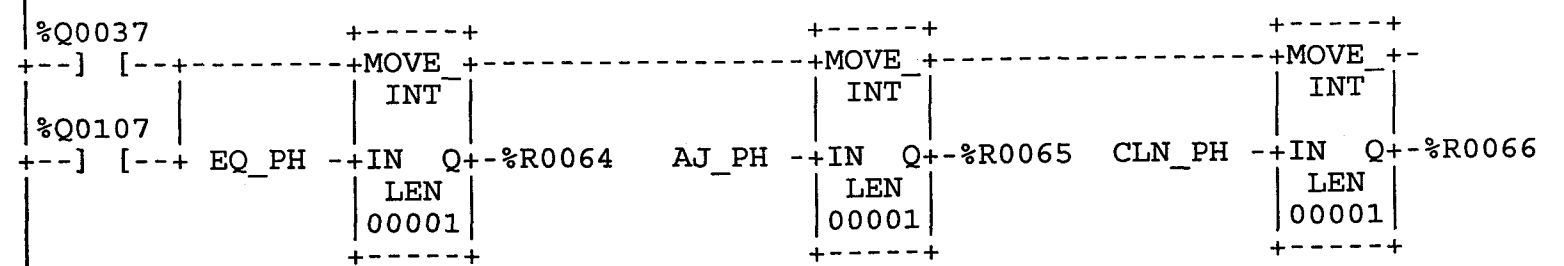

<< RUNG 71 STEP #0258 >>

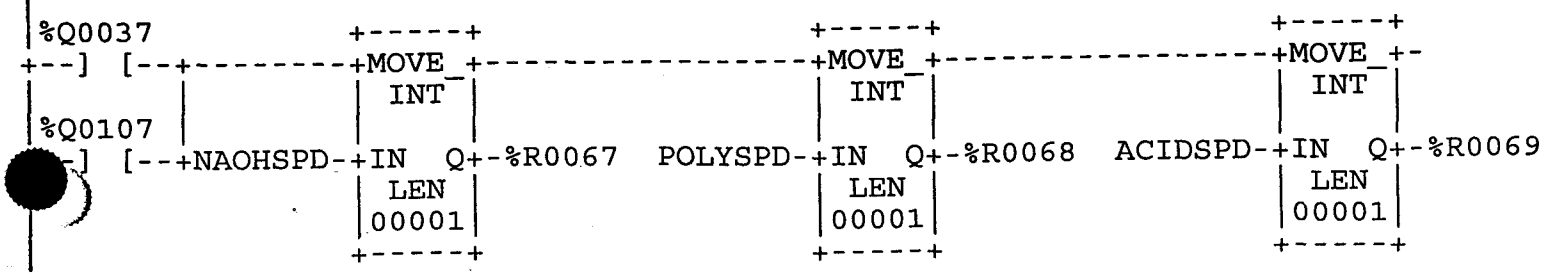

<< RUNG 72 STEP #0263 >>

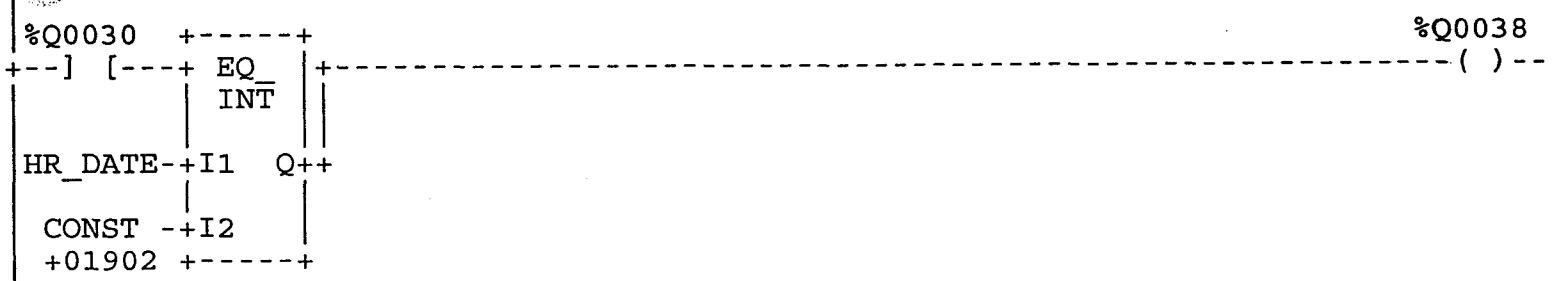

<< RUNG 73 STEP #0266 >>

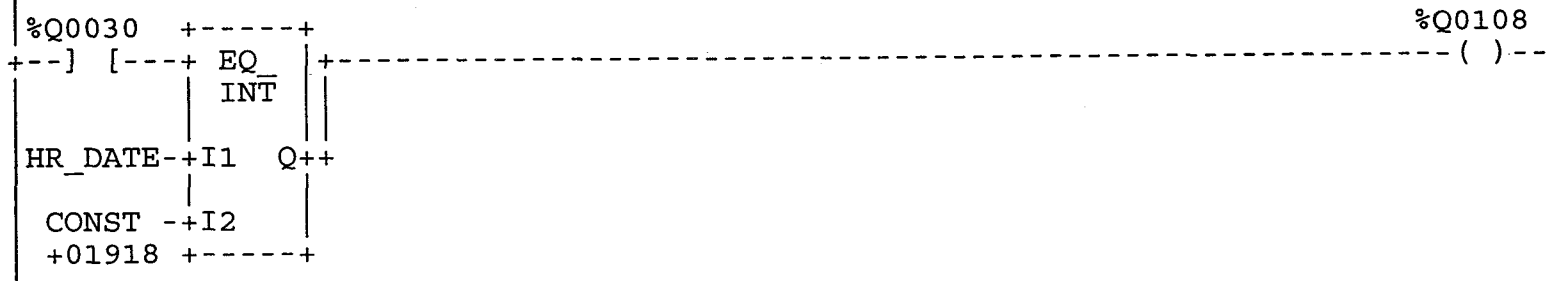

<< RUNG 74 STEP #0269 >>

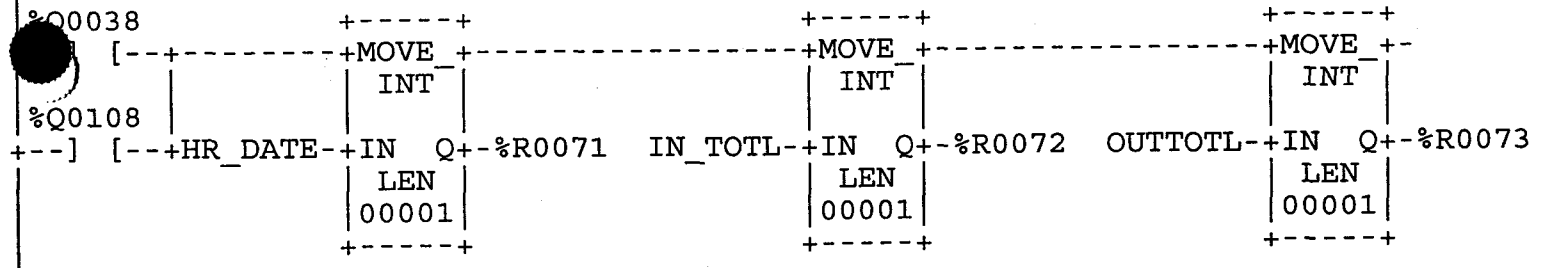

<< RUNG 75 STEP #0274 >>

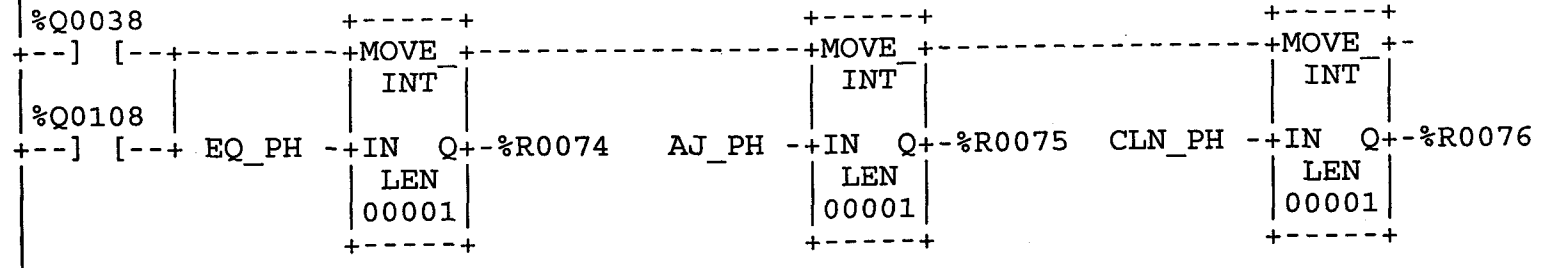

<< RUNG 76 STEP #0279 >>

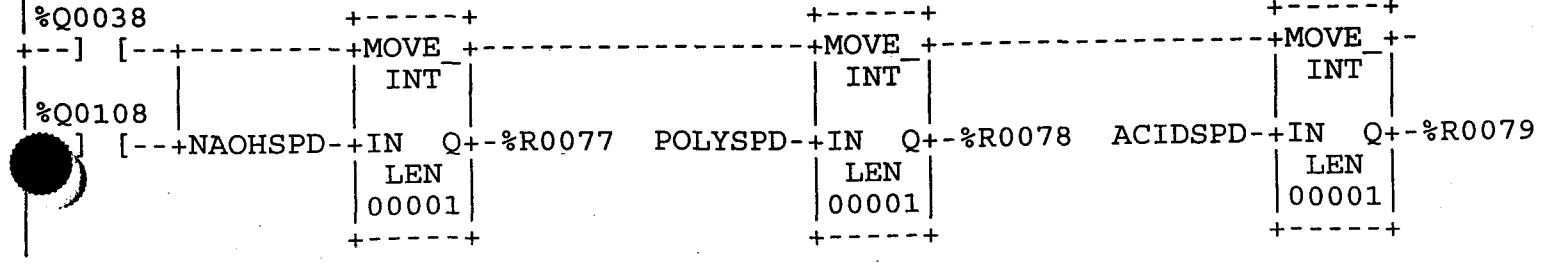

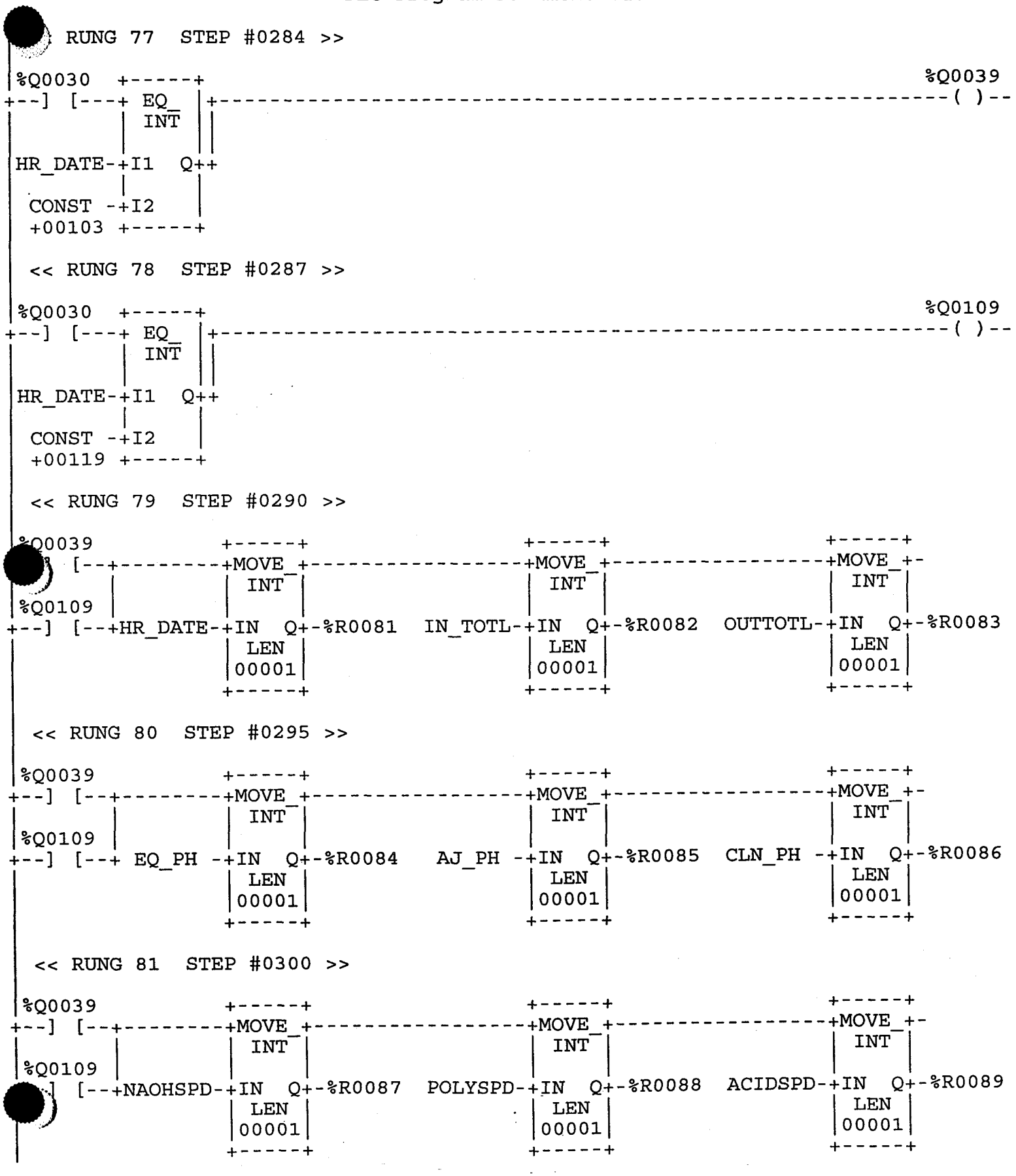
RUNG 77 STEP #0284 >>
%Q0030
EQ_ INT
HR_DATE
I1
I2
CONST +00103
%Q0039
<< RUNG 78 STEP #0287 >>
%Q0030
EQ_ INT
HR_DATE
I1
I2
CONST +00119
%Q0109
<< RUNG 79 STEP #0290 >>
%Q0039
%Q0109
MOVE_ INT
HR_DATE
IN
LEN 00001
%R0081
IN_TOTL
%R0082
OUTTOTL
%R0083
<< RUNG 80 STEP #0295 >>
%Q0039
%Q0109
EQ_PH
%R0084
AJ_PH
%R0085
CLN_PH
%R0086
<< RUNG 81 STEP #0300 >>
%Q0039
%Q0109
NAOHSPD
%R0087
POLYSPD
%R0088
ACIDSPD
%R0089

<< RUNG 82 STEP #0305 >>

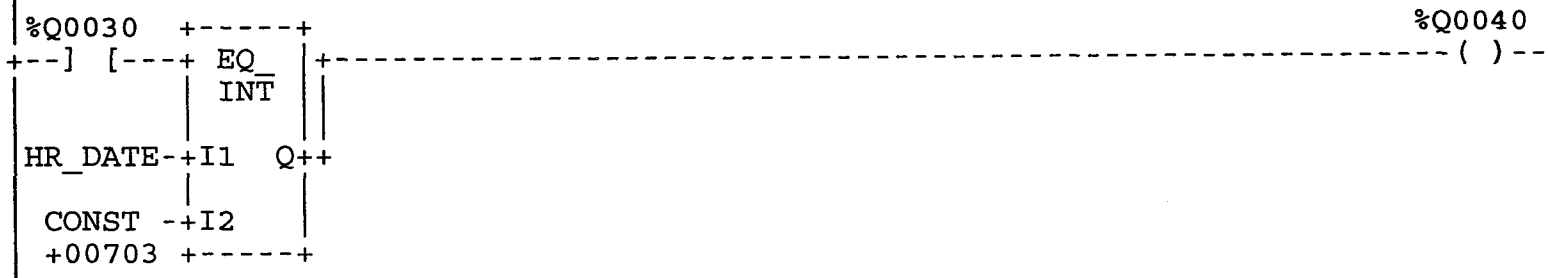

<< RUNG 83 STEP #0308 >>

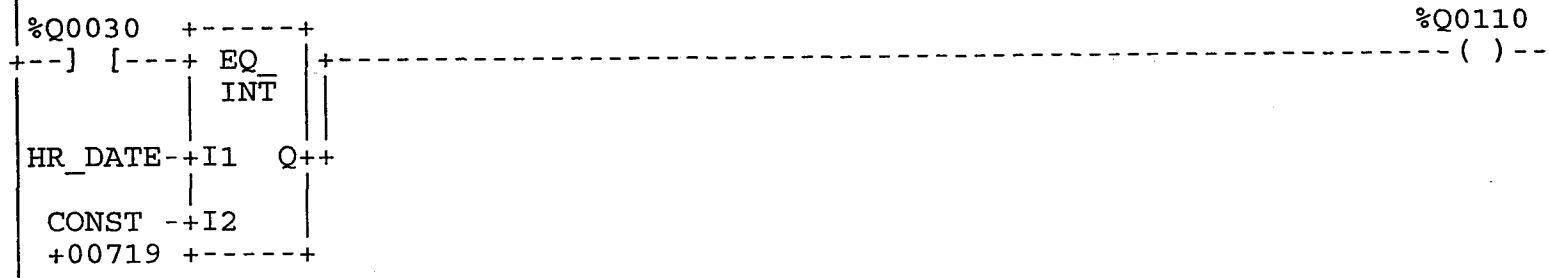

<< RUNG 84 STEP #0311 >>

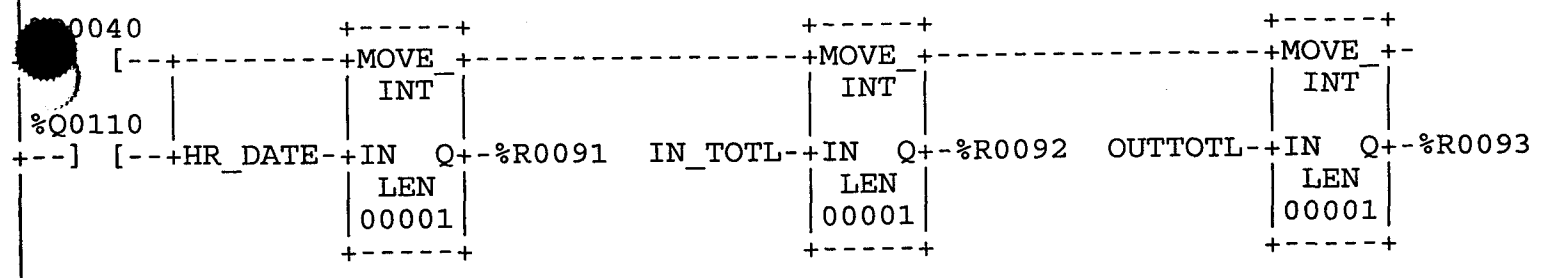

<< RUNG 85 STEP #0316 >>

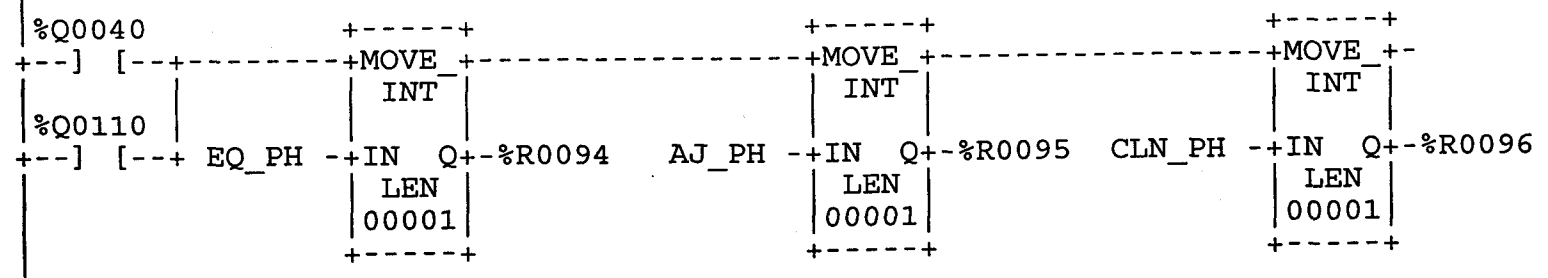

<< RUNG 86 STEP #0321 >>

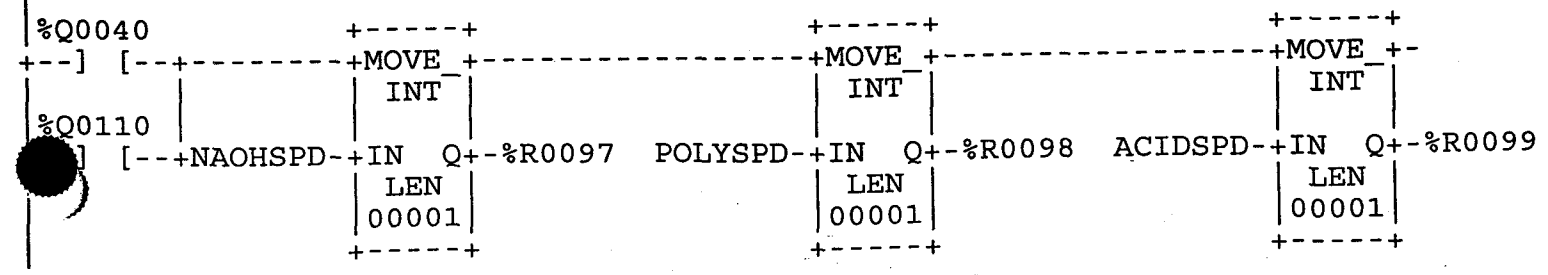

<< RUNG 87 STEP #0326 >>

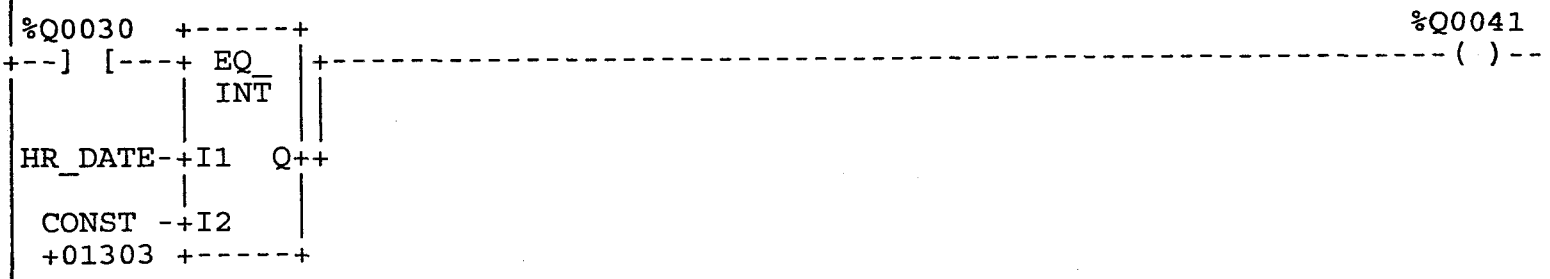

<< RUNG 88 STEP #0329 >>

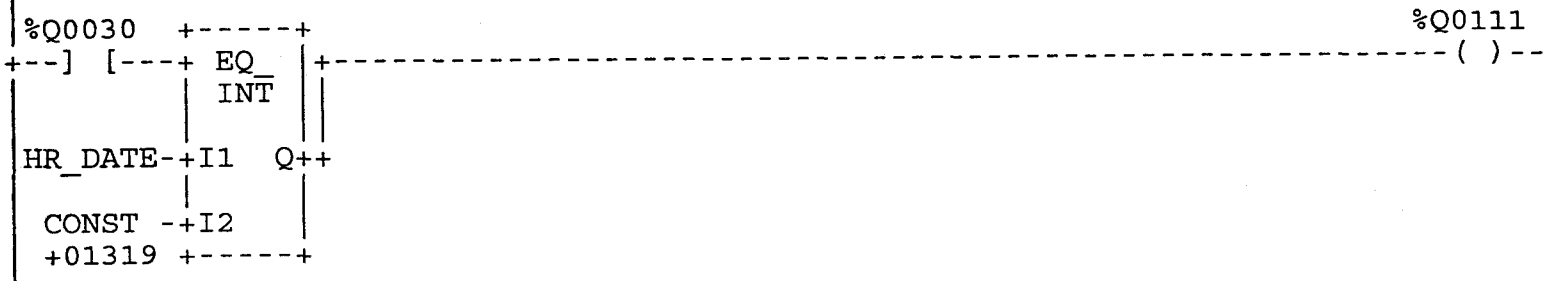

<< RUNG 89 STEP #0332 >>

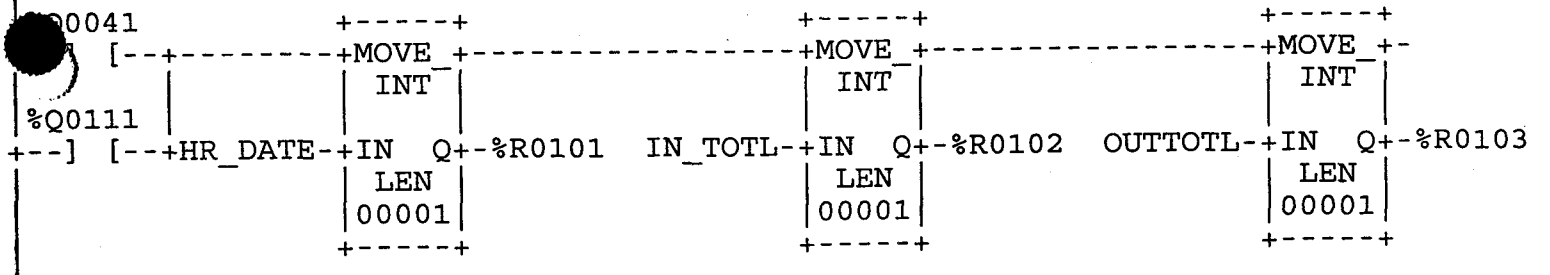

<< RUNG 90 STEP #0337 >>

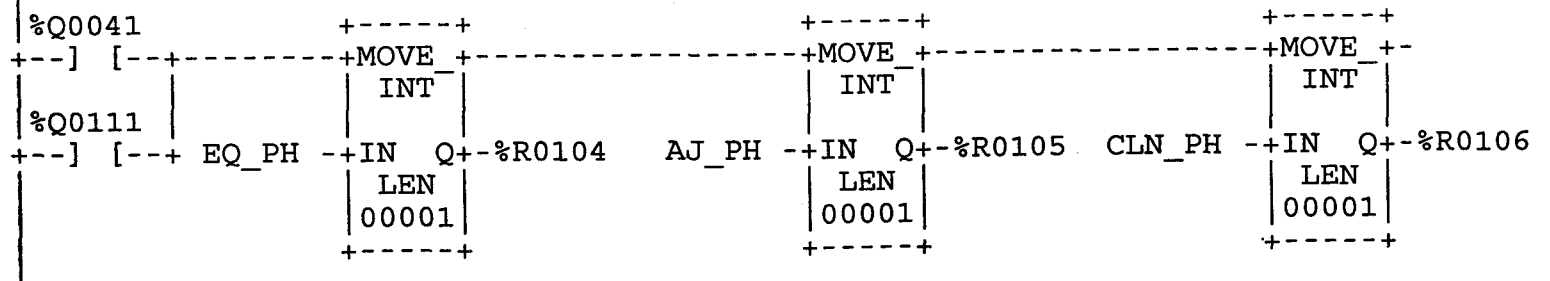

<< RUNG 91 STEP #0342 >>

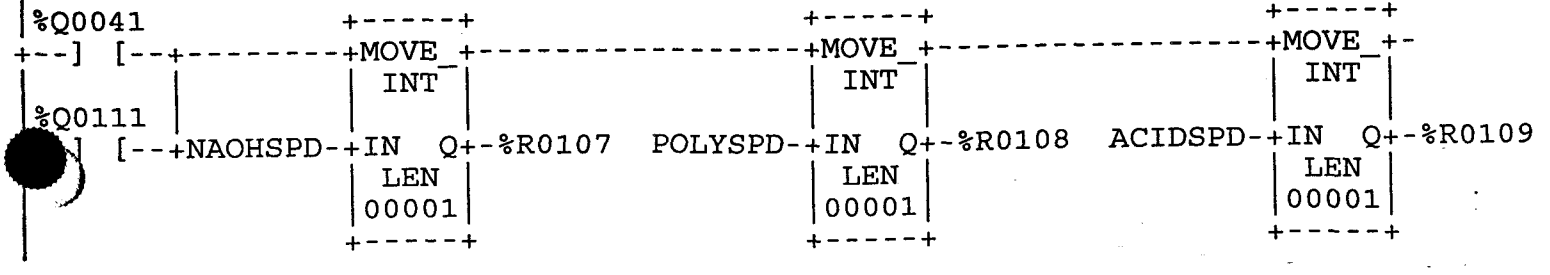

<< RUNG 92 STEP #0347 >>

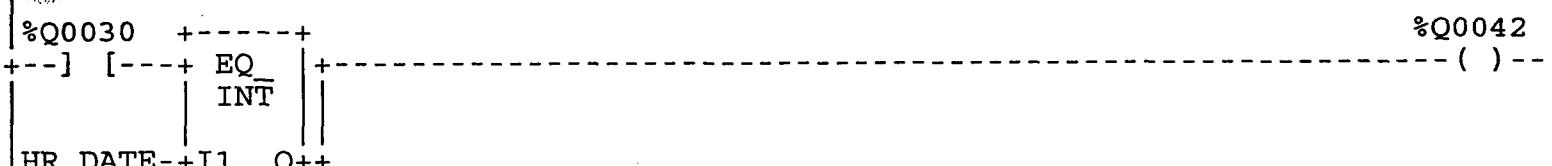

<< RUNG 93 STEP #0350 >>

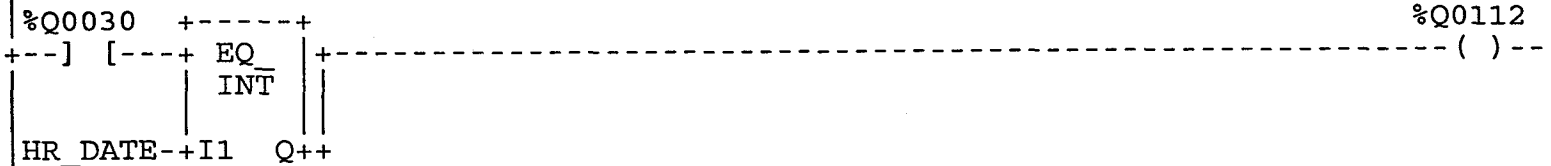

<< RUNG 94 STEP #0353 >>

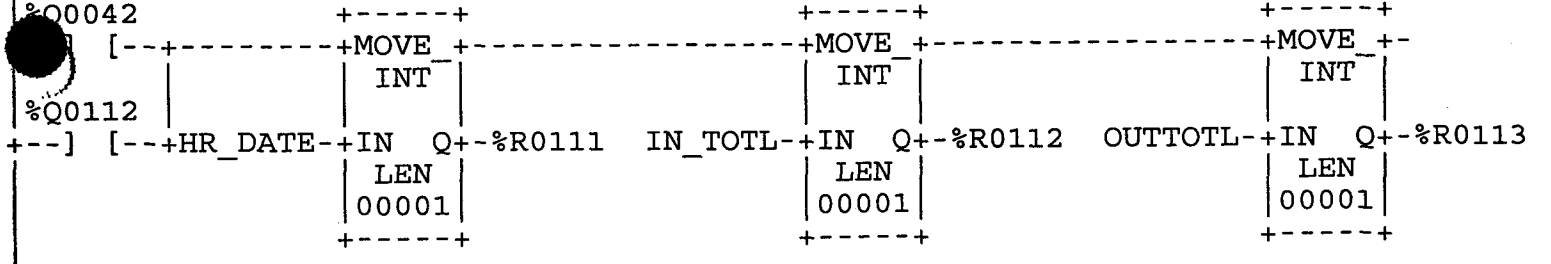

<< RUNG 95 STEP #0358 >>

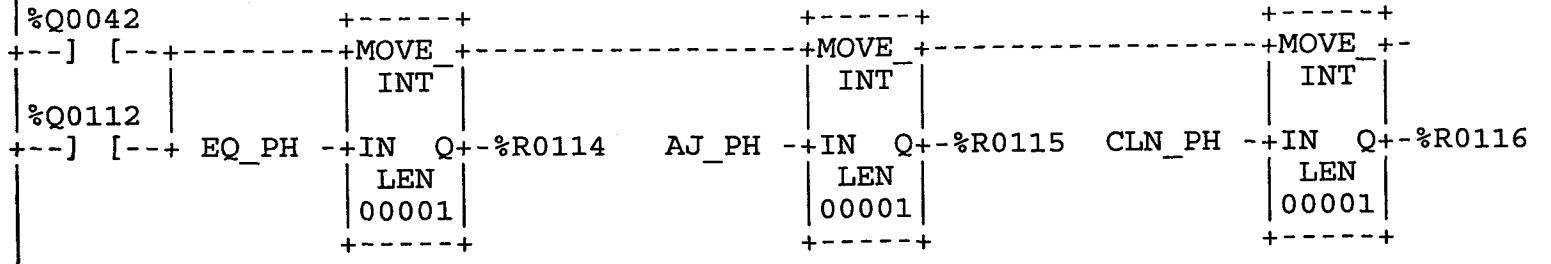

<< RUNG 96 STEP #0363 >>

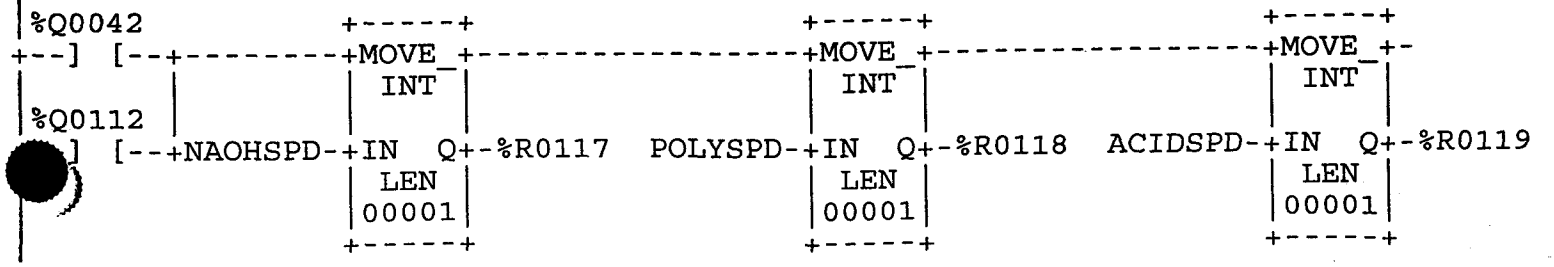

<< RUNG 97 STEP #0368 >>

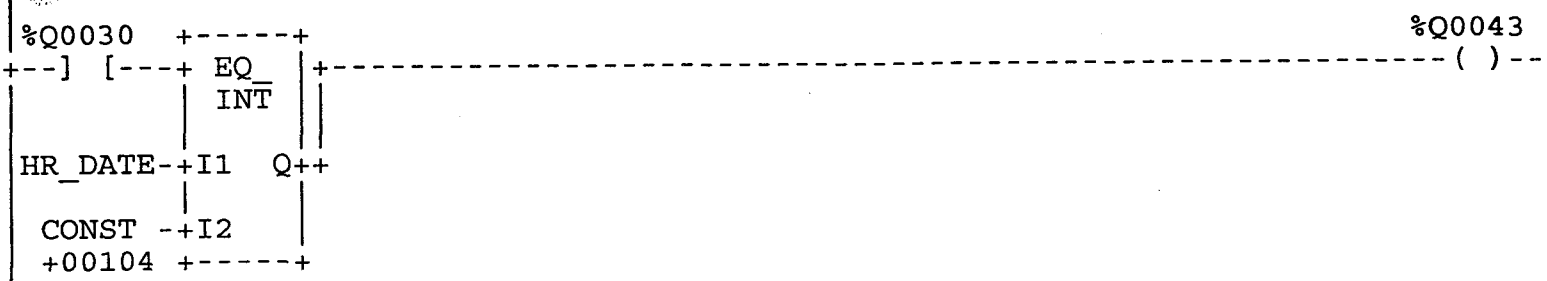

<< RUNG 98 STEP #0371 >>

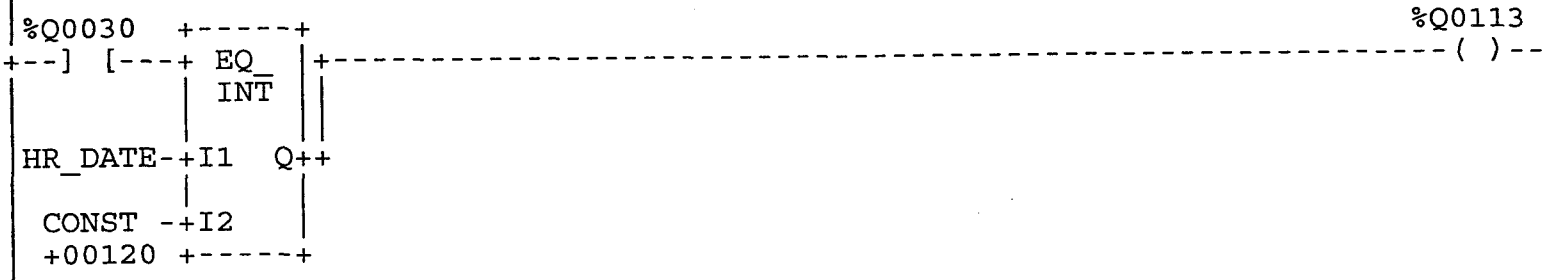

<< RUNG 99 STEP #0374 >>

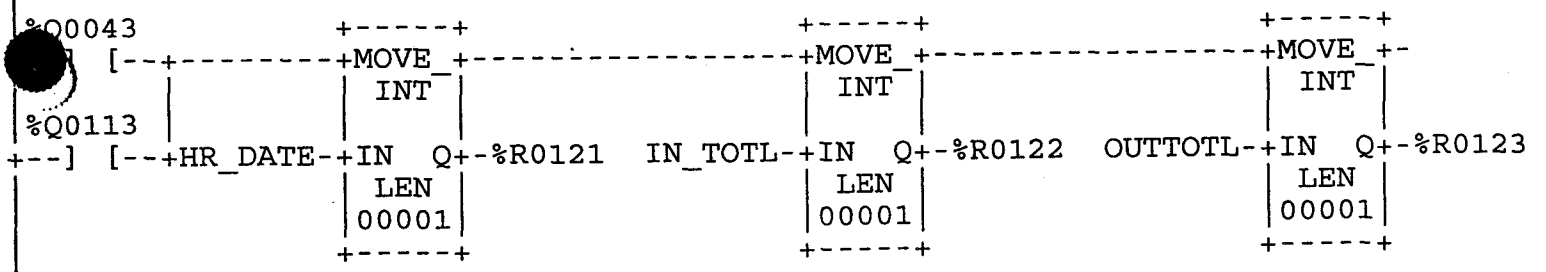

<< RUNG 100 STEP #0379 >>

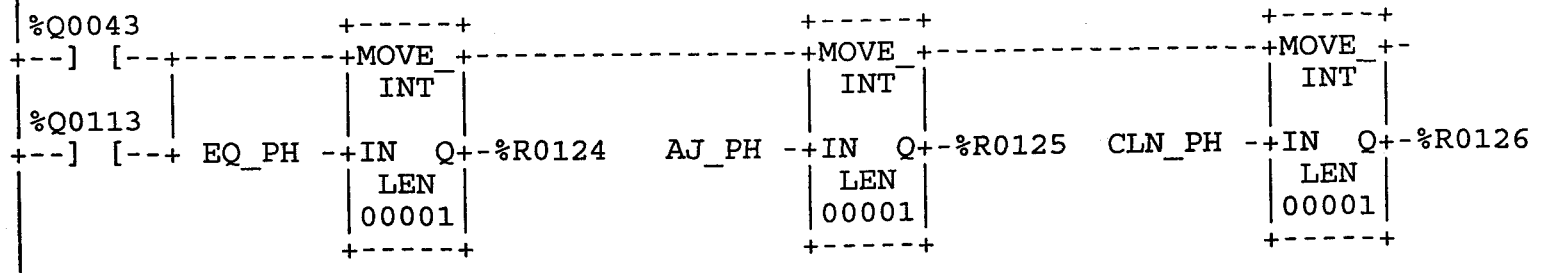

<< RUNG 101 STEP #0384 >>

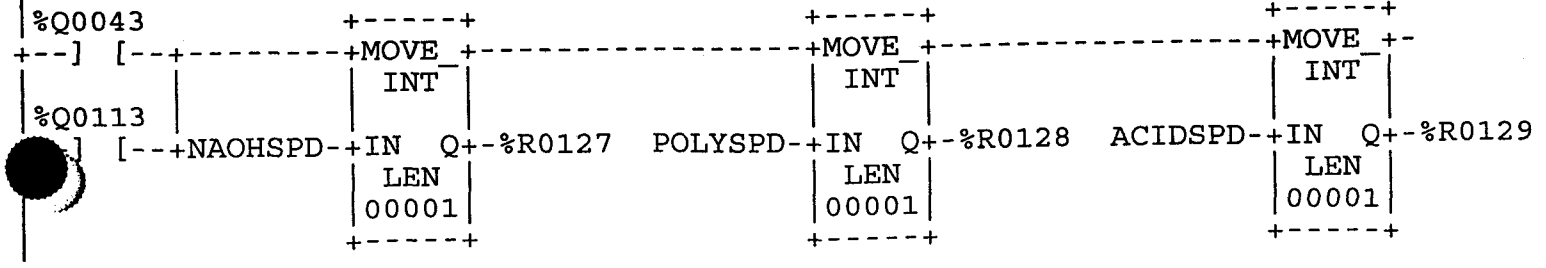

<< RUNG 102 STEP #0389 >>

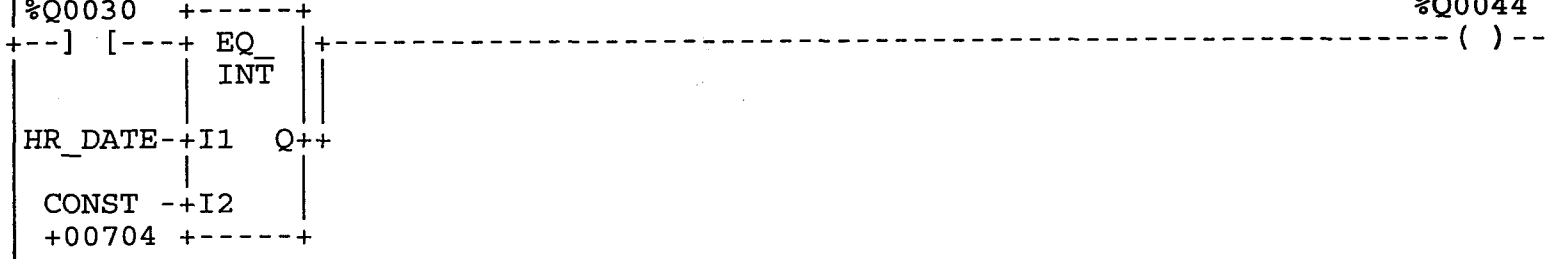

<< RUNG 103 STEP #0392 >>

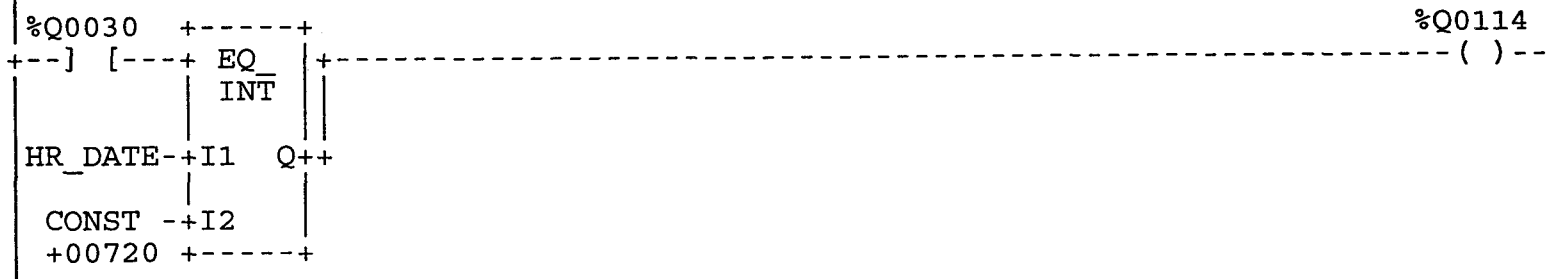

<< RUNG 104 STEP #0395 >>

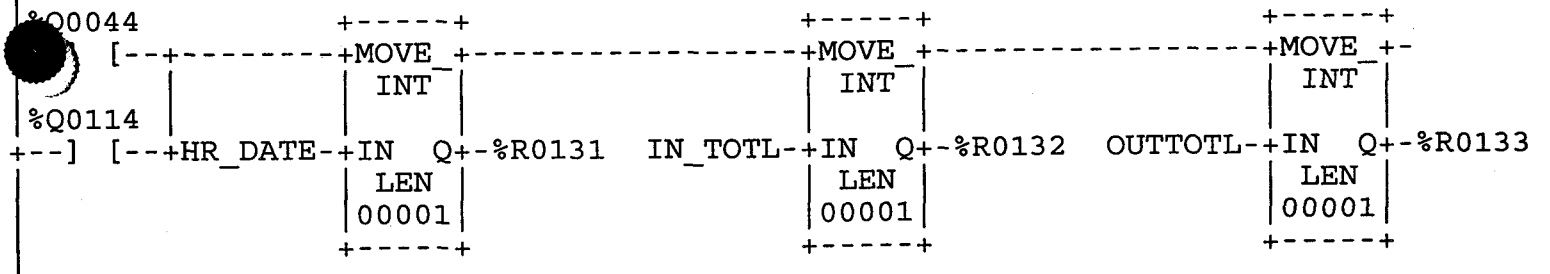

<< RUNG 105 STEP #0400 >>

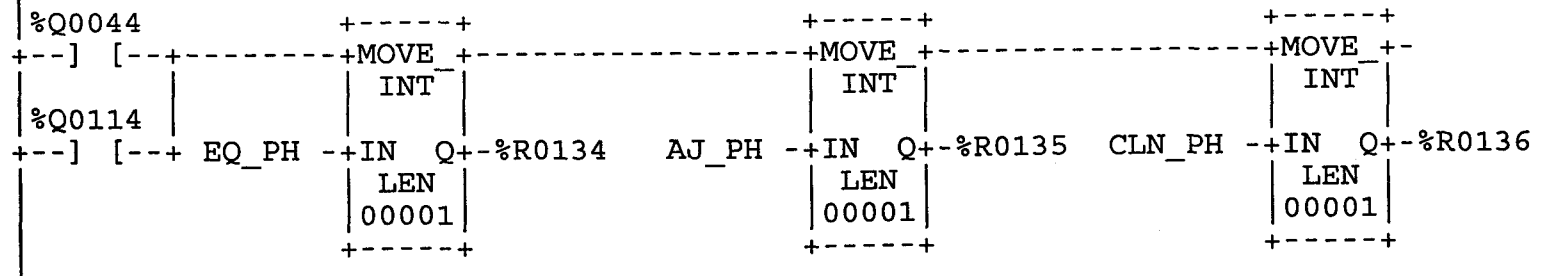

<< RUNG 106 STEP #0405 >>

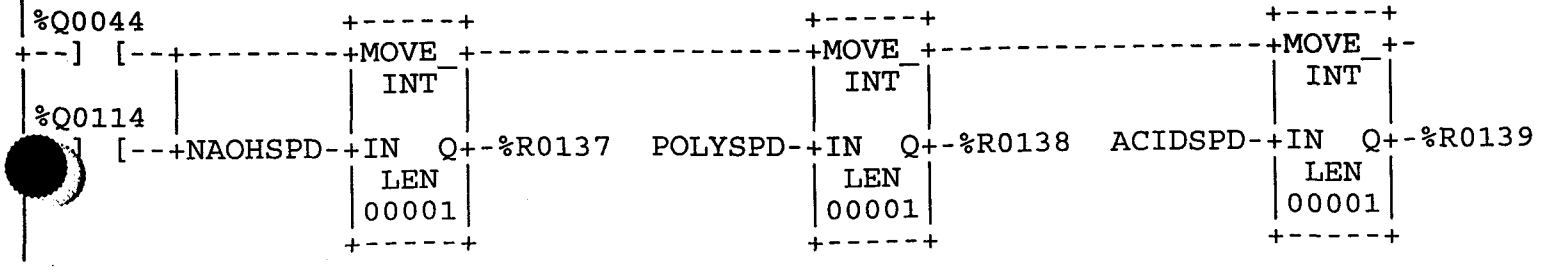

<< RUNG 107 STEP #0410 >>

<< RUNG 108 STEP #0413 >>

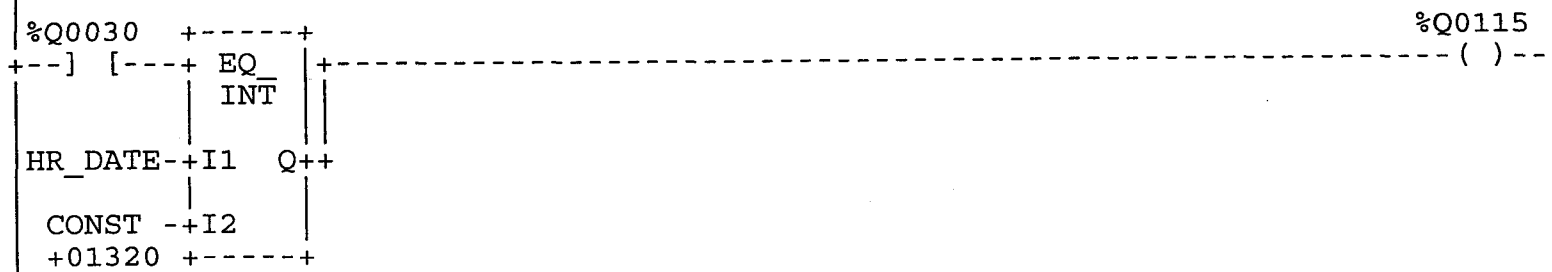

<< RUNG 109 STEP #0416 >>

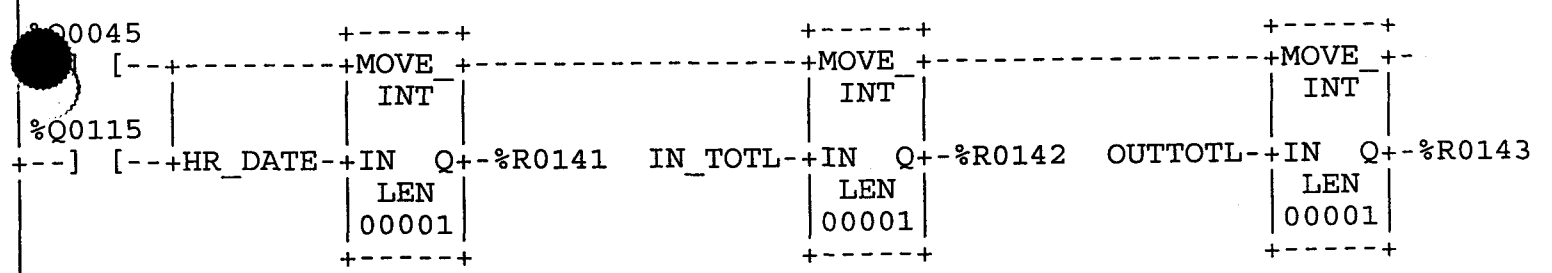

<< RUNG 110 STEP #0421 >>

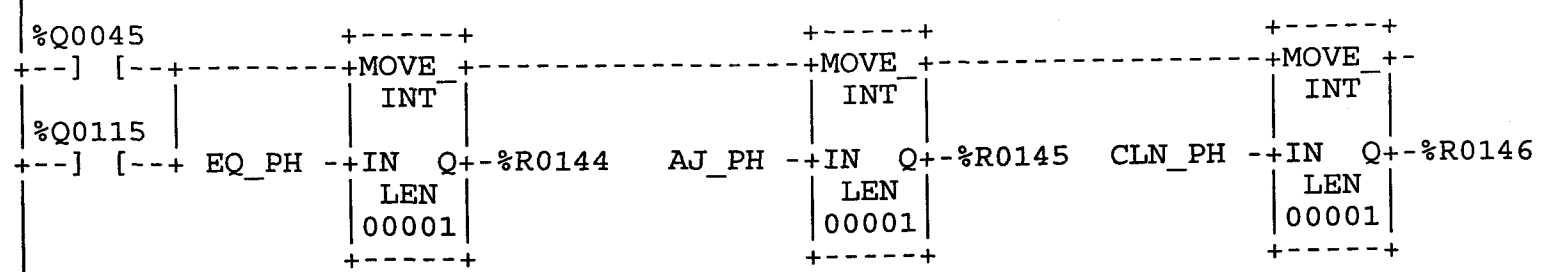

<< RUNG 111 STEP #0426 >>

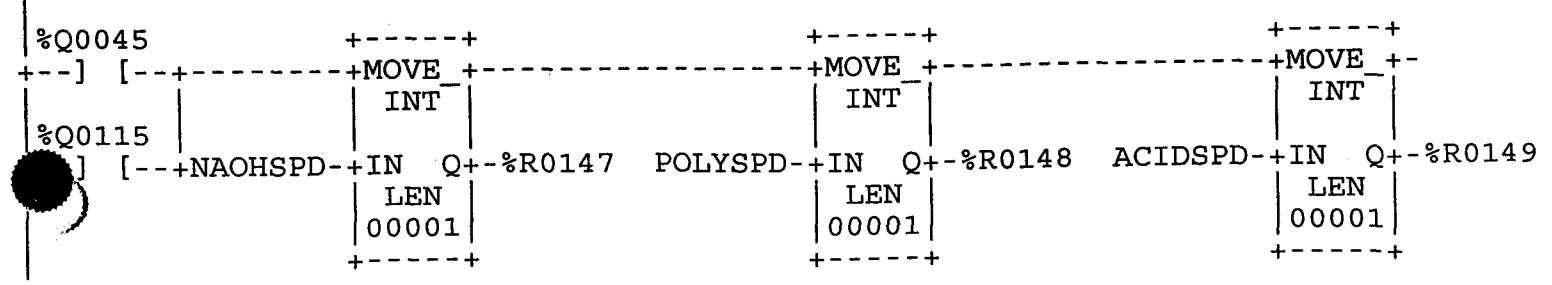

<< RUNG 112 STEP #0431 >>

<< RUNG 113 STEP #0434 >>

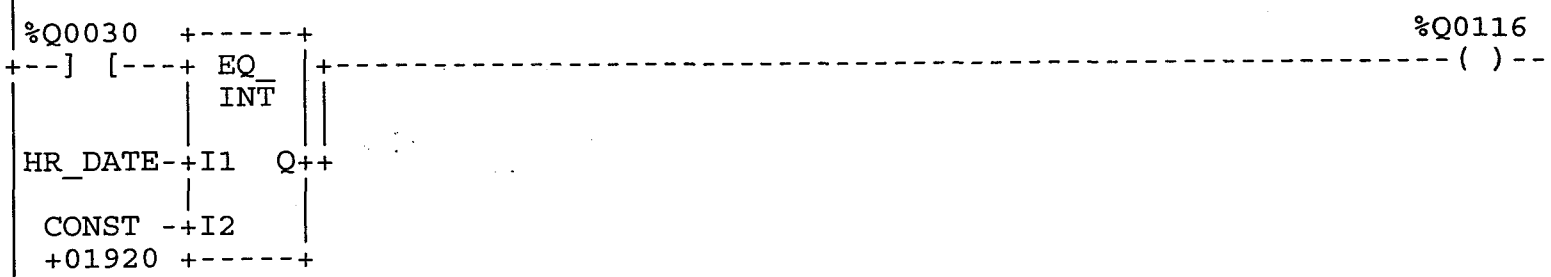

<< RUNG 114 STEP #0437 >>

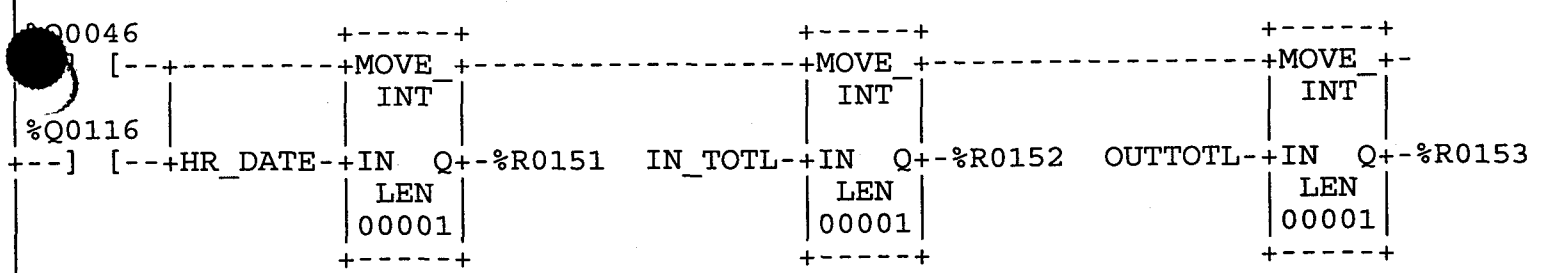

<< RUNG 115 STEP #0442 >>

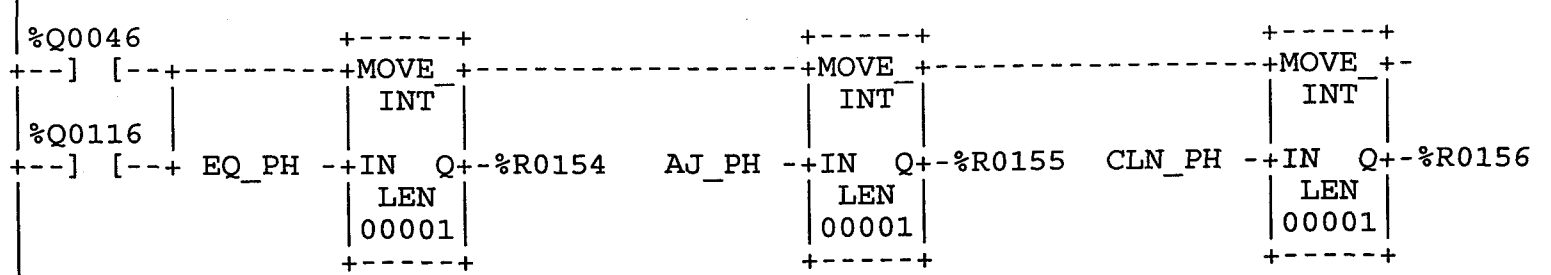

<< RUNG 116 STEP #0447 >>

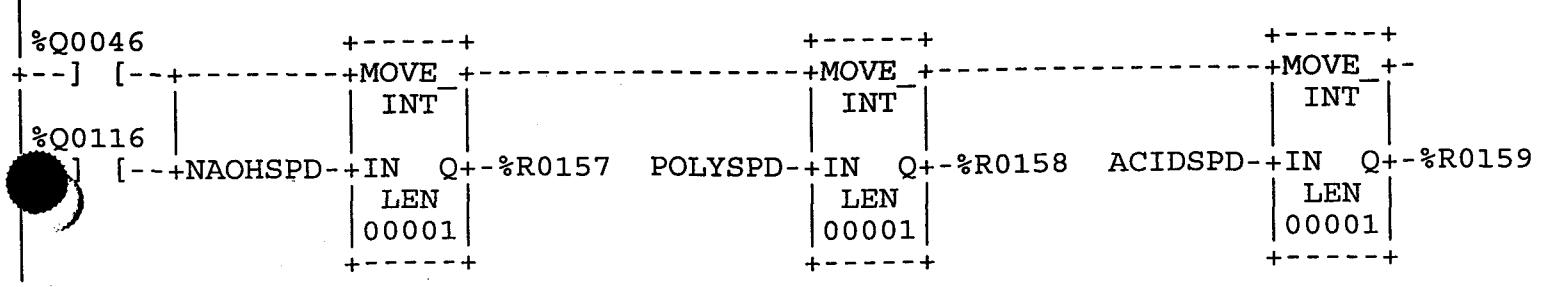

<< RUNG 117 STEP #0452 >>

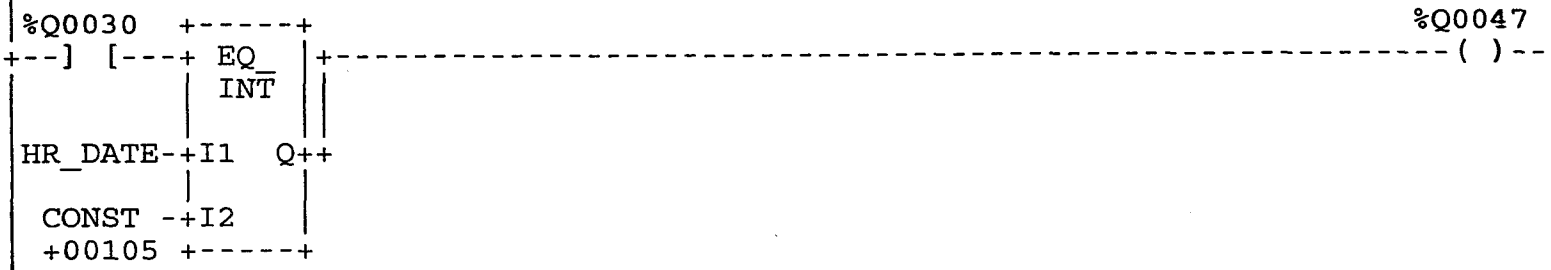

<< RUNG 118 STEP #0455 >>

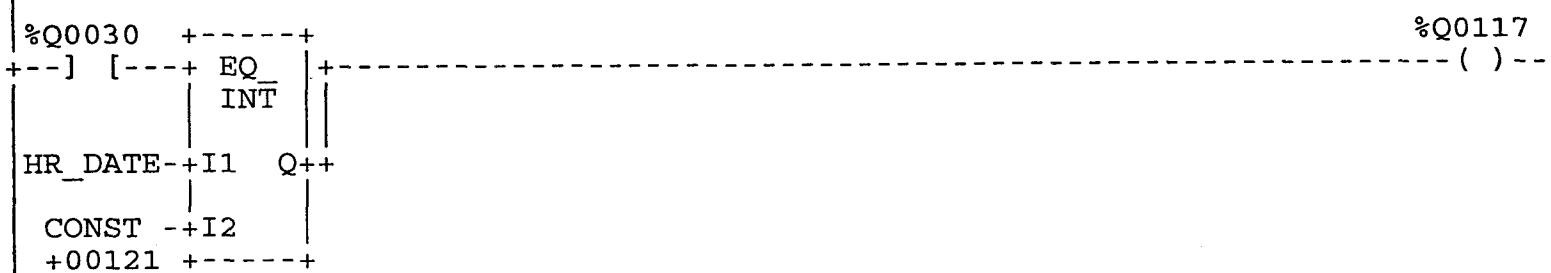

<< RUNG 119 STEP #0458 >>

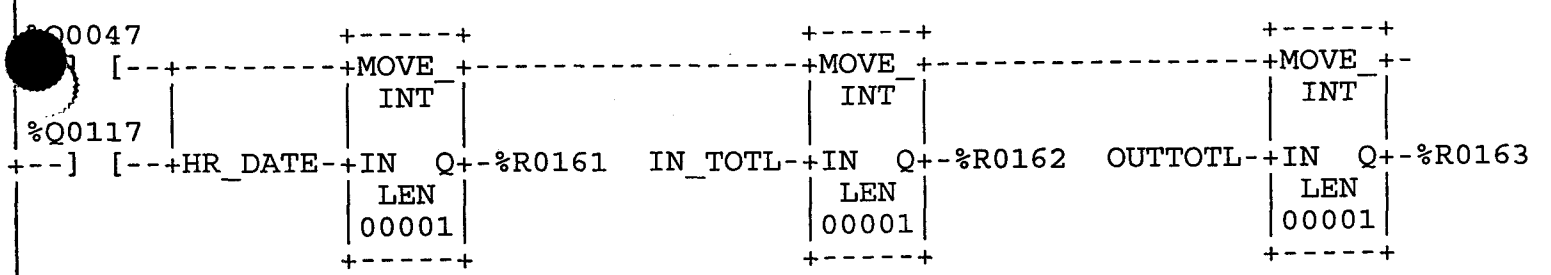

<< RUNG 120 STEP #0463 >>

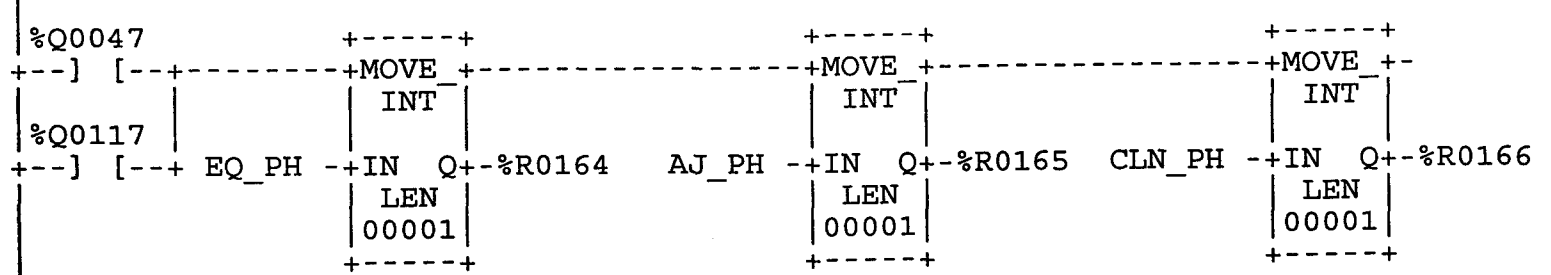

<< RUNG 121 STEP #0468 >>

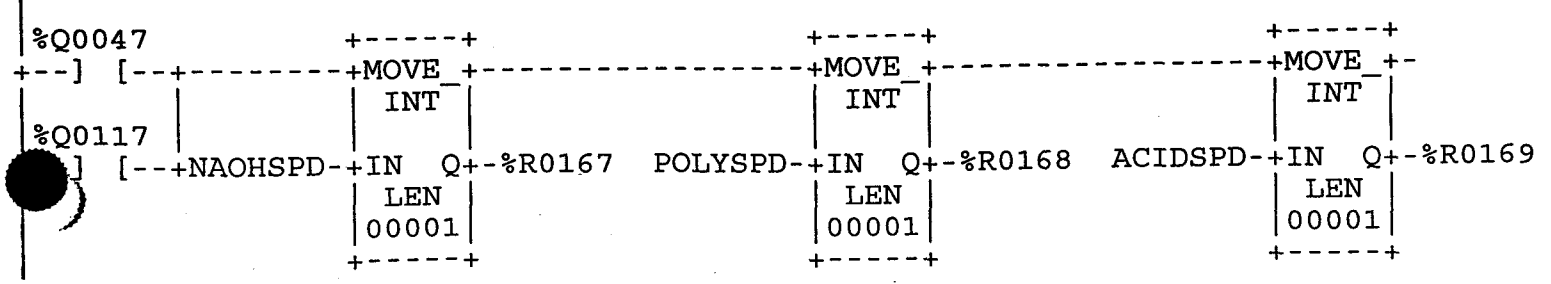

<< RUNG 122 STEP #0473 >>

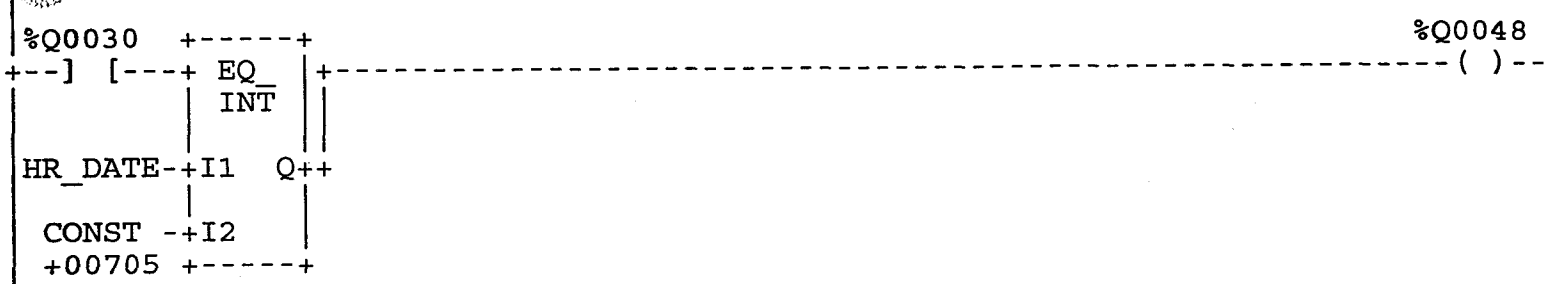

<< RUNG 123 STEP #0476 >>

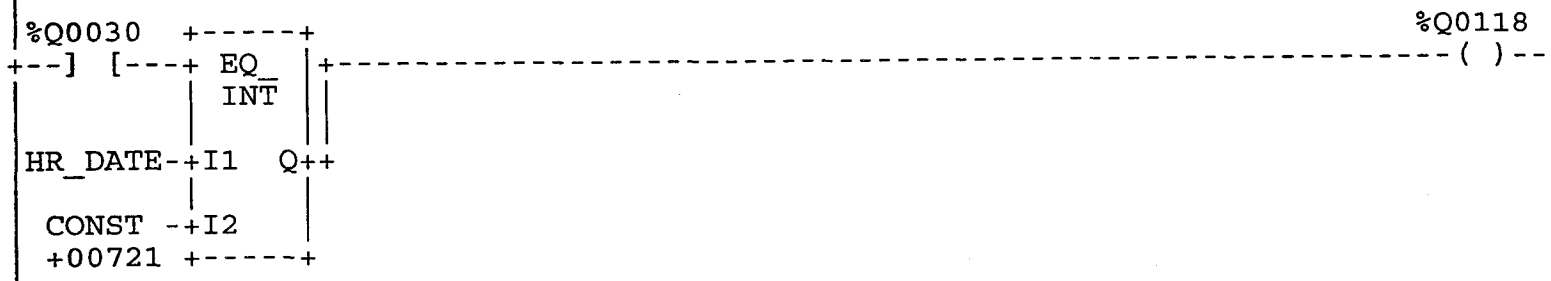

<< RUNG 124 STEP #0479 >>

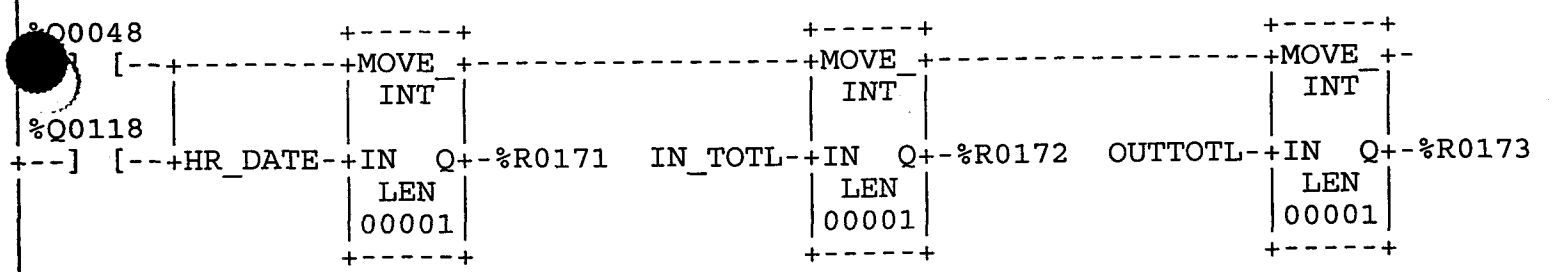

<< RUNG 125 STEP #0484 >>

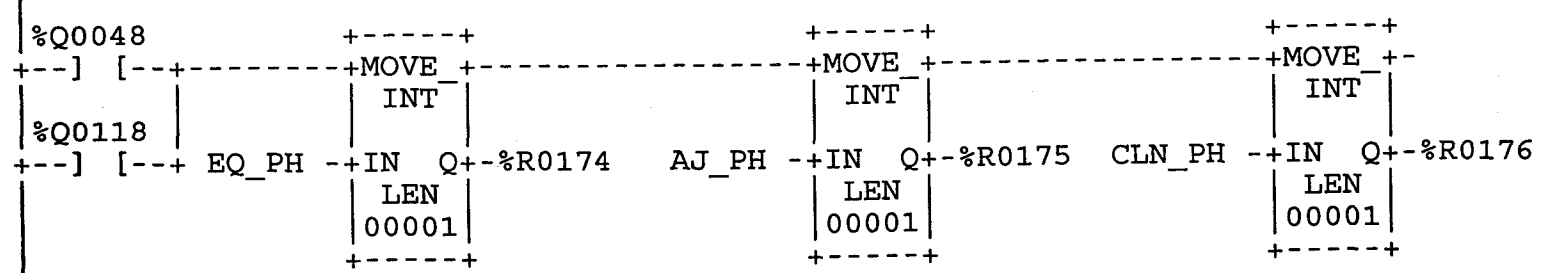

<< RUNG 126 STEP #0489 >>

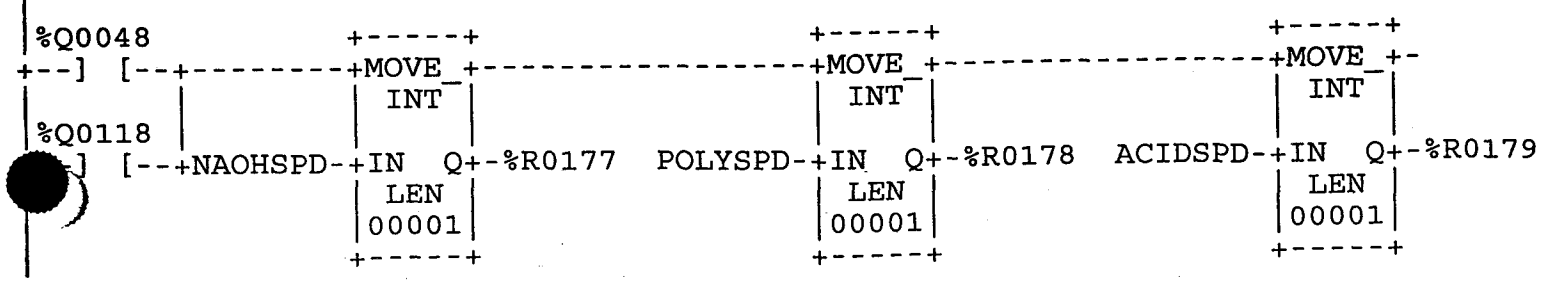

<< RUNG 127 STEP #0494 >>

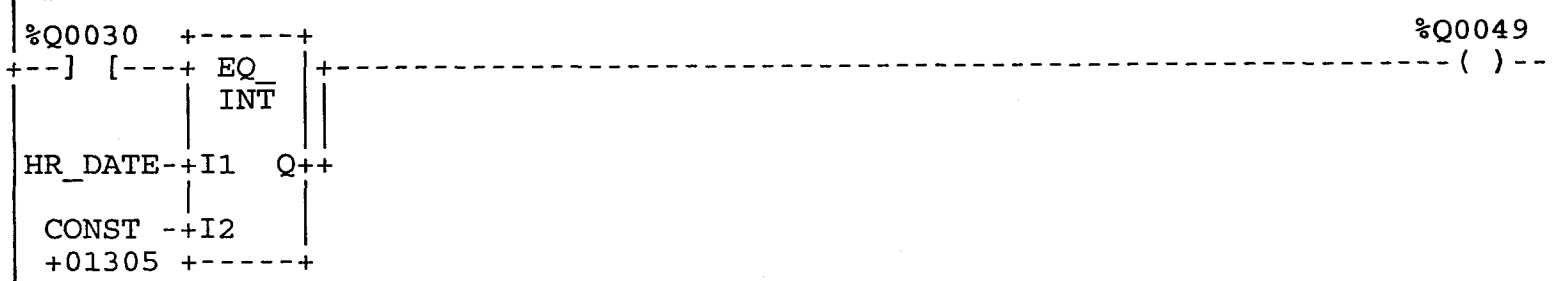

<< RUNG 128 STEP #0497 >>

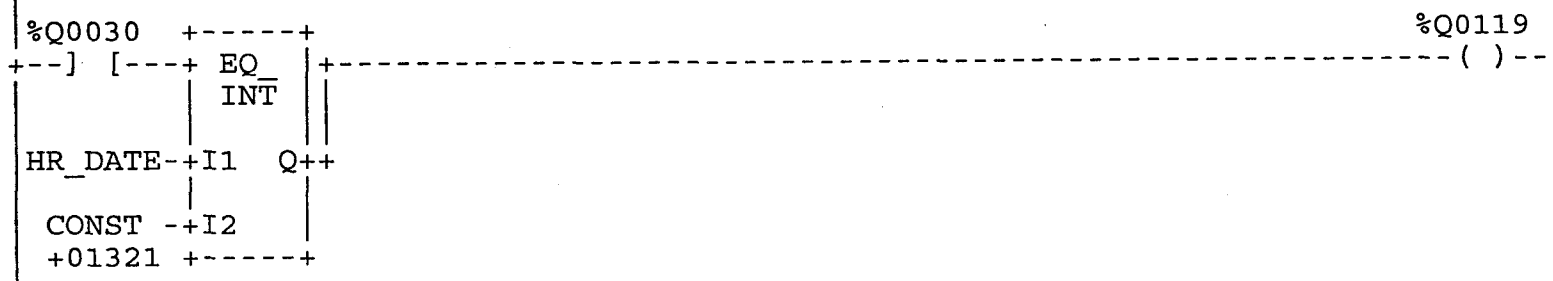

<< RUNG 129 STEP #0500 >>

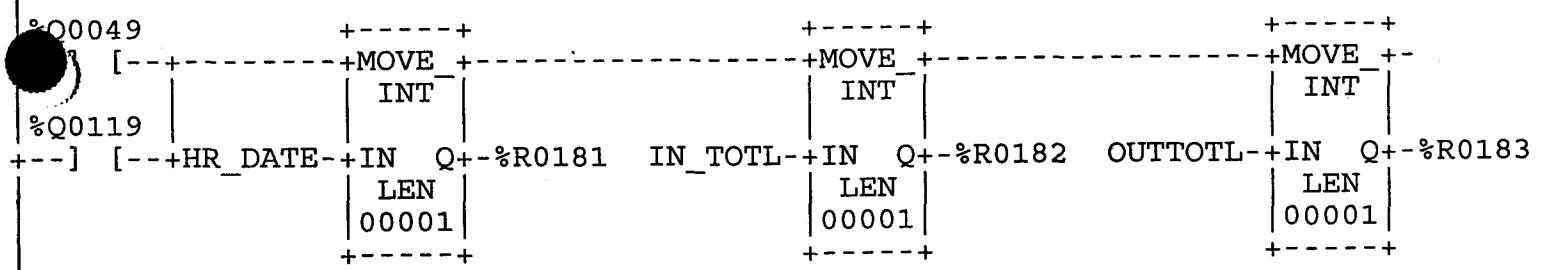

<< RUNG 130 STEP #0505 >>

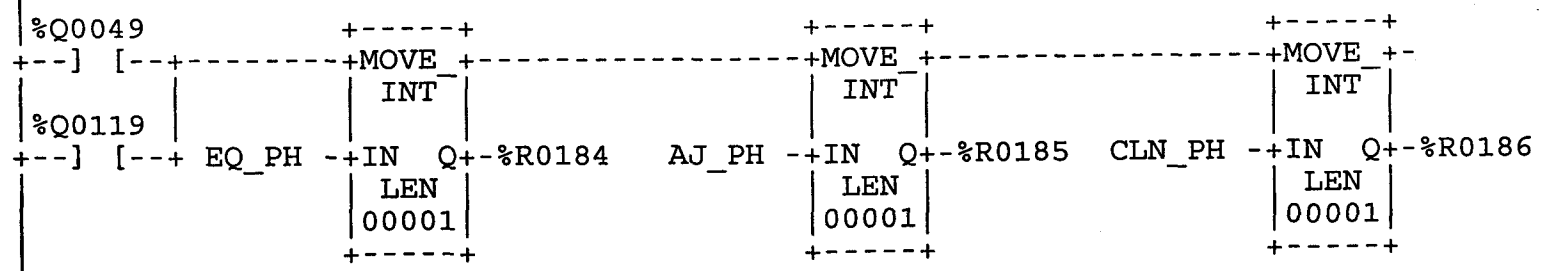

<< RUNG 131 STEP #0510 >>

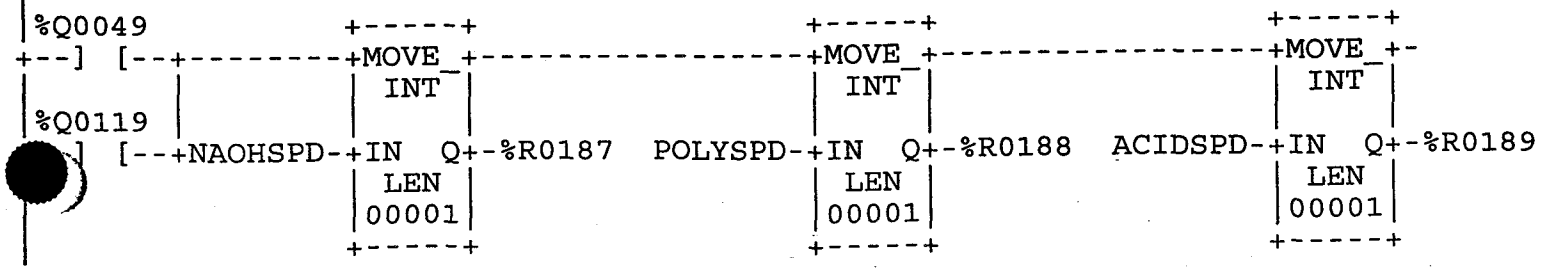

<< RUNG 132 STEP #0515 >>

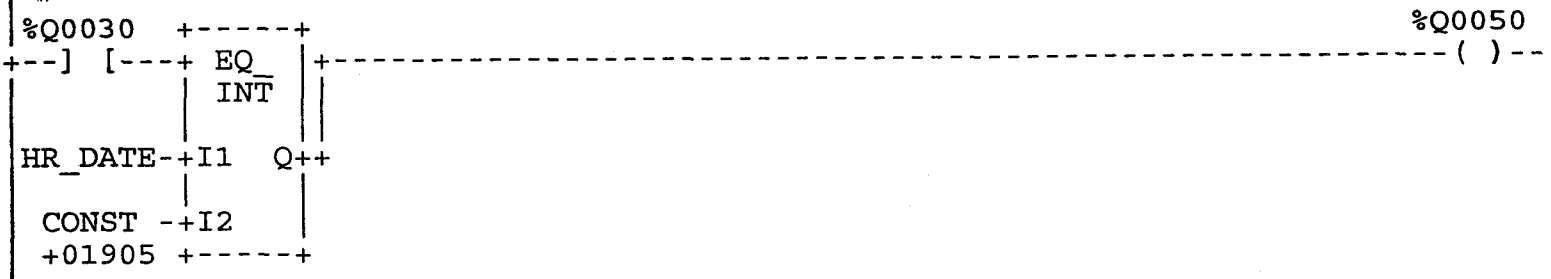

<< RUNG 133 STEP #0518 >>

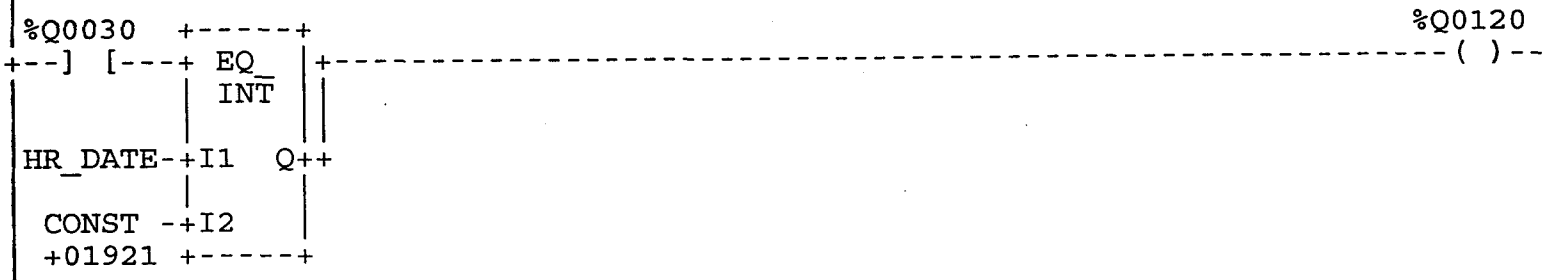

<< RUNG 134 STEP #0521 >>

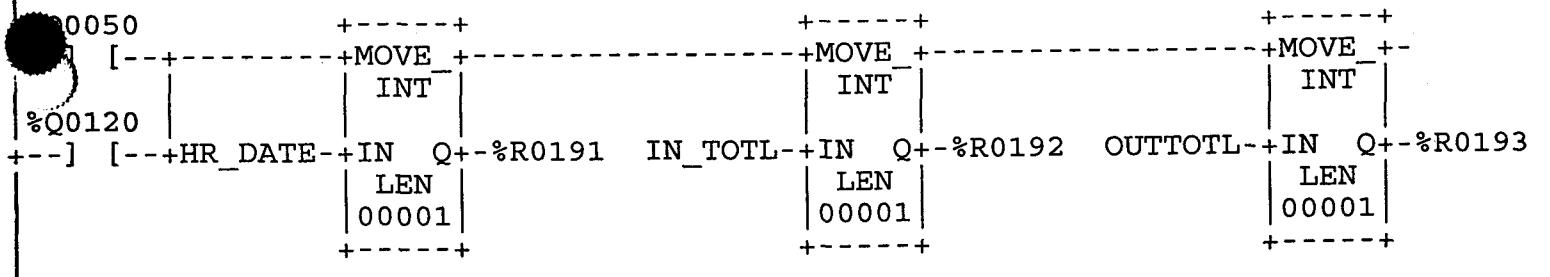

<< RUNG 135 STEP #0526 >>

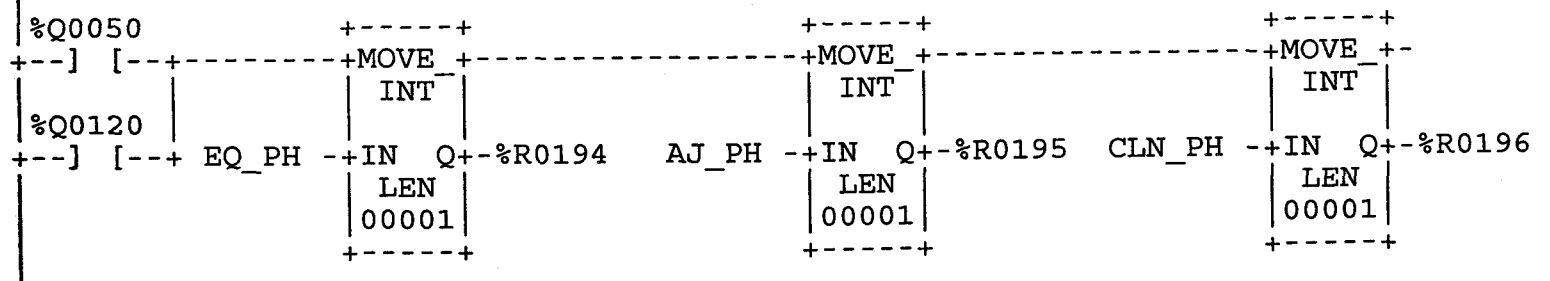

<< RUNG 136 STEP #0531 >>

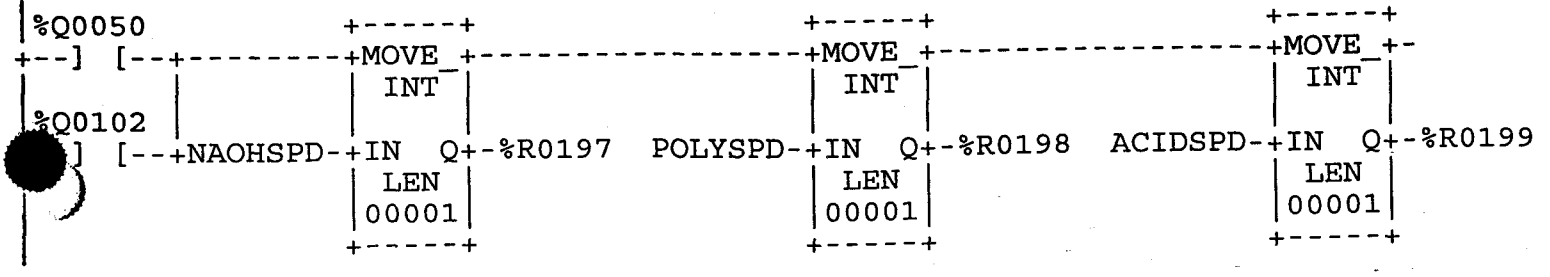

<< RUNG 137 STEP #0536 >>

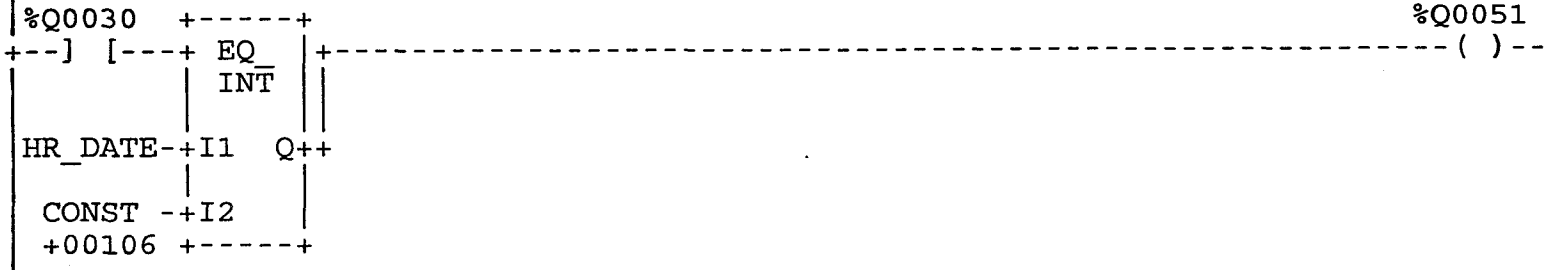

<< RUNG 138 STEP #0539 >>

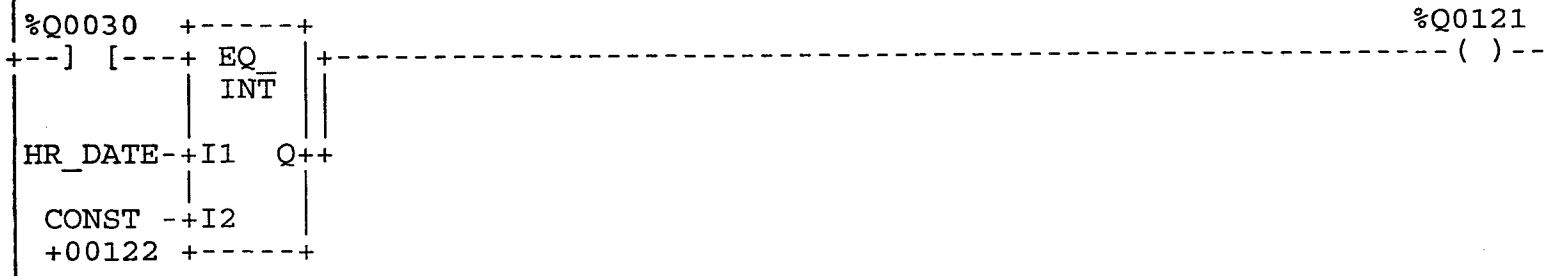

<< RUNG 139 STEP #0542 >>

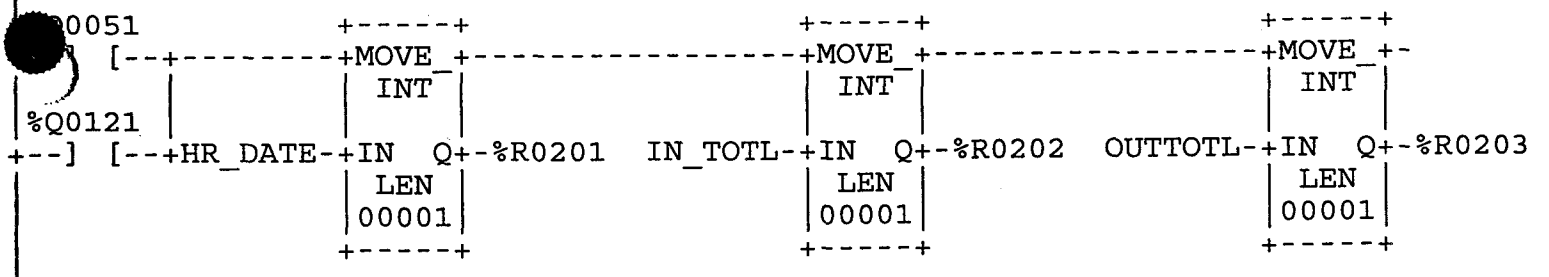

<< RUNG 140 STEP #0547 >>

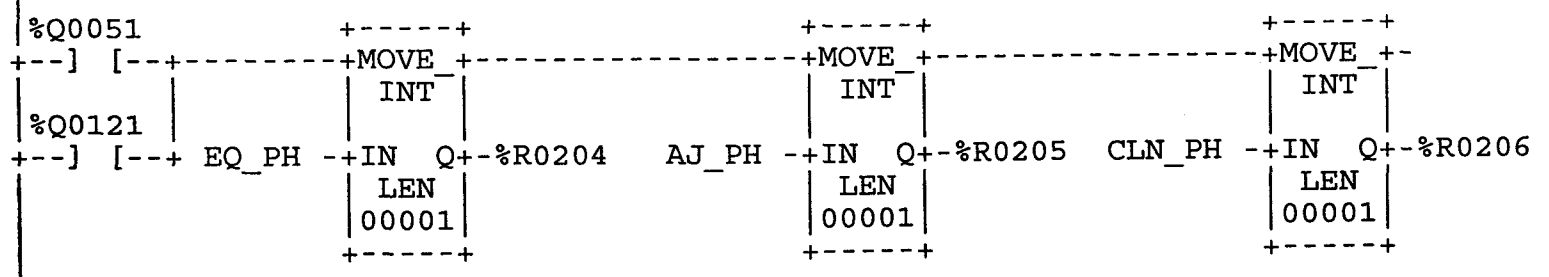

<< RUNG 141 STEP #0552 >>

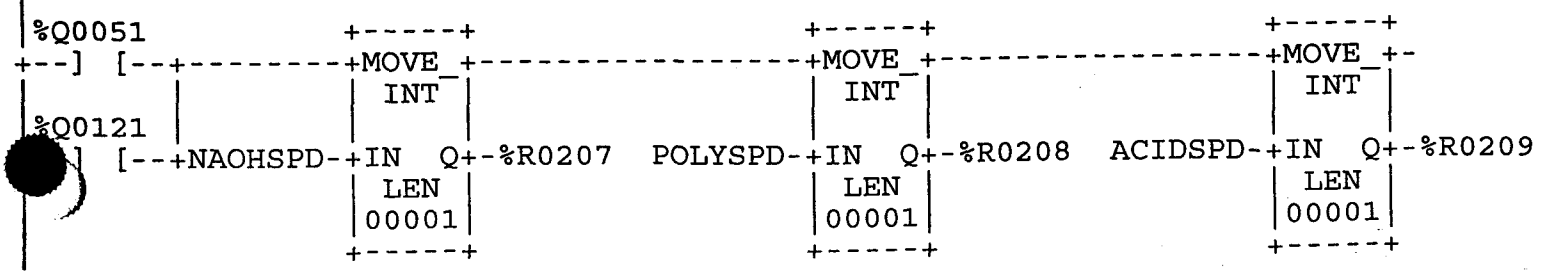

<< RUNG 142 STEP #0557 >>

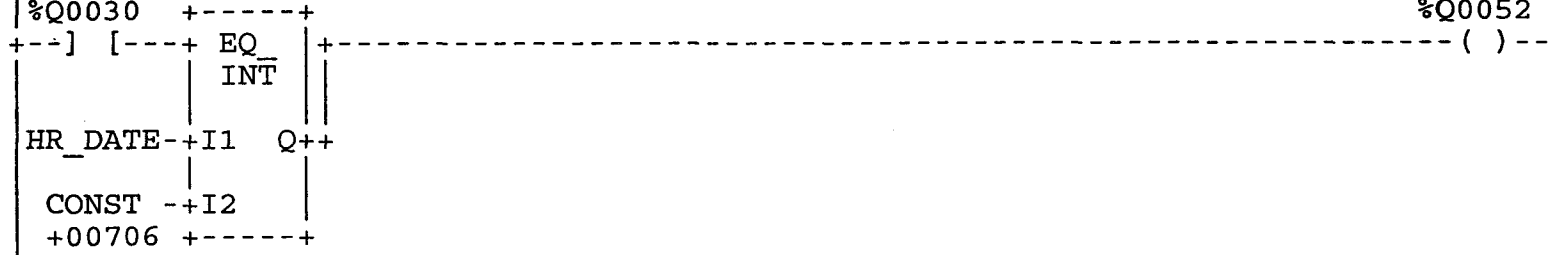

<< RUNG 143 STEP #0560 >>

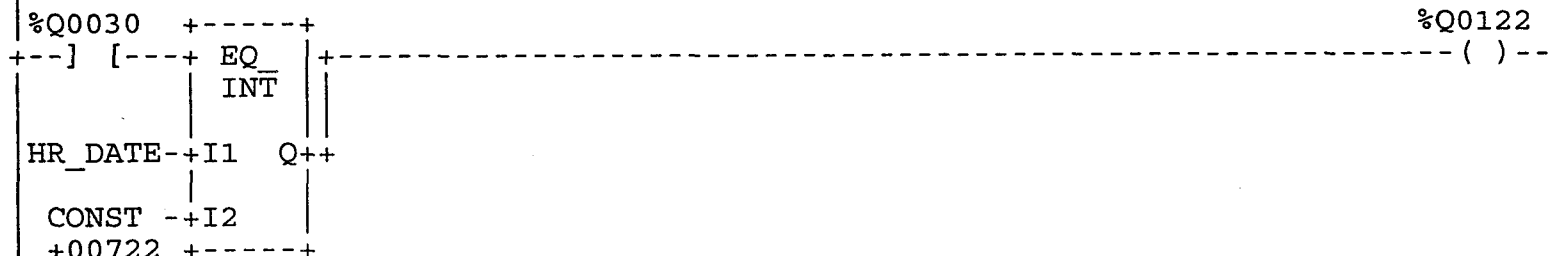

<< RUNG 144 STEP #0563 >>

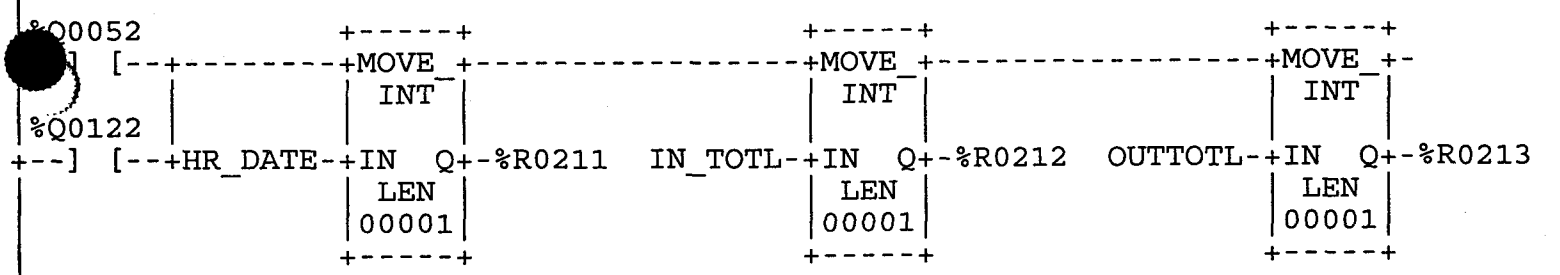

<< RUNG 145 STEP #0568 >>

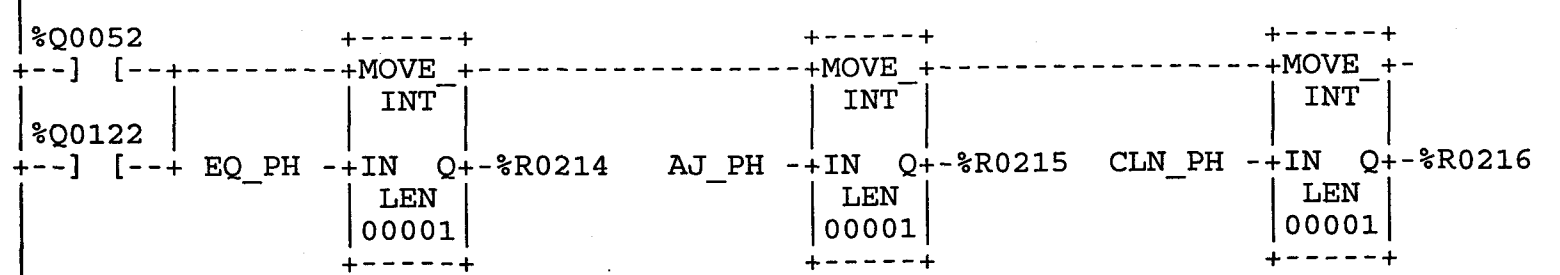

<< RUNG 146 STEP #0573 >>

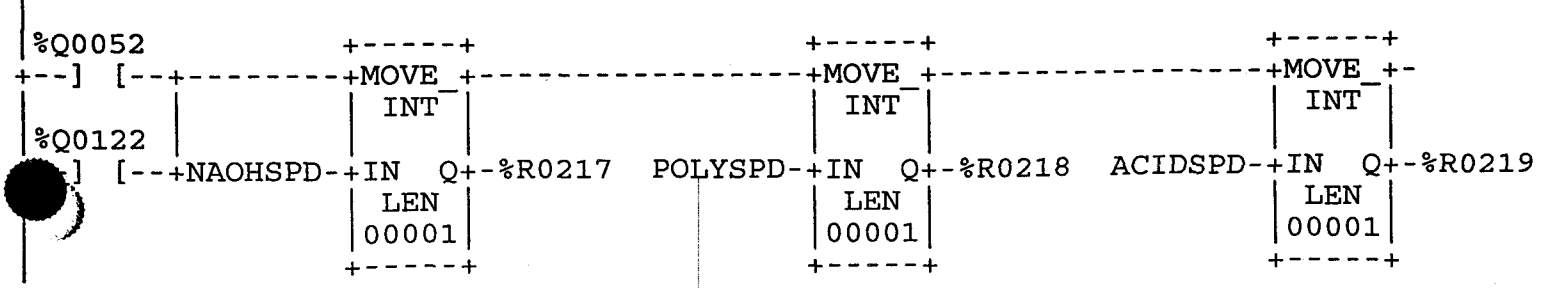

<< RUNG 147 STEP #0578 >>

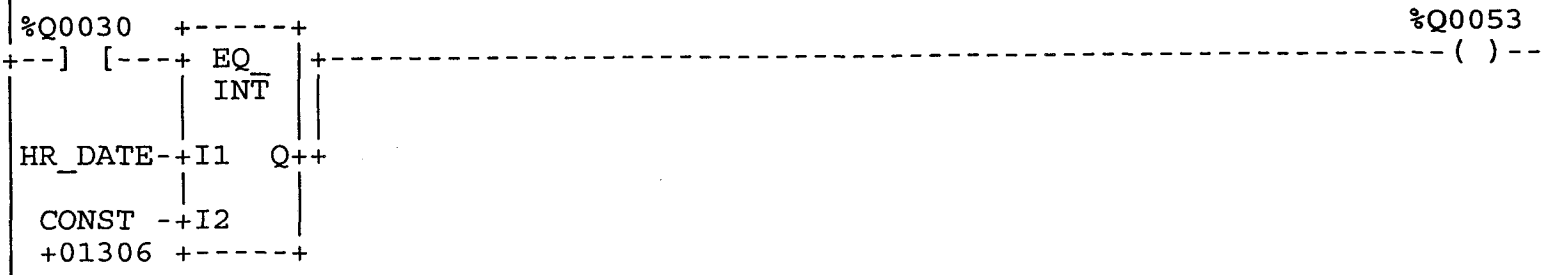

<< RUNG 148 STEP #0581 >>

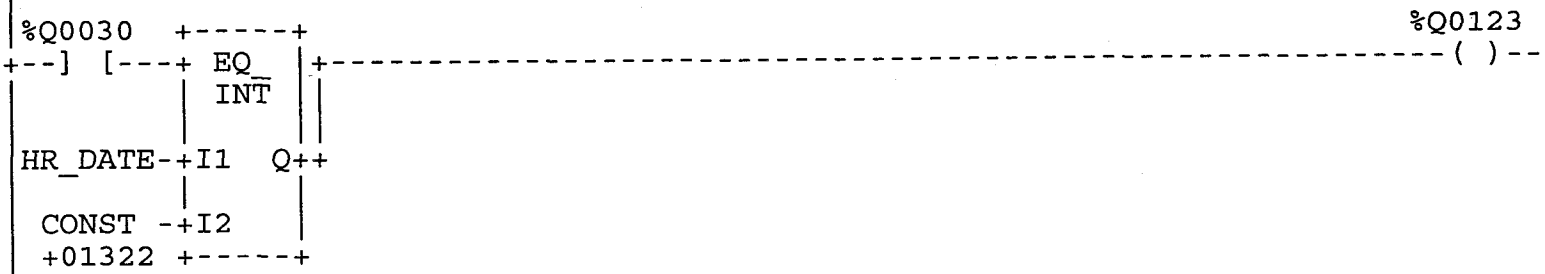

<< RUNG 149 STEP #0584 >>

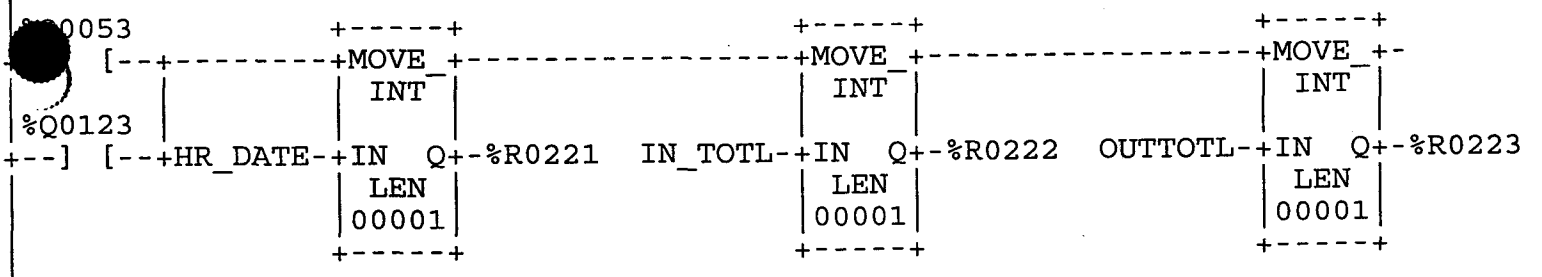

<< RUNG 150 STEP #0589 >>

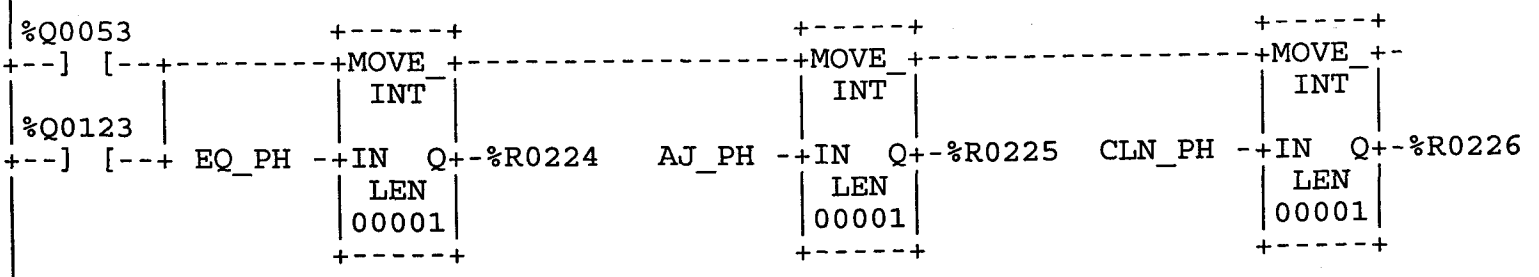

<< RUNG 151 STEP #0594 >>

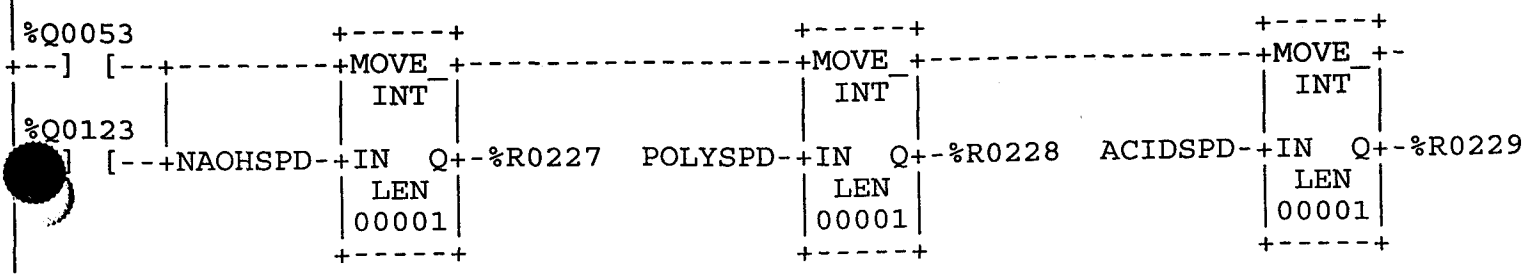

<< RUNG 152 STEP #0599 >>

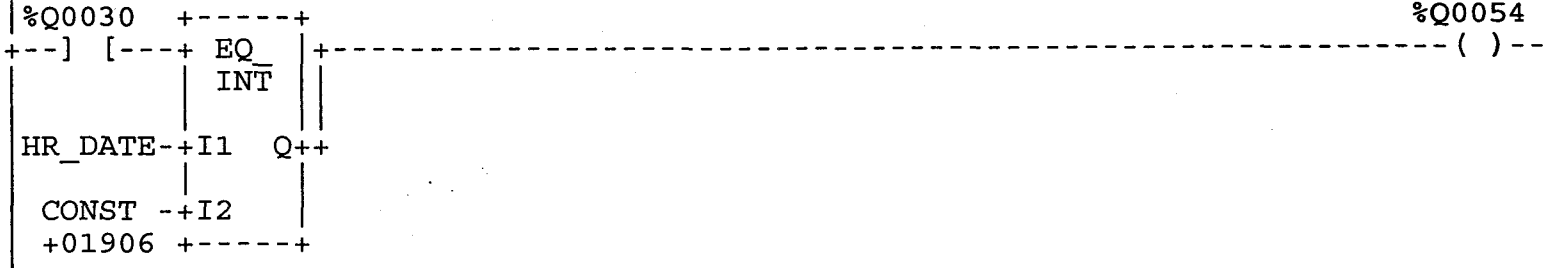

<< RUNG 153 STEP #0602 >>

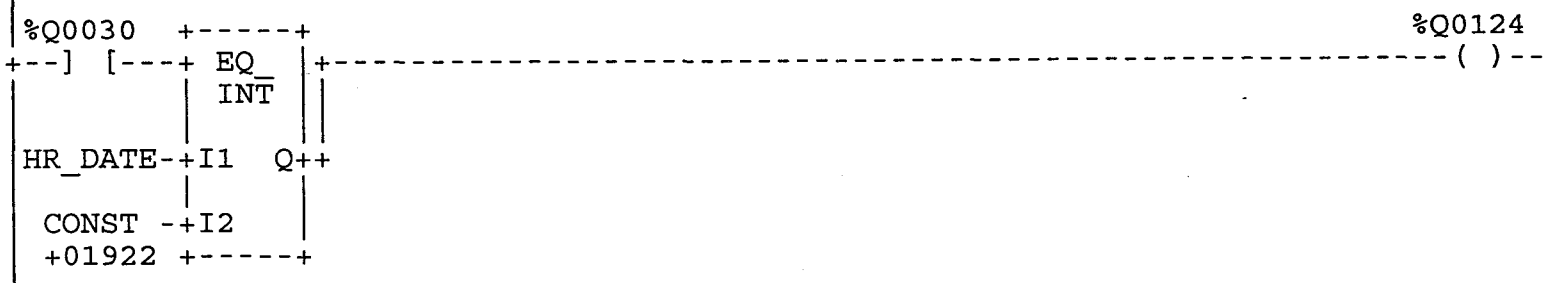

<< RUNG 154 STEP #0605 >>

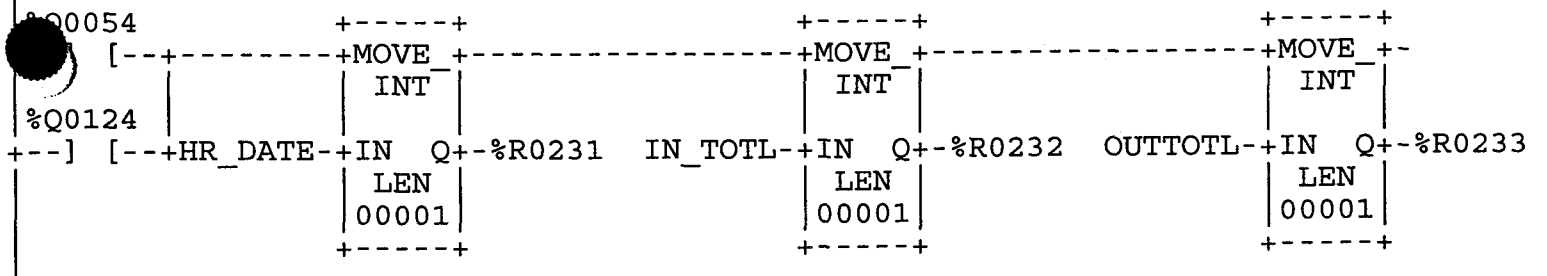

<< RUNG 155 STEP #0610 >>

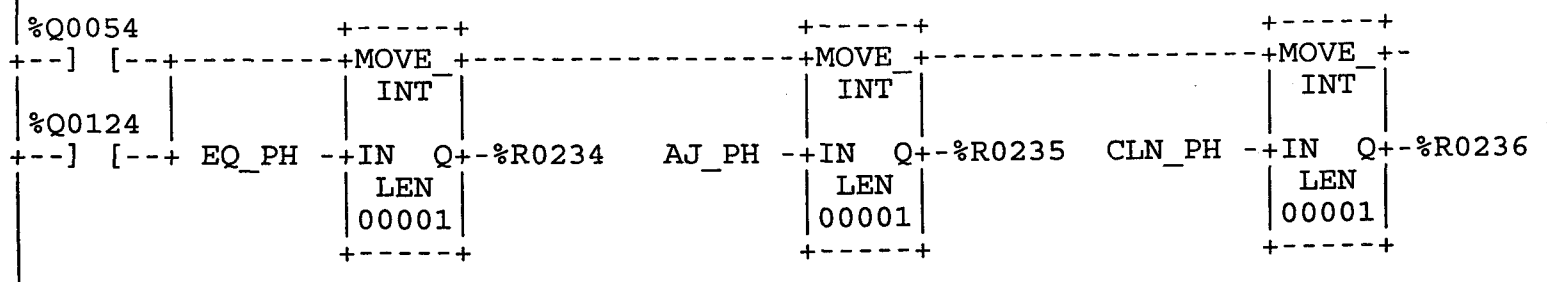

<< RUNG 156 STEP #0615 >>

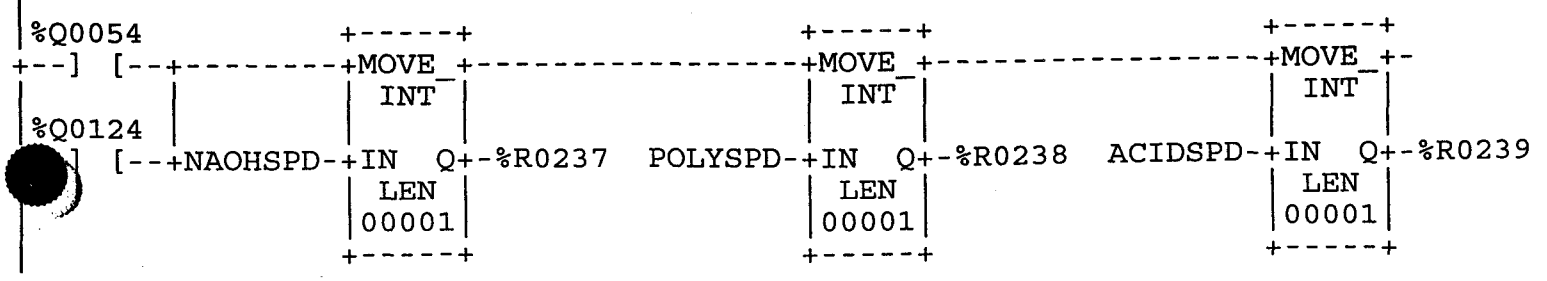

<< RUNG 157 STEP #0620 >>

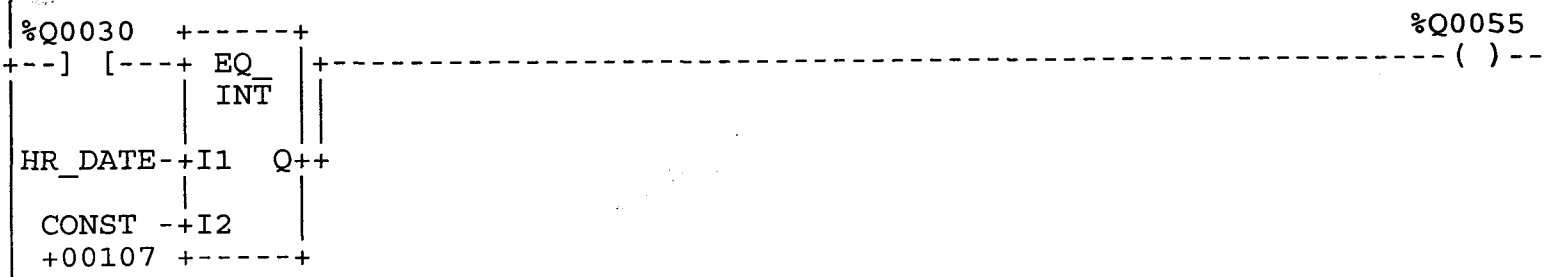

<< RUNG 158 STEP #0623 >>

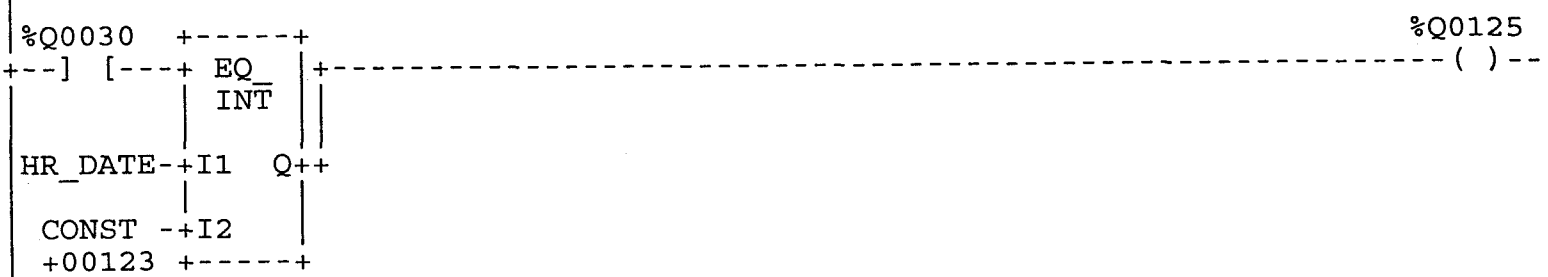

<< RUNG 159 STEP #0626 >>

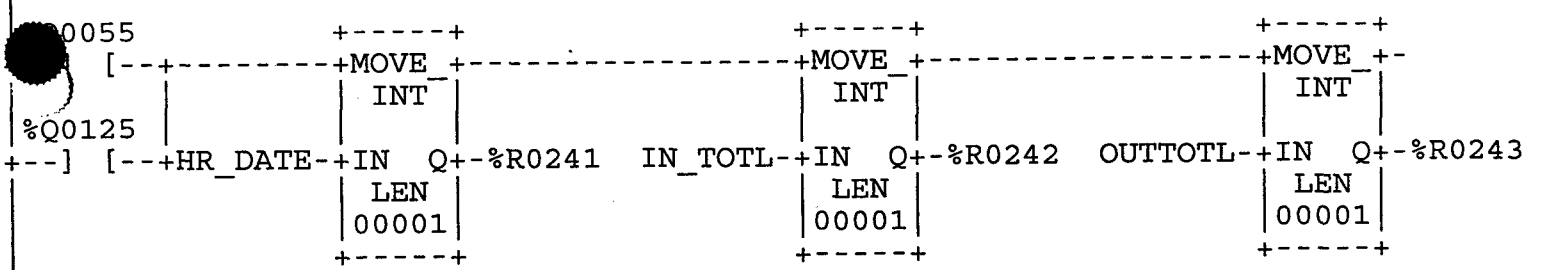

<< RUNG 160 STEP #0631 >>

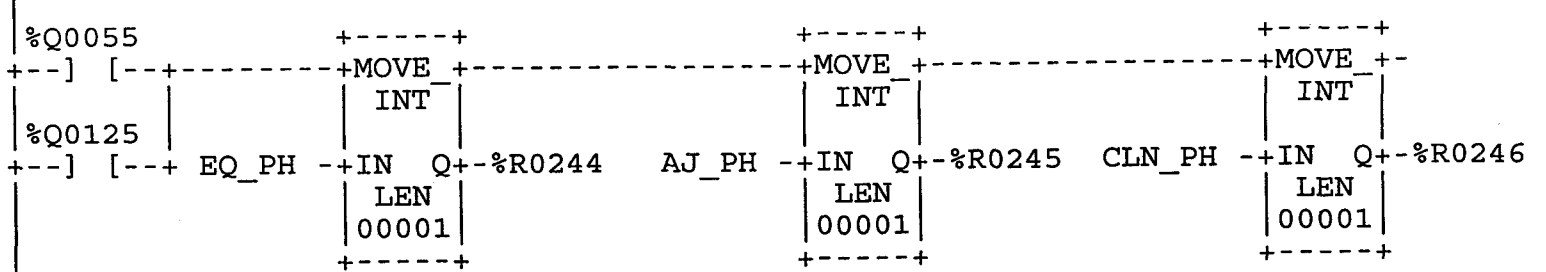

<< RUNG 161 STEP #0636 >>

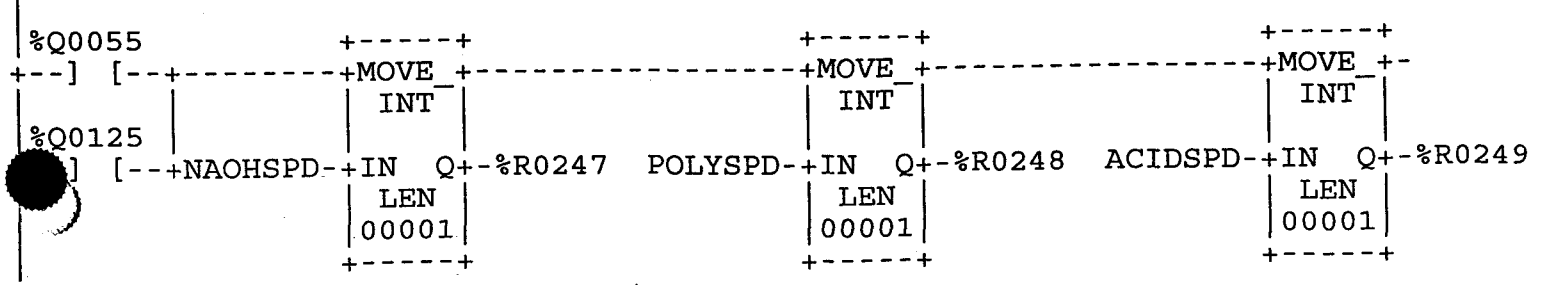

<< RUNG 162 STEP #0641 >>

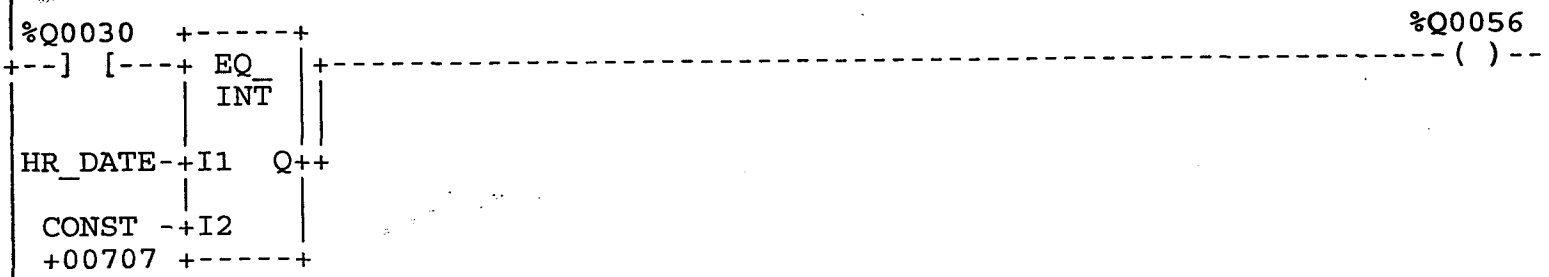

<< RUNG 163 STEP #0644 >>

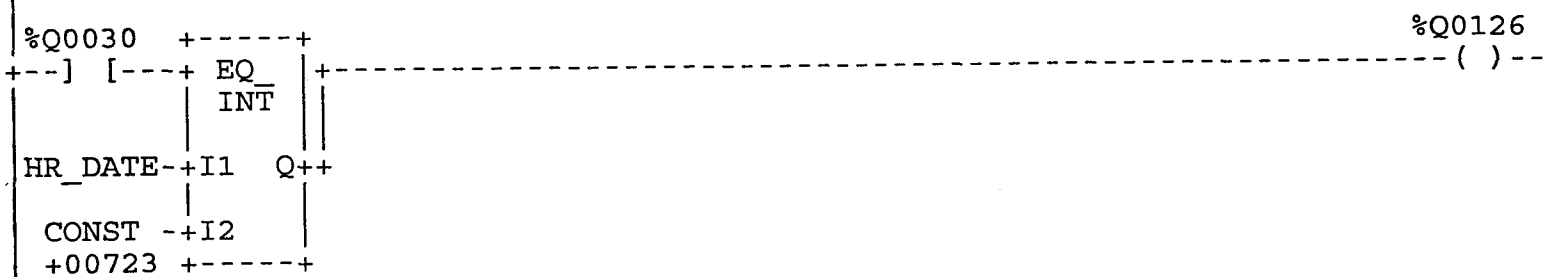

<< RUNG 164 STEP #0647 >>

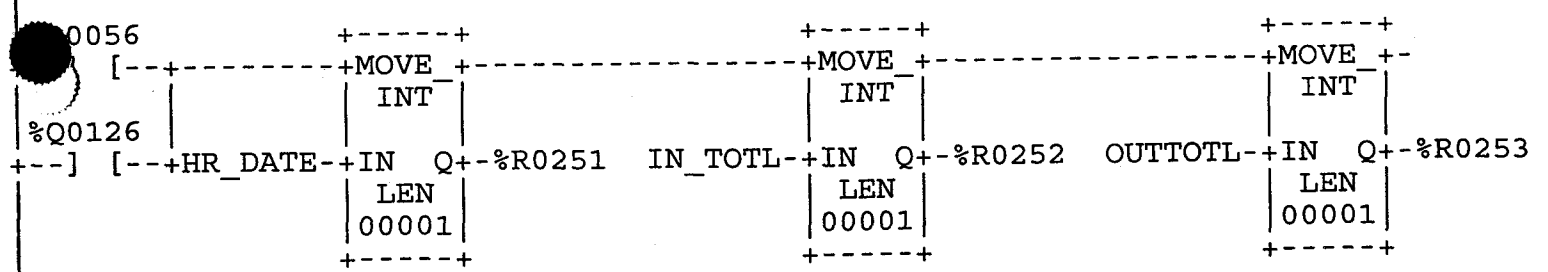

<< RUNG 165 STEP #0652 >>

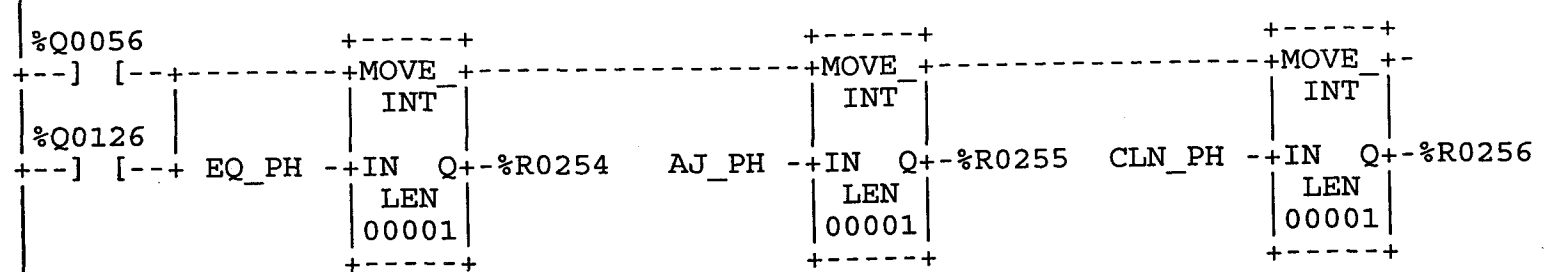

<< RUNG 166 STEP #0657 >>

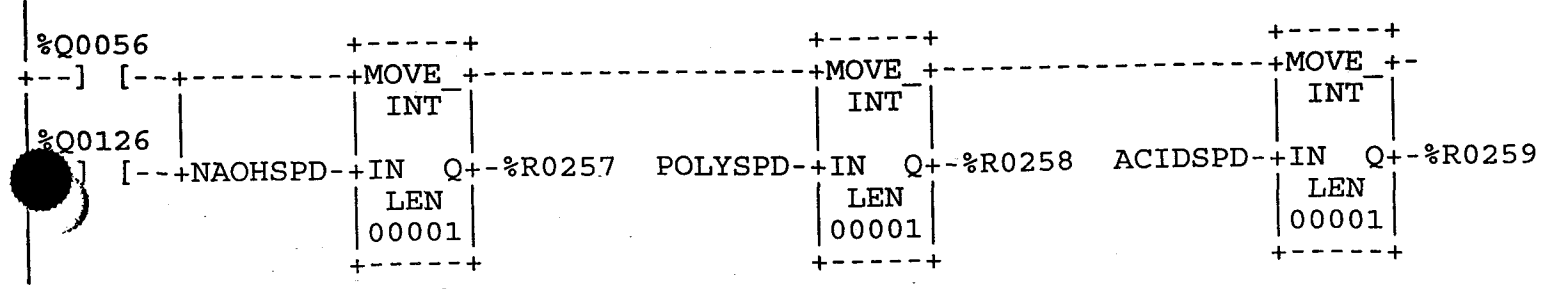

<< RUNG 167 STEP #0662 >>

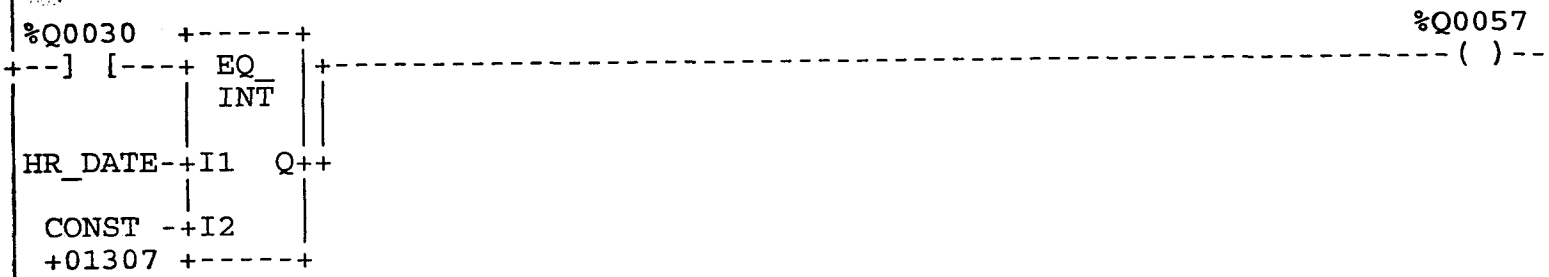

<< RUNG 168 STEP #0665 >>

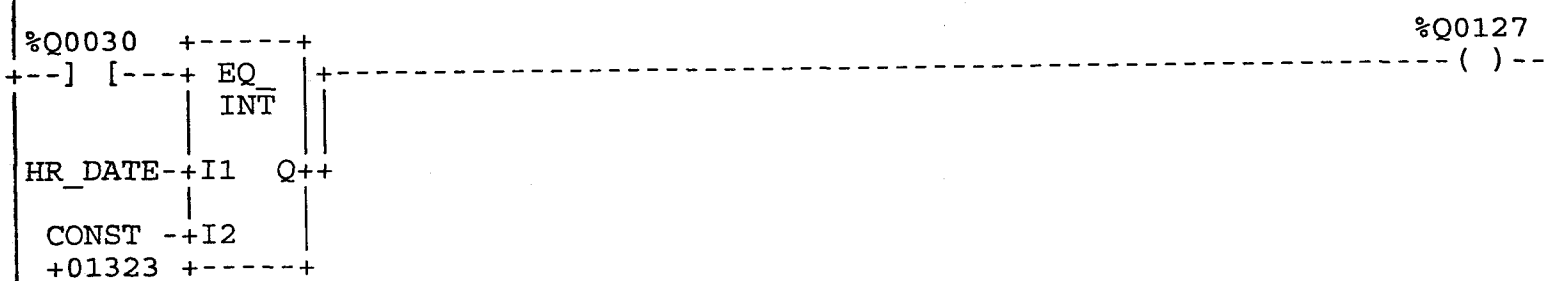

<< RUNG 169 STEP #0668 >>

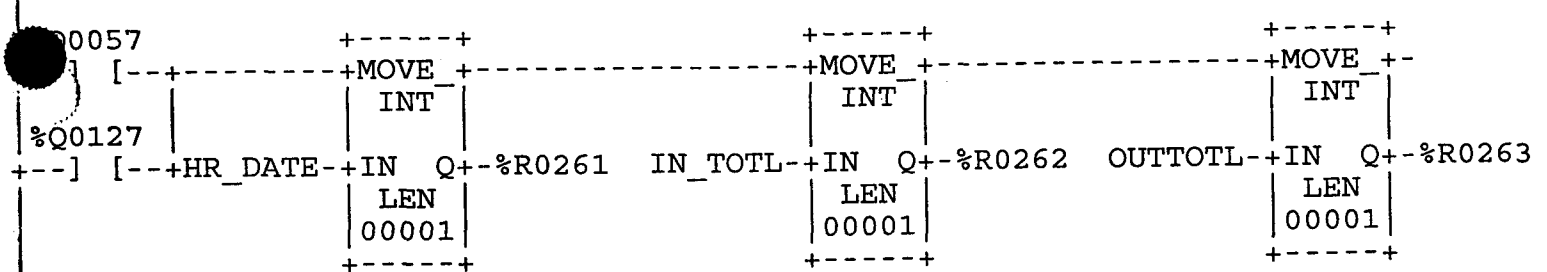

<< RUNG 170 STEP #0673 >>

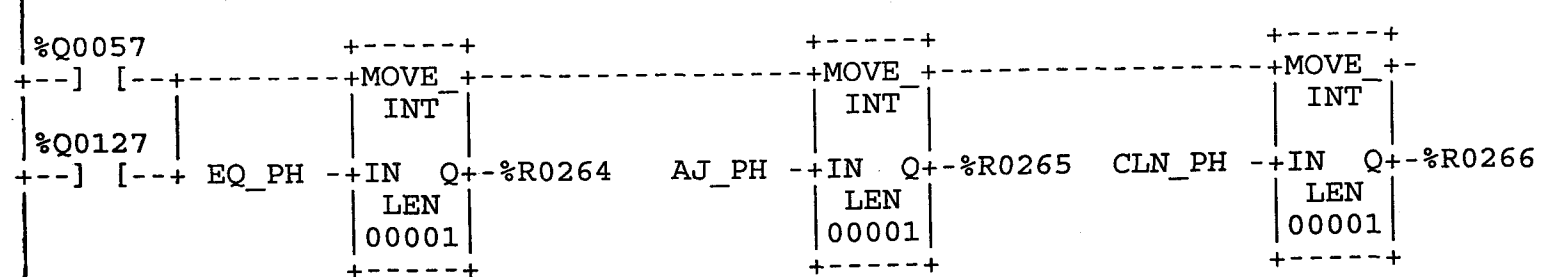

<< RUNG 171 STEP #0678 >>

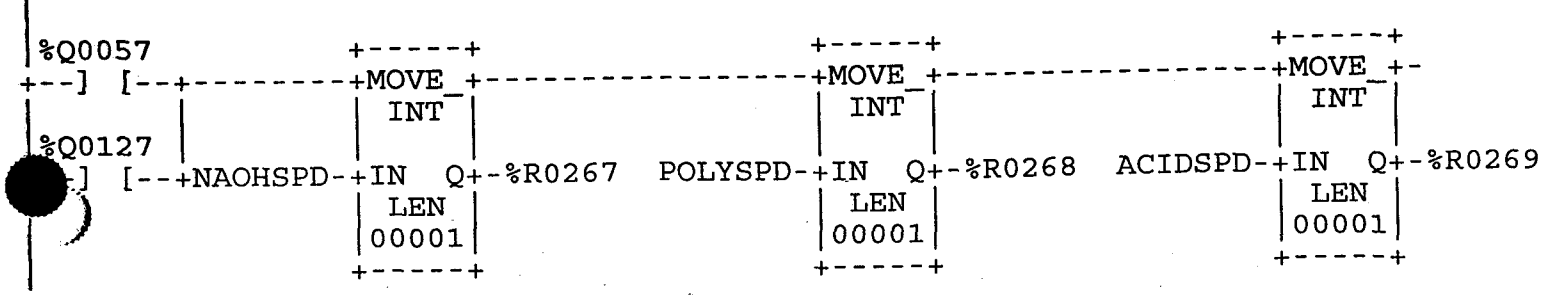

<< RUNG 172 STEP #0683 >>

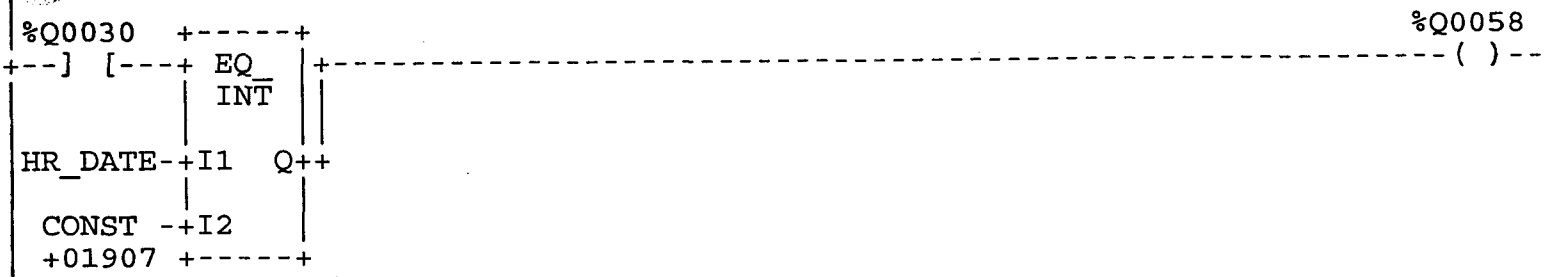

<< RUNG 173 STEP #0686 >>

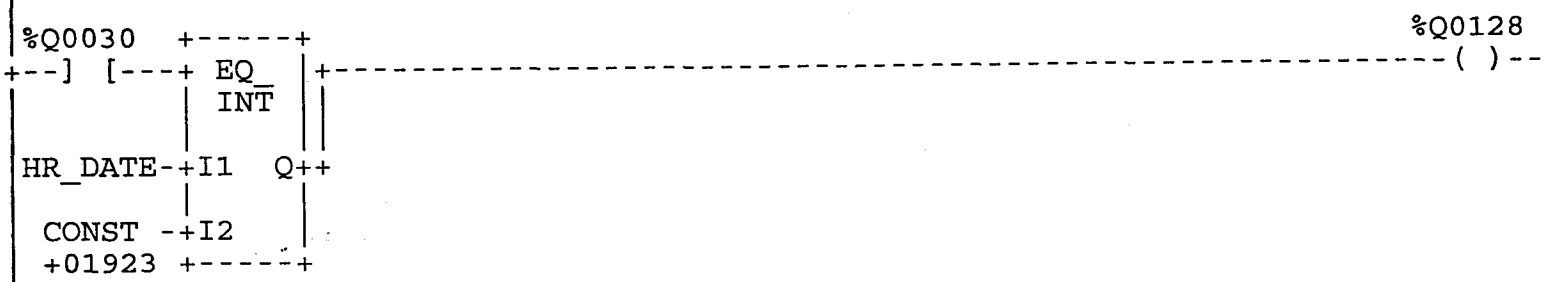

<< RUNG 174 STEP #0689 >>

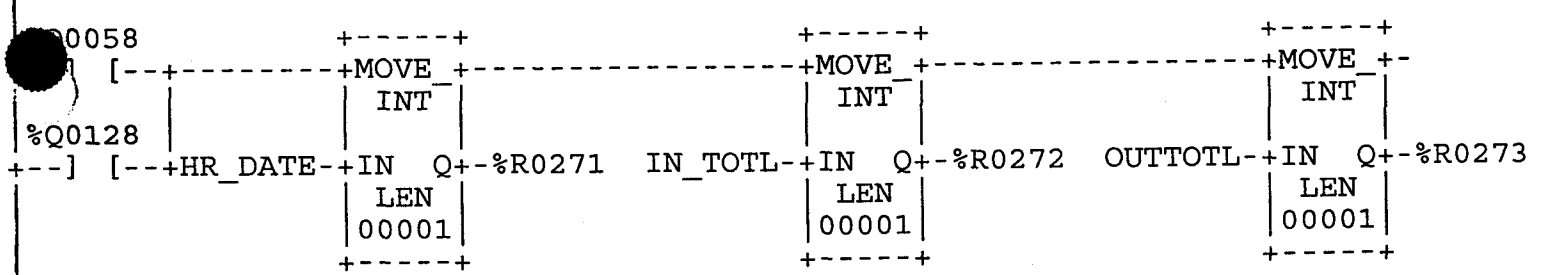

<< RUNG 175 STEP #0694 >>

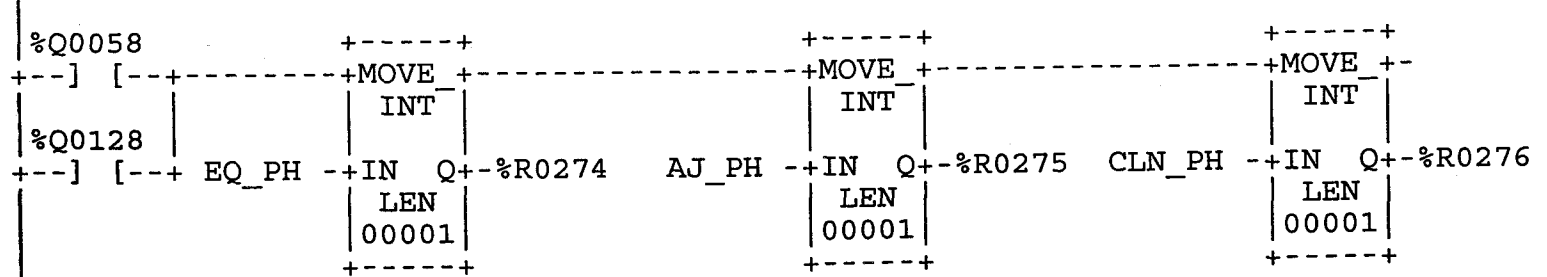

<< RUNG 176 STEP #0699 >>

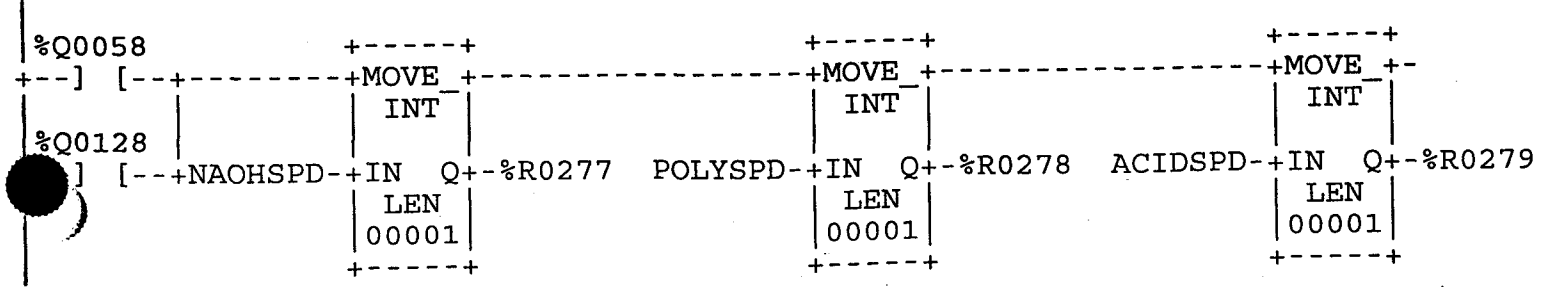

<< RUNG 177 STEP #0704 >>

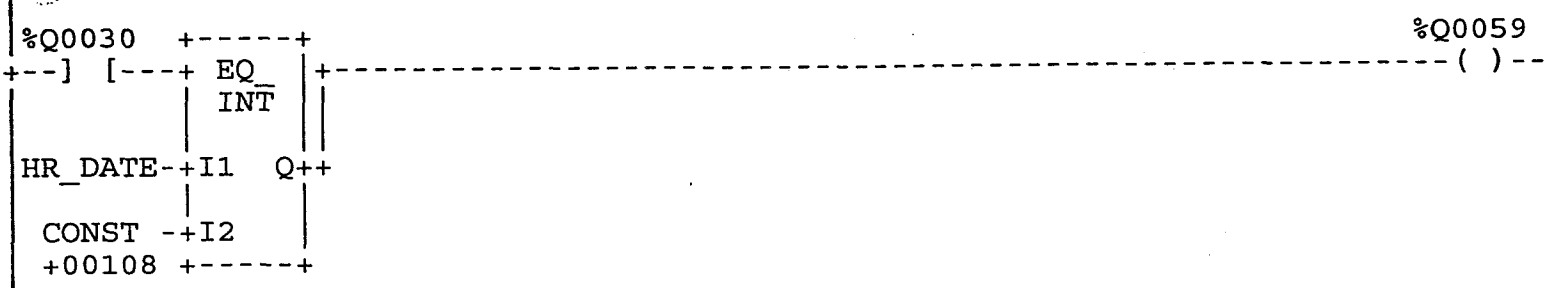

<< RUNG 178 STEP #0707 >>

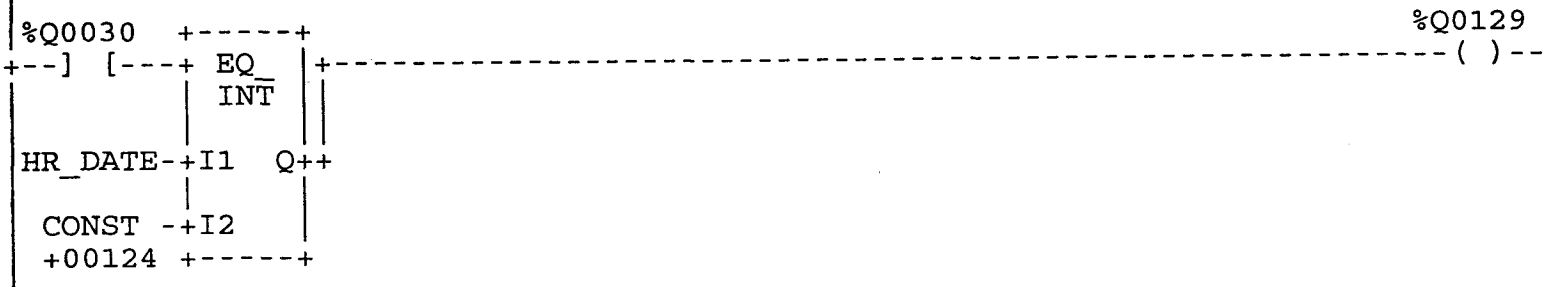

<< RUNG 179 STEP #0710 >>

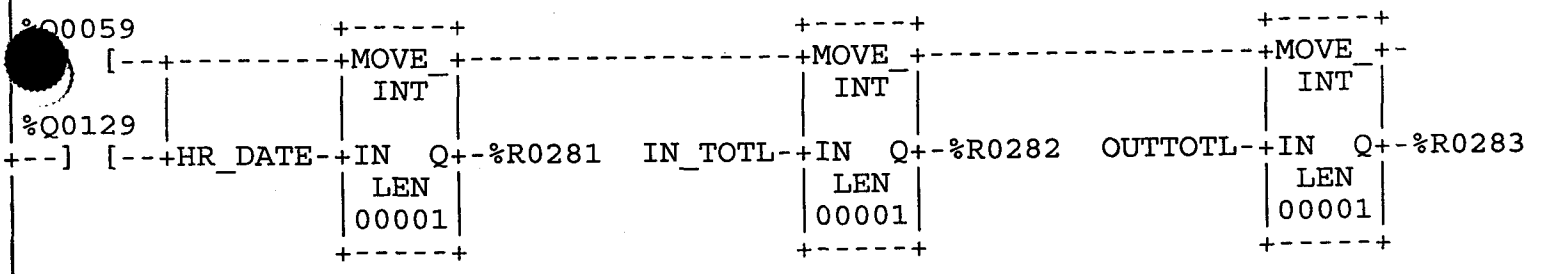

<< RUNG 180 STEP #0715 >>

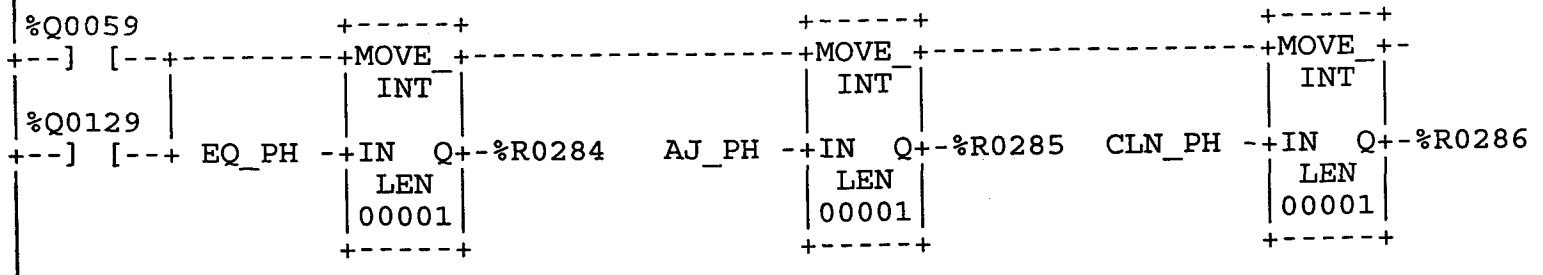

<< RUNG 181 STEP #0720 >>

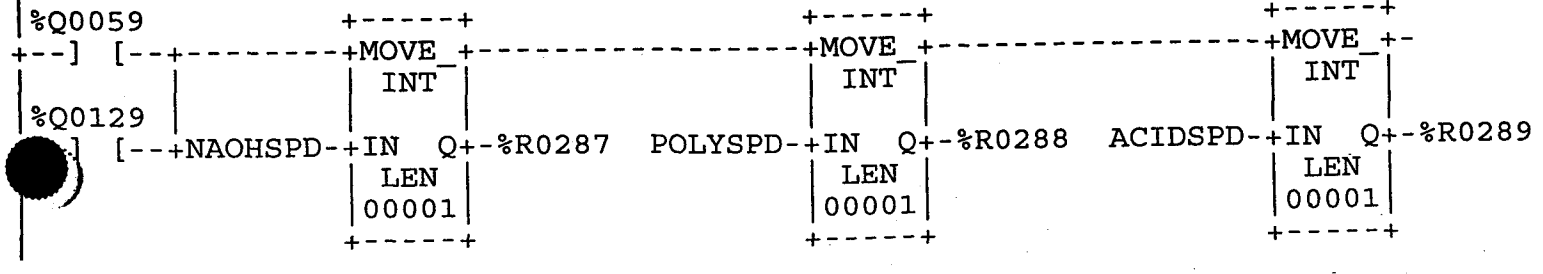

<< RUNG 182 STEP #0725 >>

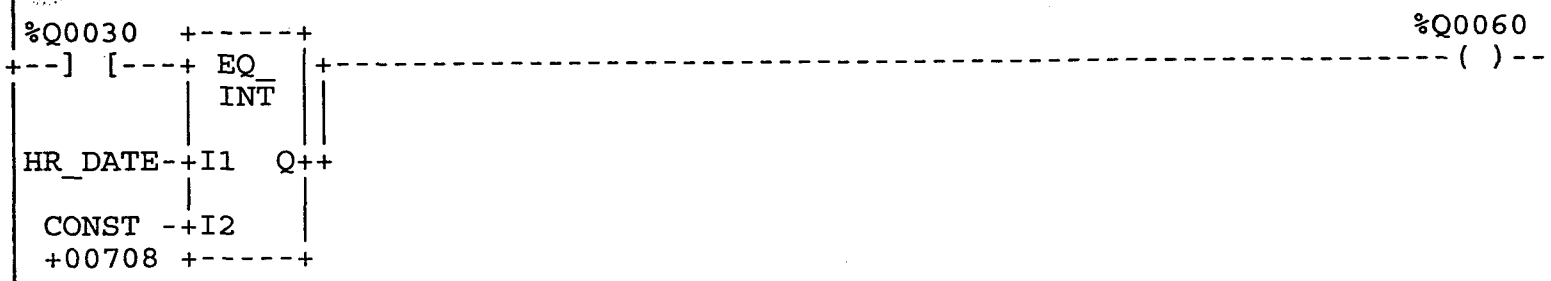

<< RUNG 183 STEP #0728 >>

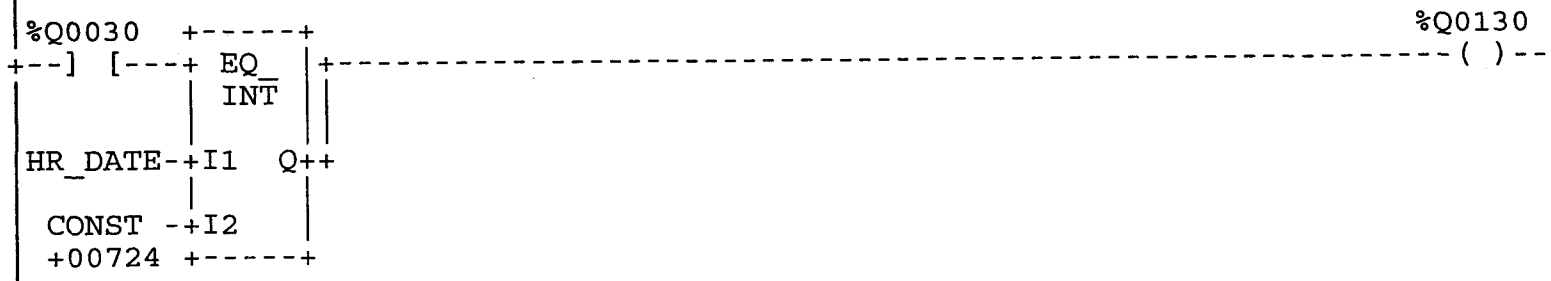

<< RUNG 184 STEP #0731 >>

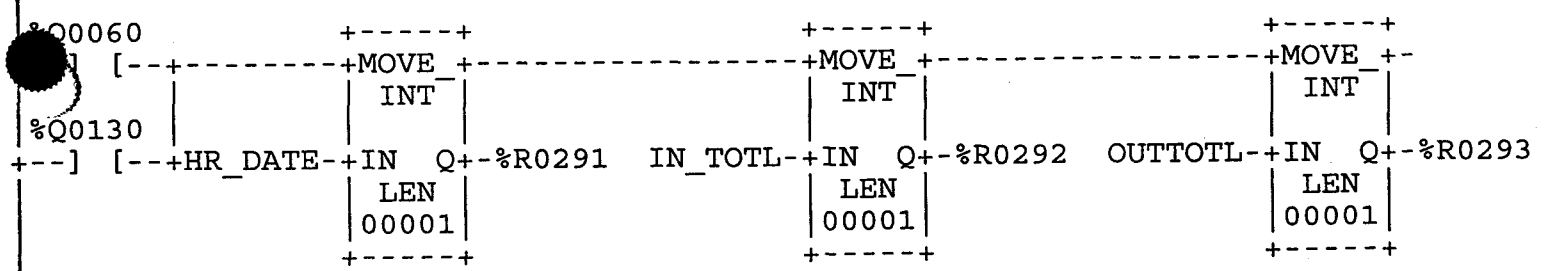

<< RUNG 185 STEP #0736 >>

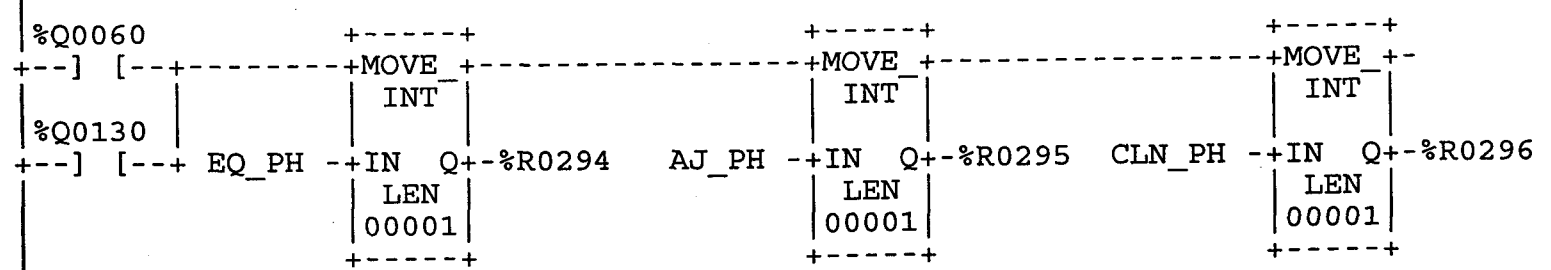

<< RUNG 186 STEP #0741 >>

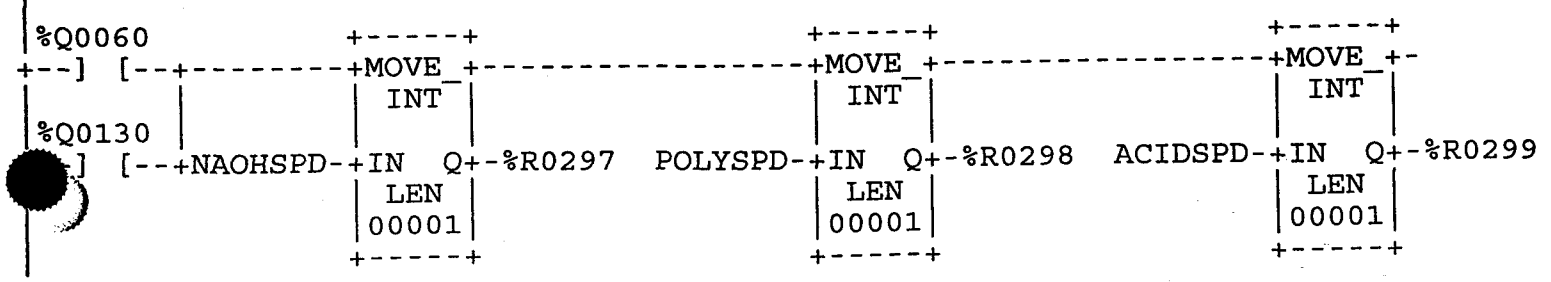

<< RUNG 187 STEP #0746 >>

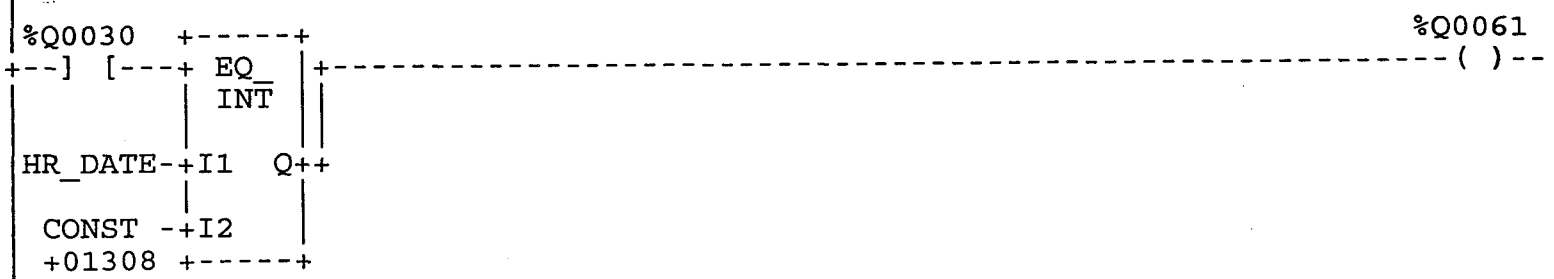

<< RUNG 188 STEP #0749 >>

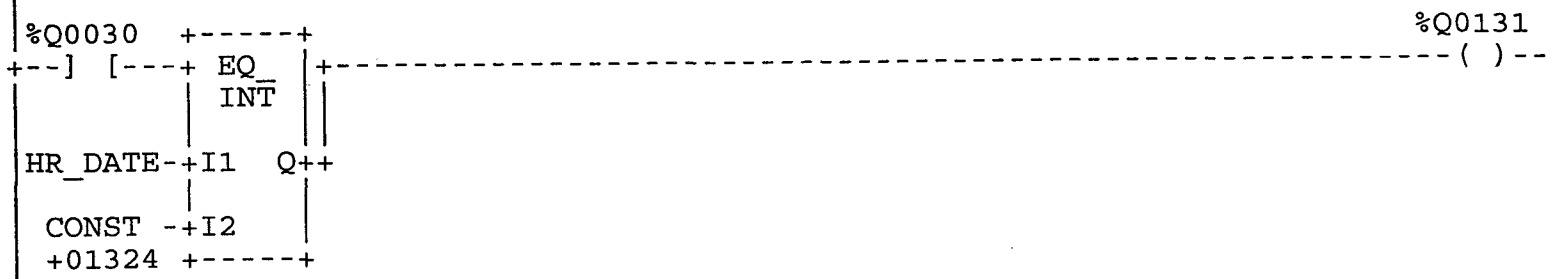

<< RUNG 189 STEP #0752 >>

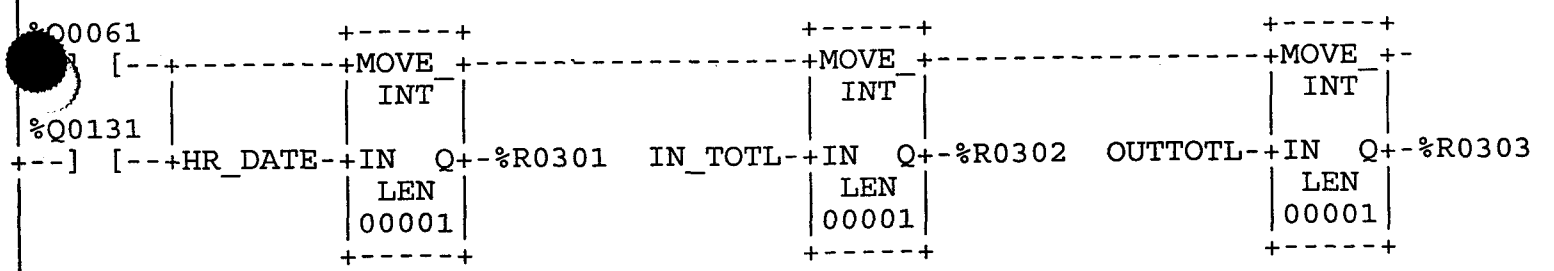

<< RUNG 190 STEP #0757 >>

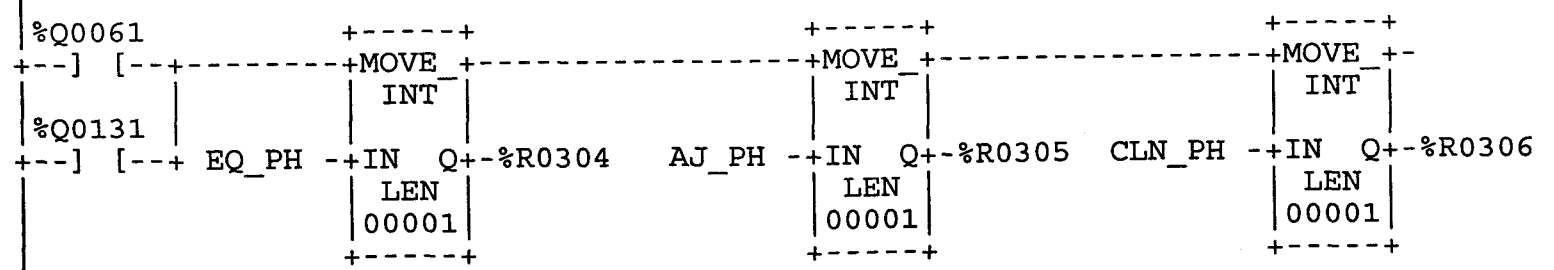

<< RUNG 191 STEP #0762 >>

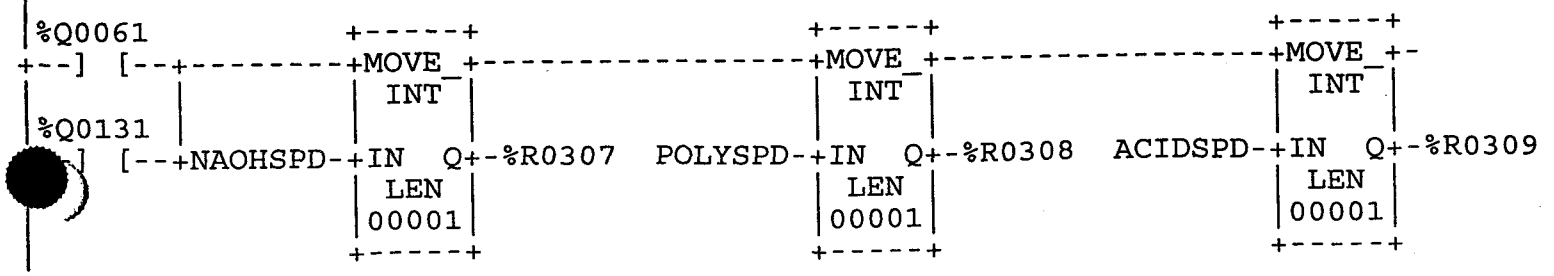

<< RUNG 192 STEP #0767 >>

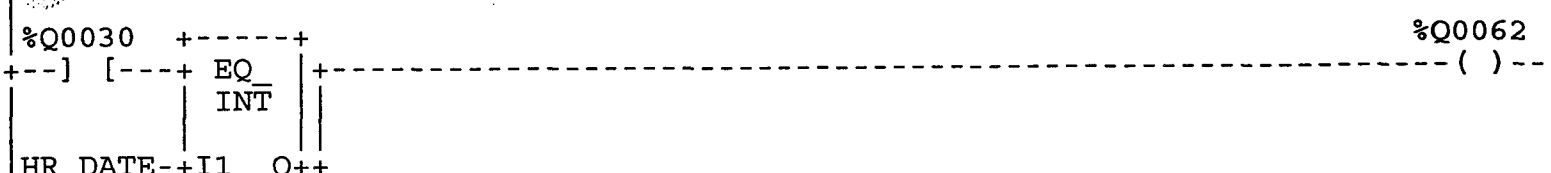

<< RUNG 193 STEP #0770 >>

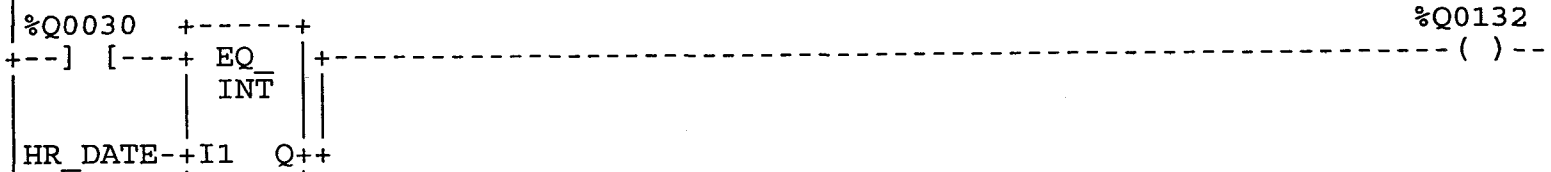

<< RUNG 194 STEP #0773 >>

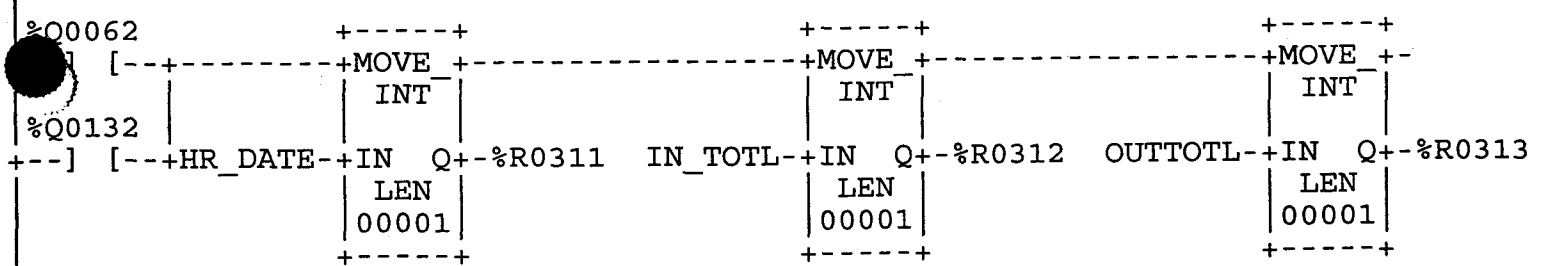

<< RUNG 195 STEP #0778 >>

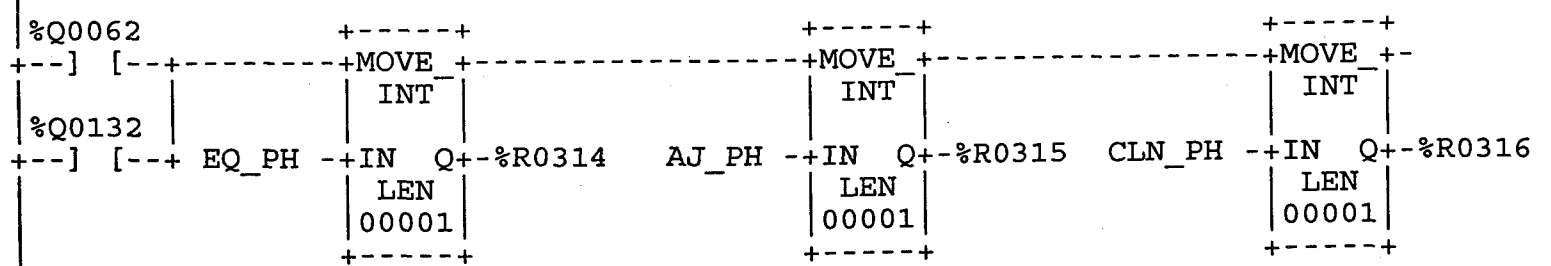

<< RUNG 196 STEP #0783 >>

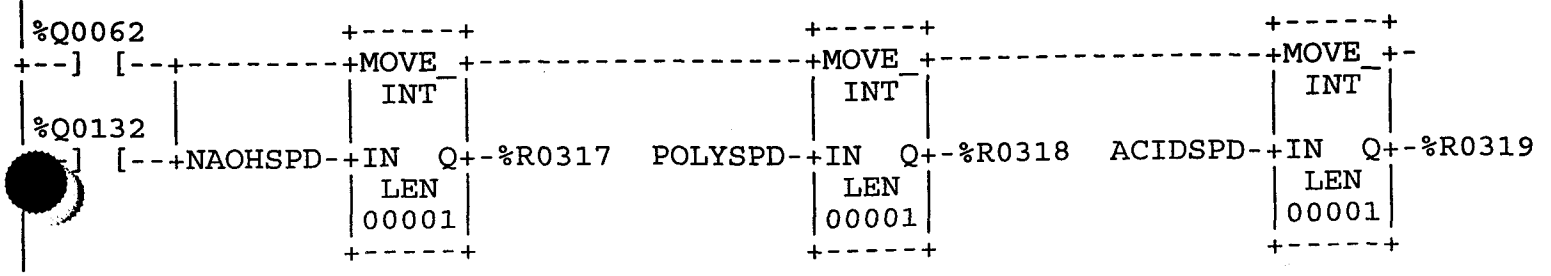

<< RUNG 197 STEP #0788 >>

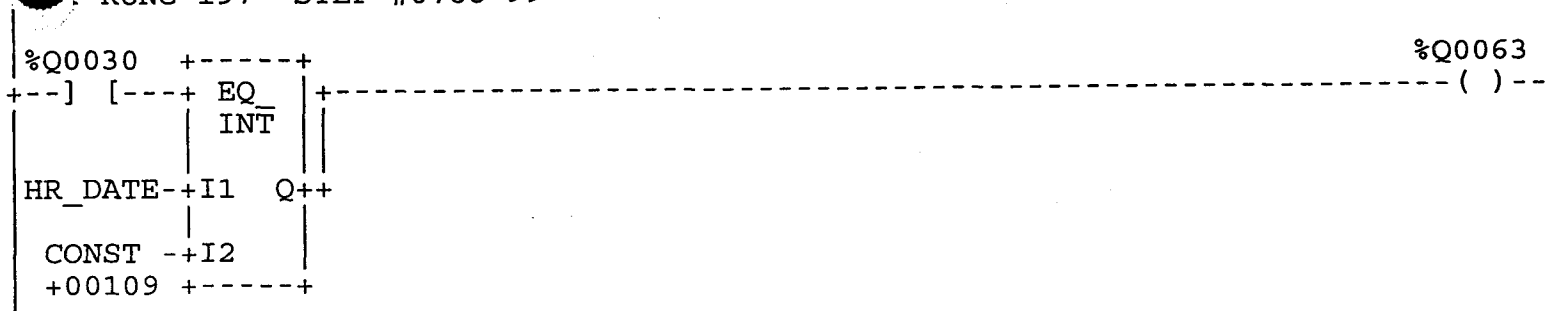

<< RUNG 198 STEP #0791 >>

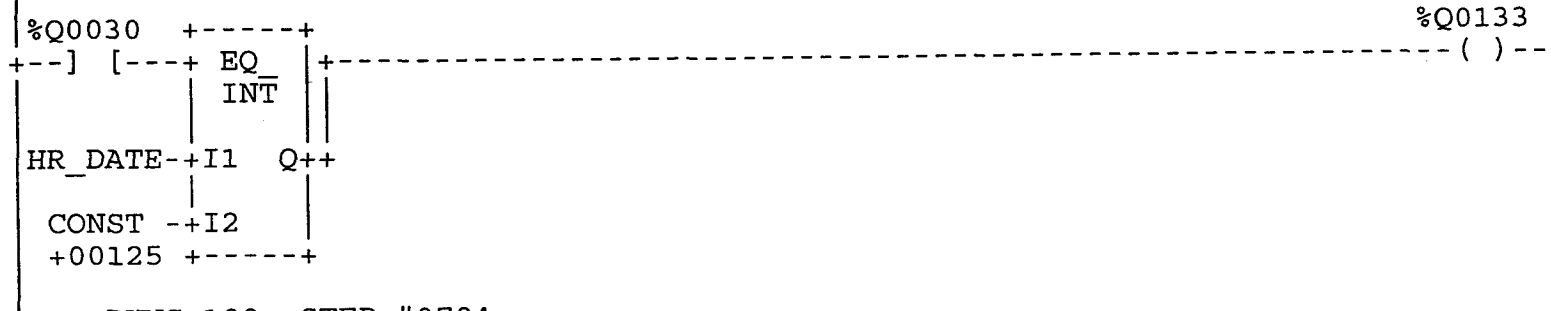

<< RUNG 199 STEP #0794 >>

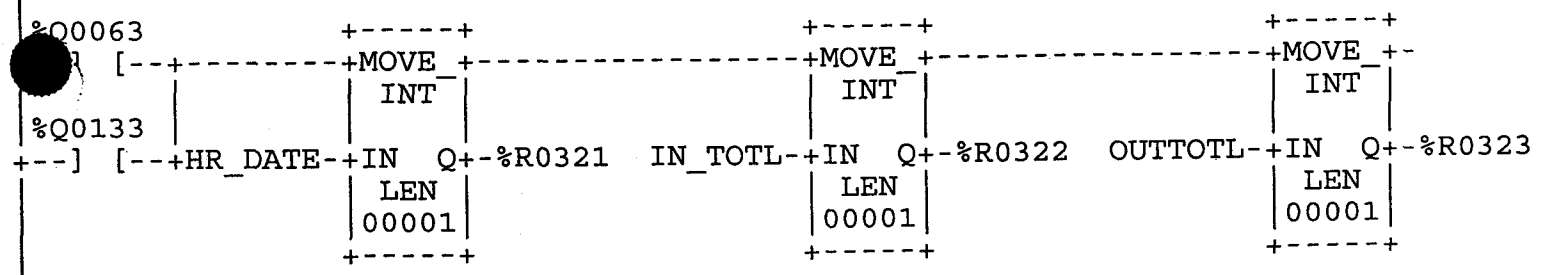

<< RUNG 200 STEP #0799 >>

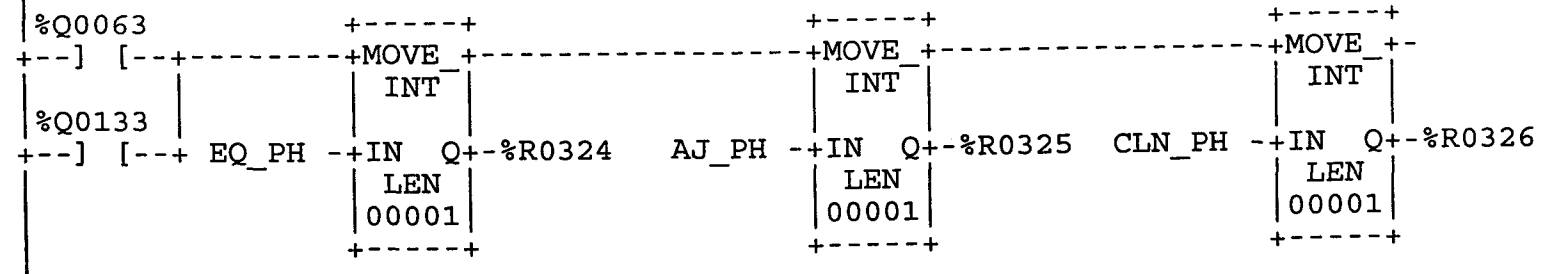

<< RUNG 201 STEP #0804 >>

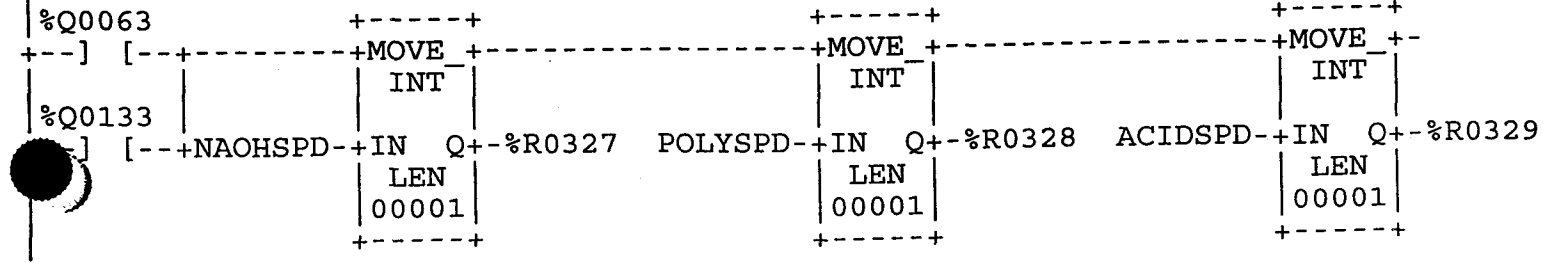

<< RUNG 202 STEP #0809 >>

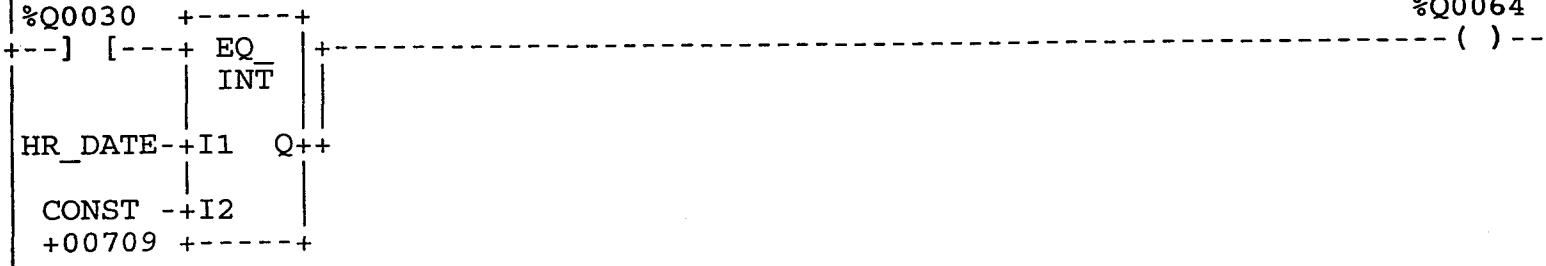

<< RUNG 203 STEP #0812 >>

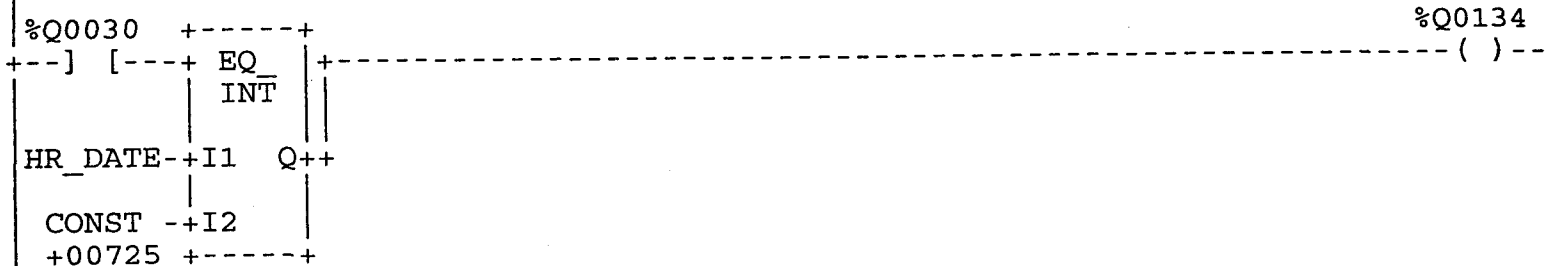

<< RUNG 204 STEP #0815 >>

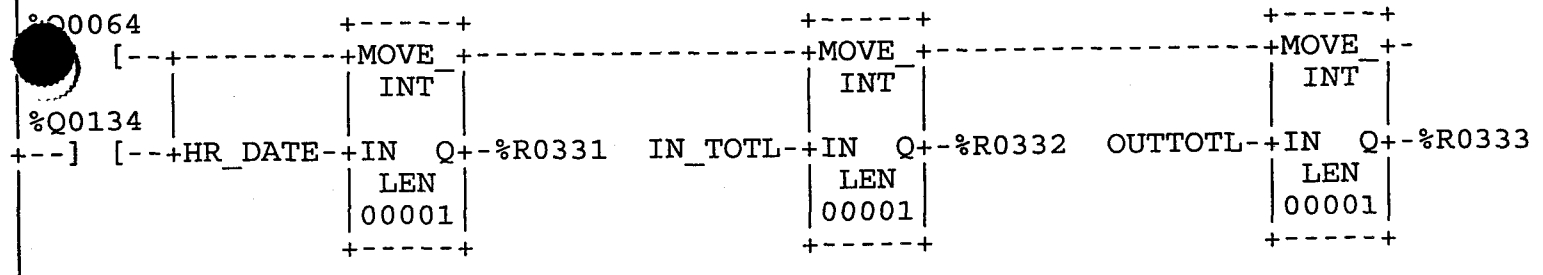

<< RUNG 205 STEP #0820 >>

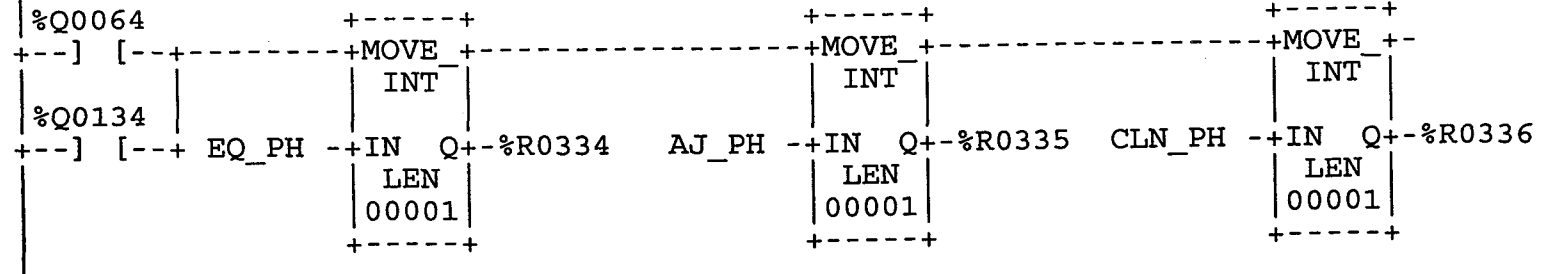

<< RUNG 206 STEP #0825 >>

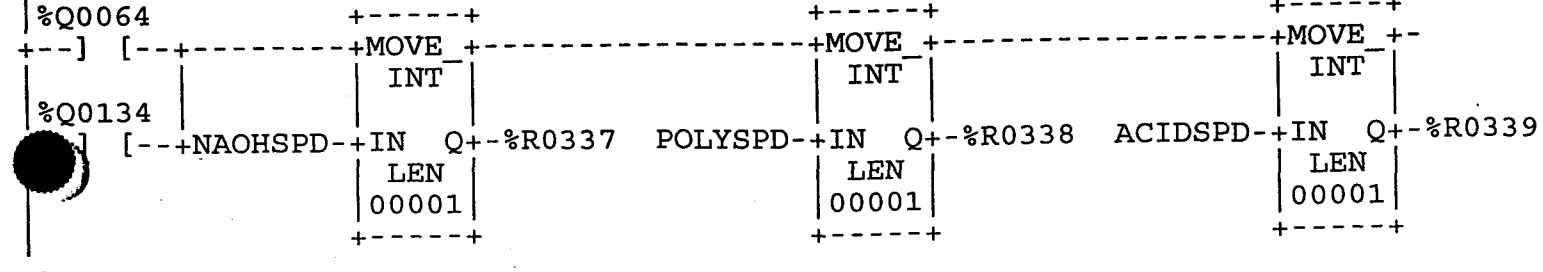

<< RUNG 207 STEP #0830 >>

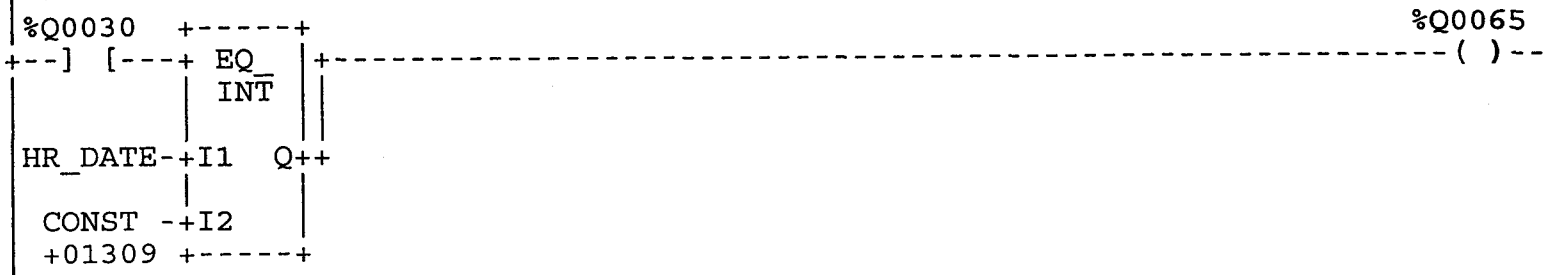

<< RUNG 208 STEP #0833 >>

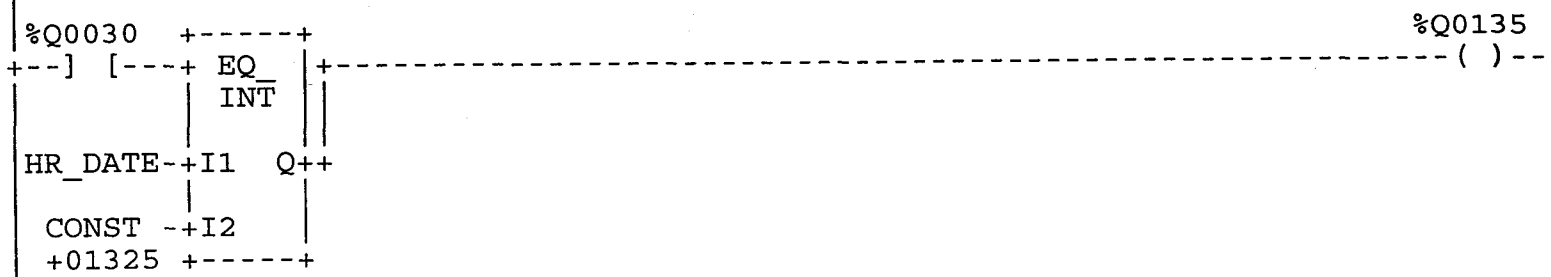

<< RUNG 209 STEP #0836 >>

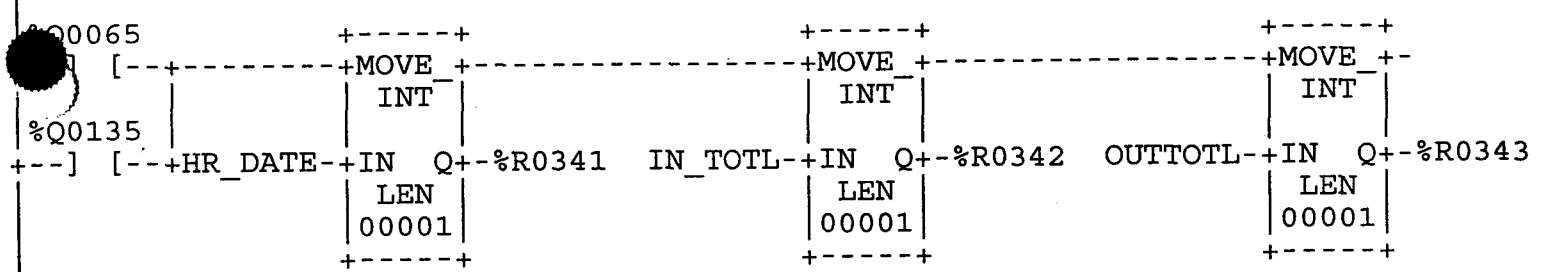

<< RUNG 210 STEP #0841 >>

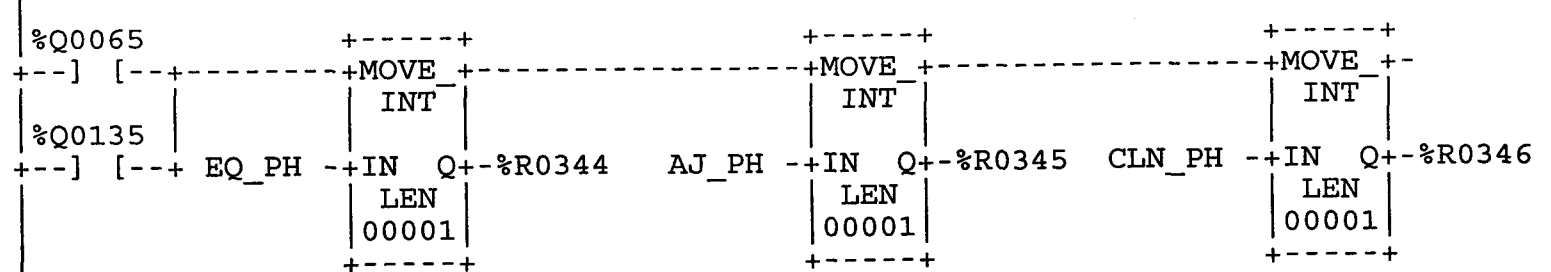

<< RUNG 211 STEP #0846 >>

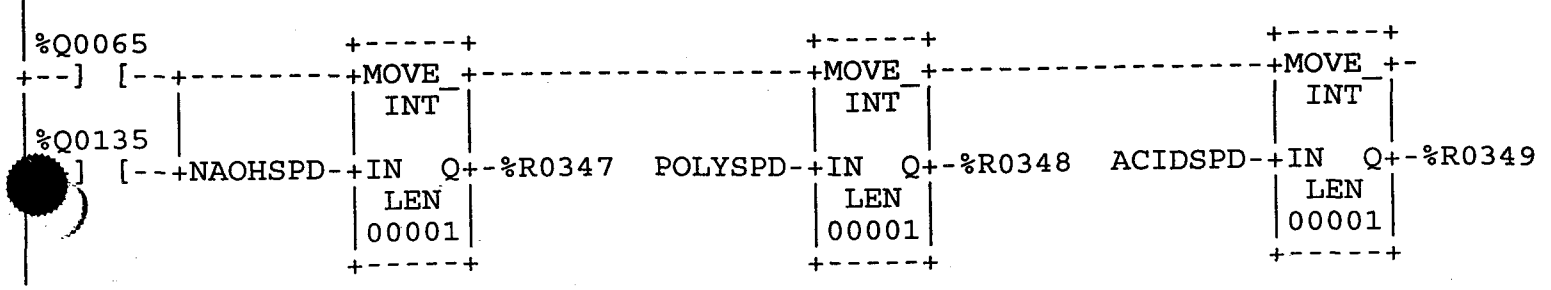

<< RUNG 212 STEP #0851 >>

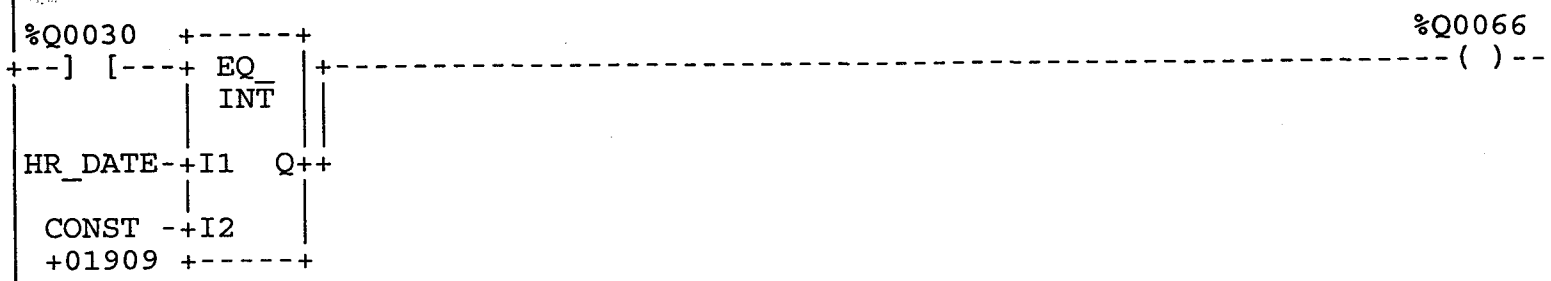

<< RUNG 213 STEP #0854 >>

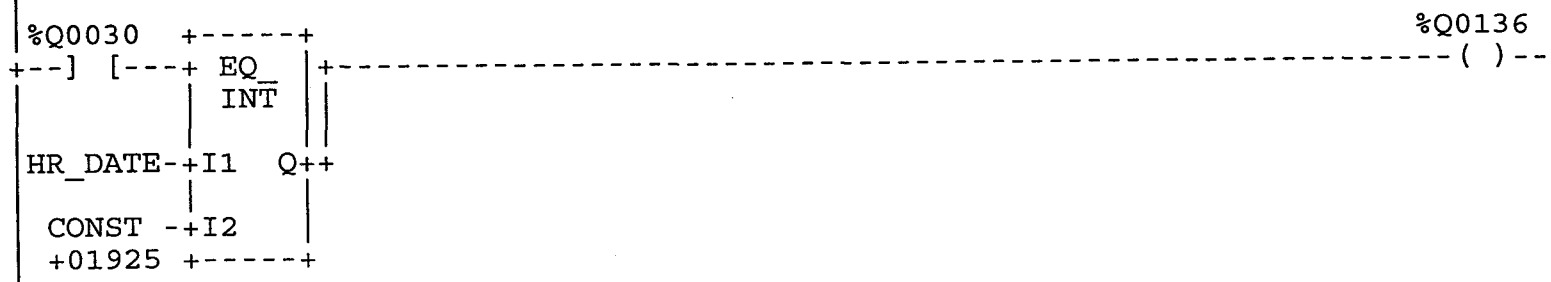

<< RUNG 214 STEP #0857 >>

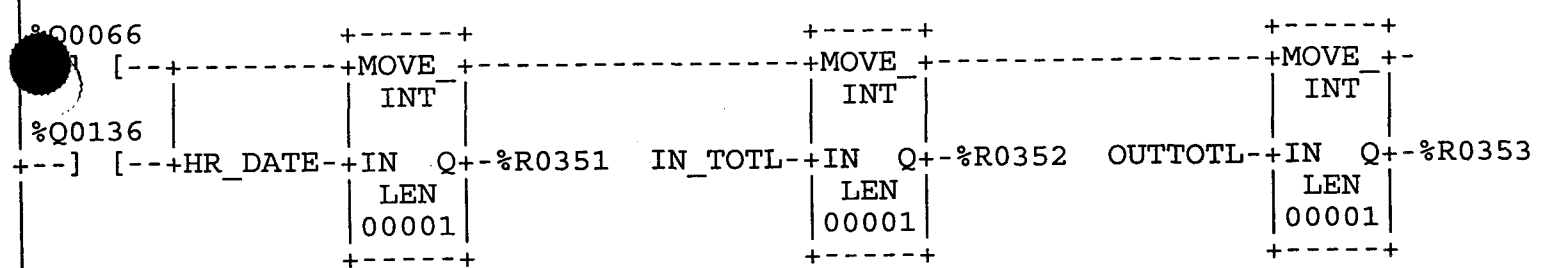

<< RUNG 215 STEP #0862 >>

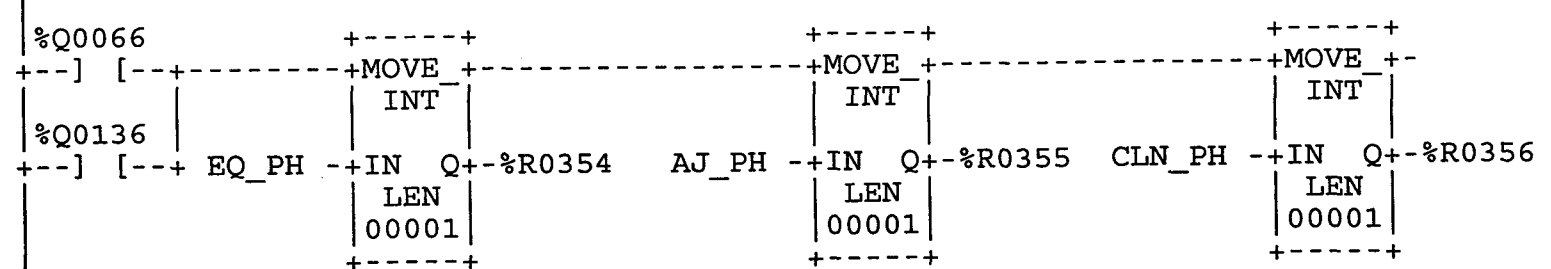

<< RUNG 216 STEP #0867 >>

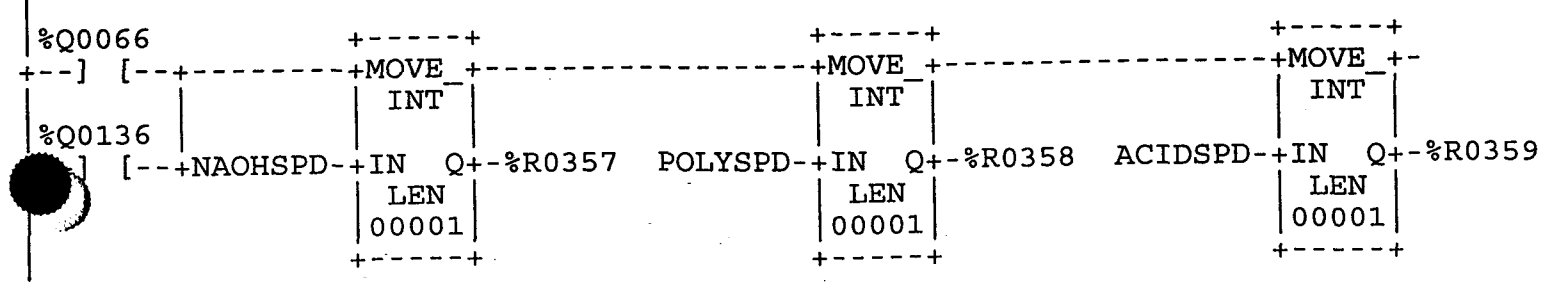

<< RUNG 217 STEP #0872 >>

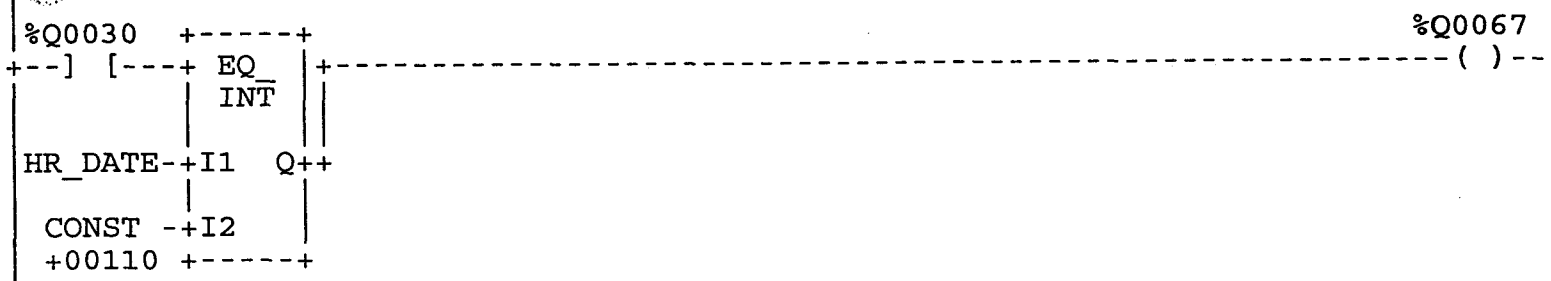

<< RUNG 218 STEP #0875 >>

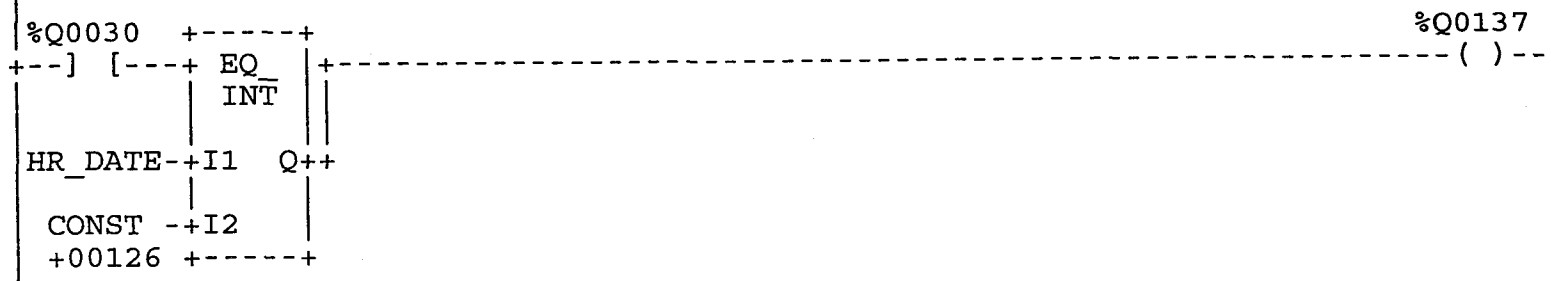

<< RUNG 219 STEP #0878 >>

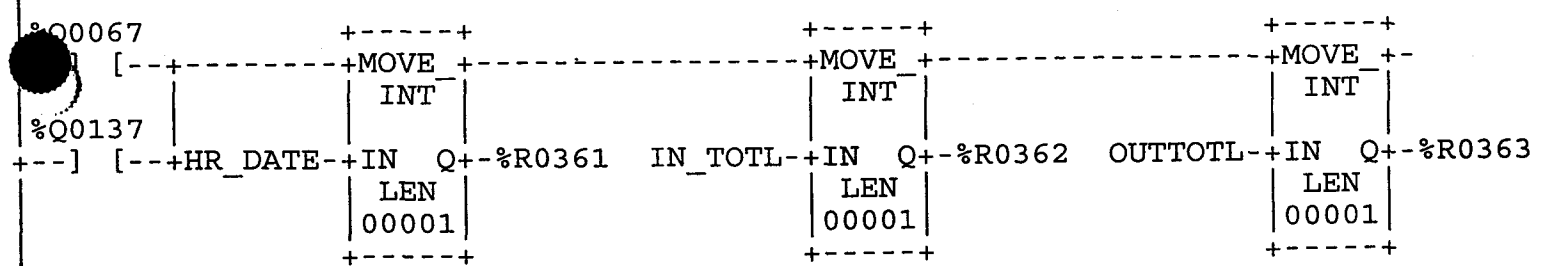

<< RUNG 220 STEP #0883 >>

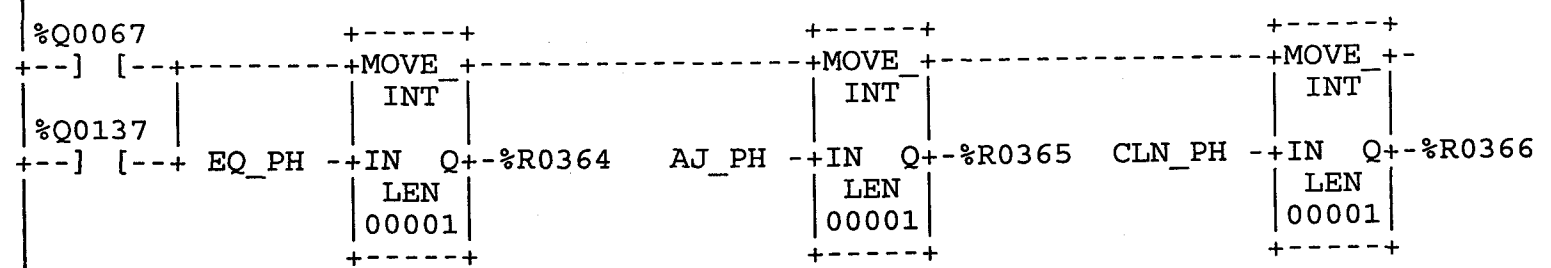

<< RUNG 221 STEP #0888 >>

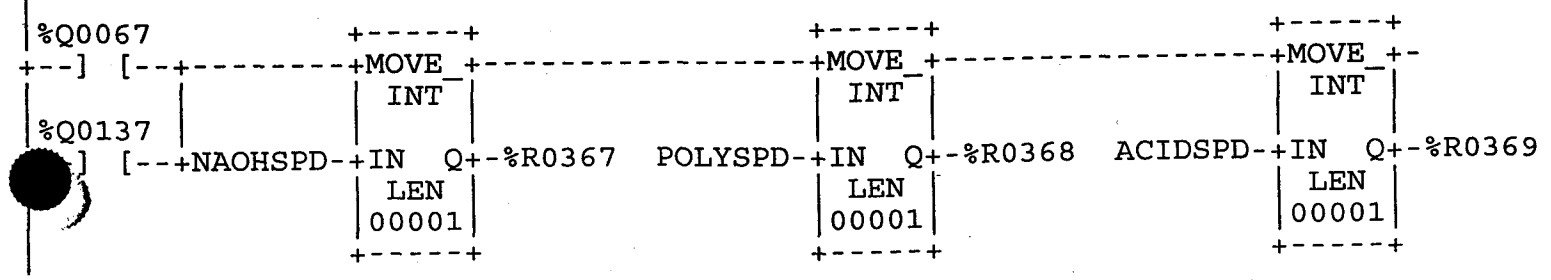

<< RUNG 222 STEP #0893 >>

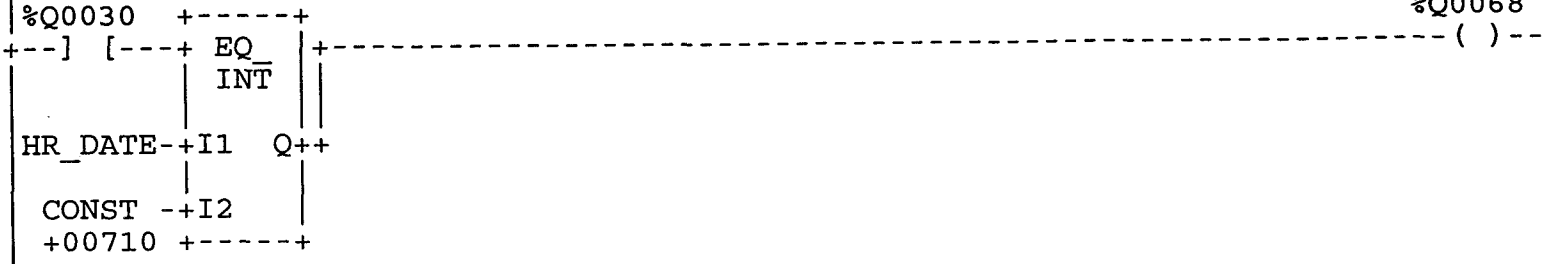

<< RUNG 223 STEP #0896 >>

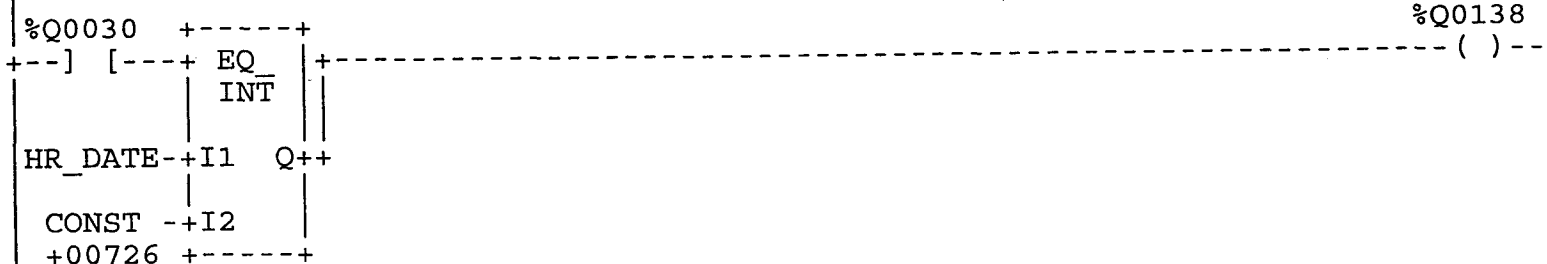

<< RUNG 224 STEP #0899 >>

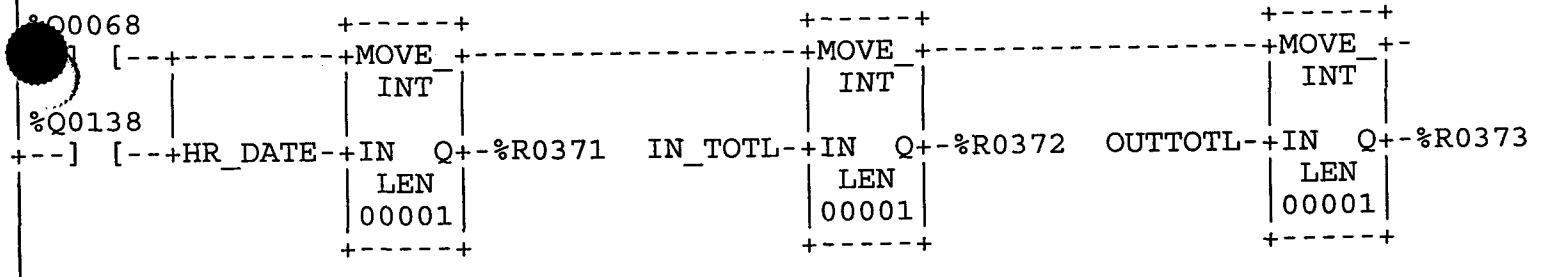

<< RUNG 225 STEP #0904 >>

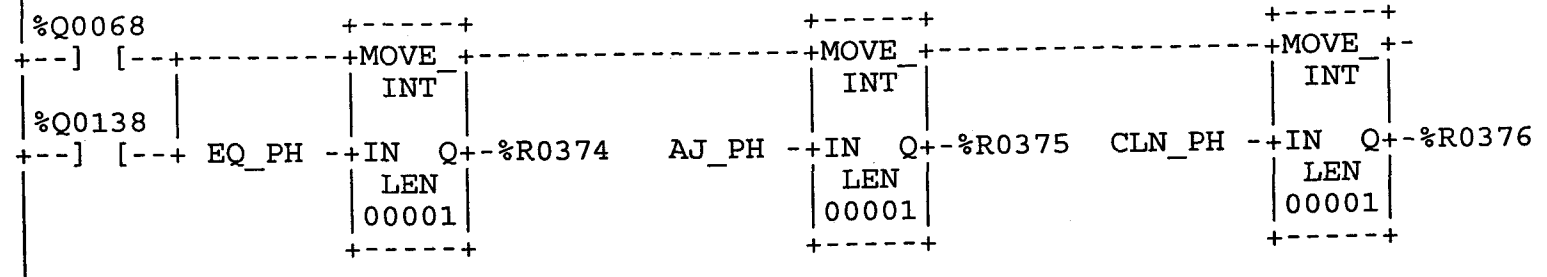

<< RUNG 226 STEP #0909 >>

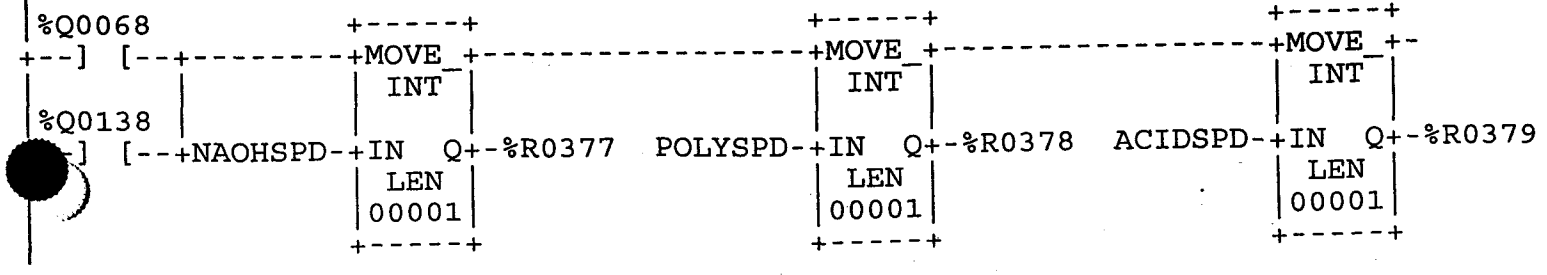

<< RUNG 227 STEP #0914 >>

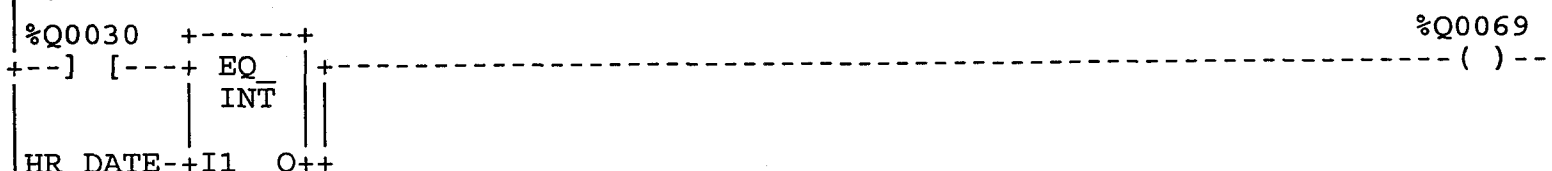

<< RUNG 228 STEP #0917 >>

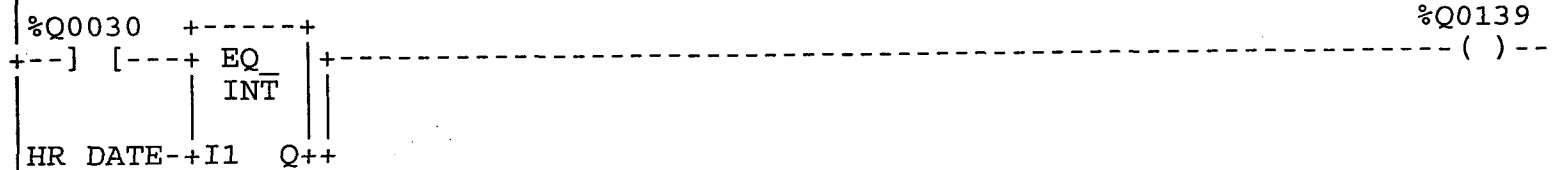

<< RUNG 229 STEP #0920 >>

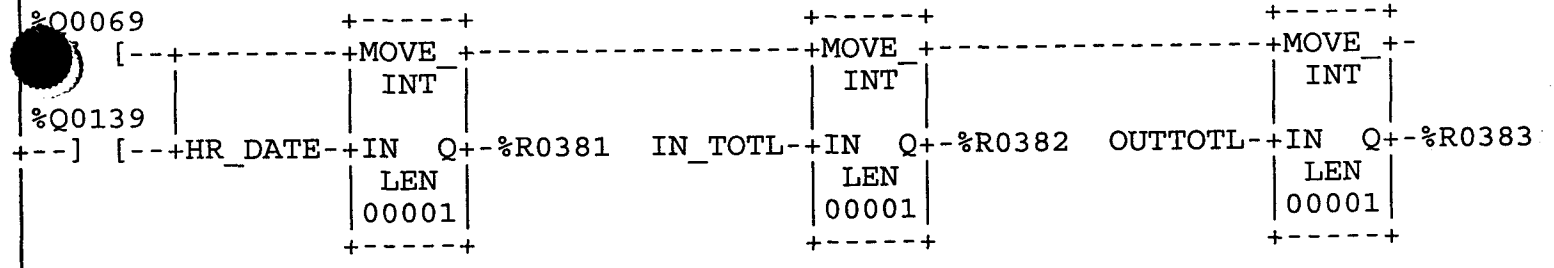

<< RUNG 230 STEP #0925 >>

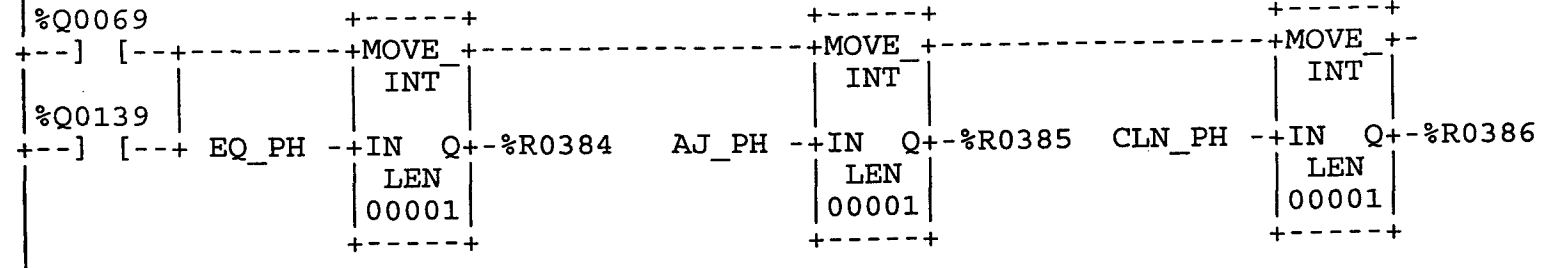

<< RUNG 231 STEP #0930 >>

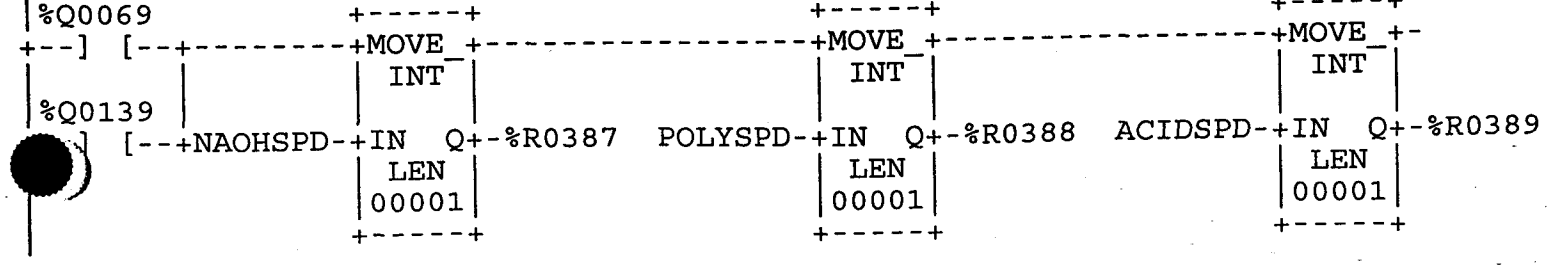

<< RUNG 232 STEP #0935 >>

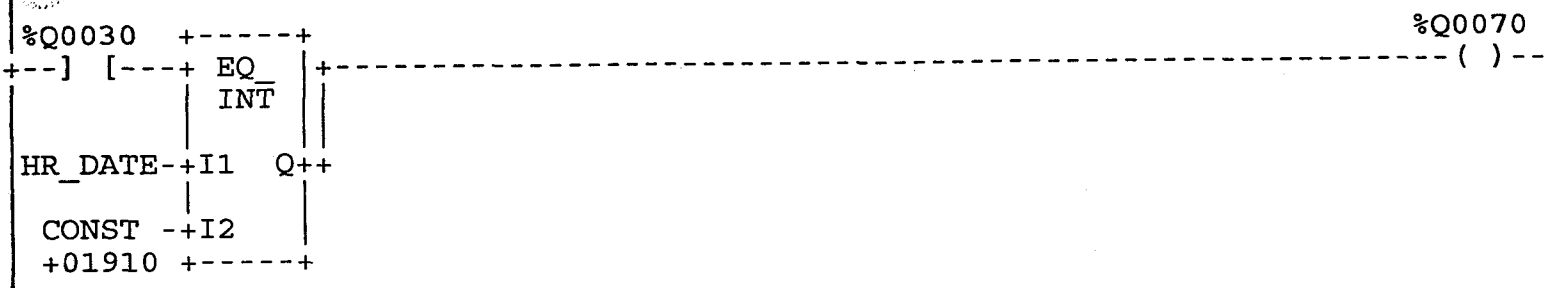

<< RUNG 233 STEP #0938 >>

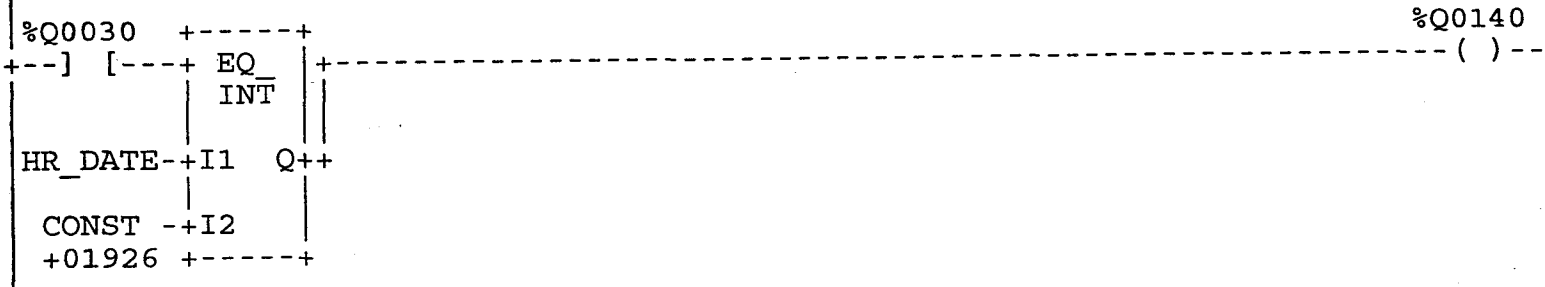

<< RUNG 234 STEP #0941 >>

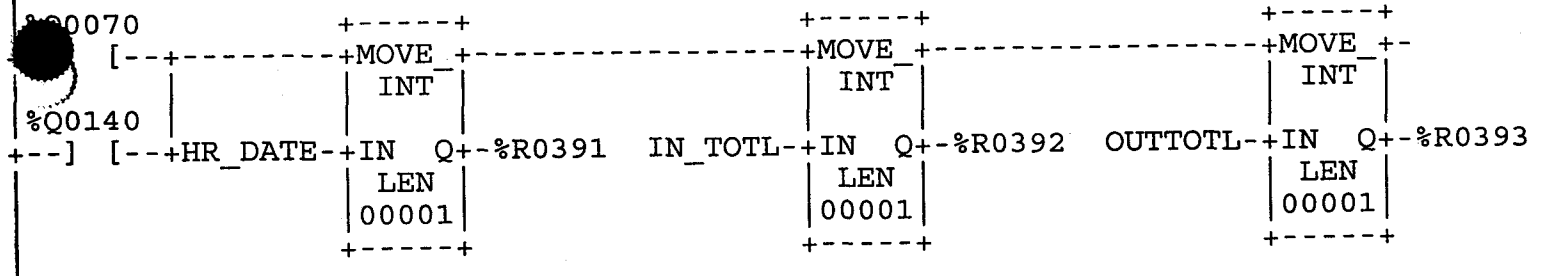

<< RUNG 235 STEP #0946 >>

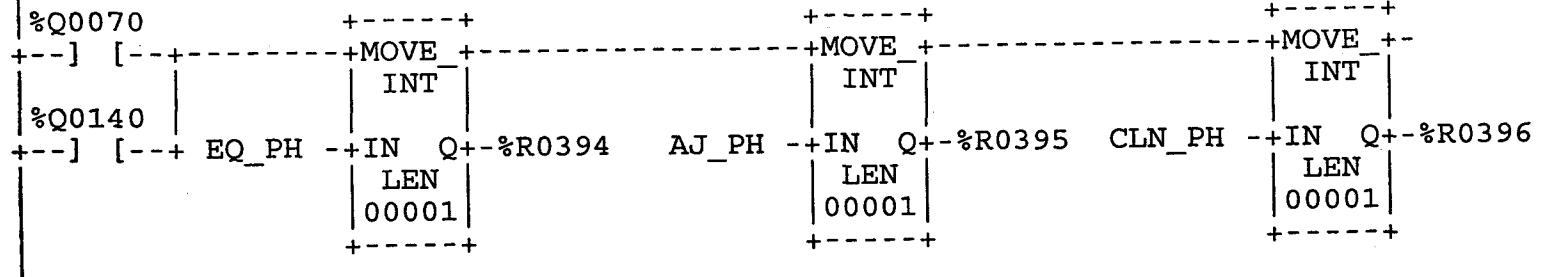

<< RUNG 236 STEP #0951 >>

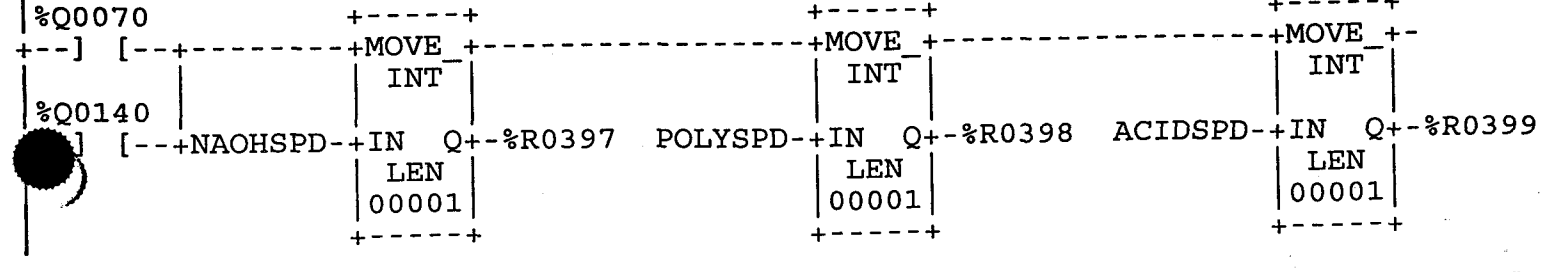

<< RUNG 237 STEP #0956 >>

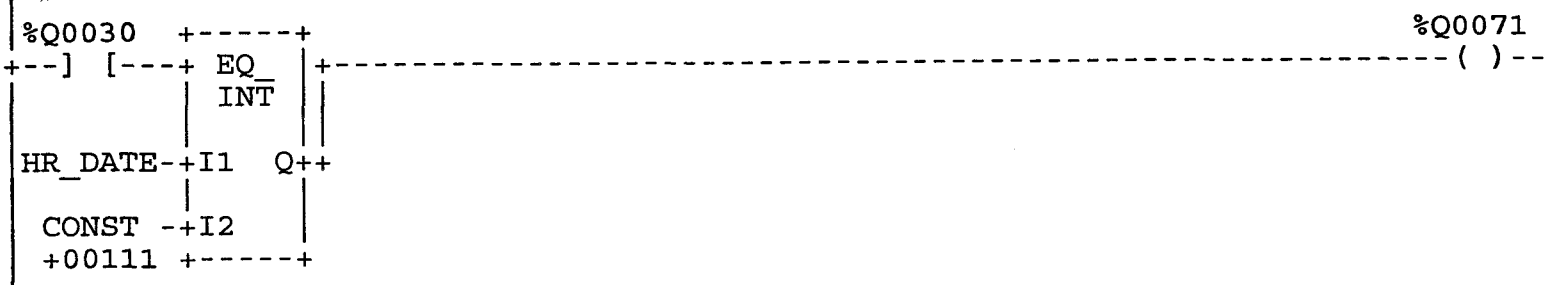

<< RUNG 238 STEP #0959 >>

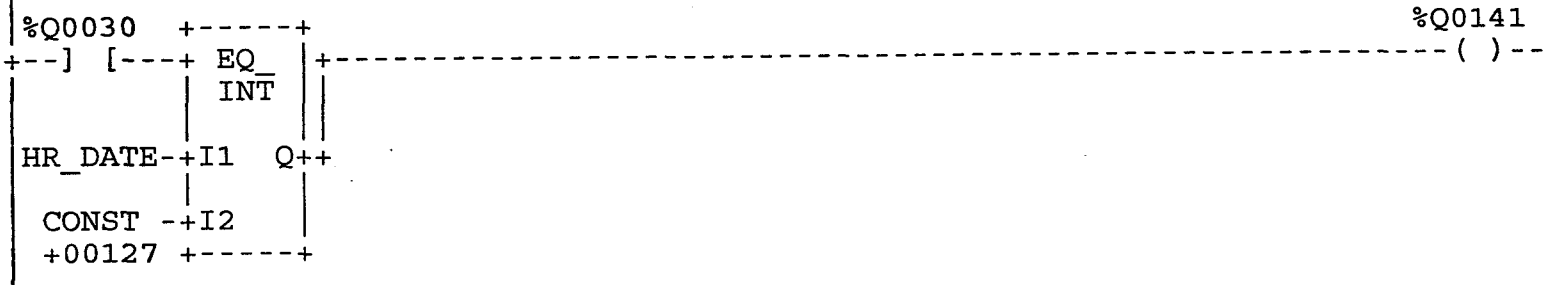

<< RUNG 239 STEP #0962 >>

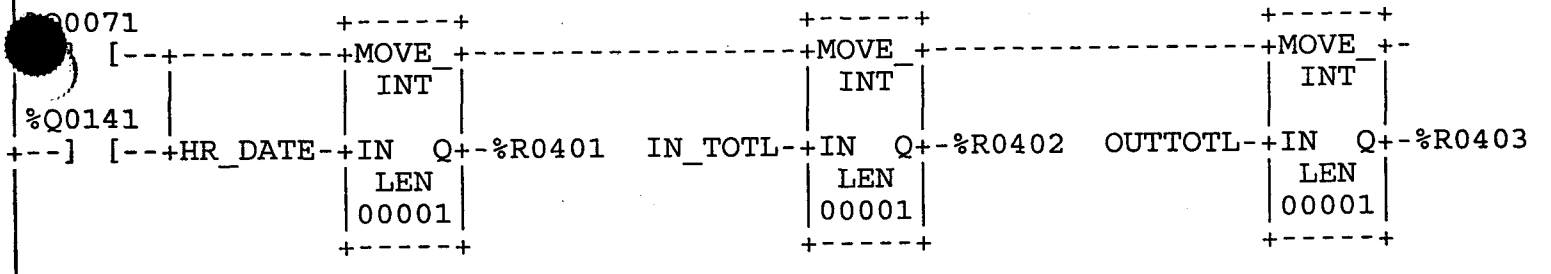

<< RUNG 240 STEP #0967 >>

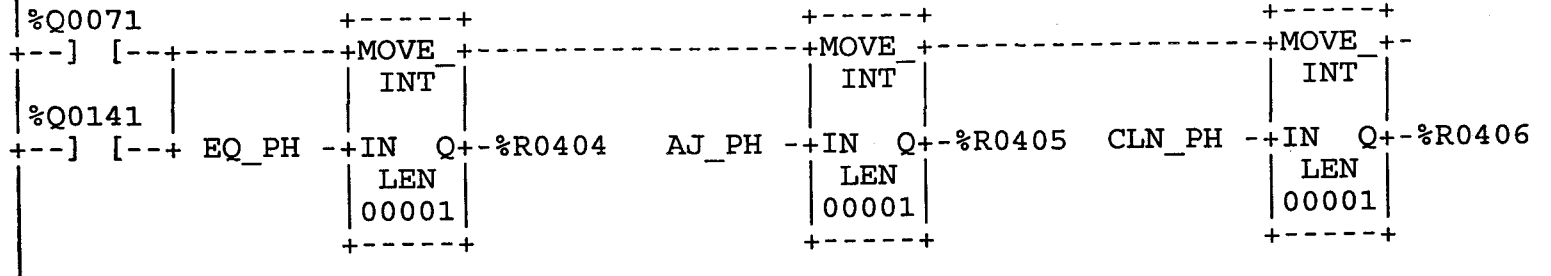

<< RUNG 241 STEP #0972 >>

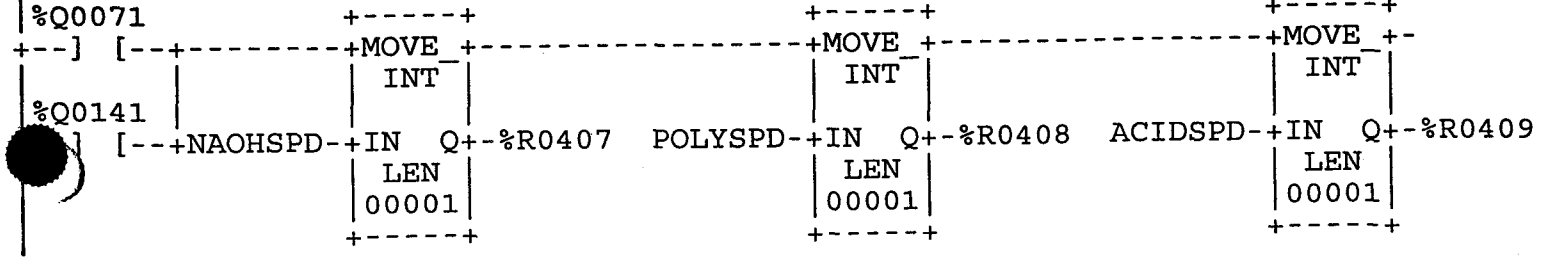

<< RUNG 242 STEP #0977 >>

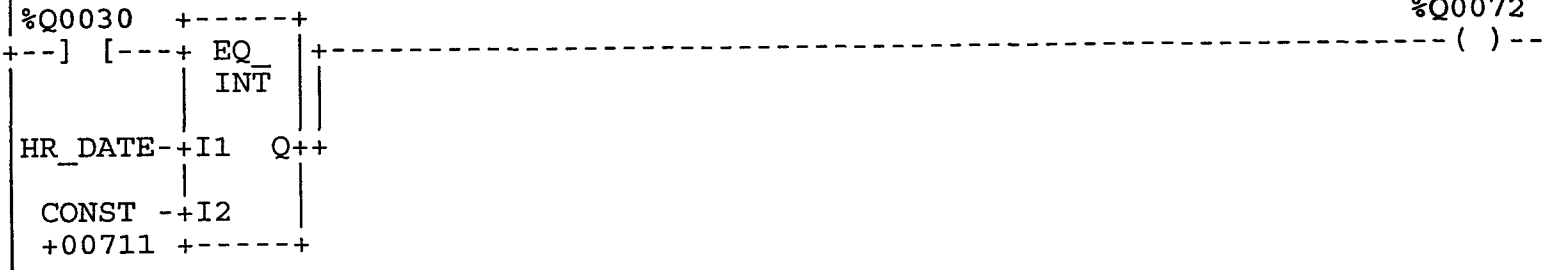

<< RUNG 243 STEP #0980 >>

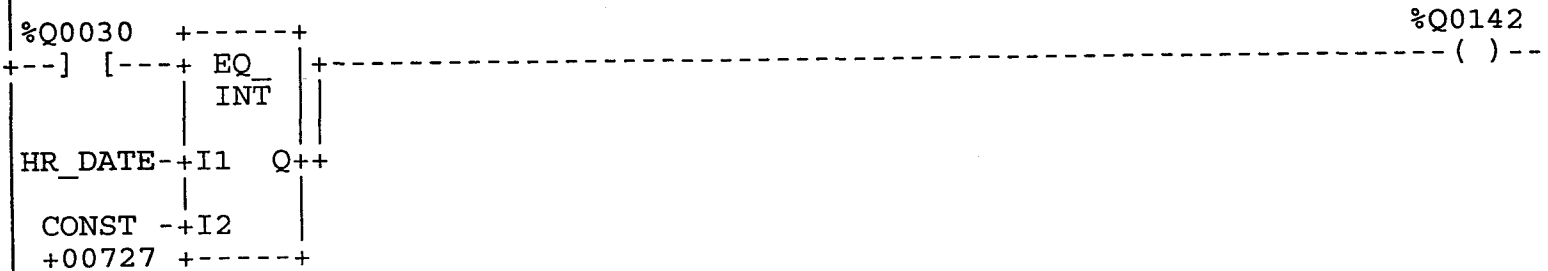

<< RUNG 244 STEP #0983 >>

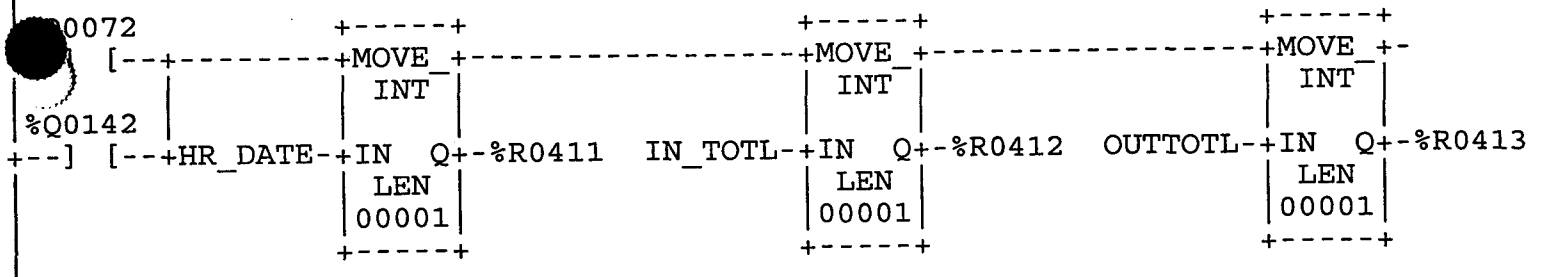

<< RUNG 245 STEP #0988 >>

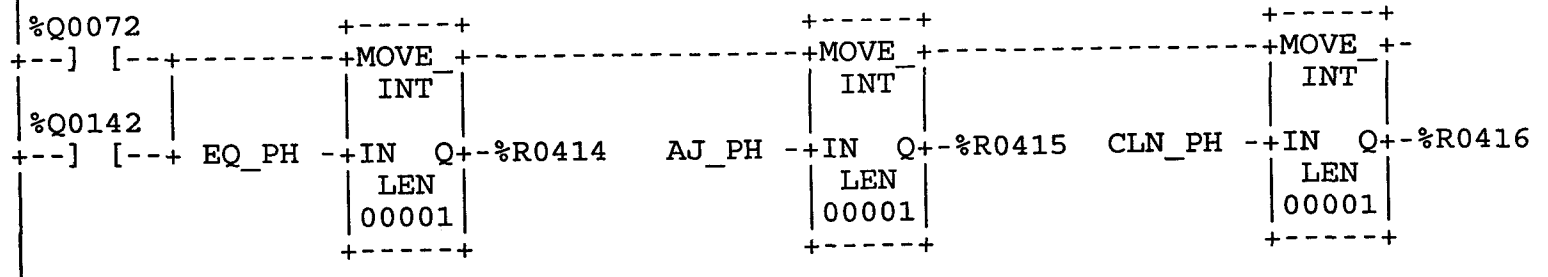

<< RUNG 246 STEP #0993 >>

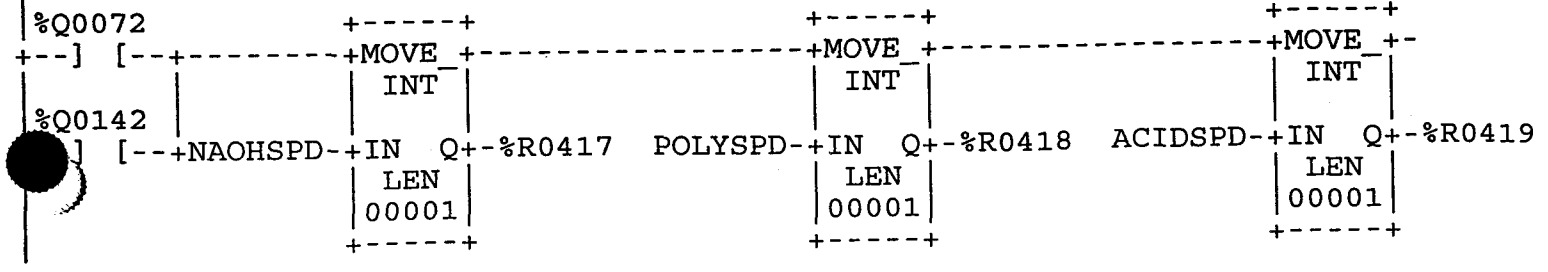

<< RUNG 247 STEP #0998 >>

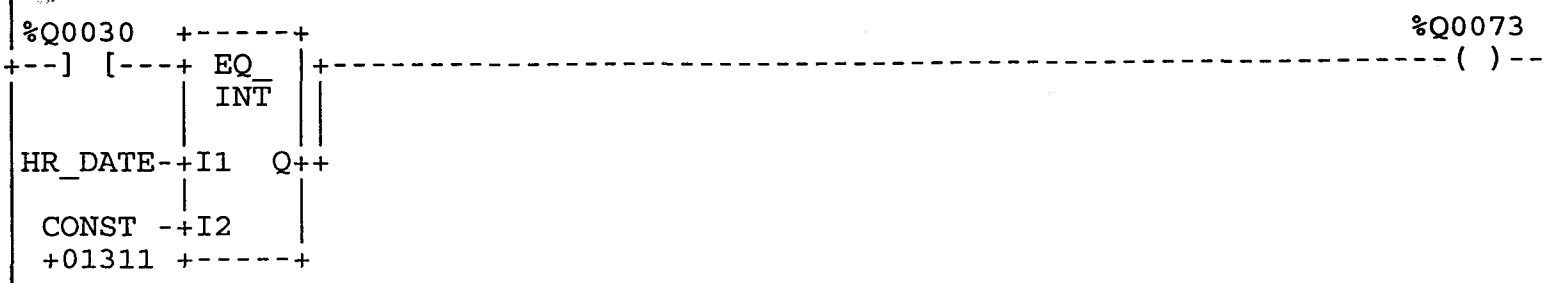

<< RUNG 248 STEP #1001 >>

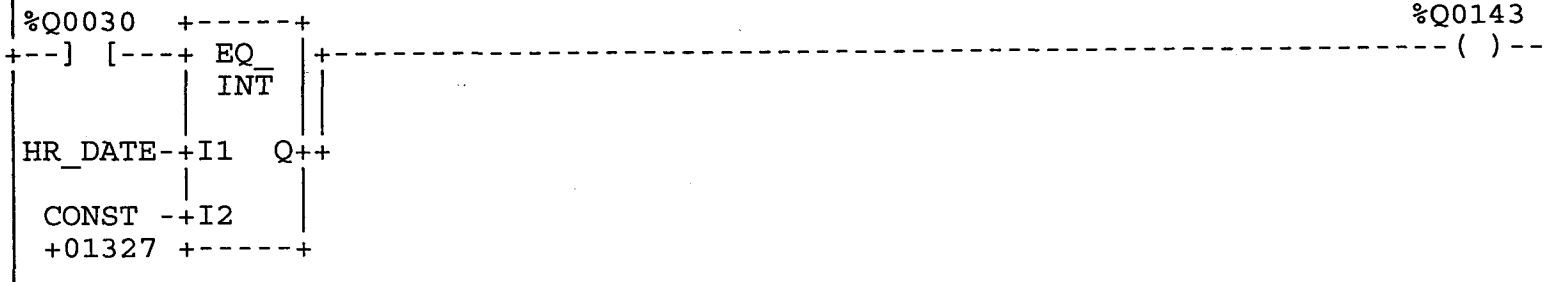

<< RUNG 249 STEP #1004 >>

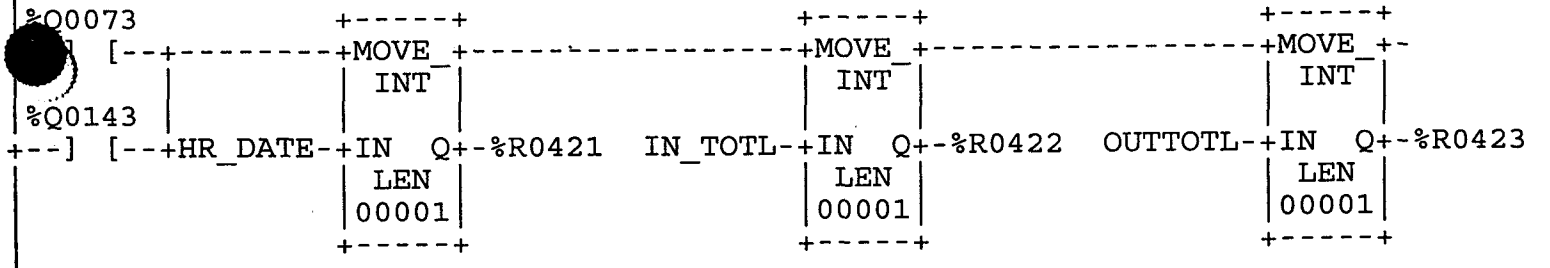

<< RUNG 250 STEP #1009 >>

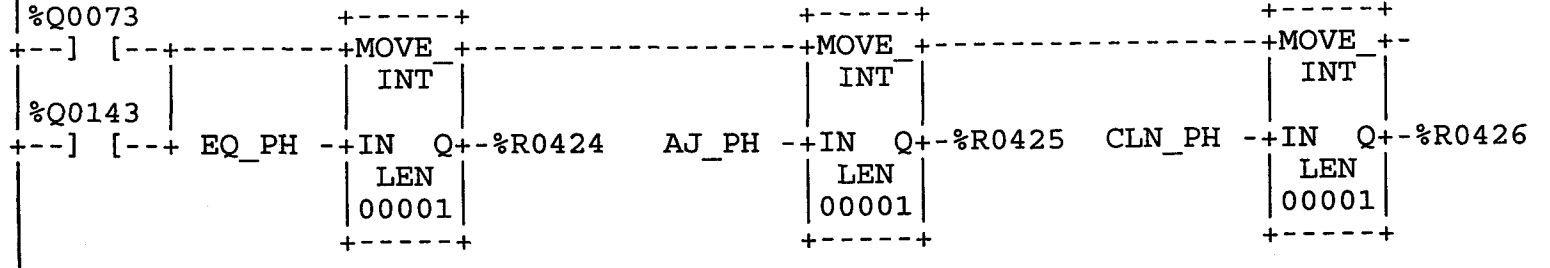

<< RUNG 251 STEP #1014 >>

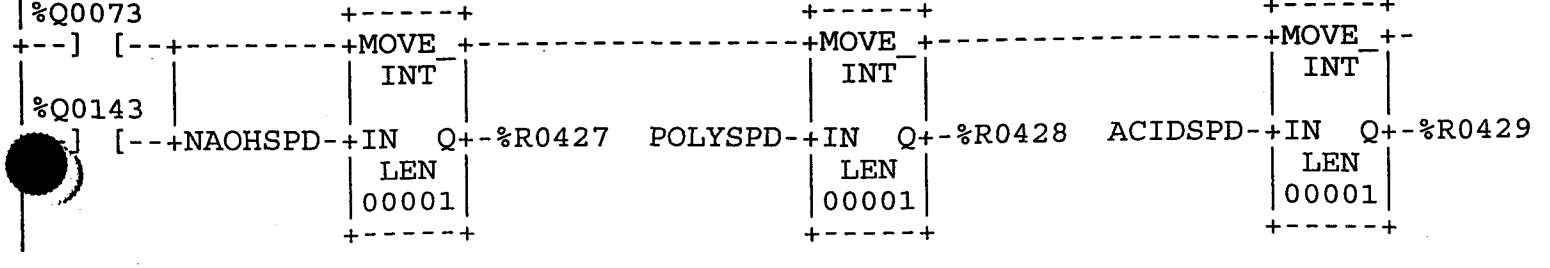

<< RUNG 252 STEP #1019 >>

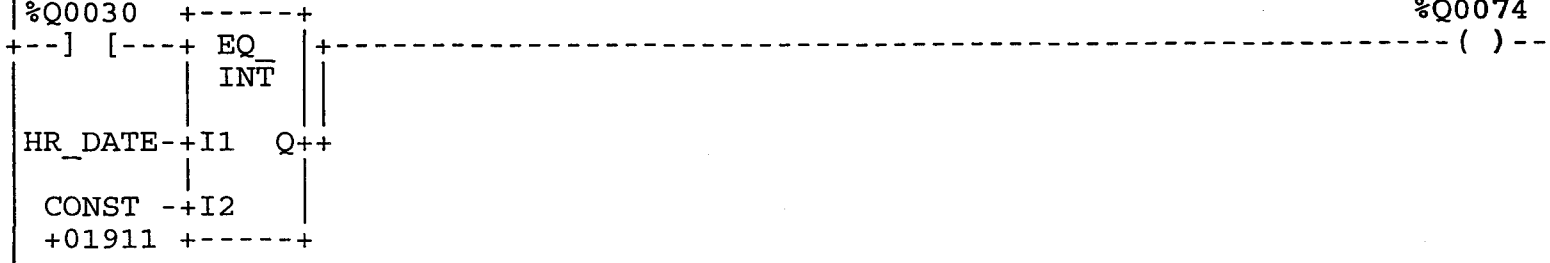

<< RUNG 253 STEP #1022 >>

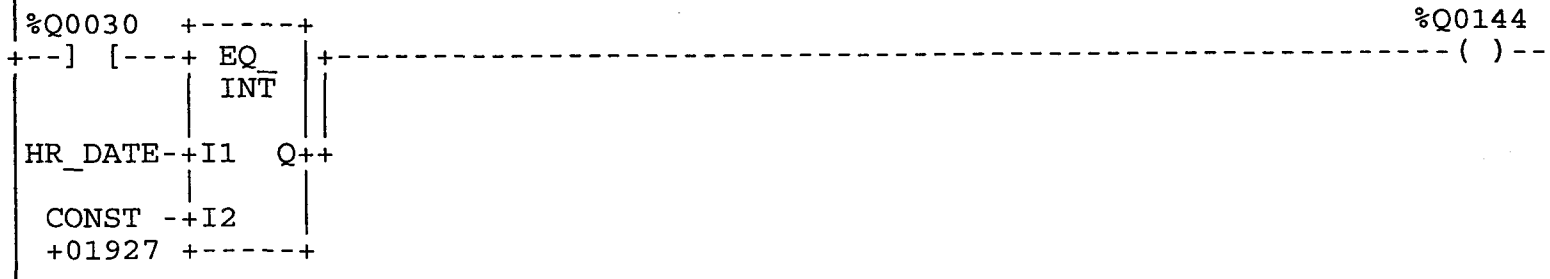

<< RUNG 254 STEP #1025 >>

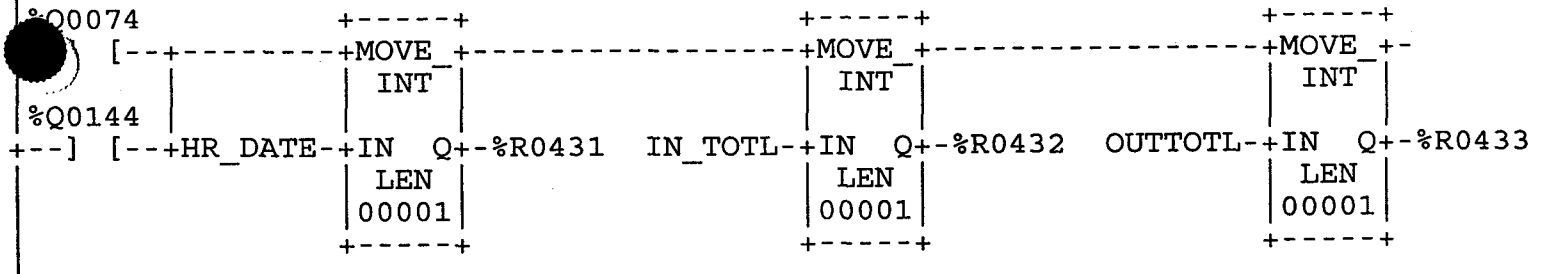

<< RUNG 255 STEP #1030 >>

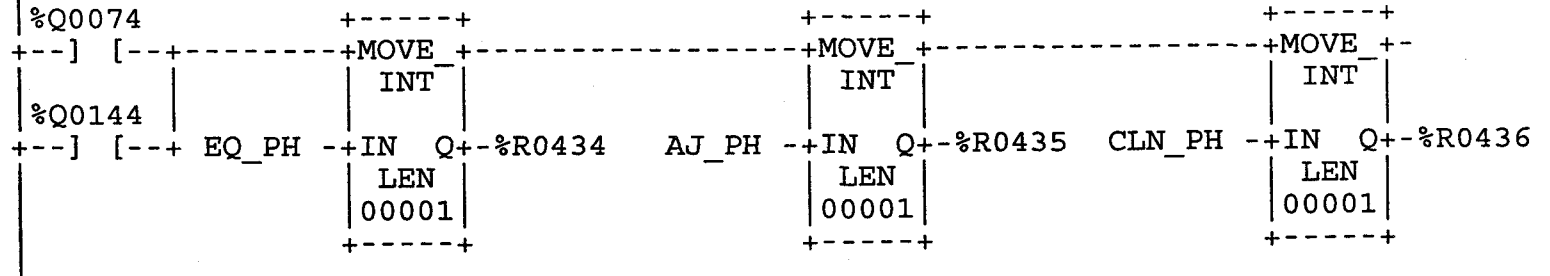

<< RUNG 256 STEP #1035 >>

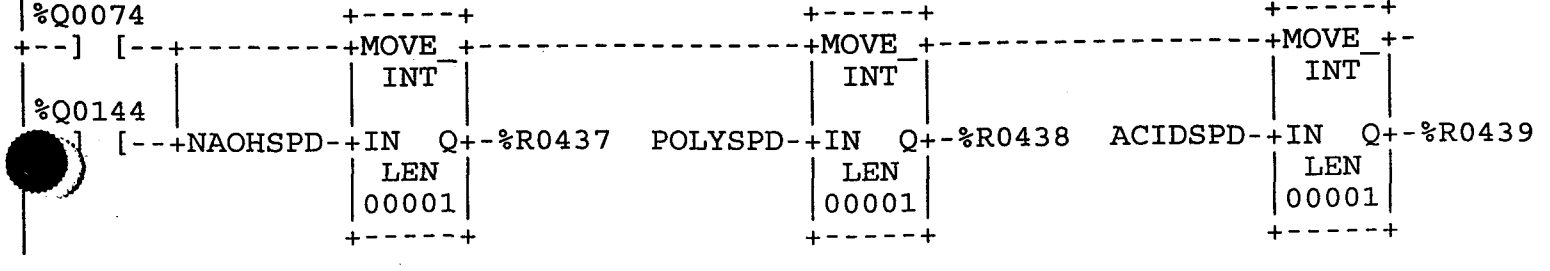

<< RUNG 257 STEP #1040 >>

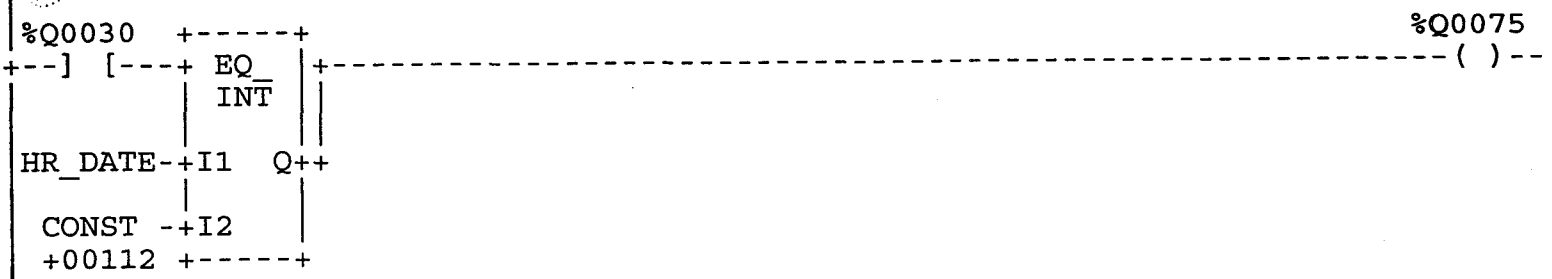

<< RUNG 258 STEP #1043 >>

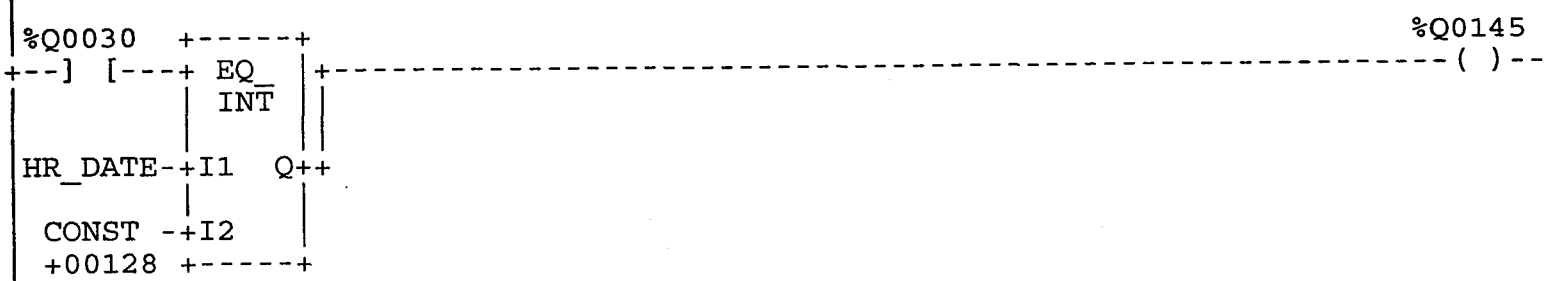

<< RUNG 259 STEP #1046 >>

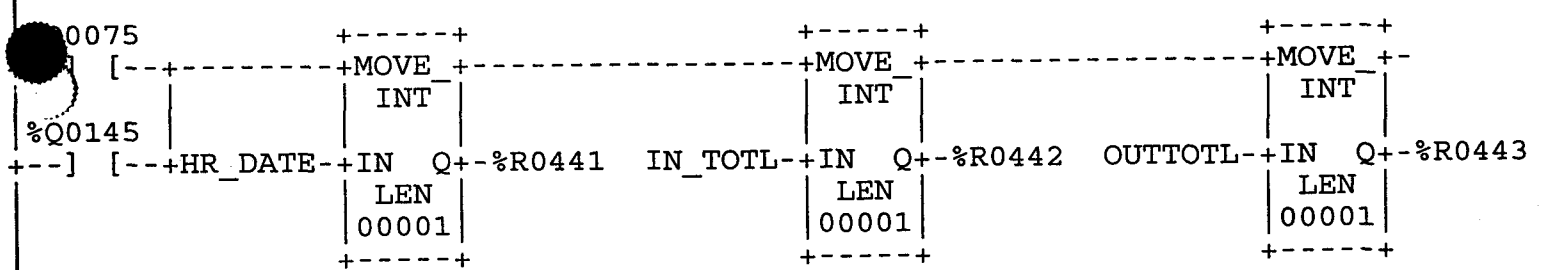

<< RUNG 260 STEP #1051 >>

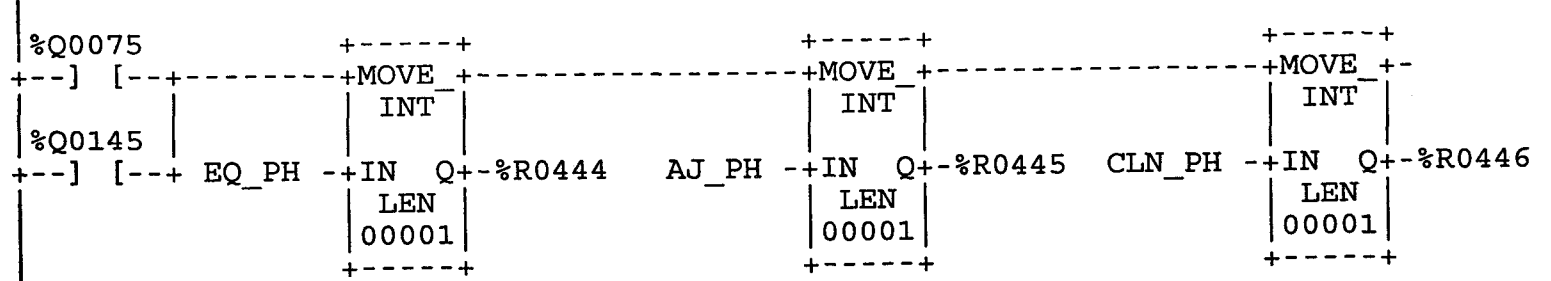

<< RUNG 261 STEP #1056 >>

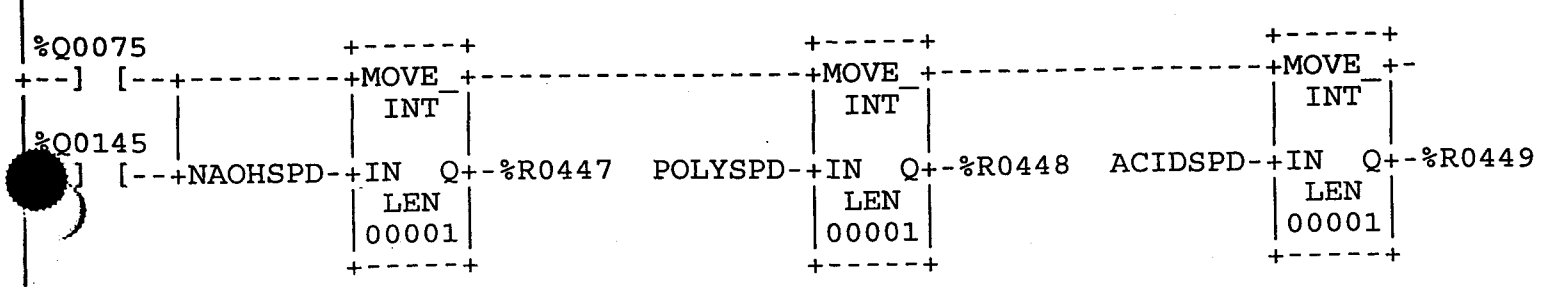

<< RUNG 262 STEP #1061 >>

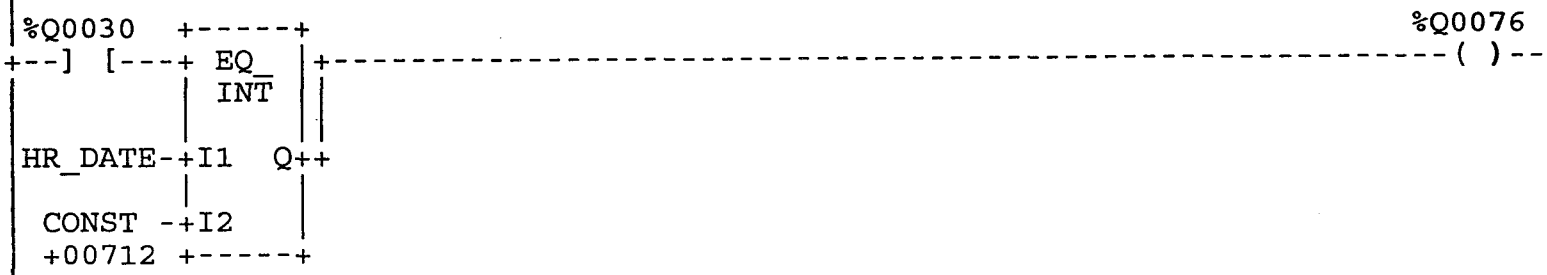

<< RUNG 263 STEP #1064 >>

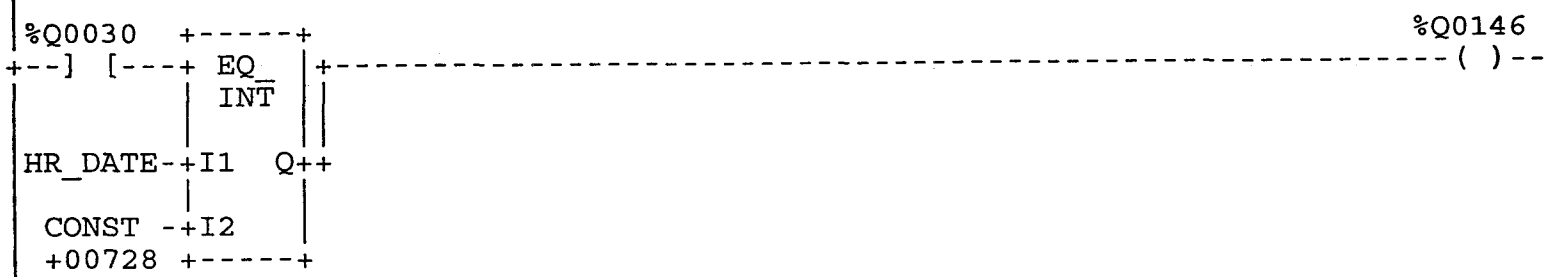

<< RUNG 264 STEP #1067 >>

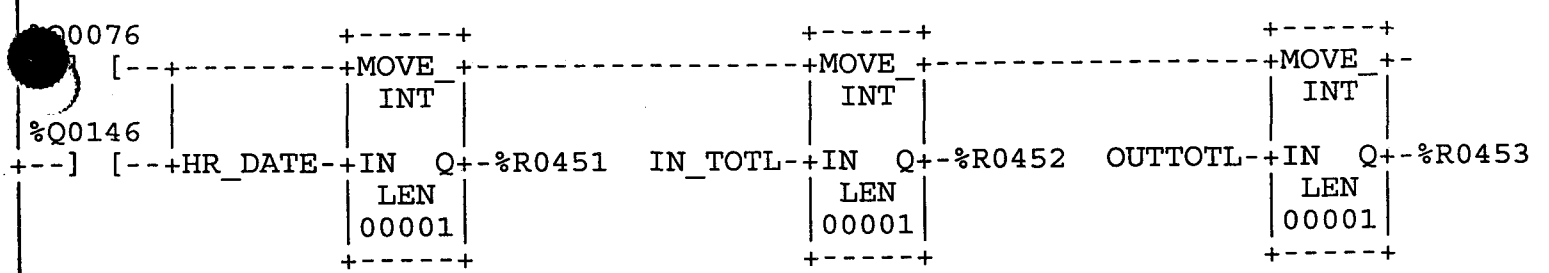

<< RUNG 265 STEP #1072 >>

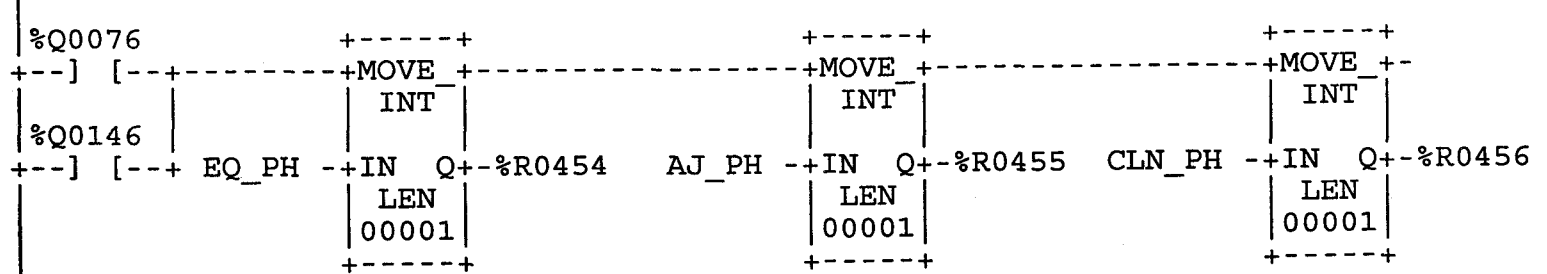

<< RUNG 266 STEP #1077 >>

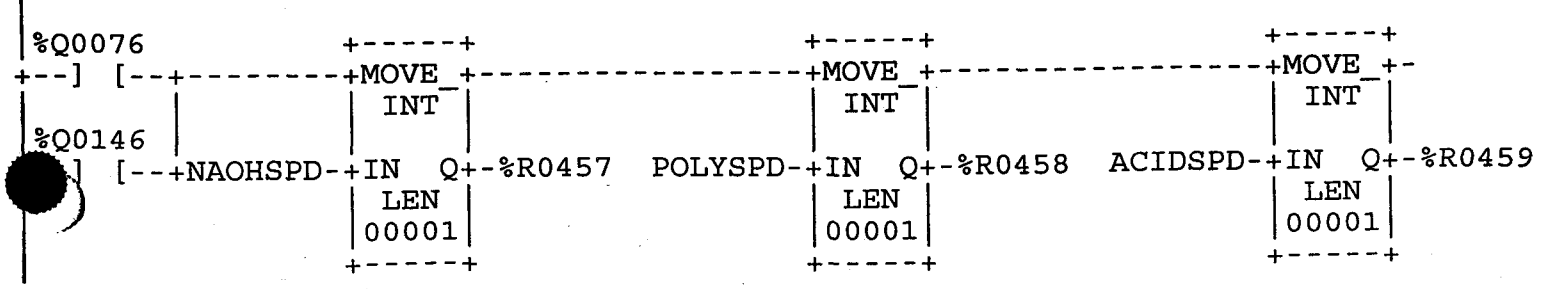

<< RUNG 267 STEP #1082 >>

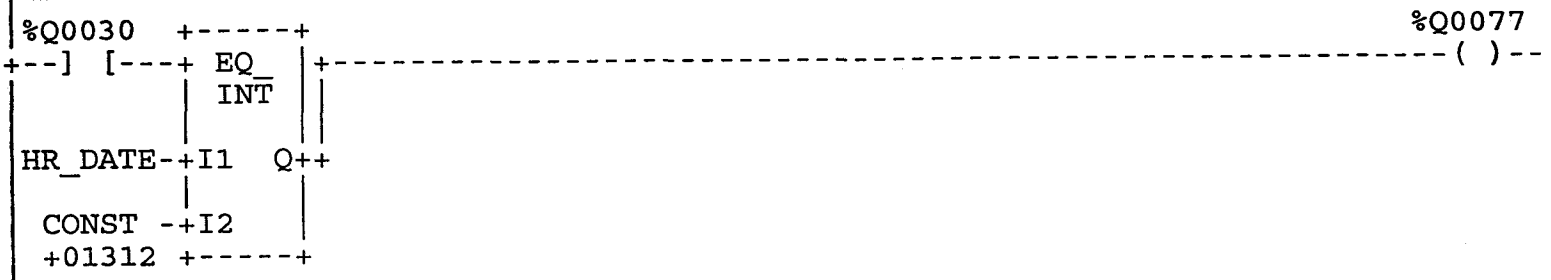

<< RUNG 268 STEP #1085 >>

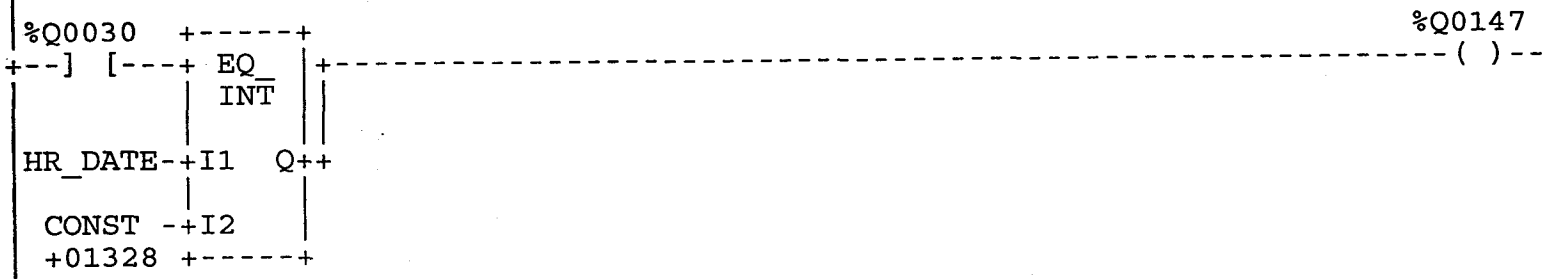

<< RUNG 269 STEP #1088 >>

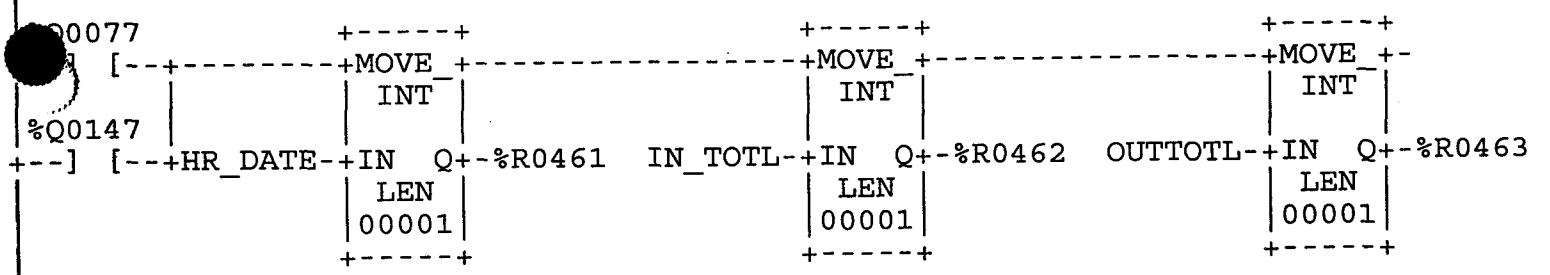

<< RUNG 270 STEP #1093 >>

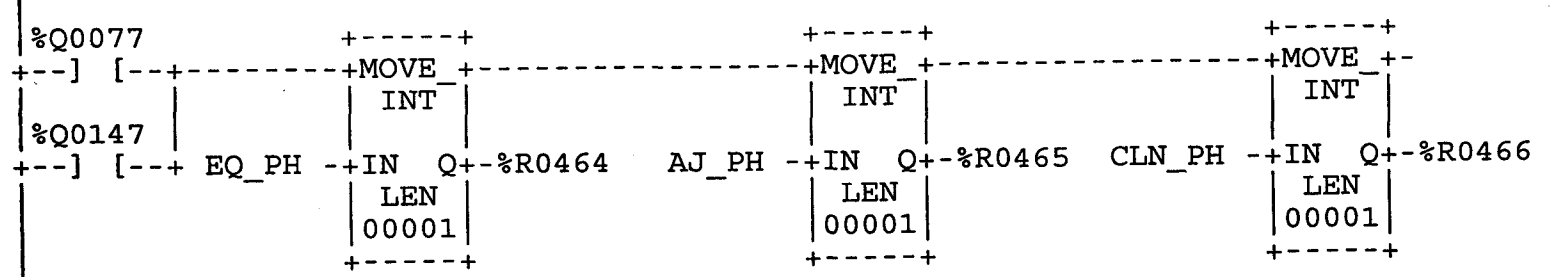

<< RUNG 271 STEP #1098 >>

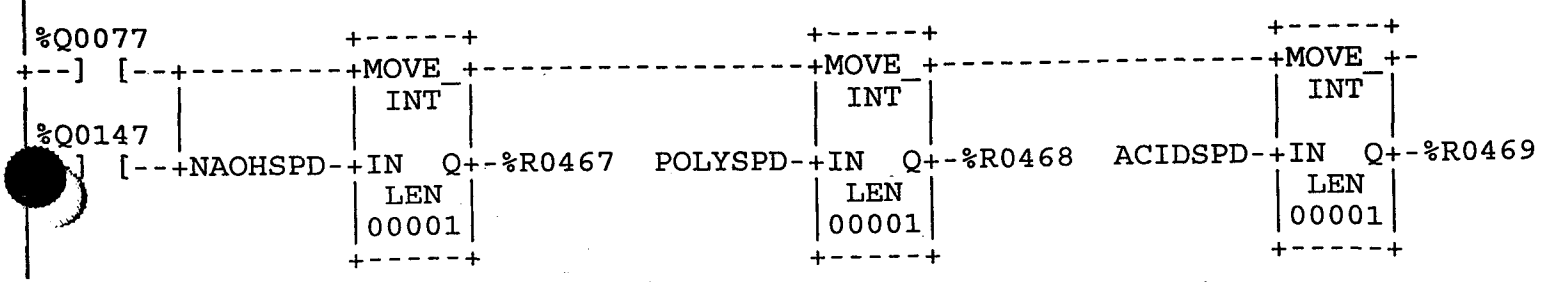

<< RUNG 272 STEP #1103 >>

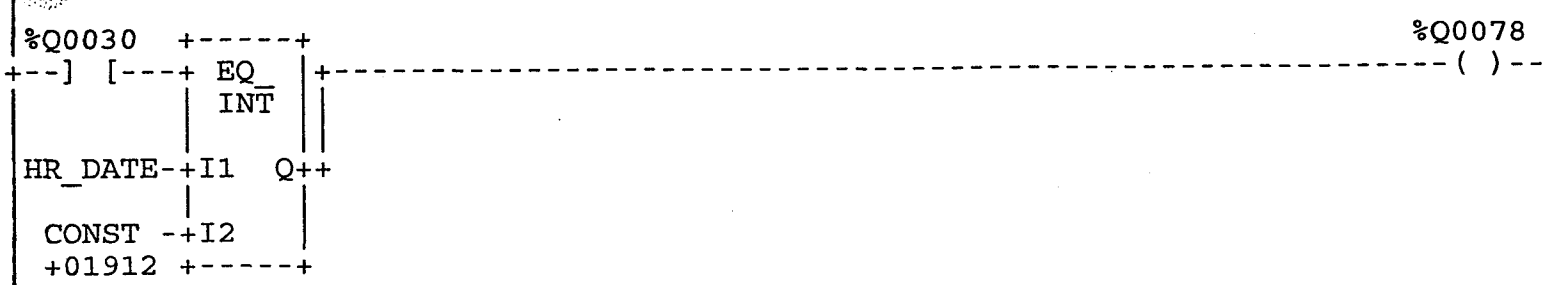

<< RUNG 273 STEP #1106 >>

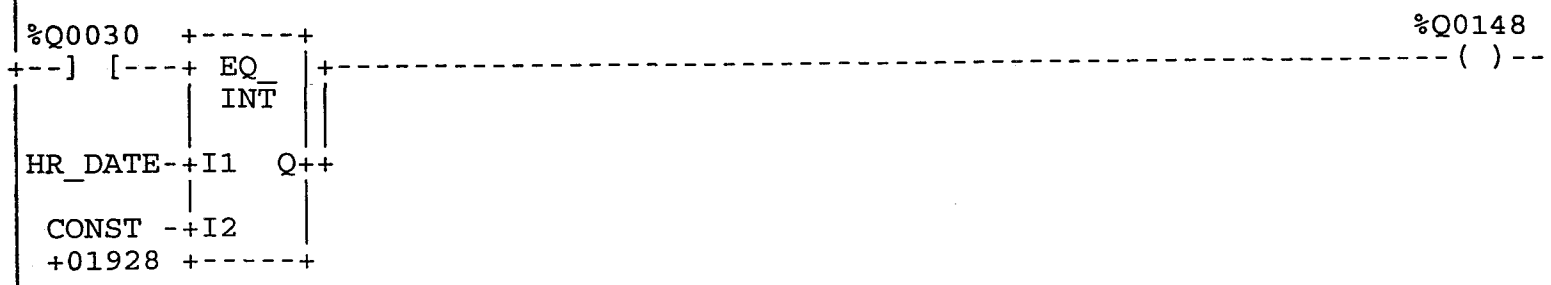

<< RUNG 274 STEP #1109 >>

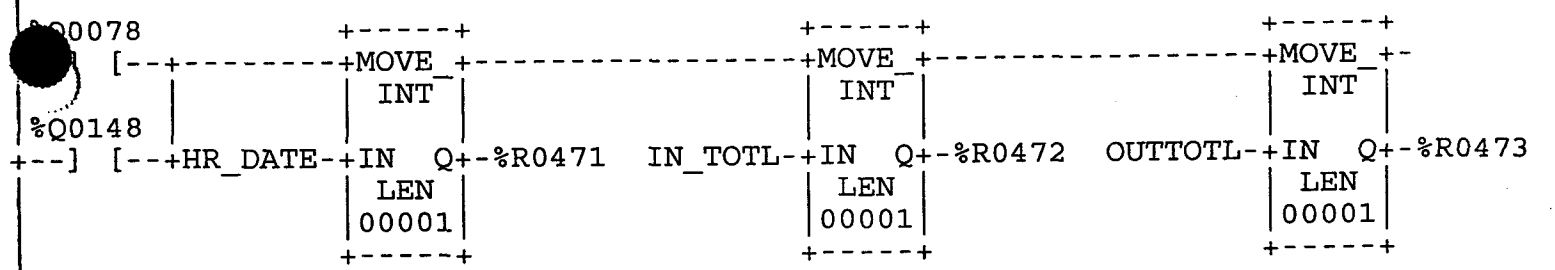

<< RUNG 275 STEP #1114 >>

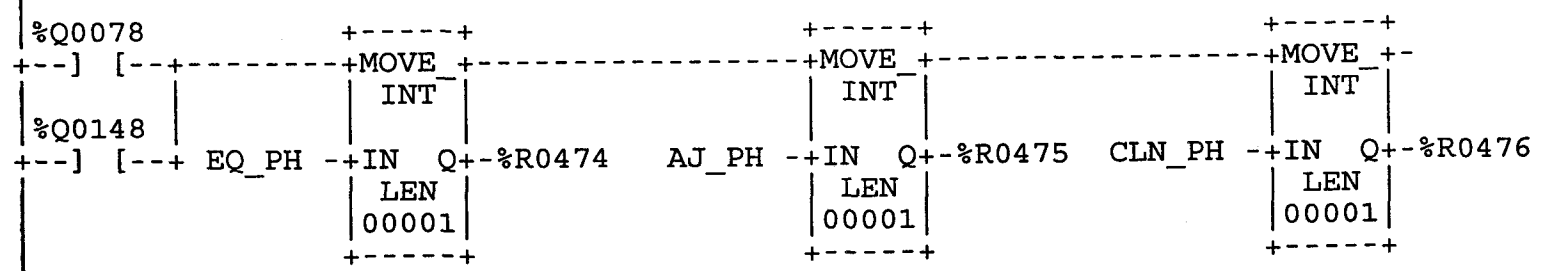

<< RUNG 276 STEP #1119 >>

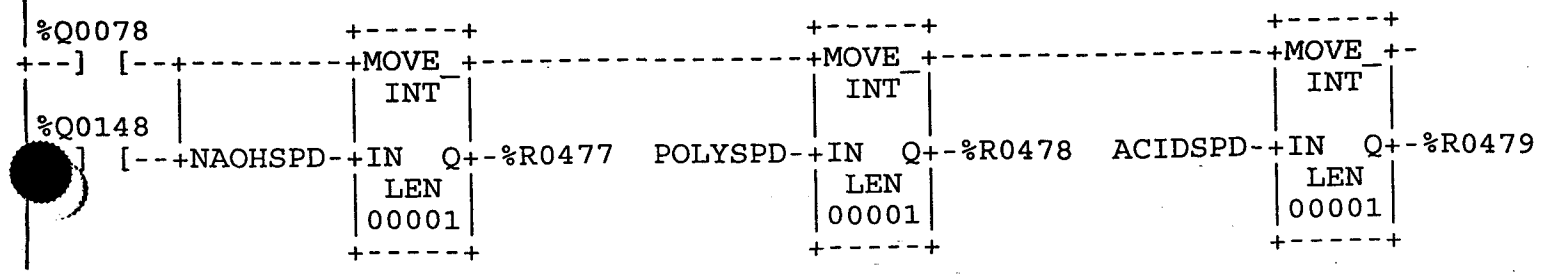

<< RUNG 277 STEP #1124 >>

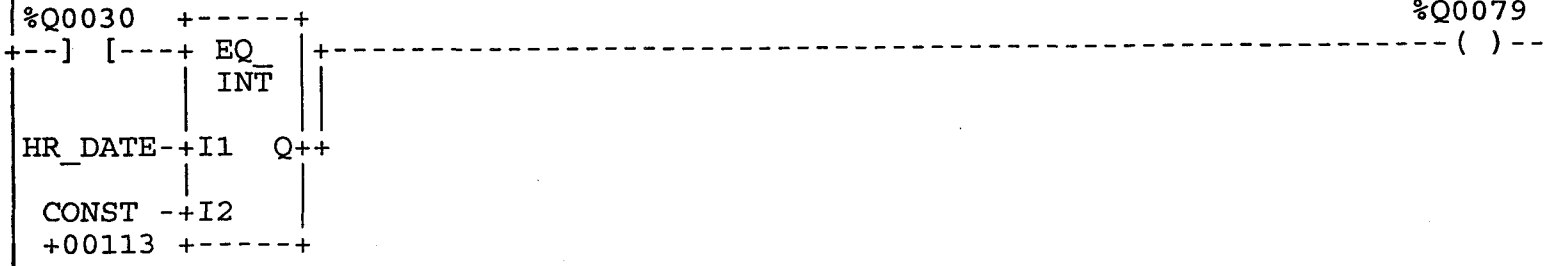

<< RUNG 278 STEP #1127 >>

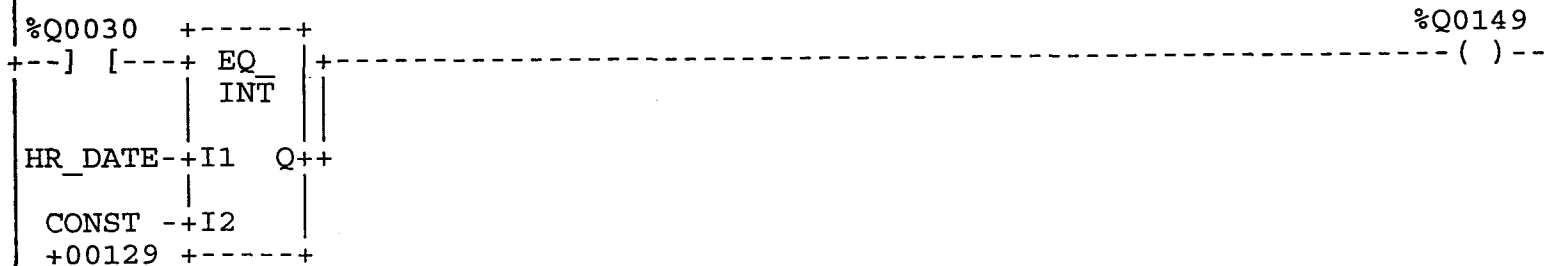

<< RUNG 279 STEP #1130 >>

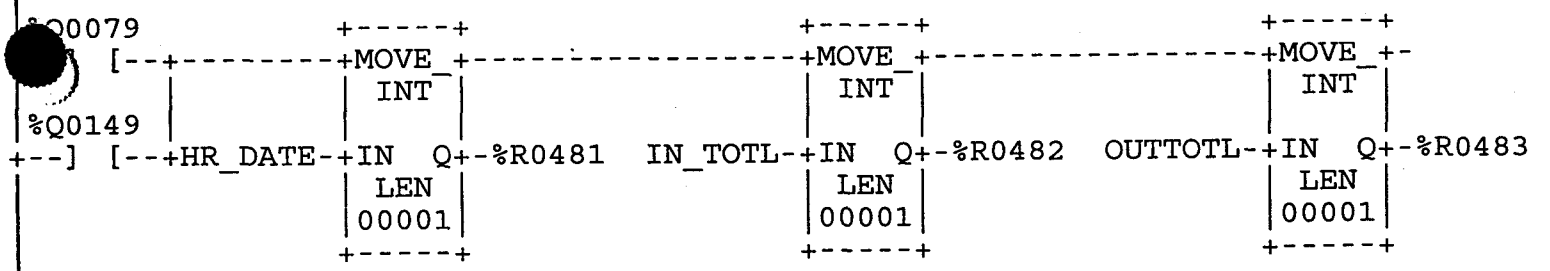

<< RUNG 280 STEP #1135 >>

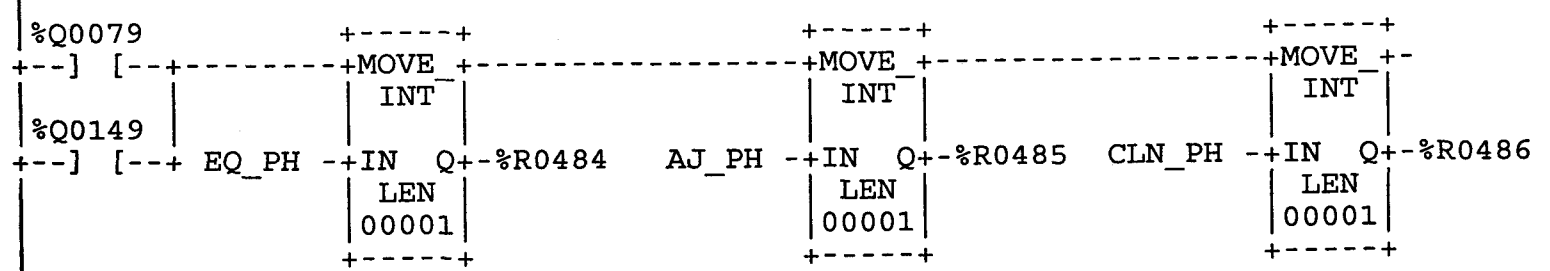

<< RUNG 281 STEP #1140 >>

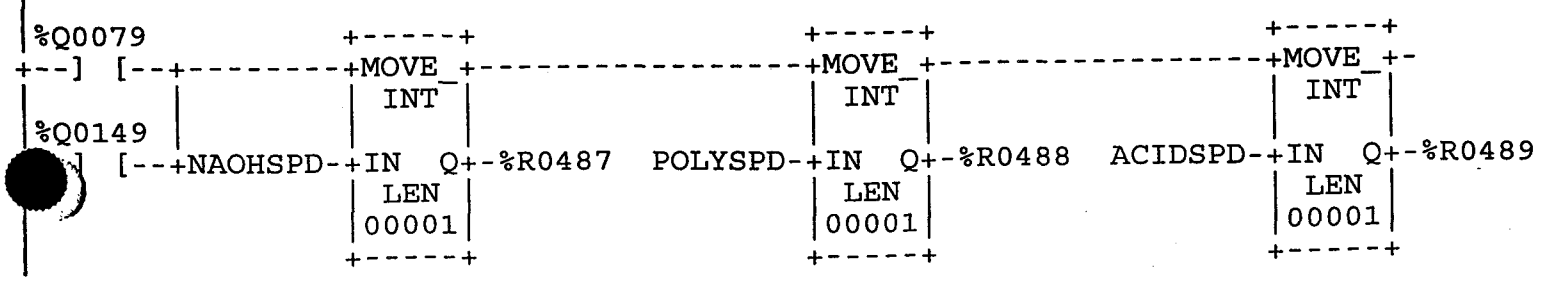

<< RUNG 282 STEP #1145 >>

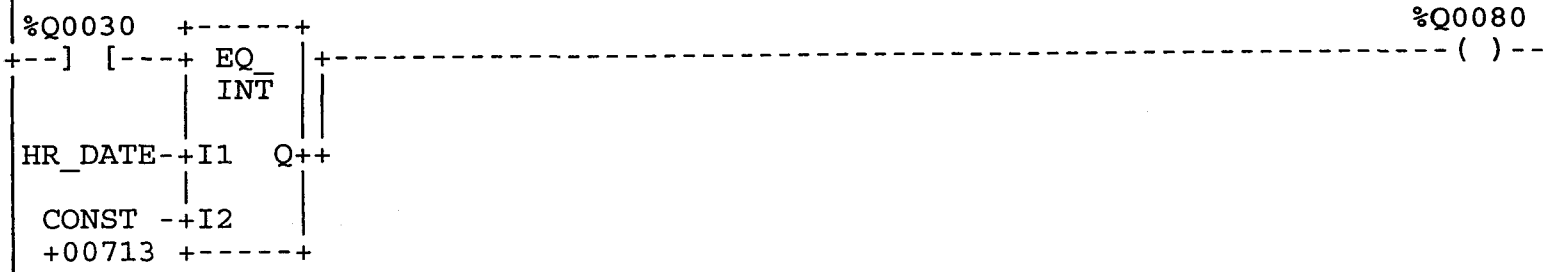

<< RUNG 283 STEP #1148 >>

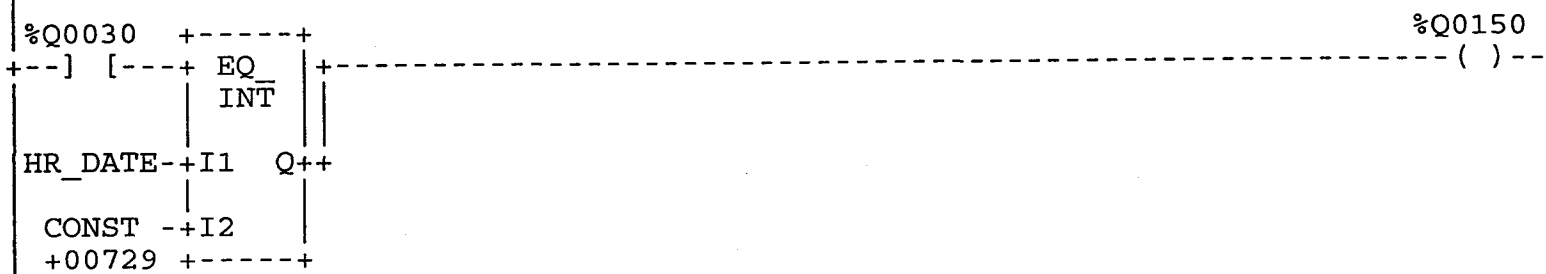

<< RUNG 284 STEP #1151 >>

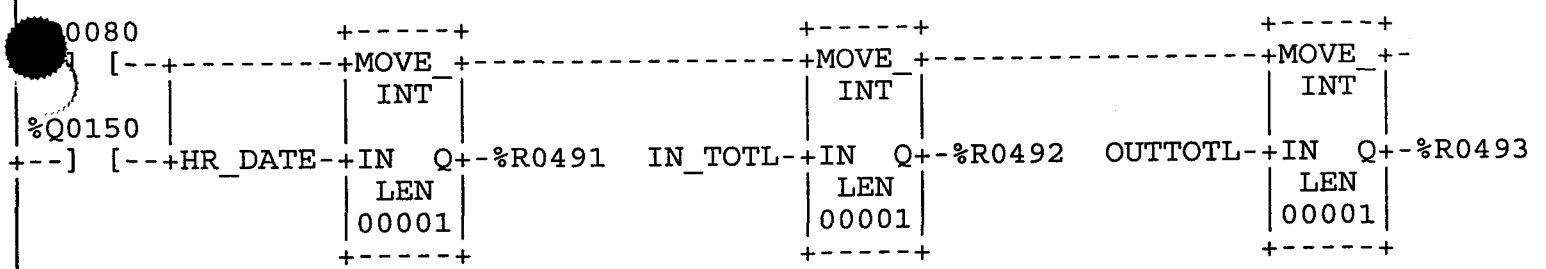

<< RUNG 285 STEP #1156 >>

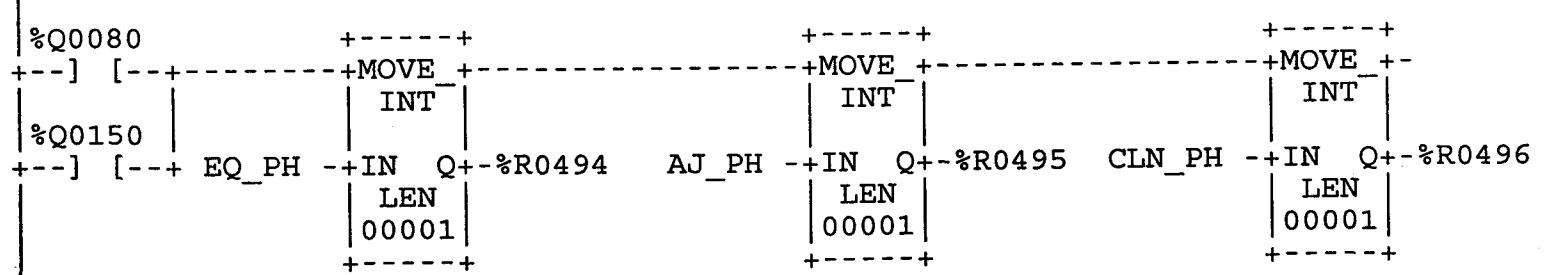

<< RUNG 286 STEP #1161 >>

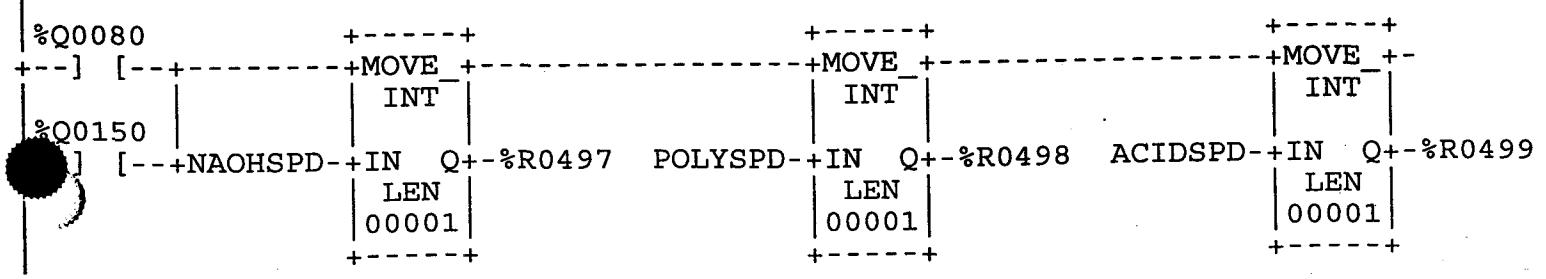

<< RUNG 287 STEP #1166 >>

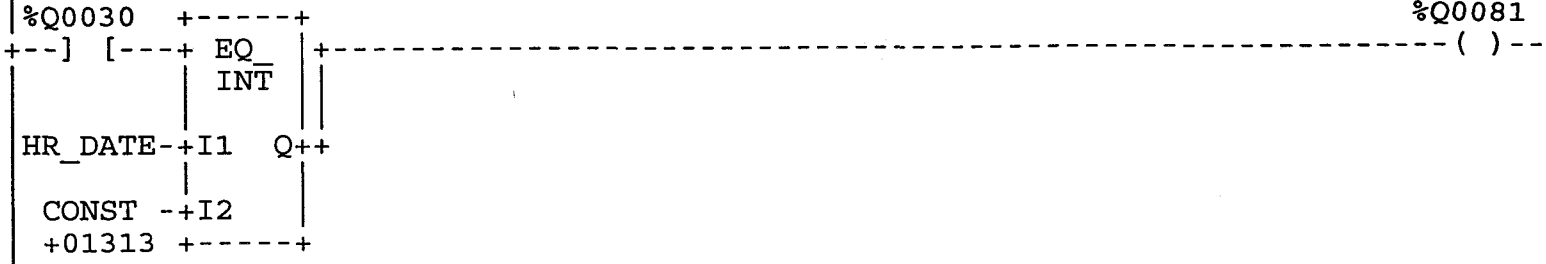

<< RUNG 288 STEP #1169 >>

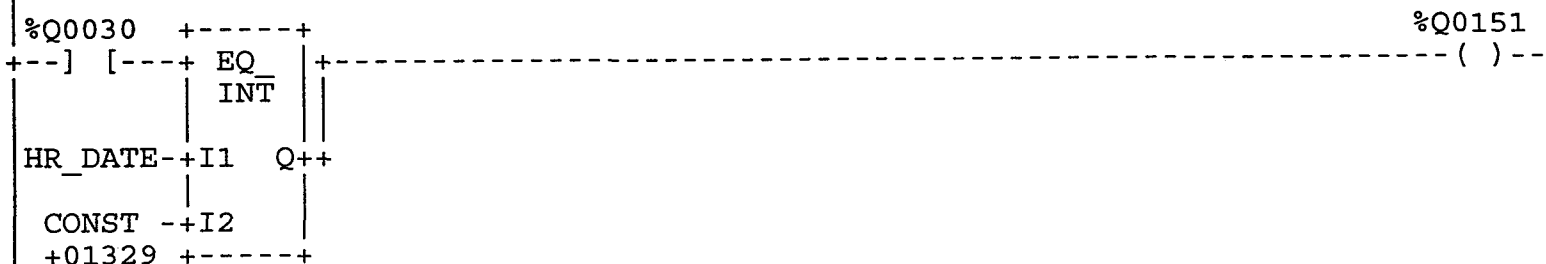

<< RUNG 289 STEP #1172 >>

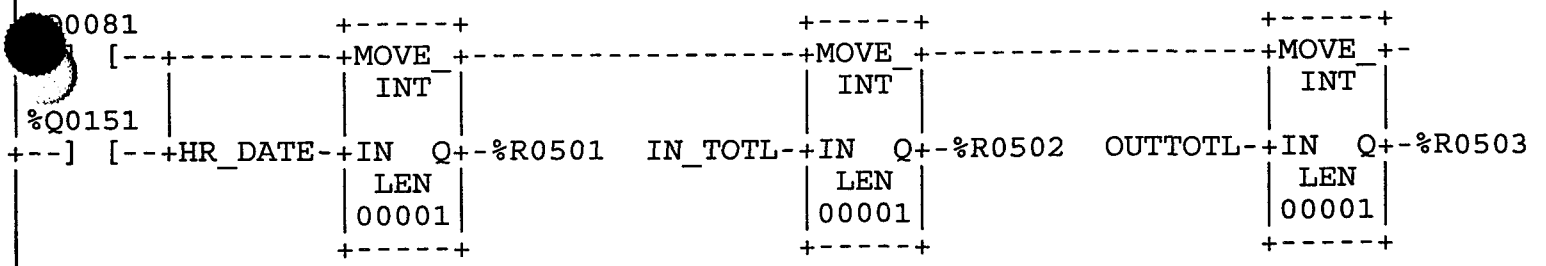

<< RUNG 290 STEP #1177 >>

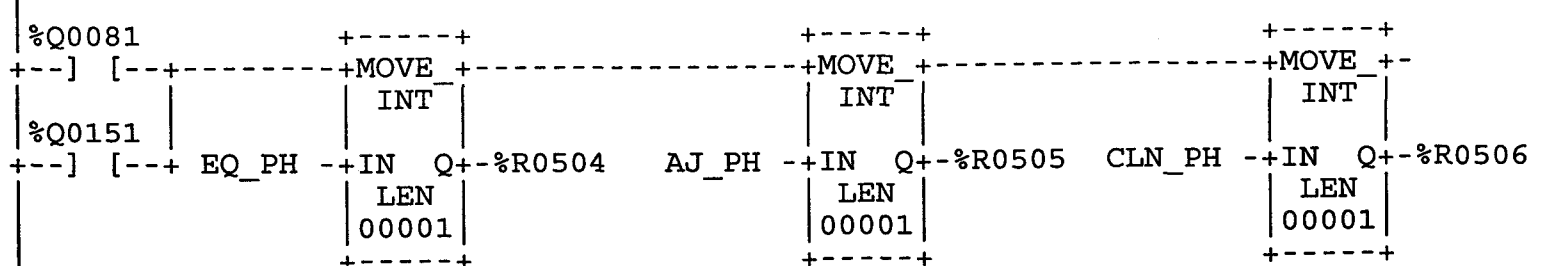

<< RUNG 291 STEP #1182 >>

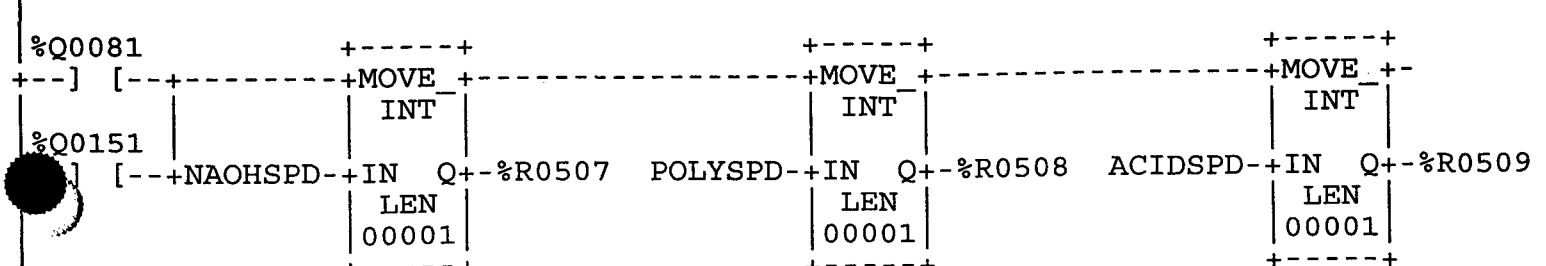

<< RUNG 292 STEP #1187 >>

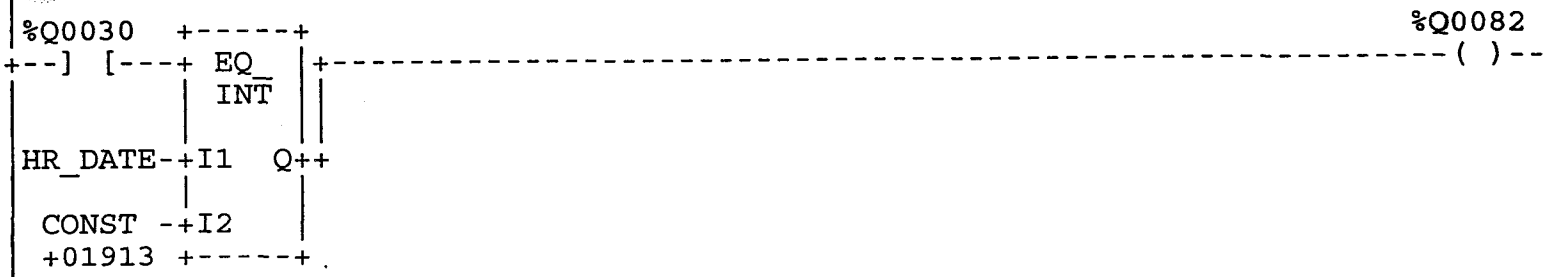

<< RUNG 293 STEP #1190 >>

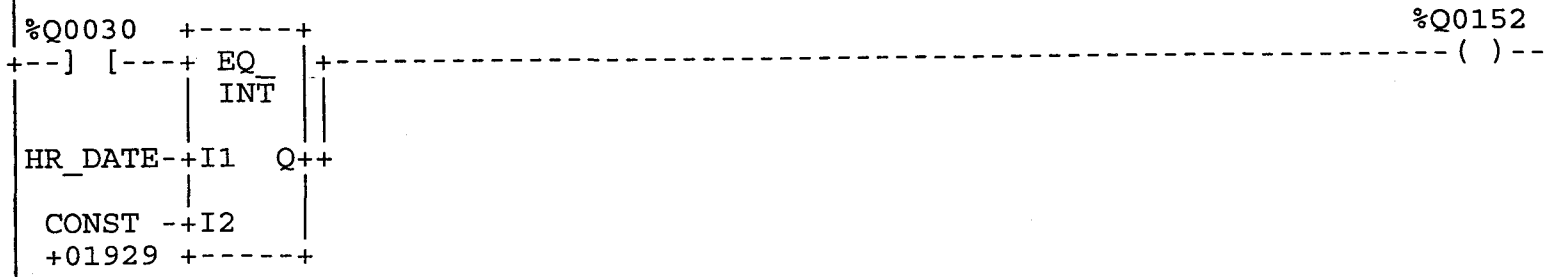

<< RUNG 294 STEP #1193 >>

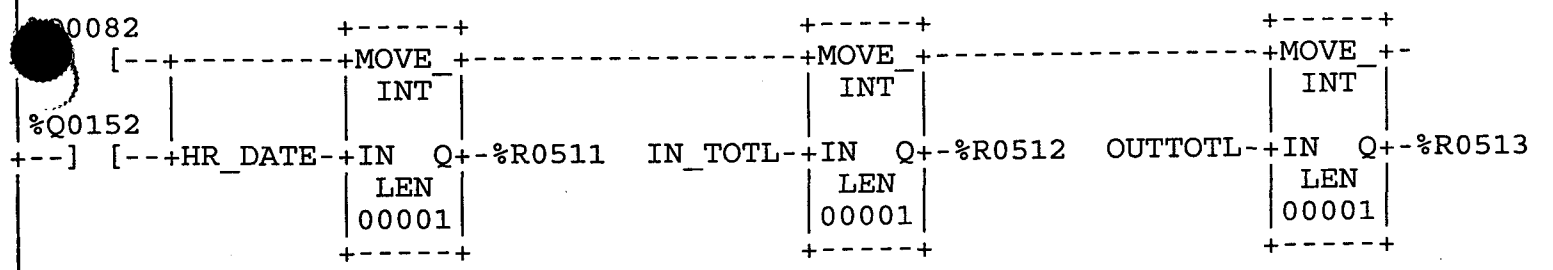

<< RUNG 295 STEP #1198 >>

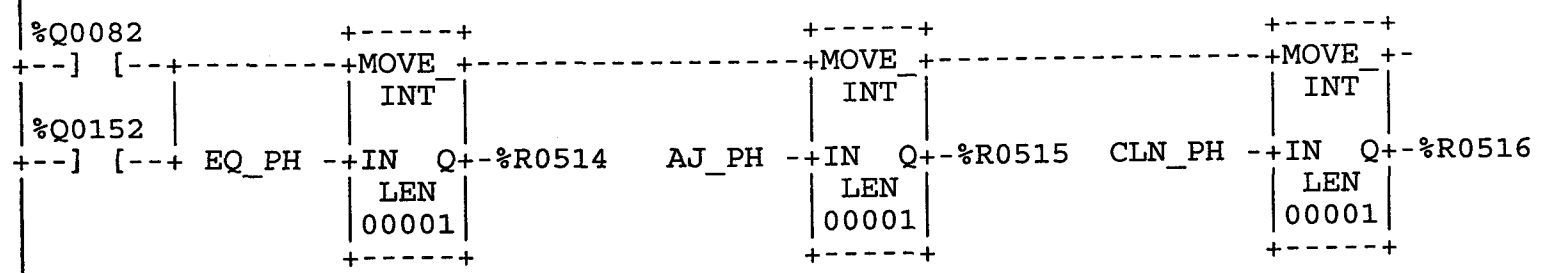

<< RUNG 296 STEP #1203 >>

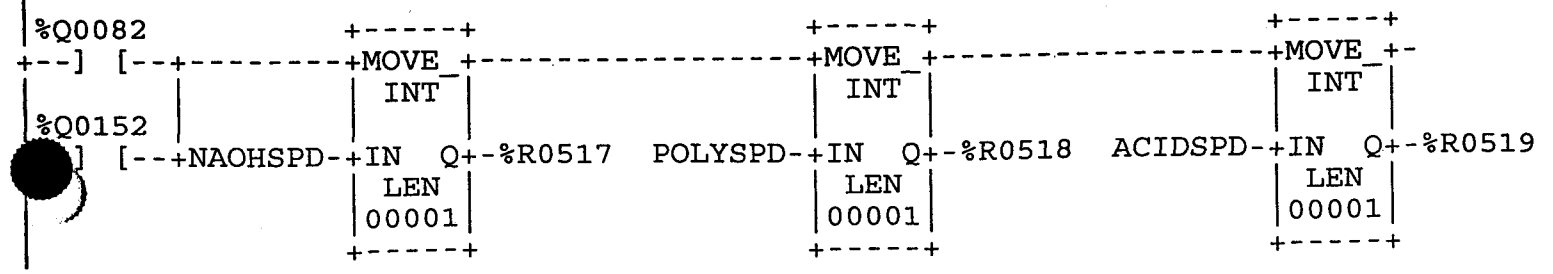

<< RUNG 297 STEP #1208 >>

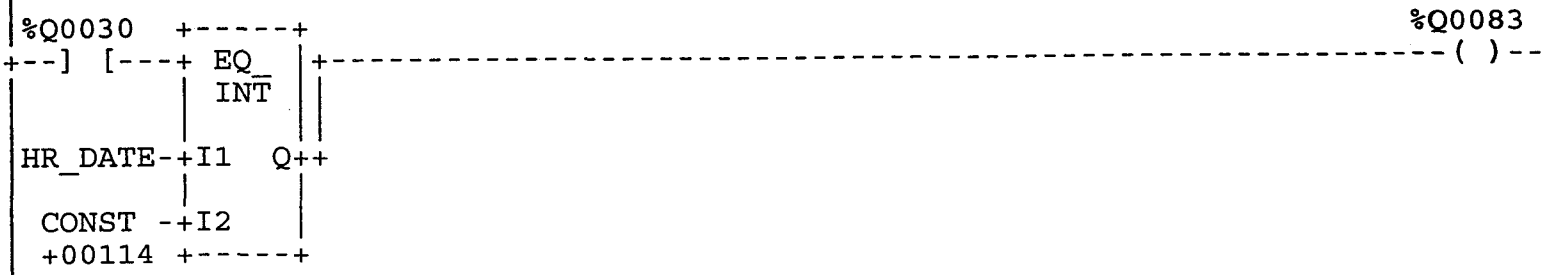

<< RUNG 298 STEP #1211 >>

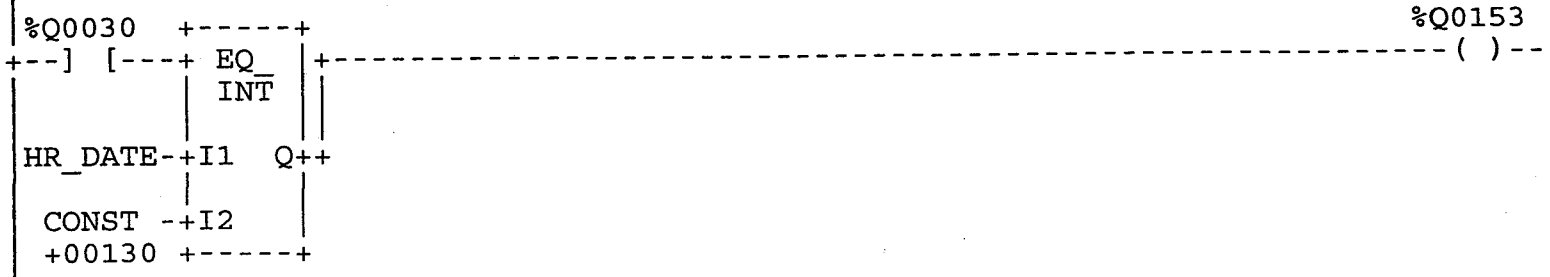

<< RUNG 299 STEP #1214 >>

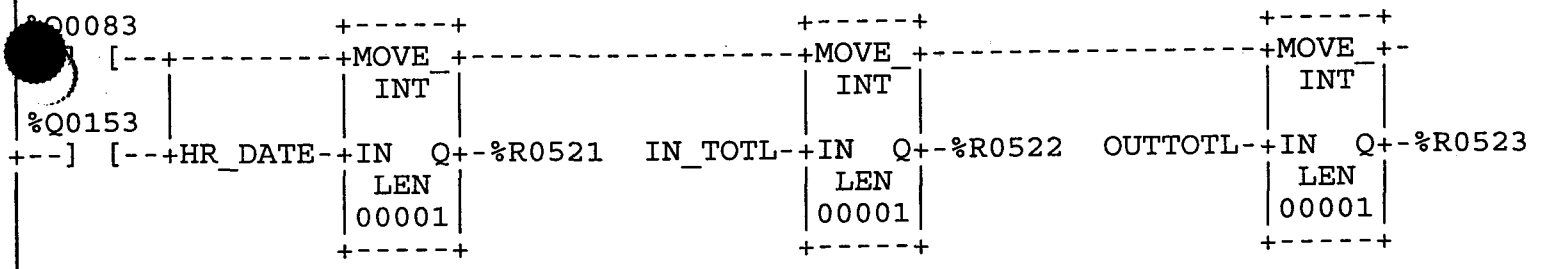

<< RUNG 300 STEP #1219 >>

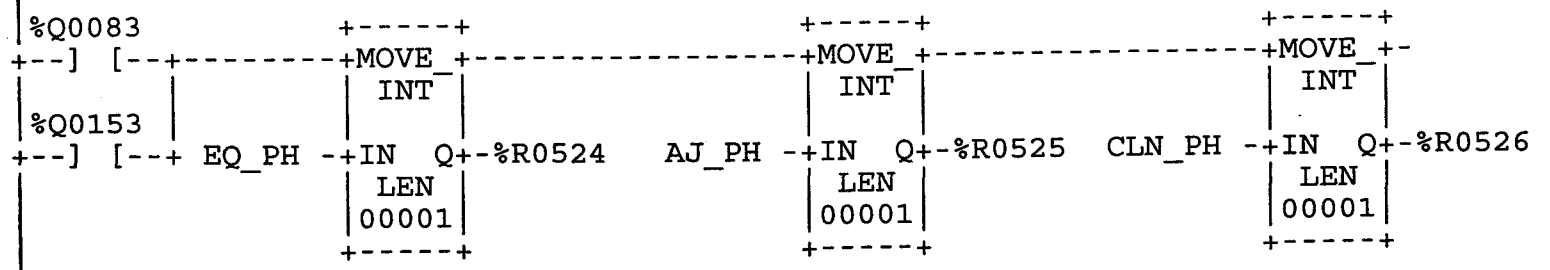

<< RUNG 301 STEP #1224 >>

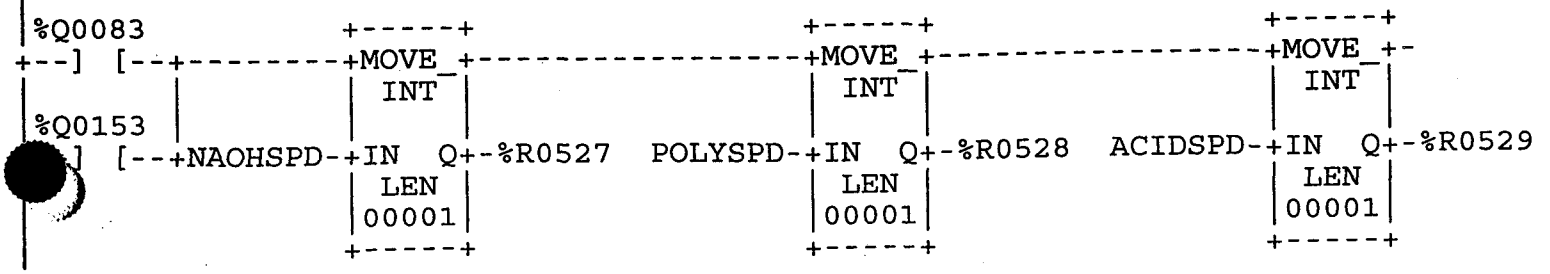

<< RUNG 302 STEP #1229 >>

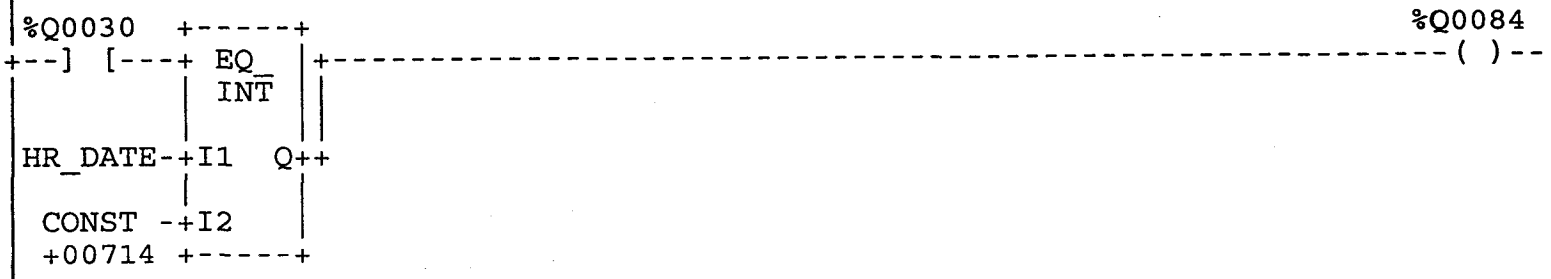

<< RUNG 303 STEP #1232 >>

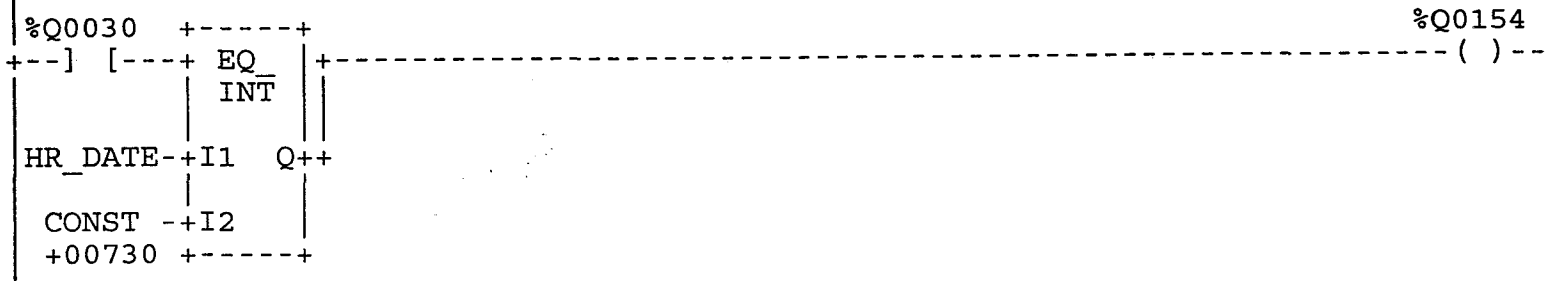

<< RUNG 304 STEP #1235 >>

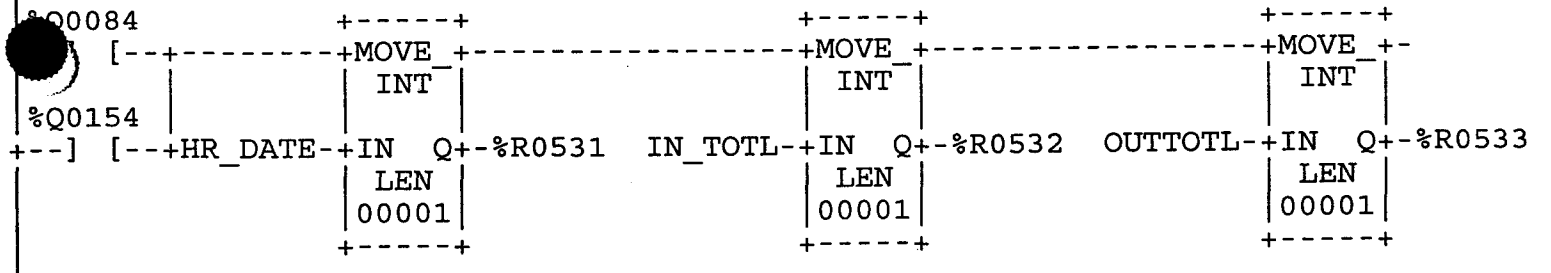

<< RUNG 305 STEP #1240 >>

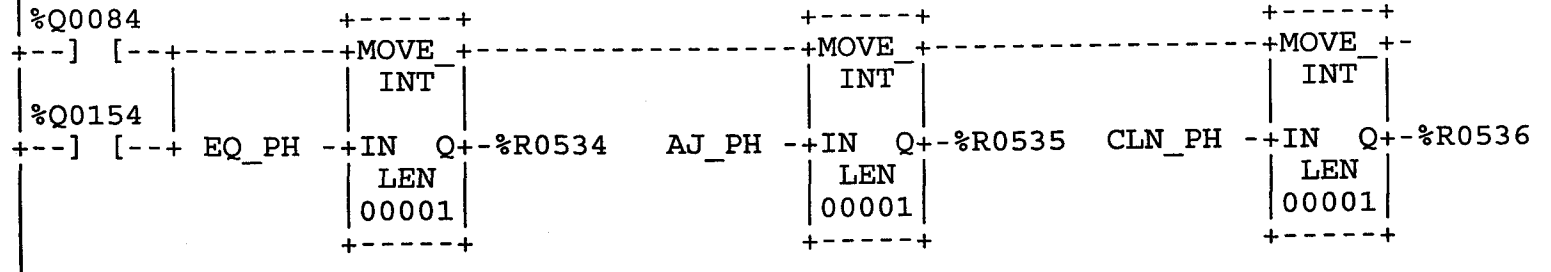

<< RUNG 306 STEP #1245 >>

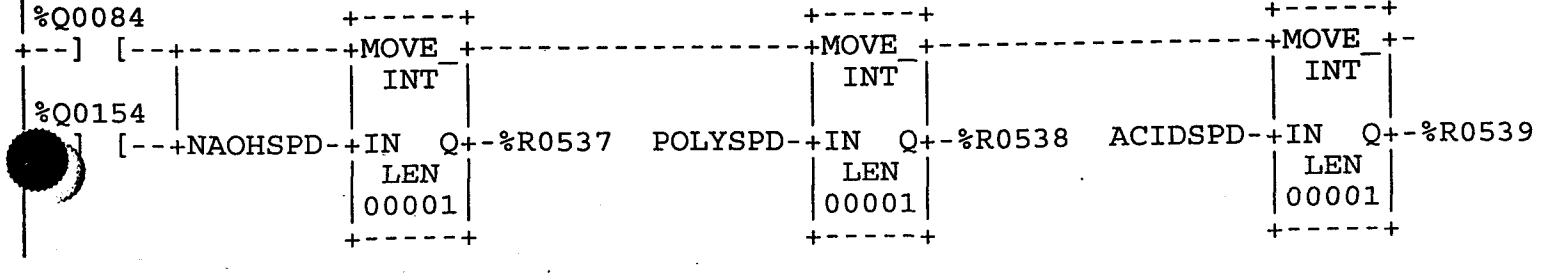

<< RUNG 307 STEP #1250 >>

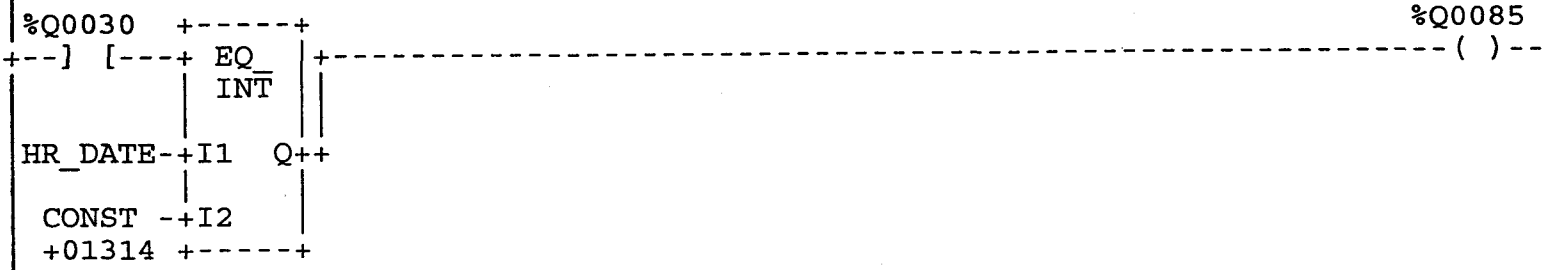

<< RUNG 308 STEP #1253 >>

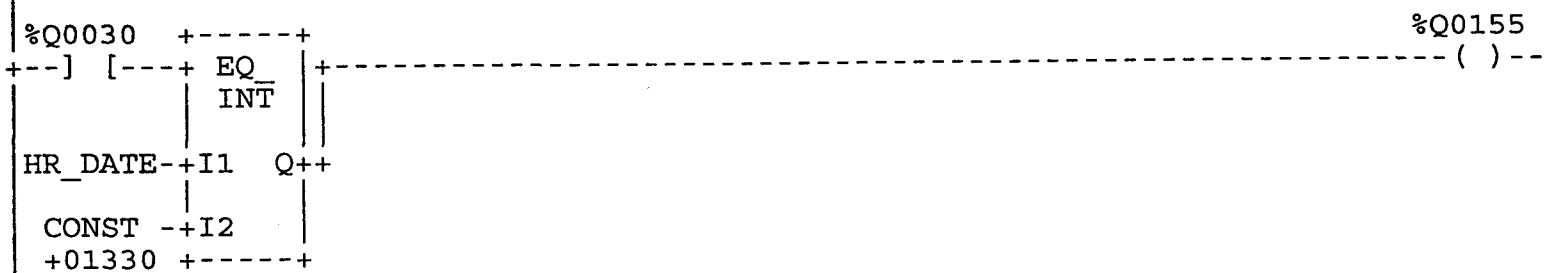

<< RUNG 309 STEP #1256 >>

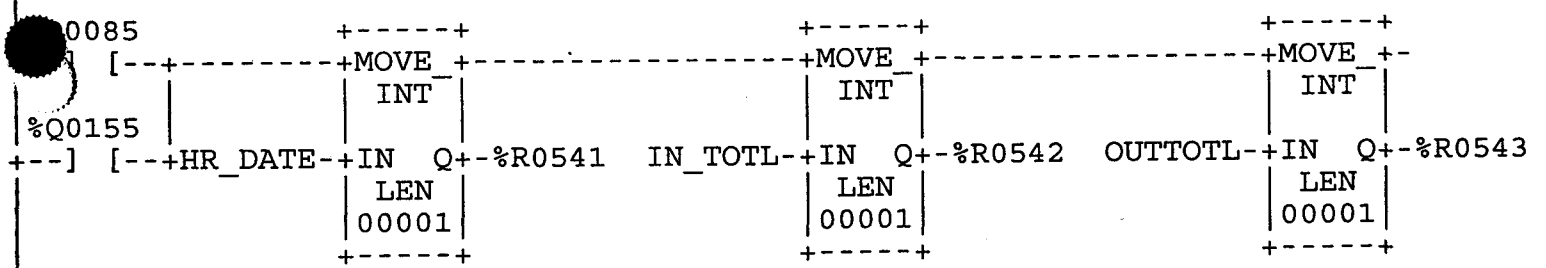

<< RUNG 310 STEP #1261 >>

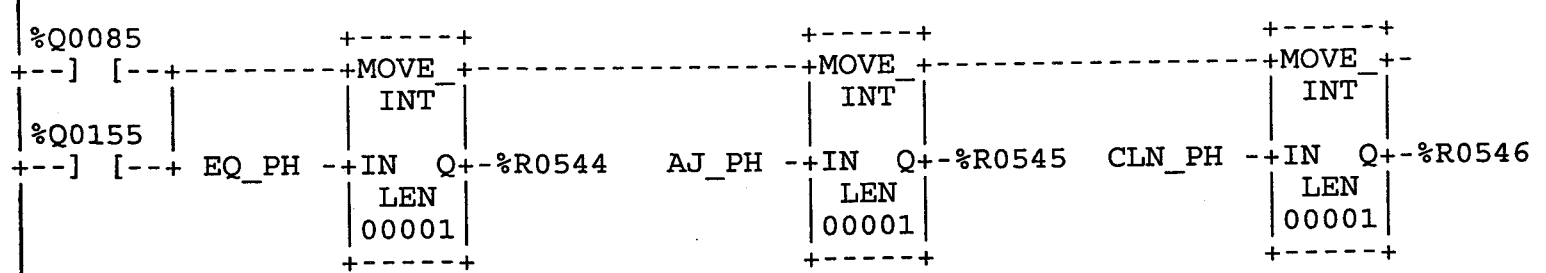

<< RUNG 311 STEP #1266 >>

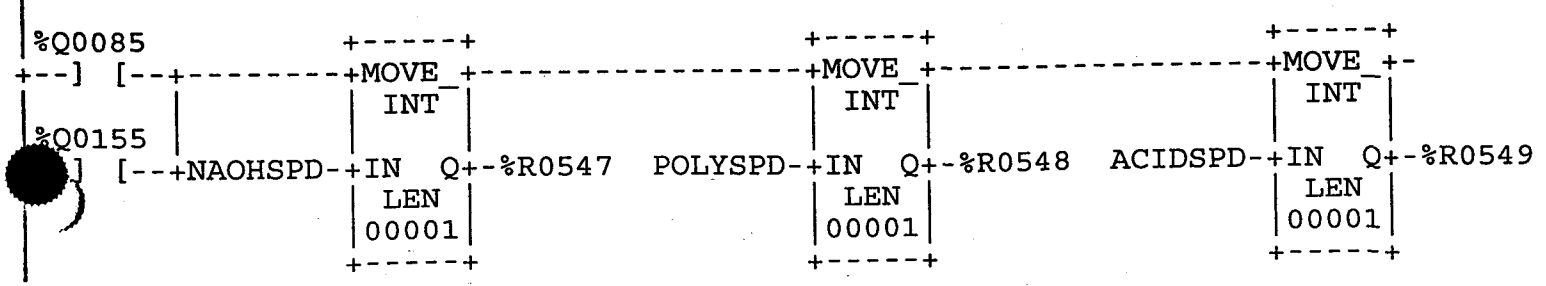

<< RUNG 312 STEP #1271 >>

<< RUNG 313 STEP #1274 >>

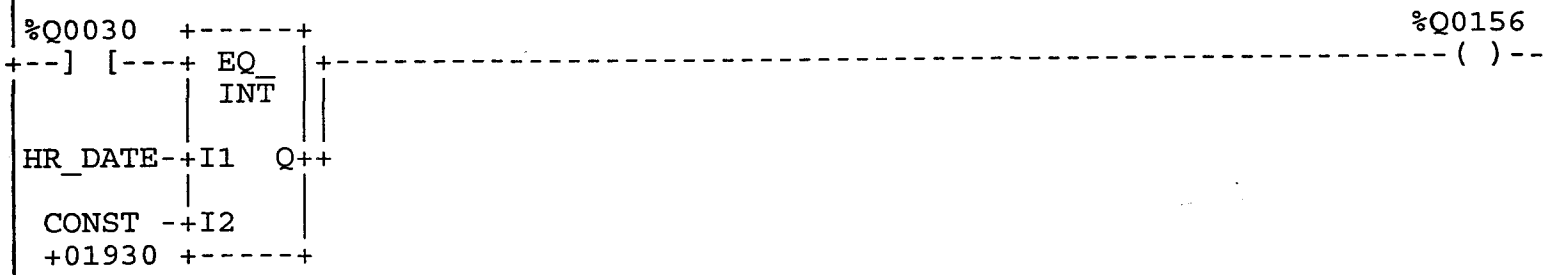

<< RUNG 314 STEP #1277 >>

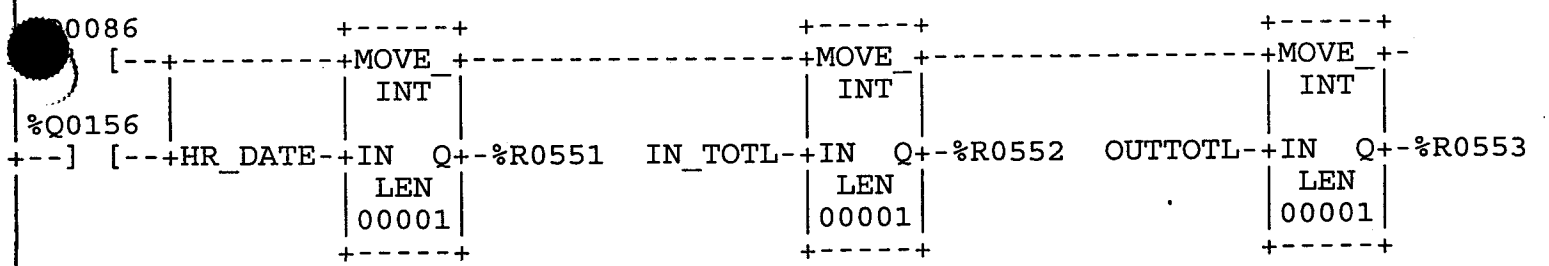

<< RUNG 315 STEP #1282 >>

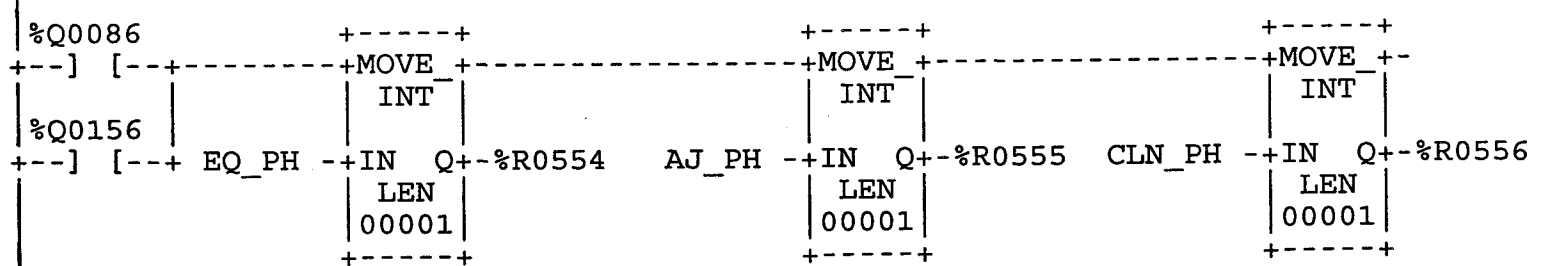

<< RUNG 316 STEP #1287 >>

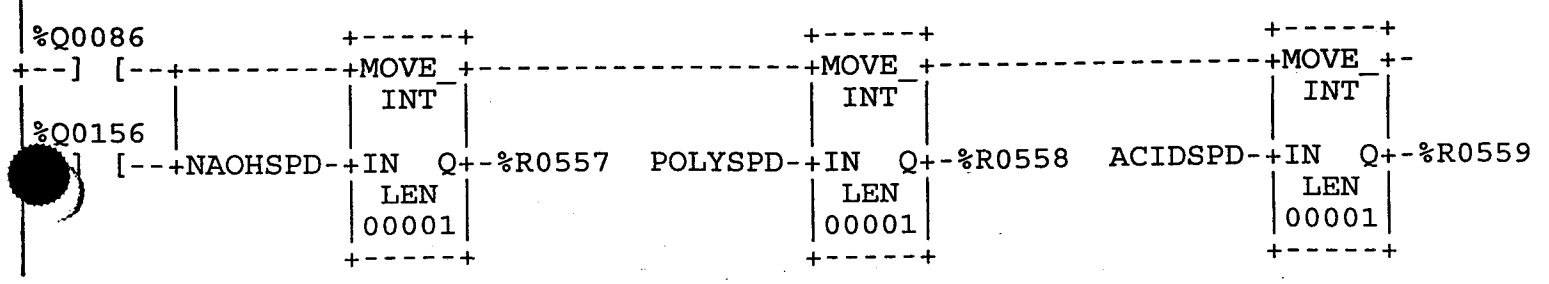

<< RUNG 317 STEP #1292 >>

<< RUNG 318 STEP #1295 >>

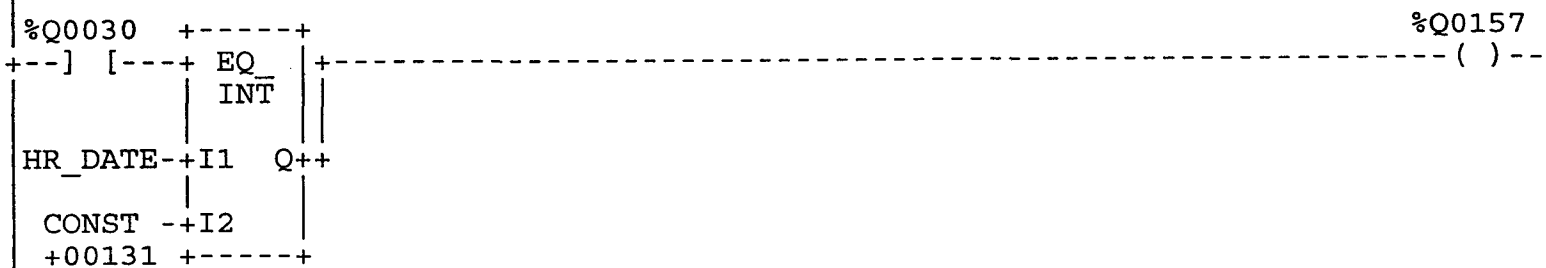

<< RUNG 319 STEP #1298 >>

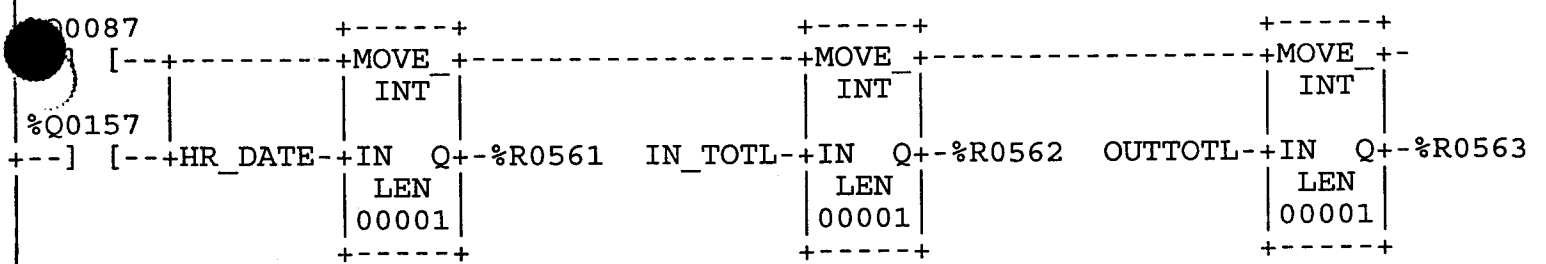

<< RUNG 320 STEP #1303 >>

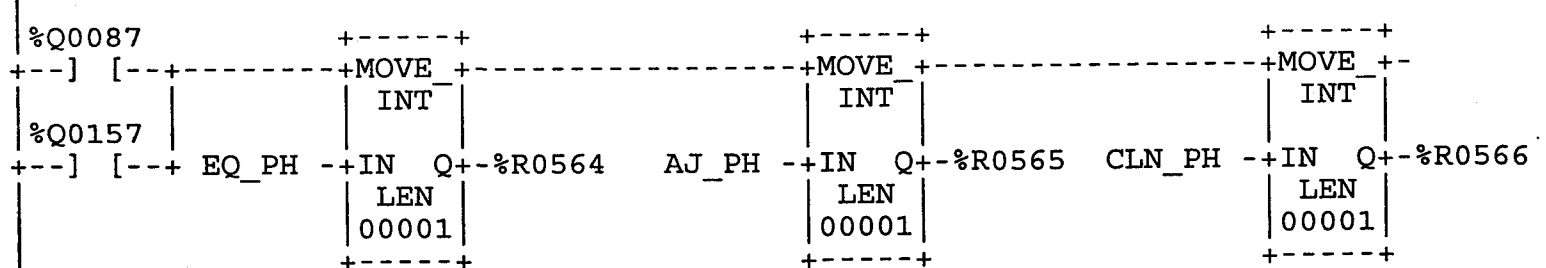

<< RUNG 321 STEP #1308 >>

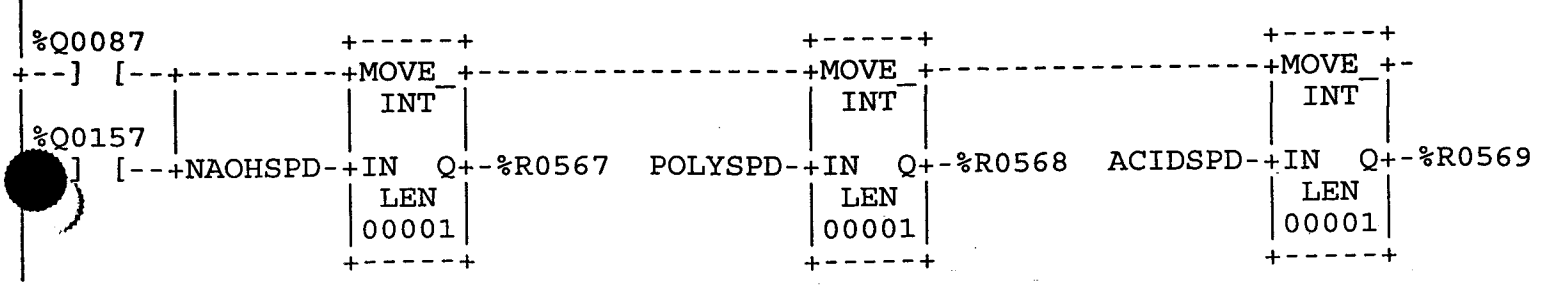

<< RUNG 322 STEP #1313 >>

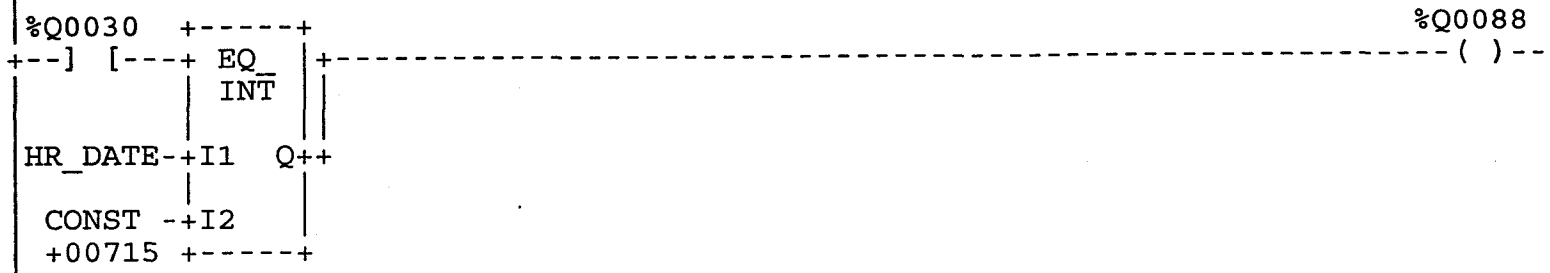

<< RUNG 323 STEP #1316 >>

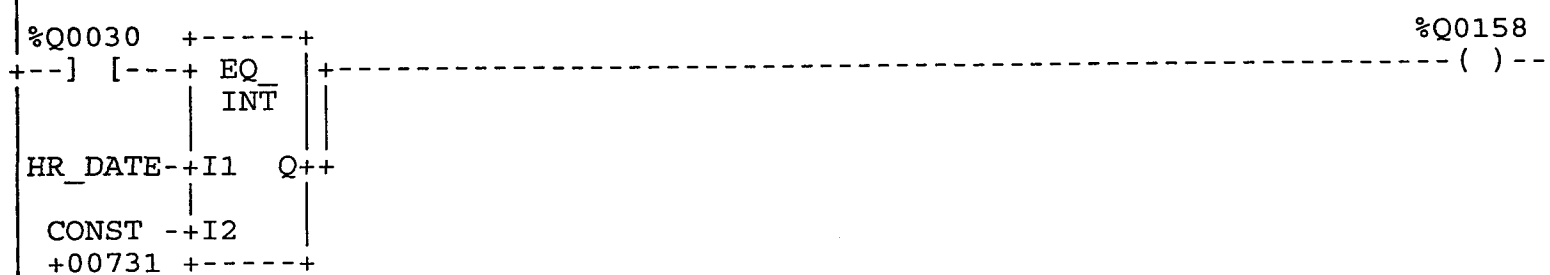

<< RUNG 324 STEP #1319 >>

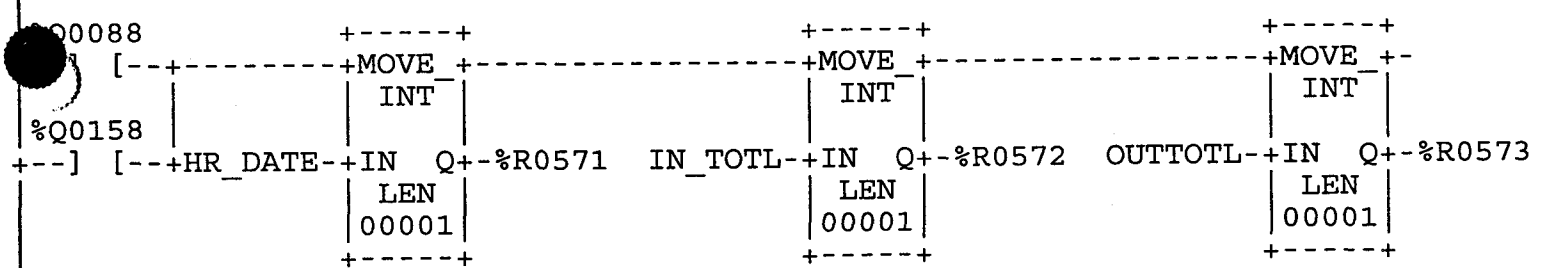

<< RUNG 325 STEP #1324 >>

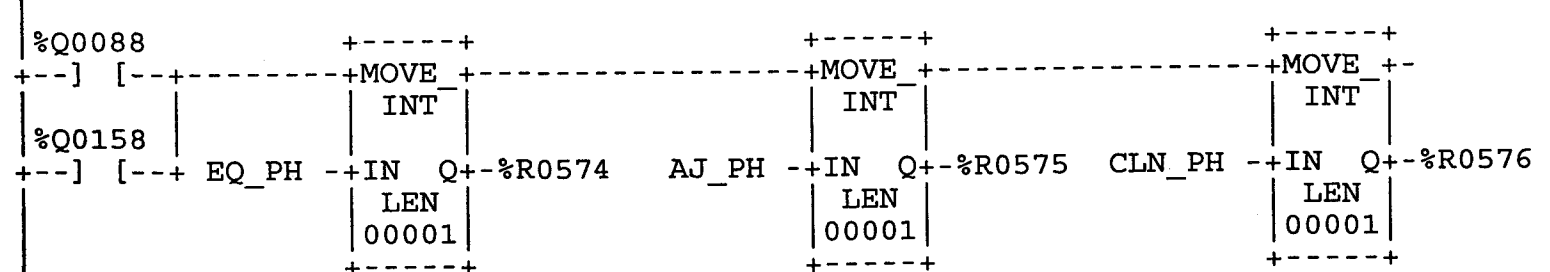

<< RUNG 326 STEP #1329 >>

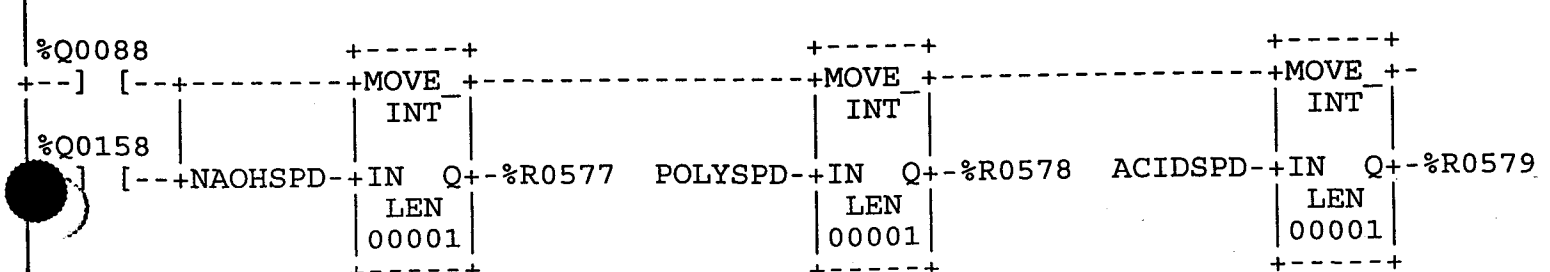

<< RUNG 327 STEP #1334 >>

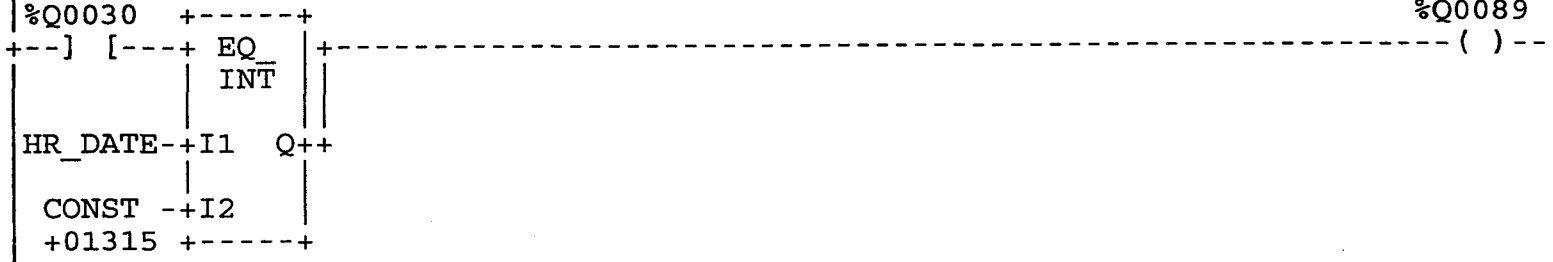

<< RUNG 328 STEP #1337 >>

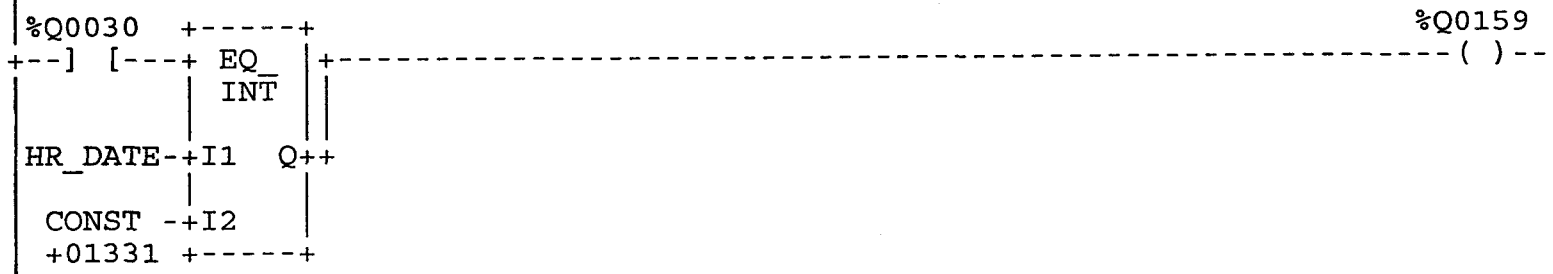

<< RUNG 329 STEP #1340 >>

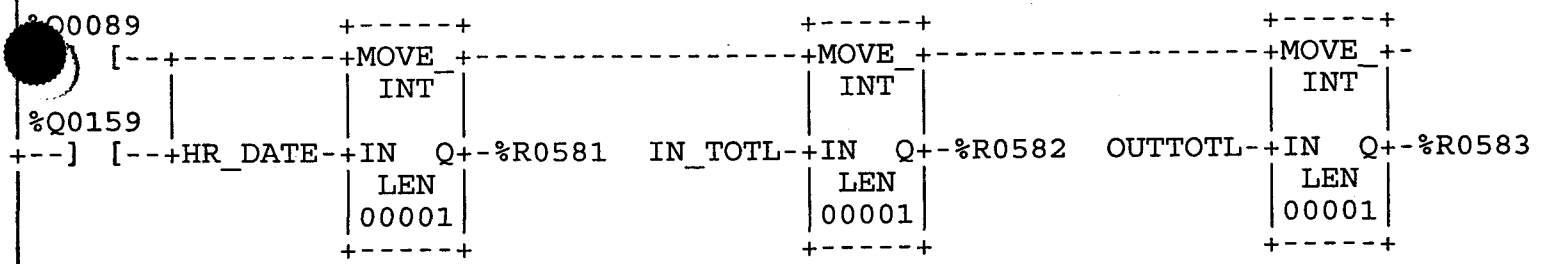

<< RUNG 330 STEP #1345 >>

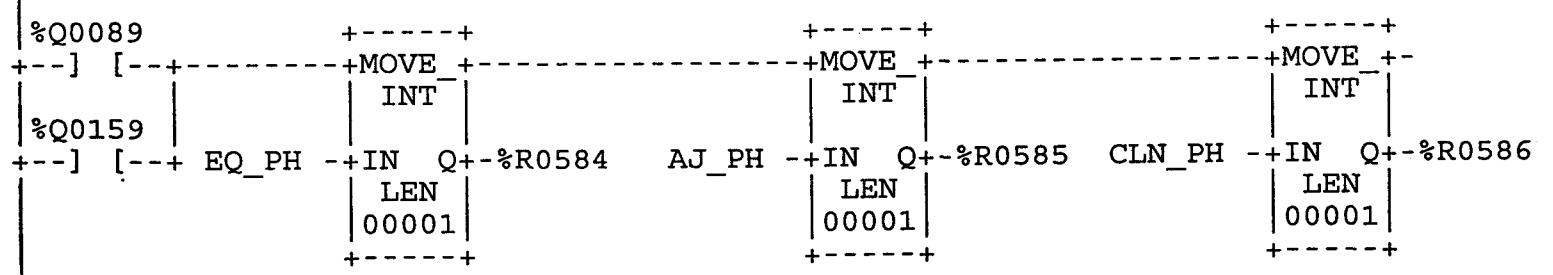

<< RUNG 331 STEP #1350 >>

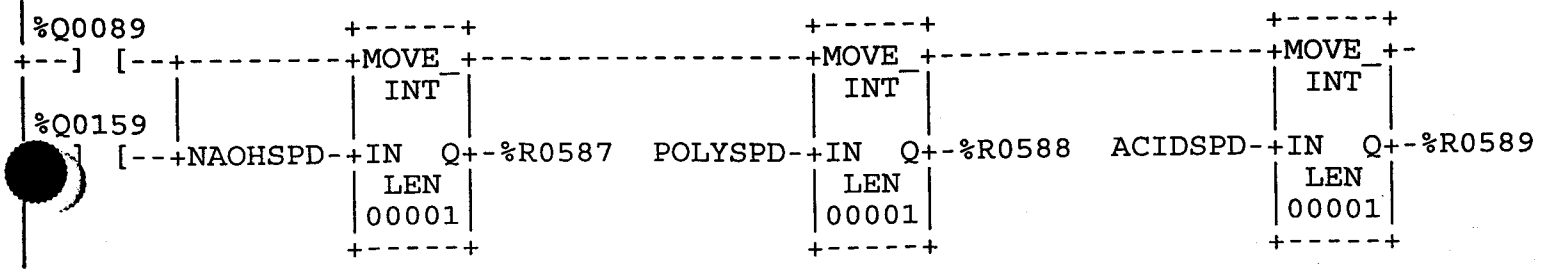

<< RUNG 332 STEP #1355 >>

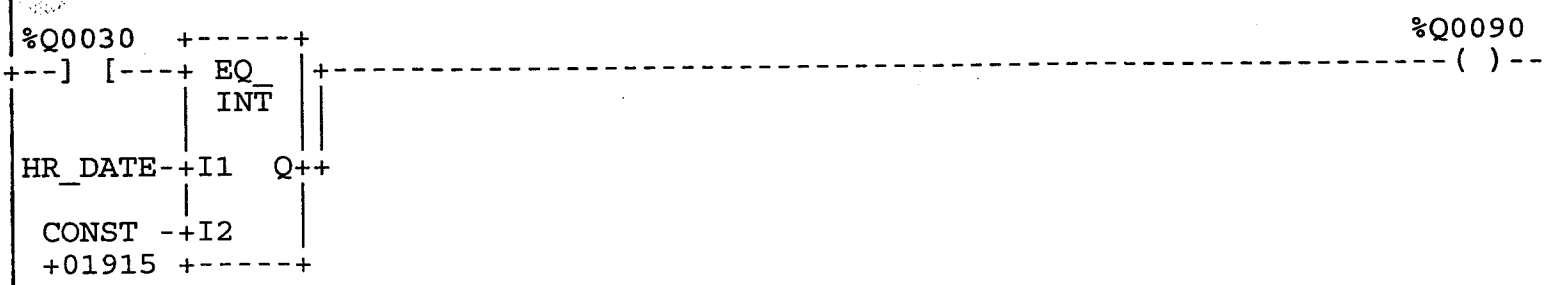

<< RUNG 333 STEP #1358 >>

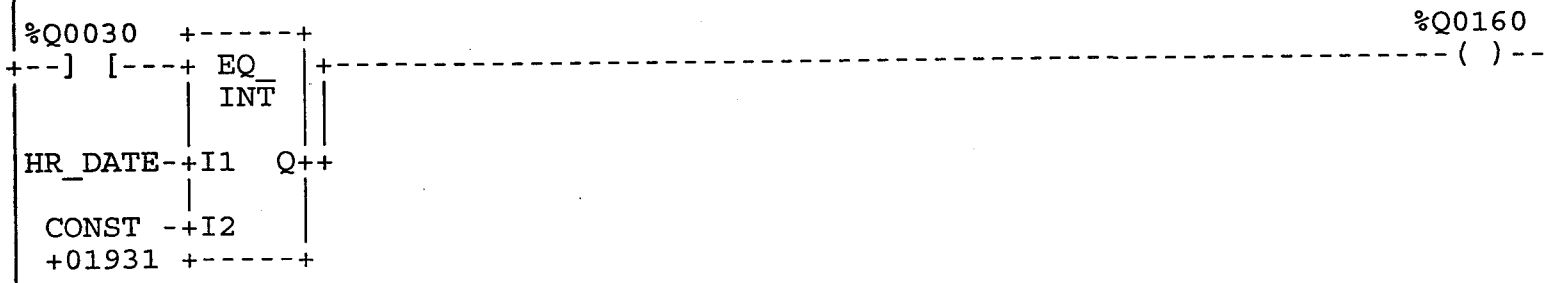

<< RUNG 334 STEP #1361 >>

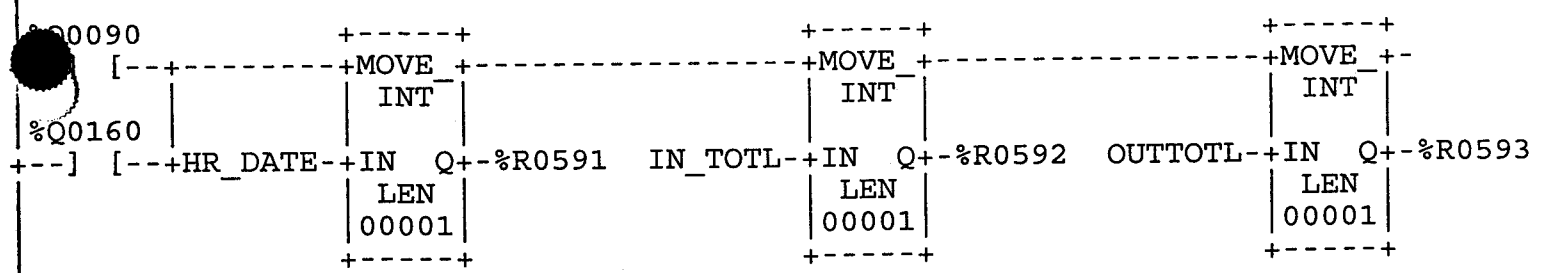

<< RUNG 335 STEP #1366 >>

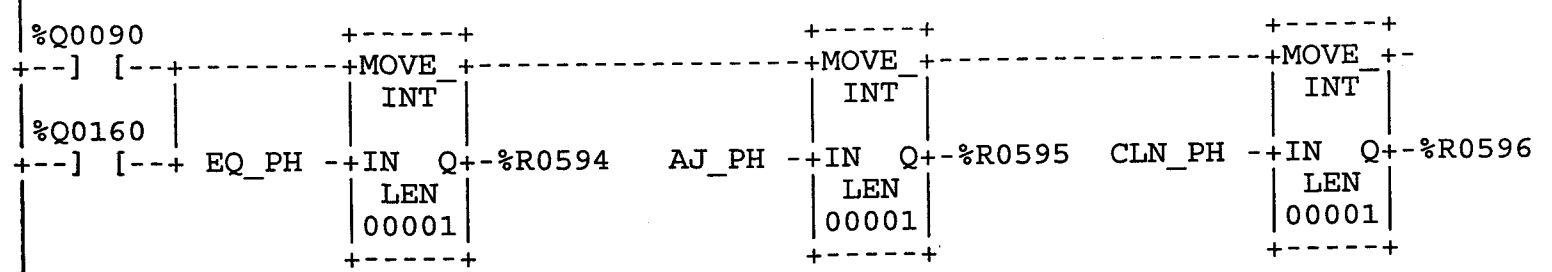

<< RUNG 336 STEP #1371 >>

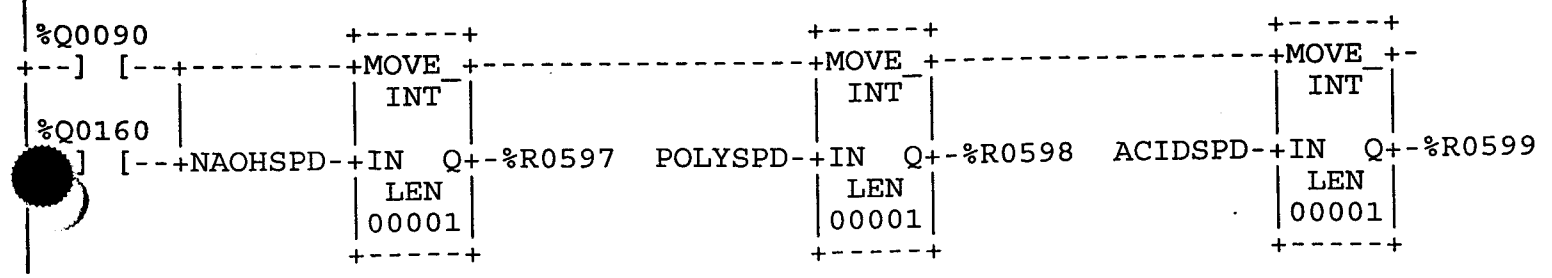

RUNG 337 STEP #1376 >>

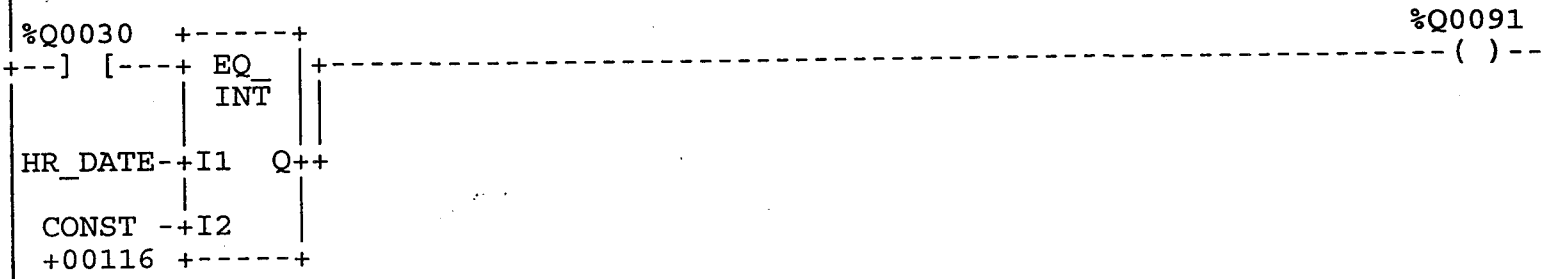

<< RUNG 338 STEP #1379 >>

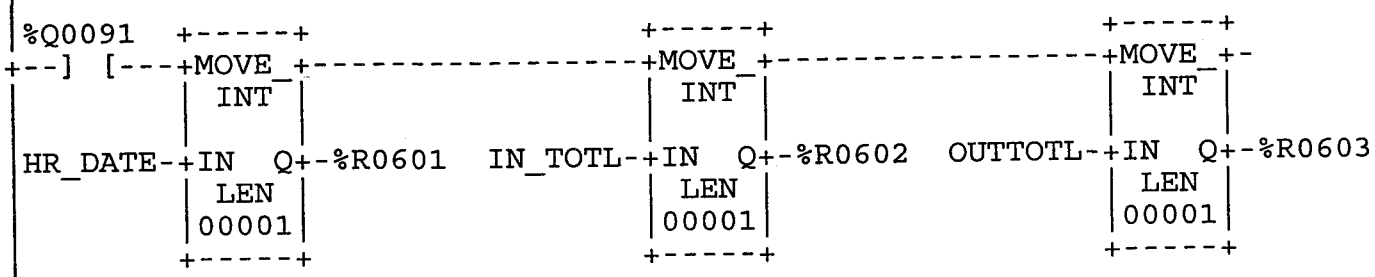

<< RUNG 339 STEP #1383 >>

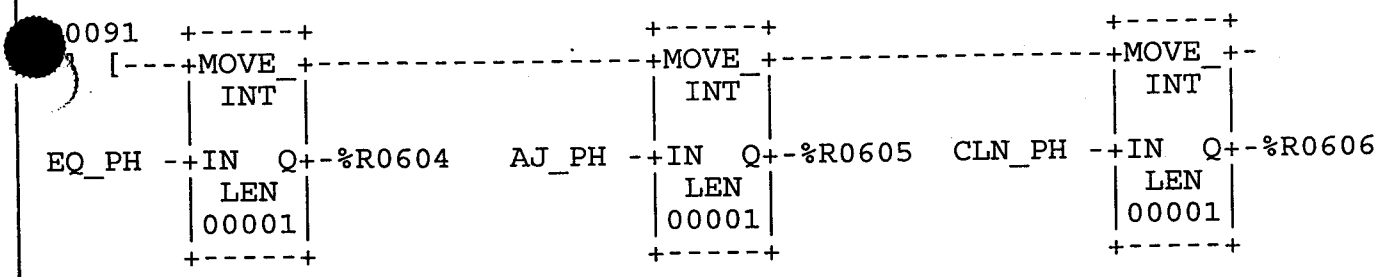

<< RUNG 340 STEP #1387 >>

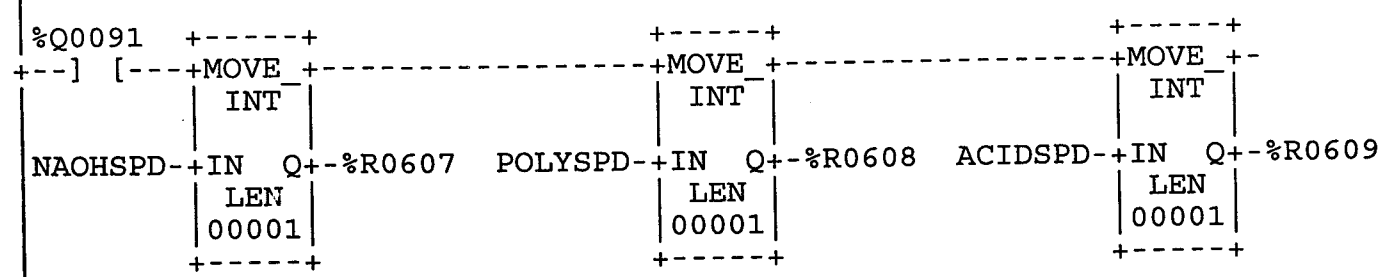

<< RUNG 341 STEP #1391 >>

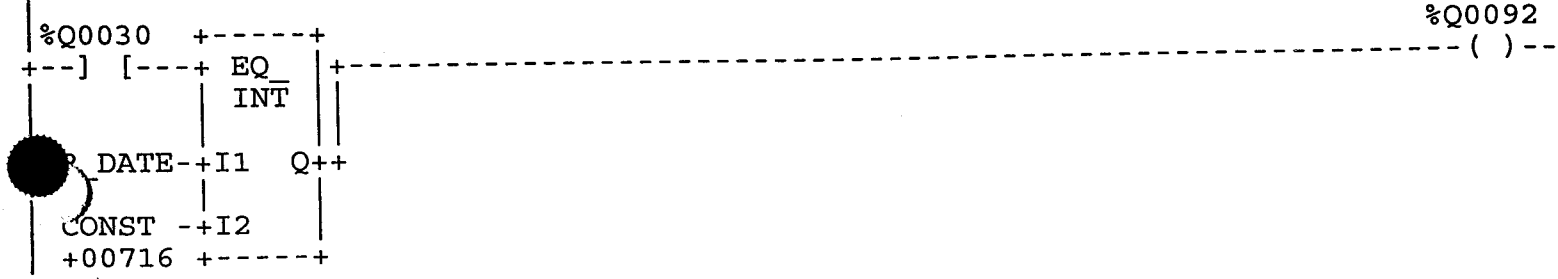

<< RUNG 342 STEP #1394 >>

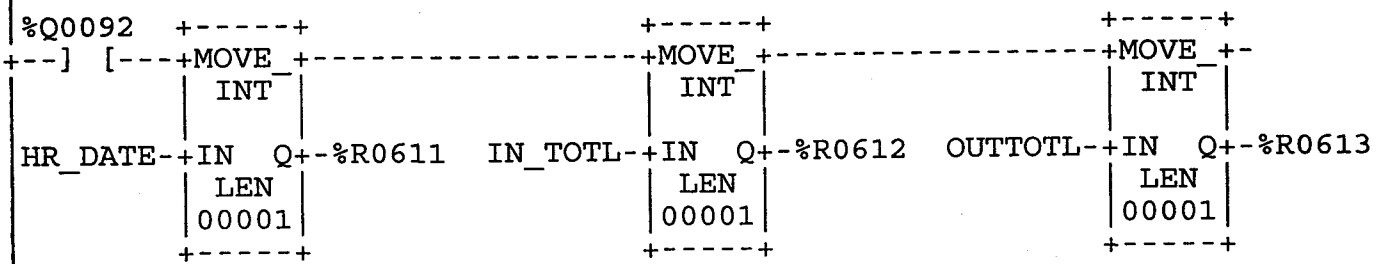

<< RUNG 343 STEP #1398 >>

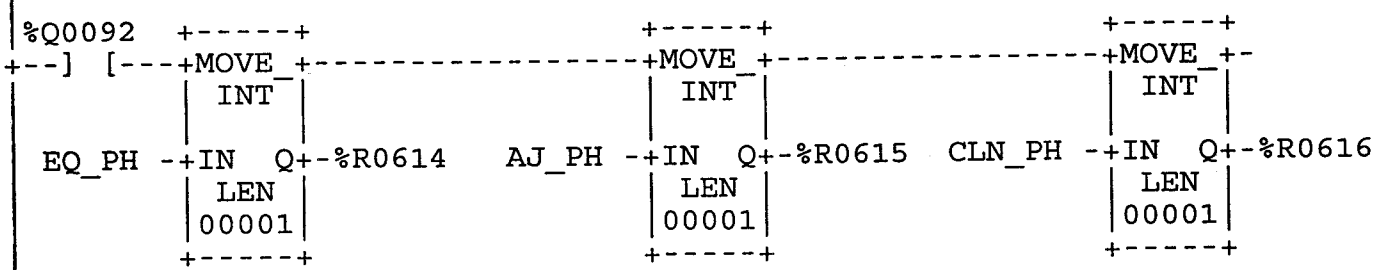

<< RUNG 344 STEP #1402 >>

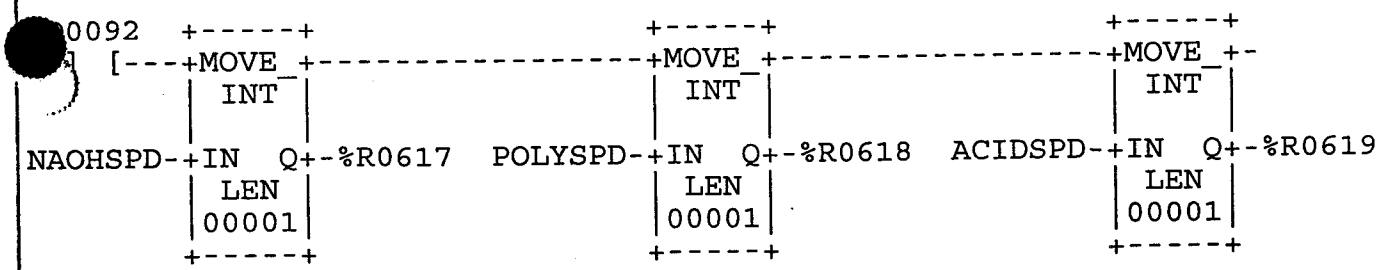

<< RUNG 345 STEP #1406 >>

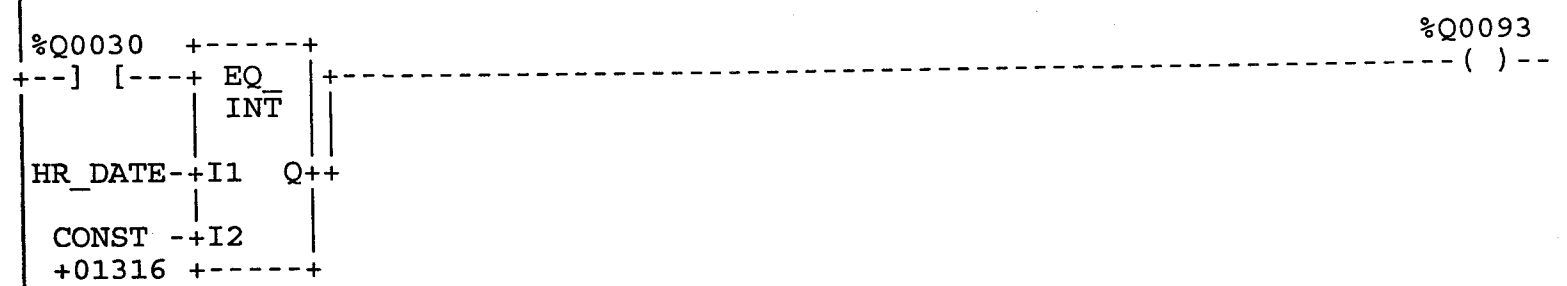

<< RUNG 346 STEP #1409 >>

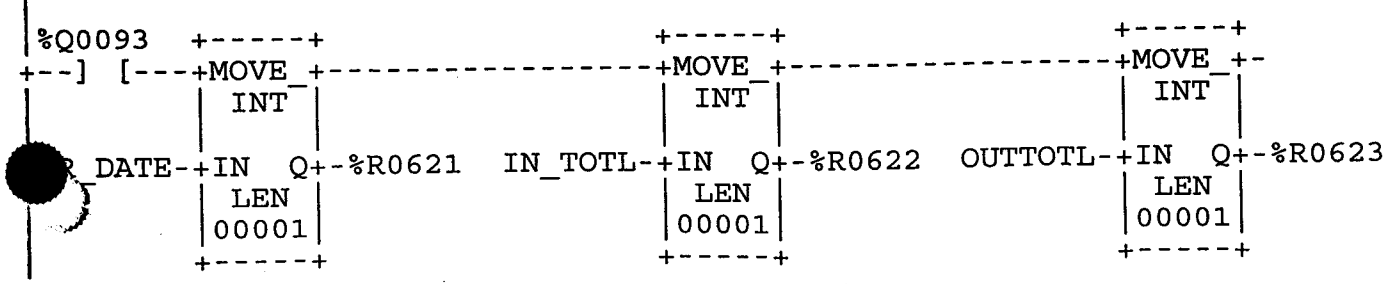

<< RUNG 347 STEP #1413 >>

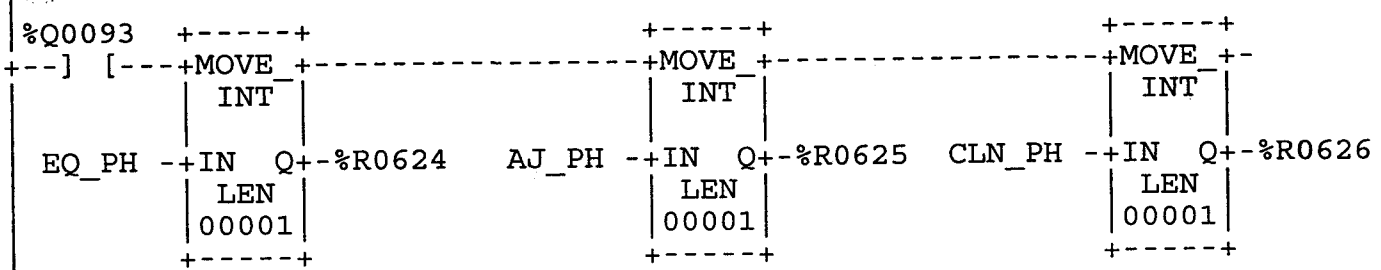

<< RUNG 348 STEP #1417 >>

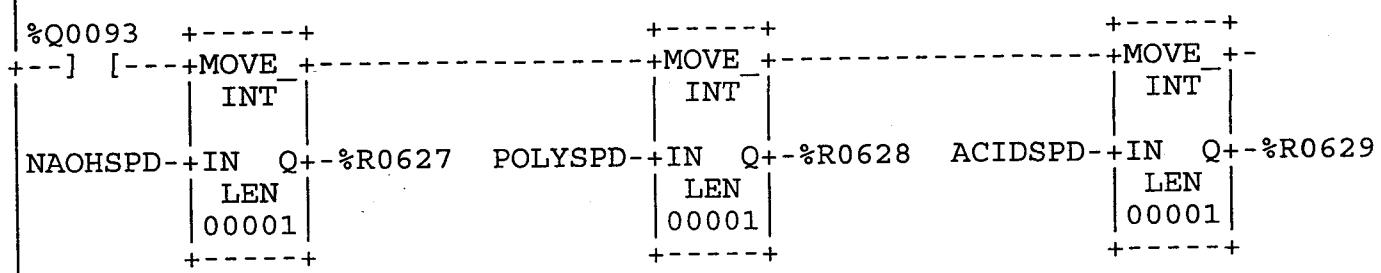

<< RUNG 349 STEP #1421 >>

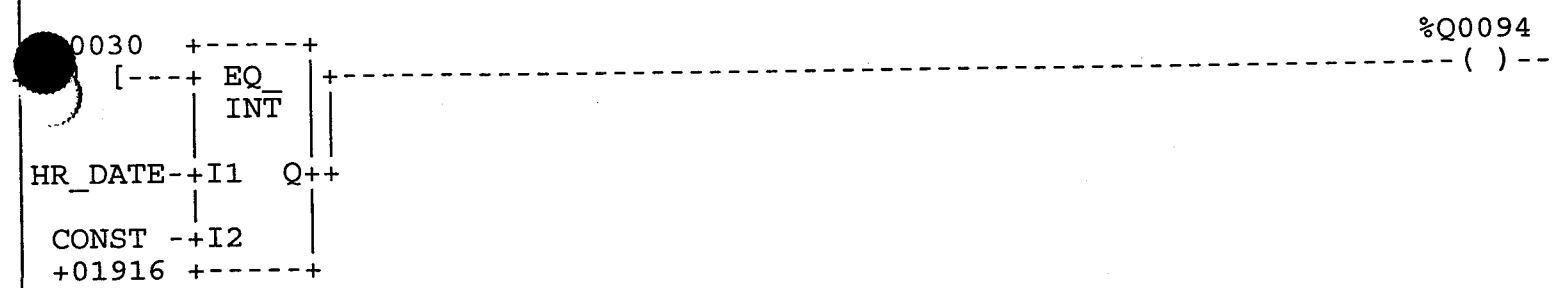

<< RUNG 350 STEP #1424 >>

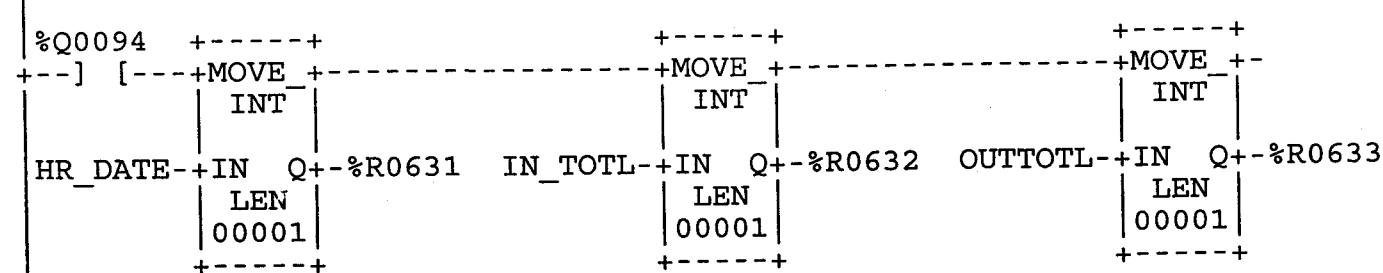

<< RUNG 351 STEP #1428 >>

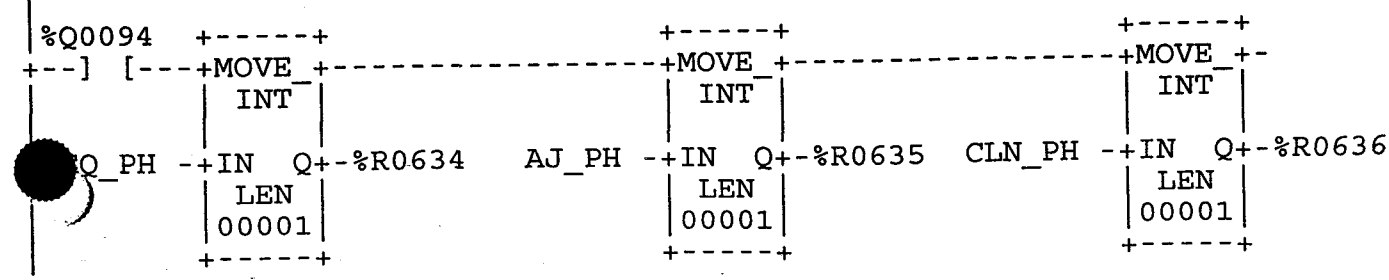

<< RUNG 352 STEP #1432 >>

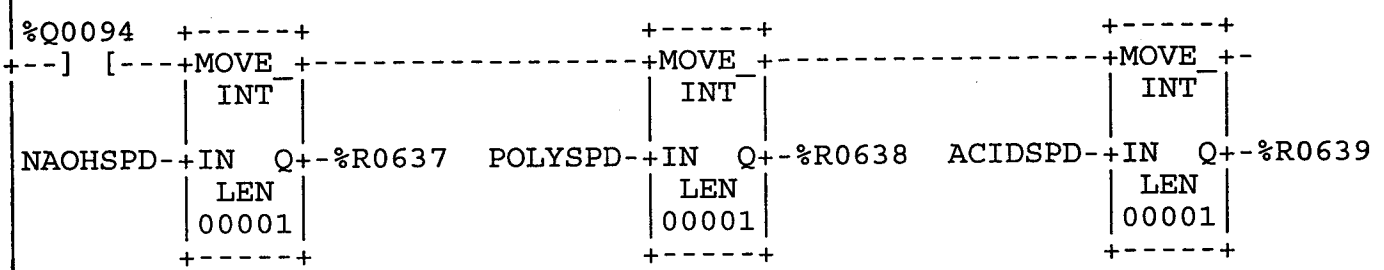

<< RUNG 353 STEP #1436 >>

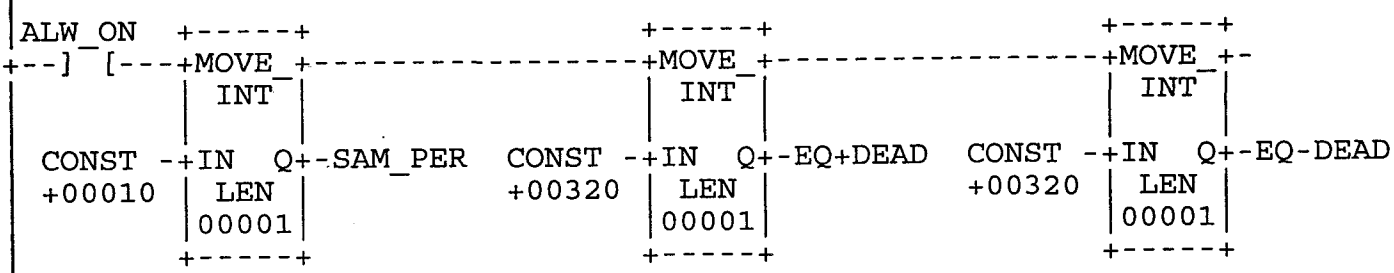

<< RUNG 354 STEP #1440 >>

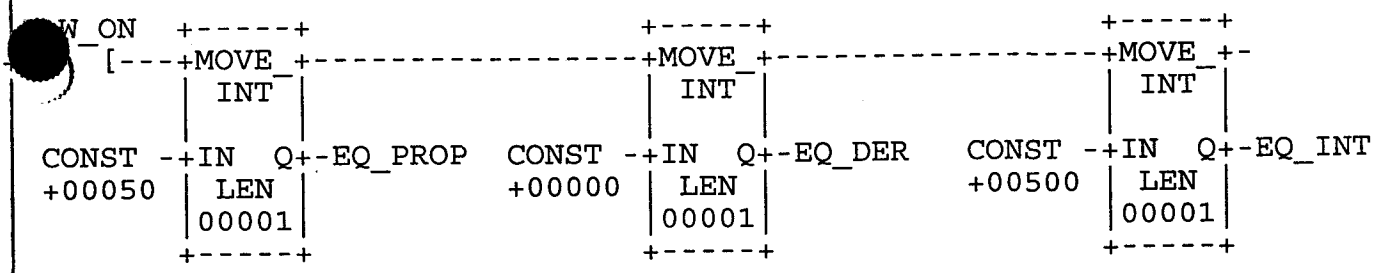

<< RUNG 355 STEP #1444 >>

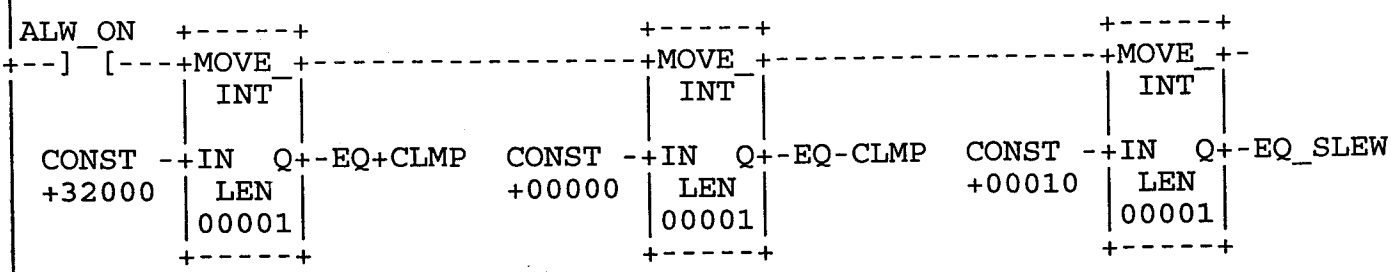

<< RUNG 356 STEP #1448 >>

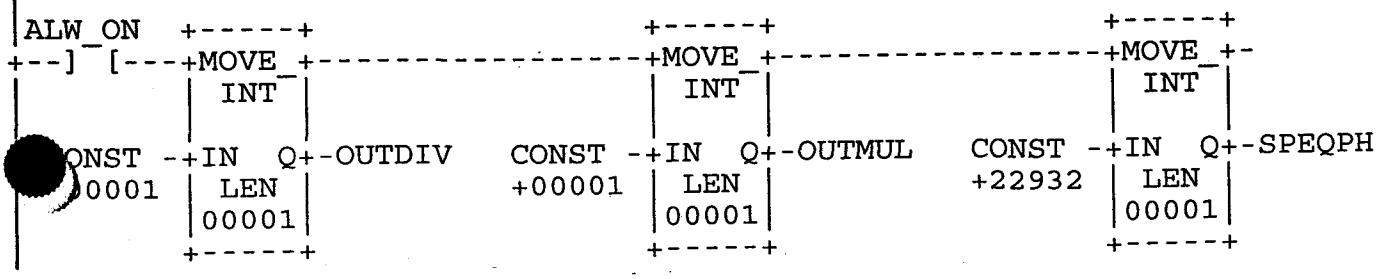

RUNG 357 STEP #1452 >>

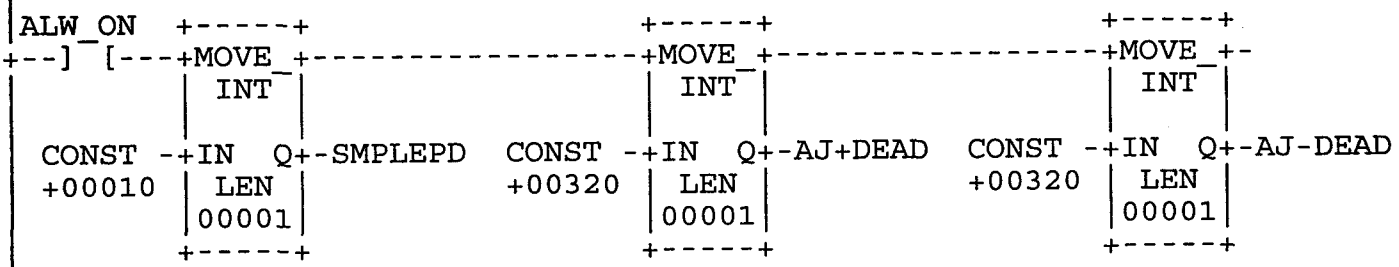

<< RUNG 358 STEP #1456 >>

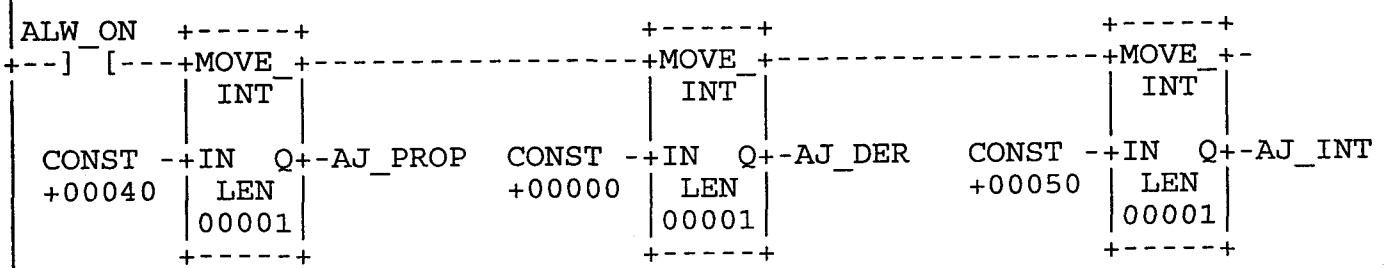

<< RUNG 359 STEP #1460 >>

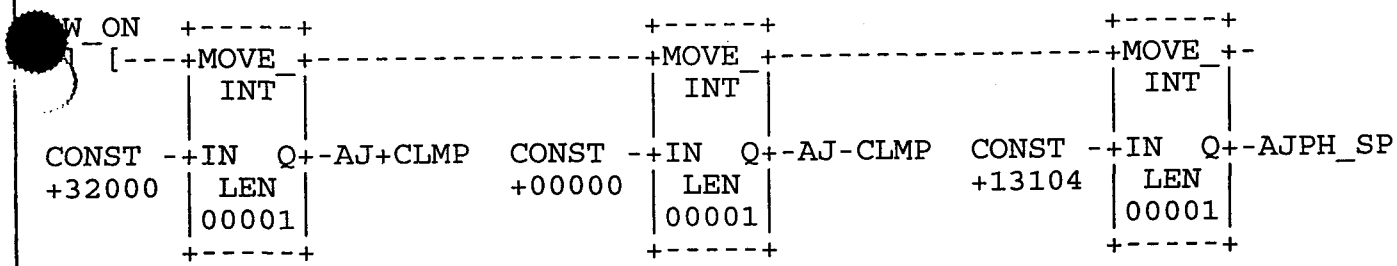

<< RUNG 360 STEP #1464 >>

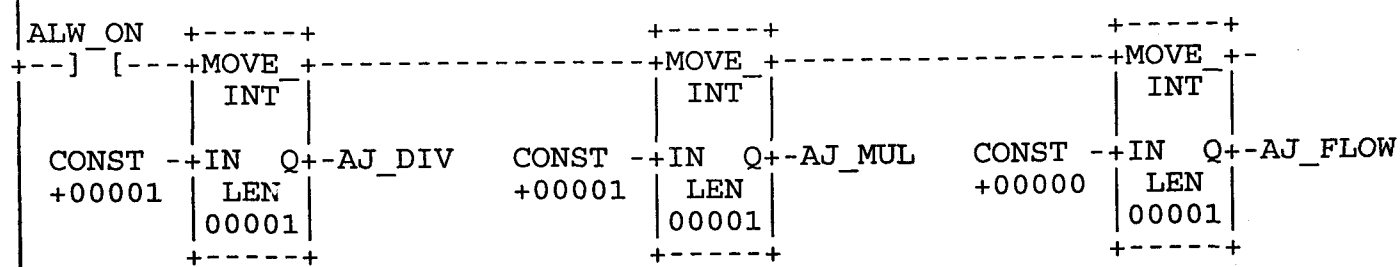

<< RUNG 361 STEP #1468 >>

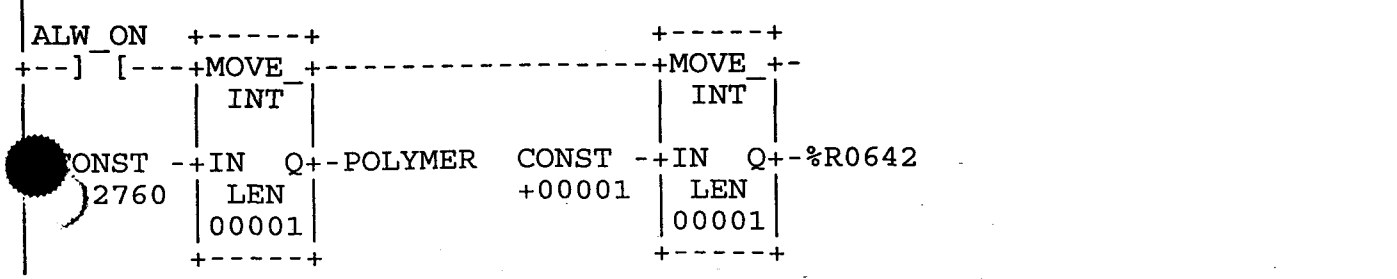

END OF PROGRAM LOGIC]

3.0 SUBMERSIBLE PUMPS

The NAWC Trenton treatment system pumps are all centrifugal submersible pumps with the exception of the Clarifier Sludge Treatment Pump, which is an air-operated double diaphragm pump, and the Chemical Feed Pumps, which are positive displacement, variable stroke metering pumps. There are a total of eight submersible pumps:

- Extraction Well Pump
- Equalization Tank Transfer Pump
- Equalization Tank Recirculation Pump
- pH Adjustment Tank Transfer Pump
- pH Adjustment Tank Recirculation Pump
- Discharge/Backwash Tank Discharge Pump
- Discharge/Backwash Tank Backwash Pump
- Building Sump Pump

Manufacturer's literature for each of these pumps may be found in Appendices A and C.

3.1 EXTRACTION WELL PUMP

The Extraction Well Pump is a Grundfos Model 25S10-7 (see Appendix A) and is located in monitoring well MW-15BR. This pump provides the primary source of water for treatment by the NAWC Trenton system. The Extraction Well Pump is capable of delivering 25 gpm of groundwater to the system. The well in which it is located is equipped with four level electrodes: a reference electrode, a low-low level electrode (system shutdown signal), a low level electrode (pump shutoff), and a high level electrode (pump activator). Groundwater discharged from this pump flows through double-walled schedule 80 PVC pipe through the influent flow meter and into the Equalization Tank.

The Extraction Well Pump will only operate if the following conditions exist:

- Groundwater is above the well low-low level electrode
- Equalization Tank high-high level alarm is not activated
- Sand Filter pressure differential alarm is not activated
- Liquid Phase Carbon Filter pressure differential alarm is not activated
- Bag Filter pressure differential alarm is not activated
- Building sump high-high level alarm is not activated

Flowrate from the extraction well is controlled by manual adjustment of the Extraction Well Pump's discharge globe valve. The flowrate of the Extraction Well Pump may be determined in one of two ways. The first method is to set the globe valve position and record the flowrate measured by the treatment system influent flowmeter. For example, if you allow the pump to run continuously for 10 minutes with the globe valve in one position, and the flowmeter reads 1,000 gallon at "zero" minutes and 1,150 gallons at 10 minutes, you know that you are pumping at a rate of 15 gallons per minute:

$$\frac{1{,}150\ gallons\ -\ 1{,}000\ gallons}{10\ minutes} = \frac{150}{10} = 15\ gpm$$

The second method is to monitor the pump's discharge pressure. By knowing the discharge pressure, the flowrate can be determined from the pump curves (see Appendix A). Note that the density of water is 62.4 lb/ft^3, which equates to 0.433 psi/ft of vertical water column. Therefore, if only head (in feet) is provided on a pump curve, multiplying by 0.433 will give you the associated discharge pressure.

It is important to note that the minimum acceptable flowrate for the Extraction Well Pump is 13 gpm. This pump relies on the water moving past the motor for cooling. Below 13 gpm, insufficient water velocity may result in premature motor failure. This is based on the fact that the pump is located in a six inch diameter well.

3.2 SUBMERSIBLE PUMP CONTROL

The control of each submersible pump in the process (except the building sump pump) is based on the liquid level position as sensed by various level switches in the process. Each discrete level switch (LSLL or LSHH) uses two level electrodes to sense the presence or absence of liquid at the position of the higher electrode. The electrodes use the electrical conductance of the process liquid to make/break an electrical circuit. So, when the liquid contact both the reference and the LSHH or LSLL electrodes, a continuous electrical circuit is made. This circuit is broken when the liquid level fall below the LSHH or LSLL electrode level. A specialized relay is used to sense the state of this circuit. Based on the level (electrical) state, the relay drives a pair of dry electrical normally closed/normally open (NC/NO) contacts, which are then used to turn the pumps on/off.

The well pump and tank transfer pumps are controlled with a specialized relay and three level electrodes: reference, low, and high. In this configuration, the transfer pump will energize when liquid reaches the high level electrode and will de-energize the transfer pump when the liquid level decreases to the position of the low level electrode.

Control of the building sump pump is based on the position of a float riding on top of the liquid in the sump. When the float rises up to a pre-set height, an electrical circuit is completed, which in turn energizes the sump pump. The sump LSHH operates in the same way.

3.3 EQUALIZATION TANK TRANSFER PUMP, pH ADJUSTMENT TANK TRANSFER PUMP, AND DISCHARGE PUMP

Both the Equalization Tank Transfer Pump and the treatment system Discharge Pump are Multiquip Model ST1503-UL pumps (see Appendix C). The pH Adjustment Tank Pump is a Goulds Model 3885 (see Appendix C). Each of these pumps serve the same purpose -- to pump water out of the tank in which they are located to either the next process unit or to the discharge point (ELSA sanitary sewer). The tanks in which each of these pumps are located are equipped with four level probes: a reference probe, a low level probe (pump off), a high level probe (pump on), and a high-high level probe (alarm - imminent tank overflow).

The Equalization Tank Transfer Pump will operate only when the Equalization Tank level reaches the "high" level setting and only if the pH Adjustment Tank "high-high" level alarm is not activated. The pH Adjustment Tank Transfer Pump will only operate when the pH Adjustment Tank level reaches its "high" level setting and only if the Discharge/Backwash Tank "high-high" level alarm is not activated. The Discharge Pump will operate only when the Discharge/Backwash Tank level reaches its "high" level setting and the pH of the tank water, as sensed by the tank pH probes, is between 6.0 and 10.0 standard units.

The Equalization Tank Transfer Pump is equipped with a discharge globe valve and a discharge recirculation globe valve. This arrangement allows for flow control to the Clarifier Unit. The Clarifier Unit

is rated for 25 gpm maximum flow. Without controlling the Equalization Tank Transfer Pump flow rate, a flow in excess of 25 gpm could be seen by the Clarifier. The increased flow rate would decrease the retention time within the Clarifier Unit and thereby reduce Clarifier effectiveness. Flow from the Equalization Tank Transfer Pump will be adjusted via the two globe valves as described for the Extraction Well Pump in Section 3.1. In lieu of a flow meter, the tank level may be gauged to confirm discharge flow.

3.4 EQUALIZATION TANK AND pH ADJUSTMENT TANK RECIRCULATION PUMPS

Both the Equalization Tank Recirculation Pump and the pH Adjustment Tank Recirculation Pump are ABS Model CD10W pumps (see Appendix C). These pumps simply pump water in their respective tanks and discharge that water within the same tank. This disturbance provides nearly continuous mixing of tank contents. Both the Equalization Tank and the pH Adjustment Tank receive chemical addition (caustic and acid, respectively) directly into the tank. The recirculation pumps aid in distribution of added chemical throughout the tank contents. Both of these pumps run continuously if the treatment system is in the "run" mode and the tank level is not below the "low" level used to shut off the respective tank's transfer pump.

3.5 BACKWASH PUMP

The Backwash Pump is an ABS Model JUMBO-31WHH (see Appendix C). This pump was sized to be capable of backwashing the treatment system Sand Filter. It is not anticipated that the Liquid Phase Carbon Adsorption Units will require backwashing prior to breakthrough and subsequent changeout. The Backwash Pump may only be enabled if the Extraction Well Pump is off, the Equalization Tank is at its "low" level, and the level within the Discharge/Backwash Tank is at its "high" level point. The Backwash Pump will shut down when either the Equalization Tank reaches "high" level or the Discharge/Backwash Tank reaches "low" level.

3.6 BUILDING SUMP PUMP

The Building Sump Pump is a Multiquip Model ST2005-UL (see Appendix C). The discharge from this pump is piped into the Equalization Tank. Pump operation is controlled by a float and level switch within the building sump.

3.7 TROUBLESHOOTING/MAINTENANCE

3.7.1 Alarm Troubleshooting

Several "alarm" or abnormal conditions may arise which the system operator should be able to analyze and remedy to minimize system down time. Some examples of "alarm" conditions and associated remedies or causal conditions are presented below:

Alarm	Cause	Remedy/Condition
Extraction Well, Tank High-High Level, or Sump High-High Level	Pump not running	Motor overload tripped Pump in OFF position Downstream tank liquid at high-high level
	Incorrect pump discharge flowrate	Check manual flow control valve adjustment
	High influent flow	Flow to tank above transfer pump capacity
	Pump running, low discharge flow	Check manual flow control valve position

Extraction Well Low-Low Level; Low System Influent Flow	No flow	Well low, sump low, system to auto
	Low or erratic flow	Check PLC control parameters Check well pump discharge line for blockage

Additional, more pump-specific, troubleshooting data are presented in the various manufacturers' operation and maintenance literature. For the Extraction Well Pump, this information is provided in great detail at the beginning of Appendix A, pages 8 through 10 of the Grundfos O&M Manual. For the remainder of the system submersible pumps, manufacturers' detailed troubleshooting information is provided in Appendix C.

3.7.2 Routine Maintenance

Submersible pumps require minimal maintenance, particularly when they are pumping clean, cool fluids, such as groundwater. The manufacturers' suggested maintenance requirements and spare parts are summarized below:

Submersible Pump ID	Recommended Routine Maintenance	Spare Parts
Extraction Well Pump	None listed	None listed
Equalization Tank and pH Adjustment Tank Recirculation Pumps	• Change Lubricating Oil (once per year) • Clean Inlet Strainer (once per year)	None listed
Equalization Tank Transfer Pump, Discharge Pump and Sump Pump	• Cable Breakdown Check (once per year) • Insulation Check (once per year) • Check Lubrication Oil (once per year)	None listed
Backwash Pump	• Change Lubricating Oil (once per year) • Clean Inlet Strainer (once per year)	None listed
pH Adjustment Tank Transfer Pump	• Change Lubricating Oil (once per year)	None listed

4.0 CLARIFIER

The Clarifier Unit treats the incoming groundwater for removal of metal contaminants via precipitation and flocculation. The incoming flow has been combined with sodium hydroxide for pH adjustment and a polymer flocculating agent for agglomeration of suspended particles prior to flowing into the Clarifier Unit.

Sodium hydroxide is mixed with the influent groundwater directly in the Equalization Tank. Sodium hydroxide is supplied via the Caustic Metering Pump which draws from the Caustic Solution Tank. Sodium hydroxide addition is regulated through the use of a pH probe which measures Equalization Tank water pH. The measured pH is interpreted by the PLC which in turn sends a signal to the Caustic Metering Pump for adjustment of the pump speed.

Polymer/flocculent is added to the influent flow to the Clarifier Unit's flash mix chamber. The flocculent is supplied via the Polymer Metering Pump which draws from the Polymer Mix Tank. Polymer addition is regulated by automatic adjustment of the speed of the Polymer Metering Pump.

Within the Clarifier Unit, the process water first passes to a flash mix chamber where the process water and polymer are thoroughly mixed. The flow is then passed through a flocculating chamber where it is allowed to slow mix, building a strengthened floc. It is then routed to an inclined plate separator section for settling of solids. The liquid flow passes up through the inclined plates where the solids agglomerate and settle to the sludge collection chamber. The metals-containing sludge is pumped on a timed basis (as programmed in the PLC) from the bottom of the Clarifier Unit, via the Sludge Transfer Pump, to 55-gallon drums for off-site disposal.

4.1 OPERATION

The clarifier system includes control of the flash and floc mixers and the Sludge Transfer Pump. This section contains a description of the system equipment associated with the clarifier. For more detailed information on the Clarifier Unit, refer to the manufacturer's literature included as Appendix E. For more detailed information on the Sludge Transfer Pump, see Appendix F.

4.1.1 Flash and Floc Mixers

The flash mixer is located in the first chamber of the Clarifier Unit. The process water enters at the side of this chamber and the polymer flocculent enters through an injection port within the inlet line immediately prior to penetration of the side of the flash mixing chamber. The flash mix chamber provides turbulent mixing to rapidly disperse the concentrated polymer. The flash mix chamber is followed by the flocculation chamber, which provides gentle agitation with minimal turbulence. The flocculation chamber establishes optimum conditions for particle agglomeration prior to entering the clarifier.

The agglomerated masses are not subjected to turbulent conditions after formation in the flocculation chamber. When the waste stream carrying the suspended flow exits the flocculation chamber, it travels directly into the mid zone of the clarifier. Upon entering the clarifier, the influent is evenly distributed into the plate packs onto which the floc will settle. After enough material has settled on the plate packs, the combined mass of the floc causes a movement to the sludge holding section of the clarifier. The slant plate clarifier is designed to provide an influent velocity low enough to permit flocculated particles adequate time to settle on the slanted plate. The slant plate clarifier relies on a mass movement differential, where the area on which the particles settle is the separation distance between the plates, and therefore makes the slant plate clarifier more efficient.

Flocculation can be enhanced by a higher suspended solids content. This may be increased by returning a portion of the sludge to the flocculation section. This is commonly referred to as "seeding". The system is not currently set up for seeding; however, the Clarifier Unit manufacturer may be contacted to incorporate seeding of the system.

4.1.2 Underflow Adjustment

During normal operation of the clarifier, remove a 1000 ml sample of wastewater from the flocculation tank in a graduated beaker. Immediately place the sample beaker on a flat surface and begin timing for 15 minutes (approximate retention time of the clarifier). At the end of 15 minutes, observe the amount of sludge (not water) in milliliters contained in the sample. Now apply the data collected to this equation:

$$\frac{\text{ml of sludge}}{\text{ml of sample}} \times 100 = \text{percent sludge}$$

$$\frac{\text{percent sludge}}{100} \times \text{total flow (gpm)} = \text{percent underflow (gpm)}$$

The Sludge Transfer Pump should be adjusted for this removal rate.

4.1.3 Clarifier Sludge Transfer Pump

The Clarifier Sludge Transfer Pump is used to pump the settled sludge from the Clarifier Unit to 55-gallon drums for storage prior to off-site disposal. Its operation is controlled by a timer cycle set up through the PLC. The Sludge Transfer Pump is an air-operated diaphragm pump whose discharge flowrate is adjusted by varying the air pressure to the pump. This is done by an adjustment of the pressure regulator at the pump. The flowrate must be adjusted so that the Sludge Transfer Pump is pumping fast enough to prevent excessive sludge buildup in the cone of the Clarifier Unit, yet slow enough that it is not transferring an excess of water along with the sludge. Adjustments to the Sludge Transfer Pump's flowrate may be based upon inspection of sludge extracted from various sample ports located along the cone of the Clarifier Unit (three sample ports at three different elevations).

The Sludge Transfer Pump is also equipped with a process inlet control valve (air-operated) to prevent siphoning of sludge to the drums after shut down of the Sludge Transfer Pump. This valve opens along with the air supply valve to the double diaphragm pump, and closes when the air supply valve for the double diaphragm pump closes.

Information on the Asco Red-Hat Solenoid Valves is provided at the end of Appendix F.

4.2 TROUBLESHOOTING/MAINTENANCE

This section contains both basic troubleshooting techniques and maintenance procedures. For complete details on equipment maintenance, refer to Appendix E, Section 3.0 of the Clarifier manufacturer O&M Manual. For a complete troubleshooting guide, refer to Appendix E, Section 7.0 of the Clarifier manufacturer O&M Manual. Also note that Appendix E contains separate O&M data, including troubleshooting and maintenance procedures, for the flash mixer, gear reducer, flocculator, etc. associated with the Clarifier Unit. These procedures should be reviewed closely before troubleshooting or performing maintenance activities.

4.2.1 Basic Maintenance and Troubleshooting

The Clarifier Unit will operate with little more than preventative maintenance, meaning keep it clean. There is the possibility of floating sludge accumulation in the sections between the plate packs. A small amount of this is normal and should be skimmed off after forming a layer. If this occurs often, there may be air or oil becoming entrained in the floc. Should this be the case, the source of the contamination must be found if the clarifier is to operate properly.

The weirs should be kept clean of trailing floc. The flow distribution holes can be blinded if the weirs are not cleaned. This will cause uneven flow characteristics which will upset the efficiency of the clarifier.

Every six months to one year, the Clarifier Unit should be emptied and the lamella plates inspected. If they have no apparent damage of build-up of sludge on them, refill and begin operation. It would be a rarity for there to be any damage to the slant plates, but it is necessary to check. A scale build-up of material can make the sludge stick to the plates instead of sliding into the sludge storage area.

If the Sludge Transfer Pump is not run frequently enough, there is the possibility of a sludge accumulation to a level where the plates are blinded. This will cause floc to travel through the plate packs, over the weirs, and into the effluent line. A clarifier failure of this type can be eliminated by simply increasing the operating time of the sludge pump through the PLC. A quick indicator of this problem would be a buildup of solids in the pH Adjustment Tank.

4.2.2 Spare Parts

The following spare parts are recommended by the manufacturer:

- Flash mixer drive
- Floc mixer drive
- Rake drive
- Lovejoy L095 3/4-in. coupling
- Lovejoy L095 1-1/8-in. coupling
- Martin 6018 2-in. coupling
- Martin 6018 1-1/2-in. coupling

4.2.3 Maintenance Schedule

Perform a weekly inspection of the clarifier flocculator. Observe the floc quality and make adjustments to the polymer addition rate. Observe the sludge level in the clarifier and adjust the sludge pump-off rate as required. Verify that the correct operating pH is being maintained in the Equalization Tank.

Clean and calibrate the pH probes on a monthly basis.

5.0 SAND FILTER

The Sand Filter is provided to remove solids which may carry over from the Clarifier Unit. It is located in the process stream between the pH Adjustment Tank and the Dual Bag Filter Units. The amount of solids that should pass through this unit under normal operating conditions should be minimal; however, having the Sand Filter present will extend the life of the Bag Filters.

5.1 OPERATION

The filtration system consists of one multi-media filter which is used for removing suspended solids from the process water stream. This media consists of a bottom layer of gravel and an intermediate and top layer of sand, giving in effect a series of filtration steps and allowing retention of substantial amounts of solids before developing an increase in the pressure drop across the filter. The distributor that is located in the bottom layer of gravel inside the filter provides a uniform, efficient collection of water during filter operation. This distributor collects outgoing water during service operation and dispenses incoming water during backwash operation. The collection system features a hub and lateral V-slot screen to minimize plugging V-slots during service. The filter housing consists of a 250-gallon polyethylene lined, fiberglass wrapped Envirotrol LP-250P vessel. The filtration media supplied is gravel (six cubic feet) and filter sand (six cubic feet), for a total of twelve cubic feet of media.

Also of note is that the Sand Filter has been equipped with a pressure relief valve. As the vessel is rated for 150 psi, the relief valve has been selected for relieving at 150 psi. This will prevent overpressurization and possible failure of the unit.

5.2 TROUBLESHOOTING/MAINTENANCE

Appendix G of this O&M Manual provides the manufacturers' data on the Sand Filter Unit. The unit has no moving parts and no lubrication requirements. A pressure differential switch located at the unit senses the pressure drop across the unit. If this pressure drop becomes excessive (greater than 5 psi more than the pressure drop registered during "clean" startup), then the filter must be backwashed. Valves are already in place to allow for sand filter backwash. Backwash flow would proceed from the Backwash Pump discharge, through a hose connection between the discharge and the backwash inlet at the Sand Filter, through the Sand Filter Unit, through a hose connection between the sand filter backwash outlet to the Equalization Tank, and into the Equalization Tank through the backwash inlet line. Hose connections have been established versus hard-piped connections based on the probable modifications to the treatment system over the long term and due to the anticipated infrequency of Sand Filter backwashing. Further instructions on backwashing of the Sand Filter are provided in Appendix G. The recommended backwash rate for the LP-250P adsorber is 50 to 100 gpm.

Beyond routine backwashing of the Sand Filter Unit, no other maintenance is recommended by the manufacturer. Also, no spare parts are listed.

6.0 DUAL BAG FILTERS

The Dual Bag Filter Units are designed to remove any suspended solids in excess of five micrometers from the Liquid Phase Carbon Adsorption Unit influent stream. Solids buildup in the carbon filters can:

- Reduce the performance of the carbon filters
- Necessitate early carbon changeout
- Result in overpressurization of the carbon filters

Five micron filter bags are used at the NAWC Trenton groundwater treatment facility. The filter bags are supported by stainless steel baskets with 9/64-inch diameter perforations. Each of the two Bag Filter Units are the Model PF180 provided by Progressive Equipment Corp. The Model PF180 is designed to accept flow rates up to 200 gpm. The basket is 30 inches deep and pressure rating of the vessel is 150 psi. The vessels are equipped with pressure relief valves to prevent overpressurization of the units.

The filter system is composed of two single-basket filter vessels joined by a PVC manifold system, which includes an automatic bypass system. Water is processed through a single filter vessel at a time.

Each Bag Filter Unit is equipped with an automatic 3-way valve and sentinel duplex alarm. This system works based on the pressure differential across the Bag Filter Unit in service. For instance, if unit one is in service, and the pressure differential across the filter is in excess of the setpoint, the 3-way valve will be activated and switch flow to unit two and the sentinel alarm will be activated to notify the operator that unit one's bag filter must be changed. The sentinel remote alarm is factory set to both audibly and visually alert operations personnel to the need to replace the filter bag at a 5 to 7 psi pressure drop across the unit.

6.1 START-UP AND OPERATION PROCEDURE

The housings have a pressure rating of 150 psi. AT NO TIME exceed this operating pressure. Serious injury or death could result if this limit is exceeded. The bag filter system is equipped with a pressure relief device to prevent vessel overpressurization. Always make sure this device appears undamaged and in good working order prior to system startup.

Hydrostatically test unit with clean water prior to operation to determine if there are any leaks in the system. Follow directions below for initial closing of vessel lid.

1. Prepare each filter by placing a 5 micron bag in the housing unit, making sure the bag is correctly seated in the housing as outlined in the changeout procedures.

2. Close vessel lid according to initial closing instructions outlined below.

3. Turn on sentinel bypass system. The sentinel alarm will indicate "normal" operation and low through the "filter." During initial start-up, have an experienced electrician manually cycle the system according to the Automatic Bypass Operating Instructions provided in Operations and Maintenance Manual (Appendix H).

4. Changeout bag filters per changeout instructions when sentinel alarm sounds, indicating that the differential pressure has reached 5-7 psig, or as necessary.

5. Once the filter is ready to resume filtration, press the reset button on the sentinel system.

6. If pressure drops suddenly, shut down process, depressurize vessel, and check filter bags for proper seal or rupture.

6.2 PROCEDURE FOR INITIAL LID CLOSING

1. Insert basket into seat. The basket rim flange must cover entire opening.
2. Insert filter bags, making sure that the bags are properly seated.
3. Inspect gasket groove and gasket. If gasket is nicked or worn, replace prior to continuing.
4. Insert gasket, making sure gasket is not twisted and is inserted properly in gasket groove.
5. Position lid on unit with lid nuts unscrewed far enough to allow the lid to rest on the gasket freely and parallel to the vessel collar plate.
6. Engage all bolts. Hand tighten nuts.
7. Tighten nuts according to torque chart included as Figure 1.5.4.A in Appendix H, rotating around vessel until tight.
8. Close vent valve.
9. Open outlet valve.
10. Turn pumps on following pump start-up instructions.
11. Open inlet valve slowly and watch for leaks. If leaks are detected, close inlet valve, depressurize vessel and retorque bolts. If vessel leakage continues, contact Progressive Equipment Corporation.

6.3 FILTER BAG CHANGEOUT PROCEDURE

1. Release unit pressure using vent valve on top of unit.
2. Check pressure gauge to make sure that the vessel's internal pressure is zero psig.
3. Drain fluid from vessel by gravity flow through drain valve.
4. Close drain valve.
5. Loosen lid nuts and pop cover up.
6. Swing nut and bolts free of lid.
7. Lift the lid and rotate off of vessel.
8. Lift the filter basket and remove bag from the housing.
9. Inspect basket. Make sure basket and bag bearing surfaces are clean and free of nicks. Make sure basket flange is in good condition.
10. Replace bag and re-insert basket into housing. Make sure bag is properly seated.
11. Inspect gasket. Replace gasket if it is worn or nicked.
12. Rotate lid over vessel and align bolt and nut brackets.
13. Engage all bolts. Hand tighten nuts.
14. Tighten nuts according to torque chart included as Figure 1.5.4.A in Appendix H, rotating around vessel until tight.
15. Open effluent valve.
16. Open vent valve on top of unit.
17. Slowly open influent valve and let water fill bag filter until water flows out of vent valve.
18. Close vent valve.
19. Check for leaks and repair accordingly.
20. Open influent valve fully.
21. Discard spent bag filters to hazardous water roll-off

Please refer to Progressive Equipment Corporation's Installation and Operation Manual, included as Appendix H, for more detailed operating instructions.

6.4 TROUBLESHOOTING/MAINTENANCE

Periodically lubricate filter o-ring seals, as needed, with a silicone base grease for easier seal and longer life of the filter units.

Recommended spare parts include the main cover seal (2 total) and a spare fuse for the sentinel alarm.

Approximately half way through Appendix H, Progressive Equipment Corp. has provided a troubleshooting guide titled "Common Process Water Problems". This should be referenced by operator personnel if there is a system problem such as biological growth on the filters or excessive filter clogging, etc.

7.0 LIQUID PHASE CARBON UNITS

Two
~~Four~~ Liquid Phase Carbon Filters are provided in series to remove liquid phase adsorbable organic and inorganic contaminants from the process water stream. These adsorption units are protected from suspended solids fouling by the upstream Sand Filter Unit and Dual Bag Filter Unit. The Carbon Filters are arranged in series to allow maximum removal of contaminants as well as utilization of carbon. The clean water product from the system is accumulated in the Discharge / Backwash Tank for ultimate discharge to the ELSA sanitary sewer. The carbon filters function as polishing units downstream of the air stripper.

7.1 OPERATION

Two
~~Four~~ 10,000-lb capacity carbon vessels (Calgon Model 7.5) are present in the treatment building. All two ~~four~~ units are being utilized in series to provide the maximum protection against discharge exceedences. Each vessel is constructed of carbon steel with a Plasite 4110 tank lining. They are each 7 ft. - 6 in. in diameter and 7 ft. - 8 in. high. If backwashing were to be expected, then each vessel would be provided with 6,500 lbs of carbon. However, based on startup operation data, it appears that carbon breakthrough will occur prior to requiring backwash; therefore, up to 10,000 pounds of carbon may be placed in each vessel. There are two dual cell skid-mounted units in the treatment building. The vessels came complete with underdrain, face piping, carbon transfer piping and sample and instrument connections. The adsorption system is operated in a downflow mode with the granular carbon beds in a series configuration. Flow is directed into the top of the first vessel (lead adsorber) and flows down through the carbon. From the bottom of the lead adsorber, the stream flows into the top of the second adsorber (cell 2). Effluent from cell 2 flows from the bottom of cell 2 ~~to the top of cell 3, through cell 3, out the bottom of cell 3 into the top of cell 4, and out the bottom of cell 4~~ into the Discharge/Backwash Tank.

Initially, the contaminants are adsorbed onto the carbon in the upper portion of the lead bed. As this top layer of carbon becomes saturated, adsorption takes place lower in the bed. Eventually, all the carbon in the lead adsorber becomes saturated and the contaminant concentration of the effluent from the adsorber increases until it approaches or equals the influent concentration. When the carbon in a vessel is exhausted, a carbon changeout should be arranged.

The specific contaminants of concern at the NAWC Trenton site are vinyl chloride, trichloroethylene (TCE) and 1,2-cis-dichloroethylene (DCE). Though TCE and DCE are readily adsorbed onto carbon, vinyl chloride is adsorbed only under the best conditions. Vinyl chloride will initially be adsorbed onto the carbon in a clean cell. However, over time, as adsorption sites are taken by vinyl chloride, TCE and DCE, TCE and DCE will begin to displace the previously adsorbed vinyl chloride from the carbon as the contaminants compete within the adsorber. Therefore, vinyl chloride will be the first contaminant to break through and will serve as the indicator compound.

The standard mode of operation is therefore to monitor the discharge of the lead cell twice a week for vinyl chloride. Upon detection of vinyl chloride in the effluent from the lead cell, a carbon changeout is to be ordered through Calgon. In the meantime (approximately one week from notification to actual carbon changeout), the lead cell will be kept in service to continue to remove DCE and TCE, and monitoring of the effluent from cell 2 will now begin twice a week.

After changeout of the lead cell, it will become cell 2, cell 2 will become the lead cell, ~~cell 3 will become cell 2 and cell 4 will become cell 3~~ in the series sequence. Normal operation of the carbon system will include removing spent carbon, adding new carbon, and setting up the desired flow direction.

7.2 MAINTENANCE

The Liquid Phase Carbon Units utilize manual valves to control and divert the flow through the vessels. Operation of the carbon system will require regular tests of the process water exiting the lead cell to determine when breakthrough occurs and when carbon replacement is required. The pressure drop across the carbon bed should also be regularly checked to determine if and when backwashing is required. Pressure gauges are provided to measure the pressure drop across each bed. Each carbon bed is fitted with a differential pressure switch, which shuts the process down if the difference between the inlet and outlet pressure of the bed exceeds 18 psi. Pressure drop through an adsorber system is a function of the following factors:

- Pressure drop through the carbon bed(s)
- Nozzle and piping pressure drop
- Mode of operation (series or parallel)
- Flow rate, viscosity, and density of the liquid (process water)
- Solids build-up on top of the bed
- Bacteria growth or chemical precipitation in the bed
- Gas build-up in the bed

Backwashing/backflushing is usually required when the pressure drop across an adsorber increases by 5 to 10 psi during the adsorption cycle. Note that the backwash pump provided in the Discharge/Backwash Tank has been sized to backwash the Sand Filter, not the Carbon Units as backwashing should not be required prior to carbon changeout.

To prevent damage to the system in the event that the pressure limitation of the vessels is exceeded, pressure relief devices are provided in the adsorber vent lines. The NAWC Trenton units have been provided with a graphite rupture disk rated for 75 psi burst pressure.

More details regarding unit operations, startup of new and regenerated carbon vessels, and backwashing/changeout procedures have been provided by Calgon in Appendix R.

7.2.1 Carbon Changeout Procedure

Calgon's standard transfer tank is sized to hold 10,000 pounds of spent carbon, which is an amount equal to one charge of carbon from an adsorber. This tank is provided to facilitate carbon transfer operations and eliminates the need for an empty bulk trailer.

The spent carbon is transferred from the adsorber to the bulk trailer by first filling the adsorber with water. The adsorber is then pressurized using compressed air as the motive force to facilitate the carbon transfer to the trailer. If the treatment system air compressor is taking an excessive amount of time to pressurize the carbon cell, connection to the pressurized air system "on Base" at the NAWC Trenton may be arranged through the Base representative. It will also be necessary to add water to the adsorber to ensure that all of the spent carbon has been removed form the adsorber. During the last five minutes of the transfer, open the plant water valve. This flow of water will flush the carbon heel off the sides of the adsorber and into the bottom of the vessel.

Once the spent carbon transfer operation is completed, a charge of fresh carbon can be transferred into the empty adsorber. This is accomplished by filling the bulk trailer with water and placing a water cushion in the adsorber. The bulk trailer is then pressurized with compressed air to facilitate carbon transfer into the adsorber. If the volume of water provided through the potable water system connections within the treatment

building is insufficient for a timely changeout of carbon, use of a backflow preventor and fire hose connected to an on-Base fire hydrant may be coordinated with the Base representative.

Further details on carbon transfer procedures may be found in Section 4.0 of Appendix R.

The step-by-step changeout process is provided below:

SPENT CARBON TO TRAILER

1. Shut off all valves, isolating each carbon cell.

2. Fill carbon cell to top with water via water inlet line (open V-17 to allow water into cell). Cell must be completely full of water before attempting to transfer carbon. Water level can be monitored via the air inlet line. When the cell is full, water will exit the air line.

3. Connect chemical hose to carbon exit line (V-15/V-16) and garden hose to small open fitting on carbon exit line.

4. Connect compressor air line to air inlet valve (V-11). Adjust air compressor regulator to approximately 30 psi.

5. Open air line and allow air to enter the carbon cell valve, monitoring cell pressure via pressure gauge on the cell.

6. When air pressure has reached approximately 10 psi:

   a. Turn on garden hose.
   b. Open carbon exit line.
   c. Continually monitor air pressure (should never exceed 20 psi).
   d. Truck driver should constantly monitor flow of carbon to ensure no clogs in line.

7. Approximately every 15 minutes, water inlet line should be opened for approximately 10-15 seconds in order to wash down any residual carbon clinging to sides of cell.

8. When transfer is complete (approximately 45 minutes to 1 hour), hose will jump from air entering with water (also will note a quick drop in air pressure).

9. Close carbon exit line and open water inlet line to wash down heel of carbon in tank (open water approximately 2 minutes). Close water.

10. Allow pressure to rise to approximately 8-10 psi and open carbon exit line to wash out remaining carbon.

11. Relieve cell pressure, drain cell, and open side manway.

12. Follow confined space entry procedures (see HASP) to inspect vessel interior to ensure that all spent carbon has been removed.

13. Close manway and fill empty cell with approximately 2 feet of water to cushion influx of carbon to avoid damage to piping on bottom of cell (open water inlet approximately 10 minutes to accomplish this).

14. Truck will then dewater spent carbon in truck into sump pit. Sump pump will transfer wastewater to equalization tank. Inspect sump pit to remove any carbon carryover.

NEW CARBON TO CELL

1. Fill carbon compartment on tractor trailer with water.

2. Connect air pressure line to air inlet on truck and chemical hose from truck to carbon inlet line (V-14). Connect garden hose to fitting on truck.

3. Connect chemical hose from carbon cell and run end of hose to the sump pit.

4. Allow pressure in tractor trailer to rise to approximately 10 psi.

5. Open garden hose line and carbon influent line and allow carbon to transfer. Carbon will continue to fill vessel and push out excess water through chemical hose into sump.

6. When cell is completely full of carbon, a carbon slurry will exit through the chemical hose into the sump pit. Carbon transfer is now complete.

7. Repeat for other cells.

START-UP

1. Prior to system start-up, the carbon units have to be wetted with clean water for a period of 24 to 78 hours to drive air from the pores in the carbon bed. In this system, the wetting procedure should be accomplished by backfilling the carbon cell with water.

   To backfill vessel PV-1 on either skid-mounted unit:

   a. Close valves V2 and V3.
   b. Close valves V6 and V1.
   c. Attach clean water feed line to backwash line (valve V7).
   d. Open valve V7.
   e. Open vent valve V9.
   f. Add water to the system through valve V7.
   g. When water flows out of the vent line, close valve V7 and vent valve V9.

   To backfill vessel PV-2 on either unit:

   a. Make sure valves V3, V4, and V7 are closed.
   b. Close valves V5 and V2.
   c. Attach clean water feed line to backwash line (valve V8).
   d. Open valve V8.
   e. Open vent valve V10.

f. Add water to the system through valve V8.
g. When water flows out of the vent line, close valve V8 and vent valve V10.

2. Set up piping for changed out cells so that a recirculation loop is established. Water should flow from the fresh carbon cells to the Discharge/Backwash Tank to the Equalization Tank and continue to flow in the "closed loop" system.

3. When this has been performed for 24 hours, check carbon discharge for levels of TCE, DCE, and vinyl chloride using the on-site GC unit. Also, monitor discharge pH.

4. When TCE, DCE, and vinyl chloride are "non-detect" for two sample runs in a row, and the pH has leveled out to approximately 8.5 su in the Discharge/Backwash Tank, put the new cells on line as the "polishing" cells (cells 3 and 4) and continue system operation.

7.2.2 Biological Fouling

If, due to extended shutdown, the carbon filter develops biological growth, a caustic wash of the filter media has proven successful in remedying the problem.

7.3 TROUBLESHOOTING AND PREVENTATIVE MAINTENANCE

A complete troubleshooting guide has been provided in Appendix R as Section 3.8 of Calgon's published materials. As preventive maintenance, periodic inspection of the vessel internal parts should be made to ensure that the underdrain, vessel lining, and nozzles are in good condition. As a minimum, each adsorber should be inspected during carbon transfers. Any nozzles showing signs of fatigue or surface area restriction due to pluggage of the nozzle slots should be replaced. Nozzles should be physically checked to ensure that they are tightly secured. Calgon Carbon Operations personnel should be present during internal vessel inspections.

No spare parts are recommended by the manufacturer.

8.0 EFFLUENT/BACKWASH SYSTEM

The Discharge/Backwash Tank is used to store initial startup treated water until off-site laboratory analytical results confirm that it is acceptable for discharge. The tank is also used to store treated water for use as backwash water to the Sand Filter Unit.

8.1 OPERATION

During normal operation, the treated water flow through the Discharge/Backwash Tank and is pumped through the Discharge Pump to the ELSA sanitary sewer discharge point. Pumpout rate from this tank is regulated based on level control and the need for backwash water to the Sand Filter. Effluent discharge criteria have been presented in Chapter 1.0. If effluent criteria have not been met, the Discharge/Backwash Tank water must be recycled through the treatment plant and retested. Prior to proceeding with recycle, a determination as to the cause of effluent non-compliance should be confirmed.

Backwash of the Sand Filter is accomplished with the Backwash Pump. The backwash water from the Sand Filter is returned to the Equalization Tank for retreatment.

Operation of the Discharge Pump located within the Discharge/Backwash Tank is controlled by both the level in the tank and the pH of the effluent. If the level in the tank has not reached the position of the high level electrode, the pump will not start. The Discharge Pump will be activated when the tank "high" level is reached and will run until the tank "low" level is reached. If the pH is less than 6.0 or greater than 10.0, the pump will also not run as this would cause a discharge exceedence.

Operation of the Backwash Pump is on a manual basis only. It is not anticipated that backwashing of the Sand Filter will be required on a frequent basis.

8.2 TROUBLESHOOTING/MAINTENANCE

The following Appendices may be referenced for pertinent O&M data for the effluent/backwash system components:

- Discharge/Backwash Tank -- Appendix B
- Discharge Pump -- Appendix C
- Backwash Pump -- Appendix C
- pH Probes -- Appendix L
- Level Probes -- Appendix L

Pump preventative maintenance information has been provided in Chapter 3.0 of this O&M Manual. Level probes and pH probes should be checked and calibrated on a monthly basis as a minimum. No maintenance is required for the tank.

Treatment system effluent samples should be collected twice per month as detailed in Chapter 1.0.

9.0 VAPOR PHASE CARBON ADSORPTION FOR SYSTEM VENTS

A Vapor Phase Carbon Adsorption Drum has been included with the NAWC Trenton groundwater treatment system to provide control of volatile organic emissions from sources with high generation potential. The system consists of vent piping, a Vapor Phase Carbon Adsorption Drum, and a Carbon Saturation Indicator. Vents from the Equalization Tank, the Clarifier Unit, and the pH Adjustment Tank are piped together to the inlet of the Vapor Phase Carbon Adsorption Drum for treatment prior to discharge through an exterior vent stack. Details on the Vapor Phase Carbon Adsorption Drum are provided in Appendix Q.

The saturation indicator should be inspected every day on which the plant is attended. If the indicator shows that saturation has occurred, the drum must be disconnected from the system and replaced with a drum of fresh vapor phase carbon and a new saturation indicator.

No moving parts are involved with the vent treatment system. No routine maintenance or spare parts are required.

NOT P/O SYSTEM. OFF-GAS FROM STRIPPER, EQUITANK, CLARIFIER & PH ADJUST TANK ARE VENTED TO CAT-OX UNIT.

10.0 CHEMICAL ADDITION SYSTEM

The treatment system includes three chemical addition points, along with their associated metering pumps and chemical storage and dilution tanks. They are used for the addition of acid, caustic and flocculant. The metering pumps are of a constant speed, variable length type. Most utilize an electronic positioner to automatically control the chemical addition rate. The sodium hydroxide is stored in drums and the flocculant is stored in 5-gallon containers. Both caustic (sodium hydroxide) and flocculant solutions are made up in high density polyethylene tanks with covers. Sulfuric acid is drawn directly from the cubetainer in which it is supplied.

The Caustic Metering Pump is used to add caustic to the Equalization Tank. The Equalization Tank is equipped with a Recirculation Pump, which ensures that the caustic being added is completely mixed with the influent stream before entering the Clarifier. The Caustic Metering Pump is equipped with an electronic stroke adjustment which receives a 4-20 mA signal from the PLC based on the pH sensed in the Equalization Tank. Caustic is added to the tank to increase the pH of the water to minimize the concentration of dissolved metals. The Caustic Metering Pump draws diluted caustic solution from a 55-gallon caustic dilution tank. The flow rate of caustic is determined by the PLC based on the pH of the water in the equalization tank and the flow rate of water entering the tank.

Flocculant is added by the Polymer Metering Pump into the flash mix chamber of the Clarifier. The 0.5% flocculant solution is made up in a 50-gallon dilution tank. The tank is equipped with a mixer for obtaining a better dilution of the polymer. The flocculant promotes agglomeration of the precipitated solids into larger particles which settle more rapidly in the Clarifier. Polymer flocculants are normally added in doses ranging from 0.5 to 5.0 ppm. The Polymer Metering Pump has been supplied with an electronic stroke adjustment, which receives a 4-20 mA signal from the PLC. The Polymer Metering Pump operates under flow pace control. The 4-20 mA signal is proportional to the flow of water entering the flash mix tank. Having a PLC-controlled signal gives the system enhanced capability to adjust the polymer flow rate automatically.

Polymer used in this process is supplied as an emulsion and is diluted on a volume basis to a 0.5% solution before being added to the process water flow. The dilution is performed in the mixed polymer dilution tank.

Jar tests will be performed as needed during the system startup to verify that the flocculant feed rate is correct for the desired result.

The Acid Metering Pump is used to meter acid into the pH Adjustment Tank . The acid is added to reduce the Clarifier effluent pH to 7.0 prior to further treatment. It is not anticipated that the system will consume a significant amount of acid; therefore, a 0.02 N acid is being used for this application. The acid is drawn directly from a 5-gallon cubetainer by the Acid Metering Pump. The pump contains an electronic stroke control which receives a 4-20 mA signal from the PLC. As with the Caustic Metering Pump, the Acid Metering Pump receives a signal based on the pH in the pH Adjustment Tank and the flow rate of process water entering the pH Adjustment Tank.

10.1 OPERATION

The chemical addition loops are controlled by PID loops. Under normal operation conditions, all of the pump and mixer HAND/OFF/ AUTO switches are to be placed in the AUTO mode.

During initial startup, the PID control gains will be set and should require little adjustment other than fine tuning in the future. The setpoint and other PID parameters are modified by entering revised tuning constants into the PLC program on rungs 353-360 (refer to Chapter 2.0, Attachment 2, PLC Ladder Logic).

10.1.1 Flocculant Feed Rates

Flocculant Feed

Polymer Addition (ppm)	GPD	Output %
17.4	125	100
10	72	57.6
5	36	28.8
2	14.4	11.52
		max for 4-day run

The Polymer Metering Pump has a manual stroke adjustment which is set based on calculations or empirical results based on the amount of polymer required for optimal thickening of the metal oxide floc.

10.1.2 Pump Capacity

The following table describes the metering pump capacity in gallons per hour (gph) for various pump output percentages.

METERING PUMP CAPACITIES (GPH)

Output%	Caustic Metering Pump	Polymer Metering Pump	Acid Metering Pump
100	0.42	5.2	0.42
90	0.378	4.68	0.378
80	0.336	4.16	0.336
70	0.294	3.64	0.294
60	0.252	3.12	0.252
50	0.210	2.60	0.210
40	0.168	2.08	0.168
30	0.126	1.56	0.126
20	0.084	1.04	0.084
10	0.042	0.52	0.042

10.1.3 Metering Pump Operation Modes

The PLC controls the operation of the metering pump motor. For normal operation, the caustic and sulfuric acid pump controls should be placed in EXT mode. This mode select switch is located on the pump itself. Each metering pump can be disconnected from its power source by unplugging the pump. This feature permits the operator to shut off an individual pump disabling the addition of a particular treatment chemical.

Manual mode adjustment of the flow rate from metering pumps with electronic stroke control is set by controls mounted on the pump housing. Manual settings will override the PLC control.

If it is desired to do a completely manual adjustment on the electronic stroke controls using the stroke adjustment handle on the pump, the 120 volt power to the stroke positioner must be physically disconnected. If 120 volt power is supplied to the stroke positioner and an adjustment is made to the stroke adjustment knob, the positioner will automatically readjust it back to the original point. This will also be the point just where the 4-20 mA control signal tells the positioner to adjust it.

10.2 CHEMICAL MAKE-UP

10.2.1 Safety Precautions

Sulfuric acid and caustic used in the treatment of the process water are hazardous in their concentrated form. Personal protective clothing is to be worn at all times when handling or working with these chemicals. It is important that the right chemicals are made up and added to the correct tank. Always follow the site safety plan requirements when working with or around the chemicals. See the safety section of this manual for more information on the specific sections. In addition, the Health and Safety Plan (HASP) for the water treatment system is maintained at the site for reference.

10.2.2 Flocculant Tank

The flocculant to be used with the system is CY-TEC Magnifloc 1883A. It is a high molecular weight anionic polymer flocculant. Polymer flocculants are long-chained organic molecules with particular functional groups attached which give charged sites to the molecule. The charged sites act to attract the precipitated solids to form a floc. Polymer flocculants, especially high molecular weight types, form very viscous solutions with water. Polymer flocculant cannot be added directly to the process stream in its dry or emulsion form. It must first be diluted. The flocculant is diluted to a 0.5% by volume solution in the chemical make-up tank. Higher polymer concentration is not recommended because the solution will become extremely viscous, and will mix poorly with the groundwater.

To prepare a batch of flocculant solution, fill the flocculant tank with potable water and turn on the mixer. Add approximately 29 ounces of Magnifloc 1883A to each 45 gallons of water. The polymer make-up tank has graduations on the side to indicate the volume of tank contents. The flocculant tank has a nominal capacity of 50 gallons. When adding the polymer to the tank it is important to **add the polymer slowly to the vortex** so that it easily disperses in the water. Adding the polymer rapidly will result in clumps and balls of polymer which do not dissolve readily. Even when adding polymer slowly, it is common to see some small clumps of polymer. These small clumps will not result in operational problems and will dissolve with continuous mixing over a period of time. Once the polymer is completely mixed, the mixer can be shut off by turning the toggle switch to the off position.

10.2.3 Caustic Feed Tank

Caustic soda solution is used in the system to adjust pH in order to precipitate metals out of the process water. A 55-gallon tank with a mixer is provided with the system to dilute 25% caustic soda solution to 1% solution. The 1% diluted caustic soda (sodium hydroxide) is chosen for this application because the rate of addition to the process is easily controlled. In addition, 25% caustic solution is less likely to freeze than 50% caustic solution. Fifty percent caustic solution freezes at approximately 53°F.

When preparing the caustic solution, **first add the dilution water to the tank and then proceed to slowly add the caustic while mixing**. Heat is generated in the process of diluting caustic with water. The mixer must be running while diluting the caustic to keep the solution mixed and prevent localized hot spots which could result in damage to the tank. Always use caution when working with caustic. See the safety

section of this manual and the site-specific Health and Safety Plan (HASP), which is maintained at the plant, for more information.

10.2.4 Acid Feed Tank

The acid chosen to be used for pH adjustment is 0.02 Normal sulfuric acid. The acid is used to adjust the process water pH in the pH Adjustment Tank. Sulfuric acid is supplied in 5-gallon cubetainers. The Acid Metering Pump draws directly from the cubetainer in which the acid is supplied, and meters the acid directly into the pH Adjustment Tank.

Always use caution when working with acid. Large amounts of heat are given off when sulfuric acid is mixed with water. **Never add water to concentrated acid**. Only add acid to water. See the safety section of this manual and HASP for more information.

11.0 COMPRESSED AIR SYSTEM

11.1 OPERATION

The NAWC Trenton groundwater treatment system has been provided with an Ingersoll-Rand Model 2475N7.5 Air Compressor. This is a two stage, finger valve air compressor which is mounted on top of an 80-gallon air receiver tank. It was provided complete with an air inlet filter, relief valve, intercooler assembly, service valve, manual drain, and belt guard. The compressor is capable of delivering compressed air at a maximum discharge pressure of 200 psig. The air compressor has been provided primarily for operation of the Sludge Transfer Pump mounted under the Clarifier Unit. However, it may also be used to operate pneumatic tools and assist in carbon changeout operations.

11.2 TROUBLESHOOTING/MAINTENANCE

A complete troubleshooting section (see page 9 of literature - Section 3) and a complete maintenance section (see page 10 of literature - Section 4) have been provided in the manufacturer's literature provided in Appendix J. A summary of the maintenance procedures and their recommended frequency are presented below:

Maintenance Operation	Manufacturer Recommended Frequency	Actual Scheduled Frequency
Check frame lubricant level	Daily	Monthly
Inspect and clean air inlet filter	Weekly	Monthly
Clean exterior of intercooler	Weekly	Monthly
Manually check relief compressor valves	Weekly	Monthly
Clean cylinder cooling fins	Weekly	Monthly
Inspect lubricant for contamination and change if necessary	Annually or 2000 hrs	Annually
Inspect and clean compressor valves	Every 3 mos. or 500 hrs	Every 6 mos.
Check belt tension	Monthly	Monthly
Clean motor	Monthly	Monthly
Inspect and lubricate motor bearings	Annually or 2000 hrs	Annually
Manually drain condensate from receiver	Daily	Twice per week
Manually check receiver relief valves	Weekly	Monthly
Check for unusual noise/vibration	Daily	Twice per week
Check and tighten screws/bolts	Monthly	Monthly
Inspector for air leaks	Monthly	Monthly

The actual scheduled frequencies noted above are based on two site visits per week by O&M personnel. The manufacturer recommends the use of T30 SELECT™ synthetic lubricant in the compressor. It reduces wear and eliminates most carbon build-up on compressor valves. This allow the compressor to run more efficiently and for valve life to be increased. Fill the crankcase to the bottom thread of the oil fill opening. Hand-tighten the oil plug.

11.3 SPARE PARTS

Recommended spare parts based on Class 1 usage (defined as recommended quantity for domestic service where some interruptions in service are not objectionable) are:

- One frame end cover gasket (Part No. 32247884)
- **One oil filler plug o-ring (Part No. 32247850)**
- One shaft end cover gasket (Part No. 32247876)
- One finger inlet valve, high pressure (Part No. 32236671)
- One finger discharge valve, high pressure (Part No. 32241010)
- One finger inlet valve, low pressure (Part No. 32248130)
- One finger discharge valve, low pressure (Part No. 32248155)
- **One 300 psig pressure gauge (Part No. 32013872)**
- One NEMA 1, 175 psig pressure switch (Part No. 32147738)
- One set of 2.5-in. piston rings (Part No. 32198368)
- Two cylinder/flange gaskets (Part No. 32247868)
- One valve plate o-ring, high pressure (Part No. 32247462)
- One airhead gasket, high pressure (Part No. 32247926)
- One 4-in. piston ring set (Part No. 32194151)
- One valve plate gasket, low pressure (Part No. 32248197)
- One airhead gasket, low pressure (Part No. 32248198)
- **One 10 micron filter element (Part No. 32170979)**

Since the treatment plant will not be manned by a mechanic, most maintenance items beyond belt changes and lubrication will be performed as a service call to the local manufacturer's representative. Therefore, it is only recommended that the bold faced spare parts be maintained on site.

12.0 ROUTINE MAINTENANCE REQUIREMENTS

The following summarizes the routine maintenance requirements for treatment system equipment based on the manufacturer's recommendations provided in Appendices A through R.

MAINTENANCE SCHEDULE			
Unit	**Requirement (Material)**	**Frequency**	**Reference**
Extraction Well Pump	None listed	N/A	Appendix A
System Tanks	None listed	N/A	Appendix B
Equalization Tank Recirculation Pump pH Adjustment Tank Recirculation Pump	Change lubricating oil in oil chamber (0.55 quarts, 10W high detergent oil)	Annually	Appendix C, ABS-CD Range Pump Manual, page 3
Equalization Tank Transfer Pump Discharge Pump Sump Pump	Cable breakdown check	"Regular Interval" (quarterly)	Appendix C, Multiquip Operation Manual (last page)
	Insulation check		
Backwash Pump	Change lubricating oil in oil chamber (0.4 quarts, 10W high detergent oil)	Annually	Appendix C, ABS-Jumbo 31 Series O&M Manual, page 5
pH Adjustment Tank Transfer Pump	None listed	N/A	Appendix C
Chemical Feed Pumps	None listed	N/A	Appendix D
Inclined Plate Separator: Separator/Clarifier	Empty clarifier and inspect lamella plates for damage or sludge buildup	Every 6 months to 1 year	Appendix E, HEI O&M Manual, page 4 of 9
Inclined Plate Separator: Flash Mixer Motor (3085)/ Flocculator Motor (3090)	Grease lubricated, maintenance-free units; overhaul only	Every 20,000 hours or 4 to 5 years	Appendix E, SM-CYCLO O&M Manual, page 6
Inclined Plate Separator: Flocculator Reducer	Check oil level	"Regularly" (once per month)	Appendix E, Lenze O&M Manual, page 6
Inclined Plate Separator: Polymer Feed Pump	Change cartridge valves	Every 4 to 6 months	Appendix E, Electronic Metering Pumps O&M Manual, page 15
Inclined Plate Separator: Polymer Tank Mixer	None listed	N/A	Appendix E, Lightnin Mixer O&M Manual
Sludge Transfer Pump	None listed	N/A	Appendix F
Sand Filter	Backwash	As needed, based on differential pressure	Appendix G, page 5
Bag Filters	Lubricate filter o-ring seals (silicone based grease) and inspect filter retainer basket	"As Needed" (monthly at changeout of bags)	Appendix H, Preventative Maintenance Guidelines, page 3
Influent and Effluent Flowmeters	None listed	N/A	Appendix I
Air Compressor	Check frame lubricant level	Daily	Appendix J, page 10
	Inspect and clean out inlet filter	Weekly	Appendix J, page 10
	Clean exterior intercooler	Weekly	Appendix J, page 10
	Check (manually) relief valves	Weekly	Appendix J, page 10
	Clean cylinder cooling fins	Weekly	Appendix J, page 10

MAINTENANCE SCHEDULE			
Unit	**Requirement (Material)**	**Frequency**	**Reference**
Air Compressor (continued)	Inspect lubricant for contamination	Every 2,000 hours or 12 months	Appendix J, page 10
	Inspect and clean compressor valves	Every 500 hours or 3 months	Appendix J, page 10
	Check belt tension	Monthly	Appendix J, page 10
	Clean motor	Monthly	Appendix J, page 10
	Inspect and lubricated motor bearings	Every 2,000 hours or 12 months	Appendix J, page 10
	Manually drain condensate from receiver	Daily	Appendix J, page 10
	Manually check receiver relief valve	Weekly	Appendix J, page 10
	Check for unusual noise/vibration	Daily	Appendix J, page 10
	Check and tighten screws/bolts	Monthly	Appendix J, page 10
	Inspect for air leaks	Monthly	Appendix J, page 10
Granular Activated Carbon - Liquid Phase	Change spent carbon	As Needed	Appendix R, Chapter 4.0

13.0 CALIBRATION

To ensure positive process control, each pH sensor and each pressure differential switch has been calibrated by OHM.

13.1 pH SENSORS

The groundwater treatment system includes three pH sensors. These sensors are installed in the Equalizaiton Tank, the pH Adjustment Tank, and the Clean Water/Backwash Tank. The sensor in the Equalization Tank provides the process variable input to the PLC process control algorithm, which modulates the amount of sodium hydroxide added to the tank. The sensor in the pH Adjustment Tank provides the process variable used in the PLC process control algorithm, which modulates the amount of sulfuric acid added to the tank. The last pH sensor monitors the treated water pH, and is designed to sheet the entire treatment down if the pH in the clean water tank does not fall in the pH range stipulated for compliant groundwater discharge. Each of the three pH sensors were calibrated with standardized buffering solutions at two known pH values.

13.2 DIFFERENTIAL PRESSURE SWITCHES

Each of the six differential pressure switches were calibrated with a hand pressure pump, and set to 18 psid. The process checks the pressure drop across the bag filter, the sand filter, and each of the four carbon vessels to ensure that the treatment system operates at a safe pressure.

APPENDIX A
EXTRACTION WELL PUMP AND LEVEL CONTROLS

EXTRACTION WELL PUMP

Manufacturer: Grundfos Pump Corporation
2555 Clovis Avenue
Clovis, CA 93612
(800) 333-1366 Fax: (800) 333-1363

Supplier: Bisco Environmental
30 Stergis Way
Dedham, MA 02026
(800) 225-8006 Fax: (617) 461-1152
Contact: Tim Mahoney

LEVEL CONTROLS

Manufacturer: Warrick Controls, Inc.
4237 Normandy Court
Royal Oak, MI 48073-2264
(810) 549-4900 Fax: (810) 549-4904

Supplier: Bisco Environmental
30 Stergis Way
Dedham, MA 02026
(800) 225-8006 Fax: (617) 461-1152
Contact: Tim Mahoney

SUMMARY

Submersible Well Pump	Grundfos Model 25S10-7
Water Level Control Box	Warrick Series 17 Control
Conductance Probes (4 total)	Warrick 3W1
Probe wire, power cable pump, wire connector, splice kit	Warrick Series 3E4A electrode fitting and 3Z1A suspension wire

MODEL 25S — 25 GPM — GRUNDFOS

FLOW RANGE
18 to 32 GPM

PUMP OUTLET
1½" NPT

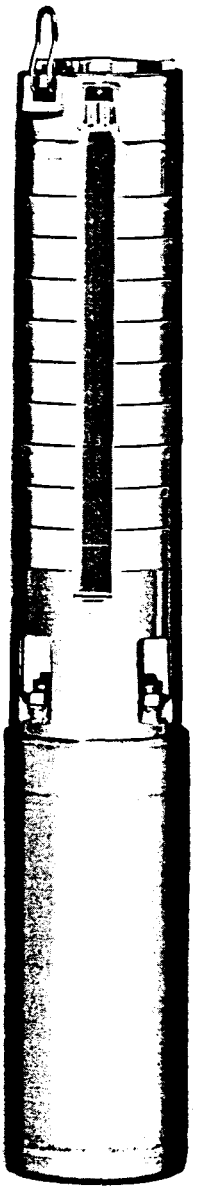

PERFORMANCE CURVES

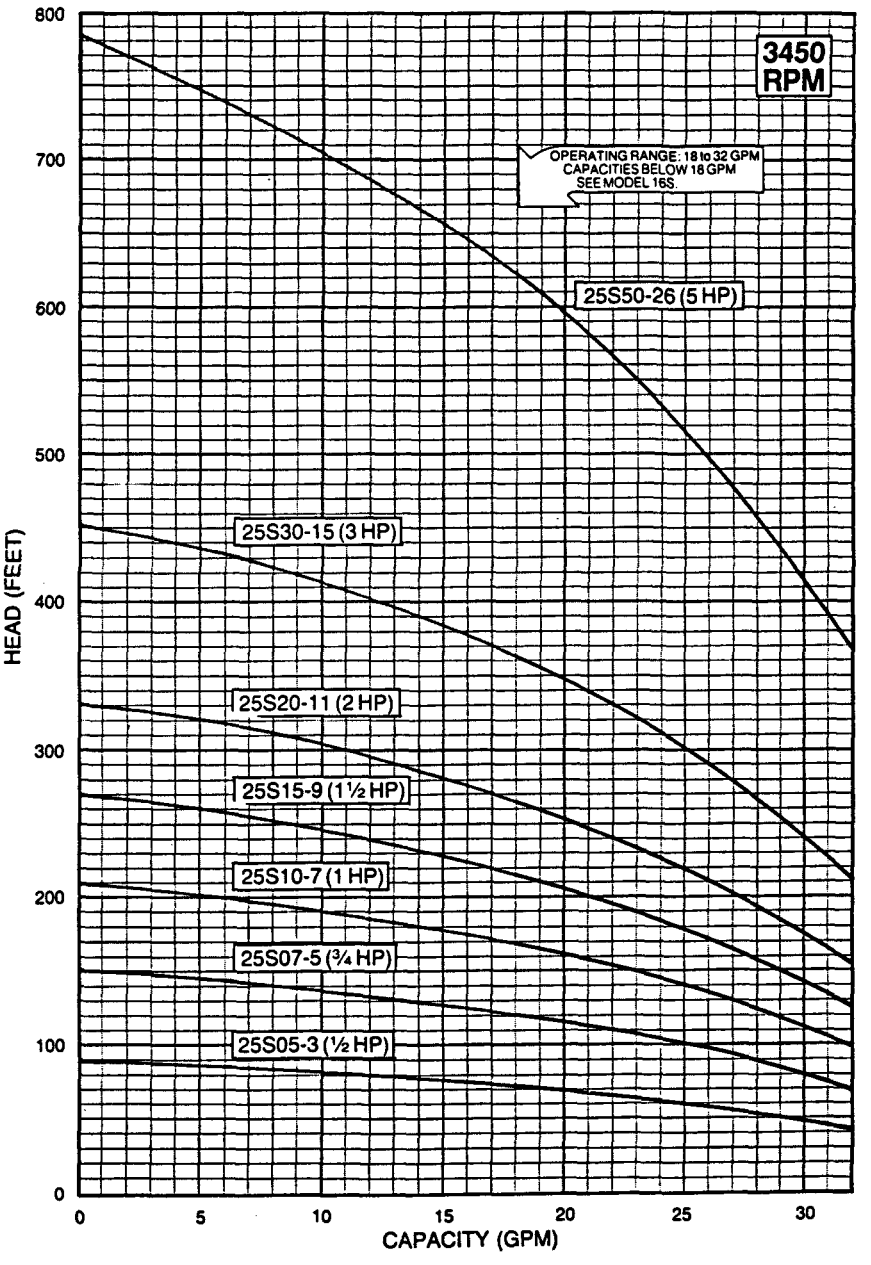

DIMENSIONS AND WEIGHTS

MODEL NO.	HP	LENGTH (INCHES)	WIDTH (INCHES)	APPROX. UNIT SHIPPING WT. (LBS.)
25S05-3	½	20 1/4	3 15/16	26
25S07-5	¾	22 3/8	3 15/16	28
25S10-7	1	24 7/8	3 15/16	29
25S15-9	1 ½	28	3 15/16	34
25S20-11	2	28 7/8	3 15/16	37
25S30-15	3	39 1/8	3 15/16	59
25S50-26	5	51 1/8	3 15/16	76

Specifications are subject to change without notice.

Installation and Operating Instructions

Stainless Steel Submersible Pumps

GRUNDFOS®

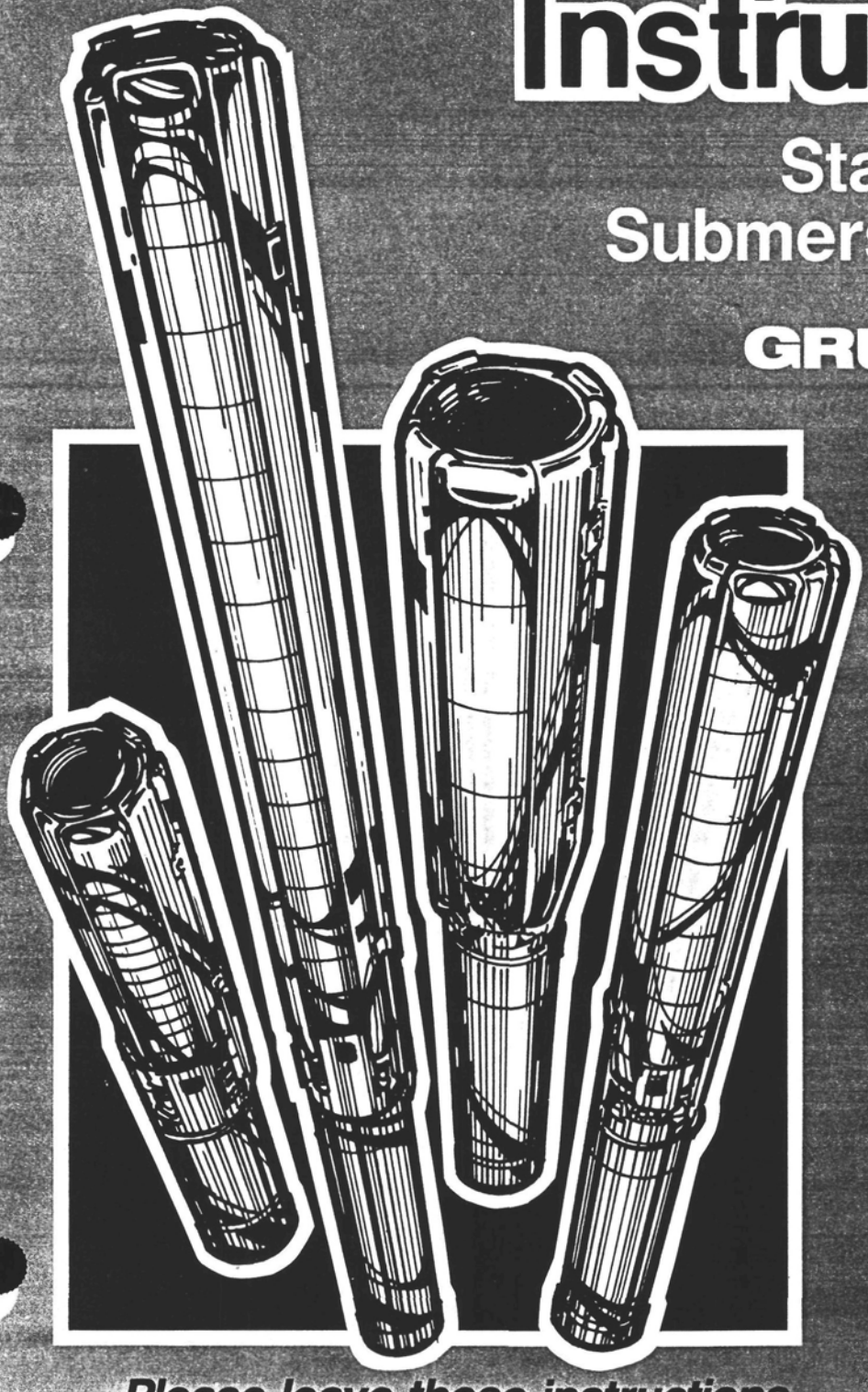

1 Shipment Inspection ■ Page 1

2 Pre-Installation Checklist ■ Page 1

3 Wire Cable Type ■ Page 2

4 Splicing the Motor Cable ■ Page 2

5 Installation ■ Page 3

6 Electrical ■ Page 4

7 Start-up ■ Page 6

8 Trouble-shooting ■ Page 7

9 Technical Data ■ Page 10

Please leave these instructions with the pump

Installation and Operating Instructions

TABLE OF CONTENTS

SECTION 1
Shipment Inspection . . . . . Page 1

SECTION 2
Pre-Installation Checklist . . . . . Page 1

SECTION 3
Wire Cable Type . . . . . Page 2

SECTION 4
Splicing the Motor Cable . . . . . Page 2

SECTION 5
Installation . . . . . Page 3

SECTION 6
Electrical . . . . . Page 4
- Engine Driven Generators 4
- Control Box / Panel Wiring 4
- High Voltage Surge Arresters 5
- Control Box / Panel Grounding 5
- Wiring Checks and Installation 5

SECTION 7
Start-Up . . . . . Page 6
- Three-Phase Motors 6
- Developing the Well 6
- Operation 7

SECTION 8
Troubleshooting . . . . . Page 7
- Preliminary Tests 7
- Troubleshooting Chart 8

SECTION 9
Technical Data . . . . . Page 10

Installation and Operation Instructions

GRUNDFOS STAINLESS STEEL SUBMERSIBLE PUMPS

Your Grundfos Submersible Pump is of the utmost quality. Combined with proper installation, your Grundfos pump will give you many years of reliable service.

To ensure the proper installation of the pump, carefully read the complete manual before attempting to install the pump.

SECTION 1.

Shipment Inspection

Examine the components carefully to make sure no damage has occurred to the pump-end, motor, cable or control box during shipment.

This Grundfos Submersible Pump should remain in its shipping carton until it is ready to be installed. The carton is specially designed to protect it from damage. During unpacking and prior to installation, **make sure that the pump is not dropped or mishandled.**

The motor is equipped with an electrical cable. **Under no circumstance should the cable be used to support the weight of the pump.**

You will find a loose data plate wired to the pump. It should be securely mounted at the well or attached to the control box.

SECTION 2.

Pre-Installation Checklist

Before beginning installation, the following checks should be made. They are all critical for the proper installation of this submersible pump.

☑ A. CONDITION OF THE WELL

If the pump is to be installed in a new well, the well should be fully developed and bailed or blown free of cuttings and sand. The stainless steel construction of the Grundfos submersible make it resistant to abrasion; however, no pump, made of any material, can forever withstand the destructive wear that occurs when constantly pumping sandy water.

If this pump is used to replace an oil-filled submersible or oil-lubricated line-shaft turbine in an existing well, **the well must be blown or bailed clear of oil.**

Determine the maximum depth of the well, and the draw-down level at the pump's maximum capacity. Pump selection and setting depth should be based on this data.

The inside diameter of the well casing should be checked to ensure that it is not smaller than the size of the pump and motor.

☑ B. CONDITION OF THE WATER

Submersible pumps are designed for pumping clear and cold water that is free of air and gases. Decreased pump performance and life expectancy can occur if the water is not cold and clear or contains air and gases.

Maximum water temperature should not exceed 102°F. Special consideration must be given to the pump and motor if it is to be used to pump water above 102°F.

The Grundfos stainless steel submersible is highly resistant to the normal corrosive environment found in some water wells. If water well tests determine the water has an excessive or unusual corrosive quality, or exceeds 102°F, contact your Grundfos representative for information concerning specially designed pumps for these applications.

☑ C. INSTALLATION DEPTH

A check should be made to ensure that the installation depth of the pump will always be at least three feet below the maximum draw-down level of the well. For flow rates exceeding 100 gpm, the NPSH may have to be considered. Refer to NPSH curves in the technical brochure.

The bottom of the motor should never be installed lower than the top of the well screen or within five feet of the well bottom.

If the pump is to be installed in a lake, pond, tank or large diameter well, the water velocity passing over the motor must be sufficient to ensure proper motor cooling. The minimum recommended water flow rates which ensure proper cooling are listed in Table A.

☑ D. ELECTRICAL SUPPLY

The motor voltage, phase and frequency indicated on the motor nameplate should be checked against the actual electrical supply.

SECTION 3.

Wire Cable Type

The wire cable used between the pump and control box or panel should be approved for submersible pump applications. The conductor may be solid or stranded. The cable may consist of individually insulated conductors twisted together, insulated conductors molded side by side in one flat cable or insulated conductors with a round overall jacket.

The conductor insulation should be type RW, RUW, TW, TWU or equivalent and must be suitable for use with submersible pumps. An equivalent Canadian Standards Association certified wire may also be used. See Table D for recommended sizes of cable lengths.

SECTION 4.

Splicing the Motor Cable

A good cable splice is critical to proper operation of the submersible pump and must be done with extreme care.

If the splice is carefully made, it will work as well as any other portion of the cable, and will be completely watertight.

Grundfos recommends using a heat shrink splice kit. The splice should be made in accordance with the kit manufacture's instructions. Typically a heat shrink splice can be made as follows:

1. Examine the motor cable and the drop cable carefully for damage.

2. Cut the motor leads off in a staggered manner. Cut the ends of the drop cable so that the ends match up with the motor leads (See Figure 4-A). On single-phase motors, **be sure to match the colors.**

3. Strip back and trim off ½ inch of insulation from each lead, making sure to scrape the wire bare to obtain a good connection. Be careful not to damage the copper conductor when stripping off the insulation.

4. Slide the heat shrink tubing on to each lead. Insert a properly sized "Sta-kon" type connector on each lead, making sure that lead colors are matched. Using a "Sta-kon" crimping pliers, indent the lugs (Figure 4-B). Be sure to squeeze hard on the pliers, particularly when using large cable.

5. Center the heat shrink tubing over the connector. Using a propane torch, lighter, or electric heat gun, uniformly heat the tubing starting first in the center working toward the ends (Figure 4-C).

6. Continue to apply the heat to the tubing using care not to let the flame directly contact the tubing. When the tubing shrinks and the sealant flows from the ends of the tubing, the splice is complete (Figure 4-D).

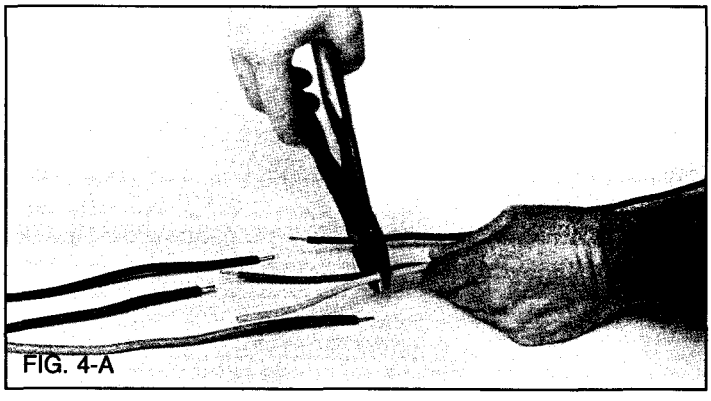

FIG. 4-A

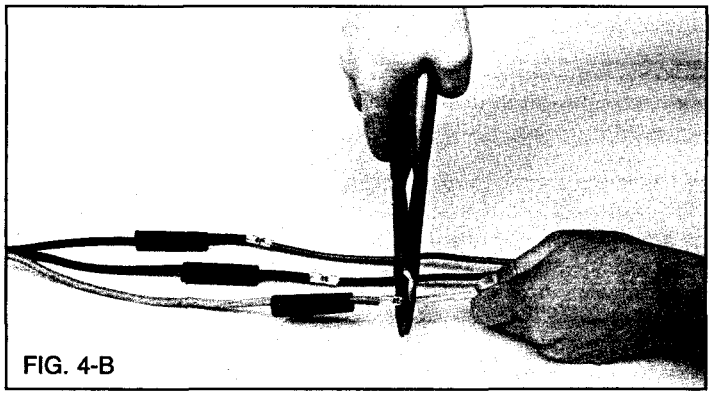

FIG. 4-B

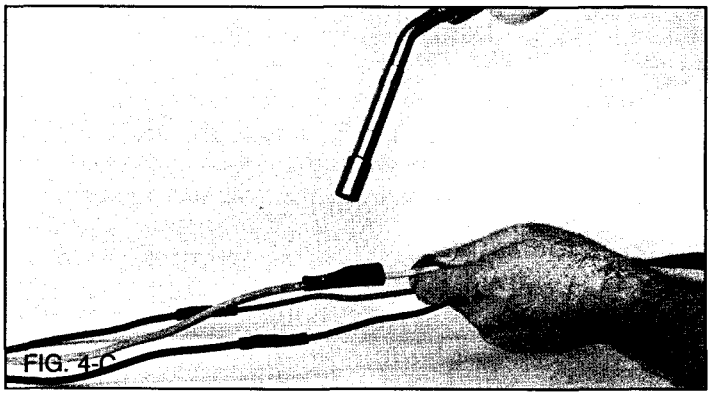

FIG. 4-C

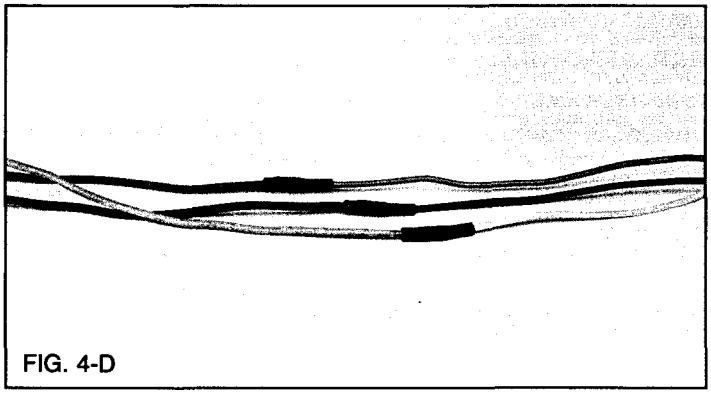

FIG. 4-D

SECTION 5.

Installation

The riser pipe or hose should be properly sized and selected based on estimated flow rates and friction-loss factors.

A back-up wrench should be used when the riser pipe is attached to the pump. The pump should be gripped only by the flats on the top of the discharge chamber. **The body of the pump, cable guard or motor should not be gripped under any circumstance.**

If Steel Riser Pipe is Used:

We recommend that steel riser pipes always be used with the larger submersibles. An approved pipe thread compound should be used on all joints. Make sure the joints are adequately tightened in order to resist the tendency of the motor to loosen the joints when stopping and starting.

When tightened, the first section of the riser pipe must not come in contact with the check valve retainer in the discharge chamber of the pump.

After the first section of the riser pipe has been attached to the pump, the lifting cable or elevator should be clamped to the pipe. **Do not clamp the pump.** When raising the pump and riser section, be careful not to place bending stress on the pump by picking it up by the pump-end only.

Make sure that the electrical cables are not cut or damaged in any way when the pump is being lowered in the well.

The drop cable should be secured to the riser pipe at frequent intervals to prevent sagging, looping or possible cable damage. Nylon cable clips or waterproof tape may be used. The cable splice should be protected by securing it with clips or tape just above and below the splice.

If Plastic or Flexible Riser Pipe is Used:

It is recommended that plastic type riser pipe be used **only** with the smaller domestic submersibles. The pipe manufacturer or representative should be contacted to insure the pipe type and physical characteristics are suitable for this use. Use the correct joint compound recommended by the pipe manufacturer. In addition to making sure that joints are securely fastened, the use of a torque arrester is recommended when using plastic pipe.

Do not connect the first plastic or flexible riser section directly to the pump. Always attach a metallic nipple or adapter into the discharge chamber of the pump. When tightened, the threaded end of the nipple or adapter must not come in contact with the check valve retainer in the discharge chamber of the pump.

The drop cable should be secured to the riser pipe at frequent intervals to prevent sagging, looping and possible cable damage. Nylon cable clips or waterproof tape may be used. The cable splice should be protected by securing it with clips or tape just above each joint.

IMPORTANT- Plastic and flexible pipe tend to stretch under load. This stretching must be taken into account when securing the cable to the riser pipe. Leave 3 to 4 inches of slack between clips or taped points to allow for this stretching. This tendency for plastic and flexible pipe to stretch will also affect the calculation of the pump setting depth. As a general rule, you can estimate that plastic pipe will stretch to approximately 2% of its length. For example, if you installed 200 feet of plastic riser pipe, the pump may actually be down 204 feet. If the depth setting is critical, check with the manufacturer of the pipe to determine how to compensate for pipe stretch.

When plastic riser pipe is used, it is recommended that a safety cable be attached to the pump to lower and raise it. The discharge piece of a Grundfos 4 inch submersible is designed to accommodate this cable (Figure 5-A).

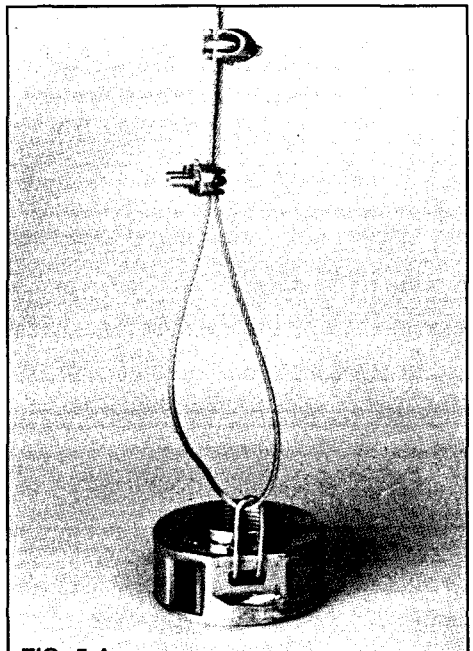

FIG. 5-A

Check valves:

A check valve should always be installed at the surface of the well. In addition, for installations deeper than 200 feet, check valves should be installed at no more than 200 foot intervals.

Protect the well from contamination:

To protect against surface water entering the well and contaminating the water source, the well should be finished off above grade, and a locally approved well seal or pitless adapter unit utilized.

SECTION 6.

Electrical

WARNING: A faulty motor or wiring can be a serious electrical shock hazard if it or surrounding water is accessible to human contact. To avoid this danger, connect the motor frame to the power supply grounding terminal with copper conductor no smaller than the circuit conductors unless the motor and surrounding water are inaccessible, as in a drilled well. In all installations connect above-ground metal plumbing to the power supply ground per National Electrical Code Article 250-80 to prevent electrical shock hazard.

All electrical work should be performed by a qualified electrician in accordance with the latest edition of the National Electrical Code, local codes and regulations.

Verification of the electrical supply should be made to ensure the voltage, phase and frequency match that of the motor. Motor voltage, phase, frequency and full-load current information can be found on the nameplate attached to the motor. Motor electrical data can be found in Table E.

If voltage variations are larger than ± 10%, do not operate the pump.

Direct on-line starting is used due to the extremely fast run-up time of the motor (0.1 second maximum), and the low moment of inertia of the pump and motor. Direct on-line starting current (locked rotor amp) is between 4 and 6.5 times the full-load current. If direct on-line starting is not acceptable and reduced starting current is required, an auto-transformer or resistant starters should be used for 5 to 30 HP motors (depending on cable length). For motors over 30 HP, use auto-transformer starters.

Engine-Driven Generators

If the submersible pump is going to be operated using an engine driven generator, we suggest the manufacturer of the generator be contacted to ensure the proper generator is selected and used. See Table B for generator sizing guide.

If power is going to be supplied through transformers, Table C outlines the minimum KVA rating and capacity required for satisfactory pump operation.

Control Box/Panel Wiring

1. Single-Phase Motors:

Single-phase motors must be connected as indicated in the motor control box. A typical single-phase wiring diagram using a Grundfos control box is shown (Figure 6-A).

2. Three-Phase Motors:

Three-phase motors must be used with the proper size and type of motor starter to ensure the motor is protected against damage from low voltage, phase failure, current unbalance and overload current. A properly sized starter with ambient-compensated extra quick-trip overloads must be used to give the best possible motor winding protection. **Each of the three motor legs must be protected with overloads.** The thermal overloads must trip in less than 10 seconds at locked rotor (starting) current. For starter and overload protection guide, see Table H. A three-phase motor wiring diagram is illustrated below (See Figure 6-B).

Pumps should NEVER be started to check rotation unless the pump is totally submerged. Severe damage may be caused to the pump and motor if they are run dry.

Single-Phase Wiring Diagram
for GRUNDFOS Control Boxes

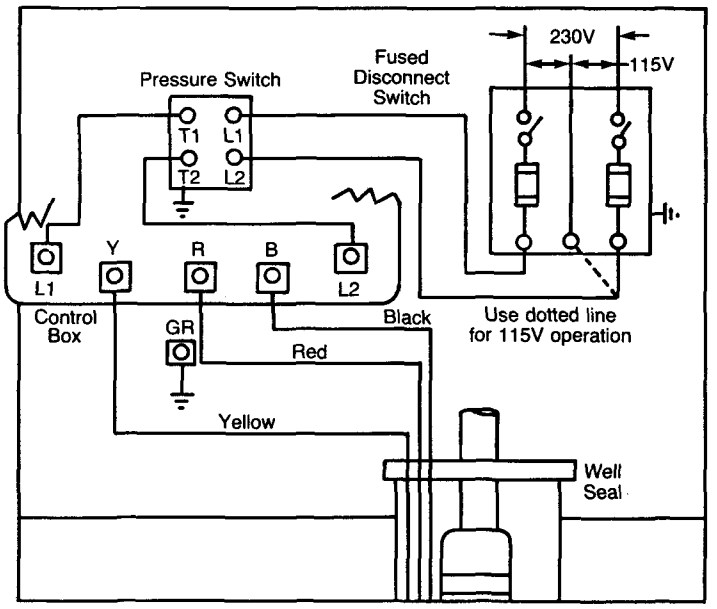

Figure 6-A

Three-Phase Wiring Diagram
for GRUNDFOS and FRANKLIN Control Boxes

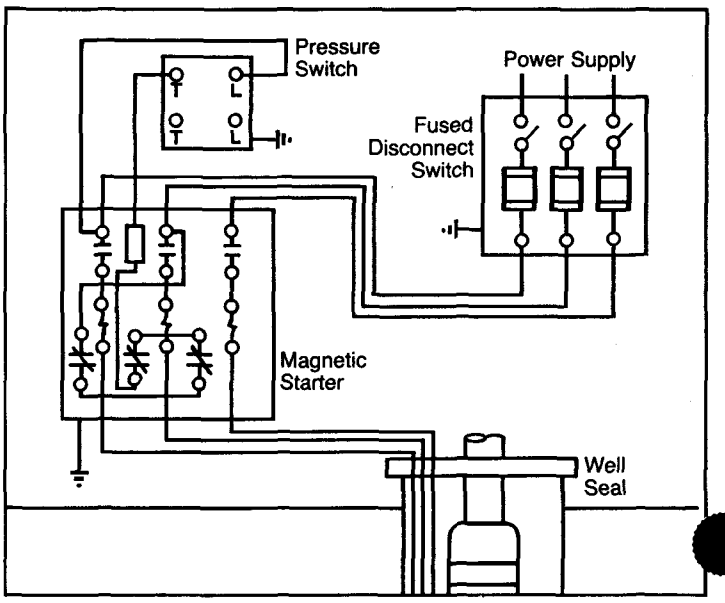

Figure 6-B

High Voltage Surge Arresters

A high voltage surge arrester should be used to protect the motor against lightning and switching surges. Lightning voltage surges in power lines are caused when lightning strikes somewhere in the area. Switching surges are caused by the opening and closing of switches on the main high-voltage distribution power lines.

The correct voltage-rated surge arrester should be installed on the supply (line) side of the control box (Figure 6-C and 6-D). **The arrester must be grounded in accordance with the National Electrical Code and local codes and regulations.**

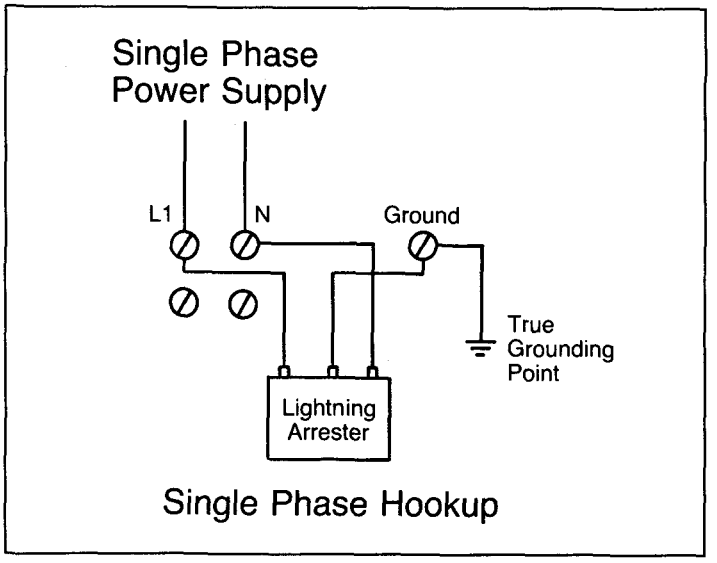

Figure 6-C

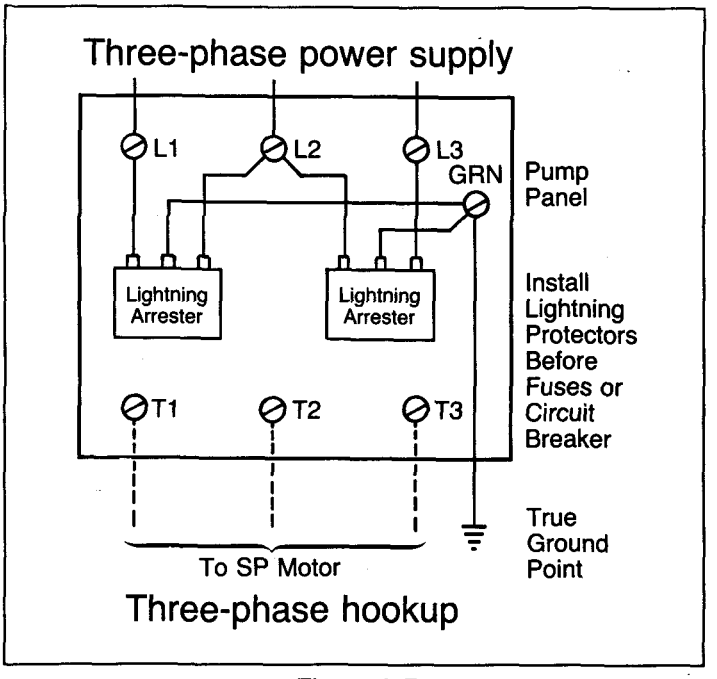

Figure 6-D

The warranty on all three-phase submersible motors is VOID if:

1. **The motor is operated with single-phase power through a phase converter.**
2. **Three-leg ambient compensated extra quick-trip overload protectors are not used.**
3. **Three-phase current unbalance is not checked and recorded. (See START-UP Section 7 for instructions.)**
4. **High voltage surge arresters are not installed.**

Control Box/Panel Grounding

The control box or panel shall be permanently grounded in accordance with the National Electrical Code and local codes or regulations. The ground wire should be a bare copper conductor at least the same size as the drop cable wire size. The ground wire should be run as short a distance as possible and be securely fastened to a true grounding point.

True grounding points are considered to be: a grounding rod driven into the water strata, steel well casing submerged into the water lower than the pump setting level, and steel discharge pipes without insulating couplings. If plastic discharge pipe and well casing are used or if a grounding wire is required by local codes, a properly sized bare copper wire should be connected to a stud on the motor and run to the control panel. Do not ground to a gas supply line. Connect the grounding wire to the ground point first and then to the terminal in the control box or panel.

Wiring Checks and Installation

Before making the final surface wiring connection of the drop cable to the control box or panel, it is a good practice to check the insulation resistance to ensure that the cable and splice are good. Measurements for a new installation must be at least 2,000,000 ohm. Do not start the pump if the measurement is less than this.

If it is higher than 2,000,000 ohm, the drop cable should then be run through the well seal by means of a conduit connector in such a way as to eliminate any possibility of foreign matter entering the well casing. Conduit should always be used from the pump to the control box or panel to protect the drop cable (See Figure 6-E). Finish wiring and verify that all electrical connections are made in accordance with the wiring diagram. Check to ensure the control box or panel and high voltage surge arrester have been grounded.

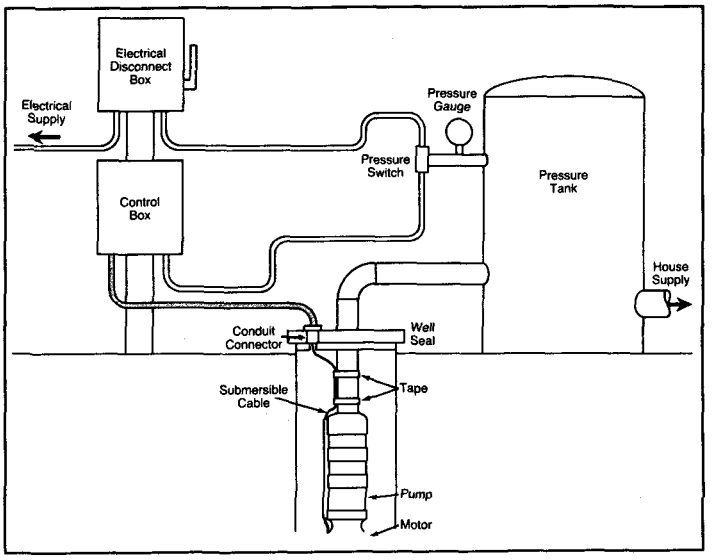

Figure 6-E

SECTION 7.

Start-Up

After the pump has been set into the well and the wiring connections have been made, the following procedures should be performed:

A. Attach a temporary horizontal length of pipe with installed gate valve to the riser pipe.

B. Adjust the gate valve one-third of the way open.

C. On three-phase units, check direction of rotation and current unbalance according to the instructions below.

For single-phase units proceed directly to "Developing the Well".

D. Under no circumstances should the pump be operated for any prolonged period of time with the discharge valve closed. This can result in motor and pump damage due to overheating. A properly sized relief valve should be installed at the well head to prevent the pump from running against a closed valve.

Three-Phase Motors

1. Check the direction of rotation

Three-phase motors can run in either direction depending on how they are connected to the power supply. When the three cable leads are first connected to the power supply, there is a 50% chance that the motor will run in the proper direction. **To make sure the motor is running in the proper direction, carefully follow the procedures below:**

A. Start the pump and check the water quantity and pressure developed.

B. Stop the pump and interchange any two leads.

C. Start the pump and again check the water quantity and pressure.

D. Compare the results observed. The wire connection which gave the highest pressure and largest water quantity is the correct connection.

2. Check for current unbalance

Current unbalance causes the motor to have reduced starting torque, overload tripping, excessive vibration and poor performance which can result in early motor failure. It is very important that current unbalance be checked in all three-phase systems. **Current unbalance between the legs should not exceed 5% under normal operating conditions.**

The supply power service should be verfied to see if it is a two or three transformer system. If two transformers are present, the system is an "open" delta or wye. If three transformers are present, the system is true three-phase.

Make sure the transformer ratings in kilovolt amps (KVA) is sufficient for the motor load. See Table C.

The percentage of current unbalance can be calculated by using the following formulas and procedures:

$$\text{Average current} = \frac{\text{Total of current values measured on each leg}}{3}$$

$$\%\ \text{Current unbalance} = \frac{\text{Greatest amp difference from the average}}{\text{average current}} \times 100$$

To determine the percentage of current unbalance:

A. Measure and record current readings in amps for each leg (hookup 1). Disconnect power.

B. Shift or roll the motor leads from left to right so the drop cable lead that was on terminal 1 is now on 2, lead on 2 is now on 3, and lead on 3 is now on 1 (hookup 2). Rolling the motor leads in this manner will not reverse the motor rotation. Start the pump, measure and record current reading on each leg. Disconnect power.

C. Again shift drop cable leads from left to right so the lead on terminal 1 goes to 2, 2 to 3 and 3 to 1 (hookup 3). Start pump, measure and record current reading on each leg. Disconnect power.

D. Add the values for each hookup.

E. Divide the total by 3 to obtain the average.

F. Compare each single leg reading from the average to obtain the greatest amp difference from the average.

G. Divide this difference by the average to obtain the precentage of unbalance

Use the wiring hookup which provides the lowest percentage of unbalance. (See Table F for a specific example of correcting for three-phase power unbalance.)

Developing the Well

After proper rotation and current unbalance have been checked, start the pump and let it operate until the water runs clear of sand, silt and other impurities.

Slowly open the valve in small increments as the water clears until the desired flow rate is reached. Do not operate the pump beyond its maximum flow rating. **The pump should not be stopped until the water runs clear.**

If the water is clean and clear when the pump is first started, the valve should still be **slowly opened until the desired flow rate is reached.** As the valve is being opened, the drawdown should be checked to ensure the pump is always submerged. **The dynamic water level should always be more than 3 feet above the inlet strainer of the pump.**

Disconnect the temporary piping arrangements and complete the final piping connections.

Under no circumstances should the pump be operated for any prolonged period of time with the discharge valve closed. This can result in motor and pump damage due to overheating. A properly sized relief valve should be installed at the well head to prevent the pump from running against a closed valve.

Start the pump and test the system. Check and record the voltage and current draw on each motor lead.

(con't)

Operation

1. The pump and system should be periodically checked for water quantity, pressure, drawdown, periods of cycling and operation of controls.

2. If the pump fails to operate, or there is a loss of performance, refer to Troubleshooting, Section 8.

SECTION 8.

Troubleshooting

The majority of problems that develop with submersible pumps are electrical, and most of these problems can be corrected without pulling the pump from the well. The following chart covers most of the submersible service work. As with any troubleshooting procedure, start with the simplest solution first; always make all the above-ground checks before pulling the pump from the well.

Usually only two instruments are needed – a combination voltmeter/ammeter, and an ohmmeter. These are relatively inexpensive and can be obtained from most water systems suppliers.

WHEN WORKING WITH ELECTRICAL CIRCUITS, USE CAUTION TO AVOID ELECTRICAL SHOCK. It is recommended that rubber gloves and boots be worn and that care is taken to have metal control boxes and motors grounded to power supply ground or steel drop pipe or casing extending into the well. WARNING: Submersible motors are intended for operation in a well. When not operated in a well, failure to connect motor frame to power supply ground may result in serious electrical shock.

Preliminary Tests

SUPPLY VOLTAGE

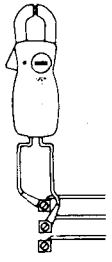

How to Measure

By means of a voltmeter, which has been set to the proper scale, measure the voltage at the control box or starter.

On single-phase units, measure between line and neutral.

On three-phase units measure between the legs (phases.)

What it Means

When the motor is under load, the voltage *should be within ± 10% of the nameplate* voltage. Larger voltage variation may cause winding damage.

Large variations in the voltage indicate a poor electrical supply and the pump should not be operated until these variations have been corrected.

If the voltage constantly remains high or low, the motor should be changed to the correct supply voltage.

CURRENT MEASUREMENT

How to Measure

By use of an ammeter, set on the proper scale, measure the current on each power lead at the control box or starter. See Electrical Data, Table E, for motor amp draw information.

Current should be measured when the pump is operating at a constant discharge pressure with the motor fully loaded.

What it Means

If the amp draw exceeds the listed service factor amps (SFA) or if the current unbalance is greater than 5% between each leg on three-phase units, check for the following:

1. Burnt contacts on motor starter.
2. Loose terminals in starter or control box or possible cable defect. Check winding and insulation resistances
3. Supply voltage too high or low.
4. Motor windings are shorted.
5. Pump is damaged, causing a motor overload.

WINDING RESISTANCE

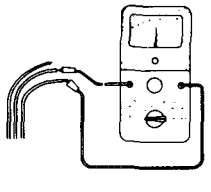

How to Measure

Turn off power and disconnect the drop cable leads in the control box or starter. Using an ohmmeter, set the scale selectors to Rx1 for values under 10 ohms and and Rx10 for values over 10 ohms.

Zero-adjust the meter and measure the resistance between leads. Record the values.

Motor resistance values can be found in Electrical Data, Table E. Cable resistance values are in Table G.

What it Means

If all the ohm values are normal, and the cable colors correct, the windings are not damaged.

If any one ohm value is less than normal, the motor may be shorted.

If any one ohm value is greater than normal, there is a poor cable connection or joint. The windings or cable may also be open.

If some of the ohm values are greater than normal and some less, the drop cable leads are mixed. To verify lead colors, see resistance values in Electrical Data, Table E.

INSULATION RESISTANCE

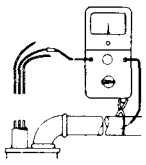

How to Measure

Turn off power and disconnect the drop cable leads in the control box or starter. Using an ohm or mega ohmmeter, set the scale selector to Rx100K and zero-adjust the meter.

Measure the resistance between the lead and ground (discharge pipe or well casing, if steel).

What it Means

For ohm values, refer to table below. Motors of all HP, voltage, phase and cycle duties have the same value of insulation resistance.

OHM VALUE	MEGAOHM VALUE	CONDITION OF MOTOR AND LEADS
		Motor not yet installed:
2,000,000 (or more)	2.0	New Motor.
1,000,000 (or more)	1.0	Used motor which can be reinstalled in the well.
		Motor in well (Ohm readings are for drop cable plus motor):
500,000 - 1,000,000	0.5 - 1.0	A motor in reasonably good condition.
20,000 - 500,000	0.02 - 0.5	A motor which may have been damaged by lightning or with damaged leads. Do not pull the pump for this reason.
10,000 - 20,000	0.01 - 0.02	A motor which definitely has been damaged or with damaged cable. The pump should be pulled and repairs made to the cable or the motor replaced. The motor will still operate, but probably not for long.
less than 10,000	0 - 0.01	A motor which has failed or with completely destroyed cable insulation. The pump must be pulled and the cable repaired or the motor replaced. The motor will not run in this condition.

Troubleshooting Chart

FAULT	POSSIBLE CAUSES	HOW TO CHECK	HOW TO CORRECT
A. Pump Does Not Run	**1.** No power at pump panel.	Check for voltage at panel.	If no voltage at panel, check feeder panel for tripped circuits.
	2. Fuses are blown or circuit breakers are tripped.	Remove fuses and check for continuity with ohmmeter.	Replace blown fuses or reset circuit breaker. If new fuses blow or circuit breaker trips, the electrical installation and motor must be checked.
	3. Motor starter overloads are burnt or have tripped out (three-phase only).	Check for voltage on line and load side of starter.	Replace burnt heaters or reset. Inspect starter for other damage. If heater trips again, check the supply voltage and starter holding coil.
	4. Starter does not energize (three-phase only).	Energize control circuit and check for voltage at the holding coil.	If no voltage, check control circuit. If voltage, check holding coil for shorts. Replace bad coil.
	5. Defective controls.	Check all safety and pressure switches for operation. Inspect contacts in control devices.	Replace worn or defective parts.
	6. Motor and/or cable are defective.	Turn off power. Disconnect motor leads from control box. Measure the lead-to-lead resistances with the ohmmeter (Rx1). Measure lead-to-ground values with ohmmeter (Rx100K). Record measured values.	If open motor winding or ground is found, remove pump and recheck values at the surface. Repair or replace motor or cable.
	7. Defective capacitor (single-phase only).	Turn off the power, then discharge capacitor. Check with an ohmmeter (Rx100K). When meter is connected, the needle should jump forward and slowly drift back.	If there is no needle movement, replace the capacitor.

(con't)

Troubleshooting Chart (continued)

FAULT	POSSIBLE CAUSES	HOW TO CHECK	HOW TO CORRECT
B. Pump Runs But Does Not Deliver Water	**1.** Groundwater level in well is too low or well is collapsed.	Check well draw-down. Water level should be at least 3 ft. above pump inlet during operation.	If not, lower pump if possible, or throttle discharge valve and install water level control.
	2. Integral pump check valve is blocked.	Install pressure gauge, start pump, gradually close the discharge valve and read pressure at shut-off. After taking reading, open valve to its previous position. Convert PSI to feet (For water: PSI x 2.31 ft/PSI = _____ ft.), and add this to the total vertical distance from the pressure gauge to the water level in the well while the pump is running. Refer to the specific pump curve for the shut-off head for that pump model. If the measured head is close to the curve, pump is probably OK.	If not close to the pump curve, remove pump and inspect discharge section. Remove blockage, repair valve and valve seat if necessary. Check for other damage. Rinse out pump and re-install.
	3. Inlet strainer is clogged.	Same as B.2 above.	If not close to the pump curve, remove pump and inspect. Clean strainer, inspect integral check valve for blockage, rinse out pump and reinstall.
	4. Pump is damaged.	Same as B.2 above.	If damaged, repair as necessary. Rinse out pump and re-install.
C. Pump Runs But at Reduced Capacity	**1.** Wrong rotation (three-phase only).	Check for proper electrical connection in control panel.	Correct wiring and change leads as required.
	2. Draw-down is larger than anticipated.	Check draw-down during pump operation.	Lower pump if possible. If not, throttle discharge valve and install water level control.
	3. Discharge piping or valve leaking.	Examine system for leaks.	Repair leaks.
	4. Pump strainer or check valve are clogged.	Same as B.2 above.	If not close to the pump curve, remove pump and inspect. Clean strainer, inspect integral check valve for blockage, rinse out pump and reinstall.
	5. Pump worn.	Same as B.2 above.	If not close to pump curve, remove pump and inspect.
D. Pump Cycles Too Much	**1.** Pressure switch is not properly adjusted or is defective.	Check pressure setting on switch and operation. Check voltage across closed contacts.	Re-adjust switch or replace if defective.
	2. Level control is not properly set or is defective.	Check setting and operation.	Re-adjust setting (refer to manufacturer data.) Replace if defective.
	3. Insufficient air charging or leaking tank or piping.	Pump air into tank or diaphram chamber. Check diaphram for leak. Check tank and piping for leaks with soap and water solution. Check air to water volume.	Repair or replace damaged component.
	4. Plugged snifter valve or bleed orifice.	Examine valve and orifice for dirt or corrosion.	Clean and/or replace if defective.
	5. Tank is too small.	Check tank size. Tank volume should be approximately 10 gallons for each gpm of pump capacity.	If tank is too small, replace with proper size tank.

(con't)

Troubleshooting Chart (continued)

FAULT	POSSIBLE CAUSES	HOW TO CHECK	HOW TO CORRECT
E. Fuses Blow or Circuit Breakers Trip	**1.** High or low voltage.	Check voltage at pump panel. If not within ± 10%, check wire size and length of run to pump panel.	If wire size is correct, contact power company. If not, correct and/or replace as necessary.
	2. Three-phase current unbalance.	Check current draw on each lead. Unbalance must be within ± 5%.	If current unbalance is not within ± 5%, contact power company.
	3. Control box wiring and components (single-phase only).	Check that control box parts match the parts list. Check to see that wiring matches wiring diagram. Check for loose or broken wires or terminals.	Correct as required.
	4. Defective capacitor (single-phase only).	Turn off power and discharge capacitor. Check using an ohmmeter (Rx100K). When the meter is connected, the needle should jump forward and slowly drift back.	If no meter movement, replace the capacitor.
	5. Starting relay (Franklin single-phase motors only).	Check resistance of relay coil with an ohmmeter (Rx1000K). Check contacts for wear.	Replace defective relay.

SECTION 9. Technical Data

Table A

Minimum Water Flow Requirements for Submersible Pump Motors

MOTOR DIAMETER	CASING OR SLEEVE I.D. IN INCHES	MIN. FLOW PAST THE MOTOR (GPM)
4"	4	1.2
	5	7
	6	13
	7	21
	8	30
6"	6	10
	7	28
	8	45
	10	85
	12	140
	14	198
	16	275
8"	8	10
	10	55
	12	110
	14	180
	16	255
10"	10	30
	12	85
	14	145
	16	220
	18	305

NOTES:
1. A flow inducer or sleeve must be used if the water enters the well above the motor or if there is insufficient water flow past the motor.
2. The minimum recommended water velocity over 4" motors is 0.25 feet per second.
3. The minimum recommended water velocity over 6, 8, and 10" motors is 0.5 feet per second.

Table B

Guide for Engine-Driven Generators in Submersible Pump Applications

	MINIMUM KILOWATT RATING OF GENERATOR FOR THREE-WIRE SUBMERSIBLE PUMP MOTORS	
MOTOR HP FOR SINGLE OR THREE PHASE UNITS	EXTERNALLY REGULATED GENERATOR	INTERNALLY REGULATED GENERATOR
0.33 HP	1.5 KW	1.2 KW
0.50	2.0	1.5
0.75	3.0	2.0
1.0	4.0	2.5
1.5	5.0	3.0
2.0	7.5	4.0
3.0	10.0	5.0
5.0	15.0	7.5
7.5	20.0	10.0
10.0	30.0	15.0
15.0	40.0	20.0
20.0	60.0	25.0
25.0	75.0	30.0
30.0	100.0	40.0
40.0	100.0	50.0
50.0	150.0	60.0
60.0	175.0	75.0
75.0	250.0	100.0
100.0	300.0	150.0
125.0	375.0	175.0
150.0	450.0	200.0
200.0	600.0	275.0

NOTES:
1. Table is based on typical 80°C rise continuous duty generators with 35% maximum voltage dip during start-up of single-phase and three-phase motors.
2. Contact the manufacturer of the generator to assure the unit has adequate capacity to run the submersible motor.
3. If the generator rating is in KVA instead of kilowatts, multiply the above ratings by 1.25 to obtain KVA.

Table C

Transformer Capacity Required for Three-Phase Submersible Pump Motors

		MINIMUM KVA RATING FOR EACH TRANSFORMER	
THREE-PHASE MOTOR HP	MINIMUM TOTAL KVA REQUIRED*	2 TRANSFORMERS OPEN DELTA OR WYE	3 TRANSFORMERS DELTA OR WYE
1.5	3	2	1
2	4	2	1 ½
3	5	3	2
5	7 ½	5	3
7.5	10	7 ½	5
10	15	10	5
15	20	15	7 ½
20	25	15	10
25	30	20	10
30	40	25	15
40	50	30	20
50	60	35	20
60	75	40	25
75	90	50	30
100	120	65	40
125	150	85	50
150	175	100	60
200	230	130	75

* Pump motor KVA requirements only, and does not include allowances for other loads.

Table D

Submersible Pump Cable Selection Chart (60 Hz)

The following tables list the recommended copper cable sizes and various cable lengths for submersible pump motors.

These tables comply with the 1978 edition of the National Electric Table 310-16, Column 2 for 75°C wire. The ampacity (current carrying properties of a conductor) have been divided by 1.25 per the N.E.C., Article 430-22, for motor branch circuits based on motor amps at rated horsepower.

To assure adequate starting torque, the maximum cable lengths are calculated to maintain 95% of the service entrance voltage at the motor when the motor is running at maximum nameplate amps. Cable sizes larger than specified may always be used and will reduce power usage.

The use of cables smaller than the recommended sizes will void the warranty. Smaller cable sizes will cause reduced starting torque and poor motor operation.

SINGLE-PHASE MOTOR MAXIMUM CABLE LENGTH (Motor to service entrance)(2)

MOTOR RATING		COPPER WIRE SIZE												
VOLTS	HP	14	12	10	8	6	4	2	0	00	000	0000	250	300
115	⅓	130	210	340	540	840	1300	1960	2910					
	½	100	160	250	390	620	960	1460	2160					
230	⅓	550	880	1390	2190	3400	5250	7960						
	½	400	650	1020	1610	2510	3880	5880						
	¾	300	480	760	1200	1870	2890	4370	6470					
	1	250	400	630	990	1540	2380	3610	5360	6520				
	1½	190	310	480	770	1200	1870	2850	4280	5240				
	2	150	250	390	620	970	1530	2360	3620	4480				
	3	120	190	300	470	750	1190	1850	2890	3610				
	5			180	280	450	710	1110	1740	2170				
	7½				200	310	490	750	1140	1410				
	10					250	390	600	930	1160				

CAUTION: Use of wire size smaller than listed will void warranty.

FOOTNOTES:

1. If aluminum conductor is used, multiply lengths by 0.5. Maximum allowable length of aluminum is considerably shorter than copper wire of same size.
2. The portion of the total cable which is between the service entrance and a 3Ø motor starter should not exceed 25% of the total maximum length to assure reliable starter operation. Single-phase control boxes may be connected at any point of the total cable length.
3. Cables #14 to #0000 are AWG sizes, and 250 to 300 are MCM sizes.

(con't)

THREE-PHASE MOTOR MAXIMUM CABLE LENGTH
(Motor to service entrance)(2)

MOTOR RATING		COPPER WIRE SIZE												
VOLTS	HP	14	12	10	8	6	4	2	0	00	000	0000	250	300
208	1½	310	500	790	1260									
	2	240	390	610	970	1520								
	3	180	290	470	740	1160	1810							
	5		170	280	440	690	1080	1660						
	7½			200	310	490	770	1180	1770					
	10				230	370	570	880	1330	1640				
	15					250	390	600	910	1110	1340			
	20						300	460	700	860	1050	1270		
	25							370	570	700	840	1030	1170	
	30							310	470	580	700	850	970	1110
230	1½	360	580	920	1450									
	2	280	450	700	1110	1740								
	3	210	340	540	860	1340	2080							
	5		200	320	510	800	1240	1900						
	7½			230	360	570	890	1350	2030					
	10				270	420	660	1010	1520	1870				
	15					290	450	690	1040	1280	1540			
	20						350	530	810	990	1200	1450		
	25						280	430	650	800	970	1170	1340	
	30							350	540	660	800	970	1110	1270
460	1½	1700												
	2	1300	2070											
	3	1000	1600	2520										
	5	590	950	1500	2360									
	7½	420	680	1070	1690	2640								
	10	310	500	790	1250	1960	3050							
	15			540	850	1340	2090	3200						
	20			410	650	1030	1610	2470	3730					
	25				530	830	1300	1990	3010	3700				
	30				430	680	1070	1640	2490	3060	3700			
	40						790	1210	1830	2250	2710	3290		
	50						640	980	1480	1810	2190	2650	3010	
	60							830	1250	1540	1850	2240	2540	2890
	75								1030	1260	1520	1850	2100	2400
	100									940	1130	1380	1560	1790
	125											1080	1220	1390
	150												1050	1190
	200												1080	1300
	250													1080
575	1½	2620												
	2	2030												
	3	1580	2530											
	5	920	1480	2330										
	7½	660	1060	1680	2650									
	10	490	780	1240	1950									
	15		530	850	1340	2090								
	20			650	1030	1610	2520							
	25			520	830	1300	2030	3110						
	30				680	1070	1670	2560	3880					
	40					790	1240	1900	2860	3510				
	50						1000	1540	2310	2840	3420			
	60						850	1300	1960	2400	2890	3500		
	75							1060	1600	1970	2380	2890	3290	
	100								1190	1460	1770	2150	2440	2790

CAUTION: Use of wire size smaller than listed will void warranty.

FOOTNOTES:

1. If aluminum conductor is used, multiply lengths by 0.5. Maximum allowable length of aluminum is considerably shorter than copper wire of same size.
2. The portion of the total cable which is between the service entrance and a 3Ø motor starter should not exceed 25% of the total maximum length to assure reliable starter operation. Single-phase control boxes may be connected at any point of the total cable length.
3. Cables #14 to #0000 are AWG sizes, and 250 to 300 are MCM sizes.

Table E

Electrical Data
Submersible Pump Motors - 60 Hz

GRUNDFOS MOTORS

4 INCH (Three Wire)

Rated HP	Volts	PH	Service Factor	Rated HP Amps	Service Factor Amps	Circuit Breaker or Standard Fuse	Dual Element Fuse	KVA Code	Locked Rotor Amps	Winding Resistance (Ohms) BY	RY
1/3	230	1	1.75	3.8	4.8	15	5	M	15.1	5.8-7.1	19.3-23.5
1/2	230	1	1.60	4.9	6.4	15	7	L	19.9	4.3-5.3	18.6-22.8
3/4	230	1	1.50	7.0	8.3	20	9	K	28.5	2.9-3.5	12.1-14.7
1	230	1	1.40	7.7	9.7	25	12	J	34.0	2.4-3.0	10.2-12.4
1 1/2	230	1	1.30	10.2	12.5	30	15	H	44.0	2.0-2.4	4.1- 5.1
	230	3	1.30	5.7	6.8	20	8	K	31.0	3.8- 4.2	
	460	3	1.30	2.8	3.4	15	4	K	15.5	15.0-16.6	
	575	3	1.30	2.3	2.8	15	3	K	12.5	24.4-27.0	
2	230	3	1.25	6.8	8.3	20	10	J	39.0	2.8- 3.2	
	460	3	1.25	3.4	4.2	15	5	J	19.5	13.1-14.5	
	575	3	1.25	2.7	3.4	15	4	J	15.5	17.6-19.4	
3	230	3	1.15	9.7	11.2	30	15	H	51.0	2.1- 2.3	
	460	3	1.15	4.8	5.6	15	7	H	25.5	8.6- 9.4	
	575	3	1.15	3.9	4.5	15	6	H	20.5	12.4-13.6	
5	230	3	1.15	15.2	17.8	45	20	H	89.0	1.1- 1.3	
	460	3	1.15	7.6	8.9	25	10	H	45.0	4.8- 5.2	
	575	3	1.15	6.1	7.2	20	8	H	36.0	6.9- 7.7	

FRANKLIN MOTORS

4 INCH (Two Wire)

1/3	115	1	1.75	7.0	8.9	25	10.0	S	48.4	1.5-1.9
	230	1	1.75	3.5	4.4	15	5.0	S	24.2	6.0-7.4
1/2	115	1	1.60	9.6	11.9	30	15.0	R	62.4	1.0-1.3
	230	1	1.60	4.8	5.9	15	7.0	R	31.2	4.2-5.2
3/4	230	1	1.50	6.4	8.0	20	9.0	N	40.2	2.7-3.4
1	230	1	1.40	8.2	9.6	25	12.0	M	46.0	2.2-2.8
1 1/2	230	1	1.30	10.6	13.1	35	15.0	L	56.8	1.5-1.9

4 INCH (Three Wire)

										BY	RY
1/3	115	1	1.75	7.0	8.9	20	8	N	32.8	1.5-1.9	5.7- 7.1
	230	1	1.75	3.5	4.4	15	5	N	16.4	6.0-7.4	23.4-28.6
1/2	115	1	1.60	9.6	11.9	30	15	M	46.0	1.0-1.3	3.8- 4.7
	230	1	1.60	4.8	5.9	15	7	M	23.1	4.2-5.2	15.5-19.6
3/4	230	1	1.50	6.4	8.0	20	9	M	33.1	2.7-3.4	11.0-13.6
1	230	1	1.40	8.0	9.6	25	12	L	42.0	2.2-2.8	9.5-11.7
1 1/2	230	1	1.30	10.0	11.6	30	15	J	52.8	1.5-1.9	6.2- 8.5
2	230	1	1.25	10.0	13.1	35	15	G	51.0	1.6-2.3	5.2- 7.1
3	230	1	1.15	14.0	16.5	45	20	F	71.0	0.9-1.5	3.0- 4.9
5	230	1	1.15	23.0	27.5	80	30	F	118.0	0.7-1.0	2.1- 2.8
1 1/2	200	3	1.30	6.1	7.2	20	9	K	39.0	2.4- 3.4	
	230	3	1.30	5.3	6.3	20	8	K	34.0	3.2- 4.1	
	460	3	1.30	2.7	3.1	15	4	K	17.0	11.3-15.0	
	575	3	1.30	2.2	2.5	15	3	K	14.0	15.1-26.0	
2	200	3	1.25	7.8	9.2	25	10	K	39.0	1.9- 2.4	
	230	3	1.25	6.8	8.0	20	10	L	46.0	2.4- 3.0	
	460	3	1.25	3.4	4.0	15	5	L	23.0	9.7-12.0	
	575	3	1.25	2.8	3.2	15	4	L	18.0	13.6-18.9	

(con't)

FRANKLIN MOTORS (continued)

4 INCH (Three Wire)

Rated HP	Volts	PH	Service Factor	Rated HP Amps	Service Factor Amps	Circuit Breaker or Standard Fuse	Dual Element Fuse	KVA Code	Locked Rotor Amps	Winding Resistance (Ohms)
3	200	3	1.15	10.9	12.2	35	15	K	70.0	1.3 - 1.7
	230	3	1.15	9.5	10.6	30	15	K	61.0	1.8 - 2.2
	460	3	1.15	4.8	5.3	15	7	K	31.0	7.0 - 8.7
	575	3	1.15	3.8	4.2	15	6	K	24.0	11.0 - 13.6
5	200	3	1.15	18.3	20.0	50	25	K	120.0	0.7 - 0.9
	230	3	1.15	15.9	17.4	45	20	K	104.0	0.9 - 1.2
	460	3	1.15	8.0	8.7	25	10	K	52.0	3.6 - 4.4
	575	3	1.15	6.4	7.0	20	8	K	42.0	5.6 - 6.9
7½	200	3	1.15	26.5	29.3	80	35	J	158.0	0.55 - 0.68
	230	3	1.15	23.0	25.5	70	30	J	143.0	0.76 - 0.93
	460	3	1.15	11.5	12.8	35	15	J	72.2	2.4 - 3.4
	575	3	1.15	9.2	10.2	30	12	J	57.0	3.5 - 5.1
10	460	3	1.15	16.8	17.6	45	20	K	116.0	1.8 - 2.3
	575	3	1.15	13.4	14.1	40	20	K	93.0	2.8 - 3.5

6 INCH

										BY	RY
5	230	1	1.15	23.9	29.5	80	35	E	102.0	0.55-0.68	1.30-1.60
7½	230	1	1.15	36.5	42.0	100	45	F	165.0	0.36-0.50	0.92-1.20
10	230	1	1.15	45.0	51.0	150	60	E	204.0	0.27-0.33	0.80-0.99
5	200	3	1.15	17.5	19.1	50	25	H	98.9	0.70-0.80	
	230	3	1.15	15.0	16.6	45	20	H	86.0	0.90-1.10	
	460	3	1.15	7.5	8.3	25	10	H	43.0	3.50-4.40	
	575	3	1.15	6.0	6.4	20	8	H	34.4	5.90-7.20	
7½	200	3	1.15	25.1	28.3	70	30	H	149.5	0.40-0.50	
	230	3	1.15	21.8	24.6	70	30	H	130.0	0.60-0.70	
	460	3	1.15	10.9	12.3	30	15	H	65.0	2.20-2.70	
	575	3	1.15	8.7	9.8	25	12	H	52.0	3.60-4.40	
10	200	3	1.15	32.7	37.0	100	40	H	197.8	0.33-0.42	
	230	3	1.15	28.4	32.2	80	35	H	172.0	0.44-0.55	
	460	3	1.15	14.2	16.1	40	20	H	86.0	1.80-2.20	
	575	3	1.15	11.4	12.9	35	15	H	68.8	2.90-3.50	
15	200	3	1.15	47.8	54.5	150	60	H	306.0	0.22-0.27	
	230	3	1.15	41.6	47.4	125	60	H	266.0	0.27-0.33	
	460	3	1.15	20.8	23.7	60	30	H	133.0	1.10-1.30	
	575	3	1.15	16.6	19.0	50	25	H	106.4	1.70-2.10	
20	200	3	1.15	61.9	69.7	200	80	J	416.3	0.14-0.17	
	230	3	1.15	53.8	60.6	175	70	J	362.0	0.20-0.25	
	460	3	1.15	26.9	30.3	80	35	J	181.0	0.76-0.94	
	575	3	1.15	21.5	24.2	70	30	J	144.8	1.20-1.50	
25	200	3	1.15	77.1	86.3	225	100	J	552.0	0.11-0.14	
	230	3	1.15	67.0	75.0	200	90	J	480.0	0.15-0.19	
	460	3	1.15	33.5	37.5	100	45	J	240.0	0.59-0.73	
	575	3	1.15	26.8	30.0	80	35	J	192.0	1.00-1.20	
30	200	3	1.15	90.9	104.0	300	125	J	602.6	0.10-0.12	
	230	3	1.15	79.0	90.4	250	100	J	524.0	0.12-0.15	
	460	3	1.15	39.5	45.2	125	50	J	262.0	0.48-0.60	
	575	3	1.15	31.6	36.2	100	40	J	209.6	0.78-0.95	
40	460	3	1.15	53.5	62.0	150	70	J	397.0	0.32-0.40	
	575	3	1.15	42.8	49.6	125	70	J	317.6	0.60-0.74	
50	460	3	1.15	67.7	77.0	200	90	H	414.0	0.25-0.32	
	575	3	1.15	54.2	61.6	150	70	H	331.2	0.39-0.48	

8 INCH

40	460	3	1.15	53.0	60.0	175	70	H	342	0.26-0.28
50	460	3	1.15	66.0	75.0	200	90	H	433	0.18-0.22
60	460	3	1.15	77.0	89.0	225	100	J	560	0.15-0.17
75	460	3	1.15	97.0	110.0	300	125	J	750	0.11-0.13
100	460	3	1.15	128.0	148.0	400	175	J	1000	0.08-0.09
125	460	3	1.15	165.0	189.0	500	225	K	1300	0.08-0.10
150	460	3	1.15	193.0	221.0	600	250	K	1600*	0.07-0.08

* For 6 lead wye connected motor, divide by 3.

HITACHI MOTORS

Rated HP	Volts	PH	Service Factor	Rated HP Amps	Service Factor Amps	Circuit Breaker or Standard Fuse	Dual Element Fuse	KVA Code	Locked Rotor Amps	Winding Resistance (Ohms) BY	RY
6 INCH											
5	230	1	1.15	23.8	27.1	80	35	F	124	0.49	2.0
	230	3	1.15	15.0	16.6	45	20	J	100	0.80	
	460	3	1.15	7.5	8.3	25	10	J	50	3.0	
7½	230	1	1.15	35.2	40.9	125	45	F	167	0.38	1.3
	230	3	1.15	21.8	24.4	70	30	J	144	0.69	
	460	3	1.15	10.9	12.2	35	15	J	72	2.6	
10	230	1	1.15	48.0	54.0	175	60	E	202	0.3	1.0
	230	3	1.15	28.6	32.0	90	35	K	208	0.44	
	460	3	1.15	14.3	16.0	45	20	K	104	1.6	
15	230	1	1.15	70.8	84.9	250	100	D	275	0.23	0.67
	230	3	1.15	41.4	46.2	125	50	K	320	0.31	
	460	3	1.15	20.7	23.1	60	25	K	160	1.1	
20	230	3	1.15	55.8	63.0	175	70	K	422	0.24	
	460	3	1.15	27.9	31.5	90	35	K	211	0.81	
25	230	3	1.15	67.2	75.4	200	80	J	488	0.21	
	460	3	1.15	33.6	37.7	100	40	J	244	0.66	
30	230	3	1.15	80.0	90.4	250	110	H	530	0.16	
	460	3	1.15	40.0	45.2	125	50	H	265	0.55	
40	460	3	1.15	51.7	58.5	175	70	G	290	0.46	
50	460	3	1.15	66.6	75.9	225	90	H	418	0.40	
60	460	3	1.15	80.1	90.0	250	100	G	435	0.34	
8 INCH											
40	460	3	1.15	50.6	57.4	175	70	H	331	0.35	
50	460	3	1.15	62.6	71.2	225	90	H	401	0.29	
60	460	3	1.15	74.5	84.8	250	100	G	470	0.24	
75	460	3	1.15	94.7	108.0	350	150	H	648	0.22	
100	460	3	1.15	125.5	140.0	450	175	G	763	0.17	
125	460	3	1.15	172.0	192.0	600	200	F	827	0.13	
150	460	3	1.15	187.0	216.0	600	250	E	850	0.13	
10 INCH											
200	460	3	1.15	233.0	270.0	800	275	D	1100	0.09	
250	460	3	1.15	294.0	344.0	900	350	D	1340	0.08	

Table F

Example: Correcting for Three-Phase Power Unbalance

Example: Check for current unbalance for a 230 volt, 3 phase, 60 Hz submersible pump motor, 18.6 full load amps.

Solution: Steps 1 to 3 measure and record amps on each motor drop lead for Hookups 1, 2 and 3.

	Step 1 (Hookup 1)	**Step 2** (Hookup 2)	**Step 3** (Hookup 3)
(T_1)	DL_1 = 25.5 amps	DL_3 = 25 amps	DL_2 = 25.0 amps
(T_2)	DL_2 = 23.0 amps	DL_1 = 24 amps	DL_3 = 24.5 amps
(T_3)	DL_3 = 26.5 amps	DL_2 = 26 amps	DL_1 = 25.5 amps
Step 4	Total = 75 amps	Total = 75 amps	Total = 75 amps
Step 5	Average Current =	Total current = 3 readings	75 = 25 amps 3
Step 6	Greatest amp difference from the average:	(Hookup 1) = 25-23 = 2 (Hookup 2) = 26-25 = 1 (Hookup 3) = 25.5-25 = .5	
Step 7	% Unbalance	(HOOKUP 1) = 2/25 X 100 = 8 (HOOKUP 2) = 1/25 X 100 = 4 (HOOKUP 3) = .5/25 X 100 = 2	

As can be seen, Hookup 3 should be used since it shows the least amount of current unbalance. Therefore, the motor will operate at maximum efficiency and reliability.

By comparing the current values recorded on each leg, you will note the highest value was always on the same leg, L_3. This indicates the unbalance is in the power source. If the high current values were on a different leg each time the leads were changed, the unbalance would be caused by the motor or a poor connection.

If the current is greater than 5%, contact your power company for help.

* For a detailed explanation of three-phase balance procedures, see Three-Phase Motor, section 2, page 6.

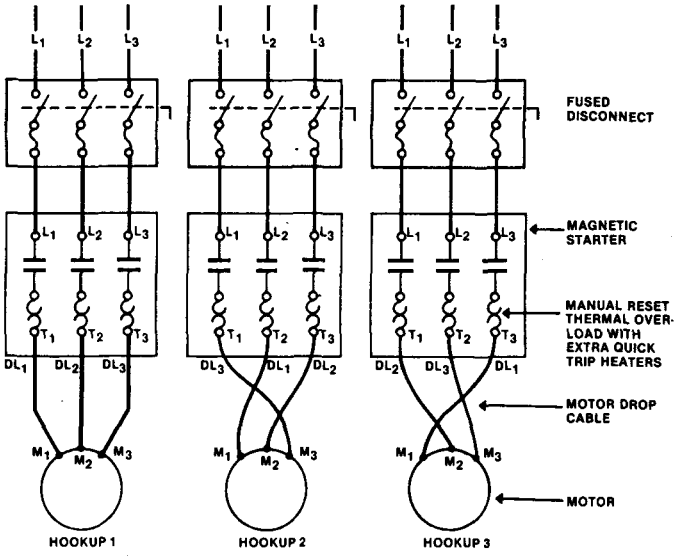

Table G

Total Resistance of Drop Cable (OHMS)

The values shown in this table are for copper conductors. Values are for the total resistance of drop cable from the **control box to the motor and back.**

To determine the resistance:

1. Disconnect the drop cable leads from the control box or panel.
2. Record the size and length of drop cable.
3. Determine the cable resistance from the table.
4. Add drop cable resistance to motor resistance. Motor resistances can be found in the Electrical Data Chart, Table E.
5. Measure the resistance between each drop cable lead using an ohmmeter. Meter should be set on Rx1 and zero-balanced for this measurement.
6. The measured values should be approximately equal to the calculated values.

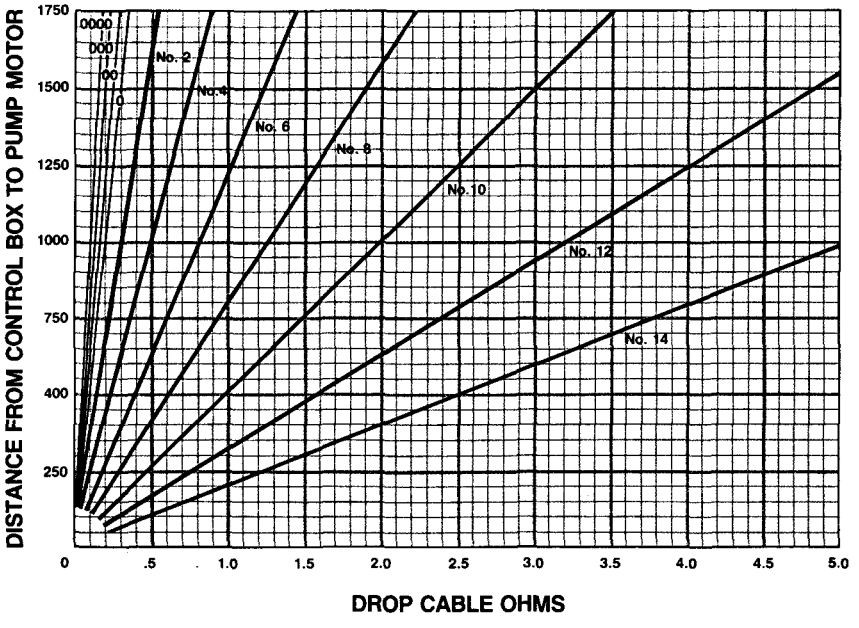

Table H

Overload Protection of Three-Phase Submersible Pump Motors

GRUNDFOS MOTORS

4" DIA. MOTORS

HP	Volts	Starter Size	Furnas Amb. Comp
1½	230	0	K41
	460	0	K32
	575	0	K28
2	230	0	K50
	460	0	K34
	575	0	K31
3	230	0	K54
	460	0	K37
	575	0	K36
5	230	1	K61
	460	0	K50
	575	0	K43

FRANKLIN MOTORS

4" DIA. MOTORS

HP	Volts	Starter Size	Furnas Amb. Comp
1½	200	00	K43
	230	00	K41
	460	00	K29
	575	00	K27
2	200	0	K50
	230	0	K49
	460	00	K33
	575	00	K29
3	200	0	K54
	230	0	K52
	460	0	K37
	575	0	K33
5	200	1	K61
	230	1	K61
	460	0	K49
	575	0	K42
7½	200	1	K68
	230	1	K67
	460	1	K55
	575	1	K52
10	460	1	K58
	575	1	K55

FRANKLIN MOTORS

6" DIA. MOTORS

HP	Volts	Starter Size	Furnas Amb. Comp
5	200	1	K61
	230	1	K61
	460	0	K49
	575	0	K42
7½	200	1	K68
	230	1	K67
	460	1	K55
	575	1	K52
10	200	1¾	K72
	230	1¾	K70
	460	1	K58
	575	1	K55
15	200	2½	K76
	230	2	K75
	460	1¾	K64
	575	1¾	K61
20	200	3	K78
	230	2½	K77
	460	2	K69
	575	2	K64
25	200	3	K86
	230	3	K83
	460	2	K72
	575	2	K69
30	200	3½	K88
	230	3	K87
	460	2½	K74
	575	2½	K72
40	460	3	K77
	575	3	K74
50	460	3	K83
	575	3	K77

8" DIA. MOTORS

40	460	3	K77
50	460	3	K83
60	460	3½	K87
75	460	3½	K89
100	460	4	K94
125	460	5	K29
150	460	5	K32

HITACHI MOTORS

6" DIA. MOTORS

HP	Volts	Starter Size	Furnas Amb. Comp
5	230	1	K58
	460	1	K43
7½	230	1	K64
	460	1	K54
10	230	1¾	K68
	460	1	K58
15	230	2	K74
	460	1¾	K63
20	230	2½	K77
	460	2	K67
25	230	3	K78
	460	2	K72
30	230	3	K86
	460	2½	K73
40	460	3	K75
50	460	3	K78
60	460	3½	K86

8" DIA. MOTORS

40	460	3	K75
50	460	3	K77
60	460	3½	K85
75	460	3½	K88
100	460	4	K89
125	460	4½	K29
150	460	4½	K29

10" DIA. MOTORS

200	460	6	K23
250	460	6	K26

NOTE: Except for starter sizes 4-6, all heaters are for use with Furnas Innova 45 Magnetic Starters.

Limited Warranty

Products manufactured by GRUNDFOS PUMPS CORPORATION (GRUNDFOS) are warranted to the original user only to be free of defects in material and workmanship for a period of 18 months from date of installation, but not more than 24 months from date of manufacture. GRUNDFOS' liability under this warranty shall be limited to repairing or replacing at GRUNDFOS' option, without charge, F.O.B. GRUNDFOS' factory or authorized service station, any product of GRUNDFOS manufacture. GRUNDFOS will not be liable for any costs of removal, installation, transportation, or any other charges which may arise in connection with a warranty claim. Products which are sold but not manufactured by GRUNDFOS are subject to the warranty provided by the manufacturer of said products and not by GRUNDFOS' warranty. GRUNDFOS will not be liable for damage or wear to products caused by abnormal operating conditions, accident, abuse, misuse, unauthorized alteration or repair, or if the product was not installed in accordance with GRUNDFOS' printed installation and operating instructions.

To obtain service under this warranty, the defective product must be returned to the distributor or dealer of GRUNDFOS products from which it was purchased together with proof of purchase and installation date, failure date, and supporting installation data. Unless otherwise provided, the distributor or dealer will contact GRUNDFOS or an authorized service station for instructions. Any defective product to be returned to GRUNDFOS or a service station must be sent freight prepaid; documentation supporting the warranty claim and/or a Return Material Authorization must be included if so instructed.

GRUNDFOS WILL NOT BE LIABLE FOR ANY INCIDENTAL OR CONSEQUENTIAL DAMAGES, LOSSES, OR EXPENSES ARISING FROM INSTALLATION, USE OR ANY OTHER CAUSES. THERE ARE NO EXPRESS OR IMPLIED WARRANTIES, INCLUDING MERCHANTABILITY OR FITNESS FOR A PARTICULAR PURPOSE, WHICH EXTEND BEYOND THOSE WARRANTIES DESCRIBED OR REFERRED TO ABOVE.

Some jurisdictions do not allow the exclusion or limitation of incidental or consequential damages and some jurisdictions do not allow limitations on how long implied warranties may last. Therefore, the above limitations or exclusions may not apply to you. This warranty gives you specific legal rights and you may also have other rights which vary from jurisdiction to jurisdiction.

GRUNDFOS®

GRUNDFOS Pumps Corp. • 2555 Clovis Ave. • Clovis, CA 93612
Support Centers: Allentown, PA • Atlanta, GA • Mississauga, Ontario, Canada

L-SP-TL-031	7/5/91
PRINTED IN USA	

SP4"

Installation and Operating Instructions

4-Inch Stainless Steel Submersible Pumps

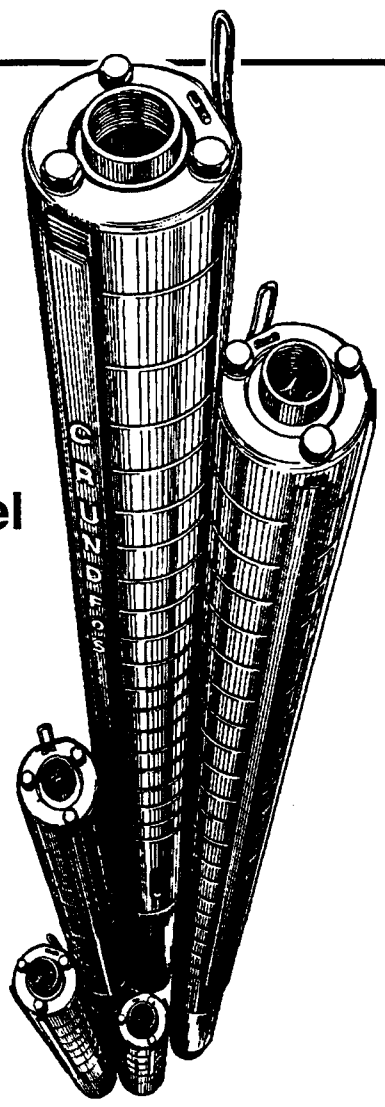

Please leave these instructions with the pump for future reference

GRUNDFOS

SAFETY WARNING

Electrical Work

WARNING: Reduced risk of electric shock during operation of this pump requires the provision of acceptable grounding. If the means of connection to the supply connected box is other than grounded metal conduit, ground the pump back to the service by connecting a copper conductor (at least the size of the circuit supplying the pump) to the grounding screw provided within the wiring compartment.

Pre-Installation Checklist

1. Well Preparation

If the pump is to be installed in a new well then the well should be fully developed and bailed or blown free of cuttings and sand. The stainless steel construction of the GRUNDFOS submersibles makes it resistant to abrasion; however, no pump made of any material can forever withstand the destructive wear that occurs when constantly pumping sandy water.
If this pump is used to replace an oil-filled submersible or oil-lubricated line-shaft turbine in an existing well, the well must be blown or bailed clear of oil.

2. Make Sure You Have the Right Pump

Determine the maximum depth of the well, and the drawdown level at the pump's maximum capacity. Pump selection and setting depth should be made based on this data.

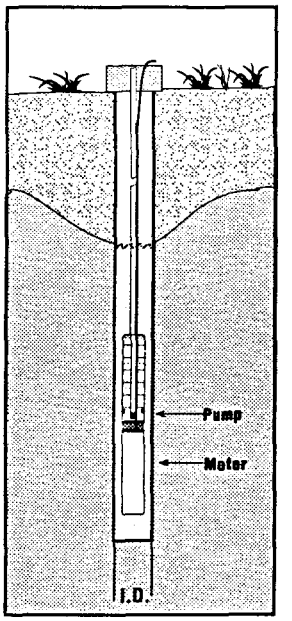

3. Pumped Fluid Requirements

Submersible well pumps are designed for pumping clear, cold water; free of air or gases. Decreased pump performance and life expectancy can occur if the water is not clear, cold or contains air or gases. Water temperature should not exceed 102°F.

A check should be made to ensure that the installation depth of the pump will always be at least three feet below the maximum drawdown level of the well. The bottom of the motor should never be installed lower than the top the screen or within five feet of the well bottom.

Ensure that the requirement for minimum flow past the motor is met, as shown in the table below:

Minimum Water Flow Requirements for Franklin 4-Inch Submersible Pump Motors

Minimum Diameter	Casing or Sleeve I.D. in Inches	Min. GPM Flow Passing the Motor
4-Inch	4	1.2
	5	7
	6	13
	7	21
	8	30

NOTES:

a. For Franklin Motors Only: A flow inducer or sleeve must be used if the water enters the well above the motor or if there is insufficient water flow past the motor.
b. For Franklin Motors Only: The minimum water velocity over 4" motors is 0.25 feet per second.
c. Grundfos 4" submersible motors do not require a minimum flow or flow sleeve.

Pre-Installation Checklist

4. Splicing the Motor Cable

If the splice is carefully made, it will be as efficient as any other portion of the cable, and will be completely watertight. There are a number of cable splicing kits available today - epoxy filled, rubber-sealed and so on. Many perform well if the manufacturer's directions are followed carefully. If one of these kits is not used, we recommend the following method for splicing the motor cable:

Examine the motor cable and drop cable carefully for damage. Cut the motor leads off in a staggered manner. Cut the ends of the drop cable so that the ends match up with the motor leads. Be sure to match the colors. Strip back and trim off one-half inch of insulation from each lead, making sure to scrape the wire bare to obtain a good connection. Be careful not to damage the copper conductor when stripping off the insulation. Insert a properly sized Sta-Kon-type connector on each pair of leads, again making sure that colors are matched. Using Sta-Kon crimping pliers, indent the lugs. Be sure to squeeze down hard on the pliers, particularly when using large cable. Form a piece of electrical insulation putty tightly around each Sta-Kon. The putty should overlap on the insulation of the wire. Use a good quality tape such as ***#33 Scotch Waterproof*** **or** ***Plymouth Rubber Company Slipknot Grey.*** Wrap each wire and joint tightly for a distance of about 2 1/2" inches on each side of the joint. Make a minimum of four passes over each joint and overlap each pass approximately one inch to assure a completely watertight seal.

Installation Procedures

1. Attach the Safety Hook to the Pump

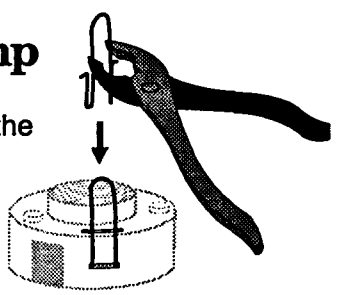

Connect the safety hook to the pump using pliers to squeeze the sides of the hook so it fits into the slot in the pump.

2. Attach the Pump to the Pipe

A back-up wrench should be used when riser pipe is attached to the pump. The pump should only be gripped by the flats on the top of the discharge chamber. Under no circumstances grip the body of the pump, cable guard or motor.

When tightened down, the threaded end of the first section of the riser pipe or the nipple must not come in contact with the check valve retainer in the discharge chamber of the pump. After the first section of the riser pipe has been attached to the pump, the lifting cable or elevator should be clamped to the pipe. Do not clamp the pump. When raising the pump and riser section, be careful not to place bending stress on the pump by picking it up by the pump-end only. It is recommended that plastic-type riser pipe be used only with the smaller domestic submersibles. The manufacturer or representative should be contacted to ensure the pipe type and physical characteristics are suitable for this use. Use the correct joint compound recommended by the specific pipe manufacturer. Besides making sure that joints are fastened, we recommend

(continued on next page)

the use of a torque arrestor when using plastic pipe.
Do not connect the first plastic riser section directly to the pump. Always attach a metallic nipple or adapter into the discharge chamber. The threaded end of the nipple or adapter must not come in contact with the check valve retainer in the discharge chamber when tightened down.

3. Lower the Pump Into the Well

Make sure the electrical cables are not cut or damaged in any way when the pump is being lowered in the well. Do not use the power cables to support the weight of the pump.

To protect against surface water entering the well and contaminating the water source, the well should be finished off above grade utilizing a locally approved well seal or pitless adaptor unit. We recommend that steel riser pipes always be used with the larger submersibles. A pipe thread compound should be used on all joints. Make sure that the joints are adequately tightened in order to resist the tendency of the motor to loosen the joints when stopping and starting.

The drop cable should be secured to the riser pipe at frequent intervals to prevent sagging, looping and possible cable damage. Nylon cable clips or waterproof tape may be used. The cable splice should be protected by securing it with clips or tape just above each joint.

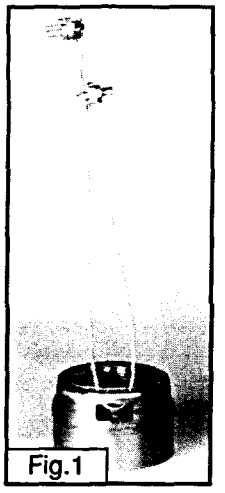
Fig.1

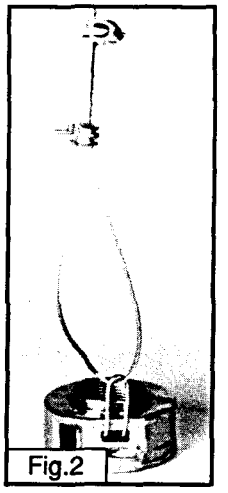
Fig.2

IMPORTANT: *Plastic pipe tends to stretch under load. This stretching must be taken into account when securing the cable to the riser pipe. Leave three to four inches of slack between clips or taped points. This tendency for plastic pipe to stretch will also affect the calculation of the pump setting depth. As a general rule, you can estimate that plastic pipe will stretch to approximately 2% of its length. When plastic riser pipe is used, it is recommended that a safety cable be attached to the pump to lower and raise it. The discharge chamber of GRUNDFOS 4-inch submersibles is designed to accommodate this cable.*

(See Figures 1 & 2)

Check Valves: A check valve should always be installed at the surface of the well and one at a max. of 25' above static water level. In addition, for installations deeper than 200 feet, check valves should be installed at no more than 200 foot intervals.

4. Electrical Connections

WARNING: Reduced risk of electric shock during operation of this pump requires the provision of acceptable grounding. If the means of connection to the supply connected box is other than grounded metal conduit, ground the pump back to the service by connecting a copper conductor (at least the size of the circuit supplying the pump) to the grounding screw provided within the wiring compartment.

Verification of the electrical supply should be made to ensure the voltage, phase and frequency match that of the motor. Motor electrical data can be found on page 6. If voltage variations are larger than ± 10%, do not operate the pump. Single-phase motor control boxes should be connected as shown on the wiring diagram mounted on the inside cover of the control box supplied with the motor. The type of wire used between the pump control boxes should be approved for submersible pump application. The conductor insulation should be type RW, RUW, TW or equivalent.

A high-voltage surge arrestor should be used to protect the motor against lightning and switching surges. Lightning voltage surges in power lines are caused when lightning strikes somewhere in the area. Switching surges are caused by the opening and closing of switches on the main high-voltage distribution power lines.

The correct voltage-rated surge arrestor should be installed on the supply (line) side of the control box or starter (see Figure 3). The arrestor must be grounded in accordance with the National Electric Code and local governing regulations.

PUMPS SHOULD NEVER BE STARTED UNLESS THE PUMP IS TOTALLY SUBMERGED. SEVERE DAMAGE MAY BE CAUSED TO THE PUMP AND MOTOR IF THEY ARE RUN DRY.

The control box shall be permanently grounded in accordance with the National Electric Code and local governing codes or regulations. The ground wire should be a bare stranded copper conductor at least the same size as the drop cable wire size. Ground wire should be as short a distance as possible and securely fastened to a true grounding point. True grounding points are considered to be: a grounding rod driven into the water strata; steel well casing submerged into the water lower than the pump setting level; and steel discharge pipes without insulating couplings. If plastic discharge pipe and well casing are used, a properly sized bare copper wire should be connected to a stud on the motor and run to the control panel. Do not ground to a gas supply line. Connect the grounding wire to the ground point first, then to the terminal in the control box.

Single Phase Hookup

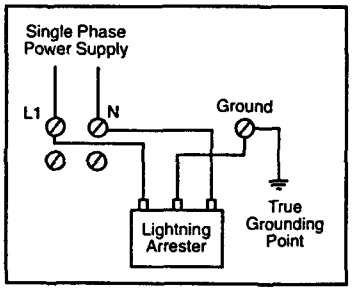

Fig.3

Installation Procedures

Single-Phase 2-Wire Wiring Diagram for Submersible Motors

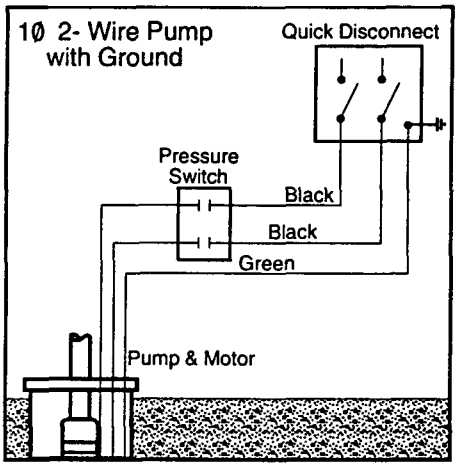

Fig.4

Three-Phase Wiring Diagram for Submersible Motors

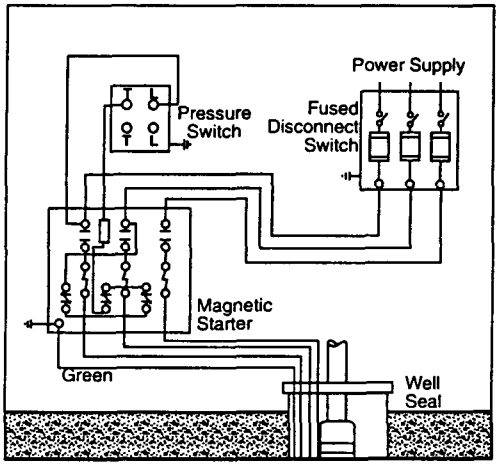

Fig.5

Single-Phase 3-Wire Control Box for Submersible Motors

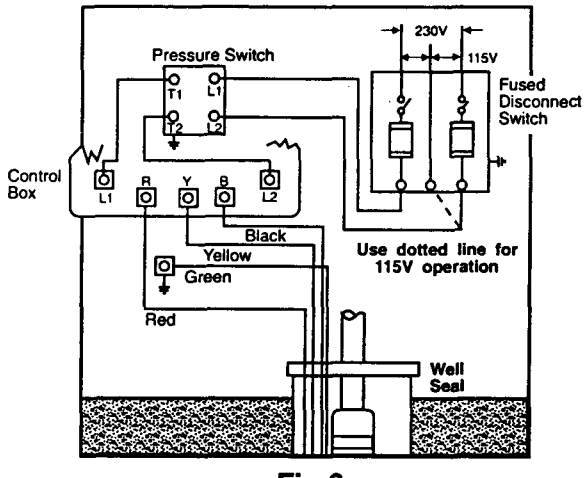

Fig.6

5. Starting the Pump for the First Time

A. Attach a temporary horizontal length of pipe to the riser pipe.
B. Install a gate valve and another short length of pipe to the temporary pipe.
C. Adjust the gate valve one-third of the way open.
D. Verify that the electrical connections are in accordance with the wiring diagram.
E. After proper rotation has been checked, start the pump and let it operate until the water runs clear of sand, silt and other impurities.
F. Slowly open the valve in small increments as the water clears until the valve is all the way open. The pump should not be stopped until the water runs clear.
G. If the water is clean and clear when the pump is first started, the valve should still be opened until it is all the way open.

Motor Information

GRUNDFOS 4 Inch (Two-Wire) Motors 60 Hz

Control Box Not Required

HP	Ph	VOLT	Ser. Fact.	Circ. Brk. or Stnd. Fuse	Dual Element Fuse	AMPERAGE			FULL LOAD		Line-to-Line Resistance(Ohms)		KVA Code **	Max. Thrust (lbs)
						Full Load	Lock Rotor	S.F. Amps	Eff.	Power Factor	Blk-Yel	Red-Yel		
											Delta			
SINGLE-PHASE														
1/3	1	230	1.75	15	5	3.0	25.5	4.4	47.3	63.0	6.8-8.2		S	750
1/2	1	230	1.60	15	7	4.3	34.5	5.9	50.6	64.7	5.2-6.3		R	750
3/4	1	230	1.50	20	9	6.6	40.5	8.0	57.0	70.0	3.2-3.8		N	750
1	1	230	1.40	25	12	8.0	47.4	9.6	59.8	74.3	2.5-3.1		M	750
1 1/2	1	230	1.30	35	15	10.6	60.8	13.1	64.3	77.2	1.9-2.3		L	750

Grundfos 4 Inch (Three-Wire*) Motors

SINGLE-PHASE

1/3	1	230	1.75	15	5	3.0	14.0	4.4	47.0	63.0	6.8-8.31-7.3-21.1		L	750
1/2	1	230	1.60	15	7	4.3	20.0	5.9	50.7	64.6	4.7-5.71-5.8-19.6		L	750
3/4	1	230	1.50	20	9	6.6	30.8	8.0	57.3	70.0	3.2-3.91- 4-17.2		L	750
1	1	230	1.40	25	12	8.0	36.3	9.6	59.8	74.5	2.6-3.1-10.3-12.5		K	750
1 1/2	1	230	1.30	30	15	9.7	44.0	11.5	67.5	84.1	1.9-2.3 - 7.8-9.6		H	750

THREE-PHASE

											Three Phase Overload Protection Starter Size	Furnas Amb. Comp.	Line to Line Resist. (Ohms)		
2	3	230	1.25	20	10	6.0	12.8	7.5	73.0	86.8	0	K50	3.0	J	750
		460	1.25	10	5	3.0	19.0	3.8	73.0	86.6	0	K34	12.1	J	750
		575	1.25	10	4	2.4	15.2	3.0	73.0	86.8	0	K31	18.8	J	750
3	3	230	1.15	30	15	9.6	51.0	11.2	68.5	83.8	0	K54	2.2	H	1000
		460	1.15	15	7	4.8	25.5	5.6	68.5	83.8	0	K37	9.0	H	1000
		575	1.15	15	6	3.8	20.4	4.5	68.5	83.8	0	K36	13.0	H	1000
5	3	230	1.15	40	25	15.2	89	17.8	71.9	80.0	1	K61	1.2	H	1000
		460	1.15	20	12	7.6	45	8.9	71.9	80.0	0	K50	5.0	H	1000
		575	1.15	15	9	6.1	35	7.1	71.9	80.0	0	K43	7.3	H	1000

***All Grundfos 4" motors have a ground (green) wire.**

Franklin Motors

(Refer to the Franklin Submersible Motors Application Maintenance Manual)

Motor Information

Maximum Cable Length
Motor Service to Entrance
(Length in feet)

SINGLE-PHASE 60 HZ

Motor Rating		Copper Wire Size								
VOLTS	HP	14	12	10	8	6	4	2	0	00
115	1/3	130	210	340	540	840	1300	1960	2910	
	1/2	100	160	250	390	620	960	1460	2160	
230	1/3	550	880	1390	2190	3400	5250	7960		
	1/2	400	650	1020	1610	2510	3880	5880		
	3/4	300	480	760	1200	1870	2890	4370	6470	
	1	250	400	630	990	1540	2380	3610	5360	6520
	1 1/2	190	310	480	770	1200	1870	2850	4280	5240
	2	150	250	390	620	970	1530	2360	3620	4480
	3	120	190	300	470	750	1190	1850	2890	3610
	5			180	280	450	710	1110	1740	2170

THREE-PHASE 60 HZ

VOLTS	HP	14	12	10	8	6	4	2
208	1 1/2	310	500	790	1260			
	2	240	390	610	970	1520		
	3	180	290	470	740	1160	1810	
		5170	280	4690	1080			1660
230	1 1/2	360	580	920	1450			
	2	280	450	700	1110	1740		
	3	210	340	540	860	1340	2080	
	5		200	320	510	800	1240	1900
460	1 1/2	1700						
	2	1300	2070					
	3	1000	1600	2520				
	5	590	950	1500	2360			
575	1 1/2	2620						
	2	2030						
	3	1580	2530					
	5	920	1480	2330				

FOOTNOTES:

1. If aluminum conductor is used, multiply lengths by 0.5. Maximum allowable length of aluminum is considerably shorter than copper wire of same size.
2. The portion of the total cable which is between the service entrance and a 3Ø motor starter should not exceed 25% of the total maximum length to ensure reliable starter operation. Single-phase control boxes may be connected at any point of the total cable length.
3. Cables #14 to #0000 are AWG sizes, and 250 to 300 are MCM sizes.

Troubleshooting

SUPPLY VOLTAGE

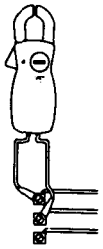

How to Measure
By means of a voltmeter, which has been set to the proper scale, measure the voltage at the control box. On single-phase units, measure between line and neutral.

What it Means
When the motor is under load, the voltage should be within 10% of the nameplate voltage. Larger voltage variation may cause winding damage. Large variations in the voltage indicate a poor electrical supply and the pump should not be operated until these variations have been corrected.
If the voltage constantly remains high or low, the motor should be changed to the correct supply voltage.

CURRENT MEASUREMENT

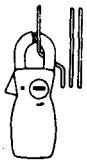

How to Measure
By use of an ammeter, set on the proper scale, measure the current on each power lead at the control box. See page 6, for motor amp draw information.
Current should be measured when the pump is operating at a constant discharge pressure with the motor fully loaded.

What it Means
If amp draw exceeds the listed service factor amps (SFA), check for the following:
1. Loose terminals in control box or possible cable defect. Check winding and insulation resistances.
2. Too high or low supply voltage.
3. Motor windings are shorted.
4. Pump is damaged causing a motor overload.

WINDING RESISTANCE

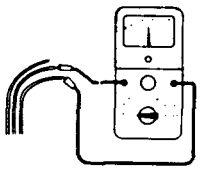

How to Measure
Turn off power and disconnect the drop cable leads in the control box. Using an ohmmeter, set scale selectors to Rx1 for values under 10 ohms and Rx10 for values over 10 ohms.
Zero-adjust the meter and measure the resistance between leads. Record the values. Motor resistance values can be found on page 6.

What it Means
If all the ohm values are normal, and the cable colors are correct, the windings are not damaged. If any one ohm value is less than normal, the motor may be shorted. If any one ohm value is greater than normal, there is a poor cable connection or joint. The windings or cable may also be open.
If some of the ohm values are greater than normal and some less, the drop cable leads are mixed. To verify lead colors, see resistance values on page 6.

INSULATION RESISTANCE

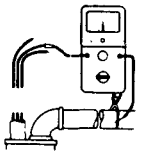

How to Measure
Turn off power and disconnect the drop cable leads in the control box. Using an ohm or mega ohmmeter, set the scale selector to Rx100k and zero-adjust the meter. Measure the resistance between the lead and ground(discharge pipe or well casing,if steel).

What it Means
For ohm values, refer to table below. Motors of all Hp, voltage, phase and cycle duties have the same value of insulation resistance.

OHM VALUE	MEGOHM VALUE	CONDITION OF MOTOR AND LEADS
		Motor not yet installed:
2,000,000(or more)	2.0	New Motor
1,000,000(or more)	1.0	Used motor which can be reinstalled in the well.
		Motor in well (Ohm readings are for drop cable plus motor):
500,000-1,000,000	0.5-1.0	A motor in reasonably good condition.
20,000-50,000	0.02-0.5	A motor which may have been damaged by lightning or with damaged leads. Do not pull the pump for this reason.
10,000-20,000	0.01-0.02	A motor which definitely has been damaged or with damaged cable. The pump should be pulled and repairs made to the cable or the motor replaced. The motor will still operate, but probably not for long.
less than 10,000	0-0.01	A motor which has failed or with completely destroyed cable insulation. The pump must be pulled and the cable repaired or the motor replaced. The motor will not run.

Troubleshooting

Pump Won't Start

Possible Cause	Check This By . . .	Correct This By . . .
No power at the motor	Check for voltage at the control box or panel.	If there is no voltage at the control panel, check the feeder panel for tripped circuits and reset those circuits.
Fuses are blown or the circuit breakers have tripped.	Turn off the power and remove the fuses. Check for continuity with an ohmmeter.	Replace the blown fuses or reset the circuit breaker. If the new fuses blow or the circuit breaker trips, the electrical installation, motor, and wires must be checked for defects.
(3-phase motors only) **Motor starter overloads are burned or have tripped**	Check for voltage on the line and load side of the starter. Check the amp draw and make sure the heater is sized correctly.	Replace any burned heaters or reset. Inspect the starter for other damage. If the heater trips again, check the supply voltage. Ensure that heaters are sized correctly and the trip setting is appropriately adjusted.
(3-phase motors only) **Starter does not energize**	Energize the control circuit and check for voltage at the holding coil.	If there is no voltage, check the control circuit fuses. If there is voltage, check the holding coil for weak connections. Ensure that the holding coil is designed to operate with the available control voltage. Replace the coil if defects are found.
Defective controls	Check all safety and pressure switches for defects. Inspect the contacts in control devices.	Replace worn or defective parts or controls.
Motor or cable is defective	Turn off the power and disconnect the motor leads from the control box. Measure the lead-to-lead resistance with an ohmmeter (set to R x 1). Measure the lead-to-ground values with an ohmmeter (set to R x 100K).	If an open or grounded winding is found, remove the motor from the well and recheck the measurements with the lead separated from the motor. Repair or replace the motor or cable.
(1-phase motors only) **Defective capacitor**	Turn off the power and discharge the capacitor by shorting the leads together. Check it with an analog ohmmeter (set to R x 100K).	When the meter is connected to the capacitor, the needle should jump toward 0 (zero) ohms and slowly drift back to infinity (∞). Replace capacitor if it is defective.
Defective pressure switch or the tubing to it is plugged.	Watch the pressure guages as the pressure switch operates. Remove the tubing and blow through it.	Replace as neccessary.
The pump is mechanically bound or stuck	Turn off the power and manually rotate the pump shaft. Also check the motor shaft rotation, the shaft height, and the motor's amp draw (to see if it indicates a locked rotor).	If the pump shaft doesn't rotate, remove the pump and examine it. If necessary, dismantle it and check the impellers and seal for obstruction. Check for motor corrosion.

Pump Does Not Produce Enough Flow (GPM)

Possible Cause	Check This By . . .	Correct This By . . .
(3-phase motors only) **Shaft is turning in the wrong direction.**	Check to make sure the electrical connections in the control panel and correct.	Correct the wiring. For single phase motors, check the wiring diagram on the motor. For three phase motors, simply switch any two power leads.
Pump is operating at the wrong speed (too slow)	Check for low voltage and phase imbalance	Replace defective parts or contact power company, as applicable.
Check valve is stuck (or installed backwards)	Remove the check valve.	Re-install or replace.
Parts or fittings in the pump are worn **or** **Impellers or inlet Strainer is clogged**	Install a pressure gauge near the discharge port, start the pump, and gradually close the discharge valve. Read the pressure at shutoff. (Do not allow the pump to operate for an extended period at shutoff).	Convert the PSI you read on the gauge to Feet of Head by: **PSI x 2.31 ft/PSI = _____ ft. / Specific Gravity** Add to this number the number of feet (vertically) from the guage down to the water's pumping level. Refer to the pump curve for the model you are working with to determine the shutoff head to should expect for that model. If that head is close to the figure you came up with (above), the pump is probably OK. If not, remove the pump and inspect impellers, chambers, etc.
The water level in the well may be too low to supply the flow desired **or** **Collapsed well**	Check the drawdown in the well while the pump is operating.	If the pumping water level (including drawdown) is not **AT LEAST 3 FEET** above the pump's inlet strainer, either: 1. Lower the pump further down the well. 2. Throttle back the discharge valve to decrease the flow, thereby reducing drawdown.
Broken shaft or coupling	Pull pump and inspect	Replace as necessary.
There are leaks in the fittings or piping	Pull the pump out of the well.	The suction pipe, valves, and fittings must be made tight. Repair any leaks and retighten all loose fittings.

Troubleshooting

Fuses Blow or Heaters Trip

Possible Cause	Check This By . . .	Correct This By . . .
Improper voltage	Check the voltage at the control box or panel.	If the voltage varies by more than 10% (+ or -), contact the power company.
	If the incoming voltage is OK, check the wire size and the distance between the pump motor and the pump control panel.	Rewire with correct guage. Undersized wire and a great distance between the control panel and the pump motor increases resistance and decreases the voltage by the time it reaches the pump motor.
The starter overloads are set too low.	Cycle the pump and measure the amperage.	Increase the heater size or adjust the trip setting. Do not, however, exceed the recommended rating.
(3-phase motors only) **The three-phase current is imbalanced.**	Check the current draw on each lead to the motor.	The current draw on each lead must be *within 5% of eachother (+ or -). If they are* not, check the wiring.
The wiring or connections are faulty.	Check to make sure the wiring is correct and there are no loose terminals.	Tighten any loose terminals and replace any damaged wire.
(1-phase motors only) **Capacitor is defective**	Turn off the power and discharge the capacitor. Check the capacitor with an ohmmeter (set at R x 100K). See page 15 for instructions.	When the meter is connected to the capacitor, the needle should jump towards 0 (zero) ohms and then slowly drift back to infinity (∞). Replace the capacitor if it is defective.
Fuse, heater, or starter are the wrong size	Check the fuses and heaters against the motor manufacturer's specification charts.	Replace as necessary.
The control box location is too hot	Touch the box with your bare hand during the *hottest part of the day* -- you should be able to keep your hand on it without burning.	Shade, ventilate, or move the control box so its environment does not exceed 120°F.
(1-phase motors only) **Wrong control box**	Check requirements for the motor against the control box specificatons.	Replace as necessary.
Defective pressure switch	Watch guages as pressure switch operates	Replace as necessary.
The motor is shorted or grounded.	Turn off the power and disconnect the wiring. Measure the lead-to-lead resistance with an ohmmeter (set to R x 1). Measure the lead-to-ground resistance with an ohmmeter (set to R x 100K) or a megaohmmeter. Compare these measurements to the rated values for your motor.	If you find an open or grounded winding, remove the motor and recheck the leads. If OK, check the leads for continuity and for bad splice.
Poor motor cooling	Find the internal diameter of the well casing (or sleeve, if used). For proper cooling, the flow of water **must not be less than the GPM shown across the bottom scale on page ___.**	Throttle up the pump flow (GPM) so proper *cooling is possible.* or Pull the pump out of the well and add a sleeve with a smaller internal diameter .

Pump Cycles Too Often

Possible Cause	Check This By . . .	Correct This By . . .
The pressure switch is defective or is not properly adjusted.	Check the pressure setting on the switch. Check the voltage across closed contacts.	Readjust the pressure switch or replace it if defective.
The tank is too small	Check the *tank size and amount of air in the* tank. The tank volume should be approximately 10 gallons for each Gallon-Per-Minute of pump capacity. At the pump cut-in pressure, the tank should be about 2/3 filled with air.	*Replace the tank with one that is the correct* size.
There is insufficient air charging of the tank or piping is leaking.	Pump air into the tank or diaphragm chamber. Check the diaphragm for leaks. Check the tank and piping for leaks with soapy water. Check the air-to-water ratio in the tank.	Repair as necessary.
Plugged snifter valve or bleed orifice (causing pressure tank to be waterlogged)	Examine them for dirt or erosion.	Repair or replace as neccessary.
Leak in the pressure tank or piping.	Apply soapy water to pipes and tank, then watch for bubbles, indicating leaks.	Repair or replace as necessary.
The level control is defective or is not properly set.	Check the setting and operation of the level control.	Readjust the level control setting (according to the manufacturer's instructions) or replace it if defective.
Pump is oversized for the application. It is outpumping the yield of the well and pumping itself dry.	Check the yield of the well (determined by the well-test) against the pump's performance curve.	Reduce the flow by throttling back the valve. or Change the pump.

LIMITED WARRANTY

Products manufactured by GRUNDFOS are warranted to the original user only to be free of defects in material and workmanship for a period of 18 months from date of installation, but not more than 24 months from date of manufacture. GRUNDFOS' liability under this warranty shall be limited to repairing or replacing at GRUNDFOS' option, without charge, F.O.B. GRUNDFOS factory or authorized service station, any product of GRUNDFOS manufacture. GRUNDFOS will not be liable for any costs of removal, installation, transportation, or any other charges which may arise in connection with a warranty claim. Products which are sold but not manufactured by GRUNDFOS are subject to the warranty provided by the manufacturer of said products and not by GRUNDFOS' warranty. GRUNDFOS will not be liable for damage or wear to products caused by abnormal operating conditions, accident, abuse, misuse, unauthorized alteration or repair, or if the product was not installed in accordance with GRUNDFOS printed installation and operating instructions.

To obtain service under this warranty, the defective product must be returned to the distributor or dealer of GRUNDFOS products from which it was purchased together with proof of purchase and installation date, failure date, and supporting installation data. Unless otherwise provided, the distributor or dealer will contact GRUNDFOS or an authorized service station for instructions. Any defective product to be returned to GRUNDFOS or a service station must be sent freight prepaid; documentation supporting the warranty claim and/or a Return Material Authorization must be included if so instructed.

MANUFACTURER WILL NOT BE LIABLE FOR ANY INCIDENTAL OR CONSEQUENTIAL DAMAGES, LOSSES, OR EXPENSES ARISING FROM INSTALLATION, USE, OR ANY OTHER CAUSES. THERE ARE NO EXPRESS OR IMPLIED WARRANTIES, INCLUDING MERCHANTABILITY OR FITNESS FOR A PARTICULAR PURPOSE, WHICH EXTEND BEYOND THOSE WARRANTIES DESCRIBED OR REFERRED TO ABOVE.

Some jurisdictions do not allow the exclusion or limitation of incidental or consequential damages and some jurisdictions do not allow limitations on how long implied warranties may last. Therefore, the above limitations or exclusions may not apply to you. This warranty gives you specific legal rights and you may also have other rights which vary from jurisdiction to jurisdiction.

GRUNDFOS®

"Leaders in Pump Technology"

Grundfos Pumps Corporation • 2555 Clovis Ave. • Clovis, CA 93612
Regional Centers: Allentown, PA • Atlanta, GA • Chicago, IL • Seattle, WA • Dallas, TX
Phone: (800) 333-1366 • **Fax:** (800) 333-1363
Canada: Mississauga, Ontario • **Mexico:** Apodaca, N.L.

L-SP-TL-048	Rev. 4/94
PRINTED IN USA	

PRIMARY BRANCH CIRCUIT PROTECTION BY OTHERS

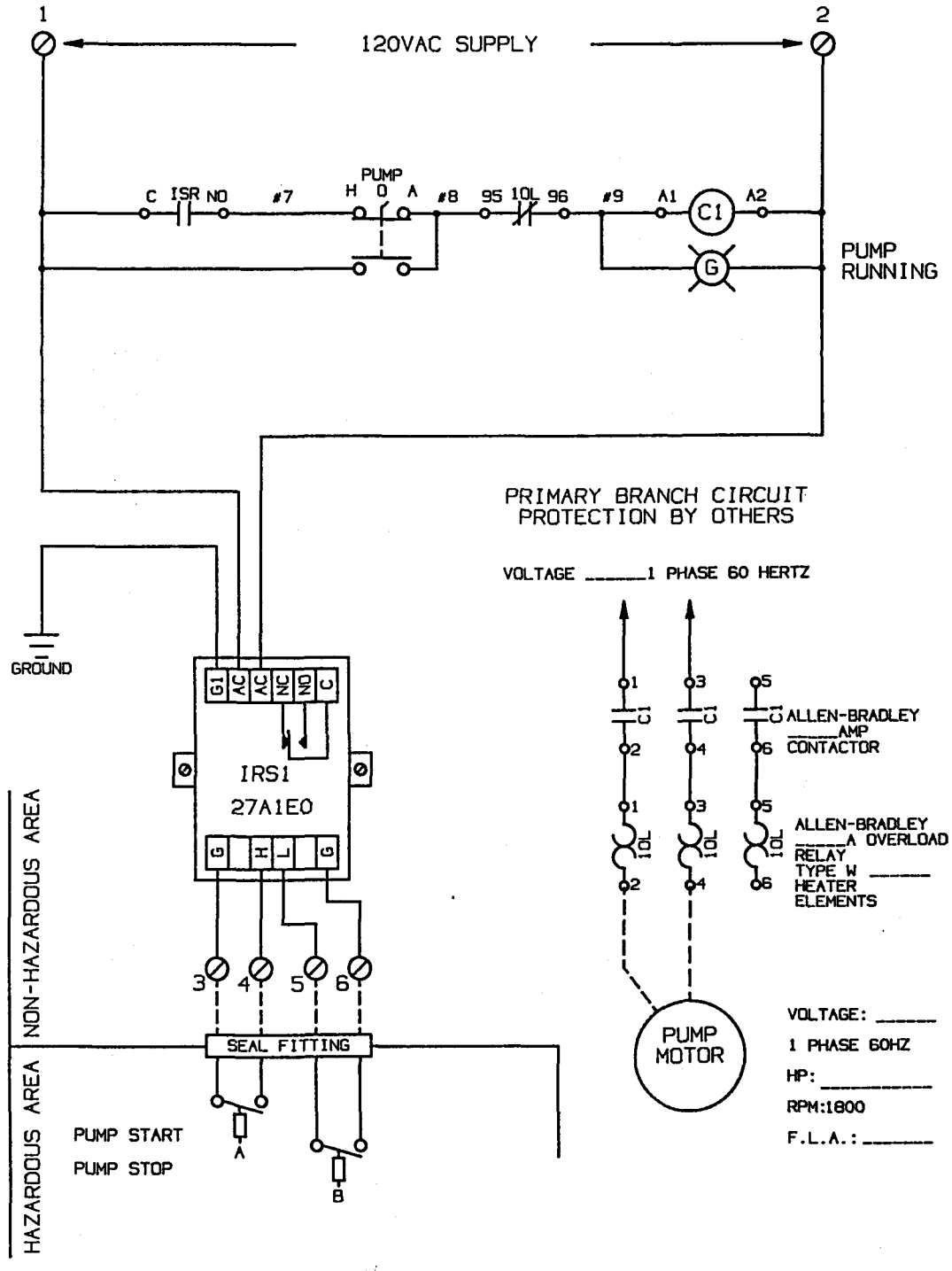

WARRICK CONTROLS

DATE: 6-27-95	DRWN BY: WCL
SHEET NO: 1 OF 1	CHKD BY:

Warrick Controls, Inc.
4237 Normandy Court (Zip 48073)
P.O. Box 460
Royal Oak, Michigan 48068-0460
313/545-2512—Telex 23-0454

TITLE: MODEL SB3458-XE4

GROUNDWATER REMEDIATION
PUMP CONTROL PANEL

DRWG NO: SB3458

WARRICK CONTROLS

INSTALLATION & OPERATING INSTRUCTIONS

INSTALLATION INSTRUCTION

IMPORTANT: Completely read and thoroughly understand these instructions before proceeding to install and wire the control.

Mount controlbox vertically on wall or other solid structure. The maximum distance between the controlbox and the location of the electrodes is determined by the sensitivity of the Series 27 control(s). This information is supplied on Form 270B.

INTRINSICALLY SAFE GENERAL INFORMATION

IMPORTANT: BEFORE PROCEEDING TO INSTALL AND WIRE THE ALARM PANEL, READ AND THOROUGHLY UNDERSTAND THESE INSTRUCTIONS.

The following information should be used by experienced personnel as a guide to the installation of intrinsically safe alarm panels. Selection or installation of equipment should always be accompanied by competent technical assistance. We encourage you to contact Warrick or its local representative if further information is required.

The control panel contains a U.L. Listed interface relay with Intrinsically Safe Sensing Circuits. The interface relay is Associated Apparatus listed under Process Control equipment, with Intrinsically Safe Outputs for Interface into Division 1 Hazardous Locations. The circuits are to be connected to any simple non-energy generating or storing device such as a pushbutton, limit, float switch, or any Warrick electrode and fitting assembly.

The control panel is preassembled and ready to wire. Locate the panel in a non-hazardous area where an explosive environment does not exist.

Cabinet and mounting plate to be connected to a good earth ground. For additional guidance on "Hazardous Location Installation," and "Intrinsically Safe Devices," consult ANSI/ISA standard RP 12-6 or NEC ARTICLES 500 through 516.

CAUTION:

Intrinsically safe wiring must be kept separate from

non-intrinsically safe wiring. Special procedures have been followed during the manufacturing of these control panels to insure proper spacings. Some models incorporate isolated barriers or covers for this purpose.

A separate rigid metallic conduit should be used to enclose the conductors of the intrinsically safe circuit. Multiple runs of intrinsically safe wiring may be run in the same conduit only where at least 0.25mm (0.010 inch) thick insulation, suitable for the maximum temperature, is used on each conductor. Refer to ANSI/ISA RP 12.6 for details. Conduit or cable, containing the intrinsically safe wiring, shall be sealed in accordance with the National Electrical Code, NFPA No. 70, (approved sealing fitting), where the conduit enters or exits the hazardous locations.

INDUCTANCE AND CAPACITANCE: For intrinsically safe wiring use 16 AWG or 14 AWG TYPE THHN/THHW/THWN or MTW. By using these types of wire in conjunction with a limitation on distance, you will not exceed the maximum capacitance or inductance for field wiring.

Use the following chart as a guide for maximum total length of all the intrinsically safe wiring (of each conductor), excluding any ground wiring.

WARRICK INTERFACE RELAY

MODEL NUMBER	HAZARDOUS LOCATIONS	MAXIMUM CABLE LENGTH SHALL NOT EXCEED
47 Series	Class I, Group C & D; Class II, Group E, F & G	16,000
27 Series	Class I, Group A,B,C & D Class II, Group E, F & G	4000
67 Series	Class I, Groups C, D Class II, Groups E, F, G Class III, Division I	16,000

NOTE:

Refer to Series 27, 47 and 67 data information for distance recommendations so not to exceed the maximum capacitance or inductance limitations of the control.

WARRICK CONTROLS

INSTALLATION & OPERATING INSTRUCTIONS

Circles with diagonals (0) on wiring diagram represent terminals provided for external connections.

Connect terminal pair 1-2 to A.C. supply line of electrical characteristics indicated on data label.

Connect terminals 3 and 4 to the normally open pump start float switch.

Connect terminals 5 and 6 to the normally open pump stop float switch.

Connect 230 V.A.C. supply power to the supply side of contactor(s) C1.

Connect pump motor leads to the load side of the thermal overload relay as shown.

NOTE: All wiring shall be in accordance with the National Electrical Code.

Primary branch circuit protection provided by others. Please refer to Articles 240 and 430 of the National Electric Code before installing.

OPERATING INSTRUCTIONS

A Hand-Off-Automatic selector switch is provided for the motor so that it can be operated by hand, automatically or turned off. This switch will normally be in the AUTO position and operation will then be as follows.

The pump will be started when the level rises to electrode A and will continue in operation until the level is reduced below electrode B.

A green PUMP RUNNING light is provided on the door of the controlbox and will be energized when the pump(s) is operating.

APPENDIX B
SYSTEM TANKS

- EQUALIZATION/MIX TANK
- pH ADJUSTMENT TANK
- CLEAN WATER/BACKWASH TANK
- NaOH (CAUSTIC) SOLUTION TANK

Manufacturer: Nalge Company
A subsidiary of Sybron Corporation
75 Panorama Creek Drive
Box 20365
Rochester, NY 14602-0365
(716) 586-8800 Fax: (716) 586-8431

Supplier: Plastic Piping Systems (all tanks except NaOH Solution Tank)
One Hollywood Court
South Plainfield, NJ 07080
(908) 753-0708
Contact: Art Turquoi

Equalization/Mix Tank	Nalge Model 51305-4090 XLPE (4,000 gallon) S/N: 3A950059
pH Adjustment Tank	Nalge Model 51305-1100 XLPE (1,000 gallon) S/N: 3A950058
Clean Water/Backwash Tank	Nalge Model 51305-4090 XLPE (4,000 gallon) S/N: 3A950060
NaOH Solution Tank	Nalge Model 11300-0055 XLPE (55 gallon)

NALGENE®
Industrial Products
Volume 20

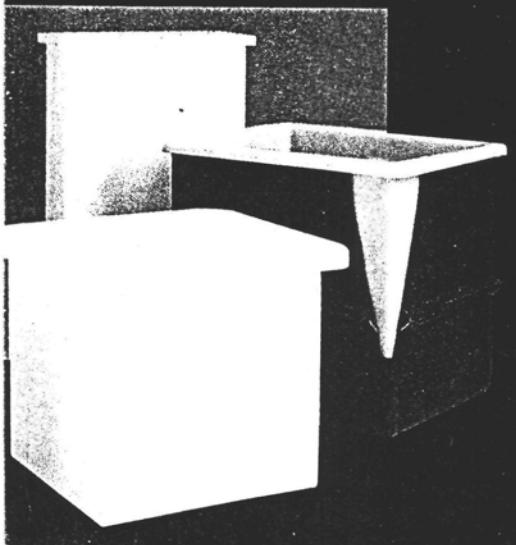

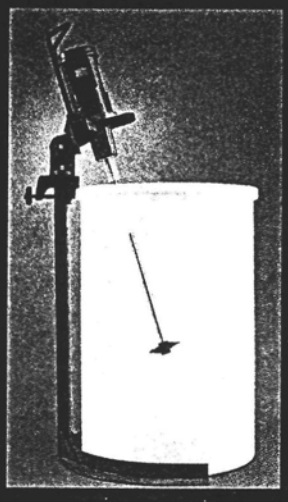

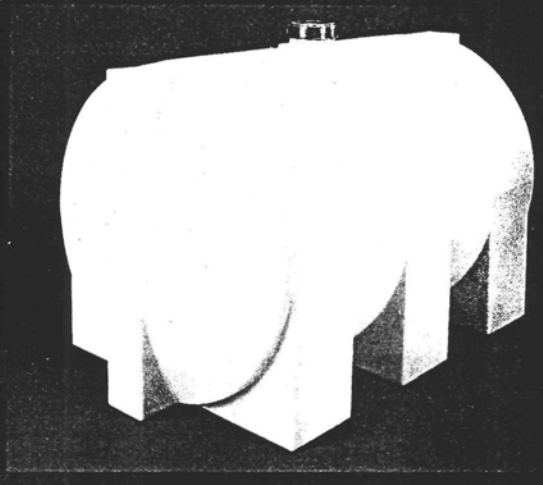

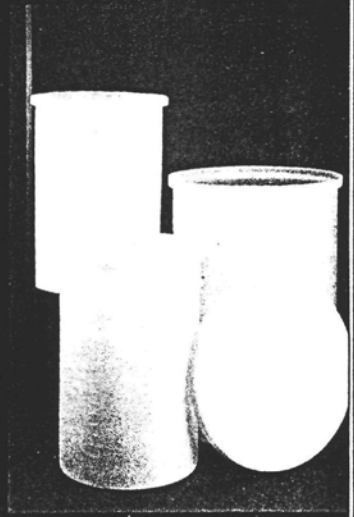

Flat-Bottom Tanks

Tank Size	Tank Type	NALGENE Tanks — Material, Cat. No. – Size Code				LIGHTNIN Mixers Cat. No. – Size Code	Tank Stands with Mixer Supports Cat. No. – Size Code		Package Shipping Weight, lb. Approx.+
							Floor	Elevated	
30 gallons		**HDPE**	**PP**	**XLPE**					
	N	11100-0030	11200-0030	11300-0030		62100-0030	20010-0030	19010-0030	200
	B	18100-0030		18300-0030	**PVDF**		35 in. high	57 in. high	
	F	19100-0030	19200-0030	19300-0030	19500-0030				
55 gallons		**HDPE**	**PP**	**XLPE**					
	N	11100-0055	11200-0055	11300-0055		62100-0055	20010-0055	19010-0055	215
	B	18100-0055		18300-0055	**PVDF**		38 in. high	61 in. high	
	F	19100-0055	19200-0055	19300-0055	19500-0055				
80 gallons		**HDPE**	**PP**	**XLPE**					
	N	11100-0080	11200-0080	11300-0080		62100-0080	20010-0080	19010-0080	270
	B	18100-0080		18300-0080			48 in. high	73 in. high	
	F	19100-0080	19200-0080	19300-0080					
100 gallons		**HDPE**	**PP**	**XLPE**					
	N	11100-0100	11200-0100	11300-0100		62100-0100	20010-0100	19010-0100	285
	B	18100-0100		18300-0100	**PVDF**		44 in. high	68 in. high	
	F	19100-0100	19200-0100	19300-0100	19500-0100				
150 gallons		**HDPE**	**PP**	**XLPE**					
	N	11100-0150	11200-0150	11300-0150		62100-0150	20010-0150	19010-0150	350
	B	18100-0150		18300-0150	**PVDF**		49 in. high	73 in. high	
	F	19100-0150	19200-0150	19300-0150	19500-0150				
200 gallons		**HDPE**	**PP**	**XLPE**					
	N	11100-0200	11200-0200	11300-0200		62100-0200	20010-0200	19010-0200	440
	B	18100-0200		18300-0200	**PVDF**		51 in. high	73 in. high	
	F	19100-0200	19200-0200	19300-0200	19500-0200				
275 gallons		**HDPE**	**PP**	**XLPE**					
	N	11100-0275	11200-0275	11300-0275		62100-0275	20010-0275	19010-0275	535
	B	18100-0275		18300-0275	**PVDF**		49 in. high	73 in. high	
	F	19100-0275	19200-0275	19300-0275	19500-0275				
360 gallons		**HDPE**	**PP**	**XLPE**					
	N	11100-0360	11200-0360	11300-0360		62100-0360	20010-0360	19010-0360	580
	B	18100-0360		18300-0360			49 in. high	73 in. high	
	F	19100-0360	19200-0360	19300-0360					
500 gallons		**HDPE**							
	N	11100-0500				62100-0500	20010-0500	19010-0500	750
	F	19100-0500					62 in. high	84 in. high	
1000 gallons		**HDPE**							
	N	11100-1000				62100-1000	20010-1000	19010-1000	1,000
	F	19100-1000					77 in. high	100 in. high	

Tank Type
N = Natural (usually white or off-white)
B = Black
F = FRP (fiberglass-reinforced polyester) casing

+ With elevated tank stands and FRP casings

A Complete Line of Rotationally-Molded Bulk Storage Tanks

Decide For Yourself

It's easy to choose your NALGENE bulk storage tank. Just determine your capacity and read the charts on these pages. Technical information on available resins is noted below:

Resin Selection Guide

PROPERTIES	HIGH-DENSITY POLYETHYLENE (HDPE)	CROSS-LINKED HIGH-DENSITY POLYETHYLENE (XLPE)
Chemical Resistance (general)	Very Good	Very Good
Stress-Crack Resistance	Good	Excellent
Maximum Service Temperature	150°F/65°C	150°F/65°C
Brittleness Temperature	–94°F/–70°C	–180°F/–118°C
Impact Resistance	Good	Excellent
Abrasion Resistance	Good	Good
Rigidity	Good	Good
Cleanability	Very Good	Very Good
Translucence	*Liquid level observable*	*Liquid level observable*
Weldability (hot gas)	Weldable	Not Weldable
Complies with FDA	Yes	No
Color	White (natural)	Gray (pigmented)
ADVANTAGES	• Rigid • Hard, smooth finish • Easy-to-clean • Very good chemical resistance • Good temperature resistance • Less expensive than stainless steel or fiberglass • UV stabilized for sunlight protection	• Excellent impact resistance • High stress-crack resistance • Suitable for many corrosives not handled by FRP • UV stabilized for outdoor service
APPLICATIONS	• Storage of caustics • Storage of organic and inorganic acids • Water treatment • Dispensing of laboratory and photographic chemicals • Storage of wide range of corrosives, including sulfuric, hydrochloric and hydrofluoric acids, sodium hydroxide	• Storage of organic and inorganic chemicals and compounds • Metal finishing/ plating • Chemical processing • Storage of boiler treatment chemicals • Water and sewage treatment • Bulk chemical storage
NOT GENERALLY RECOMMENDED FOR	Strong oxidizing agents, aromatic hydrocarbons, halogenated-aliphatic hydrocarbons, liquified petroleum gas, solvents	Strong oxidizing agents, aromatic hydrocarbons, halogenated-aliphatic hydrocarbons, liquified petroleum gas, solvents

NALGENE bulk storage tanks, designed for a variety of indoor and outdoor uses, are available in many sizes and shapes. They're rotational-molded of rugged cross-linked high-density polyethylene (XLPE) and high-density polyethylene (HDPE), which is a linear polyethylene. Rotomolding reduces molded-in stresses, making the tanks durable and resistant to stress-cracking chemicals. This process also assures seamless, lightweight, uniform construction.

High-Performance Resins

XLPE tanks are ideal for storing a wide range of corrosives, inorganic and organic chemicals and compounds, and boiler treatment chemicals. HDPE tanks can safely store foodstuffs (resin complies with U.S. Food and Drug Administration Regulation 177.1520) see footnote number 3 on page 4, as well as many inorganic acids. Technical information on these materials is outlined in the Resin Selection Guide on this page.

Plastics Are Tough To Beat

NALGENE bulk storage tanks offer distinct advantages over steel/ fiberglass products. They are lighter in weight, more corrosion-resistant, translucent and easier to maintain than steel tanks. Seamless construction eliminates leakage problems often associated with fabricated tanks. Unlike fiberglass, plastic tanks do not wick. And, NALGENE tanks are usually less expensive than either stainless steel or fiberglass.

There's definitely a NALGENE bulk storage tank to suit your requirements. Choose from vertical, conical-bottom or horizontal configurations. They come with a variety of accessories, too, including insulation, heat tracing, fill lines, and other items. A simple call to your Authorized NALGENE Industrial Products Distributor is all it takes to order one of these tanks — known industry-wide for quality and reliability.

Sizes up to 12,000 Gallons!

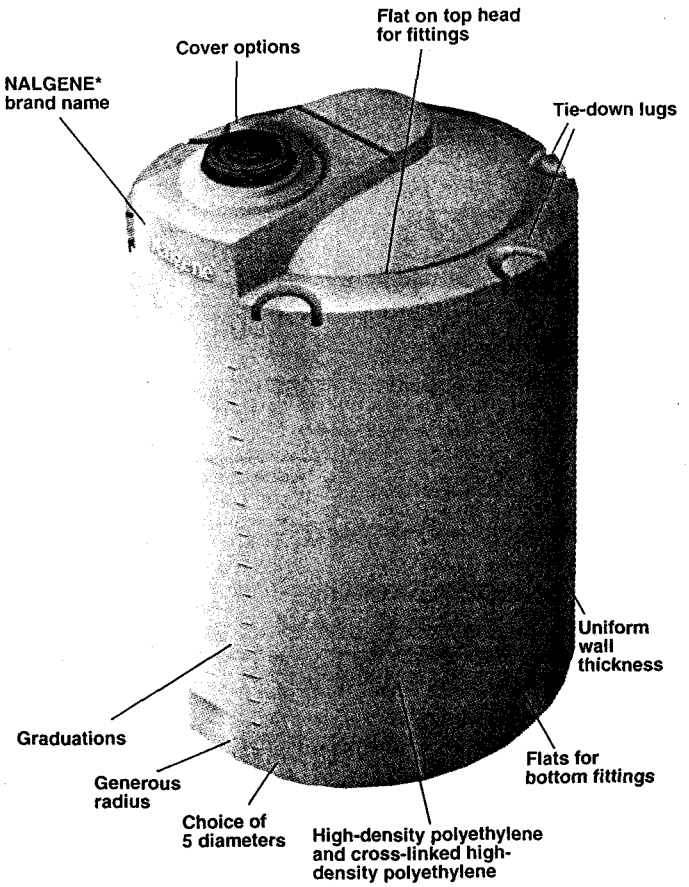

Vertical Bulk Storage Tank

Vertical Bulk Storage Tanks

NALGENE vertical bulk storage tanks have a number of unique features. The entire line offers:

- Sizes ranging from 550 gallons to 12,000 gallons
- Seamless construction
- Leakproof design
- Mounting flats on the bottom portion of the tank (up to 4000 gal.)
- Choice of two resins (XLPE, HDPE) and two specific gravities (1.5, 1.9)
- Tie-down lugs
- Translucent*; observable liquid level; tanks up to 12,000 gallons are gray (XLPE) or natural (HDPE)
- Circular top head flat for fittings (excluding 550-gallon size)
- Molded-in graduations up to 4000 gallons. (90-in. diameter excluded)
- Several cover options
- ASTM D 1998-91†

NALGENE vertical storage tanks have flat bottoms for easy installation. Smaller tanks (550-1550 gallons) incorporate narrow-diameter design for space-saving bulk storage. This makes them economical for in-plant use.

Tanks are engineered for tough applications. They provide excellent low-temperature impact resistance and are UV stabilized for outdoor use.

Fittings and other accessories can be added as specified to meet your requirements. Options are found on pages 40-41.

On request, Nalge Company will hydrostatically test your bulk storage tanks†. Contact NALGENE Industrial Products Group for details.

NOTE: All dimensions noted on tank drawings are nominal. Vertical tanks do not include fittings, which must be ordered separately. Covers are included.

Vertical Tanks

Tank Size, gal.	Graduations, gal.	D × H, in.	Specific Gravity	Material: XLPE Cat. No. & Size Code	Material: HDPE Cat. No. & Size Code	Wall Thickness,** in.	Approx. Weight, lb.	Standard Cover, in.
550	50	48 × 84	1.5	–	–	–	–	–
			1.9	51309-0550	51109-0550	.25	140	16
850	100	64 × 74	1.5	51305-0850	51105-0850	.25	150	16
			1.9	51309-0850	51109-0850	.28	170	16
1100	100	64 × 93	1.5	51305-1100	51105-1100	.31	190	16
			1.9	51309-1100	51109-1100	.37	220	16
1550	100	64 × 127	1.5	51305-1550	51105-1550	.34	280	16
			1.9	51309-1550	51109-1550	.41	415	16
2000	250	96 × 83	1.5	51305-2000	51105-2000	.31	320	16
			1.9	51309-2000	51109-2000	.44	445	16
2500	250	96 × 99	1.5	51305-2500	51105-2500	.38	430	16
			1.9	51309-2500	51109-2500	.50	625	16
3000	250	96 × 116	1.5	51305-3000	51105-3000	.44	620	21
			1.9	51309-3000	51109-3000	.56	800	21
3000 90-in. dia.	–	90 × 126	1.5	51305-3090	51105-3090	.44	620	21
			1.9	51309-3090	51109-3090	.56	800	21
4000	250	96 × 145	1.5	51305-4000	51105-4000	.56	850	21
			1.9	51309-4000	51109-4000	.81	1100	21
4000 90-in. dia.	–	90 × 162	1.5	51305-4090	51105-4090	.56	850	21
			1.9	51309-4090	51109-4090	.81	1100	21
5500	–	120 × 134	1.5	51305-5500	51105-5500	.58	1100	21
			1.9	51309-5500	51109-5500	.73	1600	21
6500	–	120 × 155	1.5	51305-6500	51105-6500	.69	1400	21
			1.9	51309-6500	51109-6500	.87	1900	21
8000	–	143 × 134	1.5	51305-8000	51105-8000	.70	1900	21
			1.9	51309-8000	51109-8000	.89	2300	21
10,000	–	143 × 165	1.5	51305-9100	51105-9100	.89	2500	21
			1.9	51309-9100	51109-9100	1.13	3000	21
12,000	–	143 × 196	1.5	51305-9120	51105-9120	1.07	3300	21
			1.9	51309-9120	51109-9120	1.36	4000	21

**Wall thickness based on bottom side wall.
*Storage tanks with up to 3/4-in. wall thickness are translucent; however, observation of liquid level depends on favorable light conditions, liquid color and a clean tank wall.
†Available at additional cost.

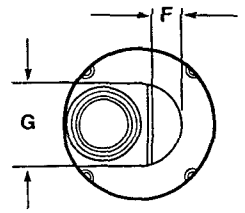

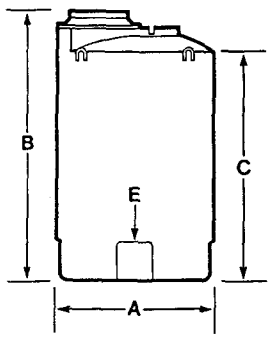

550-GAL. TANK

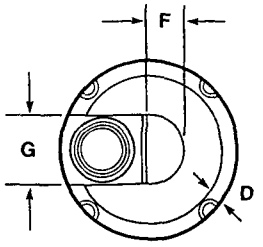

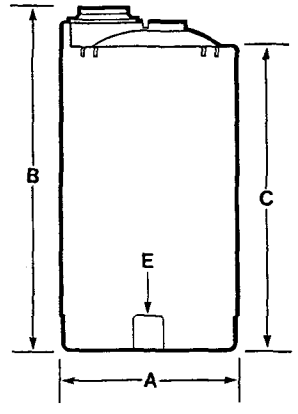

850-, 1100-, 1550-GAL. TANKS

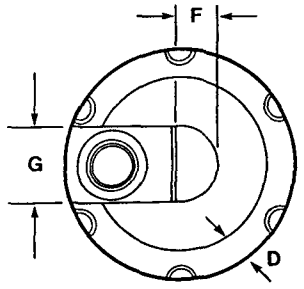

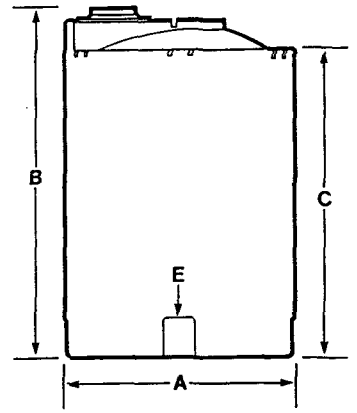

2000-, 2500-, 3000-, 4000-GAL. TANKS

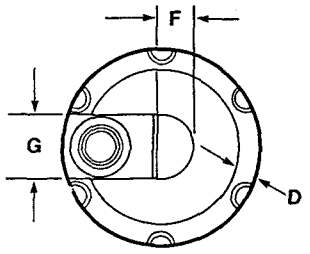

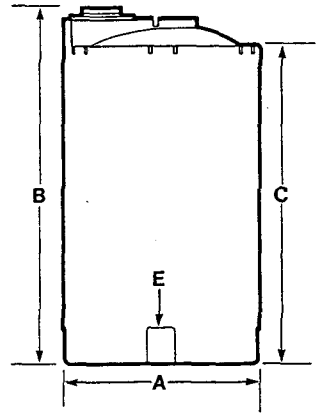

3000-, 4000-GAL. TANKS (90-in. DIA.)

Vertical Tanks

Tank Size, gal.	A, in.	B, in.	C, in.	D, in.	E, in.	F, in.	G, in.
550	48	84	72	–	11 × 12	9	26
850	64	74	62	6	11 × 12	16	26
1100	64	93	79	6	11 × 12	16	26
1550	64	127	113	6	11 × 12	16	26
2000	96	83	66	12	13 × 16	18	32
2500	96	99	82	12	13 × 16	18	32
3000	96	116	99	12	13 × 16	18	32
3000 90-in dia.	90	126	109	9	7 × 9*	15	30
4000	96	145	128	12	13 × 16	18	32
4000 90-in. dia.	90	162	145	9	7 × 9*	15	30
5500	120	134	123	14	–	30½	32
6500	120	155	144	14	–	30½	32
8000	143	134	120	14	–	42	32
10,000	143	165	151	14	–	42	32
12,000	143	196	182	14	–	42	32

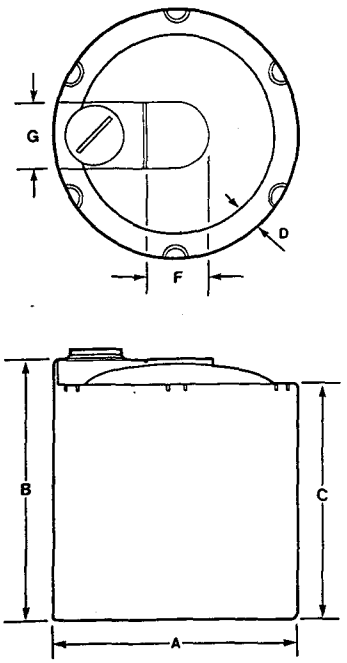

5500-, 6500-, 8000-, 10,000-, 12,000-GAL. TANKS

Note: When factory-installed fittings are required, you must provide us with the catalog number for each fitting, catalog number for each tank, and drawings (freehand is acceptable) of each tank with its fitting(s).

* The minimum elevation for bottom outlet fittings is 9 inches. (6 inches for 90-in. diameter tanks) up to 3-in. diameter fitting.

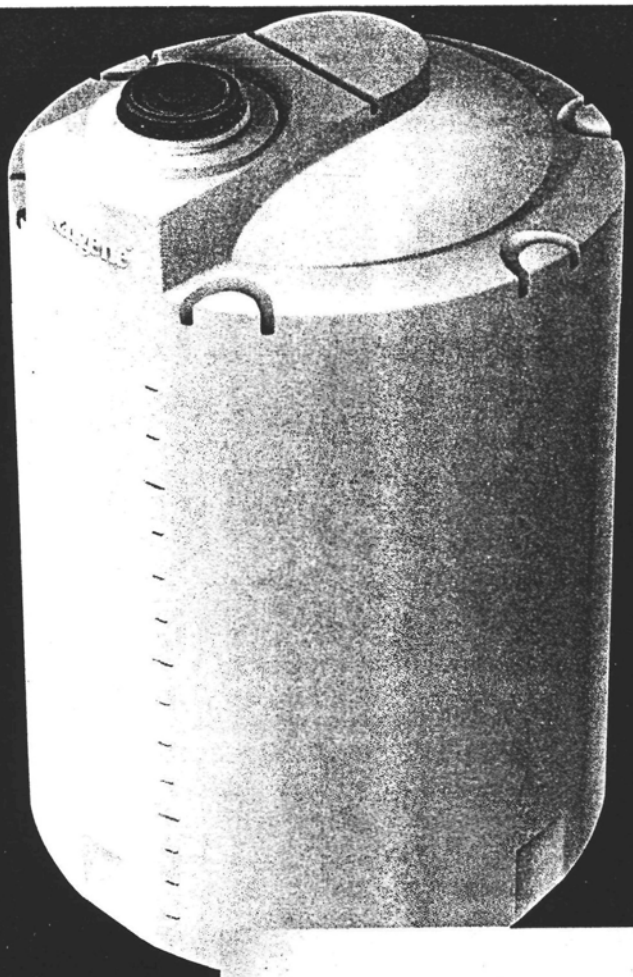

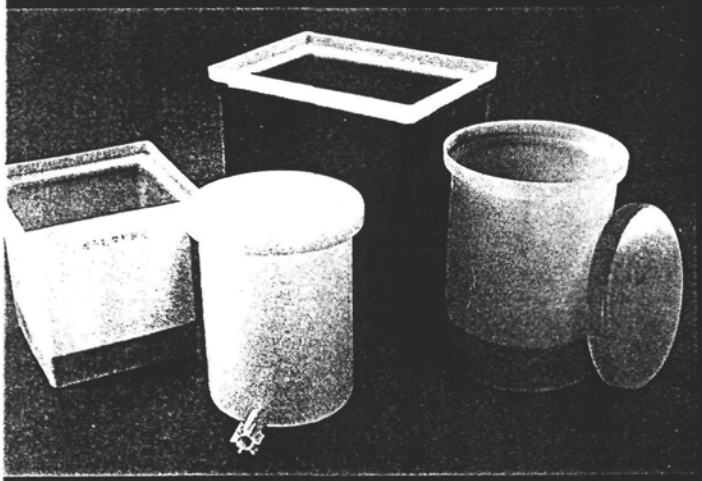

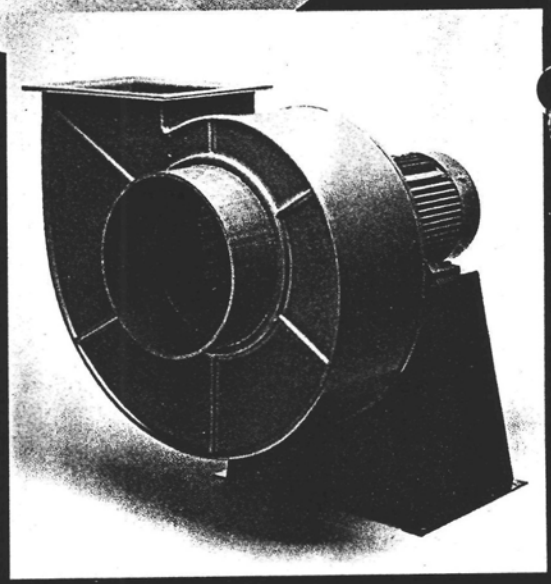

Nalge Company

NALGENE® Brand Products

NALGENE Industrial Products Group
Nalge Company
A Subsidiary of Sybron International
P.O. Box 20365
Rochester, NY 14602-0365
Phone: (716) 586-8800
Fax: (716) 586-3294

© Nalge Company, 1994 30008

35M-WP

Printed on Recycled Paper

Printed in U.S.A.

DISTRIBUTOR ASSEMBLY INSTRUCTIONS

STRUCTURAL

NORTH AMERICA An ESSEF Company

CHARDON, OHIO 44024 (USA)

DST 5814 REV. A 2/94 SHEET 1 OF 2

USED ON DST 5683, 5684, 5686

BOTTOM MOUNT HUB AND LATERAL SYSTEM

FLANGED COMPOSITE TANKS
(30", 36", 42", 48") DIAMETER TANKS

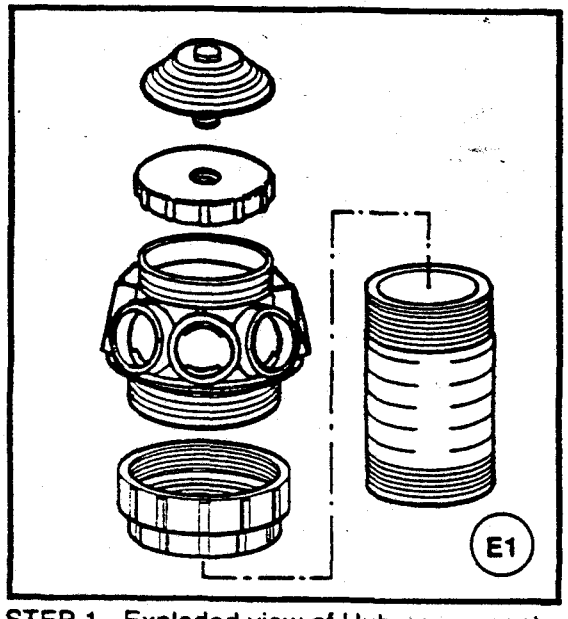

STEP 1 - Exploded view of Hub components.

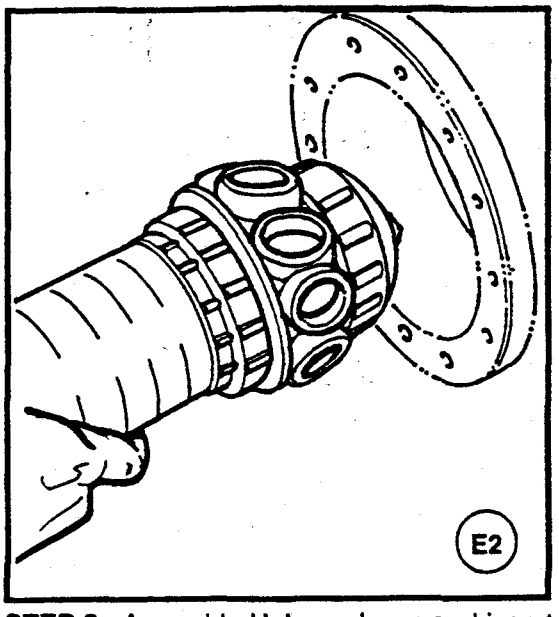

STEP 2 - Assemble Hub as shown and insert assembly into flange opening.

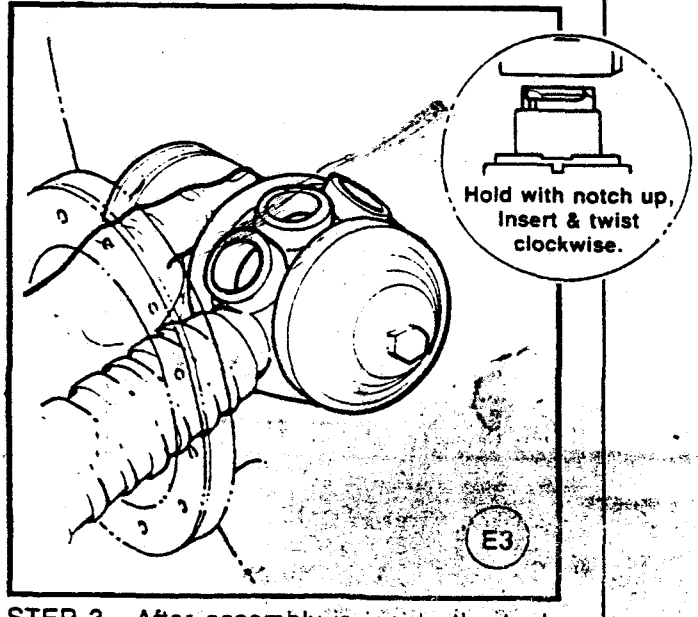

STEP 3 - After assembly is inside the tank, rotate the assembly 90°. Hold the Hub assembly with one hand as shown and assemble laterals by inserting and twisting clockwise. Note: Be sure lateral ends are tight.

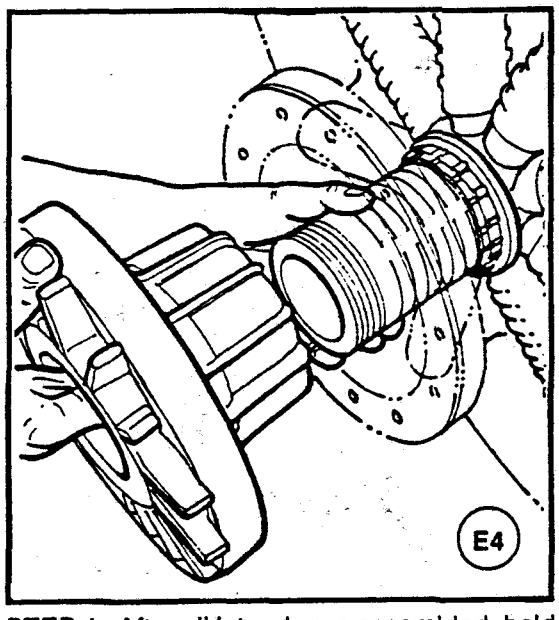

STEP 4 - After all laterals are assembled, hold the assembly as shown and thread on the flanged adaptor. Note: Be sure "O" ring is attached and seated properly to flanged adaptor.

Note: Optional means of assembly, see steps E7, E8, E9.

© STRUCTURAL NORTH AMERICA, CHARDON, OHIO 44024

INSTRUCTIONS CONTINUED ON BACK

DISTRIBUTOR ASSEMBLY INSTRUCTIONS

STRUCTURAL

NORTH AMERICA An ESSEF Company

CHARDON, OHIO 44024 (USA)

DST 5814 REV. A 2/94

USED ON DST 5683, 5684, 5686

BOTTOM MOUNT HUB AND LATERAL SYSTEM

FLANGED COMPOSITE TANKS
(30", 36", 42", 48") DIAMETER TANKS

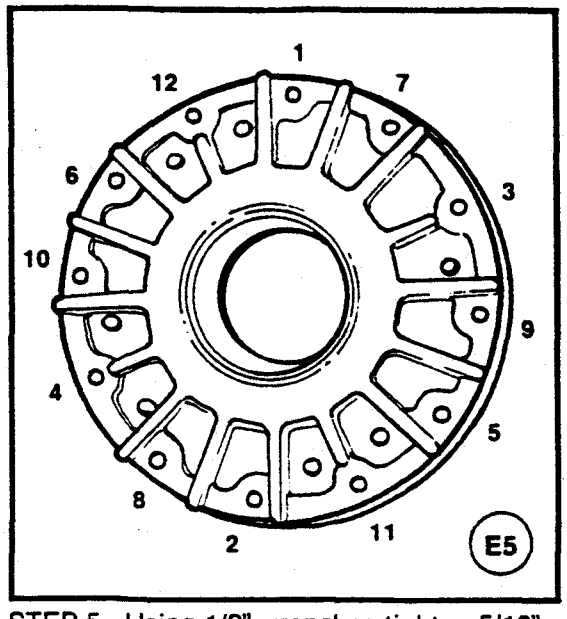

STEP 5 - Using 1/2" wrenches tighten 5/16" x 2 1/2" long bolts alternately as shown, until the flanges are flush with each other, and seal is attained.

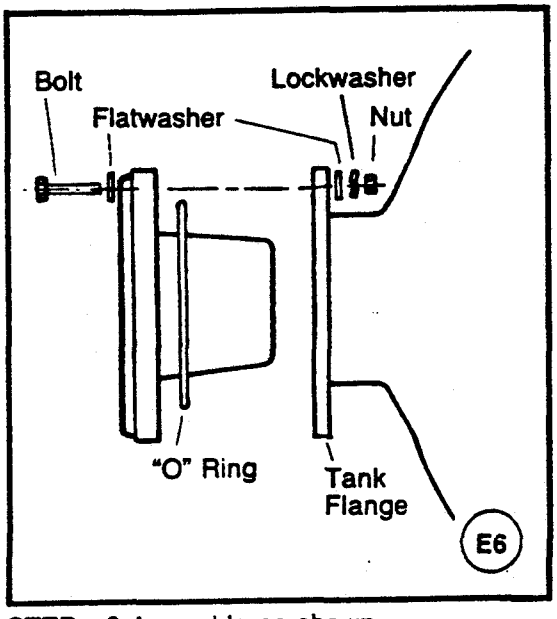

STEP - 6 Assemble as shown.

© STRUCTURAL NORTH AMERICA, CHARDON, OHIO 44024

STRUCTURAL

NORTH AMERICA An ESSEF Company
CHARDON, OHIO 44024 (USA)

USED ON DST 5683, 5684, 5686

BOTTOM MOUNT HUB AND LATERAL SYSTEM

FLANGED COMPOSITE TANKS
(30", 36", 42", 48") DIAMETER TANKS

OPTIONAL ASSEMBLY METHOD

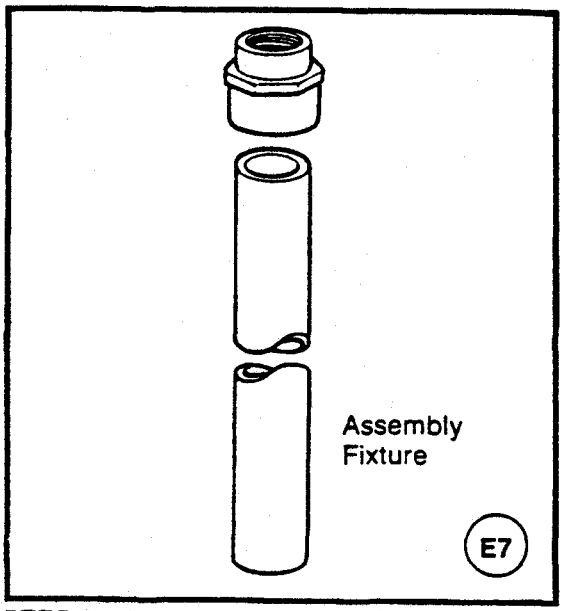

STEP 7 - Use length of 3" PVC pipe (longer than tank length), slip on 3" PVC female adaptor (do not bond). This fixture is used for ease of assembly. (Furnished by customer)

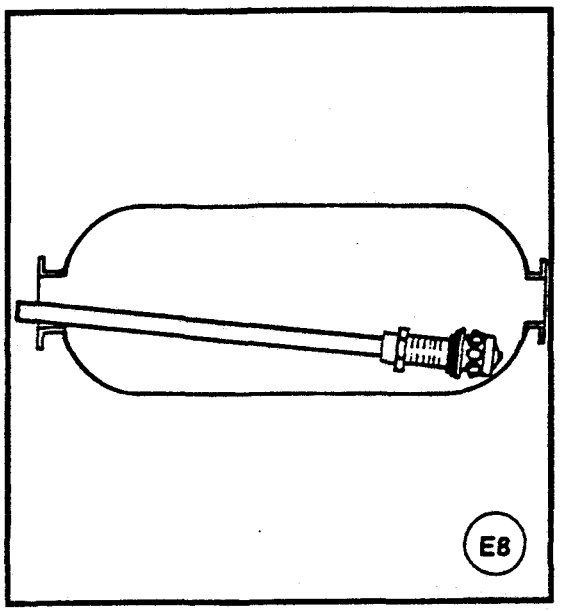

STEP 8 - The Hub Assembly is threaded on to the female adaptor of the assembly fixture and inserted into top opening. Allow to rest on side wall of tank. (As shown)

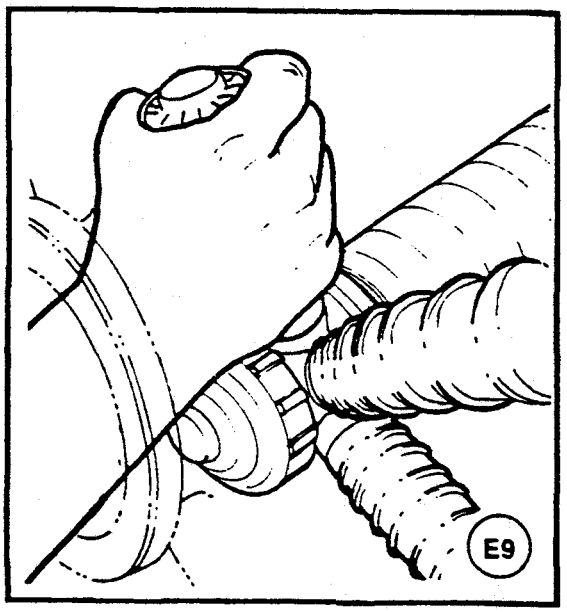

STEP 9 - Install laterals one at a time through bottom opening. Insert laterals into Hub and lock into place by turning clockwise.
Note: Be sure lateral ends are tight.

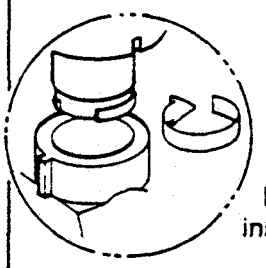

Hold with notch up, insert & twist clockwise.

© STRUCTURAL NORTH AMERICA, CHARDON, OHIO 44024

APPENDIX C
SUBMERSIBLE SYSTEM PUMPS

- Equalization Tank Recirculation Pump (ABS Model CD10W; S/N 0153)
- Equalization Tank Transfer Pump (Multiquip Model ST1503-UL; S/N 262539)
- pH Adjustment Tank Recirculation Pump (ABS Model CD10W; S/N _____)
- pH Adjustment Tank Transfer Pump (Goulds Model 3885; S/N _____)
- Backwash Pump (ABS Model JUMBO-31WHH; S/N 15074)
- Discharge Pump (Multiquip Model ST1503-UL; S/N 262580)
- Sump Pump (Multiquip Model ST2005-UL; S/N_____)

Manufacturers:

ABS Pumps, Inc.
140 Pond View Drive
Meriden, CT 06450
(203) 238-2700

Multiquip, Inc.
18910 Wilmington Ave.
Carson, CA 90746
(213) 537-3700

Mailing Address:
Multiquip, Inc.
P.O. Box 6254
Carson, CA 90746

Goulds Pumps, Inc.
Seneca Falls, NY 13148

Suppliers:

Godwin Pumps of America (ABS, Multiquip)
One Flood Gate Road
Bridgeport, NJ 08014
(609) 467-3636
Contact: Jack Farrell

ABS
A company in the Cardo Group

Installation Operation & Maintenance Manual

Portable Submersible Pumps

CD Range

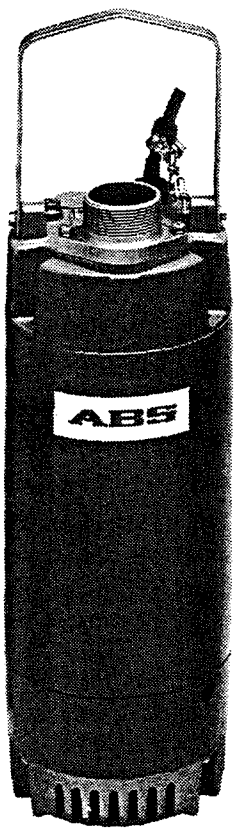

ABS
A company in the Cardo Group

ABS Pumps Inc.
140 Pond View Drive
Meriden, CT 06450-7156

Warranty

ABS — PORTABLE PUMPS
STANDARD AND EXPLOSION PROOF

ABS Pumps Inc. warrants its Portable Dewatering series pumps and equipment to be free from defects in workmanship and materials for a period of six (6) months from the date of installation or twelve (12) months from the date of shipment, whichever occurs first, to the original end customer.

The Company's sole obligation under this warranty shall be to make repairs and replace parts when necessary on products that have been returned to it or an authorized service center and found to be defective by the Company. The warranty covers standard portable pumping equipment when used for pumping non-corrosive liquids containing limited quantities of abrasive particles in compliance with ABS technical manuals and Company representations.

MSHA (Mine Safety and Health Administration) approved JUMBO MEX equipment includes pump, control and cable. MSHA approved models are specific in their usage intent for mining applications. FM (Factory Mutual) approved AFPT-EX equipment includes pump and cable and are used in Class I, Division I, group C & D locations. Company approved components must be used in servicing equipment. All explosion proof models must be serviced at a service center authorized by ABS Pumps Inc.

ABS Pumps Inc. shall not be liable for any special, indirect or consequential damages of any kind. Major components not manufactured by the Company are covered by the original manufacturer's warranty in lieu of this warranty. The Company will not be held responsible for travel expenses, rented equipment, outside contractor's fees, or unauthorized repair shop expenses. The Company neither assumes nor authorizes any person or other company to assume for it, any other obligation in connection with the sale of its equipment. Any enlargement or modification of this warranty by a representative or other sales agent is their exclusive responsibility. Transportation charges shall be borne by the Buyer. Returns must have prior written authorization from the Company.

This warranty shall extend only to the original owner and shall not apply to any products that have been repaired or altered without the Company's consent or have been subject to misuse, accident or neglect, or have been used for uses other than the Company's intended purpose.

The electrical system schematics may be required to support any warranty claim. Pump returns must include the cable and controls. ABS will not be responsible for repairs unless the cable and controls were originally supplied by the Company or were suitable for the purpose and equal to ABS equipment. Use of spare parts other than those manufactured or supplied by ABS will void this warranty.

NO OTHER WARRANTIES, EXPRESS OR IMPLIED, INCLUDING IMPLIED WARRANTIES OF MERCHANTABILITY AND FITNESS FOR A PARTICULAR PURPOSE, WILL APPLY.

SECTION I

INTRODUCTION

ABS CD submersible pumps are specifically designed for dewatering applications in construction, mining, industrial municipal and utility markets.

DESIGN

The hydraulic and motor sections form a closed flood-proof, water tight encapsulated unit. Maximum submergence is 65 feet.

Motor: Three-phase and single-phase are available in a range of voltages from 115V to 600V. The motors are 2-Pole (3450 RPM) at 60 Hz. All motors are direct on-line starting.

Insulation Class B = 130°C; motor cooling by means of a cooling jacket and temperature monitors.

The rotor shaft is supported by permanently lubricated maintenance free ball bearings.

Sealing: The sealing between the motor and hydraulic section utilizes a special lip seal and a mechanical seal (silicon carbide), independent of direction of rotation, resistant to temperature shock, excellent dry-running characteristics.

Hydraulics: The cast iron impeller is made from a material which is highly resistant to wear and particularly suitable for abrasive fluids. The discharge outlet is 1 1/2", 2", or 3" male NPT nozzle.

Refer to Page 7 for materials of construction and pump specifications.

SECTION II

MAINTENANCE INSTRUCTIONS

ABS pumps are reliable products of proven quality, each being subjected to careful final inspection.

Regular inspection and maintenance are recommended to ensure long service life.

OIL CHANGE

The oil chamber has been filled at the factory with the correct quantity of lubricating oil. This should be changed annually.

The oil change is carried out as follows:
Place the pump in such a position that one of the two oil plug screws (1800) points downwards. Un screw both oil plug screws and allow oil to drain out. Rinse out oil chamber with cleansing oil. Fit the lower oil screw and refill with the correct quantity of new oil. Ensure the oil plug screws are properly fitted and reassemble with proper O-Ring sealing washer (Refer to Figure 2-1, Page 4).

If water is found in the oil (milky emulsion) the mechanical seal unit must be checked and replaced if necessary.

Oil Quantity: .55 Qts 10W High Detergent Oil.

CLEANING

We recommend cleaning the inlet strainer at regular intervals if foliage or high proportions of fibrous material are present in the pumping medium.

To prevent mixed clay, sand and silt, or similar materials from solidifying when the pump is shut off, the pump should be cleaned by pumping clear water. For prolonged periods of non use the pump should be stored dry and protected from freezing.

MALFUNCTIONS

Should a malfunction occur review the trouble shooting guide for possible causes and remedies. If the cause cannot be determined consult the ABS service department.

This applies particularly in the event of repeated cut out by the overcurrent trip in the control unit or by the shutting down of the motor by the bimetallic thermal overloads (MTP).

SECTION II

CHANGING HYDRAULIC PARTS

After prolonged usage, the hydraulic parts can become worn and must be replaced.

Disconnect from power supply. Unscrew hex head screws (1200), remove bottom screen (0250) and bottom plate (0230). Unscrew impeller nut (2530). Remove impeller (0160). Replace worn parts as required. Reassemble in the reverse manner.

Hydraulic Cross Section

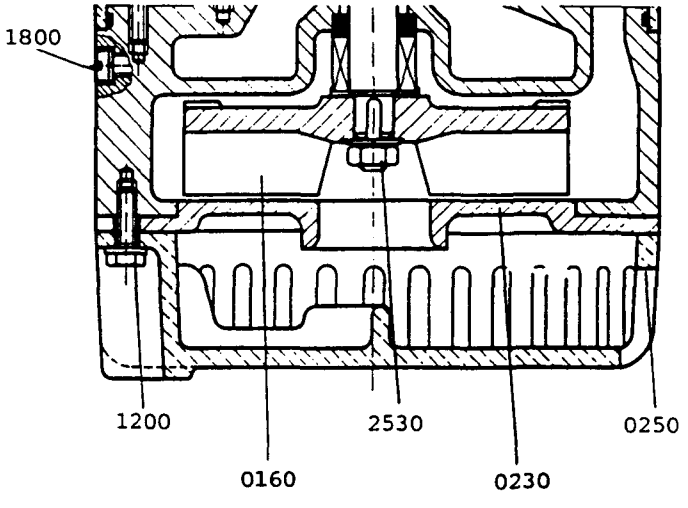

Figure 2-1

SECTION III

ELECTRICAL CONNECTION

Prior to starting the pump a qualified electrician should inspect the system to ensure one of the required electrical protective measures has been provided. Grounding, protective multiple earthing, fault current circuit breaker, etc. must comply with the regulations of the local power supply authority and function properly. The voltage specified on the pump rating plate must be the same as the supply voltage.

Cor ection of the supply and pump cables to the terr nals of the control unit should be carried out by n electrician in accordance with the markings. The system must be protected by a time delay fuse with adequate rating (corresponding to the power rating of the pump).

The electrical control devices should be protected from the weather and should be installed in a flood proof area.

Refer to Figures 3-1 through 3-4, Page 5 for pump wiring diagrams.

CHECKING DIRECTION OF ROTATION

The direction of rotation must be checked on initial start up. Incorrect direction of rotation will reduce pump performance and damage the pump.

To determine the direction of rotation the pump should be raised and started briefly before installation. The direction of rotations (rotor rotation) is correct if: When looking down on the top cover of the pump housing the pump starts with a quick jerk in the direction of the start reaction arrow.

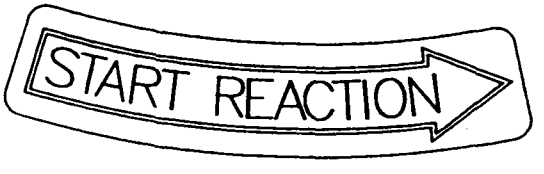

If several pumps are connected to a single control unit, each pump must be checked individually.

Reversing Direction of Rotation

If the direction of rotation is incorrect it can be reversed by changing over two of the phase conductors in three phase motors or interchanging any leads in single phase motors.

-SINGLE PHASE
-6 LEADS
-START CAPACITOR
-CENTRIFUGAL SWITCH

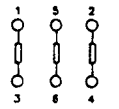

WINDING SCHEME

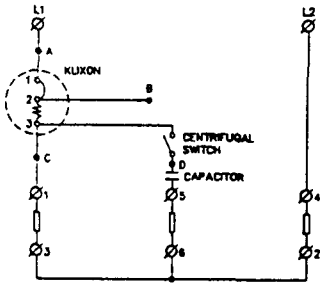

230 VOLT CONNECTION

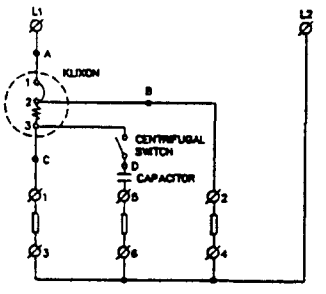

115 VOLT CONNECTION

Figure 3-1 Wiring Diagram-CD5W

-SINGLE PHASE
-6 LEADS
-START CAPACITOR
-ELECTRONIC SWITCH
(4 POINTS)

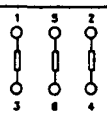

WINDING SCHEME

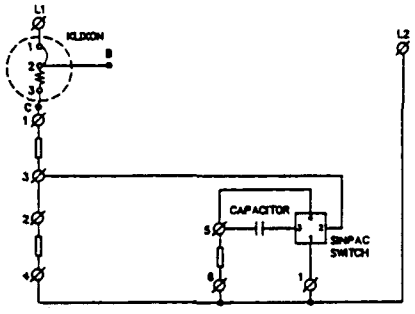

NOTE: THE ELECTRONIC SWITCH MUST BE 115V.

230 VOLT CONNECTION

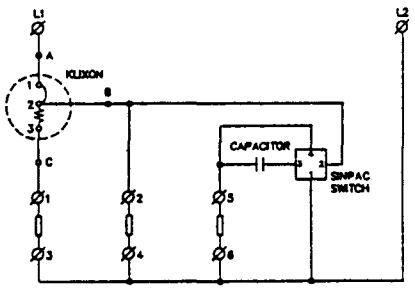

NOTE: THE ELECTRONIC SWITCH MUST BE 115V.

115 VOLT CONNECTION

Figure 3-2 Wiring Diagram-CD10W

-SINGLE PHASE
-6 LEADS
-START CAPACITOR
-RUN CAPACITOR
-ELECTRONIC SWITCH

WINDING SCHEME

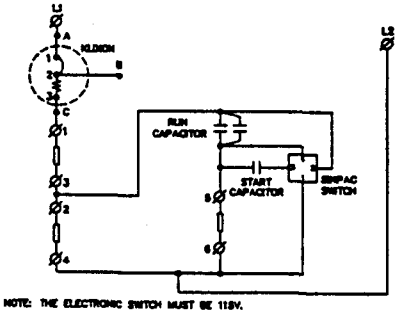

NOTE: THE ELECTRONIC SWITCH MUST BE 115V.

230 VOLT CONNECTION

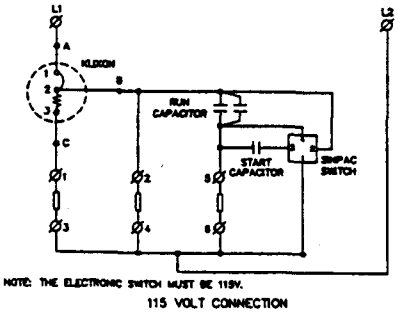

NOTE: THE ELECTRONIC SWITCH MUST BE 115V.

115 VOLT CONNECTION

Figure 3-3 Wiring Diagram-CD20W

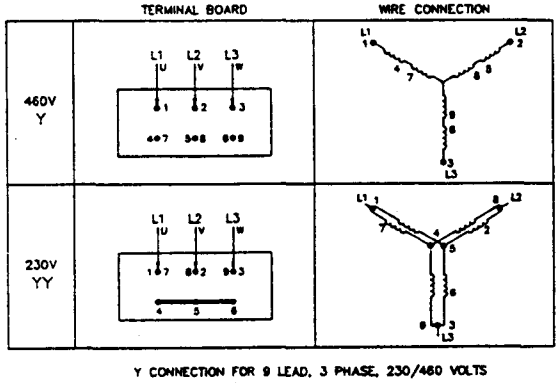

Y CONNECTION FOR 9 LEAD, 3 PHASE, 230/460 VOLTS

Figure 3-4 Wiring Diagram-CD10D, 20D

CD FEATURES

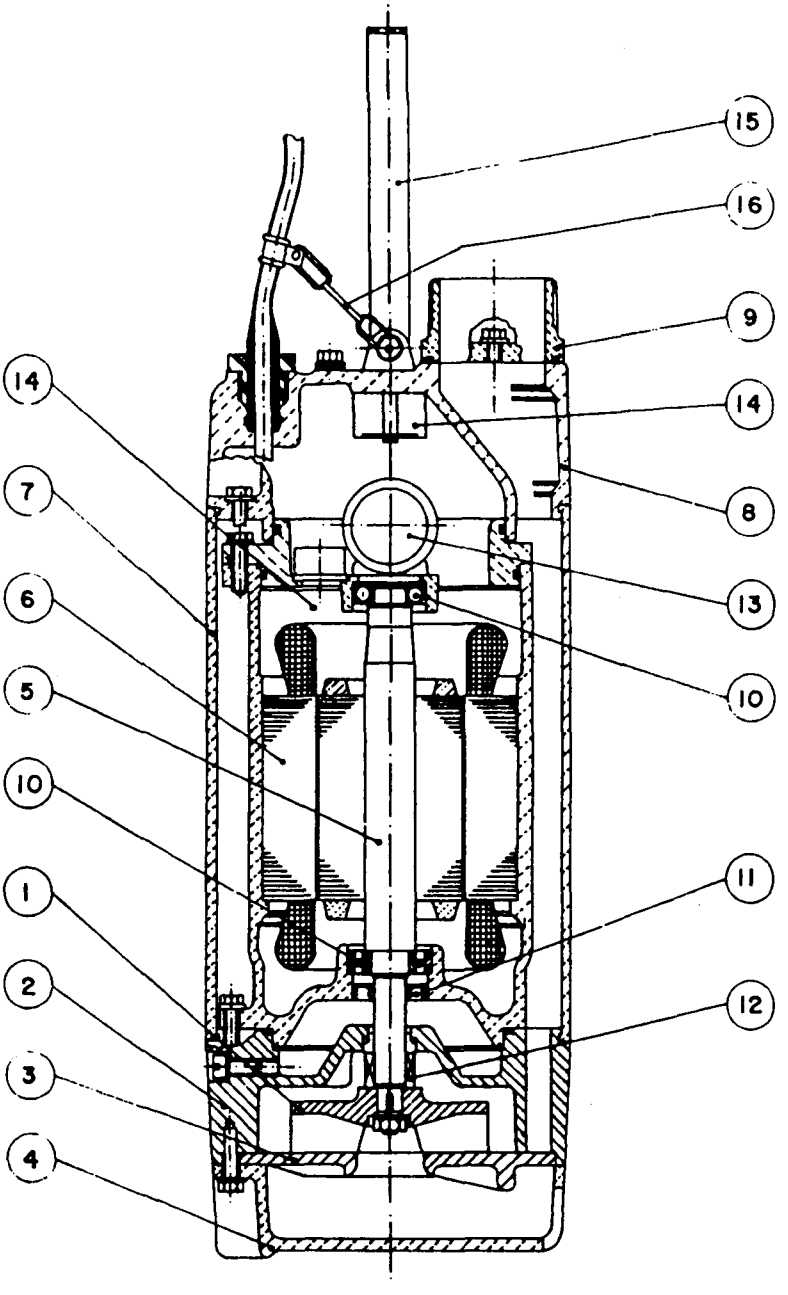

1 - Impeller
2 - Volute
3 - Bottom Plate
4 - Bottom Screen
5 - Rotor with Shaft Assembly
6 - Stator
7 - Cooling Jacket
8 - Upper Lid
9 - Discharge Fitting
10 - Ball Bearings
11 - Lip Seal
12 - Mechanical Seal
13 - Capacitor (W)
14 - Solid State Switch (W)
Centrifugal Switch (5W)
15 - Movable Handle
16 - Tension Protective Chain

(W)- For Single Phase ONLY

CONSULT FACTORY FOR SPECIFIC PARTS LIST AND CUTAWAY DRAWING

Pump Specifications

CD	CD5W	CD10W	CD20W	CD10D	CD20D
Horsepower	0.5	1.0	2.0	1.0	2.0
Horsepower Input	0.7	1.17	2.07	1.15	2.1
RPM	3450	3450	3450	3450	3450
Phase/Hertz	1/60	1/60	1/60	3/60	3/60
Voltage	115/230	115/230	115/230	230/460/600	230/460/600
Full Load Amps	9.6/4.8	13.4/6.7	19/9.5	3.5/1.75/1.3	10/5/3.8
Locked Rotor Amps	50/25	72/36	100/50	24/11.8/9.1	60/30/23
Nema Letter Code	N	K	G	L	N
Voltage Tolerance	±10°C	±10°C	±10°C	±10°C	±10°C
Service Factor	1.1	1.1	1.1	1.1	1.1
Height (Max.)	18	18	18	18	21 3/4
Width (Max.)	7	7	7	7	7
Max. Stator Temp.	130°C	130°C	130°C	130°C	130°C
Weight (lbs)	40	49	55	38	44
Discharge Size--Inches	1½,2,3	1½,2,3	1½,2,3	1½,2,3	1½,2,3
Solid Size Capacity–Inches	¼	¼	¼	¼	¼
Starting Capacitor	(1) 1281902 216-259 MFD	(1) 1281909 340-408 MFD	(1) 1281909 304-408 MFD	–	–
Run Capacitor	–	–	(2) 1281907 40 MFD 250V	–	–

Materials of Construction

Motor Housing	Cast Aluminum Alloy (Silumin)
Oil Chamber/Diffuser	Cast Iron
Cooling Jacket	Aluminum
Impeller	Cast Iron
Bottom Plate	Cast Iron
Motor Shaft	420 Stainless Steel
O-Ring	Buna N
Mechanical Seal, Lower	Silicon Carbide
Lip Seal	Buna N
External Hardware	304 Stainless Steel

TROUBLESHOOTING CHART

SYMPTOM	POSSIBLE CAUSE	ACTION
PUMP WILL NOT START	A. Power supply failure	A. Check power supply Check electrical system for loose connections Check operating voltage
	B. Burned out fuse or tripped circuit breaker	B. Check circuit protectors Reset circuit breakers
	C. Damaged power cable	C. Check external cable for damage - repair
	D. Jammed impeller	D. Inspect and remove jamming object
	E. Failed capacitor	E. Replace capacitor
	F. Foreign matter build-up	F. Clean bottomscreen/bottom plate
REPEATED TRIPPING	A. Circuit protection underrated	A. Check rating and replace with proper size
	B. Current unbalance	B. Check current draw
	C. Pump connected to incorrect voltage	C. Check operating voltage
	D. Wet or damaged wiring	D. Inspect external cable, replace if worn or damaged
	E. Loose connection in pump or control panel	E. Check and tighten connections
	F. Obstruction in pump	F. Remove obstruction
	G. Incorrect motor rotation	G. Check rotation
	H. Foreign matter build-up	H. Clean bottom screen/bottom plate
PUMP WON'T SHUT OFF	A. Control panel/float failure	A. Check control panel/float
LOW FLOW	A. Incorrect pump rotation	A. Check rotation
	B. Low liquid level	B. Check liquid level
	C. Obstruction in pump or piping	C. Remove obstruction
	D. Partially closed valve(s)	D. Check and adjust valve
	E. Excessive bottom plate clearance	E. Replace bottom plate and impeller
WATER IN OIL CHAMBER	A. Loose or damaged oil plug or sealing washer	A. Check oil plug and sealing washer/O-ring
	B. Mechanical seal failure	B. Replace mechanical seal
WATER/OIL INSIDE MOTOR CASING	A. Damaged upper lip seal or mechanical seal	A. Replace seal
	B. Damaged O-ring between oil chamber and motor housing	B. Replace O-ring
	C. Damaged cable	C. Replace cable

FOR PRODUCT SERVICE: DIRECT FAX - (203) 235-1080

ABS PUMPS INC. 140 Pond View Drive Meriden, CT 06450-7156 (203) 238-2700 fax: (203) 238-0738

OPERATION MANUAL

Electric Submersible Pumps

ST-1503UL *

ST-2005UL *

ST-2010UL

G047-G92.2

HANDLING OPERATION

(Preparation before operation)

"WARNING-Risk of electric shock-This pump is supplied with a grounding conductor and grounding-type attachment plug. To reduce the risk of electric shock, be certain that it is connected only to a properly grounded, grounding-type receptacles."

1. Connect, before operation, firstly cable to power source and check if abnormality and right voltage.

2. Check the rotating direction of pump, this pump's right direction is clock-wise view from top of pump. Checking methode: hange pump by rope or hand, then switch in, when pump removes counter-clock wise by reaction, that is OK.

3. If, under certain working conditions, it becomes necessary to extend the cabtyre cable, employ such a cabtyre cable identical or bigger in diameter as provided with the pump. With extended cable, make sure the right voltage (Using tester or volt-meter at the connection between main cable and the extended cable. Special care should be taken that the cable connection should not be under water always.)

4. Delivery port of pipe or hose must be kept apart from the planned water level of reservoir or equip with check valve. If the said pipe or hose comes below the planned water level, it may lead to counterflow of water due to siphon action when pump stops.

OPERATIONAL INSTRUCTION

1. Be sure to lead the green wire into ground right before you plug cabtyre cable into receptacle.

2. Care should be taken not to apply pump into pond, bath tab and swimming pool strictly when there are people in water.

3. For operation in a bog or sandy soil, place logs, wooden stake or pile in the bottom of pump preventing pump from caving in or sinking deeper. Unless otherwise, pump may absorb a large quantity of sands and may cave in muds and sands with its weight and the pump will be clogged by sands to stop the pump.

4. To remove and to install pump, be sure to use hanging rope or carrying handle always, not to carry the pump by cabtyre cable.
5. Provide 'Screen' separately outside the strainer where there is a large quantity of impurities or rubbish in water.

6. Soon after pumping up water containing a large quantity of sands and other impurities, be sure to run the pump in clean water for some time longer and clean up pump and inside of hose. If you leave pump as it is after stopping pump, without cleaning pump inside, there comes a precipitation of impurities in pump and hose and this may cause a trouble with the working operation to follow.

7. The watertight part of pump shaft, which is the most important center of watertight mechanism, is oil-sealed mechanically and lubrication-oil is enclosed. The life-time of pump, however, varies depending upon working conditions and has no specific limitation. Check lubrication-oil at a regular interval and it ensures long and trouble free life of pump. Oil lubricated should be IDEMITSU DAPHNY mechanic-oil No. 10 or the equivalent.

8. Do not use pump to following liquid:
   Hot water (more than 40°C)
   Acid, alkali, solvent and other chemical solutions

9. In the construction site, be sure to install and provide the Ground Fault Circuit Interruptor wherver it is available.

PARTS LIST

REF. NO.	DESCRIPTION	QTY.	SUBMERSIBLE PUMP MODEL NO.			
			ST-1503UL	ST-2005UL	ST-2010UL	ST-2010B
1	Casing	1	020-1503-001	020-2005-001 (common)		
3	Impeller	1	020-1503-003	020-2005-003	020-2010-003	
4	Impeller nut	1	020-1503-004 (common)			
5	Impeller nut washer	1	020-1503-005 (common)			
6	Impeller key	1	020-1503-006 (common)			
8	Casing packing	1	020-1503UL-008 (common)			
47	Liner (0.2mm)	1	020-1503-047A (common)			
47	Liner (0.3mm)	1	020-1503-047B (common)			
60	Mechanical seal	1	020-1503-060 (common)			
65	Plug	1	020-1503-065 (common)			
81	Oil seal	1	020-1503-081 (common)			
102	Discharge port	1	020-1503A-102	020-2005A-102 (common)		
103	Packing	1	020-1503A-103 (common)			
104	Bolt	2	020-1503A-104 (common)		——	
112	Oil seal for oil chamber	1	020-1503A-112 (common)			
119	Motor	1	020-1503UL-119	020-2005UL-119	020-2010UL-119	020-2010B-119
120	AC cord with cord gland	1	020-1503UL-120 (common)		020-2010UL-120	020-2010B-120
121	Cord clamp	1	020-1503-121 (common)			
122	Hanger metal	1	020-1503-122 (common)			
123	Chain	1	020-1503-123 (common)			
125	Screw	2	020-1503-125 (common)			
127	Carrying handle	1	020-1503A-127 (common)			
129	Frame cover	1	020-1503-129	020-2005A-129 (common)		
130	Packing	1	020-1503UL-130	020-2005UL-130 (common)		
131	Bolt	4	020-1503-131	020-2005A-131	020-2010A-131 (common)	
132	Spring washer	4	020-1503-132 (common)			
146	Strainer	1	020-1503-146 (common)			
147	Bolt	3	020-1503-147 (common)			
160	Sleeve	1	020-1503-160 (common)			
174	Outer pipe	1	020-1503UL-174	020-2005UL-174	020-2010UL-174 (common)	
176	Suc cover	1	020-1503-176	020-2005-176 (common)		
177	Bolt	4	020-1503-177 (common)			
179	Packing	1	020-1503-179	020-2005-179 (common)		
214-1	Packing	1	020-1503UL-214 (common)			
214-2	Packing	1	020-1503-214B (common)			
224	Plug	1	020-1503-224 (common)			
236	S-tip	1	020-1503-236 (common)			
263	Washer	2	020-1503-263 (common)			
265	Bolt	4	020-1503-265 (common)			
266	Washer	4	020-1503-266 (common)			
299	Screw	4	020-1503-299	020-2005-299 (common)		
431	Nut	2	——		020-2010A-431 (common)	
445	Condenser	1	——	020-2005A-445	020-2010A-445	020-2010B-445
446	Auto-cut	1	020-1503UL-446	020-2005UL-446	020-2010UL-446	020-2010B-446
447	Centrifugal switch	1	020-1503A-447		020-2005A-447 (common)	
474	Washer	4	020-1503A-474 (common)			
563	Split pin	2	020-1503-563 (common)			
641	Spring washer	4	020-1503-641 (common)			

Note : When ordering parts, please give model number and serial number of unit.

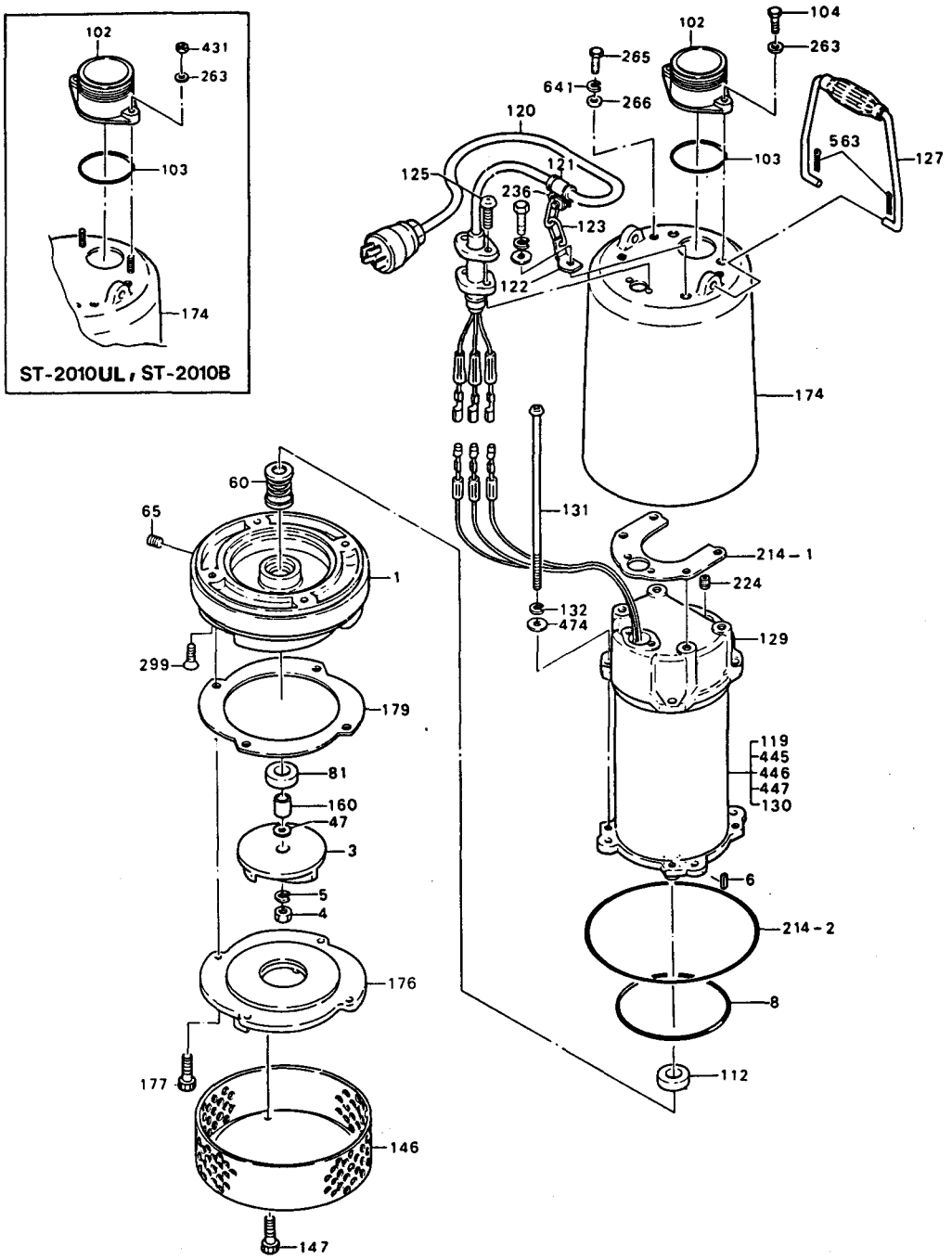
102
431
263
103
174
ST-2010UL, ST-2010B
102
104
263
265
641
266
120
563
127
103
125
121
236
123
122
174
60
65
1
131
214-1
224
132
474
129
299
179
119
445
446
447
130
81
160
47
3
6
5
4
214-2
176
8
177
112
146
147

MAINTENANCE SERVICE

Check the following points with tester at a regular interval.

1. Cable Breakdown Check . . . . . Check an introduction of two pin plug receptacle or between two lines. (Electric Resistance to read 0Ω is passable)
2. Insulation Check . . . . . Check insulation between pole of two pin plug and earth wire or between one line and earth wire. (Electric Resistance more than 5MΩ to read is passable.)

CAUSE AND PHENOMENON OF TROUBLES

The phenomenon of pump caused by electrical or mechanical troubles is as follows:—

Phenomenon of Troubles / Cause of Troubles	Decrease of Water Volume	Increase of Water Volume	Pumping Inopera-tive	Bad Insula-tion	Increase of Electric Current	Stoppage by burnt-pre-vention unit
Actual Head is higher	O		O			
Actual Head is lower		O			O	
When voltage drops	O				O	O
Running counterclockwise	O					O
Clogged strainer by foreign material	O		O			
Clogged impeller by foreign material	O		O		O	
Worn out impeller	O		O			
Casing worn	O		O			
Suction cover worn out	O		O			
Pumping up water containing excessive sands/dirts					O	O
Bearing failure					O	O
Running pump with absence of water for a log time						O
Exposed to the rain for a long time				O		
Worn Seal and Water Leak in the motor				O		
Pump hose clogged by sands	O		O			
Deformed or bent water hose	O		O			
High viscosity of liquid to be pumped up	O		O			O

The phenomenon of pump troubles through the proper functioning of burnt-prevention unit or Auto-Cut and mechanical causes is shown by the above table. Take the pump, therefore, out of water and inspect it to remove the cause of troubles.

MULTIQUIP INC.
18910 Wilmington Avenue
Carson. California 90746
Telephone: (213) 537-3700 Telex: 691574
Mailing Address: P.O. Box 6254, Carson, CA 90749

Installation Operation & Maintenance Manual

Slim Line Portable Dewatering Pump

Jumbo 31 Series

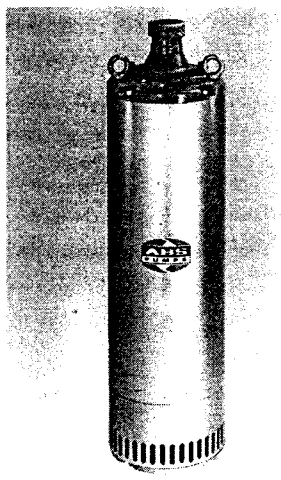

ABS Pumps Inc.
140 Pond View Drive
Meriden, Connecticut 06450
(203) 238-2700

Warranty

ABS — PORTABLE PUMPS
STANDARD AND EXPLOSION PROOF

ABS Pumps Inc. warrants its Portable Dewatering series pumps and equipment to be free from defects in workmanship and materials for a period of six (6) months from the date of installation or twelve (12) months from the date of shipment, whichever occurs first, to the original end customer.

The Company's sole obligation under this warranty shall be to make repairs and replace parts when necessary on products that have been returned to it or an authorized service center and found to be defective by the Company. The warranty covers standard portable pumping equipment when used for pumping non-corrosive liquids containing limited quantities of abrasive particles in compliance with ABS technical manuals and Company representations.

MSHA (Mine Safety and Health Administration) approved JUMBO MEX equipment includes pump, control and cable. MSHA approved models are specific in their usage intent for mining applications. FM (Factory Mutual) approved AFPT-EX equipment includes pump and cable and are used in Class I, Division I, group C & D locations. Company approved components must be used in servicing equipment. All explosion proof models must be serviced at a service center authorized by ABS Pumps Inc.

ABS Pumps Inc. shall not be liable for any special, indirect or consequential damages of any kind. Major components not manufactured by the Company are covered by the original manufacturer's warranty in lieu of this warranty. The Company will not be held responsible for travel expenses, rented equipment, outside contractor's fees, or unauthorized repair shop expenses. The Company neither assumes nor authorizes any person or other company to assume for it, any other obligation in connection with the sale of its equipment. Any enlargement or modification of this warranty by a representative or other sales agent is their exclusive responsibility. Transportation charges shall be borne by the Buyer. Returns must have prior written authorization from the Company.

This warranty shall extend only to the original owner and shall not apply to any products that have been repaired or altered without the Company's consent or have been subject to misuse, accident or neglect, or have been used for uses other than the Company's intended purpose.

The electrical system schematics may be required to support any warranty claim. Pump returns must include the cable and controls. ABS will not be responsible for repairs unless the cable and controls were originally supplied by the Company or were suitable for the purpose and equal to ABS equipment. Use of spare parts other than those manufactured or supplied by ABS will void this warranty.

NO OTHER WARRANTIES, EXPRESS OR IMPLIED, INCLUDING IMPLIED WARRANTIES OF MERCHANTABILITY AND FITNESS FOR A PARTICULAR PURPOSE, WILL APPLY.

SECTION I

1-1 INTRODUCTION

This manual was prepared to assist you in correct installation, operation, maintenance and repair of your ABS pump. Please read it carefully and make certain that the recommendations in the chapter on installation and operation are fully understood before running the pump. ABS pumps have been designed to minimize maintenance; however, regular checks will ensure longer life and greater operating reliability.

Warranty No repair work should be carried out during the warranty period without prior factory approval. To do so will render the warranty void.

Pump No. In all correspondence and reports, make certain that the pump serial number is given.

1-2 DESIGN OF THE PUMP

Applications

The ABS Jumbo submersible screened dewatering pumps are powerful and of compact light-weight design to handle large volumes of clear drainage or contaminated water.

The Jumbo pumps are easy to handle for portable uses such as building sites, industrial drainage, irrigation and disaster emergencies. Permanent installations include removal of ground and seepage water, construction pits and underground shafts.

Motor

The electric motor and pump form a closely coupled, fully submersible watertight unit.

The squirrel cage induction motor is insulated against heat and moisture in accordance with Class F (155°C) regulations. The open jacket cooling system ensures that optimum motor cooling is accomplished. The water is drawn in through the bottom screen slots, passes over the motor housing and acts as a cooling medium before leaving through the discharge elbow.

Motor Protection

The motor is protected against damage from water ingress by mechanical seals and an oil chamber located between the volute and the motor chamber. The primary seal is a mechanical seal with long wearing, bidirectional, silicon carbide faces. The primary seal operates in the fluid being pumped and the faces are lubricated by capillary action with the oil from the seal oil chamber.

The secondary seal, located under the lower bearing at the base of the motor section, is a lip seal and is lubricated by the oil in the oil chamber, ensuring reliable sealing action and long life.

The ABS "Sealminder" located in the oil chamber which when coupled to the ABS sealminder control, senses the water contact in the oil chamber and provides a signal which gives a visual warning that water is in the oil chamber and that an inspection is necessary.

Bearings

The bearings are self-lubricating and maintenance free and have a high dynamic load rating. The upper bearing is a single row deep groove ball bearing. The lower bearings are double angular contact bearings.

Hydraulics

The hydraulics section of the pump is vulcanized with rubber and has proven high durability under abrasive conditions. The hydraulic parts are interchangeable so that the standard high volume Jumbo can be converted to high head (Jumbo HH) pump.

Materials

Housing	Cast Aluminum
Rotor shaft	Stainless Steel
O-Ring	Buna N
Impeller	Aluminum
Screen	Galvanized Steel
Fasteners	Stainless Steel

Specifications

	1Ø	3Ø
HP	4 3/4	6
RPM	3450	3450
Voltage	208,230	230/460
Amps	24.3,22	15.6/7.8

SECTION II

Operating

Electrical Connection

Prior to starting the pump a qualified electrician should inspect the system to ensure that one of the required electrical protective measures has been provided. Grounding, fault current circuit breaker etc. must comply with the regulations of the local power supply authority.

Cross section and voltage drop of the power supply cable must comply with the regulations and requirements of the local power supply authority. The voltage specified on the pump rating plate must be the same as the supply voltage.

Connection of the supply and pump cables to the terminals of the control unit should be carried out by an electrician in accordance with the markings. The system must be protected by a slow blow back-up fuse of adequate rating (corresponding to the power rating of the pump).

The electrical control devices should be protected from the weather and should be installed in a floodproof area. The pump cables should be laid in such a way that they cannot be caught up in the pump intake suction.

Checking direction of rotation

With 3-phase pumps, the direction of rotation must be checked on initial and subsequent start-ups. Incorrect direction of rotation will reduce pump performance and damage the pump.

To determine the direction of rotation, the pump should be raised and started up briefly before final installation. The electrical connection of the pump and the rotor rotation (direction of the rotation of the impeller) are correct if the pump (when starting and looking from above) makes a counter-clockwise start reaction (in the direction of the arrow "START REACTION").

If several pumps are connected to a single control unit, each pump must be checked individually.

Reversing direction of rotation

If the rotation is incorrect, disconnect the power ahead of the control panel. Interchange two pump power leads at the terminal strip. Apply power and recheck the rotation. Do not switch incoming power supply line leads as this will affect all pumps in multiple installations.

If the pump is single phase and does not rotate correctly, contact the service department immediately; do NOT switch the pump power leads.

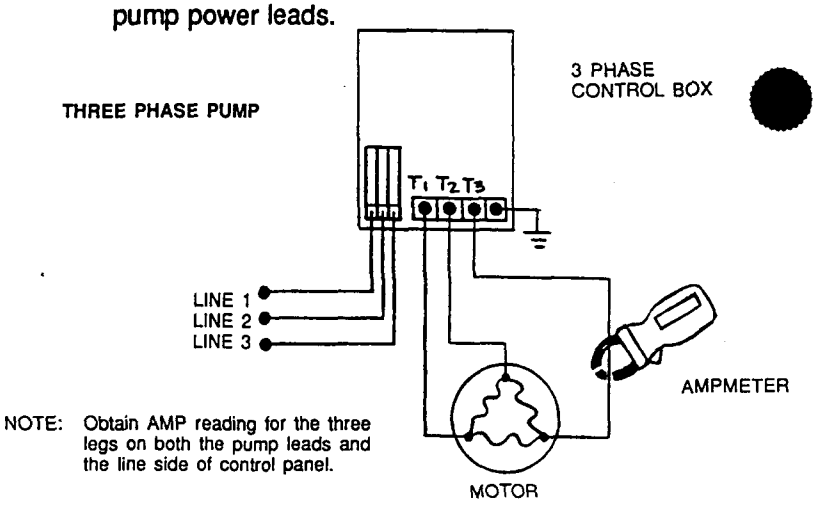

NOTE: Obtain AMP reading for the three legs on both the pump leads and the line side of control panel.

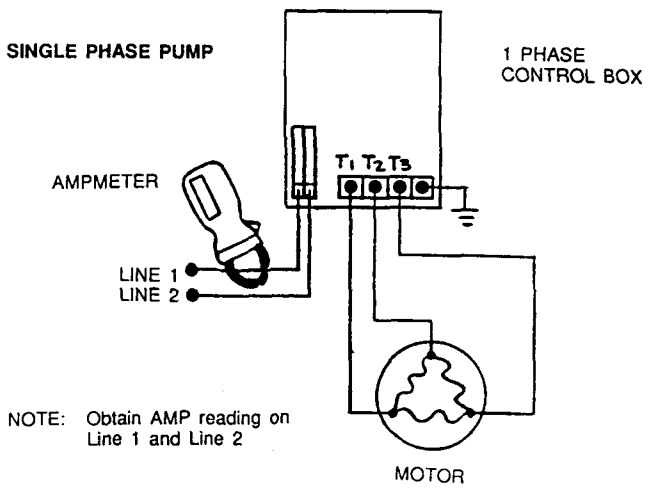

NOTE: Obtain AMP reading on Line 1 and Line 2

SECTION III

Maintenance

Maintenance Instructions

ABS pumps are reliable products of proven quality, each being subjected to careful final inspection. Permanently lubricated ball bearings ensure maximum pump serviceability.

Regular inspection and maintenance are however recommended to ensure long service life.

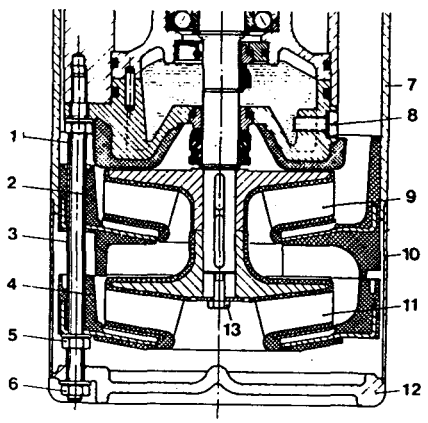

Oil Filling and Oil Change

The oil chambers of ABS submersible pumps have been filled at the factory with the correct quantity of lubricating oil. This should be changed annually.

The oil change is carried out as follows: Unscrew nuts (6) withdraw bottomplate (12) screen (10) and outer jacket (7). Place the pump in such a position that one of the two oil plug screws (8) points down. Unscrew both oil plug screws and allow oil to drain out. Rinse out oil chamber with cleansing oil. Fit the lower oil screw and refill with the correct quantity of new oil. Be sure that the oil plug screws are properly fitted and reassemble in the reverse order.

If water is found in the oil (milky emulsion), the mechanical seal unit must be checked and replaced if necessary (Contact ABS Service Department).

Oil Quantity: 0.4 Quarts, 10W High Detergent Oil

Changing Hydraulic Parts

After prolonged usage in abrasive media (sand, gravel or similar) the hydraulic parts can become worn and must be replaced.

Disconnect from power supply. Unscrew nuts (6) remove bottomplate (12) and screen (10). Unscrews nuts (5). Remove lower diffuser (4) and impeller screw (13). Remove lower impeller (11) upper diffuser (2) and upper impeller (9) and replace worn parts. When fitting the spacers (1 + 3) put the shorter one in the upper diffuser.

Cleaning

We recommend cleaning the inlet strainer at regular intervals if foliage or fibrous material are present in the pumping medium.

To prevent loam, cement or similar materials from solidifying when the pump is shut off, the pump should be cleaned by pumping clear water. For prolonged periods out of use, the pump should be stored dry and protected from frost.

Malfunctions

All Jumbo pumps are equipped with a "Sealminder" electronic moisture detector. Should the lower seal leak, the probe activates a warning light on the face of the control panel, thus preventing water damage to the motor and ensuring a minimum of costly downtime.

Should a malfunction occur, consult the troubleshooting guide in this manual. If the cause of the failure cannot be determined (**especially with repeated tripping**), contact the Product Service Department immediately.

ABS
A company in the Cardo Group

PARTS LEGEND
JUMBO 31

REF NO.	QUAN.	PART NO.	DESCRIPTION
0103	4	42400132	STUD BOLT
0108	16	11400063	NUT
0112	16	11470016	WASHER
0143	1	31140111	BOTTOM PLATE
0150	4	13400182	RUBBER SLEEVE
0151	4	42180132	DISTANCE PIECE
0152	4	42180133	DISTANCE PIECE
0155	4	15060020	RUBBER SLEEVE
0156	4	42180135	DISTANCE PIECE
0160	1	41130017	STRAINER
0201	1	35070395	IMPELLER, HH STAGE 2
0201	1	35070397	IMPELLER, HV
0204	1	11200106	SCREW
0205	1	11490001	WASHER 10X2.5MM
0206	1	11630002	KEY
0214	1	51470120	DIFFUSER, HH STAGE 2
0222	1	51330130	OIL CASING
0233	1	51470121	DIFFUSER, HH STAGE 1
0236	1	11630036	KEY
0240	1	35070396	IMPELLER, HH STAGE 1
0250	1	51470122	DIFFUSER, LOWER
0502	2	11200126	SCREW
0504	1	31090162	DISCHARGE ADAPTER 2" NPT
0504	1	31090189	DISCHARGE ADAPTER 3" NPT
0505	1	11120028	O-RING
0535	2	11340001	EYE BOLT
0540	2	11470102	WASHER
0601	1	42240183	NAMEPLATE
0901	1	43070414	PRIMARY SEAL
0905		11120201	O-RING
0908		11120895	O-RING
0910	1	43070411	SECONDARY SEAL
0914		11121012	O-RING
0920		11060085	CIRCLIP
0929	1	11070066	CIRCLIP
1004	2	11120141	O-RING
1005	2	11250103	SCREW
1006	2	11120089	O-RING
1011	1	31030109	BEARING HOUSING
1012	1	31030077	ROTOR
1013	1	61000072	STATOR 230/460V/60HZ
1013	1	61000066	STATOR 380/575V/60HZ
1014	1	31000132	MOTOR HOUSING
1015	1	11010025	BALL BEARING UPPER
1016	1	11120018	O-RING
1021	1	11020015	BALL BEARING LOWER
1023	1	11470101	WASHER
1024	1	11070067	CIRCLIP
1036	1	31010128	OUTER CASING
1037	1	11120089	O-RING
1074	1	11140045	NILOS RING
1078	4	11350010	STUD BOLT
1081	1	11070069	CIRCLIP
1101	4	11550015	DRIVE SCREW
1102	1	42020106	OMEGA RAIL
1104	2	11250112	SCREW
1105	1	11120085	O-RING
1106	1	31020201	MAIN COVER
1116	2	11560022	OIL PLUG
1117	1	12100057	CABLE 10X2.5MM
1117	1	12100059	CABLE 4X2.5MM
1117	1	12100035	CABLE 4X4MM
1119	1	11570004	CABLE GLAND 4X2.5
1119	1	11570005	CABLE GLAND 4X4
1120	1	41080008	CABLE COVER
1121	3	11470103	CABLE WASHER 4X1.5
1121	3	11470096	CABLE WASHER 4X2.5
1121	3	11470097	CABLE WASHER 4X4
1122	2	11200104	SCREW
1123	2	11470017	WASHER
1124	1	13400184	RUBBER BUSHING
1124	1	13400188	RUBBER BUSHING
1124	1	13400185	RUBBER BUSHING
1125	2	11470111	LOCK WASHER
1126	1	11250101	SCREW
1133	2	43070405	SIX (6) HOLE SEAL
1133	1	43070406	SEVEN (7) HOLE SEAL
1133	1	43070409	EIGHT (8) HOLE SEAL
1135	1	31020199	UPPER HOUSING
1136	1	11120089	O-RING
1137	2	11130014	WASHER
1141	1	12170023	WASHER

140 Pond View Drive Meriden, Connecticut 06450-7156
(203) 238-2700 FAX (203) 238-0738

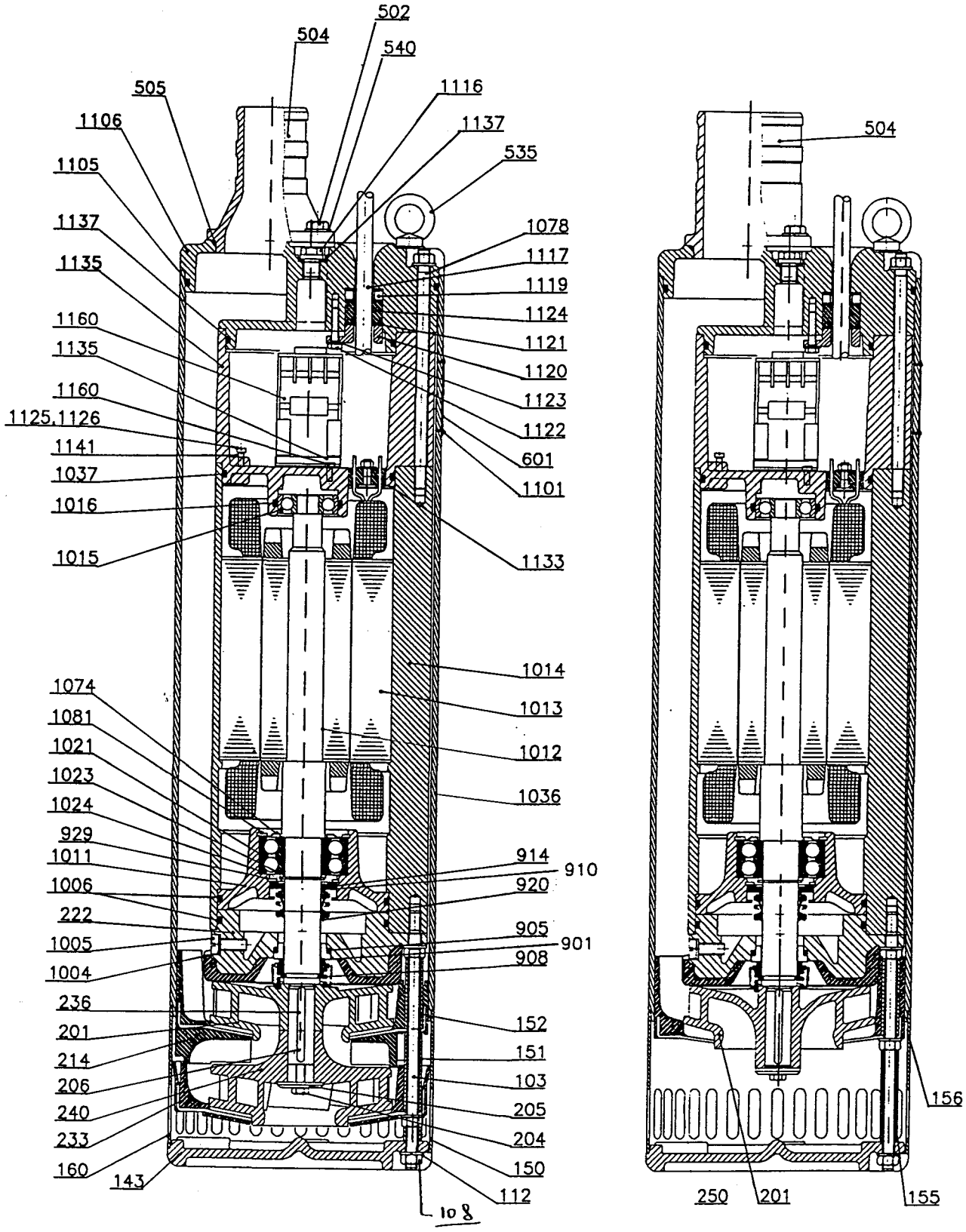
502
504
540
505
1116
1106
1137
535
1105
1078
1137
1117
1135
1119
1124
1160
1121
1135
1120
1160
1123
1125,1126
1122
1141
601
1037
1101
1016
1133
1015
1014
1074
1013
1081
1012
1021
1036
1023
1024
929
914
910
1011
920
1006
222
905
1005
901
908
1004
236
152
201
151
214
103
206
205
240
204
233
150
160
112
143
108
504
156
250
201
155

TROUBLESHOOTING CHART

SYMPTOM	POSSIBLE CAUSE	ACTION
PUMP WILL NOT START	A. Power supply failure	A. Check power supply Check electrical system for loose connections Check operating voltage
	B. Burned out fuse or tripped circuit breaker	B. Check circuit protectors Reset circuit breakers
	C. Damaged power cable	C. Check external cable for damage - repair
	D. Jammed impeller	D. Inspect and remove jamming object
	E. Failed capacitor (1Ø pumps)	E. Replace capacitor (1Ø pumps)
	F. Foreign matter build-up	F. Clean bottomscreen/bottom plate
REPEATED TRIPPING	A. Circuit protection underrated	A. Check rating and replace with proper size
	B. Current unbalance	B. Check current draw
	C. Pump connected to incorrect voltage	C. Check operating voltage
	D. Wet or damaged wiring	D. Inspect external cable, replace if worn or damaged
	E. Loose connection in pump or control panel	E. Check and tighten connections
	F. Obstruction in pump	F. Remove obstruction
	G. Incorrect motor rotation	G. Check rotation
	H. Foreign matter build-up	H. Clean bottom screen/bottom plate
PUMP WON'T SHUT OFF	A. Control panel/float failure	A. Check control panel/float
LOW FLOW	A. Incorrect pump rotation	A. Check rotation
	B. Low liquid level	B. Check liquid level
	C. Obstruction in pump or piping	C. Remove obstruction
	D. Partially closed valve(s)	D. Check and adjust valve
	E. Excessive bottom plate clearance	E. Replace bottom plate and impeller
WATER IN OIL CHAMBER	A. Loose or damaged oil plug or sealing washer	A. Check oil plug and sealing washer/O-ring
	B. Mechanical seal failure	B. Replace mechanical seal
WATER/OIL INSIDE MOTOR CASING	A. Damaged upper lip seal or mechanical seal	A. Replace seal
	B. Damaged O-ring between oil chamber and motor housing	B. Replace O-ring
	C. Damaged cable	C. Replace cable

FOR PRODUCT SERVICE: DIRECT FAX - (203) 235-1080

ABS PUMPS INC. 140 Pond View Drive Meriden, CT 06450-7156 (203) 238-2700 fax: (203) 238-0738

Installation and Operation Instructions

Goulds

MODELS

3885
3885D
3886
3886D

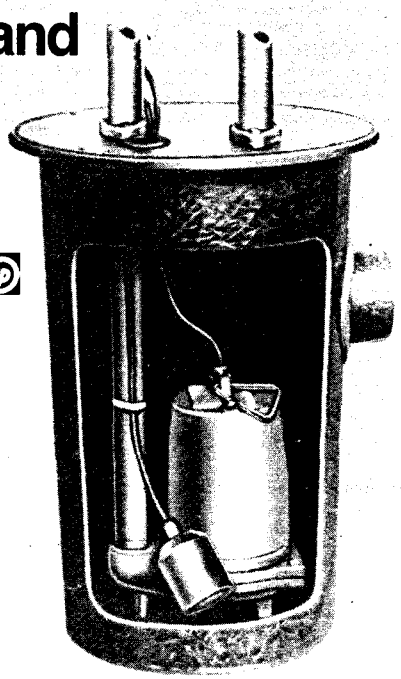

IMPORTANT

1. Inspect unit for damage. Report damage to carrier.
2. Electrical supply must be a separate branch circuit with proper fuses or circuit breakers, wire size, etc., conforming to National and Local Electrical Codes. Power supply voltage, phase and controls must match pump nameplate.
3. **Always** disconnect electrical power supply when handling pump or controls.
4. Do **not** use pump in swimming pools or hazardous liquids.
5. Liquid temperature not to exceed 160°F. (71°C)
6. Do **not** remove ground prong or use extension cords.
7. Use Goulds Pumps accessories.

Pump & Piping

1. Thread discharge pipe into discharge connection. If a check valve is used try to avoid installing it vertically. Position horizontally or at a 45° angle with valve pivot on top. This guards against small solids lodging on valve preventing it from opening. Drill a 3/16" hole in discharge pipe 2" above pump discharge connection to prevent air locking the pump. A gate valve should be installed in the system, after the check valve, to permit removal of pump or check valve for servicing. A union should be installed between check valve and pump.
2. **Rotation:** Check rotation after wiring is complete. Rotation must be counter-clockwise looking into pump suction.
   Caution: Do not feel for rotation. Will cause severe injury.
3. **Single-phase** pumps have built-in thermal overload protection with automatic reset. **Three-phase** units must be protected by a starter with proper overload protection:

Furnas Overloads Sizes Starter Size 00, 14BF32BCB1				
HP, Ph., Volts	HP	Volts	Heaters	
			E	K
0532	1/2	230	E41	K32
0534		460	E29	K22
0732	3/4	230	E48	K39
0734		460	E38	K28
1032	1	230	E51	K43
1034		460	E41	K32
1532	1 1/2	230	E55	K50
1534		460	E46	K36

Basin

Basin should have a sturdy bottom to give legs of pump adequate support. Leg height elevates pump above bottom of basin to allow effluent to reach suction opening.

When using basins without hubs, attach 4" cast iron inlet hub as required. For duplex basins, seal second hub if not used.

Basin Cover

Remove protective strip from gasket and press onto recessed portion of basin rim. With a pointed tool, poke holes through gasket into tapped holes. Do not damage threads. Route electrical cords through appropriate opening in basin cover.

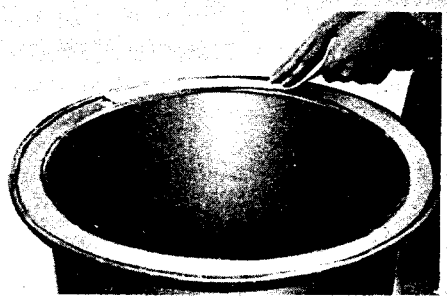

Fit basin cover over discharge pipe. Power cords are sealed with split rubber stopper. Rubber ring is placed over discharge pipe and compressed between pipe and cover by the flange (chamfered side down) to form a seal. Thread vent pipe into flange on basin cover.

Manual Operation

On pumps equipped with a molded plug, insert into a suitable outlet controlled by a switch. If a separate controller is used, turn "Hand-Off-Auto" switch to "Hand" operation.

Automatic Operation

1. Diaphragm Control Switch: A pressure activated switch providing automatic operation with 6" differential in liquid level. Turns on when liquid is 10" above bottom of switch and turns off at 4" above bottom of switch.

Caution: This switch has a vent tube which must be unobstructed and protected from moisture, dirt, etc. Mount power cord so vent tube points down.

NOTE: 1/3-1/2HP, 1ϕ pumps require Switch only.
3/4-2HP, 1ϕ pumps require a Contactor.
All 3ϕ pumps require a Mag Starter.

2. Mercury Switches: Single float switches. As the liquid-level rises or falls, the float changes angle until the mercury switch makes or breaks the circuit. See NOTE 1A above.

Float Switch Model	Application	HP Range	Electrical Rating	Wiring Configuration
A2-3	Pilot Duty	1/3-5	Single or Three Phase w/Contactor or Starter	Bare Leads
A2-5	Direct Connection, Differential Level	1/3-1/2	115 V.1 Phase	3-Prong Series Plug
A2-6		1/3-3/4	230 V.1 Phase	
A2-7	Pilot Duty, Differential Level	1/3-5	Single or Three Phase w/Contactor or Starter	Bare Leads
A2-9	Direct Connection, Differential Level	1/3-1/2	115 V.1 Phase	3-Prong Series Plug

Dual-Seal Units

Two (2) Mechanical Shaft Seals are separated by an oil-filled seal chamber. If Lower seal begins to leak, Upper seal will still be lubricated by oil in the motor cover and is protecting the motor. Normal operation can continue until prompt replacement of Lower seal which is now being temporarily lubricated by the water/oil emulsion in the seal chamber.

Lubrication

Caution: Disconnect all electrical power when handling pump or controls.

Important: Submersible pump/motor units are oil-filled. On a regular schedule, depending on usage, check oil quantity and condition as follows:

Caution: If there has been leakage, the motor cover may be under pressure. Hold a rag over inspection plug to prevent splatter when loosening it. Take a sample of the oil with a dipstick. If oil is emulsified (cream-like), or watery, it indicates a leak.

For Dual-Seal Unit, lay unit on side and also make same checks of oil in lower seal chamber through its inspection plug.

Possible causes of leakage: loose inspection plug, loose cable entry, leak at O-ring joint(s), worn shaft seal(s).

Have problem corrected and motor cover cavity refilled to 90% full (½" minimum above motor).

For Dual-Seal Unit, the lower seal cavity must also be refilled to 90% full.

Limited Warranty

This warranty applies to all pumps and related accessories manufactured and/or supplied by Goulds.

Any part or parts found to be defective within the warranty period shall be replaced at no charge to the buyer or any subsequent owner during the warranty period. The warranty period shall exist for a period of twelve (12) months from date of installation or eighteen (18) months from date of manufacture, whichever period is shorter.

A user who believes that a warranty claim exists must contact the authorized Goulds dealer from whom the equipment was originally purchased and furnish complete details regarding the claim. The dealer is authorized to adjust any warranty claims utilizing Goulds Customer Relations Department and its distributor organization.

This warranty excludes:

(a) Labor, transportation and related costs incurred by the consumer to make the allegedly defective equipment available to the dealer for inspection.

(b) Re-installation costs of repaired equipment.

(c) Re-installation costs of replacement equipment.

(d) Consequential damages of any kind.

(e) Reimbursement for loss caused by interruption of service.

GOULDS PUMPS, INC.
SENECA FALLS, NEW YORK 13148
Form No. 486-2SF Litho in U.S.A.

Problem Tracing Guide

PROBLEM	PROBABLE CAUSES	CORRECTIVE ACTION
Pump Will Not Shut Off. **Note:** Before trouble shooting automatic control, check to see that pump operates on manual control. If it does, automatic controls are at fault, If not, fault is in pump or power supply.	Diaphragm Switch Weak rubber diaphragm Plugged vent tube Dirt or sediment lodged between retainer ring and rubber diaphragm causing contacts to remain closed.	Replace switch. Clear vent tube of any obstruction. Clean area around rubber diaphragm.
	Pump is air locked.	Shut power off for approximately 1 minute, then restart. Repeat several times to clear air from pump. If system includes a check valve, a 3/16" hole should be drilled in discharge pipe approximately 2" above discharge flange connection.
	Liquid inflow matches pump capacity.	Larger pump required.
Pump Runs But Does Not Discharge Liquid	Check valves installed backwards.	Check flow indicating arrow on check valve body to insure it is installed properly.
	Check valve stuck or plugged.	Remove check valve and inspect for proper operation.
	Lift too high for pump.	Check rating table.
	Inlet to impeller plugged.	Pull pump and clean.
	Wrong rotation.	Change rotation.
	Pump is air locked.	(See corrective action above)
Pump Does Not Deliver Rated Capacity	Lift too high for pump.	Check rating table.
	Low voltage, speed too low.	Check for proper supply voltage to make certain it corresponds to nameplate voltage.
	Impeller or discharge pipe is clogged.	Pull pump and clean. Check pipe for scale or corrosion.
	Impeller may be rotating in the wrong direction.	**Single Phase Units** — Shut off power and allow impeller to stop rotating. Turn pump on again, and pump should self-correct rotation. Long discharge pipe without check valve allows liquid to drain back to sewage basin, rotating impeller backwards. If pump starts while impeller is rotating in the wrong direction, it will continue to operate in that direction. **Three Phase Units** — Interchange any two (2) power lead connections.
	Impeller wear due to abrasives or corrosion.	Replace worn impeller.
Pump Cycles Continually	No check valve in long discharge pipe allowing liquid to drain back into basin.	Install a check valve in discharge line.
	Check valve leaking.	Inspect check valve for correct operation.
	Sewage basin too small for inflow.	Install larger size sewage basin.

Repair Parts

MODEL GL885

PART NO.		PART NAME	PATTERN NO.
1K170		Casing-All Medium (M), High (H), High-High (HH), Head Models	59114
1K171		Casing-WE0311L, WE0312 Low Head/High Flow Models Only	59115
1K79		Motor Cover-⅓ HP and ½ HP Single Phase	56887
1K83		Motor Cover-½ HP-1 HP Three Phase	56887
1K150		Motor Cover-¾ HP-1½ HP Single and 1½ HP Three Phase	59055
1K167		Stuffing Box	59113
2K158	Cast Iron	Impeller All ⅓ HP	59049
2K220	Cast Iron	Impeller ½ HP WE05(H)	59086
2K219	Cast Iron	Impeller ¾ HP WE07(H)	59051
2K218	Cast Iron	Impeller 1 HP WE10(H)	59050
2K217	Cast Iron	Impeller 1½ HP WE15(H)	59050
2K225	Cast Iron	Impeller ½ HP WE05(HH)	59097
2K221	Cast Iron	Impeller 1½ HP WE15(HH)	59076
2K271	Bronze	Impeller All ⅓ HP	59049
2K272	Bronze	Impeller ½ HP WE05(H)	59086
2K273	Bronze	Impeller ¾ HP WE07(H)	59051
2K274	Bronze	Impeller 1 HP WE10(H)	59050
2K275	Bronze	Impeller 1½ HP WE15(H)	59050
2K276	Bronze	Impeller ½ HP WE05(HH)	59097
2K277	Bronze	Impeller 1½ HP WE15(HH)	59076
4K132		Ball Bearing	
4K243		Lift Handle Assembly	
4K245		Insulating Oil (Gal.) ⅓ & ½ HP 6 Pts. Req.; ¾-1½ HP 8 Pts. Req.	
4K252		"O" Ring	
5K111		Strain Relief Assembly-¾-1½ HP 1 Phase & All 3 Phase	
5K113		Strain Relief Assembly-⅓, ½ HP 1 Phase	
6K3		Plug-⅜" NPT	
9K142		Heat Shrink Tubing-1 Phase Models Only	
9K143		Capacitor Cap	
9K144		Capacitor	
9K145		Insulating Connector-3 Phase Models Only	
9K153		Cord Set-All 3 Phase (Except CSA)	
9K163		Cord Set-¾-1½ HP 1 Phase (Except CSA)	
9K164		Cord Set-⅓ & ½ HP 1 Phase 230 Volt (Except CSA)	
9K165		Cord Set-⅓ & ½ HP 1 Phase 115 Volt (Except CSA)	
9K195		Cord Set-⅓ & ½ HP 1 Phase 115 Volt-CSA	
9K196		Cord Set-⅓ & ½ HP 1 Phase 230 Volt-CSA	
9K180		Cord Set-¾-1½ HP 1 Phase-CSA	
9K181		Cord Set-All 3 Phase-CSA	
9K197		Capacitor ½ HP Single Phase Only	
10K10		Mechanical Seal Assembly	
13K5		Fillister Head Screw-St. Box to Motor Cover	
13K6		Impeller Locknut-3 Phase Only	
13K17		Capacitor Bracket	
13K144		Strap-Capacitor	
13K186		Hex Cap Screw-St. Box to Casing	
AL27121		Loctite #271	

Note: Impellers on 3 ϕ units are Loctited to motor shaft. Impellers and locknuts must be heated to be removed. When replacing impeller, use Loctite AL271121. See instruction manual.

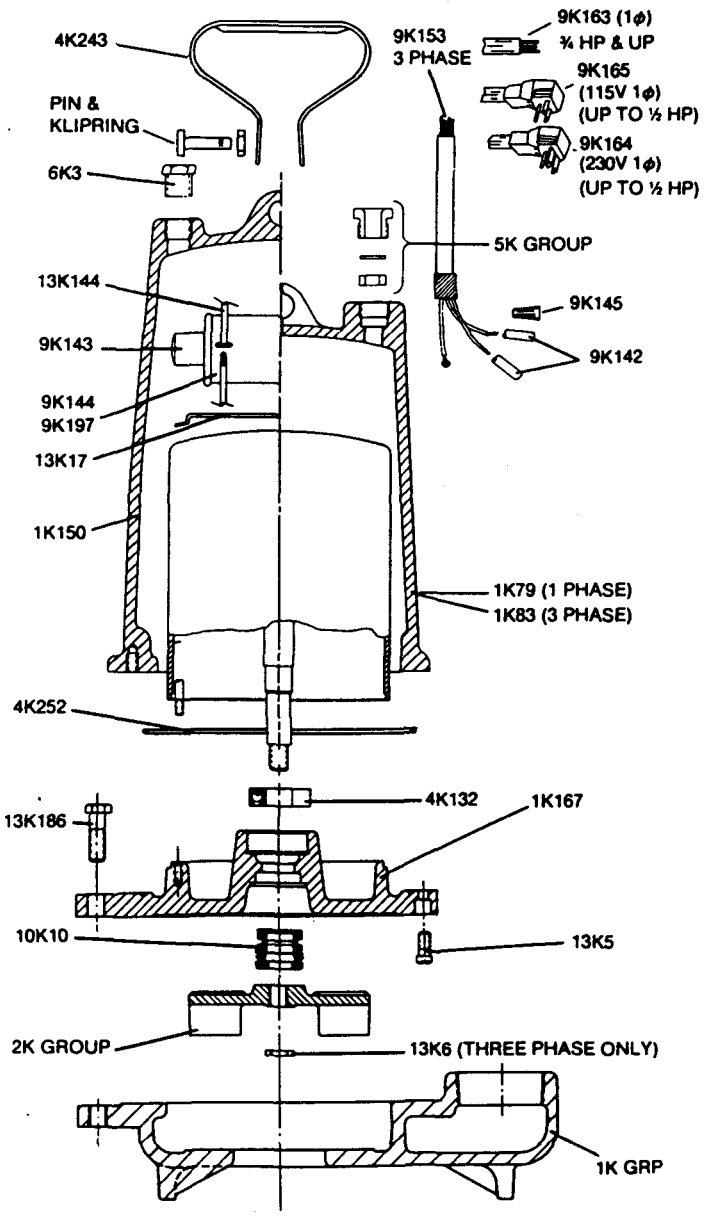

Repair Motor Numbers				
HP	Phase	Voltage	RPM	Order #
⅓	1	115	1750	118-12-01
⅓	1	230	1750	118-12-02
½	1	115	3500	118-12-22
½	1	230	3500	118-12-23
¾	1	230	3500	118-12-24
1	1	230	3500	118-12-25
1½	1	230	3500	118-12-26
½	3	208/230/460	3500	118-13-21
¾	3	208/230/460	3500	118-13-22
1	3	208/230/460	3500	118-13-23
1½	3	208/230/460	3500	118-13-24

©1987 G&L

Effective January, 1988

SPECIFICATIONS ARE SUBJECT TO CHANGE WITHOUT NOTICE.

PRINTED IN U.S.A.

PUMP CURVES

DATE MARCH 9, 1993 SECT: Dewatering TAB CD PG. 101

ABB

STANDARD

MODEL	CD				
MOTOR SIZE	5W	10W	10	20W	20
RATED HP	1/2	1.0	1.0	2.0	2.0

SOLID SIZE 1/4" BLADE 2 SPEED 3450 RPM
DISCHARGE SIZE 1.5",2",3" VOLTAGE 115/230 230/460 600; 60 Hz 1/3 PH

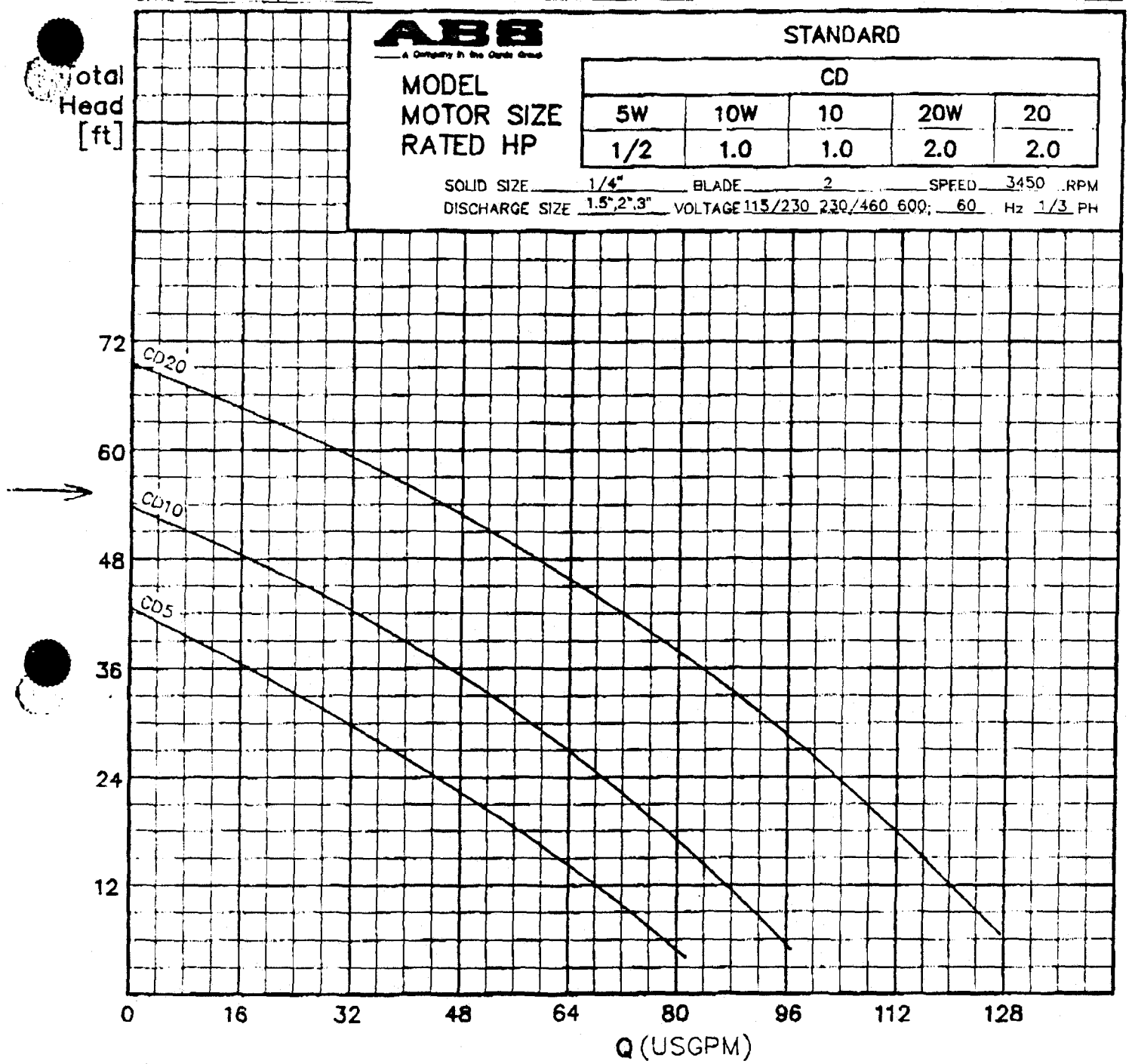

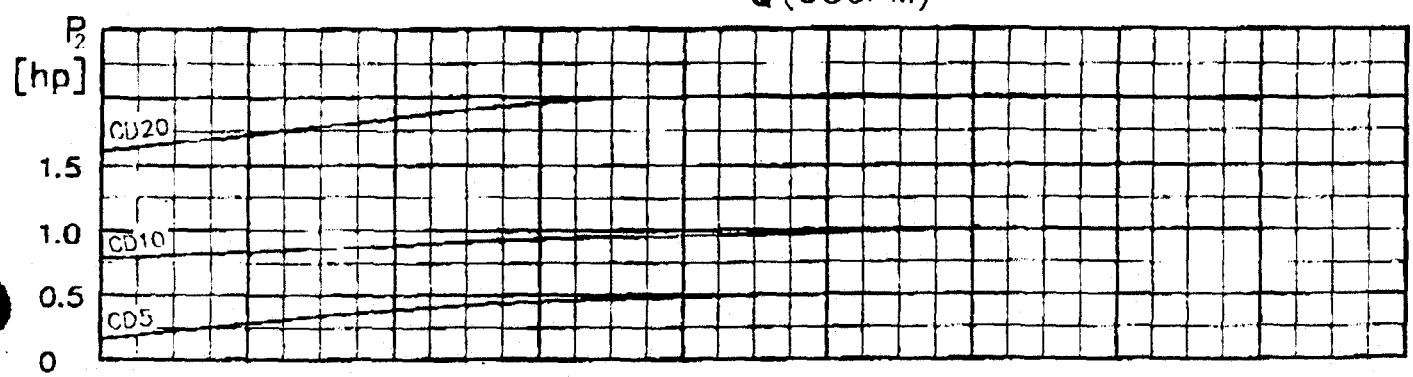

Hydraulic type: SEMI-OPEN
Wet end: H15--043/045

Discharge Size 1.5", 2", 3"

SUBMERSIBLE PUMPS

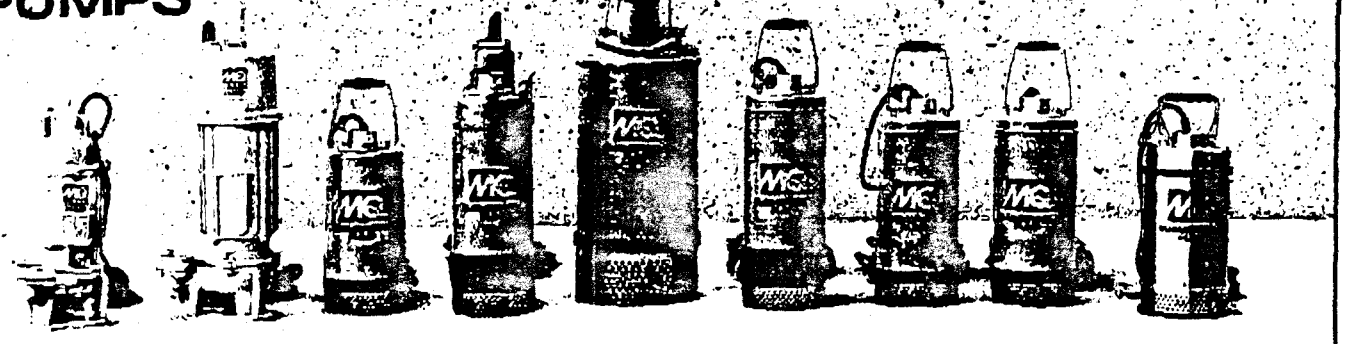

FEATURES

- ***Compact, streamlined design.***
- ***Bolt-on discharge ports*** *for easy replacement if threads become damaged.*
- ***Stainless steel hardware*** *eliminates corrosion and potential disassembly problems.*
- ***Double oil-filled seal*** *provides positive lubrication — even running dry.*
- ***Carrying handle*** *also serves as a lifting bail.*
- ***Thermal overload protection*** *prevents motor damage.*

Multiquip Electric Submersible Pumps are available in three basic configurations — a standard all-purpose design for normal clean water environments; a stainless steel model for certain chemical and marine applications; and trash models for applications where a high concentration of solids (such as stone or gravel) are encountered.

Standard Models are compact and easily transported on the job site. A streamlined die cast aluminum housing prevents the pump from hitting obstructions while being raised or lowered to the liquid source. The impeller, volute and wear plate are fabricated from tough, hi-chrome iron to withstand the toughest dewatering projects. The double oil-filled seal provides positive seal lubrication — even while running dry.

Stainless Steel Models are constructed of 304 stainless steel, with a thick rubber coating around the motor. They are ideal for all marine applications and for certain corrosive chemicals that are compatible with 304 stainless steel. In typical dewatering applications, the MO Stainless Steel Submersible Pump can last up to four times as long as cast iron or aluminum pumps.

Submersible Trash Pumps are fabricated from cast iron for the toughest construction applications. The units incorporate a unique vortex design, so that no solids pass through the impeller. Any solid that can pass through the intake will pass through the pump. Double oil-filled seals and thermal overload protection prevent damage that could ruin other pumps if left to run dry.

PUMP PERFORMANCE CURVES

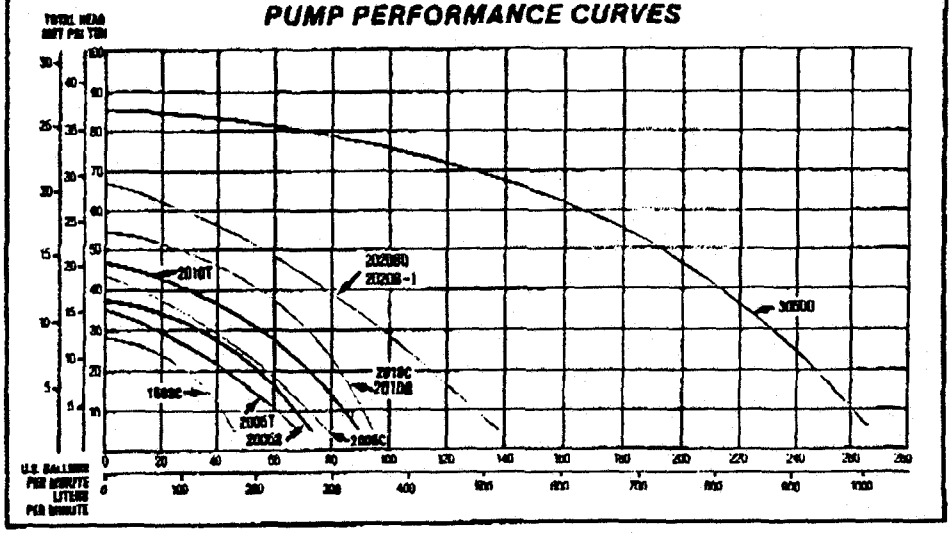

MULTIQUIP SUBMERSIBLE PUMP SPECIFICATIONS

Model	Type	Disc Size	Max. Solids	Total Head	Capacity (GPH)	HP	Voltage	Min. Size AC Genset (watts)	Running Amp.	Cable Length	Diameter	Height	Weight
ST-1503C	Std.	1¼"	—	28'	2700	1/3	115V 1ø	1200	6	25'	6.7"	16.9"	33 lb.
ST-2005C	Std.	2"	—	42'	5100	1/2	115V 1ø	1200	8	25'	6.7"	18.4"	38 lb.
ST-2010C	Std.	2"	—	55'	5700	1	115V 1ø	2300	12.5	50'	6.7"	20.0"	55 lb.
ST-2010B	Std.	2"	—	55'	5700	1	230V 1ø	2300	6.2	50'	6.7"	20.0"	55 lb.
ST-2020B-1	Std.	2"	—	66'	8700	2	230V 1ø	5000	10.5	50'	6.7"	22.8"	62 lb.
ST-2020BD	Std.	2"	—	66'	8700	2	230/460V 3ø	4000 3ø	5.6 (230V) 2.8 (460V)	50'	6.7"	23"	57 lb.
ST-30500	Std.	3"	—	86'	16,200	5	230V/460 3ø	12,000 3ø	14.2 (230V) 7.1 (460V)	50'	10.2"	26.8"	120 lb.
ST-2005S	Stain Steel	2"	-	36'	4200	1/2	115V 1ø	1200	6.7	25'	7.25"	16.5"	39 lb.
ST-2005T	Trash	2"	1"	34'	4320	1/2	115V 1ø	1200	6.2	25'	10.3"	17"	57 lb.
ST-2010T	Trash	2"	1"	45'	5700	1	115V 1ø	2300	9.4	50'	10.3"	22.7"	77 lb.

Note. Features are dependent on model and are subject to change without notice.

Performance Curves

Submersible Effluent Pumps

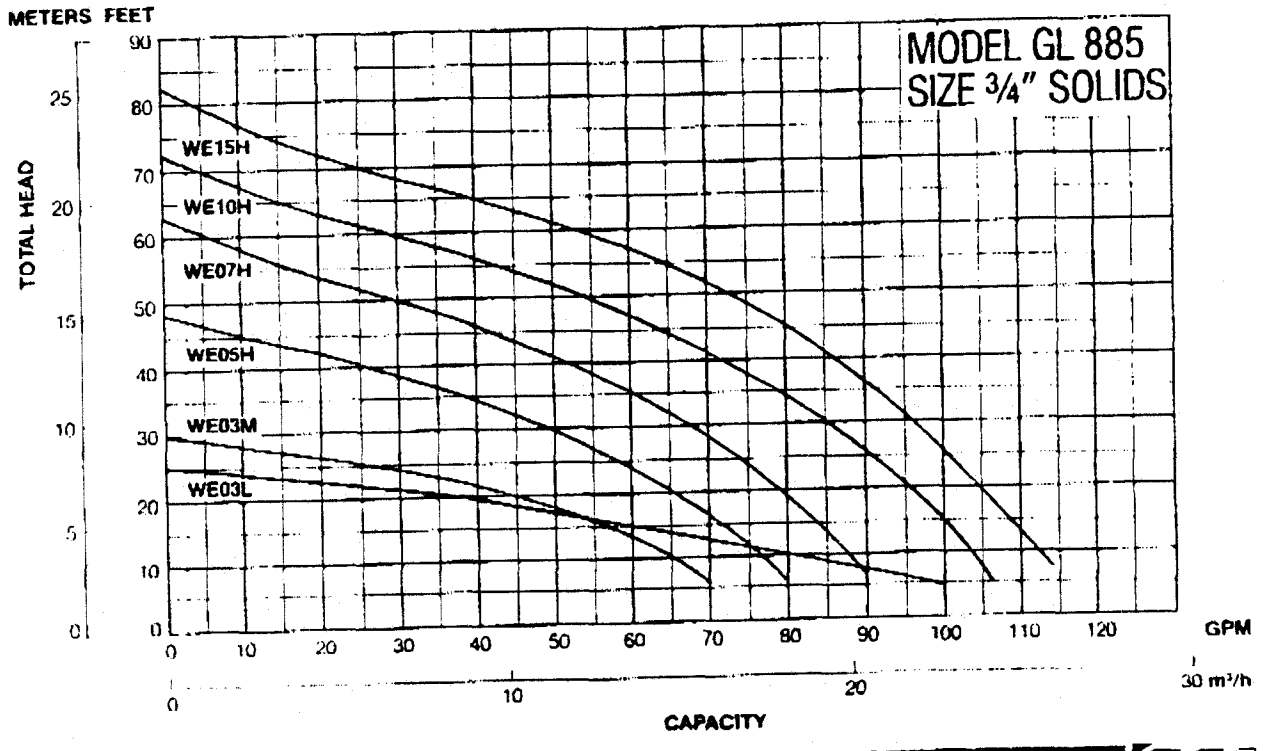

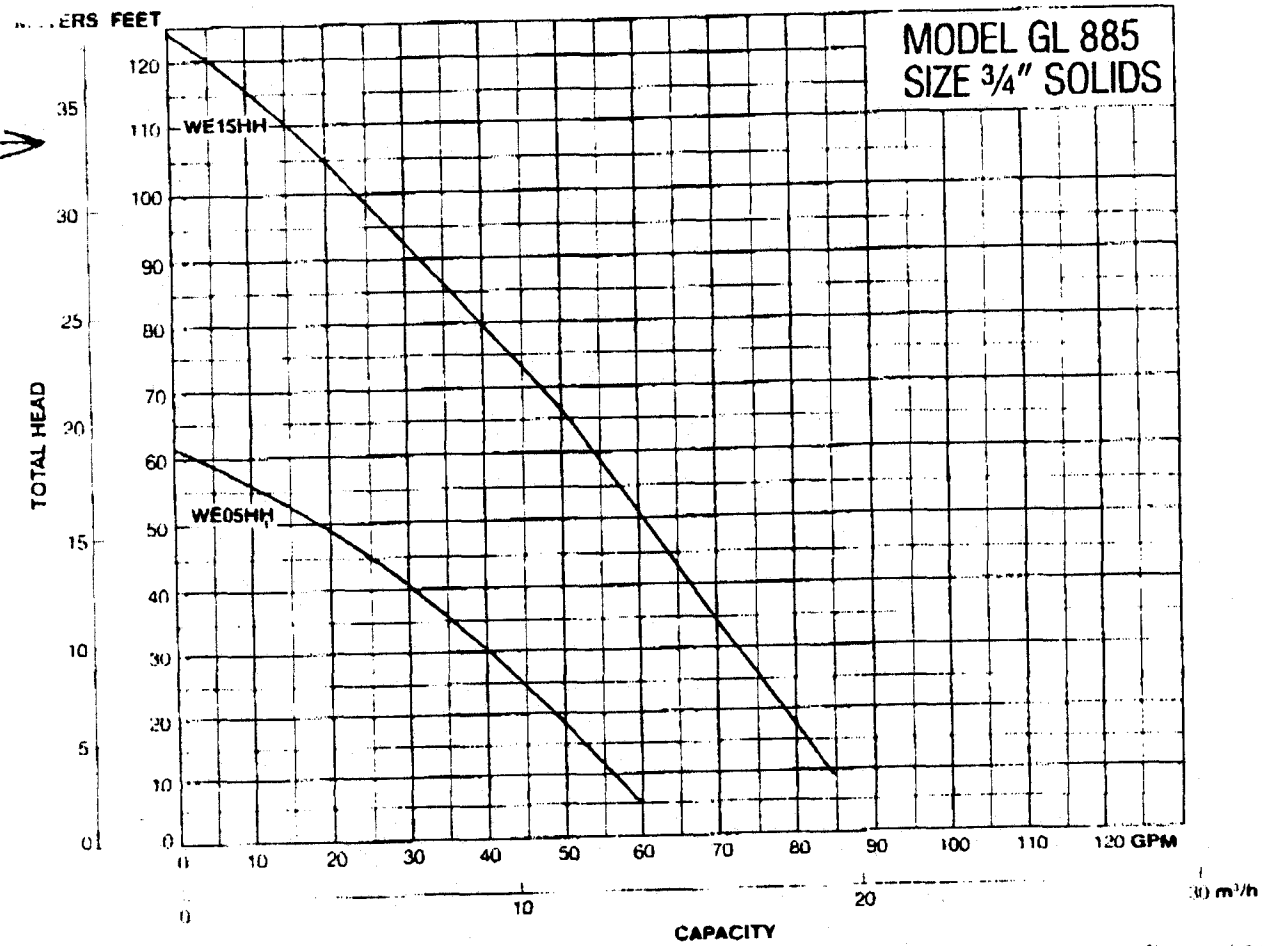

DATE MARCH 16, 1993 SECT. Dewatering TAB Jumbo RPM 3450 PG. 131

ABS
A Company in the Carlyle Group

HIGH VOLUME & HIGH HEAD

MODEL	JUMBO				
MOTOR SIZE	31HV	31HH			
RATED HP	6.0	6.0			

SOLID SIZE HV-5/16" HH-5/8" BLADE HV-3 HH-3 SPEED 3450 RPM
DISCHARGE SIZE 2", 3" VOLTAGE 230/460, 600 60 Hz 3 PH

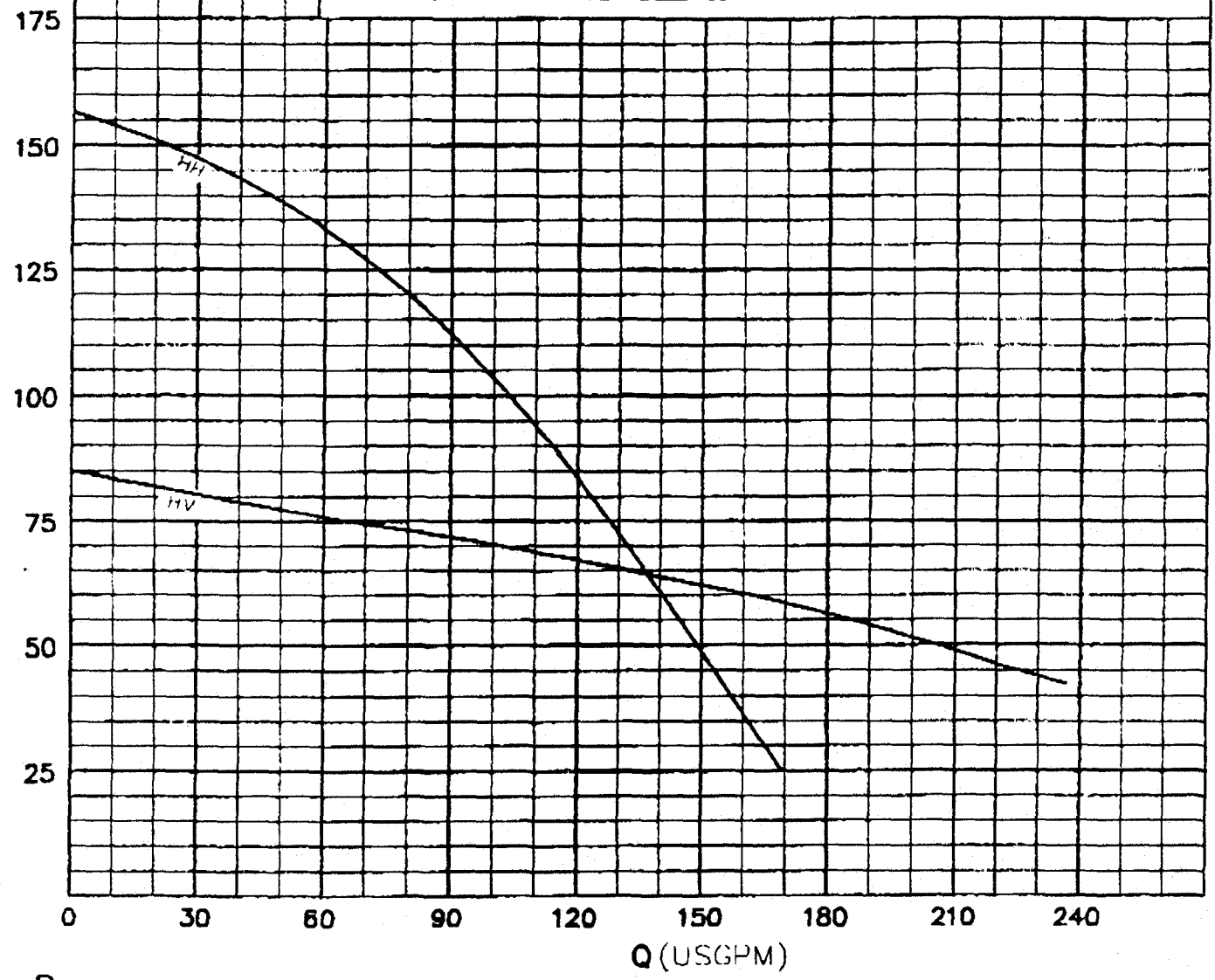

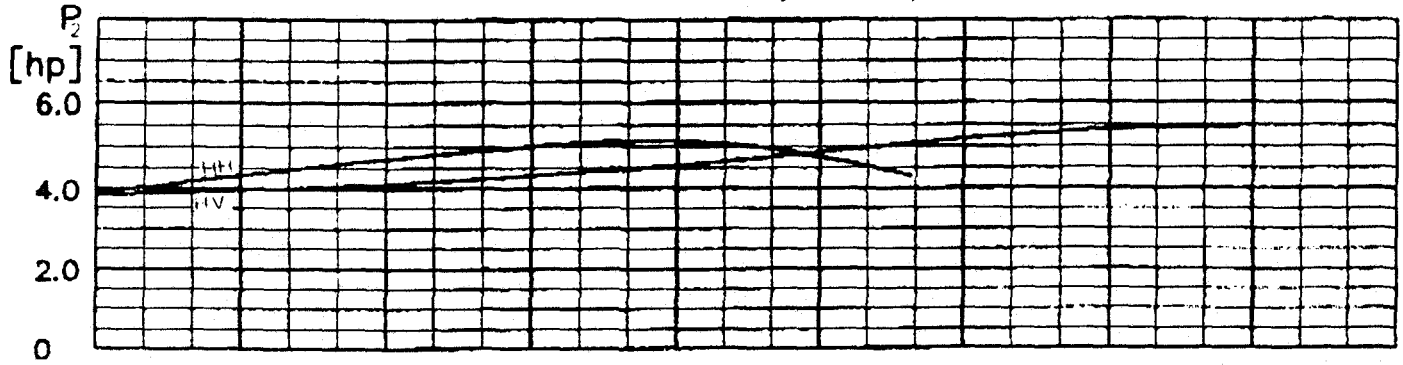

Hydraulic type: OPEN	Discharge Size 2", 3"
Wet end:	

APPENDIX D
CHEMICAL FEED PUMPS/METERING PUMPS

- CAUSTIC FEED PUMP (S/N: 950506025)
- ACID FEED PUMP (S/N: 950506026)

Manufacturer/ Supplier:	Walchem Corporation 5 Boynton Road Hopping Brook Park Holliston, MA 01746 (508) 429-1110 Fax:(508) 429-7433 Contact: Jean Quong
Model:	A771-152S LMI metering pump 0.006 - 0.42 gph @ 140 psi Variable speed; accepts 4-20 mA signal 115 VAC, 50/60 Hz, 1 ph motor

Series A7 Instruction Supplement

- Metering Pump Component Diagram
- Drive Assembly Exploded View Diagram
- Drive Assembly Parts List
- Control Panel Detail
- Wiring Diagram

Metering Pump Component Diagram

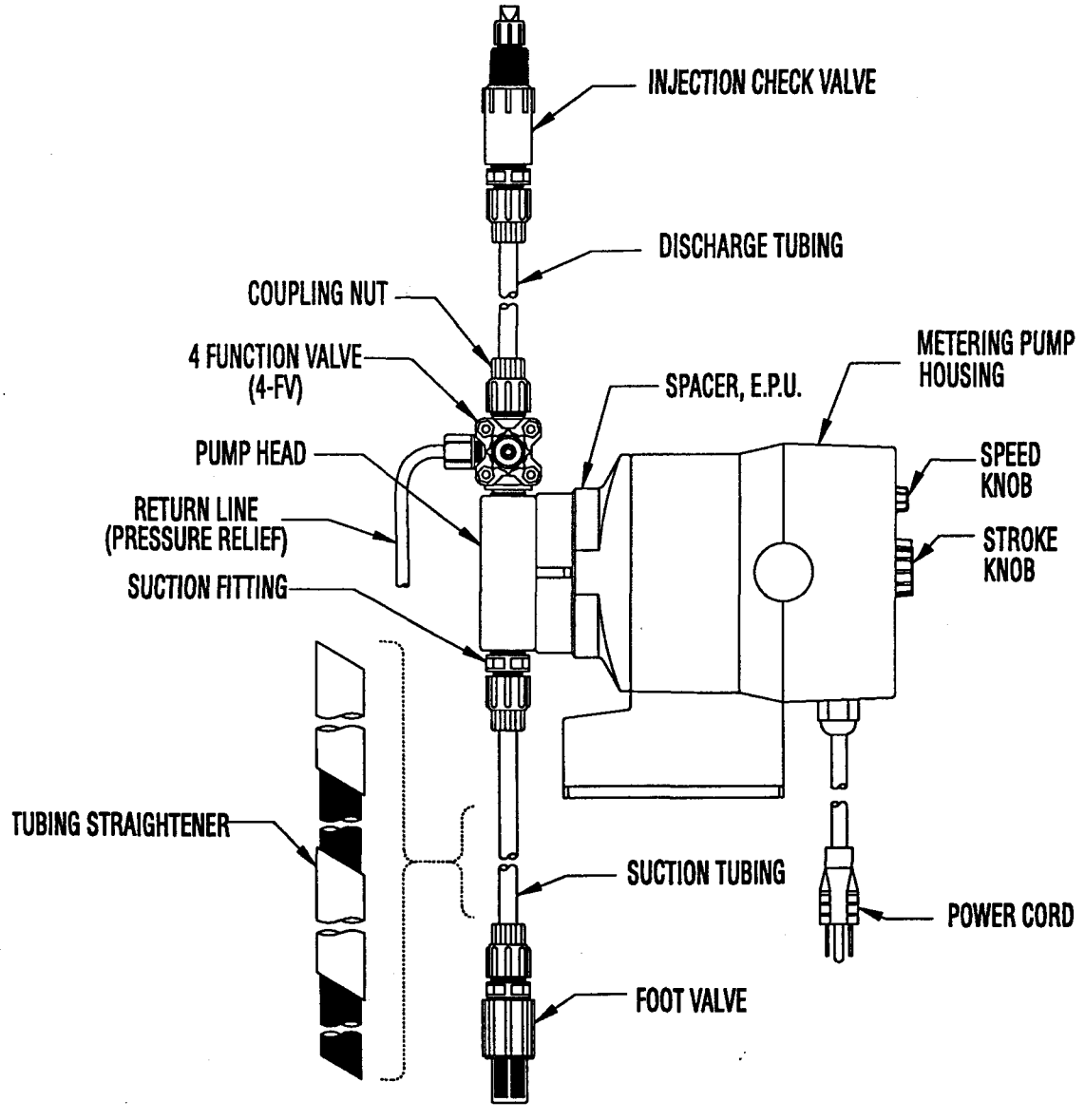

WALCHEM

WALCHEM CORPORATION
5 Boynton Road
Hopping Brook Park
Holliston, MA 01746 USA
TEL: 508-429-1110
FAX: 508-429-8737

Catalog Sec. 6.0 Pg. 1250
Replaces same of 11/92
1633.C7/94

Series A7 Drive Assembly Exploded View Diagram

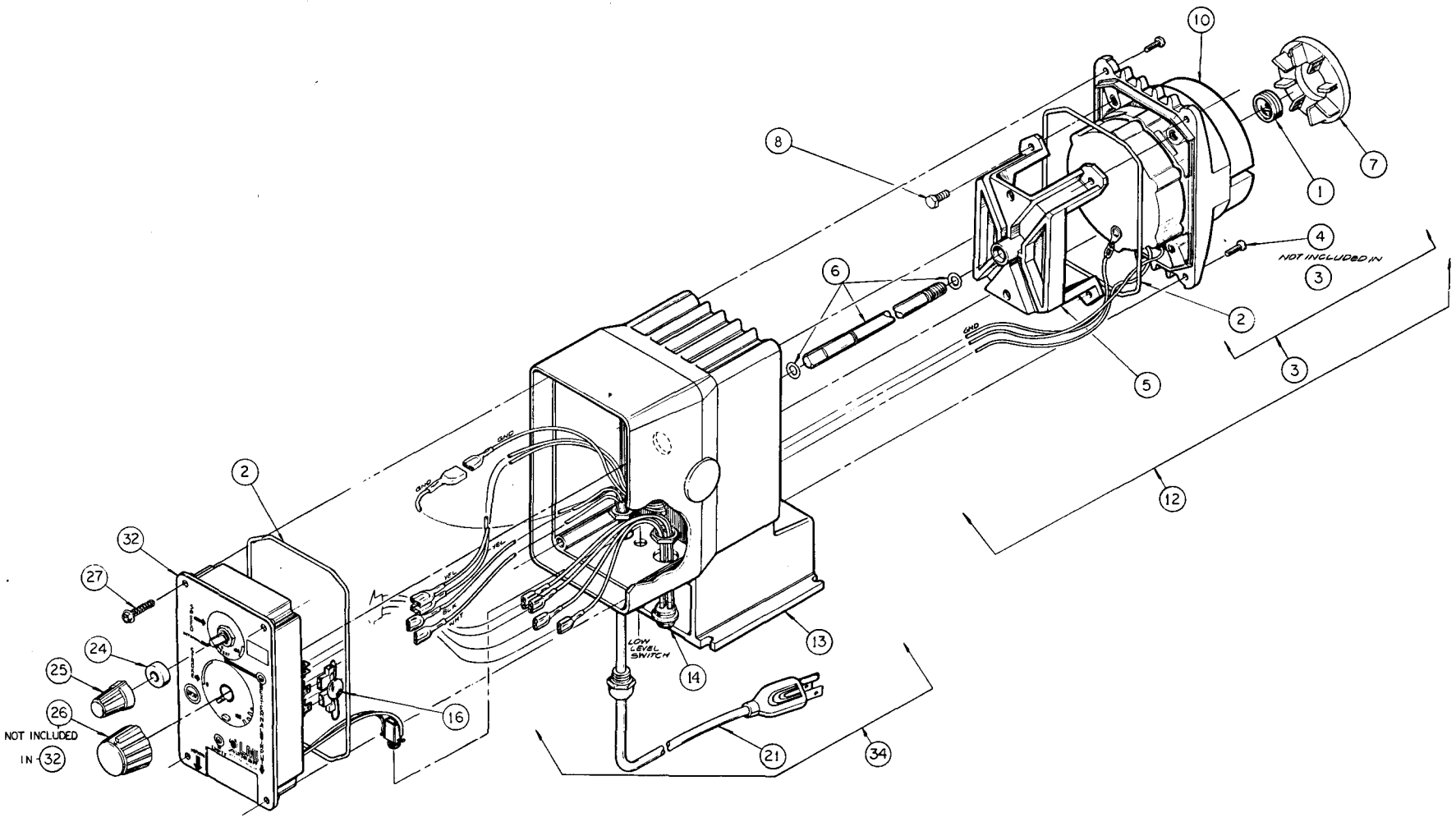

Series A7 Drive Assembly Parts List

Key No.	Model Series	Part No.	Description	Qty.
1	A7	10973	Seal	1
2	A7	10166	O-Ring	1
3	A741	28085	EPU ASM w/Disk, 120V	1
	A742, A743, A745, A746, A747	28086	EPU ASM w/Disk, 230V	1
	A751	27465	EPU ASM w/Disk, 120V	1
	A752, A753, A755, A756, A757	27466	EPU ASM w/Disk, 230V	1
	A761	27467	EPU ASM w/Disk, 120V	1
	A762, A763, A765, A766, A767	27468	EPU ASM w/Disk, 230V	1
	A771	29272	EPU ASM w/Disk, 120V	1
	A772, A773, A775, A776, A777	29273	EPU ASM w/Disk, 230V	1
	A781	29274	EPU ASM w/Disk, 120V	1
	A782, A783, A785, A786, A787	29275	EPU ASM w/Disk, 230V	1
4	A7	30306	Screw	8
5	A7	26838	Bracket	1
6	A7	31768	Adjustment Shaft Assembly	1
7	A74, A77	29445	Disk, 0.5	1
	A75, A78	29437	Disk, 0.9	1
	A76	29442	Disk, 1.8	1
8	A7	32498	Screw	4
10	A741, A751	30123	EPU, 120V	1
	A742, A743, A745, A746, A747 A752, A753, A755, A756, A757	30124	EPU, 240V	1
	A761	30128	EPU, 120V	1
	A762, A763, A765, A766, A767	30129	EPU, 240V	1
	A771, A781	30100	EPU, 120V	1
	A772, A773, A775, A776, A777 A782, A783, A785, A786, A787	30101	EPU, 240V	1
12	A741	31915	EPU w/Stroke Adjustment & Disk	1
	A742, A743, A745, A746, A747	31916	EPU w/Stroke Adjustment & Disk	1
	A751	31911	EPU w/Stroke Adjustment & Disk	1
	A752, A753, A755, A756, A757	31912	EPU w/Stroke Adjustment & Disk	1
	A761	31913	EPU w/Stroke Adjustment & Disk	1
	A762, A763, A765, A766, A767	31914	EPU w/Stroke Adjustment & Disk	1
	A771	31917	EPU w/Stroke Adjustment & Disk	1
	A772, A773, A775, A776, A777	31918	EPU w/Stroke Adjustment & Disk	1
	A781	31919	EPU w/Stroke Adjustment & Disk	1
	A782, A783, A785, A786, A787	31920	EPU w/Stroke Adjustment & Disk	1

Key No.	Model Series	Part No.	Description	Qty.
13	A7	29031	Housing	1
14	A7	28907	Jack Assembly	1
16	A741, A751, A761, A771, A781	10626	Varistor Asm 120V	1
	A742, A752, A762, A772, A782 A743, A753, A763, A773, A783 A745, A755, A765, A775, A785 A746, A756, A766, A776, A786 A747, A757, A767, A777, A787	10627	Varistor Asm 240V	1
21	A741, A751, A761, A771, A781	29033	Power Cord Asm, 120V	1
	A742, A752, A762, A772, A782	29039	Power Cord Asm, 240V	1
	A743, A753, A763, A773, A783	29042	Power Cord Asm, 220-240V, DIN	1
	A745, A755, A765, A775, A785	29044	Power Cord Asm, 200-240V, UK	1
	A746, A756, A766, A776, A786	29046	Power Cord Asm, 200-240V, AUST	1
	A747, A757, A767, A777, A787	29048	Power Cord Asm, 200-240V, SWISS	1
24	A7	30803	Gasket	1
25	A7	30709	Knob	1
26	A7	31890	Knob	1
32	A741, A751	29035	Control Panel Assembly, 120V	1
	A742, A743, A745, A746, A747 A752, A753, A755, A756, A757	29041	Control Panel Assembly, 240V	1
	A761	31737	Control Panel Assembly, 120V	
	A762, A763, A765, A766, A767	31738	Control Panel Assembly, 240V	
	A771	29378	Control Panel Assembly, 120V	1
	A772, A773, A775, A776, A777	29379	Control Panel Assembly, 240V	1
	A781	29380	Control Panel Assembly, 120V	1
	A782, A783, A785, A786, A787	29381	Control Panel Assembly, 240V	1
34	A741, A751, A761, A771, A781	29034	Housing Assembly, 120V	1
	A742, A752, A761, A772, A782	29040	Housing Assembly, 240V	1
	A743, A753, A763, A773, A783	29043	Housing Assembly, 240V	1
	A745, A755, A765, A775, A785	29045	Housing Assembly, 240V	1
	A746, A756, A766, A776, A786	29047	Housing Assembly, 240V	1
	A747, A757, A767, A777, A787	29049	Housing Assembly, 240V	1
Not Shown	A743, A753, A763, A773, A783 A745, A755, A765, A775, A785 A746, A756, A766, A776, A786 A747, A757, A767, A777, A787	28368	Connector with Wires	1

Series A7 Control Panel Detail

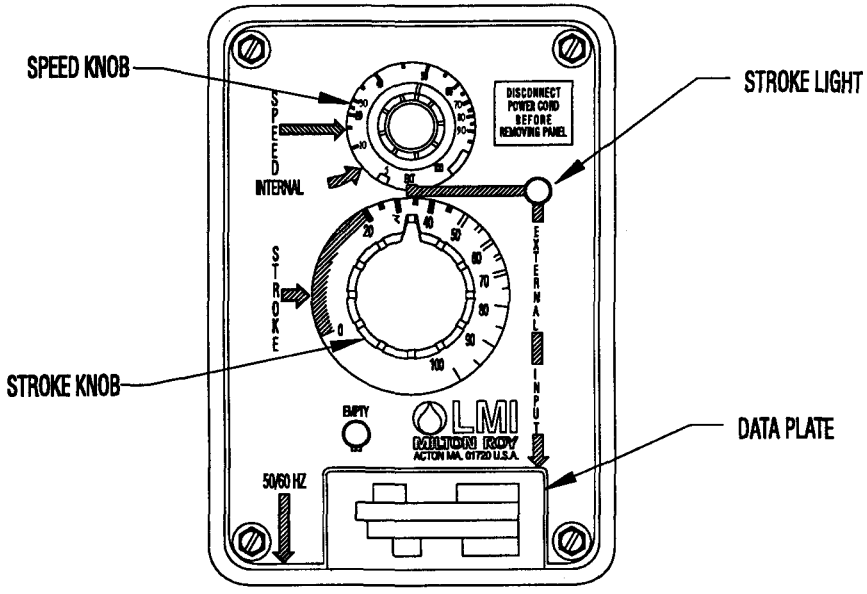

Series A7 Wiring Diagram

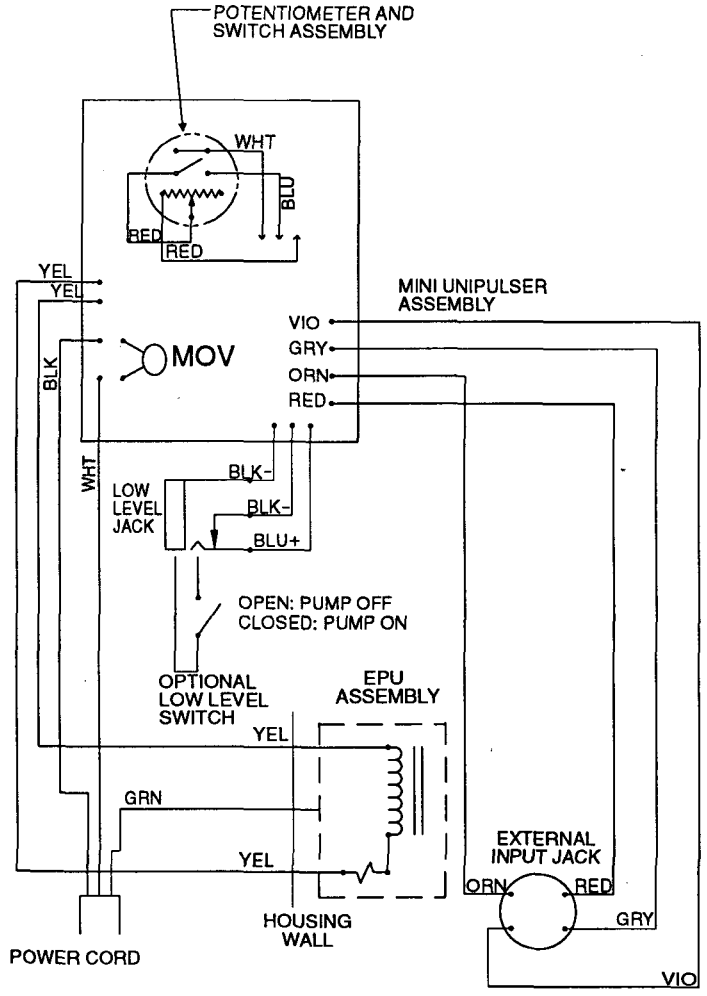

LE-151S LE-151SU LE-152S LE-152SU
LIQUID HANDLING ASSEMBLIES

CAUTION

When pumping solutions make certain that all tubing is securely attached to the fittings. It is recommended that tubing or pipe lines be shielded to prevent possible injury in case of rupture or accidental damage. Always wear protective clothing and face shield when working on or near your metering pump.

Note: See parts list for materials of construction

A. INSTALLING INJECTION CHECK VALVE

1. The purpose of the injection check valve is to prevent backflow from the treated line.
2. A 1/2" NPT female fitting with sufficient depth will accept the injection check valve.
3. To insure correct seating of the ball inside the injection check valve, the injection check valve should be installed upwards (vertically) into bottom of the pipe.

B. CONNECTING DISCHARGE TUBING

NOTE:
Cut tubing to length needed for discharge line.

1. Route tubing from the injection check valve to the metering pump, making sure it does not touch hot or sharp surfaces, or is bent so sharply that it kinks.
2. Slide the small end of the coupling nut onto tubing.
3. Slide the long, straight end of the ferrule onto tubing such that tubing exits at the cone shaped end of the ferrule.
4. Insert tubing into the valve housing so that tubing butts up against valve housing and will not go any further.
5 Slide ferrule down so that the cone shaped end fits snugly into valve housing.
6. Slide the coupling nut to the threads and engage. While pushing the tubing into valve housing, tighten the coupling nut by hand until tubing is held securely in place.

EXCESSIVE FORCE WILL CRACK OR DISTORT FITTINGS. DO NOT USE PIPE WRENCH.

C. CONNECTING SUCTION TUBING

1. Cut suction tubing to a length so that the foot valve hangs just above the bottom of the solution container. Maximum recommended vertical suction lift is 5 ft. (1.5m).
2. Follow same procedure in connecting suction tubing to suction valve and foot valve (see B. Connecting Discharge Tubing).

D. PRIMING

1. Connect pressure relief tubing to pressure relief port on the four function valve.
2. Route tubing to solution reservoir and anchor with a plastic tie. Do not submerge tubing in solution.
3. Start pump. Set at 80% speed and 100% stroke.
4. Pull on Pressure Relief knob (red or black knob), holding knob out until solution is visible through translucent return tubing.
5. The pump is now primed.

NOTE:
(a) Pump is normally self-priming if suction lift is not more than 5 ft. (1.5m), valves in the pump are wet with water (pump is shipped from factory with water in pump head) and the above steps (D. Priming) are followed.
(b) If the pump does not self prime, remove discharge valve housing and ball and pour water or solution slowly into discharge port until head is filled. Follow step D. Priming thereafter.

E. DEPRESSURIZING DISCHARGE LINE

1. It is possible to depressurize the discharge line and pump head without removal of tubing or loosening of fittings.

Be sure injection check valve is properly installed and is operating. If a gate valve or globe has been installed downstrean of injection check valve, it should be closed. Be certain relief tubing from the four function valve is connected and run to solution reservoir.

2. Pull on both anti-syphon and relief knobs.
3. The discharge line is now depressurized.
4. If injection check valve is of higher elevation than pump head, disconnecting tubing at injection check valve end will allow air to enter and cause solution to drain back to tank.

WALCHEM
WALCHEM CORPORATION
5 Boynton Road
Hopping Brook Park
Holliston, MA 01746 USA
TEL: 508-429-1110
FAX: 508-429-8737

THIS SHEET LISTS PARTS FOR FOUR DIFFERENT LIQUID HANDLING ASSEMBLIES. BE SURE YOU ARE USING THE CORRECT PARTS LIST FOR YOUR PUMP. THE LIQUID HANDLING ASSEMBLYNUMBER IS THE LAST THREE DIGITS OF YOUR PUMP MODEL NUMBER.

KEY NO.	PART NO.	DESCRIPTION	QUANTITY			
			LE-151S	LE-151SU	LE-152S	LE-152SU
1	27352	Flapper Valve, Flexoprene	1	1	1	1
2	10394	Injector Fitting, Polypropylene	1	1		
	26841	Injector Fitting, PVDF			1	1
3	10339*	Spring, PVDF	1	1	1	1
4	10338*	Ball, Ceramic .375	4	4	4	4
5	29443*	Seal Ring, Polyprel	4	4	4	4
6	28664	Valve Seat, Polypropylene .250	2	2		
	28882	Valve Seat, PVDF .250			2	2
8	10299	Coupling Nut	4	4	4	4
9	25636-16	Tubing, .250" O.D. Polyethylene	1		1	
	25636-10	Tubing, .250" O.D. Polyethylene	1		1	
	28636-16	Tubing, .250" O.D. U.V. Resistant PE		1		1
	28636-10	Tubing, .250" O.D. U.V. Resistant PE		1		1
10	29608	Head, 0.5 SI GFR Polypropylene	1	1		
	29609	Head, 0.5 SI PVDF			1	1
11	10340	Screw, 10-24 x 3/4" SS	4	4	4	4
12	30916*	Liquifram, 0.5 Fluorofilm	1	1	1	1
14	28665	Valve Housing, Polypropylene .250	1	1		
	28883	Valve Housing, PVDF .250			1	1
15	10978	Foot Valve Seat	1	1	1	1
16	10123	Strainer, Polypropylene	1	1	1	1
17	28001	Inj. Check/Back Pressure Valve Asm	1	1		
	28037	Inj. Check/Back Pressure Valve Asm			1	1
18	28010	Anti-Syphon/Pressure Relief Valve Asm	1			
	31693	Anti-Syphon/Pressure Relief Valve Asm		1		
	28046	Anti-Syphon/Pressure Relief Valve Asm			1	
	31694	Anti-Syphon/Pressure Relief Valve Asm				1
19	28004	Suction Valve Asm	1	1		
	28040	Suction Valve Asm			1	1
20	28002	Foot Valve Asm	1	1		
	28038	Foot Valve Asm			1	1
21	28071	Head Asm, LE-151S	1			
	31688	Head Asm, LE-151SU		1		
	28077	Head Asm, LE-152S			1	
	31687	Head Asm, LE-152SU				1
22	25837	Relief Cap Assembly	1	1		
	27044	Relief Cap Assembly			1	1
23	25838	Anti-Syphon Cap Assembly	1	1		
	27045	Anti-Syphon Cap Assembly			1	1
24	28703	Valve Body, Polypropylene .250	1	1		
	28704	Valve Body, PVDF .250			1	1
25	25627	Screw, 6-32 x 1 1/4" SS	4	4	4	4
26	25628	Nut, Hex 6-32 SS	4	4	4	4
27	25631	Coupling Nut	1	1	1	1
30	28663	Ferrule	4	4	4	4
NS	32293	Tubing Straightner Asm.	1	1	1	1

*Parts included in Spare Parts Kit SP-U8

NOTE:
Threaded connections into pump head are ¾"-16 straight threads. **Do not use Teflon tape.** These joints are sealed by seal ring valve seats (Item 5 on exploded view).

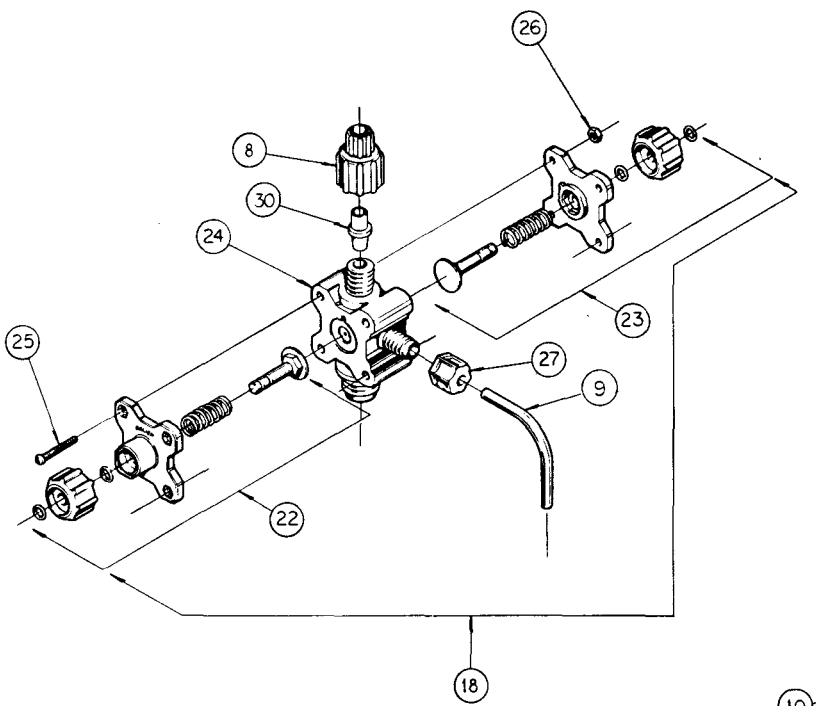

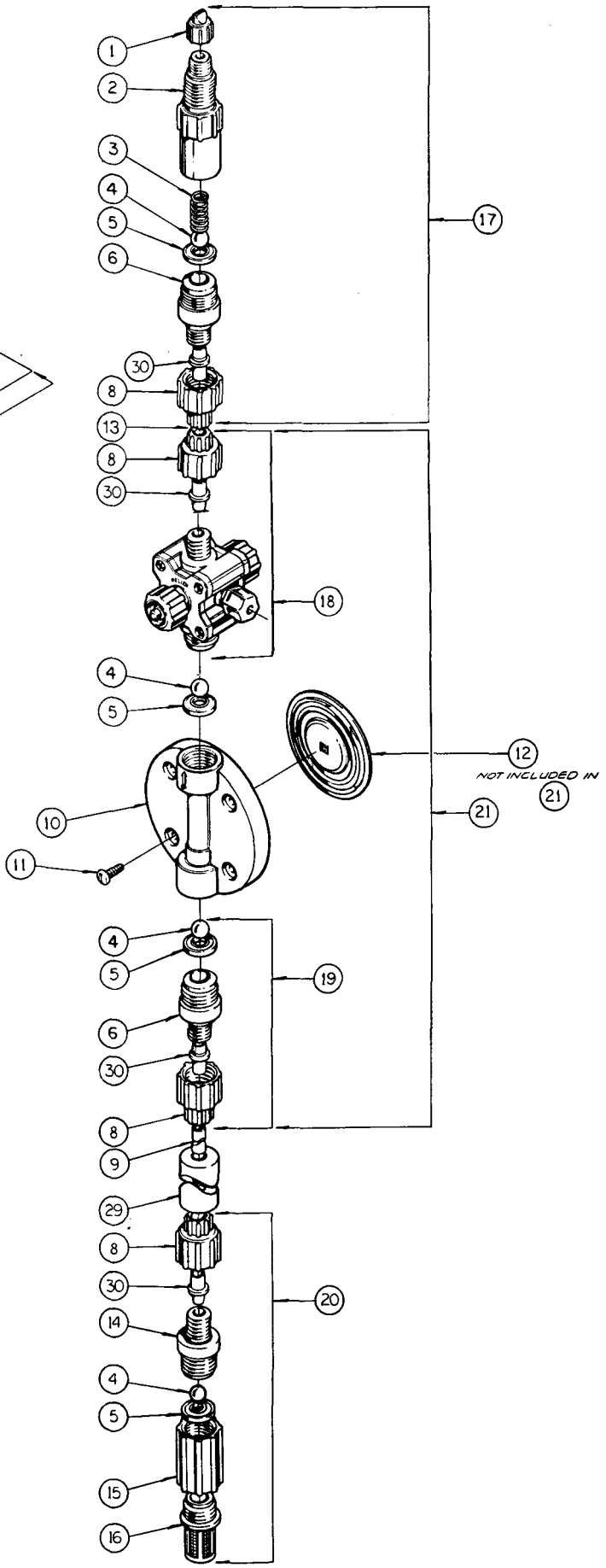

WALCHEM

WALCHEM CORPORATION
5 Boynton Road
Hopping Brook Park
Holliston, MA 01746 USA
TEL: 508-429-1110
FAX: 508-429-8737

WALCHEM CORPORATION
5 Boynton Road
Hopping Brook Park
Holliston, MA 01746 USA
TEL: 508-429-1110
FAX: 508-429-8737

ELECTRONIC METERING PUMPS

INSTALLATION
MAINTENANCE
TROUBLESHOOTING

Please record the following data:
(Information on Pump Box and Pump Data Plate)

Pump Model Number: _____
Pump Serial Number: _____
Installation Date: _____
Installation Location: _____

When ordering replacement parts for your LMI Metering Pump or accessory, please include the complete model number and serial number of your unit.

WALCHEM CORPORATION
5 Boynton Road
Hopping Brook Park
Holliston, MA 01746 USA
TEL: 508-429-1110
FAX: 508-429-8737

Catalog Sec. 6.0, pg.0001
Replaces same of 3/94
1615.G 7/94

CONTENTS

1.0 INTRODUCTION 4

2.0 UNPACKING CHECKLIST 6

3.0 PRE-INSTALLATION INSTRUCTIONS 8

4.0 INSTALLATION 10

5.0 METHODS OF EXTERNAL TRIGGERING 20

6.0 START-UP & ADJUSTMENT 22

7.0 CALIBRATION 25

8.0 SPARE PARTS REPLACEMENT & ROUTINE MAINTENANCE 28

9.0 PROPER ZEROING/ KNOB REPLACEMENT 34

10.0 TROUBLESHOOTING 36

11.0 EPU RESISTANCE CHART 40

1.0 INTRODUCTION

LMI is the world's most versatile manufacturer of economical and efficient metering pumps. This manual addresses the installation, maintenance and troubleshooting procedures for manually and externally controlled pumps. LMI has a worldwide network of stocking representatives and authorized repair centers to give you prompt and efficient service.

Please review this manual carefully. Pay particular attention to warnings and precautions. Always follow good safety procedures, including the use of proper clothing, eye and face protection.

This manual is for A, B, C, J, P, Z Series pumps.

EXAMPLE:

Your pump consists of two parts:

1. The **Drive Assembly** and
2. The **Liquid Handling Assembly.**

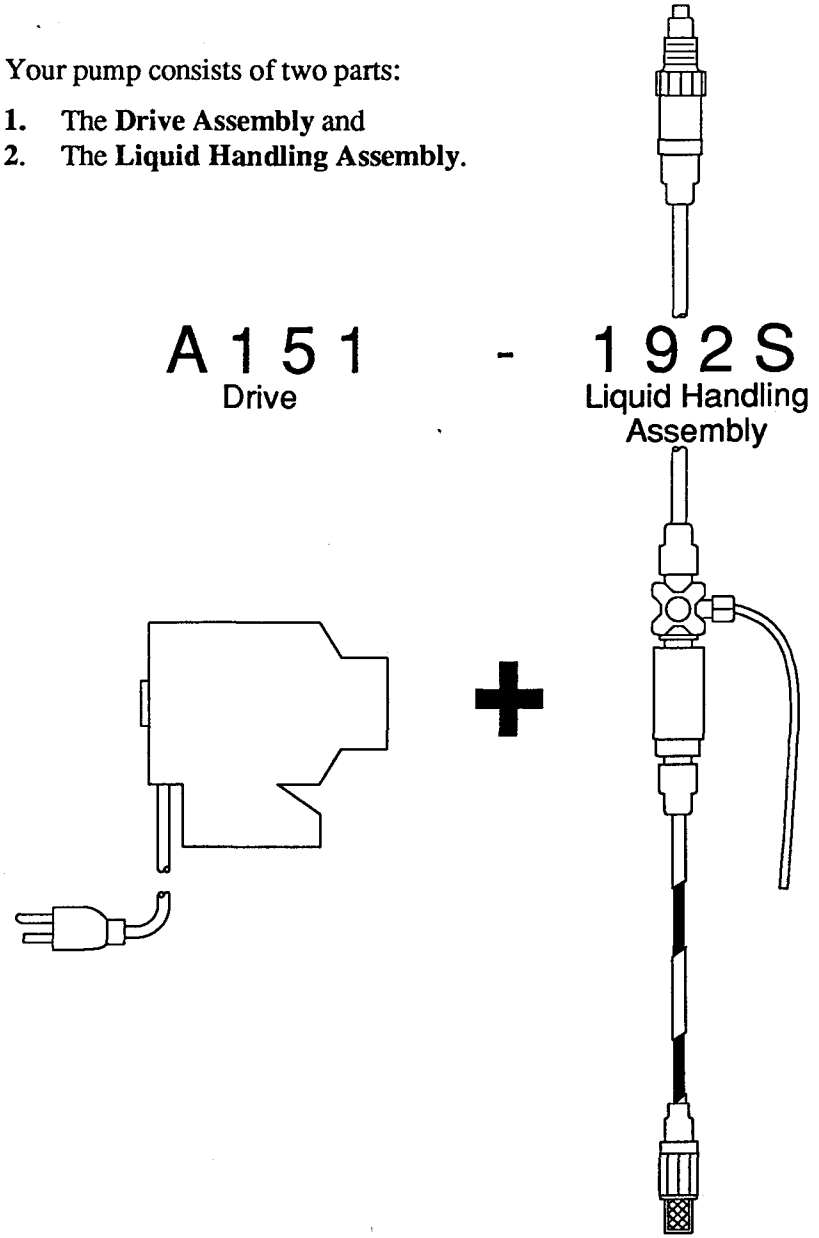

2.0 UNPACKING

Your carton will contain the following items. Please notify the carrier immediately if there are any signs of damage to the pump or its parts. Notify your pump supplier if any of the following parts are missing.

Please refer to the enclosed Drive Assembly Parts List Sheet for an illustration of your complete pump, electrical diagram and a parts list.

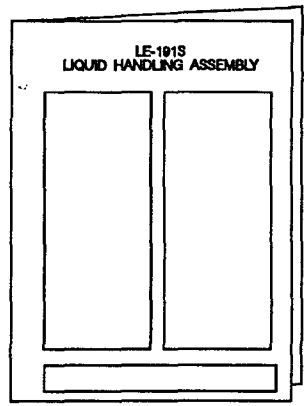

Liquid Handling Assembly Sheet

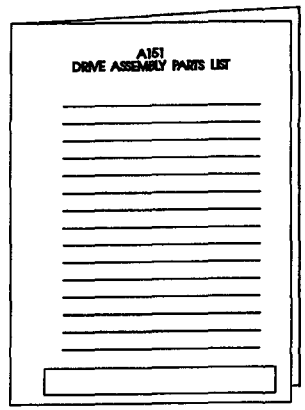

Drive Assembly Parts List & Exploded View Drawing

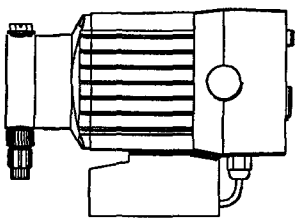

Metering Pump

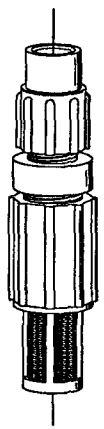

Foot Valve

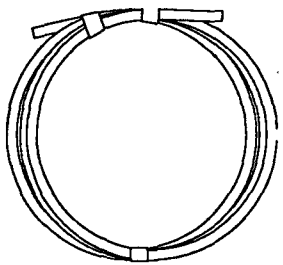

Tubing

Depending on the model, your carton may contain 0, 1, 2 or 3 rolls of tubing. Your carton may contain an additional roll of clear vinyl tubing, this is for connection to the SUCTION SIDE OF THE PUMP HEAD ONLY.

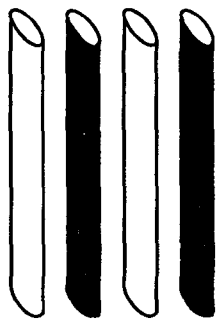

Suction Tubing Straightener

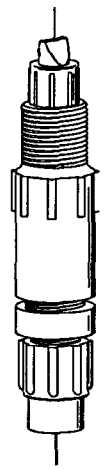

Injection Check Valve

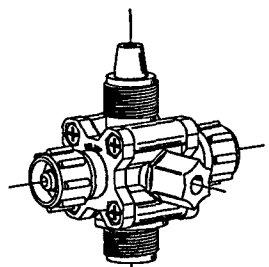

FOUR FUNCTION Valve (4-FV) and Tubing

Your carton may or may not contain a 4-FV, an accessory for pump models ending in "M" or "S".

3.0 PRE-INSTALLATION INSTRUCTIONS

The following precautions should be taken when working with LMI metering pumps. Please read this section carefully prior to installation.

3.1 Precautions

Protective Clothing

ALWAYS wear protective clothing, face shield, safety glasses and gloves when working on or near your metering pump. Additional precautions should be taken depending on the solution being pumped. Refer to MSDS precautions from your solution supplier.

Water Pre-Prime

All LMI pumps are pre-primed with water when shipped from the factory. If your solution is not compatible with water, disassemble the Pump Head Assembly. Thoroughly dry the pump head, valves, seal rings, balls and Liquifram® (diaphragm). Re-assemble head assembly tightening screws in a crisscross pattern. Refill the pump head with the solution to be pumped before priming the pump. (This will aid in priming).

Solution Compatibility

Your Liquid Handling Assembly Sheet lists the materials of construction included in the liquid handling portion of your pump. Should you have any further compatibility questions on your LMI Metering Pump, review the **LMI Pump Selection Guide** and **Chemical Resistance Chart** for compatibility. If this sheet is not available to you, call your local LMI distributor, or the LMI Customer Service Department for further information.

Tubing Connections

Inlet and outlet tubing or pipe sizes must not be reduced. Make certain that all tubing is SECURELY ATTACHED to fittings prior to start-up. (See Section 4.3, Tubing Connections). ALWAYS use LMI supplied tubing with your pump, as the tubing is specifically designed for maximum compatibility with the pump operation. It is recommended that all tubing be shielded to prevent possible injury in case of rupture or accidental damage.

Fittings And Machine Threads

All fittings should be hand tightened to a maximum of 1/8 - 1/4 turn after the fitting contacts the seal ring. DO NOT OVERTIGHTEN FITTINGS. Overtightening or use of a pipe wrench can cause damage to the fittings, seal rings, or pump head, causing the pump to LOSE PRIME OR NOT FUNCTION.

All LMI pumps have straight 3/4"-16 or 1"-12 machine threads on the head and fittings and are sealed by the seal rings. DO NOT use Teflon tape or pipe dope to seal threads. Teflon Tape may only be used on the 1/2" NPT thread side of the Injection Check Valve before installing in a pipe line or tee.

Plumbing

Always adhere to your local plumbing codes and requirements. Be sure installation does not constitute a cross connection. Check local plumbing codes for guidelines. LMI is not responsible for improper installations.

Electrical Connections

WARNING: to reduce the risk of electrical shock, the metering pump must be plugged into a grounded outlet with ratings conforming to the data on the pump control panel. The pump must be connected to a good ground. **DO NOT USE ADAPTERS!** All wiring must conform to local electrical codes.

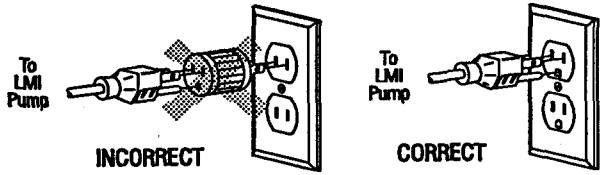

4.0 INSTALLATION

4.1 Pump Location and Installation

Locate pump in an area convenient to solution tank and electrical supply.

The pump should be accessible for routine maintenance, and should not be subjected to ambient temperatures above 122°F (50°C). If the pump will be exposed to direct sunlight, LMI black, UV resistant tubing should be installed.

4.2 Pump Mounting

The pump can be mounted in one of two ways:

A. **FLOODED SUCTION** (ideal installation) or

B. **SUCTION LIFT** - when suction lift is less than 5 feet (1.5 m) for solutions having a specific gravity of water. For denser solutions, consult the factory.

Your LMI metering pump must be mounted so that the suction and discharge valves are vertical. **NEVER position pump head and fittings horizontally.**

The pump is mounted at the base of the storage tank. This installation is the most trouble-free, and is recommended for very low outputs, solutions that gasify, and high viscosity solutions. Since the suction tubing is filled with solution, priming is accomplished quickly and the chance of losing prime is reduced.

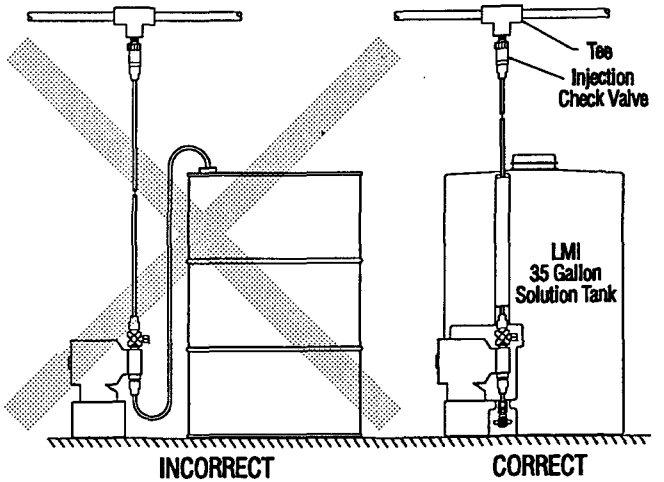

Avoid this type of false flooded suction.

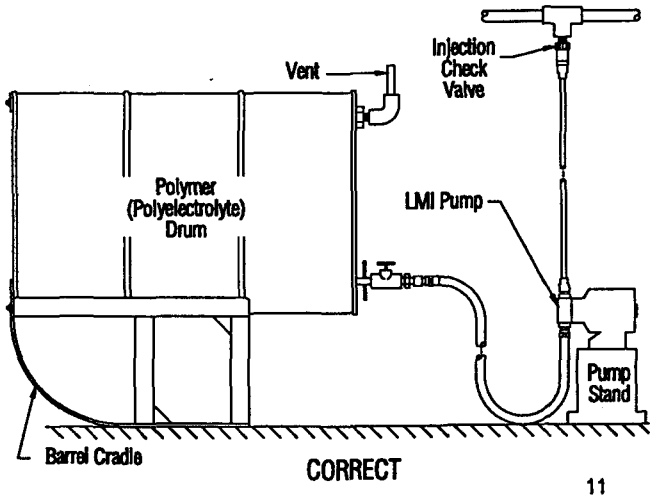

4.2B1 Suction Lift - Wall Bracket Mount

The pump may be mounted using an LMI Wall Mount Bracket Assembly (part no. 28272) directly above the solution tank. A pump mounted in this manner allows for easy changing of solution tanks or drums.

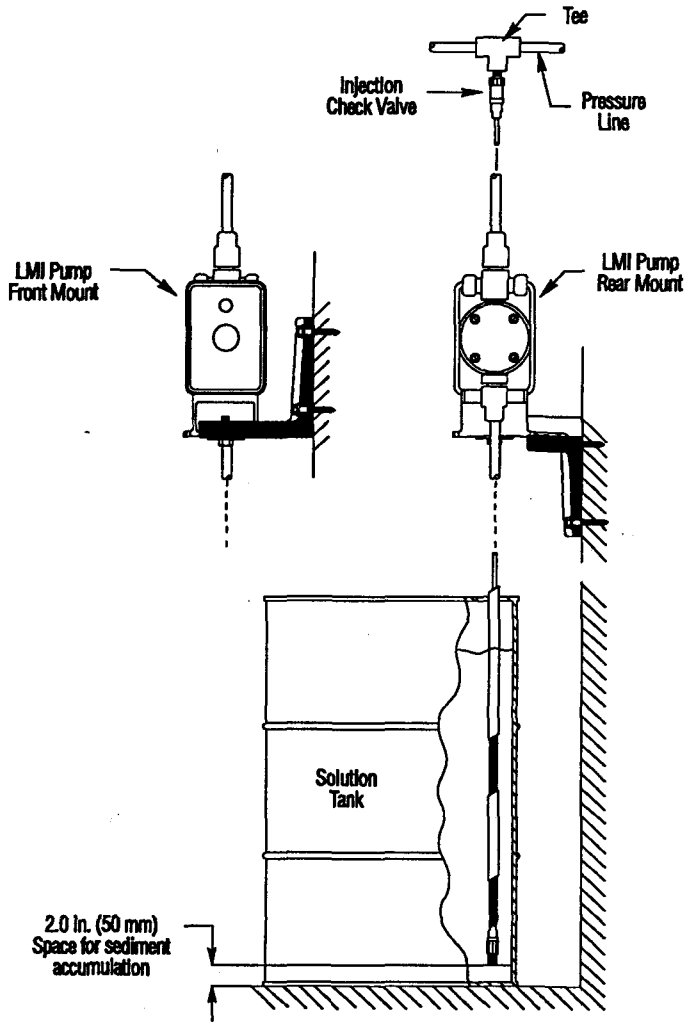

4.2B2 Suction Lift - Tank Mount

The pump may be mounted on a molded tank provided there is a recess to keep pump stationary. LMI 10 gallon tanks (part no. 27421) and 50 gallon tanks (part no. 26350) have molded recesses for pump mounting.

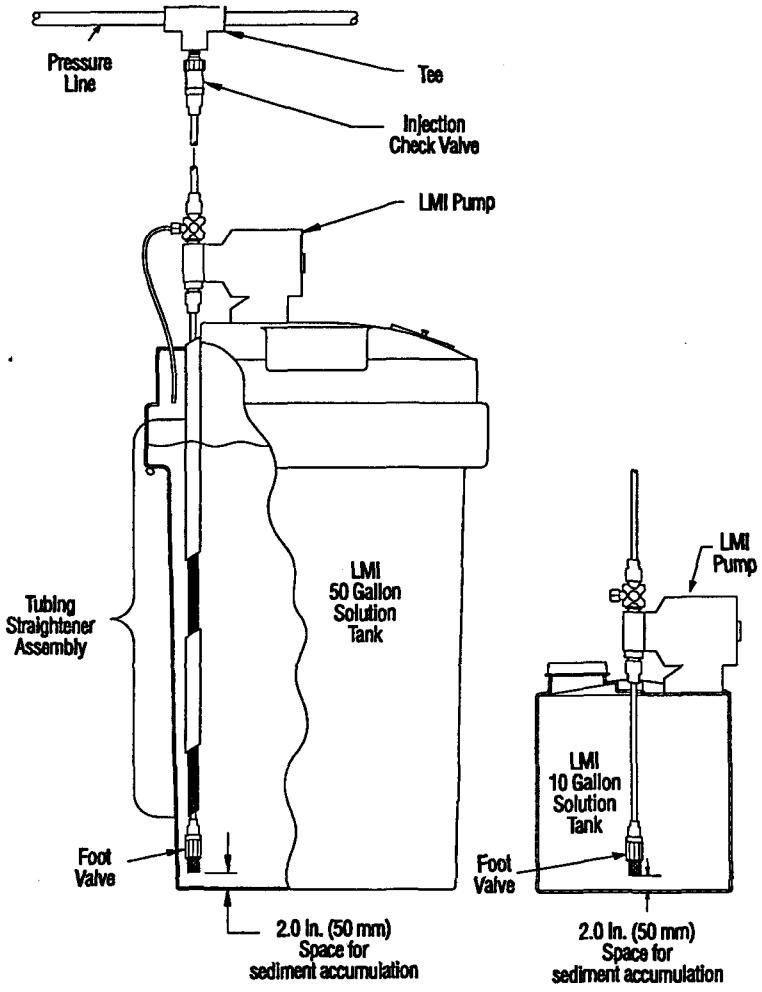

4.2B3 Suction - Shelf Mount

The pump may be mounted on a shelf (customer supplied) maintaining a suction lift of less than 5 feet (1.5 m). An LMI mounting kit (part number 10461) is available for securing the pump to a shelf.

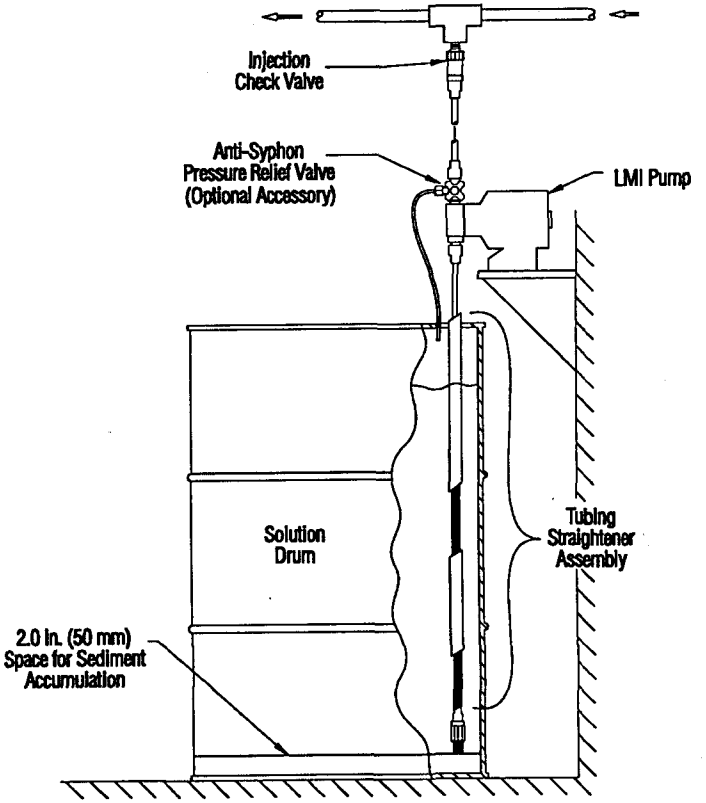

4.3 Tubing Connections

A. Use only LMI tubing.

B. **DO NOT USE CLEAR VINYL TUBING ON THE DISCHARGE SIDE OF THE PUMP.** The pressure created by the pump can rupture the vinyl tubing.

C. Before installation, all tubing must be cut with a clean square end.

D. Valve and head connections from the factory are capped or plugged to retain pre-prime water. Remove and discard these caps or plugs before connecting tubing.

DO NOT USE PLIERS OR PIPE WRENCH ON COUPLING NUTS OR FITTINGS.

Tubing Connection 1/4" O.D. (.250") Tubing

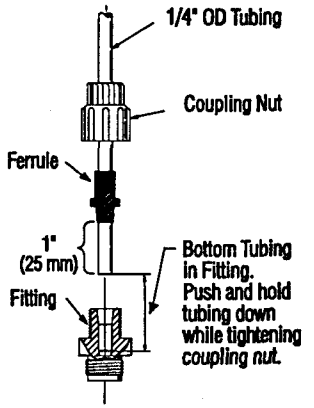

Tubing Connection 3/8" O.D. (.375") Tubing

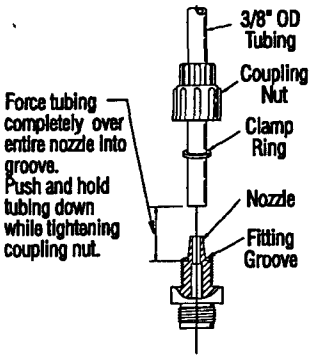

Tubing Connection 1/2" O.D. (.5") Tubing

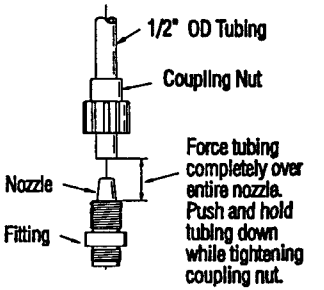

1/4" or 1/2" NPT Pipe Thread Connection

NOTE: See Metric Liquid Handling Sheet for metric tubing connections.

4.4 Four Function Valve (4-FV)

Some pump models come supplied with a 4-FV (pump models which end in "M"or"S"). If your pump is not equipped with this feature, and you feel it is needed in your application, it can be purchased as an accessory. Contact your local distributor for ordering information. The functions of the 4-FV are:

1. **Anti-Syphon (automatic).**
   Prevents syphoning when pumping downhill or into a vacuum.
2. **Back Pressure (automatic).**
   Supplies approximately 25 psi back pressure to prevent over pumping when little or no system back pressure is present.
3. **Pressure Relief (automatic).**
   If discharge line is overpressurized, the valve opens sending the solution back to your supply tank.
4. **Line Depressurization (manual).**
   By pulling both knobs, the discharge line will drain back to your supply tank.

Typical 4-FV Applications

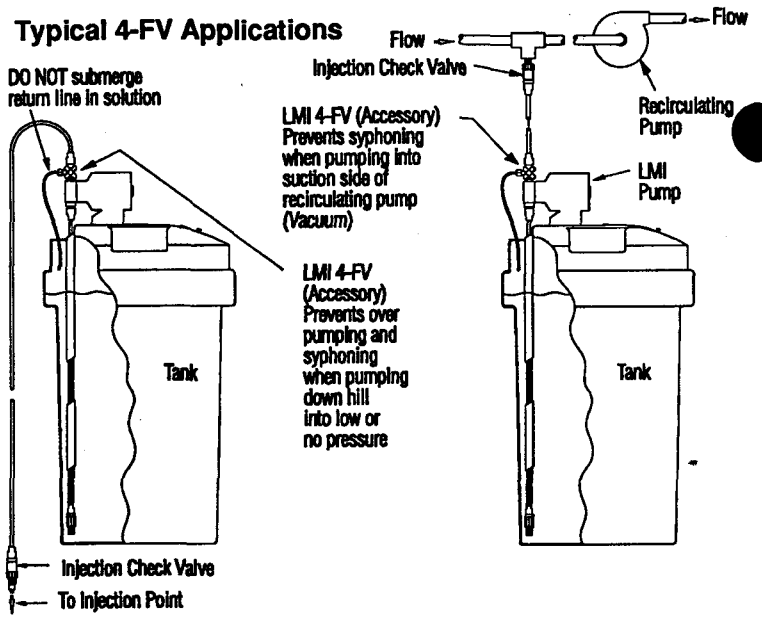

4.5 4-FV Installation

To install the 4-FV, remove the yellow screw cap on the top of the pump head and screw in the 4-FV so that the valve contacts the seal ring. An additional 1/8 - 1/4 turn may be necessary to prevent leakage. **DO NOT OVERTIGHTEN.** Overtightening can cause fittings and seal rings to distort, crack and function improperly.

1/4" O.D. tubing connects to the side of the 4-FV and acts as a return line to the solution tank. This tubing must **NOT** be submerged in the solution.

WARNING: This return line tubing must be secured to insure pumped solution will return to supply tank.

4-FV Tubing Connection

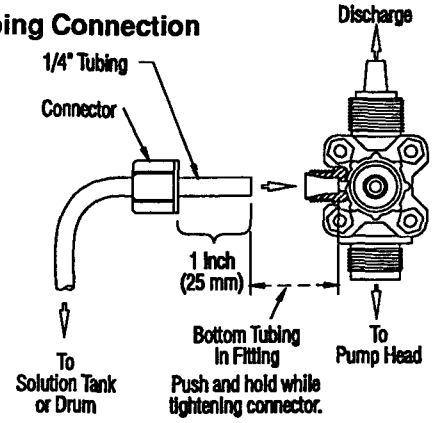

4.6 Foot Valve/Suction Tubing Straightener Installation

The Foot Valve acts as a check valve to keep the pump primed in suction lift applications.

The valve is designed to be submersed in the solution tank or drum and must sit in a vertical position at the bottom. Position approximately 2 inches (50 mm) off the bottom if the tank or drum contains sediment.

The suction tubing straightener, when assembled, positions the foot valve and suction tubing in a vertical position.

1. Attach the foot valve to one end of the suction tubing (see Tubing Connections, section 4.3).
2. Assemble the suction tubing straightener by pushing together alternating yellow and black tubes. Adjust the length of the tubing straightener by pushing tubes further together so when placed over the suction tubing and sitting on the foot valve, approximately 3 inches (75 mm) of tubing exits the tubing straightener on the side to be connected to the pump.
3. Place foot valve, tubing and suction tubing straightener into the solution tank. Check that the foot valve is vertical and approximately 2 inches (50 mm) from the bottom of the tank or drum (see illustration). Connect the other end of the tubing to the suction side of the pump head (bottom side).

Proper Foot Valve Position

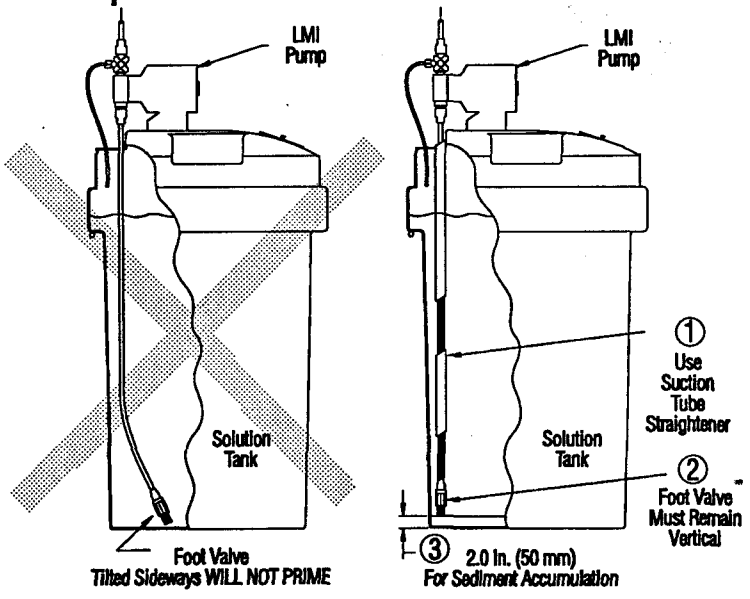

4.7 Injection Check Valve Installation

The Injection Check Valve prevents backflow from a treated line. Connect the Injection Check Valve to your "DISCHARGE" (outlet) line. Any size NPTF fitting or pipe tee with a reducing bushing to 1/2" NPTF will accept the injection check valve. Use Teflon tape or pipe dope to seal the pipe threads only.

When installing the Injection Check Valve, be sure to position it so that the valve enters the bottom of your pipe in a vertical position. Variations left and right within 80° are acceptable. (See illustration below)

After cutting an appropriate length of tubing, connect tubing to the injection check valve then back to the discharge side of the pump head (top side), making sure it does not crimp or come into contact with hot or sharp surfaces.

Typical Injection Check Valve Installations

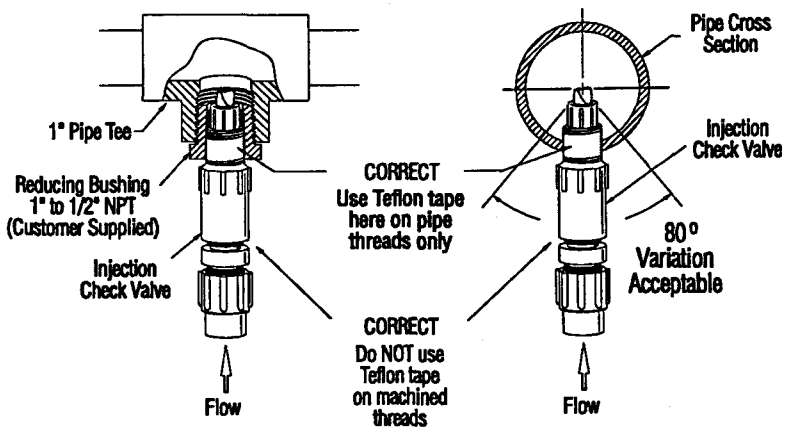

5.0 METHODS OF EXTERNALLY TRIGGERING OR PACING A7, B7, C7 AND D7 PUMPS

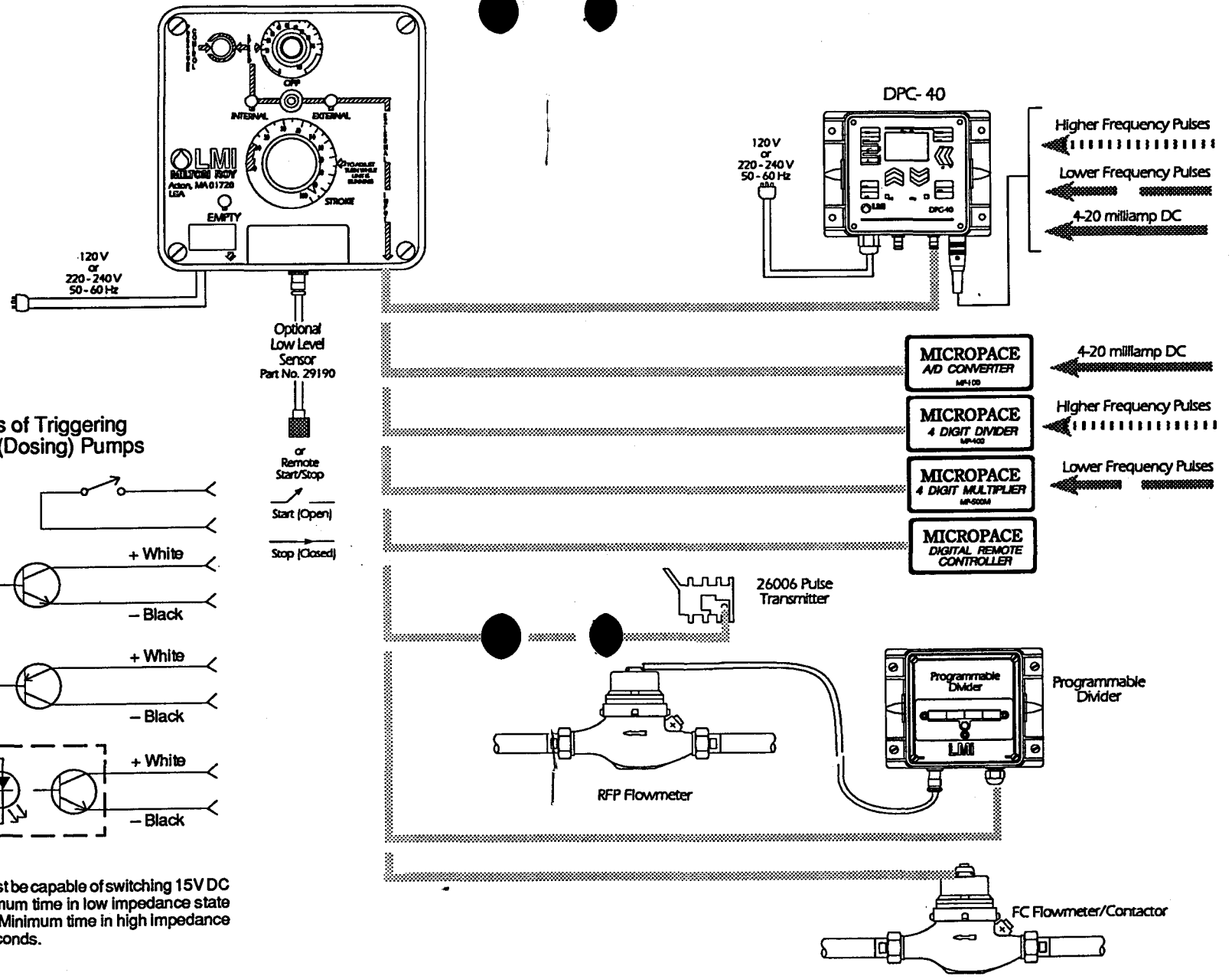

Methods of Triggering Metering (Dosing) Pumps

1. Switch Closure
   Switch closing triggers pump

2. NPN Transistor
   Base goes high to trigger pump
   + White
   – Black

3. PNP Transistor
   Base goes low to trigger pump
   + White
   – Black

4. Opto Isolator
   + White
   – Black

Note:
Switch or transistors must be capable of switching 15V DC at 2 milliamperes. Minimum time in low impedance state (on) is 50 milliseconds. Minimum time in high impedance state (off) is 100 milliseconds.

6.0 START-UP and ADJUSTMENT

NOTE: The pump is normally self-priming if suction lift is 5 ft. (1.5m) or less and the steps below are followed.

NOTE: Pumps are shipped from the factory with water in the pump head to aid in priming.

6.1 Output Adjustment Controls

Note: Manual series pumps controls are not equipped with pressure control.

In most external controlled pumps the uppermost set of knobs on the control panel serve a dual purpose. The smallest of these knobs (inner knob of this concentric knob) is Pressure Control. The larger knob directly underneath is Speed Control. Graduation markings for the small Pressure Control Knob are etched in yellow on the Speed Knob itself. Graduations for the Speed Knob appear directly on the face of the control panel. The largest knob below is Stroke Control.

1. Pressure Control Adjustment: Pressure control provides the adjustment of the pump's pressure capability and power consumption, reducing heat, pipe shock and pulsation while increasing pump life. See Section 7.0 after priming for proper adjustment settings.
2. Speed Adjustment: Speed control provides adjustment of the percent of maximum strokes per minute. Turning this knob clockwise ↻ increases stroke frequency.

   Note A7 Series Only: When operating pump in external mode, the speed control knob should be turned fully counter clockwise ↺. A click indicates pump is in external mode.

   Note A34 and A37 Series Only: Pump comes equipped with a range selector switch which provides high or low speed adjustment. The high setting provides speed adjustments between 8-100 strokes per minute. The low setting provides accurate speed adjustments between 1-12.5 strokes per minute for applications requiring infrequent stroking.
3. Stroke Adjustment: Stroke control provides adjustment of percent of maximum Liquifram® (diaphragm) travel. Turning this knob clockwise ↻ increases percent output per stroke.

6.2 Start-Up/Priming for Pump Supplied with 4-FV

CAUTION: Read this entire section completely before proceeding.

When all precautionary steps have been taken, the pump is mounted, and the tubing is securely attached, you may now start priming the pump.

1. Plug in or switch the pump on.
2. While the pump is running, set the speed knob at 80% and the stroke knob at 100%.

   Note: If the pump is equipped with a pressure control knob, turn knob fully clockwise ↻
3. If your pump is equipped with a 4-FV, grip both the yellow and black knobs, 1/4 turn or pull and hold open.
4. The suction tubing should begin to fill with solution from the tank.
5. A small amount of solution will begin to discharge out the return line of the 4-FV. Once this happens, 1/4 turn or release the knobs and **SHUT THE PUMP OFF.** (If pump is not equipped with an on/off switch, disconnect the power cord.)

6. The pump is now primed.
7. Proceed to output adjustment, Section 6.4.

   NOTE: If the pump does not self-prime, remove the 4-FV on the discharge side of the pump head. Remove the ball and pour water or solution into the port until the head is filled. Replace valve, then follow start up/priming steps.

6.3 Start-Up/Priming without 4-FV

CAUTION: Read this entire section completely before proceeding.

When all precautionary steps have been taken, the pump is mounted, and the tubing is securely attached, you may now prime the pump.

1. Plug in or switch the pump on.
2. While the pump is running, set the speed knob at 80% and the stroke knob at 100%.

   Note: If the pump is equipped with a pressure control knob, turn knob fully clockwise.
3. The suction tubing should begin to fill with solution from the tank.
4. Once the solution begins to exit the pump head on the discharge side, **SHUT THE PUMP OFF.** (If pump is not equipped with an on/off switch, disconnect the power cord).
5. The pump is now primed.
6. Proceed to output adjustment, Section 6.4.

   NOTE: If the pump does not self-prime, remove the fitting on the discharge side of the pump head. Remove the ball and pour water or solution into the port until the head is filled. Replace valve, then follow start up/priming steps.

6.4 Output Adjustment

Once the pump has been primed, an appropriate output adjustment **MUST** be made, Pump output should be calculated and adjustments made accordingly.

TOTAL PUMP OUTPUT

Calculate the total output of the pump as follows:

PUMP OUTPUT = MAX PUMP OUTPUT x %SPEED x %STROKE

Example: A151-192S

Use MAX Output (From dataplate on bottom center of pump control panel) = 24 GPD (24 gallons per day).

If the pump is set at 60% speed and 70% stroke length, the approximate pump output is:

24.0 x 0.60 x 0.70 = 10.08 GPD (gallons per day) Divide by 24 (hours in one day) to calculate in gallons per hour

Note: If pump is not equipped with speed adjustment, calculate by **Max Pump Output x % Stroke** only.

7.0 CALIBRATION

Once installation is complete and the approximate output has been determined, the pump should be calibrated to adjust speed and stroke for your actual desired output.

1. If equipped, make certain Pressure Control Knob is turned fully clockwise
2. Be sure the pump is primed, and discharge tubing and Injection Check Valve are installed as they would be in normal service (i.e., including factors such as injection pressure, fluid viscosity, and suction lift).

3. Place the Foot Valve in a graduated container with a volume of 1000 ml or more.
4. Plug in and switch pump to Internal Mode. Pump until all the air is exhausted from the suction line and head.
5. Turn the pump off. Refill graduated container to a level starting point.

   NOTE: If pump is equipped with pressure control, see Section 7.1 before proceeding.
6. Using a stopwatch or timer, turn the pump on for a measured amount of time (50 pump strokes minimum). The longer the time period, the more confident you can be of the results. Be sure to count the number of strokes during the calibration period when making comparisons.
7. Turn the pump off. Note the time elapsed in relation to volume displaced in the graduate. Now, calculate the output in the time unit you choose (minutes, hours. days, etc.).
8. If the output is too low or too great, adjust speed and or stroke, estimating required correction and repeat steps 1-7.

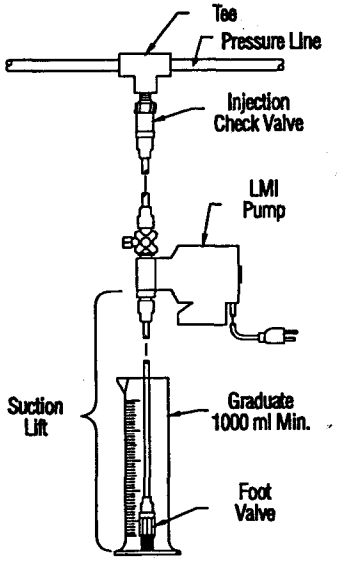

7.1 Pressure Control

Adjust Pressure Control: While unit is running, turn Pressure Control Knob slowly counter-clockwise ↺ until unit just begins to stall. From this stall point, now turn Pressure Control Knob clockwise ↻ from 1 to 1 ½ graduation marks. This is the optimum pressure control setting for your application.

NOTE: Increase setting if back pressure is increased.

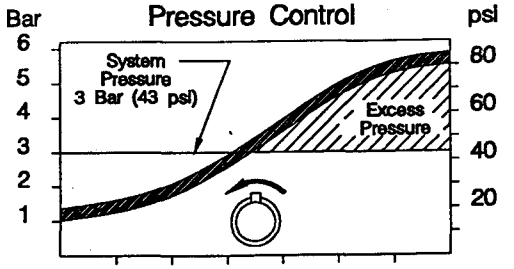

Adjust pressure control to reduce heat, shock, pulsations and prolong pump life.

7.2 Calibration Procedure - On-Site Volumetric Calibration in External Mode

1. Since pump output is governed by an external device such as Flowmeter-Pulser, Liquitron™ Current-to-Frequency Converter or 4-20 mA DC signal from an instrument with an LMI Analog-to Digital Converter, **only the output per stroke may be calibrated.**
2. With pump primed and discharge tubing connected to the injection point as it would be in normal service, place Foot Valve and Strainer Assembly in a graduated container with a volume of 500 ml or more.
3. Switch pump to **Internal** mode with Speed Knob set at 100 until air is exhausted from suction line and pump head.

4. **Adjust Pressure Control** - See Section 7.1.
5. Switch pump **OFF** and note solution level in graduated container. Refill graduate to a starting point.
6. Switch pump **ON** and **count the number of strokes** for exactly one minute. Then switch pump **OFF**.
7. Note volume pumped during the calibration period of one minute. Divide into this the number of strokes to determine the volume of solution pumped per stroke.

   Example: 500 ml in 100 strokes = 5.0 ml per stroke.

   Multiply this by your expected stroke rate per minute, per hour or per day and compare with desired output requirements.
8. Adjust Stroke Length Knob (lower knob) to your best estimate of required correction and repeat calibration procedure.

8.0 SPARE PARTS REPLACEMENTS ROUTINE MAINTENANCE

8.1 Depressurizing the Discharge Line (For Pumps Equipped with a 4-FV only).

WARNING: ALWAYS wear protective clothing, face shield, safety glasses and gloves when performing any maintenance or replacement on your pump.

WARNING: Read steps 1 and 2 below before proceeding.

1. Be sure the Injection Check Valve is properly installed and is operating. If a shut off valve has been installed downstream of the Injection Valve, it should be closed to off.

WARNING: Be sure your relief tubing is connected to your 4-FV and runs back to your solution drum or tank.

2. 1/4 turn or pull on both the yellow and black knobs on the 4-FV. The discharge line is now depressurized. Keep valve open until solution drains back down the discharge tubing into solution drum or tank. Then release or 1/4 turn knobs to normal position.

8.2 Liquifram® (Diaphragm) Replacement

WARNING: ALWAYS wear protective clothing, face shield, safety glasses and gloves when working near or performing any maintenance or replacement on your pump. See MSDS Sheet from solution supplier for additional precautions.

LMI metering pumps are designed for trouble-free operation, yet routine maintenance of elastomeric parts is essential for optimum performance. This involves replacing the Liquifram® seal rings, valve balls, and the Injection Check Valve spring. LMI recommends replacing these parts at least once a year, however, frequency will depend on your particular application.

When replacing the Liquifram®, the valve balls, seal rings and the injection check valve spring should also be replaced. See next section (8.3). A Spare Parts Kit (SP-#) containing these parts may be obtained from your local distributor. (See the Liquid Handling Assembly Sheet for Spare Parts Kit Part Number).

1. Carefully depressurize, drain, and disconnect the discharge line (See Section 8.1 in this manual). Place the Foot Valve into a container of water or other neutralizing solution. Turn the pump on to flush the head assembly. Once the pump head has been flushed, lift the Foot Valve out of the solution and continue to pump air into the pump head until the pump head is purged of water or neutralizing solution.

   Note: If the liquid cannot be pumped due to Liquifram® rupture, using protective gloves, carefully disconnect the suction and discharge tubing. Remove the four screws to the head and immerse the head in water or other neutralizing solution.

2. Start the pump. While running, set the stroke knob to zero and turn the pump off.

   NOTE: See Section 9.0 for proper zeroing.

3. With the unit off, unscrew the Liquifram® by carefully grasping the outer edge of the Liquifram® and turning it counter clockwise ↺. Discard old Liquifram® . Remove the Liquifram® disk if so equipped (located behind the Liquifram®) and check that the size code matches the size code on the replacement Liquifram® (see illustration).

4. Reinstall the disk so the alignment pin on the disk (if present) seats in the recessed hole in the EPU.

⚠ **WARNING:** Take care not to scratch the Teflon face of the new Liquifram® .

For Series B & C

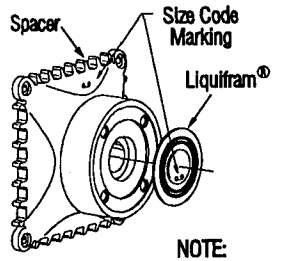

NOTE:
Size code markings for pumps supplied with 6.0 Liquiframs® (diaphragms) should be referenced to the 6.0 Black Adapter not the 3.0 Spacer

For Series A, J, P & Z

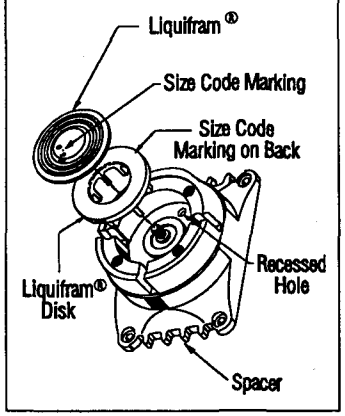

5. Start the pump and turn the stroke knob to the setting indicated below on Stroke Setting Chart which matches the pump model number located on the pump dataplate. With the pump stroking (running), screw on the new Liquifram® clockwise until the center begins to buckle inwards. Stop the pump.

Liquifram® Stroke Setting Chart

Pump Series	Stroke Knob Setting
All A, J, P, Z Series B11, B71, B12, B14, B72, B13, B73, B74 D11, D71, D12, D72, D10, D70 C11, C71, C12, C72, C10, C70, E50, E51, E52	90%
All L Series	85%
C13, C73, C77 D13, D73 E53	70%
D14, D74 C14, C78 E54	50%
All U and M Series	100% but Liquifram® must be bottomed completely. **Do Not Use Straight Edge.**

6. Grasp the outer edge of the Liquifram® and adjust by screwing it in or out so that the center of the Liquifram® is flush with the outside of the spacer edge (see illustration).

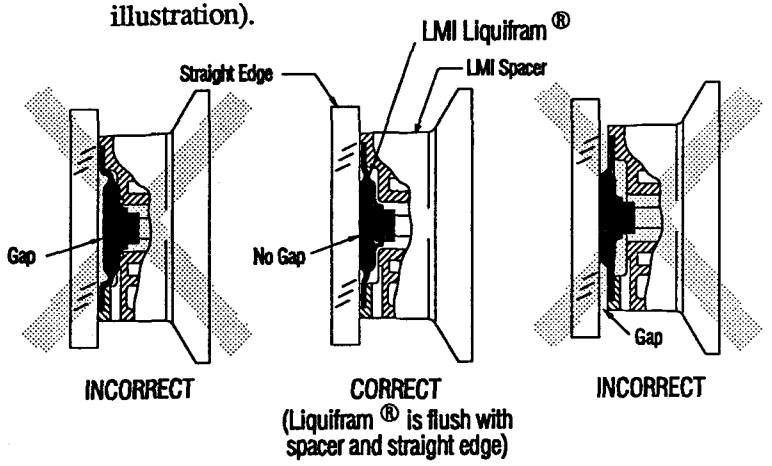

7. Once the Liquifram® is properly positioned, remount the pump head to the spacer using the four (4) screws. Tighten in a crisscross pattern. After one week of operation, recheck the screws and tighten if necessary.

8.3 Seal Ring, Ball and Injection Check Valve Spring Replacement

WARNING: ALWAYS wear protective clothing, face shield, safety glasses and gloves when working on or performing any maintenance or replacement on your pump. See MSDS Sheet from solution supplier for additional precautions.

1. Refer to the Liquid Handling Assembly Sheet included with your pump for the proper Spare Parts Kit number. (SP-#)
2. Carefully depressurize and disconnect the discharge line (See Section 8.1 in this manual). Place the Foot Valve into a container of water or other neutralizing solution. Turn the pump on to flush the head assembly.

Once the pump has been flushed, lift the Foot Valve out and continue to pump to let air into the pump head until pump is purged of water or neutralizing solution.

If the liquid cannot be pumped due to Liquifram® rupture, with protective gloves, carefully disconnect the tubing and four screws to remove the head. Immerse the head in water or other neutralizing solution.

IMPORTANT: Before disassembling valves, note the orientation of seal ring and ball. (See illustration)

3. Carefully disconnect one tubing connection and fitting at a time and remove the worn seal ring and ball.

   Carefully loosen sealing by prying side to side using a small screw driver through the center hole of the seal ring.

4. Install new seal ring and ball in each location. **IMPORTANT:** Note correct orientation.
5. Install the new spring in the Injection Check Valve.

WARNING: Depressurize and drain pipeline (or isolate I.C.V. point using valves) so that I.C.V. can safely be disassembled.

(Refer to Liquid Handling End Sheet for proper assembly orientation.)

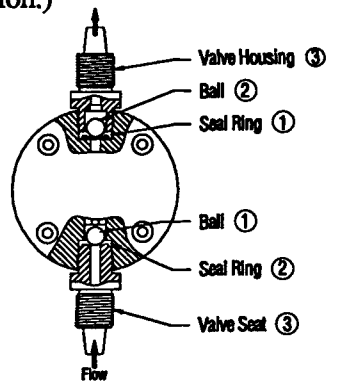

Order of Installation

Note: Order of assembly changes depending on valve location

9.0 CHECKING PUMP FOR PROPER ZEROING (STROKE KNOB)

1. With pump running, turn stroke knob counter clockwise toward zero or end of black or red band.
2. LISTEN to the clicking as the pump is running. The pump should operate quietly at the zero position (no clicking).
3. If the pump continues to click at zero or stops clicking before zero is reached, the pump zero must be reset. (See Section 9.1 or 9.2)

9.1 Type I - Push on Knob

Rezeroing and Stroke Knob Disassembly and Assembly

1. Remove stroke knob from the pump by grasping the knob firmly and pulling it toward you.
2. Pry off the yellow cap.
3. Place the knob on a flat surface.
4. Using needle nose pliers, squeeze the inner section together while lifting the outer section up.
5. Push the inner section back onto the "D" shaped stroke shaft.
6. With the pump running, zero the pump by turning the inner section of the knob counter clockwise until the pump stops clicking.
7. Position the outer section of the knob so that the pointer aligns with zero on the nameplate or end of the black or red band.
8. Push down on the outer section (a snap sound indicates parts are locked together).
9. Replace the yellow cap over the outer section of the knob, aligning the tabs on the cap with the slots inside the knob.

Stroke Knob Assembly (Type I)

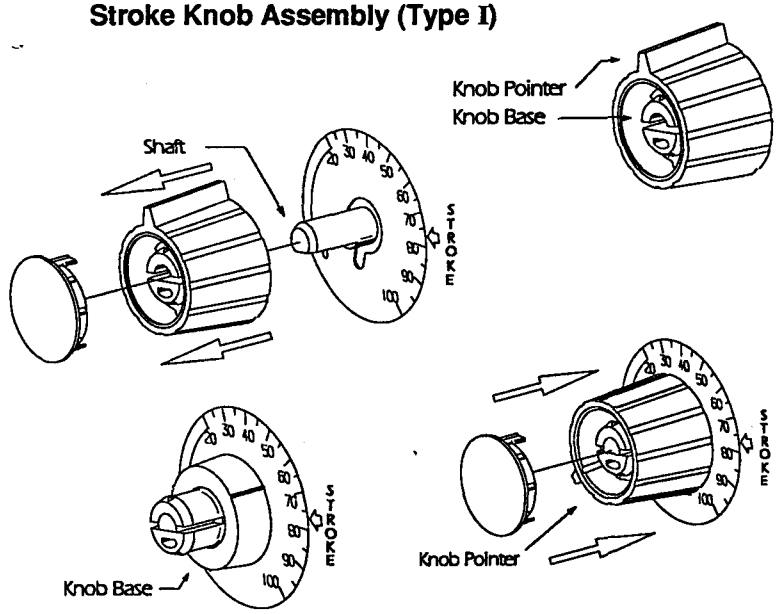

9.2 Type II Collet Knob

Rezeroing and Stroke Knob Disassembly and Assembly

1. Remove Yellow Cap.
2. Hold knob with soft jaw pliers.
3. Disconnect knob by loosening 5/16" (8 mm) collet nut. There is no need to remove nut.
4. Remove knob by pulling towards you.
5. With pump running, zero the pump using a screw driver to turn the stroke shaft counter-clockwise ↺ until the pump just stops clicking.
6. Pump is now zeroed.
7. Position knob at zero, or the end of the low range band, and tighten 5/16" (8 mm) collet nut).
8. Replace yellow cap.

10.0 TROUBLESHOOTING

PROBLEM	POSSIBLE CAUSE	SOLUTION
Pump Will Not Prime	1. Pump not turned on or plugged in.	1. Turn on pump/plug in pump.
	2. Output dials not set properly.	2. Always prime pump with speed at 80% and stroke at 100%.
	3. Foot Valve not in vertical position on bottom of tank.	3. Foot Valve must be vertical (See Foot Valve Installation, Section 4.6).
	4. Pump suction lift too high.	4. Maximum suction lift is 5 ft. (1.5 m) Pumps with High Viscosity Liquid Handling Assemblies require flooded suction.
	5. Suction tubing is curved or coiled in tank	5. Suction tubing must be vertical. Use LMI tubing straightener supplied with pump. (See Section 4.6)
	6. Fittings are over tightened.	6. *Do not overtighten fittings.* This causes seal rings to distort and not seat properly which causes pump to leak back or lose prime.
	7. Air trap in suction valve tubing.	7. Suction tubing should be as vertical as possible. AVOID FALSE FLOODED SUCTION! (See Section 4.2A)
	8. Too much pressure at discharge. (Pumps without 4-FV)	8. Shut off valves in pressurized line. Disconnect tubing at injection check valve (See priming Section 6.0). When pump is primed, reconnect discharge tubing.
Pump Loses Prime	1. Solution container ran dry	1. Refill container with solution and reprime (See Section 6.0)
	2. Foot Valve is not in a vertical position on the bottom of the tank.	2. Foot Valve must be vertical (See Foot Valve Installation, Section 4.6).
	3. Pump suction lift is too high.	3. Maximum suction lift is 5 ft. (1.5 m). Pumps with High Viscosity Liquid Handling Assemblies require flooded suction.
	4. Suction tubing is curved or coiled in tank.	4. Suction tubing must be vertical. Use LMI tubing straightener supplied with pump. (See Section 4.6)
	5. Fittings are overtightened.	5. Do not overtighten fittings. This causes seal rings to distort and not seat properly which caused pump to leak back or lose prime.
	6. Air trap in suction valve tubing.	6. Suction tubing should be as vertical as possible. AVOID FALSE FLOODED SUCTION! (See Section 4.2A)
	7. Air leak on suction side.	7. Check for pinholes, cracks. Replace if necessary.

TROUBLESHOOTING (continued)

PROBLEM	POSSIBLE CAUSE	SOLUTION
Leakage at tubing	1. Worn tubing ends.	1. Cut tubing about 1 inch (25 mm) off tubing and then replace as before.
	2. Loose or cracked fitting.	2. Replace fitting if cracked. Carefully hand tighten fittings. Do not use pipe wrench. Once fitting comes into contact with seal ring, tighten an additional 1/8 or 1/4 turn.
	3. Worn seal rings.	3. Replace balls and seal rings. (See Section 8.3) Spare Parts (SP-#)
	4. Solution attacking Liquid Handling Assembly material.	4. Consult LMI or your local distributor for alternate materials.
Low Output or Failure to Pump Against Pressure	1. Pump's maximum pressure rating is exceeded by injection pressure.	1. Injection pressure cannot exceed pump's maximum pressure. See pump data plate.
	2. Worn Seal Rings.	2. Worn seal rings may need replacement. (See Section 8.3) Spare Parts (SP-#)
	3. Ruptured Liquifram®.	3. Replace Liquifram®. (See Section 8.2)
	4. Incorrect stroke length.	4. Check zero on pump/Re-zero pump. (See Section 9.0)
	5. Tubing run on discharge may be too long.	5. Longer tubing runs may create frictional losses sufficient to reduce pump's pressure rating. Consult factory for more information.
	6. Clogged footvalve strainer.	6. Remove footvalve strainer when pumping slurries or when solution particles cause strainer to clog.
Failure to Run	1. Pump not turned on or plugged in.	1. Turn on or plug in pump.
	2. EPU failure.	2. Disassemble pump and measure the resistance of the EPU across the EPU wires. Resistance reading should be in accordance to the table (See Section 11.0). Also check EPU leads to ground. Consult supplier or factory.
	3. Pulser failure.	3. The pulser should be replaced if EPU checks out OK. Consult supplier or factory.
Excessive Pump Output	1. Syphoning. (Pumping downhill without a 4-FV).	1. Move injection point to a pressurized location or install an LMI 4-FV. (See Section 4.4)
	2. Little or no pressure at injection point.	2. If pressure at injection point is less than 25 psi, an LMI 4-FV should be installed. (See Section 4.4)
	3. Excessive strokes per minute.	3. Replace pulser or resistor. Consult factory.

11.0 EPU RESISTANCE CHART

Pump Series	Voltage	Coil Resistance (Ohms) * @ 20°C (68° F)
A14, A15, A16, A34, A74, A75, A76 A94, A95, A96 J02, J03, J04 , J05, J06 J13, J15, J16 PW4, PW5, PW6 P04, P05, P06 P14, P15, P16 U01, U02, U03	115 VAC 230 VAC	76 - 87 307 - 353
A17, A37, A77, A97, A18, A78 Z14, Z15 P02, P03 P12, P13	115 VAC 230 VAC	152 - 176 583 - 671
J54D, J55D, J56D	12 VDC	1.1 - 1.3
D10, D11, D12, D13, D14 D70, D71, D72, D73, D74 E50, E51, E52, E53, E54	115 VAC 230 VAC	25.7-29.6 97 - 112
B11, B12, B13, B14 B71, B72, B73, B74	115 VAC 230 VAC	43 - 49 167 - 193
C10, C11, C12, C13, C14 C70, C71, C72, C73, C74	115 VAC 230 VAC	22.8 - 26.2 91 - 105
C77, C78	115 VAC 230 VAC	14.4 - 16.6 57.7 - 66.3

* EPU checked within 10 hours of operation can increase coil resistance reading as much as 20%

WALCHEM

WALCHEM CORPORATION
5 Boynton Road
Hopping Brook Park
Holliston, MA 01746 USA
TEL: 508-429-1110
FAX: 508-429-8737

MICROPACE®

Electronic Metering Pump Control Modules
INSTRUCTIONS • INSTALLATION

• MP-100 Analog to Digital Converter
• MP-400D Pulse Divider • MP-500M Pulse Multiplier

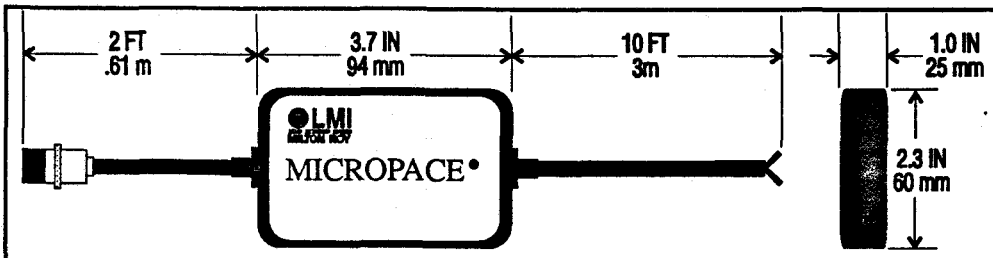

Power Supply:
15 VDC, Supplied by LMI pump
Ambient Temperature:
0°F to 140°F
(-20°C to 60°C)
Enclosure:
Splash & dust proof, IP-65 rated

Specifications and dimensions shown above are typical for all models.

MP-100 Analog to Digital Converter

Input Signal Source: 4-20 mA (isolated) only.
Max Input Voltage: 42VDC
Impedance: 100 Ohms

INSTALLATION

1. Disconnect signal source supply voltage prior to connecting your MP-100. Failure to do so may damage the MP-100 circuit.

2. Insert the 4-pin connector into the socket on your LMI Series A7, B7 or C7 Metering Pump. The socket is located on the bottom right under the pump control panel.

3. Connect the other end of the cable to your input signal source. Polarity is: white = positive(+); black = negative (-).

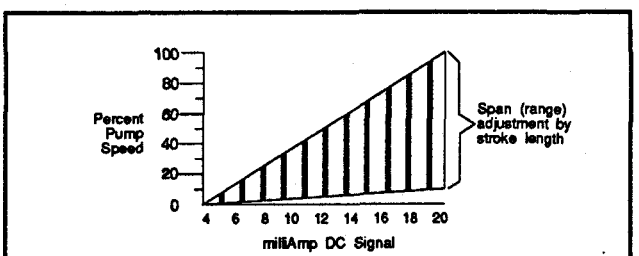

MP-100 Adjustment Range

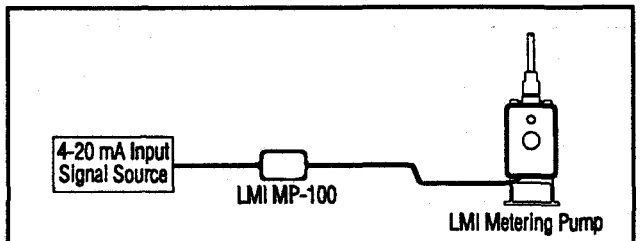

MP-100 Typical Installation

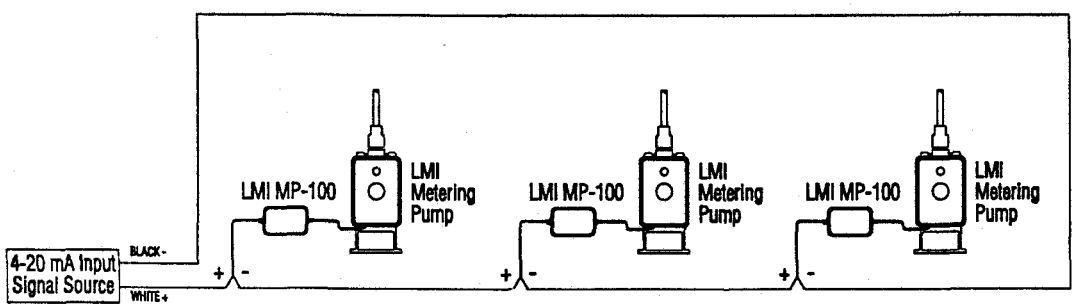

MP-100 Series Loop Control

WALCHEM CORPORATION
5 Boynton Road
Hopping Brook Park
Holliston, MA 01746-1446 USA
TEL: 508-429-1110
FAX: 508-429-7433

1631.A 7/92

MP-400D Pulse Divider (Counter)
MP-500M Pulse Multiplier (Batch Signal Converter)

Switch Input (MP-400D & MP-500M):
A. 'On' Resistance: 5K ohms max.
B. 'Off' Resistance: 100K ohms min.
Min. switch closure time (MP-400D & MP-500M)
low impedance state (on): 10 milliseconds
Min. switch opening time (MP-400D & MP-500M)
high impedance state (off): 20 milliseconds
Max. count speed or frequency (MP-400D):
1800 pulses per minute (30Hz)

Max. batch count or multiplier (MP-500M): 1023 pulses
Pulse output rate or speed (MP-500M): fixed, 100 ±2 pulses per minute

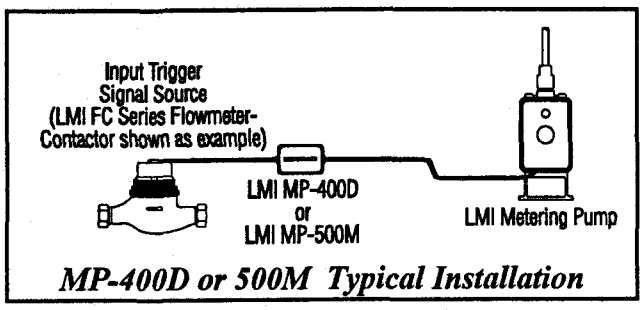

MP-400D or 500M Typical Installation

INSTALLATION

1. The MP-400D and MP-500M Signal Converters may be preset before connection to the pump or signal source, or may also be adjusted after connection.

2. Open the MP-400D or MP-500M cover by removing the four screws that hold the back cover on.

3. Follow the instructions inside the cover to set your Signal Converter. Use a pencil or ball point pen to slide the switches.

4. Replace the cover and the four screws.

5. Insert the 4-pin connector into the socket on your LMI Series A7, B7 or C7 Metering Pump. The socket is located on the bottom right under the pump control panel.

6. Connect the other cable to your input signal source.
Polarity is: white = positive(+); black = negative (-).

7. Switch your pump to EXTERNAL. The count, division or multiplication will begin immediately. Switching the pump to OFF or unplugging the pump will reset the count.

METHODS OF TRIGGERING MP-400 AND MP-500M

1. Switch closure
switch closing trigger

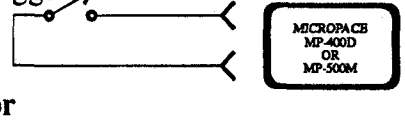

2. NPN Transistor
Base goes high

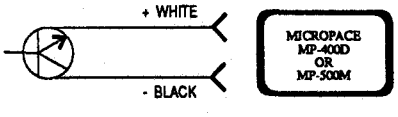

3. PNP Transistor
Base goes low

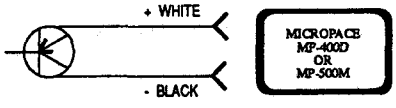

4. Opto Isolator

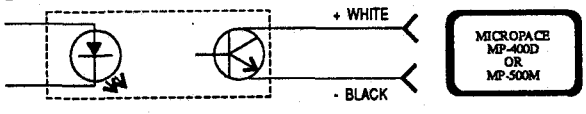

NOTE: *Switch or transistors must be capable of switching 2 milliamperes @ 15V DC . Combining additional* **MICROPACE®** *units will increase the milliampere demand.*

APPENDIX E
INCLINED PLATE SEPARATOR

Manufacturer: Hoffland Environmental
(Altantes Chemical Systems, Inc.)
303 Silver Spring Road
Controe, TX 77303
(409) 856-4515 Fax: (409) 856-4389

Supplier: TES Technologies
427 S. Church Street
Moorestown, NJ 08057-2760
(609) 234-1730 Fax: (609) 273-4387
Contact: Doug Haugen

Model: 110/60/SA (25 gpm)

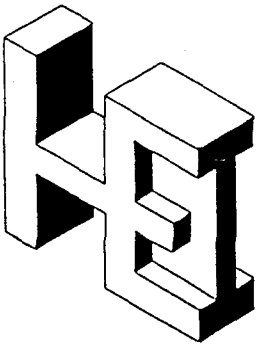

OPERATIONS
AND
MAINTENANCE

MANUAL

FOR

HEI MODEL: 110/60/SA CLARIFIER
WITH FLASH MIX AND FLOCCULATION

FOR

TES TECHNOLOGIES

TET06

TABLE OF CONTENTS

SECTION	DESCRIPTION	PAGE
1.0	Installation	1
2.0	Operation of Clarifier	2-3
3.0	Maintenance	4
3.1	Safety	5
4.0	Operation Checklist	5
5.0	Underflow Adjustments	6
6.0	Equipment List	7
6.1	Rake Drive Parts List (OPTIONAL)	7-8
6.2	Spare Parts List	8
7.0	Troubleshooting	9
8.0	Manufacturer's Section	

SECTION 1.0 INSTALLATION

1. After erecting the clarifier, it must be leveled in both directions. If the unit is unlevel the flow distribution will be uneven, thus reducing the clarifier efficiency.

   A good method to acquire perfect leveling is to install a temporary blind flange on the effluent pipe. After installation on the flange, fill the overflow with water. At this time the clarifier can be leveled with respect to the flow distribution holes

   After leveling, remove the blind flange and proceed with piping.

2. Before operating, check for any possible areas where aeration or oil contamination may occur. If such a problem exists, it must be eliminated before operation of the clarifier.

3. Check and adjust the influent rate so it will not exceed the design rate of the clarifier.

4. Approximate sludge discharge from the clarifier should be determined to set up the initial sludge removal system. This can be done accurately after the unit is in operation but can be approximated for start-up by using the following data:

   $$\frac{SS_i}{SS_u} \times I \text{ (gpm)} = U_r \text{ (gpm)}$$

   Concentration of suspended solids in the influent divided by the predicted underflow concentration times the influent rate (gpm) equals the underflow rate in gpm.

5. Fill the clarifier with clear water to check for leaking. (All HEI units are hydrostatically tested at the factory). Also the clarifier should be filled to equalize the flow distribution and abate temporary abnormal flow characteristics.

If there are any problems or questions, please call Hoffland Environmental at (409) 856-4515.

SECTION 2.0 OPERATION OF CLARIFIER

FLOCCULATION

Steps have been taken previous to this stage to convert soluble toxic components into minute insoluble suspended particles. These particles have a specific gravity close to that of water. By utilizing an organic polyelectrolyte, these particles agglomerate prior to entering the clarifier.

A specifically designed flash mix chamber provides turbulent mixing action to rapidly disperse the concentrated polyelectrolyte. The flash mix chamber is proceeded by the flocculation chamber, which provides gentle agitation with minimal turbulence. The flocculation chamber establishes optimum conditions for particle agglomeration prior to entering the clarifier.

The agglomerated masses are not subjected to turbulent conditions after formation in the flocculation chamber. When the waste stream carrying the suspended floc exits the flocculation chamber, it travels directly into the mid zone of the clarifier. Once entering the clarifier, the influent will be evenly distrubuted into the plate packs onto which the floc will settle. After enough material has settled on the plate packs, the combined mass of the floc causes a movement to the sludge holding section of the clarifier.

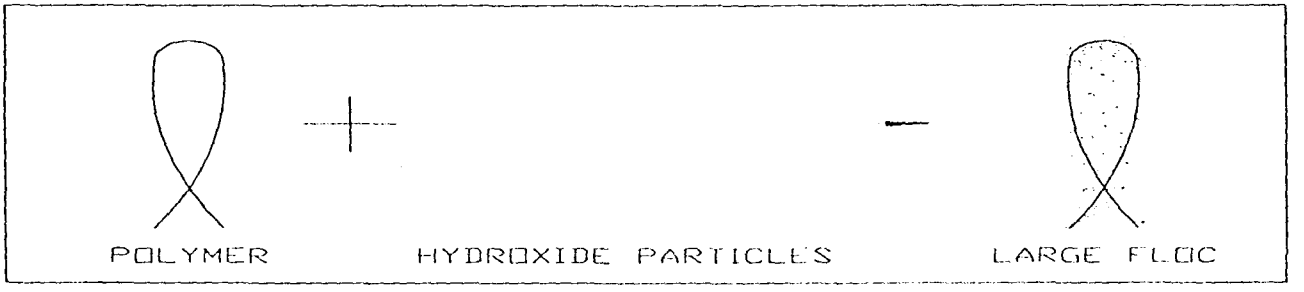

Note: Flocculation can be enhanced by a higher suspended solids content. This may be increased by returning a portion of the sludge to the flocculation section. This is commonly referred to as "seeding". To incorporate seeding into your system, please contact Hoffland Environmental.

SEVERAL FACTORS WHICH EFFECT SETTLING:

a) Excess sulfide addition.

b) Too low pH - anionic polymers lose their charge at low pH and flocculation is not effective. Example - Ferrous sulfate is more soluble at low pH, limiting coprecipitation.

c) Too high pH - effect in this area is more of a problem in the regulatory guidelines. However, some heavy metals become soluble at high pH.

d) Excessive flow rate - floc will not agglomerate to a mass of sufficient density to settle. Flocculation process is cut short and essentially, the proportion of polymer to wastewater is decreased, creating an inadequate polymer supply. Simultaneously, th velocity through the slanted plates is increased, therefore smaller (lighter) particles trying to settle in less time under excessive flow conditions.

SLANT PLATE CLARIFIER

The slant plate clarifier is designed to provide an influent velocity low enough to permit flocculated particles adequate time to settle on the slanted plate.

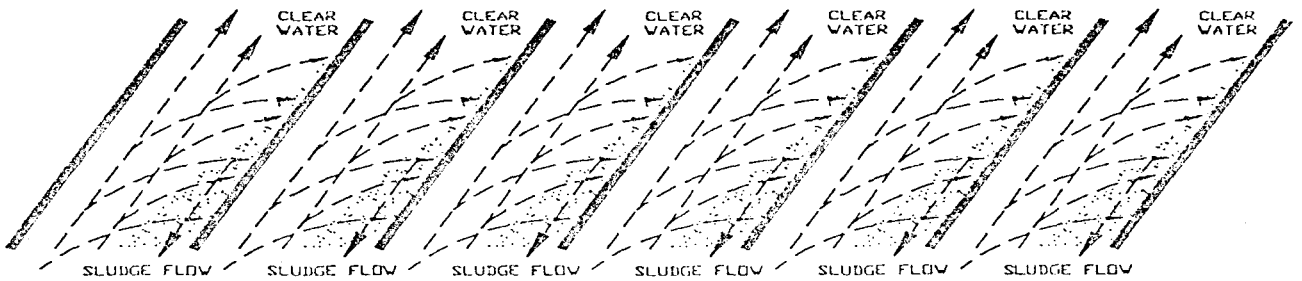

The slant plate clarifier relies on a mass movement differential, where the area on which the particles settle is the separation distance between the plates, and therefore makes the slant plate clarifier more efficient.

SECTION 3.0 MAINTENANCE

CLARIFIER

The HEI Clarifier will operate with little more than preventative maintenance, meaning: KEEP IT CLEAN.

1. There is the possibility of floating sludge accumulation in the sections between the plate packs (This space is not present in some larger model clarifiers). A small amount of this is normal and should be skimmed off after forming a layer. If this occurs often, there may be air or oil becoming entrained in the floc. Should this be the case, the source of the contamination must be found if the clarifier is to operate properly.

2. The weirs should be kept clean of trailing floc. The flow distribution holes can be blinded if the weirs are not cleaned. This will cause uneven flow characteristics which will upset the efficiency of the clarifier.

3. Every 6 months to 1 year empty the clarifier and observe the lamella plates, if they have no apparent damage or build-up of sludge on them, refill and begin operation. It would be a rarity for there to be any damage to the slant plates, but it is necessary to check. Note: A scale build-up of material can make the sludge stick to the plates instead of sliding into the sludge storage area.

4. If the sludge pump is not run enough, there is the possibility of a sludge accumulation to a level where the plates are blinded. This will cause floc to travel through the plate packs, over the weirs, and into the effluent. A clarifier failure of this type can be eliminated by simply increasing the operating time of the sludge pump(s).

SECTION 3.1 SAFETY

All maintenance must be conducted in a fashion which abides to the standards in the United States Department of Labor Occupational Safety and Health Administration manual.

SECTION 4.0 CHECKLIST

START-UP:

1. Verify that the clarifier has been installed according to the assembly drawings.
2. Check the speed reducer for proper lubrication.
3. Activate the chemical feed system and transfer pumps to treatment system.
4. Start the sludge pump.
5. Adjust the underflow rate. (Reference Section 5.0)
6. Verify that the water clarity from the clarifier is acceptable.

SHUT DOWN:

1. Deactivate the chemical system and transfer pumps to the treatment system.
2. Stop the sludge pump after removing excess sludge from the cone.
3. For complete shut-down, empty the water from the clarifier. After the clarifier is empty, wash the sludge from the slant plates and sludge storage area with a hose.

SECTION 5.0 UNDERFLOW ADJUSTMENTS

During normal operation of the clarifier, remove a 1000 ml sample of waste water from the flocculation tank in a graduated beaker. Immediately place the sample beaker on a flat surface and begin timing for 15 minutes (approximate retention time of the clarifier). At the end of 15 minutes observe the amount of sludge (not water) in milliliters contained in the sample. Now apply the data collected to this equation.

$$\frac{\textit{ml of sludge}}{\textit{ml of sample}} \times 100 = \textit{percent sludge}$$

$$\frac{\textit{percent sludge}}{100} \times \textit{total flow (gpm)} = \textit{percent underflow (gpm)}$$

The sludge pump should be adjusted for this removal rate.

NOTE: To use this formula with multiple clarifier systems, divide the gpm of underflow by the number of clarifiers in service.

SECTION 6.0 EQUIPMENT LIST

QTY. *DESCRIPTION*

1 FLASH MIXER
Sumitomo model VM 3085, 29/1 ratio, 1/3 HP, 240 V
1 phase TEFC motor.
Subassembly:
2 @ Lovejoy L095-3/4" coupling
1 @ Lovejoy L095-S spyder
1 @ PTC F3-U212N flanged bearing

1 FLOCCULATION MIXER
Sumitomo model VM 2002-3090, 59/1 ratio, 1/4 HP, 240 V
1 phase motor. With LENZE variable speed drive to fit Sumitomo Motor.
Subassembly:
1 @ Lovejoy L095-3/4" coupling
1 @ Lovejoy L095-1 1/8" coupling
1 @ Lovejoy L095-S spyder
1 @ PTC F3-U212N flanged bearing

SECTION 6.1 RAKE DRIVE PARTS LIST (OPTIONAL)

CLARIFIER MODELS PARTS

110/60/MA
220/60/MB
440/60/MC
Sumitomo Model VM3105/08, 5133:1 ratio
1/8 HP, 480 V, 3 Phase TEFC Motor.
Subassembly:
1) Martin 6018 - 2" coupling
1) Martin 6018 - 1 1/8" coupling
1) Martin 6018 - chain
1) Martin 6018 - chain cover
1) PTC Bearing - F3-U232N

150/60/MA
300/60/MB
600/60/MC
Sumitomo Model VM3115/09, 5133:1 ratio
1/8 HP, 490 V, 3 phase TEFC Motor.
Subassembly:
1) Martin 6018 - 2" coupling
1) Martin 6018 - 1½" coupling
1) Martin 6018 - chain
1) Martin 6018 - chain cover
1) PTC Bearing - F3-U232N

800/60/MC
Sumitomo Model VM 3145/10, 6177:1 ratio
¼ HP, 480 V, 3 phase TEFC Motor.
Subassembly:
1) Martin 6018 - 2" coupling
1) Martin 6018 - 1 7/8" coupling
1) Martin 6018 - chain
1) Martin 6018 - chain cover
1) PTC Bearing - F3-U232N

250/60/MA Sumitomo Model VM 3155/09, 7569:1 ratio
500/60/MB ¼ HP, 480 V, 3 phase TEFC Motor.
1000/60/MC Subassembly:
1) Martin 6018 - 2" coupling
1) Martin 6018 - 1 7/8" coupling
1) Martin 6018 - chain
1) Martin 6018 - chain cover
1) PTC Bearing - F3-U232N

Special Appl. Sumitomo Model VM 3165/11, 7569:1 ratio
½ HP, 480 V, 3 phase TEFC Motor.
Subassembly:
1) Martin 6018 - 2" coupling
1) Martin 6018 - 2¼" coupling
1) Martin 6018 - chain
1) Martin 6018 - chain cover
1) PTC Bearing - F3-U232N

1000/60/MB Sumitomo Model VM 3175/11, 7569:1 ratio
2000/60/MC ½ HP, 480 V, 3 phase TEFC Motor.
Subassembly:
1) Martin 6022 - 2" coupling (Plain Bore)
1) Martin 6022 - 2 3/4" coupling
1) Martin 6022 - chain
1) Martin 6022 - chain cover
1) PTC Bearing - F3-U232N - 2"
2900/60/MC Sumitomo Model VM 3190/11, 7569:1 ratio
1 HP, 480 V, 3 phase TEFC Motor
Subassembly:
1) Martin 10018 - 3 5/8" coupling (Shop to Bore)
1) Martin 10018 - 2 15/16" coupling
1) Martin 10018 - chain
1) Martin 10018 - chain cover
1) PTC Bearing - F247 -2 15/16"

SECTION 6.2 SPARE PARTS LIST

1 Flash Mixer Drive

1 Floc Mixer Drive

1 Rake Drive

1 Lovejoy L095 3/4" coupling

1 Lovejoy L095 1 1/8" coupling

1 Martin 6018 2" coupling

1 Martin 6018 1 1/2" coupling

SECTION 7.0

TROUBLESHOOTING

High Sludge Level in Clarifier

1.BA

Failure in clarifier blow-down system.

Is there flow to the sludge thickener? If yes, go to the Increased Sludge Levels Section below.

Valve, timer, or pump failure.

Check for pump failure, (flow operation, etc.) Check any automatic valves for proper operation. Check automatic cycle controls (timers, alternators, etc.).

Repair or replace faulty valve timer, or pump. Correct wiring.

Clogged lines to the sludge thickener.

Particularly after the unit has been out of operation for some time, the lines can get clogged with heavy sludge. Flush with water or blow out with air.

Flush Clogged lines.

Increased sludge levels

Increased loading of incoming waste.

This could be an indication of leaks, or of excessive carryover in process tanks. While not a waste treatment problem, per say, you will probably want to find and correct the problem before it gets worse.

Repair any leaking process tanks and check for cause of increased carryover (dragout).

Alternatively, the problem could result from increased production or a change in process conditions.

A permanent production change may require revised settings for clarifier underflow, of for other process parameters. Contact HEI.

Excessive addition of inorganic flocculant.

Check flow rates of flocculant and surge tank pump. (A low flow rate from the surge tank is the same as a high rate in the flocculant pump.

Correct flow rates.

Failure or faulty operation of sludge dewatering equipment

Failure to operate press.

Check for frequent operation.

Regardless of quantity of sludge, press must be operated enough to keep sludge at an acceptable level.

Failure to empty press.

Check pressure; pump can not work against an identical back pressure.

Empty more frequently.

Valve or timer.

Check operation of valves at base of clarifier cone. See filter press operation section.

Contact HEI for timer failure. Repair or replace air solenoid or air-control valve.

Ratholing.

Check the consistency of the sludge to press, it will be thick when first pumped, then very thin after a period of time. This indicates ratholing.

Contact HEI for recommendations to eliminate ratholing.

Pump Failure.

Refer to manufacturer's information about the sludge pump (not included in this manual).

Poor Setting in Clarifier

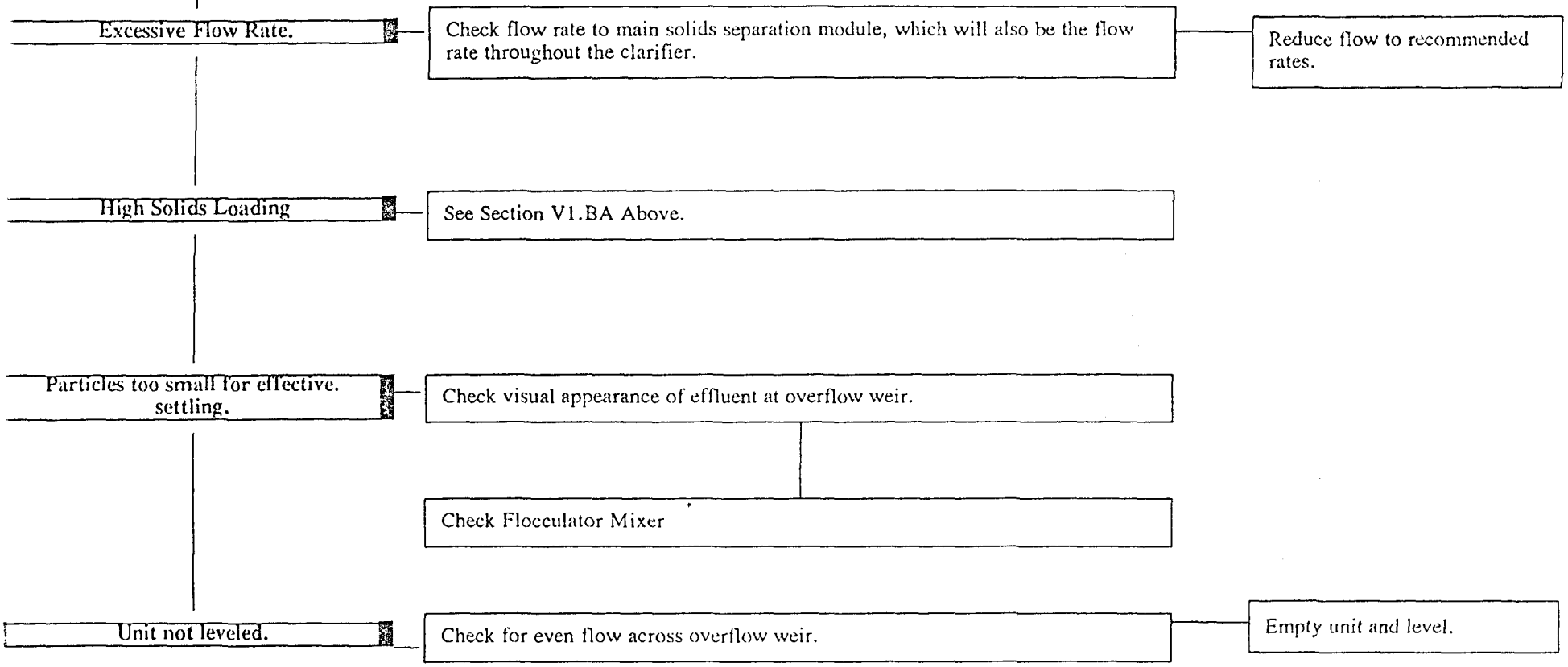

SUMITOMO
MACHINERY CORPORATION OF AMERICA

SM-CYCLO® GEARMOTORS
Operating and Maintenance Manual

3000 Series

KOELLING & ASSOCIATES, INC.
13403 Northwest Freeway
Suite 150
Houston, TX 77040
713/462-6060,
Your SM-CYCLO® Representative

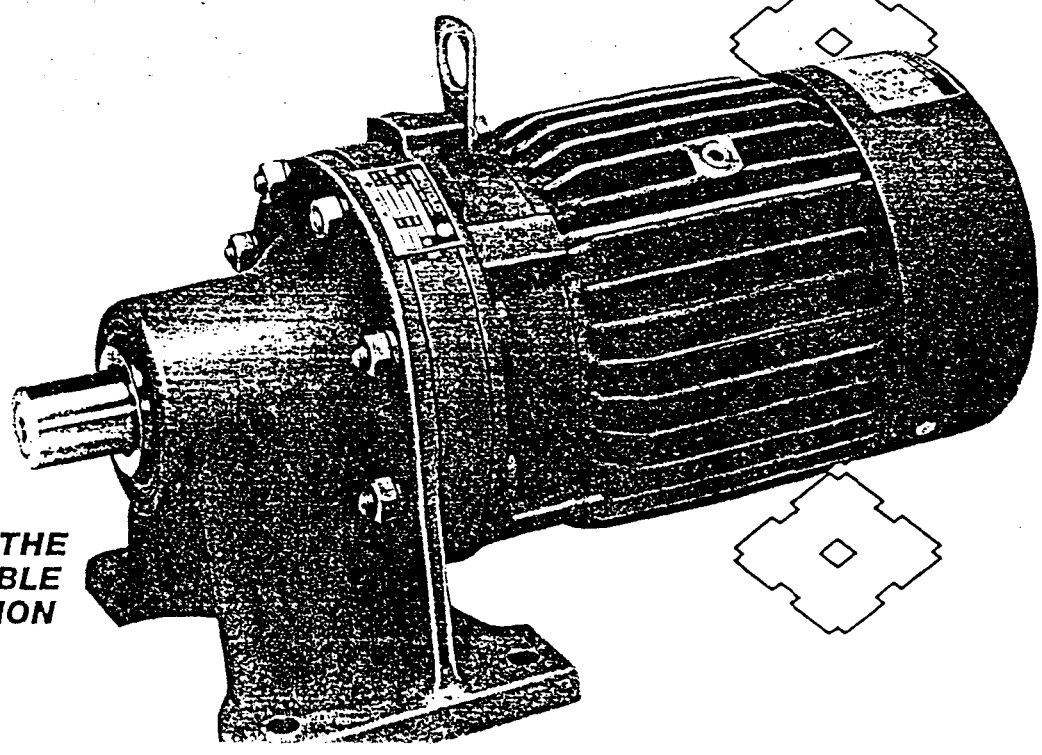

THE AVAILABLE SOLUTION

Index

Mounting of Gearmotor 2
General Construction 3, 4
SM-CYCLO® Reducer 5
Lubrication 5
Grease 5
Designated Grease 6
Grease Replenishment & Change 6
Quantities of Grease 6
Oil Units 7
Forced Lubrication for Vertical Units 7
Types of Lubrication Oils 8
Allowable Oil Viscosities 8
Oil Quantities 8
Oil Change 8
Oil Fill Procedures 8
Oil Level Dimensions 9
Bearings, Oil Seals & Gaskets 10
SM-CYCLO Motor 12
General Construction 13
General Inspection of Motor 14
Pre-Start Up Inspection 14
Wiring Grounding, Insulating Resistance 14
Preparation and Start-Up 14
Bearings, Oil Seals for Motor 15
Designated Grease 15
Intervals and Quantities of Grease 15
Grease Replenishment Procedure 15
Oil Seals 15
Single Lip Type, Slinger Type 15
Bearing and Oil Seal Sizes 16, 17
General Information 17
SM-CYCLO Gearmotor 18
Disassembly/Assembly 18, 19
Trouble-Shooting-Reducer 20
Trouble-Shooting-Motor 21
Gearmotor Maintenance and Inspection 22
Daily/Periodic
Ordering Correct Replacement Parts 22
Storage and Operation After Storage 23

Mounting

1. Mounting on Exact Planes

The Horizontal Type oil-lubricated units must be mounted on horizontal surfaces. Where they are mounted on inclined surfaces, some modifications may be necessary. Specify mounting plane inclination at time of ordering.

2. Accurate Alignment

Where the gearmotor is connected to the driven machine through coupling, align the shafts accurately. Where the gearmotor is connected through V pulleys or sprockets, insure that the belts or chains are neither too tight nor too slack.

3. Overhung Load Positions

Overhung loads should be located as close to the bearing as possible. (See the Catalog page 16.)

4. Foundations

Foundations must be rugged enough to withstand shock and stress applied from the load side through the gearmotor.

5. Secure Housing

Where the reduction units are operated under conditions of vibration and/or frequent starts and stops, it is recommended to secure them on their mounting surfaces by inserting dowel pins into the knock-holes provided on the foot of the casing. This will insure that bending or shearing forces are reduced on the mounting bolts. Pins must be securely inserted, particularly when the units are to be operated under conditions of severe recurrent peak loads.

6. Mounting Accessibility

The reduction units must be mounted on places with easy accessiblity for lubrication maintenance purposes and ease of inspection.

7. Ventilation

Avoid installation in places where the humidity is high, dust is considerable, or where the gearmotor will be in contact with water or oil. Select a clean, dry location with good ventilation.

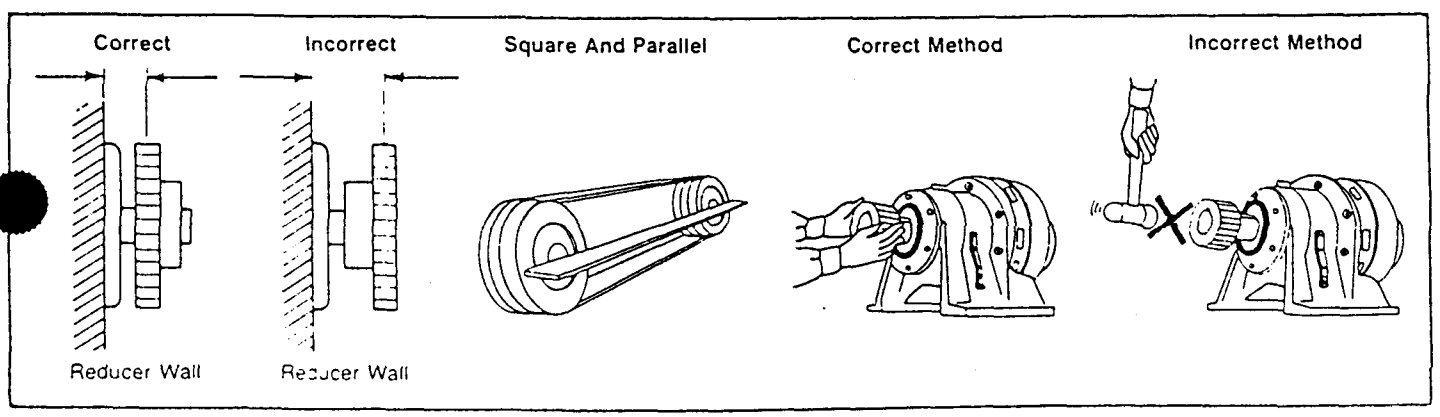

General Construction

Fig. 1 Single Reduction (Horizontal Foot Mount)

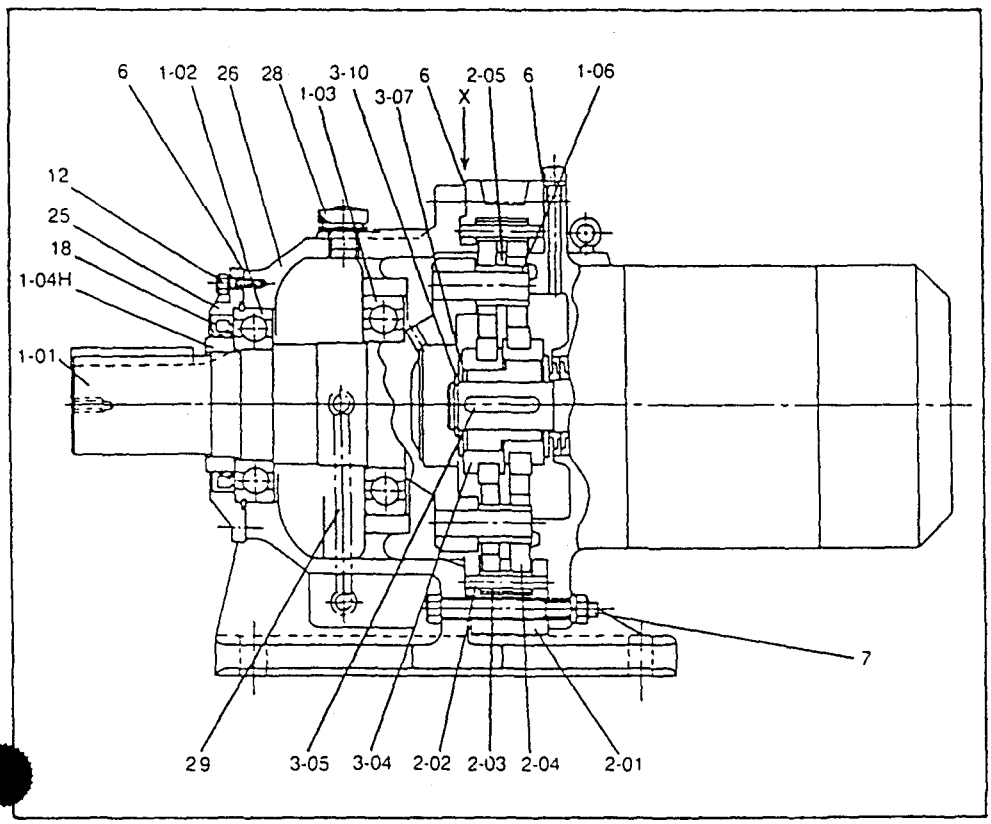

Fig. 2 Single Reduction (Vertical Base Mount)

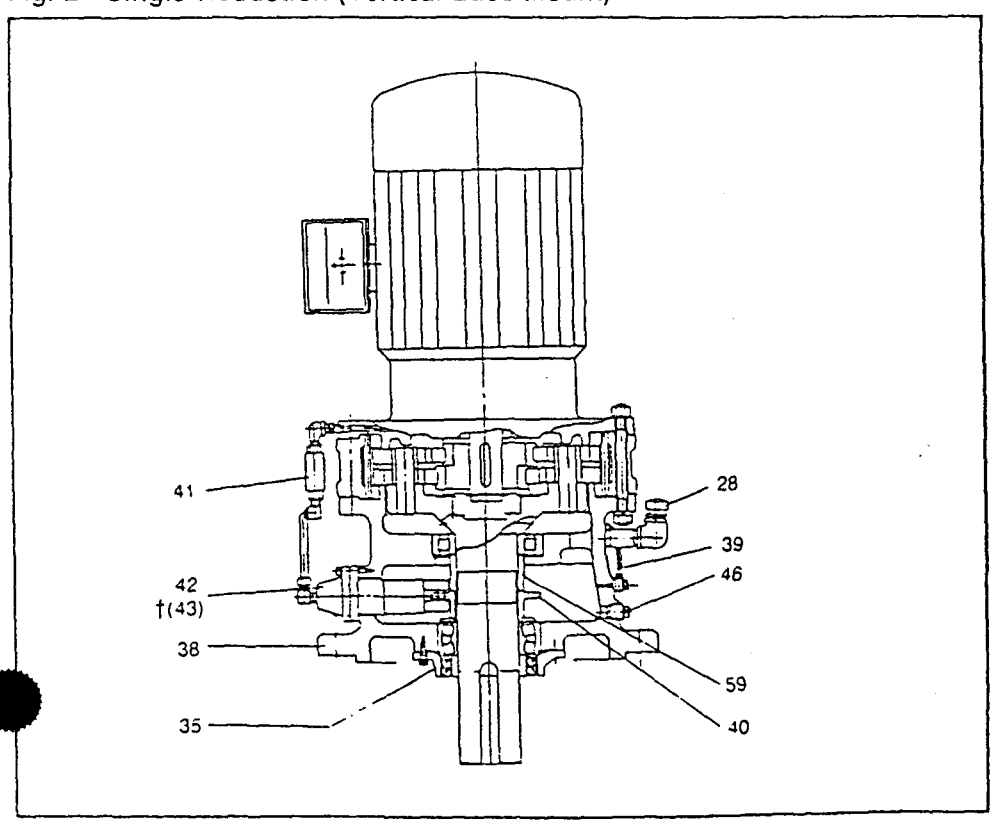

Table 1 Main Parts

Part No.	Part Name
1-01	Slow Speed Shaft w/pins
1-02	Bearing A
1-03	Bearing B
1-04H	Oil Seal Collar—Horizontal
1-06	Slow Speed Shaft Rollers
2-01	Ring Gear Housing
2-02	Ring Gear Pins
2-03	Ring Gear Rollers
2-04	Cyclo Disc
2-05	Spacer Ring
3-04	Eccentric Bearing Assembly
3-05	Eccentric Key
3-06	Balance Weight
3-07	Spacer
3-10	Retaining Ring
5-01	Intermediate Shaft w/Pins
5-02	Bearing F
5-03	Bearing G
5-04	Eccentric Bearing Assembly
6	Gasket Set
7	Casing Nuts & Bolts
12	Bolts For SS Oil Seal Housing
15	Grease Nipple
18	Slow Speed Output Oil Seal
25	Horizontal Oil Seal Housing
26	Horizontal Case
28	Oil Fill Plug
29	Oil Gauge—Horizontal Unit
35	Vertical Oil Seal Housing
38	Vertical Case (Integral V Type)
39	Oil Gauge—Vertical Unit
40	Cam
41	Piping Set & Oil Signal
42	Plunger Pump
43	Positive Displacement Pump
46	Drain Plug
55	Intermediate Cover
57	Eye Bolt
*59	Spacer

Note: For details of oil seals, bearings or gaskets, refer to pages 10 and 11.
†Refer to Table on Pg. 7 for units which require a positive displacement pump.
*Pt. No. 58 — frame sizes 3195-3275 only.
*Pt. No. 59 — frame sizes 3205-3275 only

Fig. 3 Speed Reducer/Single Disc Type (Frame Size 3075-3095)

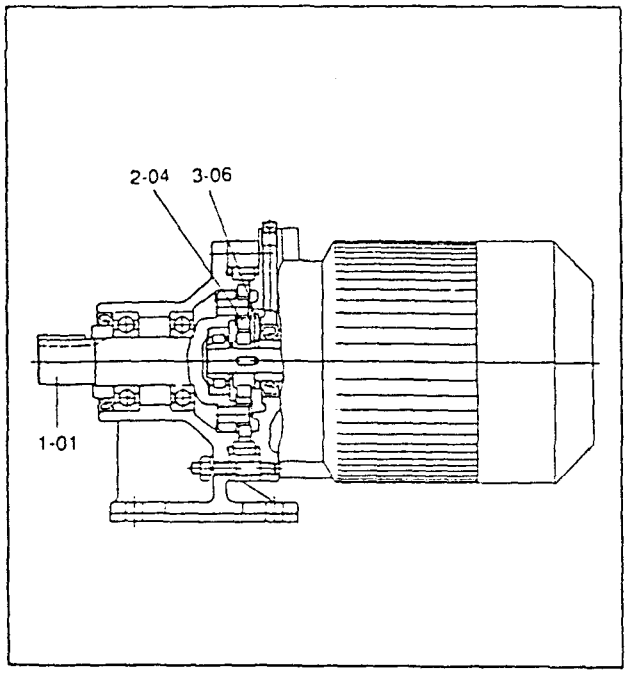

Fig. 4 Speed Reducer/Double Reduction

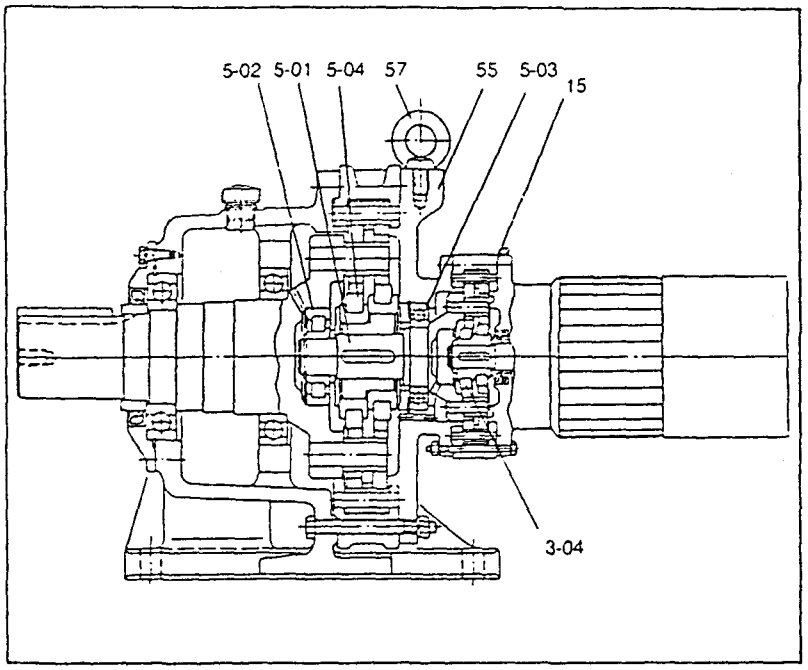

Speed Reducer — Single Disc

SM-CYCLO single reduction, Models No. 3075-3095 employ the use of a single planetary gear (Cycloid Disc) and a balance weight.

Multiple Reduction Reducers

Multiple reduction SM-CYCLO Reducers are a combination of standard reduction mechanism assemblies connected using an intermediate shaft (Part No. 5-01) and intermediate cover (Part No. 55) between them.

Table 2 Frame Sizes and Ratio Combination Of Double Reduction Models

Frame Size Combination

Frame Size	Second Stage	First Stage
3097/08	3097	3085
3105/08	3105	3085
3115/09	3115	3095
3145/10	3145	3105
3155/09	3155	3095
3165/11	3165	3115
3175/11	3175	3115
3185/14	3185	3145
3190/11	3190	3115
3195/11	3195	3115
3195/14	3195	3145

Frame Size	Second Stage	First Stage
3205/11	3205	3115
3205/14	3205	3145
3215/14	3215	3145
3215/16	3215	3165
3225/14	3225	3145
3225/17	3225	3175
3235/16	3235	3165
3235/18	3235	3185
3245/16	3245	3165
3245/18	3245	3185
3255/17	3255	3175
3255/19	3255	3195
3265/19	3265	3195
3275/19	3275	3195

Reduction Ratio Combination

Total Ratio	Second Stage Ratio	First Stage Ratio
102	17	6
121	11	11
165	15	11
174	29	6
187	17	11
210	35	6
231	21	11
258	43	6
289	17	17
319	29	11
354	59	6
385	35	11
473	43	11
493	29	17
522	87	6
595	35	17
649	59	11
731	43	17
841	29	29

Total Ratio	Second Stage Ratio	First Stage Ratio
957	87	11
1003	59	17
1015	35	29
1225	35	35
1247	43	29
1479	87	17
1505	43	35
1711	59	29
1849	43	43
2065	59	35
2523	87	29
2537	59	43
3045	87	35
3481	59	59
3741	87	43
5133	87	59
7569	87	87

Lubrication

SM-CYCLO® reducers, frame sizes 3075 through 3115 are grease-lubricated. Sizes 3140 through 3275 are normally oil-lubricated. Double reduction units *may be grease or oil-lubricated, depending on size,* ratio, and/or application.

Grease Lubrication

Single Reduction Models—Table 3

Frame Size	3075	3085	3090 3095 3097	3100 3105	3110 3115
Horizontal Shaft	Grease (MAINTENANCE FREE)				
Vertical Shaft	Grease (MAINTENANCE FREE)				

For the single reduction units, frame sizes 3075-3115 (maintenance-free type), NLGI No. 2 is designated. NLGI No. 2 is also designated for grease-lubricated *multi-reduction units.*

Grease-lubricated models are filled with grease before shipment to customer and are ready for use.

Double Reduction Models—Table 4

Frame Size		3085/08 thru 3155/09	3165/11	3175/11	3185/14	3190/11 3195/11 3195/14	3205/11 3205/14	3215/14 3215/16	3225/14 3225/17	3235/16 3235/18	3245/16 3245/18	3255/17 3255/19	3265/19	3275/19
Horizontal			Oil Lubricated Models											
VERTICAL	< Ratio > 102 ~ 493													
	522 ~ 841													
	957 ~ 1015	Grease Lubricated Models												
	1225 ~ 2523													
	2537 ~ 3045													
	3045 ~ 7569													

Triple Reduction Models—Table 5

Horizontal Shaft	Frame Size of The 1st Reduction Stage: 3105 or Smaller	Grease Lubricated (NLGI Grade 2)
Vertical Shaft	Frame Sizes: 3075/07/07 3265/19/14	Grease Lubricated (NLGI Grade 2)
	Frame Sizes: 3275/19/11 3275/19/14	*Depending On The* Operating Condition Consult Factory

Note: Tables above are for operation at standard input speed. If the input speed differs from the standard, please consult factory.

Designated Greases—Table 6

For additional information please refer to Engineering Sheet No. 336.03.00

Ambient Temperature F° (C°)	Single Reduction (Maintenance Free)	Double Reduction
−5 ~ 122 (−15 ~ 50)	NLGI No. 2	NLGI No. 2

Grease Replenishment And Change Interval—Table 7

Model	Condition		Interval
Single Reduction (Maintenance Free Type)	Replenishment		NOT REQUIRED
	*Overhaul		Every 20,000 Hours Or Every 4 ~ 5 Years
Double Reduction	Replenishment	Less Than 10 Hours Per Day Operation	Every 3 ~ 6 Month
		10 ~ 24 Hours Per Day	Every 500 ~ 1000 Hours
	Change	Speed Reduction Mechanism, High Speed Shaft Bearings (Speed Reducer Type)	Every 2 ~ 3 years
		Slow Speed Shaft Bearings	Every 3 ~ 5 Years

*Overhauling consists of disassembling the unit, replacing the seals and gaskets, cleaning the internal parts, and then repacking the unit with designated grease.

Note 1: Frame sizes 3075-3115 are maintenance free units. Grease replenishment and change not being necessary. Where longer life of the drive is expected or if relubricating is preferred before recommended period of time, refer to Tables 6, 7 and 8.

Quantities Of Grease (Ounces)—Table 8

Frame Size	3075	3085	3090 3095 3097	3100 3105	3110 3115
Speed Reduction Mechanism	.7	.7	2.1	3.5	8.5
Slow Speed Shaft Bearings	.4	.9	2.3	3.9	4.9

Frame Size	3097/08	3105/08	3115/09	3145/10	3155/09	3165/11	3175/11	3185/14	3190/11 3195/11	3195/14	3205/11
Speed Reduction Mechanism (First Stage)	0.7	0.7	2.1	2.3	1.4	5.3		15.9	5.3	15.9	5.6
Speed Reduction Mechanism (Second Stage)	2.1	3.5	8.5	.15.9	15.9	26.5	35.3	38.8	52.9		52.9
Slow Speed Shaft Bearing (Second Stage)	2.3	3.9	4.9	10.6	10.6	10.6	17.6	21.2	24.7		24.7

Frame Size	3205/14	3215/14	3215/16	3225/14	3225/17	3235/16	3235/18	3245/16	3245/18	3255/17	3255/19	3265/19
Speed Reduction Mechanism (First Stage)	15.9		26.5	15.9	35.3	26.5	38.8	26.5	38.8	35.3	52.9	
Speed Reduction Mechanism (Second Stage)	52.9	70.5		88.2		141.0		158.7		211.6		282.2
Slow Speed Shaft Bearing (Second Stage)	24.7	28.2		31.7		35.3		38.8		42.3		45.9

Note 1: Replenish grease to the reduction mechanism 1/3 to 1/2 of quantities for the first reduction stage described in Table 8 in accordance with replenishment interval recommended in Table 7.

Note 2: When the unit is disassembled for overhauling, refill with grease in quantities indicated in Table 8. Or alternatively, 80% of the space around reduction mechanism and slow speed shaft bearings of single reduction units and 50% around reduction mechanism of both first and second stage of double reduction units.

Slightly larger quantities may be supplied to lower reduction ratio units, and somewhat smaller quantities for high reduction

Apply grease liberally to the central part (i.e., around the eccentric bearings) of the mechanism. Apply grease to both the slow speed and high speed shaft bearings as you would do to ordinary bearings at time of re-assembly.

Note 3: If excessive grease is added, agitation heating of the grease will raise the operating temperature of the unit. Avoid excessive greasing, however, as the reverse case, when the grease is insufficient it will raise the operating temperature due to the breakdown of the lubrication films on the eccentric bearing.

If a rise in the operating temperature is found supply grease

Oil Lubrication

SM-CYCLO® reducers sizes 3145 through 3275 are normally oil-lubricated. Double reduction units may be grease or oil-lubricated, depending on size, ratio, and/or application.

Oil-lubricated models are shipped without oil. Units must be filled with recommended oil prior to start-up.

Single Reduction Models—Table 9

Frame Size	3140 3145	3150 3155	3160 3165	3170 3175	3180 3185	3190 3195	3205	3215	3225	3235	3245	3255	3265	3275
Horizontal Shaft	Oil Bath													
Vertical Shaft	Oil Bath	Forced-oil Lubrication												

Double Reduction Models—Table 10

Frame Size		3165/11	3175/11	3185/14	3190/11 3195/11 3195/14	3205/11 3205/14	3215/14 3215/16	3225/14 3225/17	3235/16 3235/18	3245/16 3245/18	3255/17 3255/19	3265/19	3275/19
Horizontal							Oil Bath						
VERTICAL SHAFT	< Ratio > 102 ~ 493												
	522 ~ 841	Grease Lubricated Models					Forced-Oil Lubrication						
	957 ~ 1015												
	1225 ~ 2523												
	2537 ~ 3045												
	3045 ~ 7569												

Triple Reduction Models—Table 11

Horizontal	Frame Size Of The 1st Reduction Stage: 3115 Or Larger	Oil Bath Lub. (Refer to Table 12)
Vertical	Frame Size: 3275/19/11 and 3275/19/14	Depending On the Operating Condition Consult Factory

Note: Tables above are for operation at standard input speed. If the input speed differs from the standard, please consult factory.

Forced Lubrication For Vertical Units

Plunger Pump Type

Small Size Pump		Large Size Pump	
Frame Size	Ratio	Frame Size	Ratio
3160 3170 3180 3190 3165 3175 3185 3195	All	3205 3215 3225 3235 3245	All
3165/11 thru 3195/14	All	3255	21-87
		3265	43-87
		3205/11-3265/19	All

Positive Displacement Type Pump

SM-CYCLO Reducer		Positive Displacement Pump
Frame Size	Reduction Ratio	
3255	11, 15	TOP-216HAVB-3
3265	11, 15, 21, 29	
3275	All	
3275/19	All	TOP-204HAVB-3

1-1 Plunger Lubrication

The plunger pump (Part No. 42) is automatically operated by a cam (Part No. 40) fitted on the slow speed shaft (Part No. 1-01). The number of pumping cam teeth required is in direct relation to the reduction ratio and frame size. For input speeds other than standard, consult factory.

1-2 Positive Displacement Pump Lubrication

Forced oil lubrication is accomplished by using a positive displacement pump and motor which requires an additional electric power source. It is recommended that the main motor be interlocked with the pump motor to avoid misoperation. The pump must be started 30 seconds or longer before the main motor is operated

Type Of Lubrication Oil—Table 12

Mild EP Oil is used for the lubrication of SM-CYCLO® Reducers, Models 3140 and larger.

For additional information please refer to Lubrication Specification Sheet No. 03.301.63.002

Ambient Temperature	14°F ~32°F (-10°C ~ 0°C)	32°F ~ 95°F (0°C ~ 35°C)	95°F ~ 122°F (35°C ~ 50°C)
Viscosity @ 40°C (104°F) cSt.	41.4 ~ 74.8	90 ~ 165	198 ~ 506
ISO Viscosity Grade	46 ~ 68	100 ~ 150	220 ~ 460
AGMA Viscosity Grade	2EP	3EP 4EP	5EP ~ 7EP
Viscosity @ 100°F (38°C) SSU	214 ~ 389	468 ~ 871	1047 ~ 2719
SAE Grade (Crankcase Oils)	20 W	30 40	50

Allowable Viscosity Of Oil—Table 13

Minimum Allowable Viscosity To Maintain Adequate Lubricating Oil-film		80 SUS During Operation
Maximum Allowable Viscosity To Allow Easy Starting	Oil Bath	20,000 SUS At Operation Start
	Forced-Oil Lubrication	10,000 SUS At Operation Start

Oil Quantities (Gallons)—Table 14

	Frame Size	3140 3145 3150 3155	3160 3165	3170 3175	3180 3185	3190 3195	3205	3215	3225	3235	3245	3255	3265	3275
Single Reduction	Horizontal	0.2	0.4	0.5	0.6	1.1	1.5	2.3	2.6	4.0	4.2	5.6	7.7	14.8
	Vertical	0.3	0.3	0.5	0.5	0.7	1.5	2.0	2.6	3.2	4.0	7.4(7.7)	9.0(9.3)	(15.9)

	Frame Size	3165/11	3175/11	3185/14	3190/11 3195/11 3195/14	3205/11 3205/14	3215/14 3215/16	3225/14 3225/17	3235/16 3235/18	3245/16 3245/18	3255/17 3255/19	3265/19	3275/19
Double Reduction	Horizontal	0.4	0.6	0.9	1.6	1.6	2.7	2.9	4.5	4.8	6.1	8.5	18.5
	Vertical	0.3	0.5	0.5	0.7	2.9	3.7	4.8	6.1	7.7	11.1	13.5	(15.9)

The above quantities shown in parentheses are for the forced-oil lubricated models with a positive displacement pump.

Oil Change—Table 15

Oil Change Interval		Operation Condition
Initial Oil Change	After 500 Hours of Primary Operation	Under Every Condition
Subsequent Oil Change	Every 6 Months	Less Than 10 Hours/Day Operation
	Every 2,500 Hours	10 ~ 24 Hours/Day Operation
	Every 1 ~ 3 Months	High Ambient Temperature, High Humidities Or Atmosphere Of Active Gas

Fig. 5

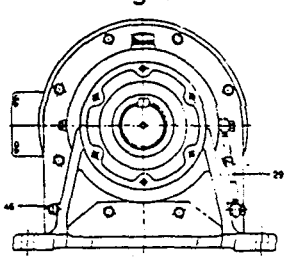

Oil Fill Procedure

Fill the reducer with recommended oil through the filler plug before start-up. The oil levels must be to the upper red line on the oil level gauge while the unit is not operated, and above the lower red line during operation. If too much oil is supplied, the temperature will rise due to the churning heat of the oil; or, oil will leak across the high speed shaft oil seal.

Oil Level Gauge

When it becomes difficult to check the oil level due to the discoloration of the vinyl hose, the gauge must be replaced. The standard vinyl oil gauge shall be used [illegible] reducer is used at ambient temperatures greater than 100°F (+40°C) or less than −4°F (−20°C), a glass gauge set or a dipstick is recommended.

Note 1: When draining oil, remove drain plug (Part No. 46) or lower side plug of the oil level gauge. See fig. 5.

Note 2: Before filling vertical base type unit with lubrication oil, remove the vent plug (Part No. 14. See picture on pg. 3). After filling, apply teflon sealing tape to threads of the vent plug prior to installation.

Note 3: The oil level gauge can be attached on either side of the casing on horizontal units. Locate on whichever side is more convenient to check oil level. (The oil level gauge is normally attached on the right when viewed from slow speed shaft end.)

Oil Level Dimensions

Foot Mount Horizontal Type
Fig. 6

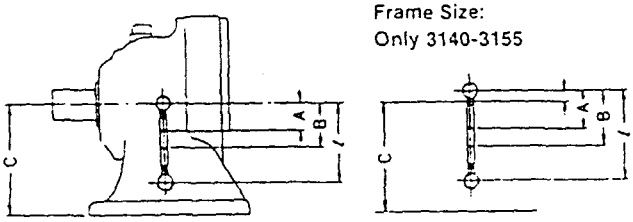

Table 16 Oil Level Dimensions (Inches)

Frame Size	A	B	C	ℓ
3140-3145	1.38	2.18	5.91	4.66
3150-3155	1.38	2.18	5.91	4.66
3160-3165	1.57	2.75	6.30	3.70
3165/11	1.18	1.78	6.30	3.70
3170-3175	1.97	3.34	7.87	4.96
3175/11	1.18	1.78	7.87	4.96
3180-3185	2.18	3.93	8.66	5.91
3185/14	1.38	2.18	8.66	5.91
3190-3195	2.25	3.25	9.84	6.61
3190/11-3195/11	1.18	1.78	9.84	6.61
3195/14	1.38	2.18	9.84	6.61
3205	2.12	3.18	9.84	5.47
3205/11	1.25	1.93	9.84	5.47
3205/14	1.25	2.13	9.84	5.47
3215	2.05	3.03	10.43	6.03
3215/14	1.18	1.97	10.43	6.03
3215/16	1.57	2.75	10.43	6.03
3225	2.25	3.43	11.03	6.50
3225/14	1.25	2.05	11.03	6.50
3225/17	1.85	3.43	11.03	6.50
3235	2.48	3.47	11.81	7.17
3235/16	1.57	2.75	11.81	7.17
3235/18	1.97	3.35	11.81	7.17
3245	2.76	3.78	13.19	7.76
3245/16	1.65	2.72	13.19	7.76
3245/18	2.00	3.35	13.19	7.76
3255	3.18	4.17	14.76	8.47
3255/17	1.97	3.35	14.76	8.47
3255/19	2.25	3.22	14.76	8.47
3265	3.22	4.22	15.75	9.49
3265/19	2.28	3.25	15.75	9.49
3275	3.35	4.53	21.25	11.22
3275/19	2.75	4.33	21.25	11.22

Base Mount Vertical Type
Frame Size: 3140-3155
Fig. 7

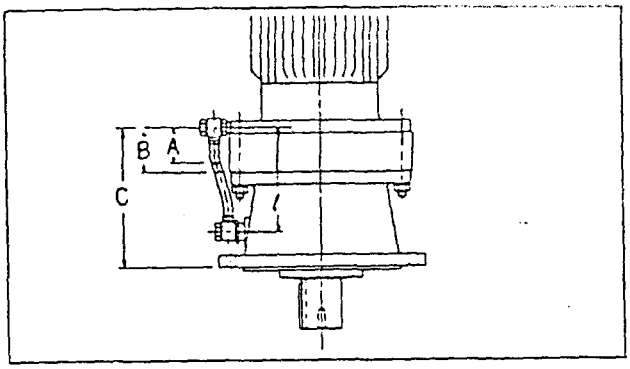

Base Mount Vertical Type
Table 17 Oil Level Dimensions (Inches)
Frame Size: 3140-3155

Frame Size	A	B	C	ℓ
3140-3155	1.85	2.72	7.46	5.78

Base Mount Vertical Type
Frame Size: 3160-3275
Fig. 8

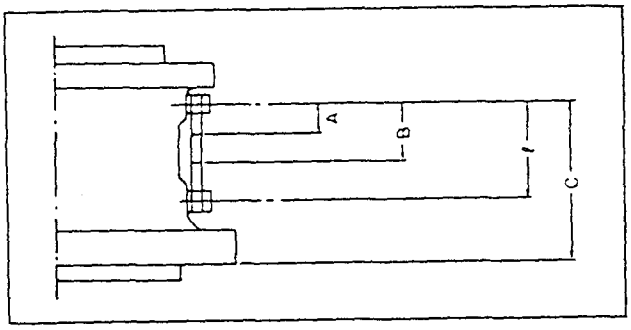

Base Mount Vertical Type
Table 18 Oil Level Dimensions (Inches)
Frame Size: 3160-3275

Frame Size	A	B	C	ℓ
3160-3165	1.03	1.42	4.68	2.71
3170-3175	1.69	2.48	6.03	3.78
3180-3185	1.93	2.71	6.73	4.25
3180-3195	2.09	3.27	7.87	5.47
3205	1.46	2.04	7.09	3.54
3215	1.46	2.04	7.09	3.54
3225	1.46	2.04	7.87	3.54
3235	1.46	2.04	7.72	3.54
3245	1.46	2.04	8.01	3.54
3255	1.46	2.04	8.64	3.54
3265	1.46	2.04	9.61	3.54
3275	1.97	2.75	13.38	5.50

REDUCER

Bearings, Oil Seals, Gaskets

Fig. 9

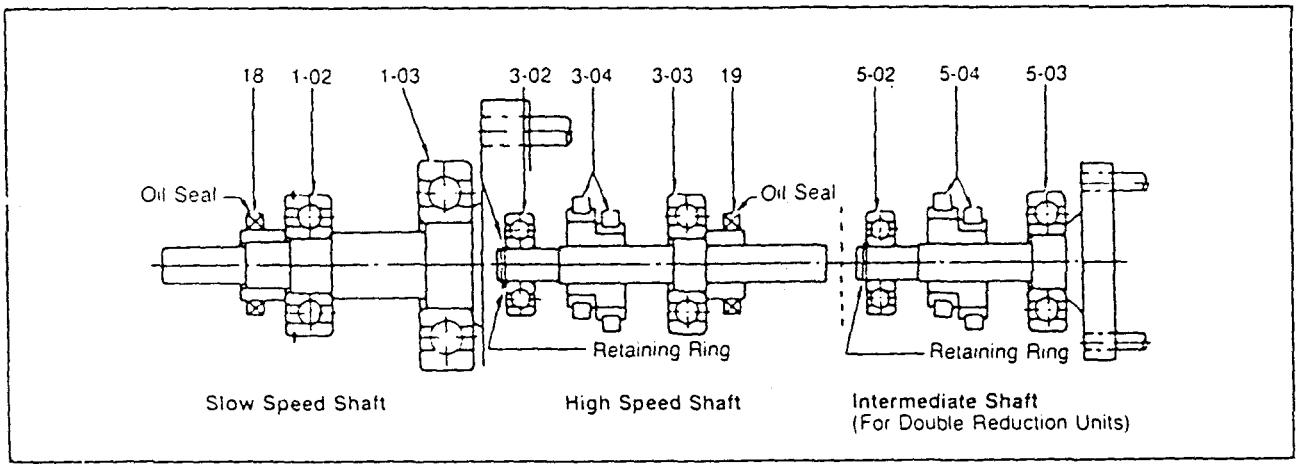

Table 19 Single Reduction Units

Frame Size	BEARING					OIL SEAL			
	SLOW SPEED SHAFT		MOTOR SHAFT			SLOW SPEED SHAFT			
	Part No. 1-02	Part No. 1-03	Part No. 3-02	Part No. 3-04		Part No. 18			
	Number	Number	Number	Number	Qty	*Type	Dimension	Qty H Type	Qty V Type
3075	6202Z	6203	6201	19UZ5208	1	D	20/35x7	1	1
3085	6204Z	6909	6301	19UZ5208	1	D	30/47x8	1	1
3090/5/7	6206Z	6011Z	NJ302RS5HZ	Refer to Table 21	1	D	45/62x9	1	1
3100/5	6306Z	6011Z	6302			D	50/72x12	1	1
3110/5	6308Z	6013	6304			D	65/90x13	1	1
3140/5	6211NR	6213	6305			D	65/88x12	1	2
3150/5	22211BNR	6213	NJ305			D	65/88x12	1	2
3160/5	6213NR	6215	NJ307			D	85/110x13	1	2
3170/5	6216NXR	6218	NJ406	60UZ587	2	D	95/130x15	1	2
3180/5	6218NR	6220	NJ407	65UZ588	2	D	110/145x15	1	2
3190/5	6221NR	6026	NJ408	85UZ589	2	D	120/155x16	1	2
3205	22220 BNRC2	6222C2	NJ310EV3	E-85UZ 5220	2	D	120/155x16	1	2
3215	23022 BNRC2	6224CZ	NJ311EV1	E-95UZ 5221	2	D	130/160x14	1	2
3225	23024 BNRC2	NUP226CZ	NJ312EV2	E-100UZ 5222	2	D	145/175x14	1	2
3235	23026 BNRC2	NUP228CZ	NJ313EV3	E-105UZ 5223	2	D	160/190x16	1	2
3245	23028 BNRC2	NUP230CZ	NJ314EV5	E-125UZ 5224	2	D	170/200x16	1	2
3255	23032 BNRC2	NUP234CZ	NJ316EV1	140UZ 5225	2	D	190/225x16	1	2
3265	23032 BNRC2	NUP236CZ	NJ317EV1	140UZ 5226	2	D	200/240x20	1	2
3275	23136 BNXR	6340	NJ417	180UZ 593	2	D	230/270x20	1	2

*D: Double lip (dust proof and seal lip) type.

Table 20 Double Reduction Units Intermediate Shaft Parts

Frame Size	BEARINGS			
	Part No. 5-02	Part No. 5-04		Part No. 5-03
	Number	Number	Q'ty	Number
3075/07	6201	19UZS208	1	6909
3085/07	6301	19UZS208	1	6909
3105/08	6302	Refer to Table 21	1	6007
3115/09	6304			6205
3145/10	6305			6206
3155/09	6305			6206
3165/11	NJ307G1			6208
3175/11	NJ406G1	60UZS87V	2	6208
3185/14	NJ407G1	65UZS88V	2	6213
3190/11-3195/11	NJ408G1	85UZS89V	2	6210
3195/14	NJ408G1	85UZS89V	2	6213

Frame Size	BEARINGS			
	Part No. 5-02	Part No. 5-04		Part No. 5-03
	Number	Number	Q'ty	Number
3205/11	NJ310EV3	E-85UZS220	2	6210
3205/14	NJ310EV3	E-85UZS220	2	6310
3215/14-3215/16	NJ311EV1	E-95UZS221	2	6311
3225/14-3225/17	NJ312EV2	E-100UZS222	2	6313
3235/16-3235/18	NJ313EV3	E-105UZS223	2	6314
3245/16	NJ314EV5	E-125UZS224	2	6315
3245/18	NJ314EV5	E-125UZS224	2	6316
3255/17-3255/19	NJ316EV1	140UZS225	2	6318
3265/19	NJ317EV1	140UZS226	2	6320
3275/19	NJ417	180UZS93	2	6420CS30

Note 1: Required quantity of bearings (Part No. 1-02, 1-03, 3-02, 3-03, 5-02, 5-03) for each unit is one.

Note 2: On Table 15, Bearing for eccentric (Part No. 5-04) suffixed with "V" such as 60UZS87V is roller bearing without retainer.

Fig. 10

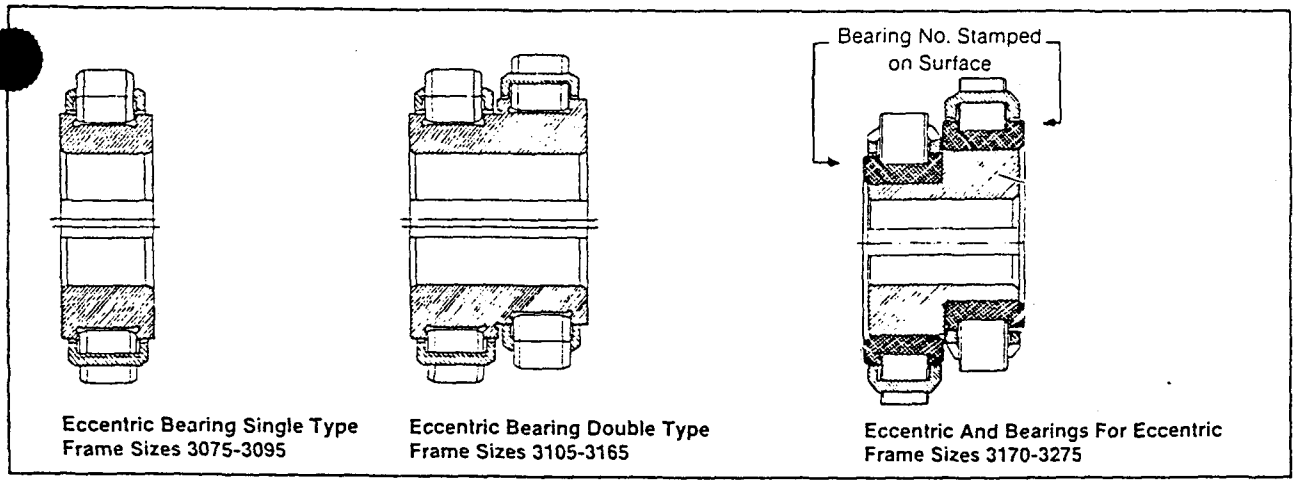

Eccentric Bearing Single Type Frame Sizes 3075-3095

Eccentric Bearing Double Type Frame Sizes 3105-3165

Eccentric And Bearings For Eccentric Frame Sizes 3170-3275

Table 21 *Identification No. Of Eccentric Bearing*

Frame Size	3090/5/7	3100 3105 3105/08	3110 3115 3115/09	3140 3145 3145/10	3150 3155 3155/09	3160 3165 3165/11
Part No. / Ratio	3-04					
6	15UZE20906	15UZ21006	22UZ21106	25UZ850611	—	35UZ8606
11	15UZE20911	15UZ21011	22UZ21111	25UZ850611	—	35UZ8611
17	15UZE20917	15UZ21017	22UZ21117	25UZ8517	—	35UZ8617
29	15UZE20929	15UZ21029	22UZ21129	25UZ852935	—	35UZ862935
35	15UZE20935	15UZ21035	22UZ21135	25UZ852935	25UZ852935	35UZ862935
43	15UZE20943	15UZ21043	22UZ21143	25UZ854359	—	35UZ8643
59	15UZE20959	15UZ21059	22UZ21159	25UZ854359	25UZ854359	35UZ8659
87	15UZE20987	15UZ21087	22UZ21187	25UZ8587	25UZ8587	35UZ8687

Electric Motor and Brake Motors

Sumitomo Heavy Industries Electrical Division has been manufacturing its various types of motors since 1913. The motor used with the SM-Cyclo® Gearmotor has been manufactured since 1969 with well over 3 million having been shipped throughout the world.

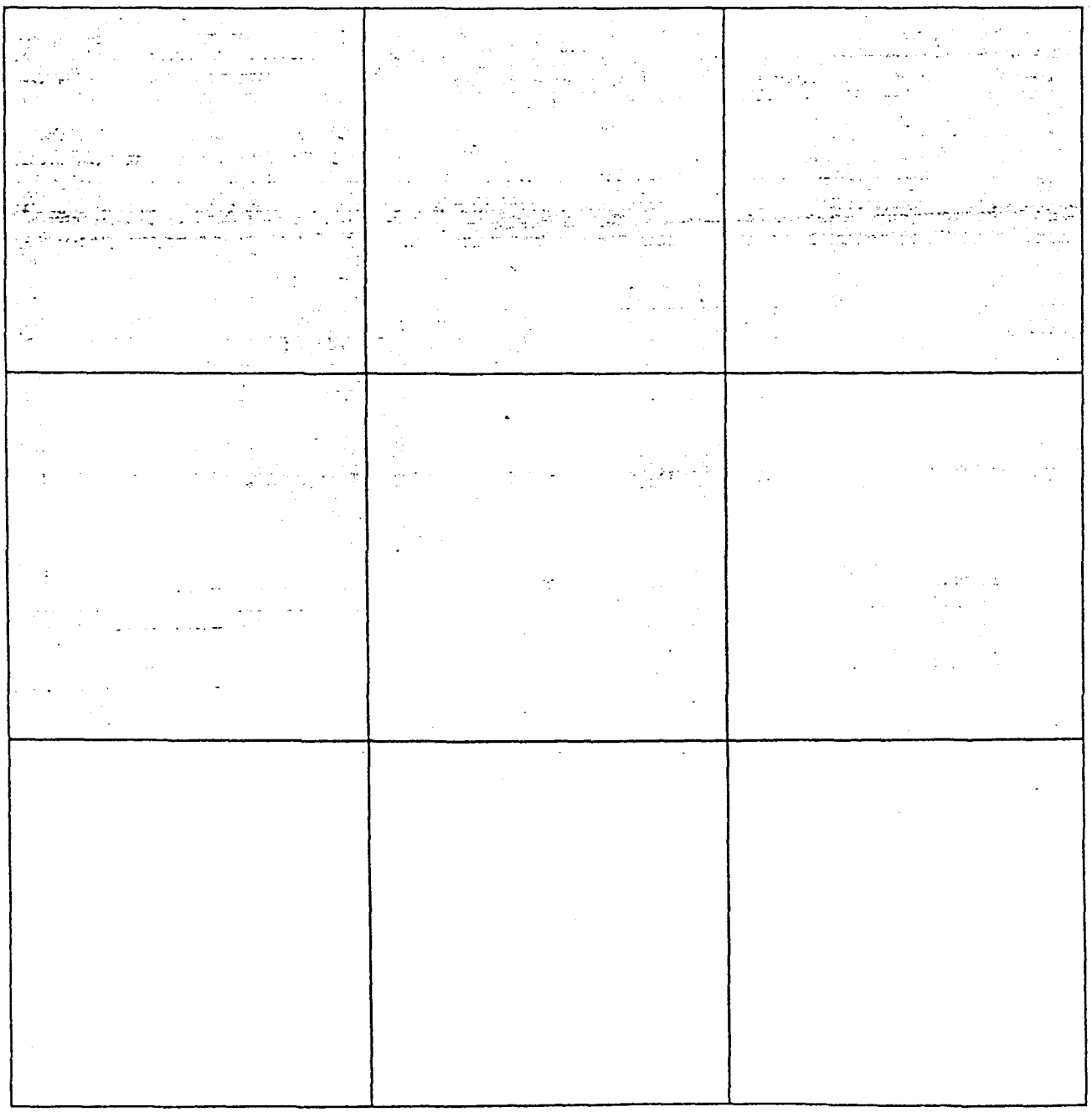

MOTOR

General Construction of Motor

Fig. 11 Motor construction

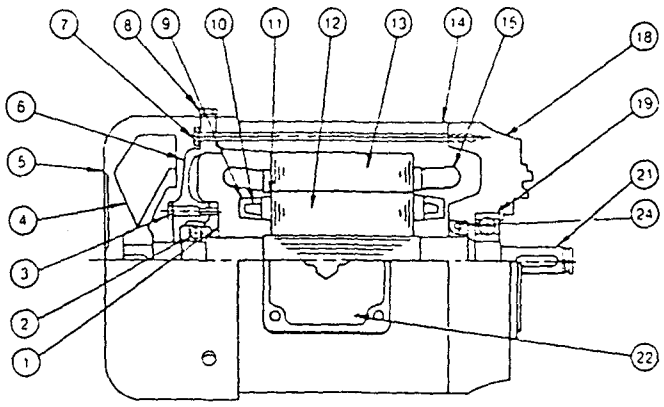

Frame Size M-63 thru M-71

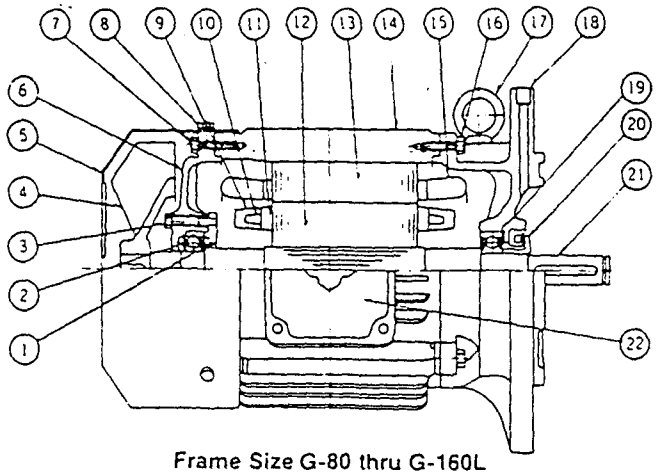

Frame Size G-80 thru G-160L

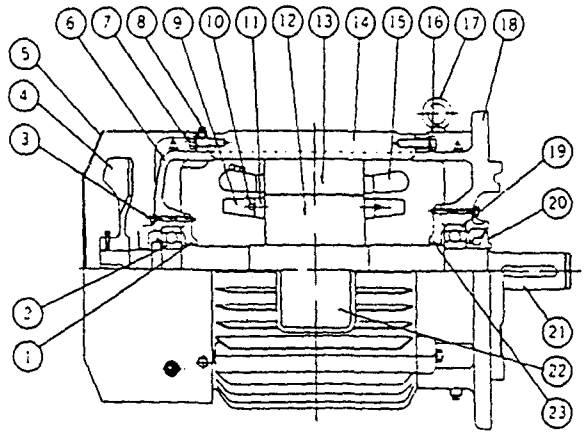

Frame Size G-180M and Larger

Table 22 Main Parts

Parts No.	Parts Name
1	Bearing Cover
2	Bearing
3	Bolt
4	Fan
5	Fan Cover
6	End Bracket
7	Bolt
8	Bolt
9	Internal Fan
10	Hub
11	Short Circuit Ring
12	Rotor Core
13	Stationary Core
14	Stator Frame
15	Stator Winding
16	Bolt
17	Eye Bolt
18	Cyclo Flange Bracket
19	Bearing
20	Slinger
21	Motor Shaft
22	Conduit Box
23	Bearing Cover
24	Oil Seal

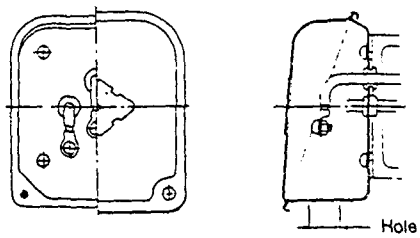

Fig. 12 Conduit Box-Standard Type

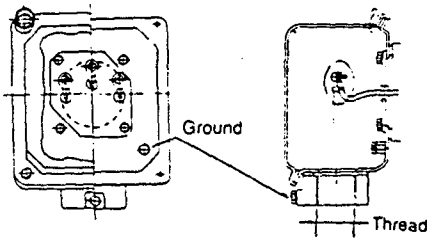

Fig. 13 Weather-Proof Type

General Inspection of Motor

The following items should be verified when the motor is delivered:

1. Check the nameplate horsepower rating (H.P.), number of poles (P), type, voltage (volt) and frequency (Hz).

2. Rotate the motor shaft by hand to check for binding.

3. Check the motor's overall appearance for possible shipping damage.

Pre-Start Up Inspection

Check the following prior to start-up:

1. **Wiring:** Prior to wiring refer to the name plate affixed to the motor portion of the gearmotor. Check power supply, interconnects, relays protective starting devices, [i.e. Star (Wye) delta—if reduced voltage starting is required], space heaters, thermal sensors and other accessories.

2. **Grounding: Caution:** The motor frame and conduit box must be properly grounded so as to avoid electrical shock.

3. **Insulation Resistance:** Stator winding measurements are to be made at the motor terminals. Stator windings of less than 600 volts are to be measured with a 500 volts megger.

Insulation resistance will vary depending on winding temperature, moisture, cleanliness, duration of usage, and test voltage and charging period.

Other factors which will affect insulation resistance are: output rating, voltage, insulation class and RPM.

Although it is difficult to decide a minimum value applicable to each and every case, for simplicity the following may be used as a guide:

1 megohms for less than 600 volts

If the measured insulation resistance is less than indicated above, the cause may be due to moisture. The resistance can therefore be increased by subjecting wire to heat, hot air, vacuum, current (short circuit current, low voltage—no load current, or direct current).

If the megohm reading cannot be recovered by drying—consult factory.

Fig. 14 Typical Wiring Diagrams

Illustrated below are the wiring diagrams for our standard motor, for additional information please refer to motor name plate.

THREE PHASE MOTORS

Y-Connected (2 HP and smaller)

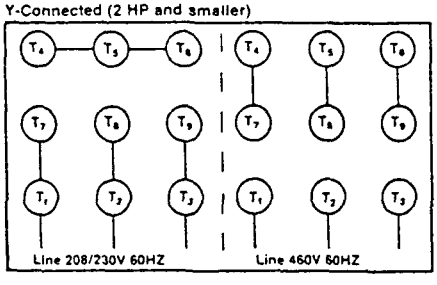

Delta-Connected (3 HP and larger)

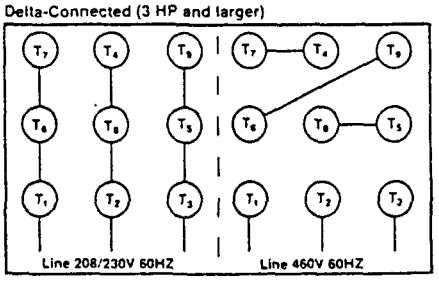

To reverse rotation interchange any two line leads.

SINGLE PHASE MOTORS

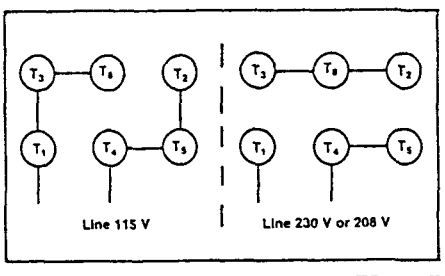

To reverse rotation interchange leads T5 and T8.

Preparation and Start-up

Prior to start-up, please check the following under no load:

1. The driven load and the SM-Cyclo gearmotor are properly secured prior to operation.

2. The motor bearings are grease packed when shipped from our factory, however, if the motor is operated after long term storage, you must replenish the grease in the open type bearing only. Please refer to page 15, Table 24 for correct quantity.

3. Check the direction of rotation. If a reverse direction is required, refer to the motor nameplate.

4. Check the voltage supply and current (line and phase) to verify balancing for a 3 phase power source.

5. When power is supplied to the motor and the starting is abnormally long, starting is not completed, or any abnormal sound is heard—immediately shut off the power and consult factory.

6. Measure the current draw. The current measured at full load should not exceed the nameplate rating.

MOTOR

Bearings, Oil Seals for Motor

Non-Contact Shield Type Ball Bearings

These bearings do not require grease replenishment, however, it is recommended that they be replaced once every three years when operated under normal conditions, and once every year when severe duty exists.

Open Type Ball or Roller Bearing

For interval of grease replenishment, quantities of grease and the type of grease for the open type bearing refer to tables 23 and 24.

Table 23 Type of Grease for Open Type Bearings

Class of Insulation	Grease
B	Shell Alvania No. 2
H, F	Shell Darina No. 2

Table 24
Interval and Quantity of Grease Replenishment

Bearing Size	Replenishment Qty (oz)	Initial Qty (oz)	Interval of Replenishment (HR)		
			900 rpm	1200 rpm	1800 rpm
6314	1.4	7.1	7000	5000	2500
6315	1.6	8.1	6500	4500	2500
6316	1.8	9.2	6500	4500	2500
6317	1.9	10	6000	4000	2000
6318	2.1	12	5500	4000	2000
6319	2.3	14	5500	3500	1500
6320	2.5	16	5000	3500	1500
6321	2.6	18	5000	3000	1500
6322	2.8	19	4500	3000	1000
6324	3.5	25	4000	2500	1000
6412	1.4	7.1	7000	5000	3000
6413	1.6	8.1	6500	4500	2500
6414	1.9	10	6500	4500	2500
NU314	1.4	4.2	3500	2500	—
NU315	1.6	5.3	3000	2000	—
NU316	1.8	7.1	3000	2000	—
NU317	1.9	8.8	3000	2000	—
NU318	2.1	10	2500	2000	—
NU319	2.3	12	2500	1500	—
NU320	2.5	14	2500	1500	—
NU321	2.6	16	2500	1500	—
NU322	2.8	18	2000	1500	—
NU324	3.5	23	2000	1000	—

Grease Replenishment Procedure

The gearmotor must be running with the drain plug removed. Using a grease gun, inject a quantity of grease until some grease is purged from the drain. Plug the drain approximately 10 minutes after start of operation.

Note: Excess grease replenishment may cause overheating or leakage. A lack of grease will cause premature failure.

Fig. 15 Typical Bearing Assembly

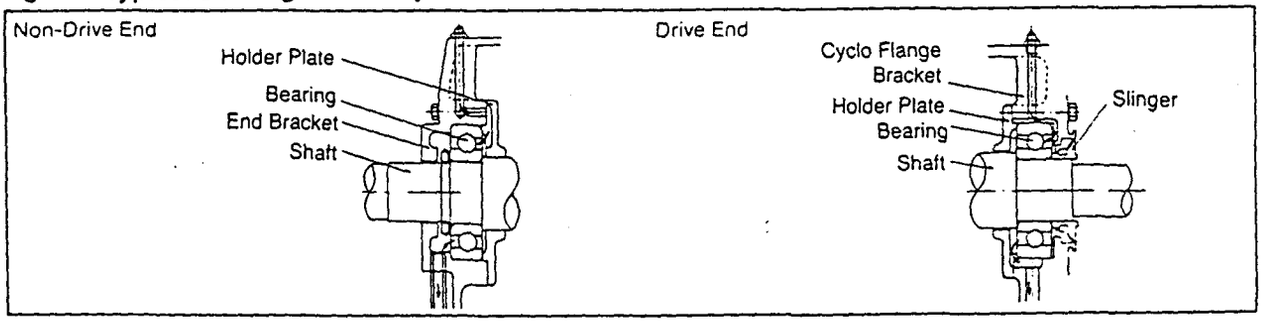

Oil Seal

The reducer and the motor of the SM-CYCLO® Gear motor are integrally assembled. In grease lubricated units, a single lip seal is installed between the motor section and reducer section as shown in figure 16. On oil lubricated units a slinger type oil seal is used—figure 17.

Fig. 16
Single Lip Type:
Grease Lubed Units

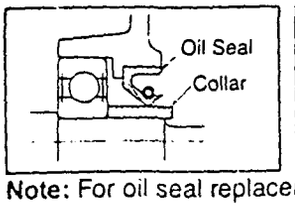

Fig. 17
Slinger Type:
Oil Lubed Units

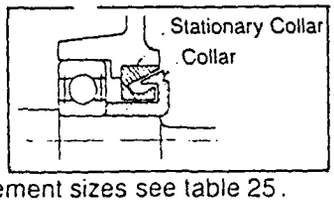

Note: For oil seal replacement sizes see table 25.

Bearings and Oil Seals

Table 25 Bearings and Oil Seals Sizes†

MOTOR FRAME NO.	MOTOR HP	MOTOR RPM	CYCLO FRAME SIZE	BEARING NON-DRIVE END	BEARING DRIVE END	OIL SLINGER SIZE*	OIL SEAL SIZE**
M-63S	1/8	1800	3075	6202ZZ	6203ZZ	—	S22357
			3085	6202ZZ	6203ZZ	—	522357
			3090/95/97	6202ZZ	6204ZZ	—	S26428
M-63	1/4	1800	3075	6202ZZ	6203ZZ	—	S22357
			3085	6202ZZ	6203ZZ	—	HMS22357
			3090/95/97	6202ZZ	6204ZZ	—	S26428
			3100/05	6202ZZ	6204ZZ	—	26428
M-71	1/3	1800	3085	6202ZZ	6203ZZ	—	S22357
			3090/95/97	6202ZZ	6204ZZ	—	S26428
			3100/05	6202ZZ	6204ZZ	—	S26428
	1/2		3110/15	6202ZZ	6205ZZ	—	S35558
G-80	3/4	1800	3090/95/97	6203ZZ	6303ZZ	—	S25458
	1		3100/05	6203ZZ	6303ZZ	—	S25458
			3110/15	6203ZZ	6205ZZ	—	S35358
			3140/45 3150/55	6203ZZ	6206ZZ	RSA306219	(MHS406212)
G-90L	1 1/2	1800	3097	6205ZZ	6303ZZ	—	S25458
			3100/05	6205ZZ	6303ZZ	—	S25458
	2		3110/15	6205ZZ	6305ZZ	—	S35558
			3140/45 3150/55	6205ZZ	6206ZZ	RSA306219	(MHS406212)
			3160/65	6205ZZ	6307ZZ	RSA356819	(MHS456812)
G-100L	3	1800	3110/15	6205ZZ	6305ZZ	—	S35558
			3140/45 3150/55	6205ZZ	6206ZZ	RSA306219	(MHS406212)
			3160/65	6205ZZ	6307ZZ	RSA356819	(MHS456812)
G-112M	5	1800	3110/15	6206ZZ	6305ZZ	—	S35558
			3140/45 3150/55	6206ZZ	6206ZZ	RSA306219	(MHS406212)
			3160/65	6206ZZ	6307ZZ	RSA356819	(MHS456812)
			3170/75	6206ZZ	6308ZZ	RSA408023	(MHS508014)
			3180/85	6206ZZ	6309ZZ	RSA458521	(MHS558514)
G-132S	7 1/2	1800	3140/45 3150/55	6307ZZ	6306ZZ	RSA306219	(MHS406212)
			3160/65	6307ZZ	6307ZZ	RSA356819	(MHS456812)
			3170/75	6307ZZ	6309ZZ	RSA458521	(MHS558514)
			3180/85	6307ZZ	6310ZZ	509022	(MHS609014)
			3190/95	6307ZZ	6311ZZ	559524	(MHS659514)
G-132M	10	1800	3140/45 3150/55	6307ZZ	6306ZZ	306219	(MHS406212)
			3160/65	6307ZZ	6307ZZ	RSA356819	(MHS456812)
			3170/75	6307ZZ	6309ZZ	RSA458521	(MHS558514)
			3180/85	6307ZZ	6310ZZ	509022	MHS609014
			3190/95	6307ZZ	6311ZZ	559524	(MHS659514)

†For 6 pole motors not shown, please consult factory.

MOTOR

MOTOR FRAME NO.	MOTOR HP	MOTOR RPM	CYCLO FRAME SIZE	BEARING NON-DRIVE END	BEARING DRIVE END	OIL SLINGER SIZE*	OIL SEAL SIZE**
G-160M	15	1800	3160/65	6309ZZ	6308ZZ	RSA356819	(MHS456812)
			3170/75	6309ZZ	6309ZZ	RSA458521	(MHS558514)
	10	1200	3180/85	6309ZZ	6311ZZ	559524	(MHS659514)
			3190/95	6309ZZ	6311ZZ	559524	(MHS659514)
			3200/05	6309ZZ	6312ZZ	509022	(MHS609014)
			3215	6309ZZ	6313ZZ	559524	(MHS659514)
G-160L	20	1800	3160/65	6309ZZ	6308ZZ	RSA356819	(MHS456812)
			3170/75	6309ZZ	6309ZZ	RSA458521	(MHS558514)
	15	1200	3180/85	6309ZZ	6311ZZ	559524	(MHS659514)
			3190/95	6309ZZ	6311ZZ	559524	(MHS659514)
			3205	6309ZZ	6312ZZ	509022	(MHS609014)
			3215	6309ZZ	6313ZZ	RSA6511529	(MHS659514)
G-180M	25	1800	3165	6312ZZ	6308ZZ	RSA356189	(MHS456812)
	30	1800	3175	6312ZZ	6309ZZ	RSA458521	(MHS558514)
	20	1200	3180/85	6312ZZ	6311ZZ	559524	(MHS659514)
			3190/95	6312ZZ	6313ZZ	6511529	(MHS8011515)
			3205	6312ZZ	6312ZZ	509022	(MHS609014)
	20	1200	3215	6312ZZ	6313ZZ	559524	(MHS659514)
			3225	6312ZZ	6314ZZ	6010026	(MHS7510013)
F-180L	40	1800	3190/95	6312ZZ	6313ZZ	6511529	(MHS8011515)
			3205	6312ZZ	6312ZZ	509022	(MHS609014)
			3215	6312ZZ	6313ZZ	559524	(MHS659514)
			3225	6312ZZ	6314ZZ	6010020	(MHS7510013)
	25	1200	3235	6312ZZ	NU314G1	6511529	(MHS8011515)
	30	1200	3245	6312ZZ	NU315G1	7013029	(MHS10513013)
F-200L	50	1800	3205	6312ZZ	6312ZZ	509022	(MHS609014)
	60	1800	3215	6312ZZ	6313ZZ	559524	(MHS659514)
			3225	6312ZZ	6314ZZ	6010026	(MHS7510013)
	40	1200	3235	6312ZZ	NU314G1	6511529	(MHS8011515)
			3245	6312ZZ	NU315G1	7013029	(MHS10513013)
	50	1200	3255	6312ZZ	NU317G1	8514030	(MHS11014014)
			3265	6312ZZ	NU318G1	9015038	(MHS12015014)
F-225S	75	1800	3215	6314ZZ	6313ZZ	559524	(MHS659514)
			3225	6314ZZ	6314ZZ	6010026	(MHS7510013)
			3235	6314ZZ	NU314G1	6511529	(MHS8011515)
			3245	6314ZZ	NU315G1	7013029	(MHS10513013)
	60	1200	3255	6314ZZ	NU317G1	8514030	(MHS11014014)
			3265	6314ZZ	NU318G1	9015038	(MHS12015014)
F-250S	75	1200	3235	6314ZZ	NU314G1	DT218WW	(MHS8011515)
			3245	6314ZZ	NU315G1	CD4-3160	(MHS10513013)
			3255	6314ZZ	NU317G1	8014030	(MHS110014014)

Oil slinger is used on oil lubricated cyclo gearmotors
**Oil seal is used on grease lubricated cyclo gearmotors. Where oil lubrication is standard, oil seal is shown in ( )

Disassembly/Assembly of Gearmotor

Disassembly:

SM-CYCLO® Gearmotors are designed to provide maximum ease in disassembly and reassembly they require no special maintenance skills.

The following procedures and precautions are recommended at time of disassembly and assembly:

- Work should be performed in a dust-free, humidity-free area.
- Use of a soft or plastic hammer is recommended.
- Care should be taken not to damage parts, i.e. coil, bearings, seals, etc.
- Inspect all components and replace as necessary.
- Be extremely careful in handling of bearings.

1. Remove the complete SM-CYCLO® Gearmotor from the driven machine.

2. Place the gearmotor vertically with the output shaft upward.

3. Remove the through bolts from the motor flange, ring gear housing, and lift the slow speed side, thus separating the unit into two parts so that the inner mechanism can be removed (Fig. 18-23).

4. If the unit will not separate easily, gently drive a wedge at the line X...X shown in Fig. 1 on page 3 (if in so doing a burr is produced, be sure to remove it before reassembly).

5. To lift the slow speed side, attach an eyebolt to the tapped hole on the end of the slow speed shaft and use a hoist or chain block (Fig. 18).

6. Take out the slow speed shaft rollers, item 1-06, page 3 (Fig. 19). Check the slow speed shaft pins (1-01) to see whether any rollers have adhered to them.

7. The top cycloid disc (2-04) on the slow speed side can be easily lifted out with both hands (Fig. 20).

8. Remove the spacer ring (2-05).

9. The eccentric bearing assembly (3-04) can be removed from the motor shaft after taking out the retaining ring (3-10), or the bearings (3-02), figures 21, 22.

Note, in certain sizes, the eccentric bearings are roller bearings without a retainer. Remove rollers of the top disc and the second disc on the motor side before removing the eccentric.

10. Take out the second disc located on the motor side.

11. Remove the ring gear housing (2-01) from the motor.

12. The slow speed shaft (1-01) with its bearings is removed from the casing (26) as follows: (a) Remove the slow speed end cap (25). (b) With a wooden or hard rubber mallet, rap the inner end of the slow speed shaft to expose the retaining ring* from the outer raceway of the bearing. (c) Remove the retaining ring. (d) Rap the outer end of the slow speed shaft with a wooden or hard rubber mallet, and remove it from the casing.

13. The cycloid disc is made from bearing steel and is heat treated, while the spacer ring is cast iron. Take care not to strike them together while handling.

*Note 1: Retaining ring is part of bearing A. (See Part 1-02)

2: If motor is in need of repair, please send to any authorized EASA shop.

Assembly

SM-CYCLO® Gearmotors are reassembled by reversing the disassembly procedure. Care must be taken to exclude dust or foreign matter from the moving parts, and to see that gaskets are properly placed to make the assembly oil-tight.

Following are some helpful points to remember when assembling SM-CYCLO® Gearmotors.

1. Set the ring gear housing and insert the ring gear pins and rollers: then test-rotate the pins and rollers by hand. (Apply grease liberally to the ring gear pins and rollers before they are inserted in grease lubricated SM-CYCLO® Gearmotors).

2. Cycloid discs are a matched pair each carrying the same number which is stamped on one side of each disc.

3. Set the cycloid disc with the stamped number face up as shown in figure 23.

4. Insert the end plate (35) and then insert the eccentric with bearings by rapping with a wooden or hard rubber mallet (Fig. 22).

5. Insert the other end plate and the inner bearing raceway. Secure them with the retaining ring (Fig. 21).

6. Set the spacer ring in place.

7. Insert top disc in such a way that the mark is 180° opposed to the marking of the bottom disc (Fig. 20).

8. Insert slow speed shaft rollers (Fig. 19).

9. Put the slow speed shaft pins into the rollers (Fig. 18). The above instructions are for eccentric bearings with retainer. Following are the instructions suggested for roller bearings without retainer:

a. First insert the eccentric with inner raceways of bearings by rapping with a wooden or hard rubber mallet.

Fig. 18

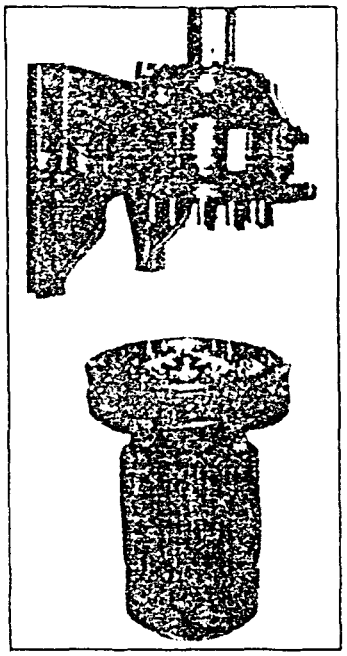

Fig. 19

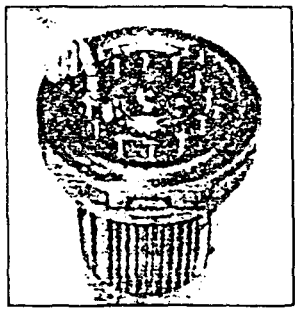

Fig. 20

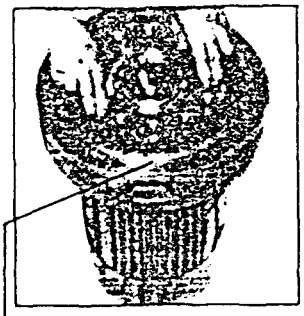

Fig. 21

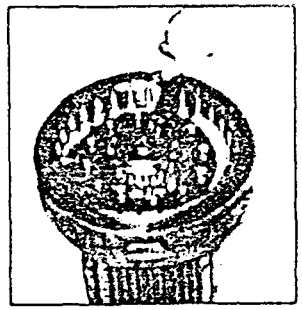

Fig. 22

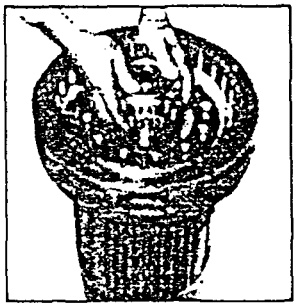

Fig. 23

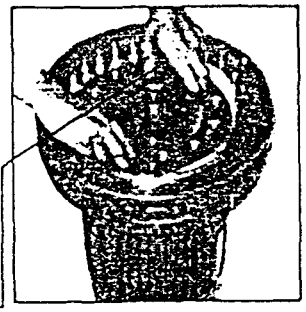

Note: Insert second disc with number facing slow speed side, exactly 180° opposed to number on first disc.

Note: Set disc with number facing slow speed side.

b. Apply grease to the raceway of the eccentric on the disc. Fix the rollers and set disc in place.

c. Insert the spacer ring and set second disc in such a way that mark is 180° opposed, to mark of bottom disc.

Eccentric Bearing Replacement Precautions

The eccentric bearings are specially designed for installation on SM-CYCLO Reducers. They are special roller bearings without outer raceways (refer to the list of bearings on page 11).

It is necessary to insert replacement bearings with numbered surfaces of the inner raceways facing outward. Note that the wrong insertion of the bearings (i.e., insertion of bearings with numbered surfaces inside) causes trouble.

Disassembly and Assembly of Sizes 3085-3095 SM-CYCLO® Reducers

Small sizes 3085-3095 are of a single disc system, so they differ in construction from larger sizes in the following ways:

1. A balance weight is provided in lieu of the two-disc system. Refer to figure 24.

2. The balance weight must be positioned exactly 180° as opposed to that of the eccentric.

3. There are no end plates on either side of the eccentric. In all other respects, 1805-1815 have exactly the same construction as the larger sizes. Follow the instructions given under "Disassembly and Assembly".

Disassembly Of Output Side (3085-3115)

1. With casing supported, tap output shaft until it is disengaged from casing.

2. Remove bearing "A" by using pulling tool.

3. Replace all bearings, gaskets and seals when reassembling. (Page number 10 & 11).

Assembly Of Output Side (3085-3115)

1. Assemble the "B" Bearing (Part No. 1-03) on the slow speed shaft (Part No. 1-01). Heating of "B" Bearing is recommended for easier assembly.

Note: Do not exceed temperature of 200°F.

2. Assemble the casing (Part No. 26) over the slow speed shaft (Part No. 1-01).

3. Carefully tap bearing "A" (Part No. 1-02) onto the slow speed shaft (Part No. 1-01) until the bearing is flush with the shoulder of the casing.

4. Place the collar (Part No. 1-04H) onto the slow speed shaft (Part No. 1-01). Heating the collar is recommended for easier assembly.

5. Insert the oil seal (Part No. 18), lip in, into the casing (Part No. 26).

Fig. 24

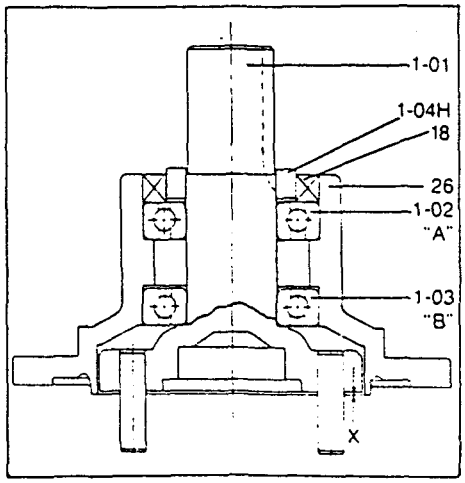

SM-CYCLO® Reducer Trouble-Shooting and Repair

This trouble shooting guide is to help you identify and overcome common problems of reducers. If you have a problem not listed below, please consult factory at Teterboro.

PROBLEM WITH THE REDUCER		POSSIBLE CAUSES	SUGGESTED REMEDY
Runs Hot	Overloading	Load exceeds the capacity of the reducer.	Check rated capacity of reducer, replace with unit of sufficient capacity or reduce load.
	Improper Lubrication	Insufficient lubrication.	Check lubricant level and adjust up to recommended levels.
		Excessive lubrication.	Check lubricant level and adjust down to recommended level.
		Wrong lubricant.	Flush out and refill with correct lubricant as recommended.
Vibration or Noise	Loose Foundation Bolts	Weak mounting structure.	Inspect mounting of reducer. Tighten loose bolts and/or reinforce mounting & structure.
		Loose hold down bolts.	Tighten bolts.
	Worn Disc	Overloading unit may result in damage to disc.	Disassemble and replace disc. Re-check rated capacity of reducer.
	Failure of Bearings	May be due to lack of lubricant.	Replace bearing. Clean and flush reducer and fill with recommended lubricant.
		Overload.	Check rated capacity of reducer, replace with unit of sufficient capacity or reduce load.
	Insufficient Lubricant	Level of lubricant in the reducer not properly maintained.	Check lubricant level and adjust to factory-recommended level.
	Damaged Pins & Rollers	Overloading of reducer.	Disassemble and replace ring gear pins and rollers. Check load on reducer.
Output Shaft Does Not Turn	Motor Shaft Broken	Overloading of reducer can cause damage.	Replace broken shaft. Check rated capacity of reducer.
		Key missing or sheared off on imput shaft.	Replace key.
	Eccentric Bearing Broken	Lack of lubricant.	Replace eccentric bearing. Flush and refill with recommended lubricant.
	Motor Doesn't Turn	Motor	Refer to page 21
Oil Leakage	Worn Seals	Caused by dirt or grit entering seal.	Replace seals. Breather filter may be clogged. Replace or clean filter.
	Leakage Into Motor	Overfilled reducer.	Check lubricant level and adjust to recommended level.
		Vent clogged.	Clean or replace element, being sure to prevent any dirt from falling into the reducer.
		Improper mounting position, such as wall or ceiling mount of horizontal reducer	Mount horizontally or rework reducer to wall or ceiling mount.

MOTOR

SM-CYCLO® Motor Trouble-Shooting and Repair

Problem With The Motor		Possible Causes	Suggested Remedy
Load is disconnected but motor doesn't rotate	Makes a groaning sound	Faulty switch contact	Adjust the contact
		Blown fuse	Replace
		One phase wire of the power supply open	Replace
		Stator coil open	Repair by a specialist
		Stator and rotor touching due to bearing housing wear	Replace the bearing and bracket
	Starts in either direction when turned by hand	Three-phase is operating as single-phase	Check the power source with a voltmeter
	Doesn't make any noise	Stator coil open	Repair by a specialist
		Outside the motor: Power failure Open connection wire Faulty switch contact Faulty starter contact	Contact the power company Check the source wiring Adjust the contact
Rotates with the load disconnected, but:	Rotates in the wrong direction	Connection error	Change any two of the three phase source
	Fuse blows	Shorted lead wire	Replace
	Speed doesn't increase	Faulty starter contact	Adjust
	Groans	Overcurrent/ Overheating — Rotor and stator touching	Repair by a specialist
		Over-current — One phase of stator coil shorted	Replace the stator winding
	Makes a high-pitched metallic noise	Faulty bearing	Replace the bearing
Rotates when the load is disconnected but when the load is connected it:	Switch overheated	Insufficient switch capacity	Replace with one having the rated capacity
		Overload	Drop to the rated load
	Fuse blows	Insufficient fuse capacity	Replace with one having the rated capacity
	Overheats	Overload	Drop to the rated load
		Voltage drop	Consult with the power company
	Speed suddenly drops	Voltage drop	Consult with the power company
		Overload	Drop to the rated load
	Stops	Bearing damaged by overheat	Replace the bearing

Maintenance and Inspection

To insure long life and trouble-free operation, periodic inspection and maintenance of your gearmotor is recommended.

Daily Inspection:

1. Check for loose nuts and bolts.
2. Check for cooling fan air obstruction.
3. Listen for abnormal sounds.
4. Check for abnormal temperature and vibration carefully placing hand on unit (caution: be extremely careful when making direct contact with the unit to avoid burns from abnormal temperatures).
5. Visually check the oil level gauge on the vertical unit, forced-lubricated type. Check lubrication flow by viewing pressure gauge (Part No. 41), whose faulty operation is caused by a lack of lubrication oil, damage to the plunger pump (Part No. 42) or the positive displacement pump (Part No. 43) or the clogging of pipes, etc. In case of faulty operation, stop and inspect the unit immediately.
6. A temperature rise of approximately 105°F above ambient on the surface of the ring gear housing (Part No. 2-01) is allowable if the temperature fluctuation is small. If temperature rises rapidly from stable condition, add the recommended oil or grease (Tables 6 & 12). A rapid temperature rise may be caused from a lack of lubrication. If after lubricating unit, the problem persists, stop operation and consult factory.
7. When abnormal sound is heard from inside the unit, stop operation and inspect the unit.
8. If the lubrication oil leaks, replace the damaged or worn part with new one. (Refer to Part No. 1-04H, Page 3).

Periodic Inspection:

1. Replenish grease in the motor bearings; for quantities, refer to Table 24, Page 15.
2. Check installation resistance in accordance with instructions as shown on Page 14, Note 3.

Ordering Correct Replacement Units Or Parts

The SM-CYCLO® Gearmotor is fully standardized to offer maximum part interchangeability among models of the same frame size. However there are many frame sizes, models, and types in the production range of SM-CYCLO. Therefore to get correct replacement units or parts, proper information to identify the speed reducer in question is essential. The name plate provides this identifying data which is secured to the body of the drive.

By reading the name plate, please give the full description, being sure to include the *SERIAL NUMBER* and *MODEL NUMBER,* to our distributors. Our production records will supply us with all the necessary information so as to provide you with the correct unit or parts if such information is provided.

Name Plate on SM-CYCLO® Gearmotor

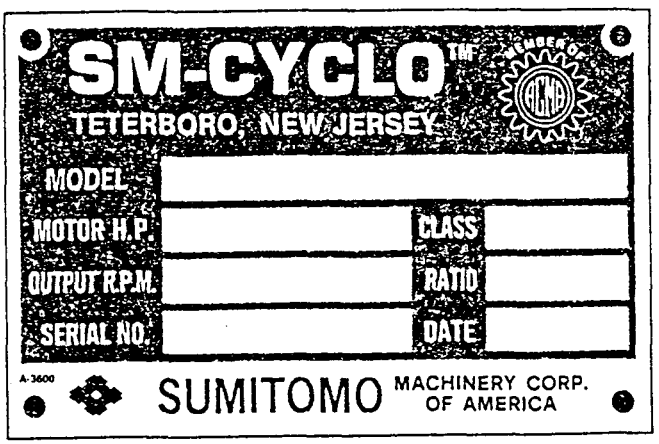

Storage and Operation After Storage

Storage 6 Months–1 Year

Oil-Lubricated

1. Fill unit(s) with 20% of the recommended quantity as shown in Table 14, Page 8 with a rust preventative oil (NP20 or equivalent) or a circulating oil (Shell VSI No. 100 or equivalent).
2. At approximately 3 months interval, change oil as described in No. 1.

Grease-Lubricated

Grease lubricated models do not require any special attention during storage. (Inspect unit before operation.)

Note: For both the Oil-Lubricated and Grease-Lubricated models, if units are to be stored for a period exceeding 1 year, consult factory.

Operation After Storage of 6 Months–1 Year

Oil-Lubricated

1. Completely drain the rust preventive, or circulating oil from unit.
2. Flush unit with the recommended operating oil as shown in Table 12.
3. After flushing, fill the unit to the proper oil level with the recommended lubricating oil.

Grease-Lubricated

Add ½ of the recommended quantity of new grease as shown in Table 8.

Note: Before operation of units stored for periods greater than 1 year, consult factory.

Notes

Lubrication

Date: Performed by:

Replacement of Parts

Date: Performed by:

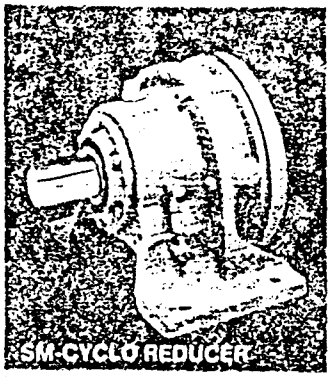

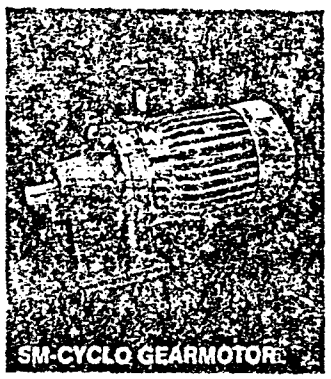

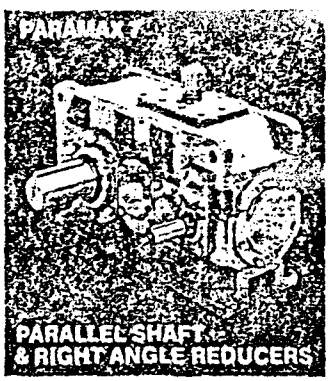

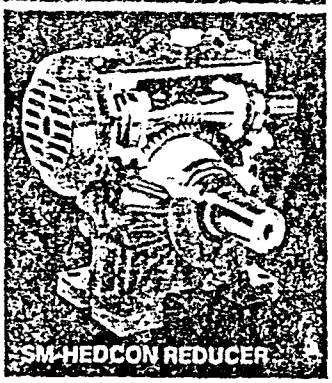

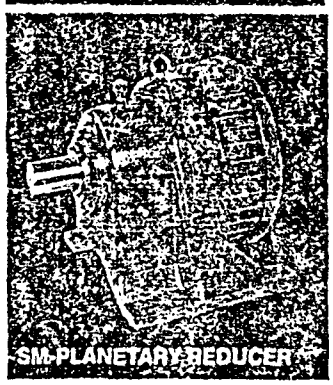

SUMITOMO
THE DRIVING FORCE IN POWER TRANSMISSION

If you specify or buy torque multipliers, Sumitomo Machinery Corp. of America is "The Available Solution." We manufacture the "SM-Cyclo" line of fine cycloidal reducers and gearmotors, able to withstand shock loads to 500% of their ratings, and we warrant them for two full years.

We also ship in 48 hours, if needed, without a premium delivery charge. If you need torque multipliers (Cyclo - Parallel - Right Angle - Worm) from 1/8 HP through 7,000 HP, or have an application problem, call us ... we're "The Available Solution," and we're everywhere in North America ... and the world.

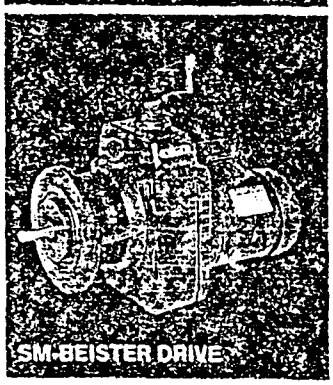

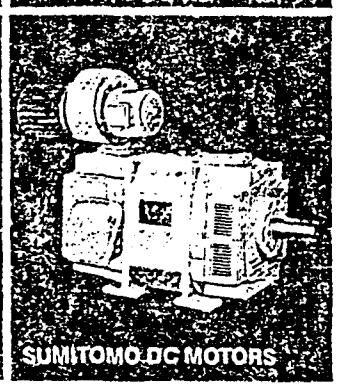

SUMITOMO MACHINERY CORP. OF AMERICA
Power Transmission Products
Seven Malcolm Ave., Teterboro, NJ 07608
(201) 288-3355 • FAX: (201) 342-2925

Manufacturing
Cavalier Industrial Park, Chesapeake, VA 23320

DISTRIBUTED BY:

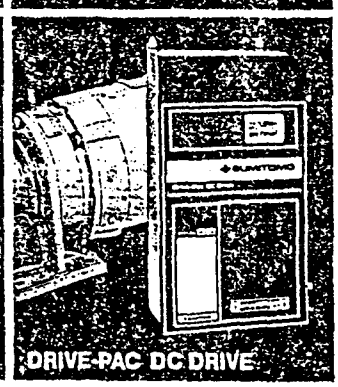

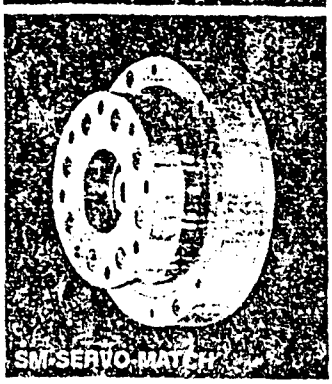

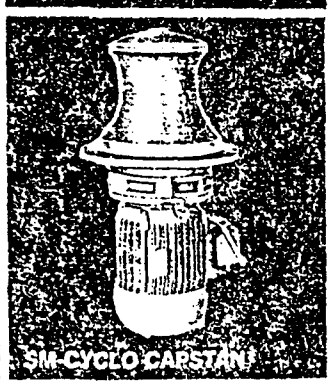

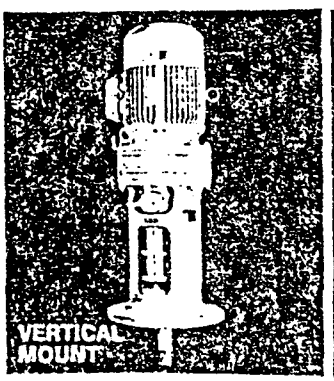

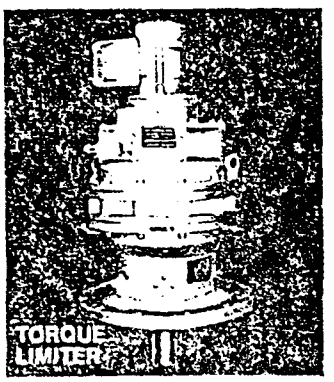

SUMITOMO
MACHINERY CORPORATION OF AMERICA

SM-BEISTER
Dry Traction Drive

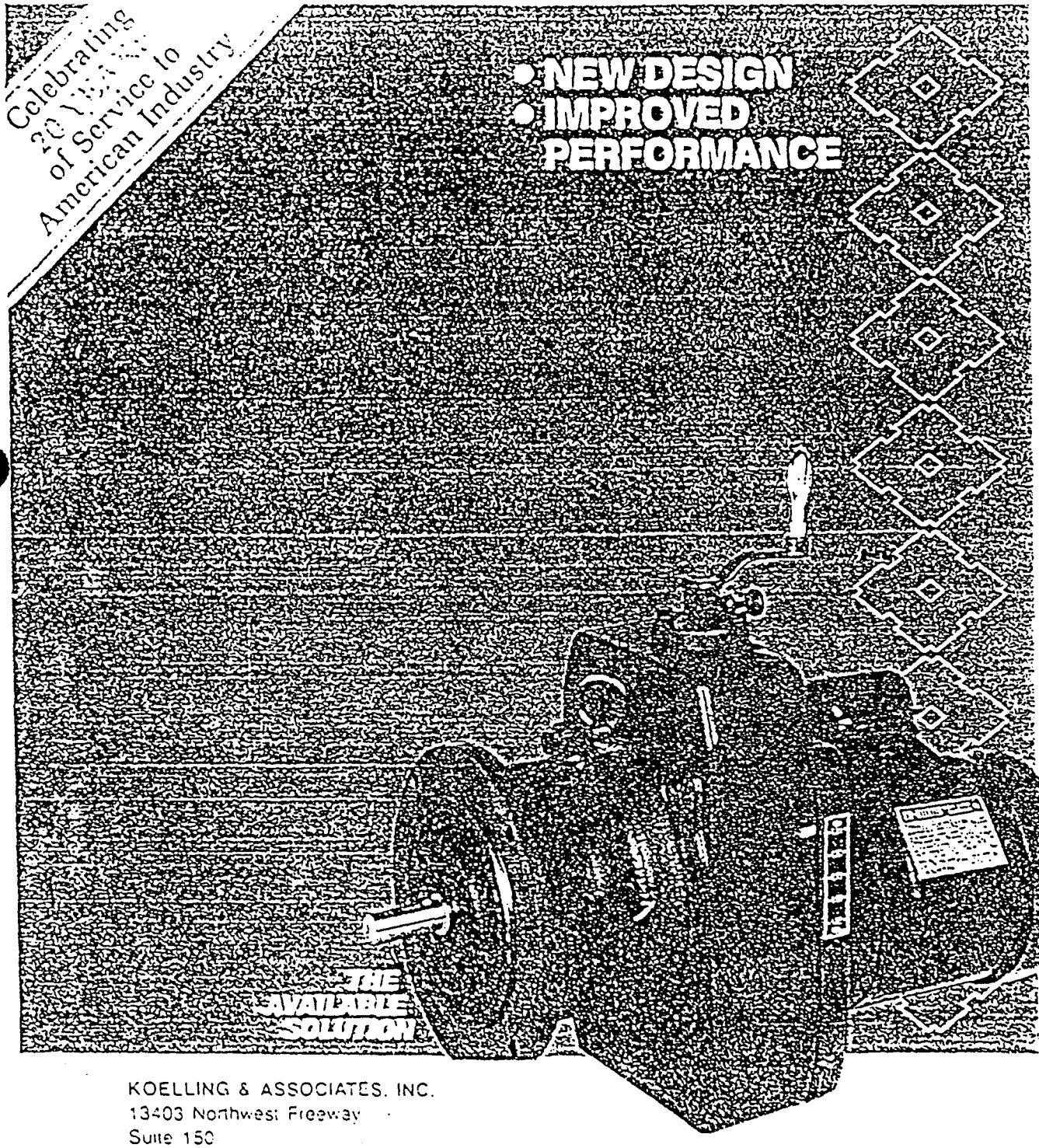

KOELLING & ASSOCIATES, INC.
13403 Northwest Freeway
Suite 150
Houston, TX 77040
713/462-6060
Your SM-CYCLO® Representative

SM-BEISTER DRY TRACTION
Mechanical Adjustable Speed

CONTENTS

RATING TABLE 1
MOTOR DATA 1
OVERHUNG LOAD CAPACITY 1
MODIFICATIONS 1
DIMENSIONS
Foot Mounted & Flange Mounted 2
RATINGS 3-5
DIMENSIONS
SM-BEISTER CYCLO
Integral Design 6-9
Adaptor Type 10-15
SM-BEISTER WORM 16

FEATURES

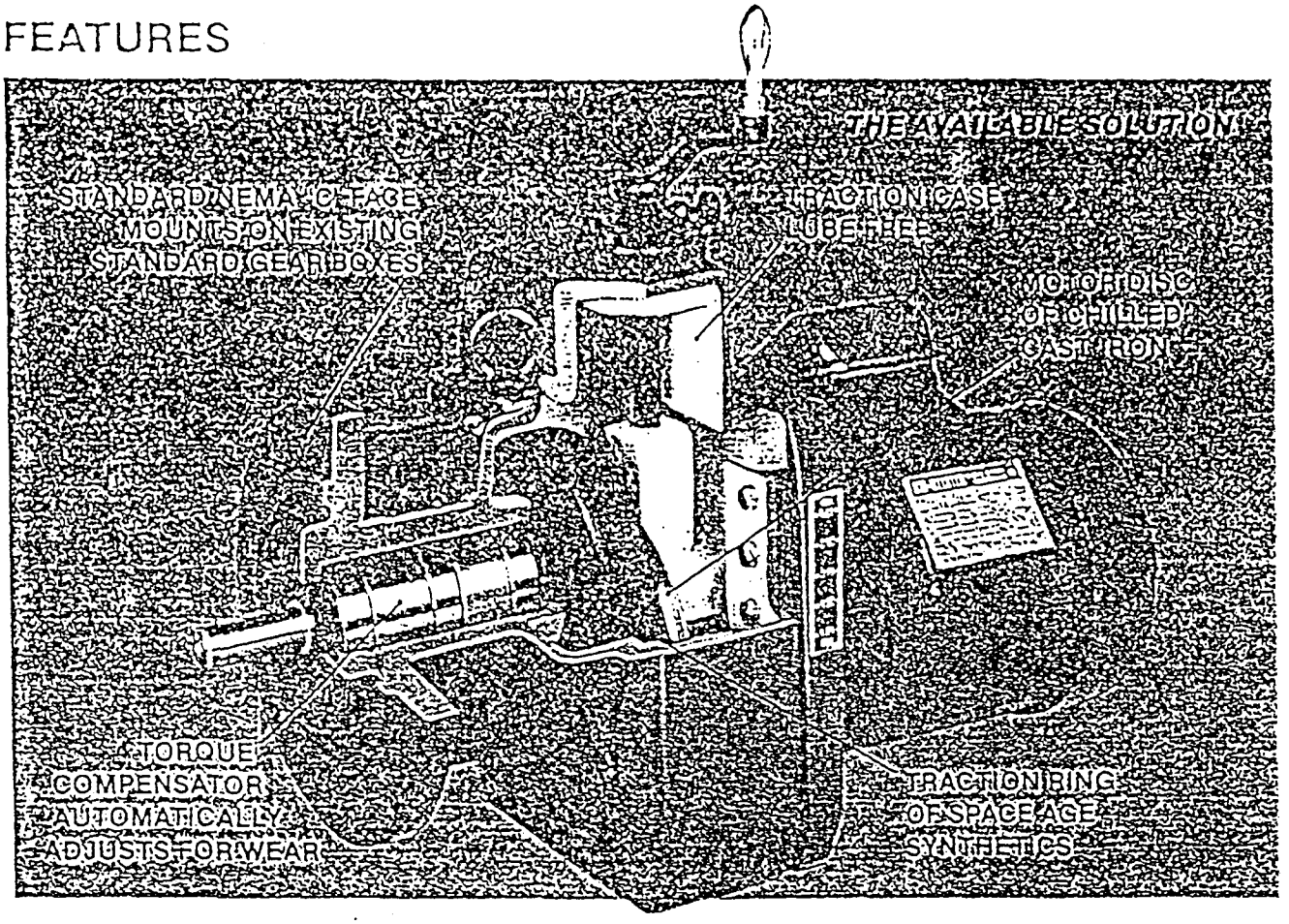

NEW

- RATINGS
- FRAME SIZES
- INTEGRAL DESIGN
- RIGHT ANGLE DESIGN

PERFORMANCE SPECIFICATIONS

- ¼ to 7½ hp, speed range 5:1. Plus 10 hp at 4:1.
- Output speeds 4,000 RPM to 0.10 RPM
- Foot or Flange Mounting
- Output torques to 2,000,000 in. lbs.
- Motor position controlled output speed
- NEMA "C" face output available for plug-in assembly
- Speed indicator standard
- Models available for hostile environment
- 48 hour delivery at no extra charge
- 24 month limited warranty

RATING TABLE

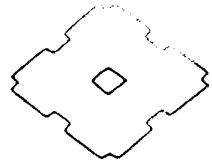

MOTOR HP	MOTOR NUMBER	RATED OUTPUT HP		RATED OUTPUT TORQUE (IN. LB.)		REQUIRED HANDWHEEL REV. NO.	SPEED RANGE RATIO	SPEED RANGE	STANDARD SPEED (RPM)	
		450rpm	2250rpm	450rpm	2250rpm				INPUT	OUTPUT
1/4	2002T	0.20	0.21	78.0	5.88	27.4	5	0.25 – 1.25	1800	450 – 2250
1/2	2005T	0.31	0.42	43.4	11.8					
3/4	2008T	0.31	0.63	43.4	17.6					
1	2010T	0.31	0.84	43.4	23.5					
1.5	2015T	0.62	1.26	86.9	35.3	34.3				
2	2020T	0.62	1.68	86.9	47.1					
3	2030T	1.55	2.52	217	70.6	37.5				
5	2050T	1.55	4.20	217	118					
7.5	2080T	3.11	6.30	435	176	40.8				
10	2100T	(540 rpm) 3.73	8.39	(540 rpm) 435	235	38.8	4.17	0.3 – 1.25		540 – 2250

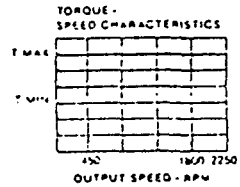

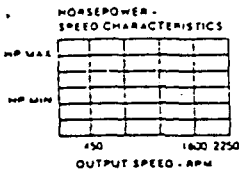

MOTOR DATA

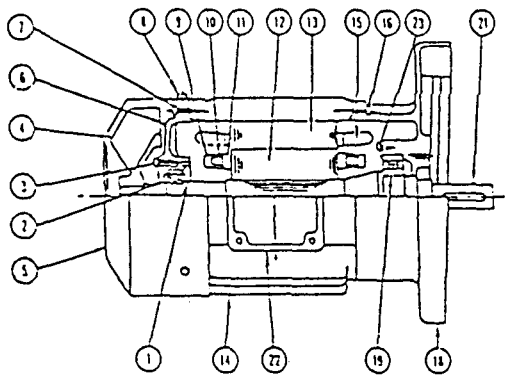

ASSEMBLY

1	HOLDER PLATE
2	BEARING
3	BOLT
4	FAN
5	FAN COVER
6	END BRACKET
7	BOLT
8	BOLT
9	INTERNAL FAN
10	HUB
11	SHORT CIRCUIT RING
12	ROTOR CORE
13	STATIONARY CORE
14	STATOR FRAME
15	STATOR WINDING
16	BOLT
17	N/A
18	BEISTER FLANGE BRACKET
19	BEARING
20	N/A
21	MOTOR SHAFT
22	CONDUIT BOX
23	HOLDER PLATE

CHARACTERISTICS

MOTOR HP	MODEL NUMBER	MOTOR FRAME	FULL LOAD AMPERAGE			CODE LETTER	WR² Lb-Ft²
			230V	460V	208V		
1/4	2002T	M-63	1.1	0.57	1.1	K	0.0178
1/2	2005T	M-71	2.0	0.98	2.0	K	0.0255
3/4	2008T	G-80	2.9	1.4	2.8	M	0.0344
1	2010T	G-80	3.6	1.8	3.5	K	0.0344
1.5	2015T	G-90L	5.1	2.5	5.0	L	0.0676
2	2020T	G-90L	5.0	3.0	6.2	J	0.0676
3	2030T	G-100L	8.5	4.2	9.0	J	0.0949
5	2050T	G-112M	11.9	6.0	13.2	J	0.241
7.5	2080T	G-132S	18.1	9.1	19.8	G	0.575
10	2100T	G-132S	24.2	12.1	26.7	G	0.724

OVERHUNG LOAD CAPACITY (LB.)

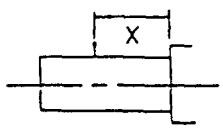

MODEL	2002T 2005T 2008T 2010T	2015T 2020T	2030T 2050T	2080T 2100T
CAPACITY	77	143	176	243

MODIFICATIONS

Specify modification(s) required to suit your specific conditions.

FEATURE	BEISTER™ PORTION					
	ENVIRONMENT CONDITION					
	WEATHER PROOF	HIGH HUMIDITY	WASHDOWN			DUSTY
			LIGHT DTY.	NORM. DTY.	SEVERE DTY.	
EPOXY PAINT			X	X	X	
SEALER AT JOINTS & BOLT HO	X		X	X	X	
SPECIAL RUBBER SEAL	X			X	X	X
WASHDOWN PLATE	X			X	X	X
"O" RING FOR SPD CHANGE PORTION	X		X	X	X	
HEX HEAD PLUG 5.8-18 UNF (HOLE FOR SENSOR)	X		X	X	X	
CHROME PLATED DISC			X		X	
CONDENSATION HOLE FOR CASING	X	X	X	X	X	

FEATURE	MOTOR PORTION			
	ENVIRONMENT CONDITION			
	WEATHER PROOF	HIGH HUMIDITY	WASHDOWN	DUSTY
GASKETED CONDUIT BOX	X	X	X	X
C.I. CONDUIT BOX ③	X		X	X
MOISTURE DRAIN	X	X	X	
EPOXY PAINT			X	
V-RING ON OPP. DRIVE END INSIDE THE FAN	X ①		X	
(DRIP COVER)	O		O	
SPECIAL VARNISH COAT ON WINDING		X ②		

① VERTICAL ONLY
② 90% HUMIDITY & HIGHER
③ OR HVY GAUGE STEEL
O OPTION

DIMENSIONS

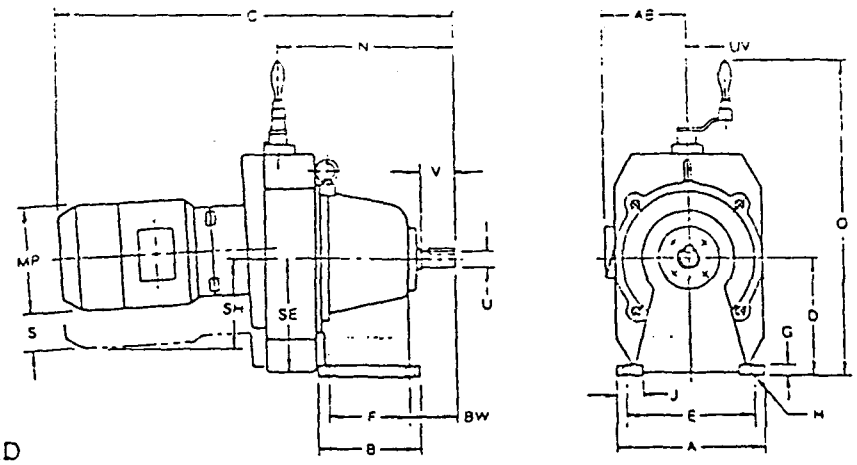

FOOT MOUNTED

MODEL	A	B	C	D	E	F	G	H	J	N	O	S	U	V	KEY	AB	BW	MP	SE	SH	UV	NET WT.
2002TMY	6.69	4.53	17.68	4.921	5.51	3.35	.59	.47	1.48	8.11	12.91	1.89	.625	1.57	3/16 x 3/16	4.80	2.20	5.20	4.80	4.41	1.97	49
2005TMY	6.69	4.53	18.46	4.921	5.51	3.35	.59	.47	1.48	8.11	12.91	1.89	.625	1.57	3/16 x 3/16	4.80	2.20	5.20	4.80	4.41	1.97	55
2008TMY	6.69	4.53	19.88	4.921	5.51	3.35	.59	.47	1.48	8.11	12.91	1.89	.625	1.57	3/16 x 3/16	4.92	2.20	5.94	4.80	4.84	1.97	62
2010TMY	6.69	4.53	19.88	4.921	5.51	3.35	.59	.47	1.48	8.11	12.91	1.89	.625	1.57	3/16 x 3/16	4.92	2.20	5.94	4.80	4.84	1.97	62
2015TMY	8.07	5.32	22.91	6.299	6.89	4.13	.79	.55	1.67	9.61	15.43	2.36	.875	1.97	3/16 x 3/16	5.39	2.62	6.93	6.10	5.75	1.97	108
2020TMY	8.07	5.32	22.91	6.299	6.89	4.13	.79	.55	1.67	9.61	15.43	2.36	.875	1.97	3/16 x 3/16	5.39	2.62	6.93	6.10	5.75	1.97	108
2030TMY	10.24	6.69	26.54	7.874	9.06	5.51	.79	.55	1.77	11.73	18.35	2.95	1.125	2.36	1/4 x 1/4	5.39	3.09	6.93	7.48	6.26	2.48	152
2050TMY	10.24	6.69	28.15	7.874	9.06	5.51	.79	.55	1.77	11.73	18.35	2.95	1.125	2.36	1/4 x 1/4	6.30	3.09	8.46	7.48	7.09	2.48	178
2080TMY	11.81	7.48	32.28	9.842	10.24	5.91	.98	.71	2.36	13.98	24.13	4.02	1.375	3.15	5/16 x 5/16	7.76	4.13	10.16	9.65	8.82	3.15	326
2100TMY	11.81	7.48	33.66	9.842	10.24	5.91	.98	.71	2.36	13.98	24.13	3.82	1.375	3.15	5/16 x 5/16	7.76	4.13	10.16	9.65	8.66	3.15	354

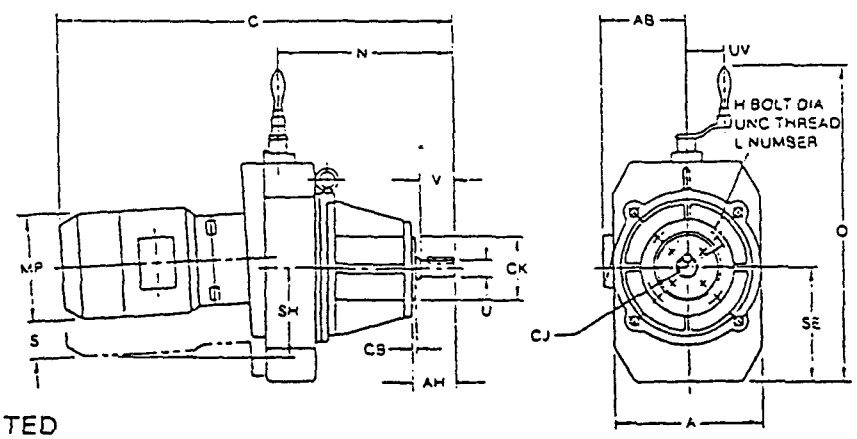

FLANGE MOUNTED

MODEL	A	C	H	L	N	O	U	V	S	AB	AH	CB	CJ	CK	MP	SE	SH	UV	KEY	NET WT.
2002TMCY	6.10	17.68	3/8-16 UNC	4	8.11	12.80	.625	1.57	1.89	4.80	2.13	.16	5.875	4.50	5.20	4.80	4.41	1.97	3/16 x 3/16	49
2005TMCY	6.10	18.46	3/8-16 UNC	4	8.11	12.80	.625	1.57	1.89	4.80	2.13	.16	5.875	4.50	5.20	4.80	4.41	1.97	3/16 x 3/16	55
2008TMCY	6.10	19.88	3/8-16 UNC	4	8.11	12.80	.625	1.57	1.89	4.92	2.13	.16	5.875	4.50	5.94	4.80	4.84	1.97	3/16 x 3/16	62
2010TMCY	6.10	19.88	3/8-16 UNC	4	8.11	12.80	.625	1.57	1.89	4.92	2.13	.16	5.875	4.50	5.94	4.80	4.84	1.97	3/16 x 3/16	62
2015TMCY	8.07	22.91	3/8-16 UNC	4	9.61	15.24	.875	1.97	2.36	5.39	2.13	.16	5.875	4.50	6.93	6.10	5.75	1.97	3/16 x 3/16	99
2020TMCY	8.07	22.91	3/8-16 UNC	4	9.61	15.24	.875	1.97	2.36	5.39	2.13	.16	5.875	4.50	6.93	6.10	5.75	1.97	3/16 x 3/16	99
2030TMCY	9.84	26.54	1/2-13 UNC	4	11.73	17.95	1.125	2.36	2.95	5.39	2.62	.26	7.25	8.50	6.93	7.48	6.26	2.48	1/4 x 1/4	145
2050TMCY	9.84	28.15	1/2-13 UNC	4	11.73	17.95	1.125	2.36	2.95	6.30	2.62	.26	7.25	8.50	8.46	7.48	7.09	2.48	1/4 x 1/4	172
2080TMCY	12.20	32.28	1/2-13 UNC	4	13.99	23.94	1.375	3.15	4.02	7.76	3.13	.26	7.25	8.50	10.16	9.65	8.82	3.15	5/16 x 5/16	309
2100TMCY	12.20	33.86	1/2-13 UNC	4	13.99	23.94	1.375	3.15	3.82	7.76	3.13	.26	7.25	8.50	10.16	9.65	8.66	3.15	5/16 x 5/16	337

RATINGS

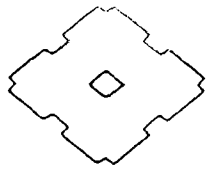

1/4 HP BEISTER-CYCLO

O/P SPEED RANGE		RATIO	OUTPUT TORQUE - IN-LB		INTEGRAL TYPE FRAME SIZE
MIN.	MAX.		AT MIN. SPEED	AT MAX. SPEED	
75	375	6	155	32.7	HTM2002-3090
40.9	205	11	285	59.8	HTM2002-3090
26.5	132	17	440	92.5	HTM2002-3090
15.5	77.6	29	680	158	HTM2002-3090
12.9	64.3	35	680	190	HTM2002-3090
10.5	52.3	43	680	234	HTM2002-3090
7.63	38.1	59	680	321	HTM2002-3090
5.17	25.9	87	870	473	HTM2002-3095
4.41	22.1	102	2440	513	HTM2002-3115/09
3.72	18.6	121	2900	609	HTM2002-3115/09
2.59	12.9	174	3470	875	HTM2002-3115/09
2.41	12.0	187	3470	941	HTM2002-3115/09
2.14	10.7	210	3470	1060	HTM2002-3115/09
1.74	8.72	258	3470	1300	HTM2002-3115/09
1.56	7.79	289	3470	1450	HTM2002-3115/09
1.41	7.05	319	3470	1600	HTM2002-3115/09
1.27	6.36	354	3470	1780	HTM2002-3115/09
1.17	5.84	385	3470	1940	HTM2002-3115/09

1/2 HP BEISTER-CYCLO

O/P SPEED RANGE		RATIO	OUTPUT TORQUE - IN-LB		INTEGRAL TYPE FRAME SIZE
MIN.	MAX.		AT MIN. SPEED	AT MAX. SPEED	
75	375	6	241	65.5	HTM2005-3090
40.9	205	11	442	120	HTM2005-3090
26.5	132	17	650	186	HTM2005-3090
15.5	77.6	29	680	317	HTM2005-3090
12.9	64.3	35	680	382	HTM2005-3090
10.5	52.3	43	870	469	HTM2005-3095
7.63	38.1	59	1340	644	HTM2005-3100
5.17	25.9	87	1735	950	HTM2005-3105
4.41	22.1	102	3470	1030	HTM2005-3115/09
3.72	18.6	121	3470	1220	HTM2005-3115/09
2.59	12.9	174	3470	1760	HTM2005-3115/09
2.41	12.0	187	3470	1890	HTM2005-3115/09
2.14	10.7	210	3470	2120	HTM2005-3115/09
1.74	8.72	258	6250	2600	HTM2005-3145/10
1.56	7.79	289	6250	2920	HTM2005-3145/10
1.41	7.05	319	6250	3220	HTM2005-3145/10
1.27	6.36	354	6250	3570	HTM2005-3145/10
1.17	5.84	385	6250	3890	HTM2005-3145/10

3/4 HP BEISTER-CYCLO

O/P SPEED RANGE		RATIO	OUTPUT TORQUE - IN-LB		INTEGRAL TYPE FRAME SIZE
MIN.	MAX.		AT MIN. SPEED	AT MAX. SPEED	
75	375	6	241	97.7	HTM2008-3090
40.9	205	11	442	179	HTM2008-3090
26.5	132	17	650	277	HTM2008-3090
15.5	77.6	29	870	472	HTM2008-3095
12.9	64.3	35	1340	570	HTM2008-3100
10.5	52.3	43	1340	700	HTM2008-3100
7.63	38.1	59	1735	961	HTM2008-3105
5.17	25.9	87	1735	1420	HTM2008-3105
4.41	22.1	102	3470	1540	HTM2008-3115/09
3.72	18.6	121	3470	1820	HTM2008-3115/09
2.59	12.9	174	6250	2620	HTM2008-3145/10
2.41	12.0	187	6250	2820	HTM2008-3145/10
2.14	10.7	210	6250	3160	HTM2008-3145/10
1.74	8.72	258	6250	3890	HTM2008-3145/10
1.56	7.79	289	6250	4350	HTM2008-3145/10
1.41	7.05	319	6250	4800	HTM2008-3145/10
1.27	6.36	354	6250	5330	HTM2008-3145/10
1.17	5.84	385	6250	5600	HTM2008-3145/10

1 HP BEISTER-CYCLO

O/P SPEED RANGE		RATIO	OUTPUT TORQUE - IN-LB		INTEGRAL TYPE FRAME SIZE
MIN.	MAX.		AT MIN. SPEED	AT MAX. SPEED	
75	375	6	241	130	HTM2010-3095
40.9	205	11	442	239	HTM2010-3095
26.5	132	17	682	370	HTM2010-3095
15.5	77.6	29	1160	630	HTM2010-3100
12.9	64.3	35	1410	761	HTM2010-3105
10.5	52.3	43	1730	935	HTM2010-3105
7.63	38.1	59	1735	1280	HTM2010-3105
4.41	22.1	102	3470	2050	HTM2010-3115/09
3.72	18.6	121	3470	2430	HTM2010-3115/09
2.59	12.9	174	6250	3500	HTM2010-3145/10
2.41	12.0	187	6250	3760	HTM2010-3145/10
2.14	10.7	210	7800	4220	HTM2010-3155/09
1.74	8.72	258	7810	5190	HTM2010-3155/09
1.41	7.05	319	7810	6410	HTM2010-3155/09
1.27	6.36	354	7810	7120	HTM2010-3155/09
1.17	5.84	385	7810	7740	HTM2010-3155/09

RATINGS

1-1/2 HP BEISTER-CYCLO

O/P SPEED RANGE		RATIO	OUTPUT TORQUE - IN-LB		INTEGRAL TYPE FRAME SIZE
MIN.	MAX.		AT MIN. SPEED	AT MAX. SPEED	
75	375	6	482	196	HTM2015-3100
40.9	205	11	884	359	HTM2015-3100
26.5	132	17	1340	555	HTM2015-3100
15.5	77.6	29	1735	947	HTM2015-3105
12.9	64.3	35	2700	1140	HTM2015-3110
10.5	52.3	43	2700	1400	HTM2015-3110
7.63	38.1	59	3470	1930	HTM2015-3115
5.17	25.9	87	6250	2640	HTM2015-3145
4.41	22.1	102	6250	3080	HTM2015-3145/10
3.72	18.6	121	6250	3650	HTM2015-3145/10
2.59	12.9	174	12500	5260	HTM2015-3165/11
2.41	12.0	187	12500	5650	HTM2015-3165/11
2.14	10.7	210	12500	6340	HTM2015-3165/11
1.74	8.72	258	12500	7790	HTM2015-3165/11
1.56	7.79	289	21500	8730	HTM2015-3175/11
1.41	7.05	319	21700	9630	HTM2015-3175/11
1.27	6.36	354	21700	10700	HTM2015-3175/11
1.17	5.84	385	21700	11600	HTM2015-3175/11

2 HP BEISTER-CYCLO

O/P SPEED RANGE		RATIO	OUTPUT TORQUE - IN-LB		INTEGRAL TYPE FRAME SIZE
MIN.	MAX.		AT MIN. SPEED	AT MAX. SPEED	
75	375	6	482	251	HTM2020-3105
40.9	205	11	884	479	HTM2020-3105
26.5	132	17	1370	741	HTM2020-3105
15.5	77.6	29	2330	1260	HTM2020-3110
12.9	64.3	35	2700	1520	HTM2020-3110
10.5	52.3	43	3460	1870	HTM2020-3115
7.63	38.1	59	4740	2570	HTM2020-3140
5.17	25.9	87	6250	3790	HTM2020-3145
4.41	22.1	102	6250	4110	HTM2020-3145/10
3.72	18.6	121	9000	4880	HTM2020-3165/11
2.59	12.9	174	12500	7010	HTM2020-3165/11
2.41	12.0	187	12500	7540	HTM2020-3165/11
2.14	10.7	210	15600	8460	HTM2020-3175/11
1.74	8.72	258	19200	10400	HTM2020-3175/11
1.56	7.79	289	21500	11600	HTM2020-3175/11
1.41	7.05	319	21700	12900	HTM2020-3175/11
1.27	6.36	354	21700	14300	HTM2020-3175/11
1.17	5.84	385	28600	15500	HTM2020-3185/14

3 HP BEISTER-CYCLO

O/P SPEED RANGE		RATIO	OUTPUT TORQUE - IN-LB		INTEGRAL TYPE FRAME SIZE
MIN.	MAX.		AT MIN. SPEED	AT MAX. SPEED	
75	375	6	1200	392	HTM2030-3110
40.9	205	11	2210	718	HTM2030-3110
26.5	132	17	2700	1110	HTM2030-3110
15.5	77.6	29	3470	1890	HTM2030-3115
12.9	64.3	35	3470	2290	HTM2030-3115
10.5	52.3	43	5210	2810	HTM2030-3140
7.63	38.1	59	6250	3850	HTM2030-3145
5.17	25.9	87	10400	5680	HTM2030-3160
4.41	22.1	102	1250	6160	HTM2030-3165/11
3.72	18.6	121	12500	7310	HTM2030-3165/11
2.59	12.9	174	21700	10500	HTM2030-3175/11
2.41	12.0	187	21700	11300	HTM2030-3175/11
2.14	10.7	210	21700	12700	HTM2030-3175/11
1.74	8.72	258	31200	15600	HTM2030-3185/14
1.56	7.79	289	31200	17500	HTM2030-3185/14
1.41	7.05	319	31200	19300	HTM2030-3185/14
1.27	6.36	354	48600	21400	HTM2030-3190/11
1.17	5.84	385	48600	23300	HTM2030-3190/11

5 HP BEISTER-CYCLO

O/P SPEED RANGE		RATIO	OUTPUT TORQUE - IN-LB		INTEGRAL TYPE FRAME SIZE
MIN.	MAX.		AT MIN. SPEED	AT MAX. SPEED	
75	375	6	1200	655	HTM2050-3115
40.9	205	11	2210	1200	HTM2050-3115
26.5	132	17	3410	1860	HTM2050-3115
15.5	77.6	29	5820	3170	HTM2050-3145
12.9	64.3	35	6250	3820	HTM2050-3145
10.5	52.3	43	8630	4690	HTM2050-3160
7.63	38.1	59	10400	6440	HTM2050-3160
5.17	25.9	87	12500	9500	HTM2050-3165
4.41	22.1	102	18900	10300	HTM2050-3175/11
3.72	18.6	121	21700	12200	HTM2050-3175/11
2.59	12.9	174	26000	17600	HTM2050-3185/14
2.41	12.0	187	31200	18900	HTM2050-3185/14
2.14	10.7	210	39000	21200	HTM2050-3190/11
1.74	8.72	258	47900	26000	HTM2050-3195/14
1.56	7.79	289	53700	29200	HTM2050-3195/14
1.41	7.05	319	59200	32200	HTM2050-3195/14
1.27	6.36	354	62500	35700	HTM2050-3195/14
1.17	5.84	385	62500	38900	HTM2050-3195/14

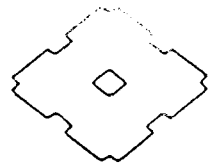

7-1/2 HP BEISTER-CYCLO

O/P SPEED RANGE		RATIO	OUTPUT TORQUE - IN-LB		INTEGRAL TYPE FRAME SIZE
MIN.	MAX.		AT MIN. SPEED	AT MAX. SPEED	
75	375	6	2410	977	HTM2080-3140
40.9	205	11	4430	1790	HTM2080-3140
26.5	132	17	6250	2770	HTM2080-3145
15.5	77.6	29	10400	4720	HTM2080-3160
12.9	64.3	35	10400	5700	HTM2080-3160
10.5	52.3	43	12500	7000	HTM2080-3165
7.63	38.1	59	17400	9610	HTM2080-3170
5.17	25.9	87	21700	14200	HTM2080-3175
4.41	22.1	102	26000	15400	HTM2080-3185/14
3.72	18.6	121	45000	18200	HTM2080-3195/14
2.59	12.9	174	56400	25200	HTM2080-3195/14
2.41	12.0	187	59000	28200	HTM2080-3195/14
2.14	10.7	210	59000	31600	HTM2080-3195/14
1.74	8.72	258	62500	38900	HTM2080-3205/14
1.41	7.05	319	82500	48000	HTM2080-3215/14
1.27	6.36	354	82500	53300	HTM2080-3215/14

10 - HP BEISTER-CYCLO

O/P SPEED RANGE		RATIO	OUTPUT TORQUE - IN-LB		INTEGRAL TYPE FRAME SIZE
MIN.	MAX.		AT MIN. SPEED	AT MAX. SPEED	
75	375	6	2410	1300	HTM2100-3145
40.9	205	11	4430	2380	HTM2100-3145
26.5	132	17	6340	3690	HTM2100-3155
15.5	77.6	29	10400	6290	HTM2100-3160
12.9	64.3	35	10400	7590	HTM2100-3160
10.5	52.3	43	17300	9320	HTM2100-3170
7.63	38.1	59	21700	12800	HTM2100-3175
5.17	25.9	87	21700	18900	HTM2100-3175
4.41	22.1	102	38000	20500	HTM2100-3195/14
3.72	18.6	121	45000	24300	HTM2100-3195/14
2.59	12.9	174	55500	34900	HTM2100-3205/14
1.95	9.74	231	82500	46400	HTM2100-3215/16
1.74	8.72	258	82500	51700	HTM2100-3215/16
1.41	7.05	319	108000	64000	HTM2100-3225/17
1.27	6.36	354	132000	71000	HTM2100-3235/16

DIMENSIONS

SM-BEISTER CYCLO INTEGRAL DESIGN

SINGLE REDUCTION
HORIZONTAL

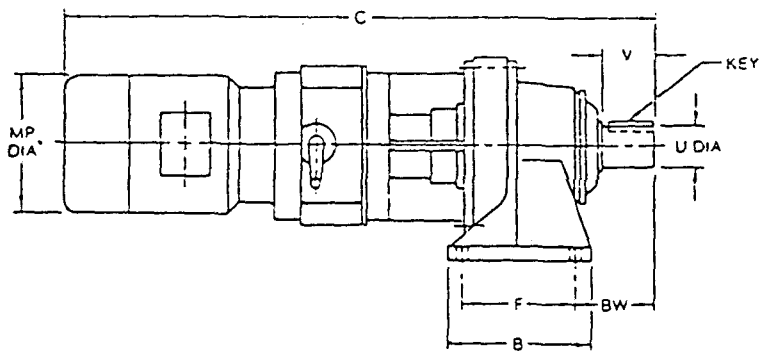

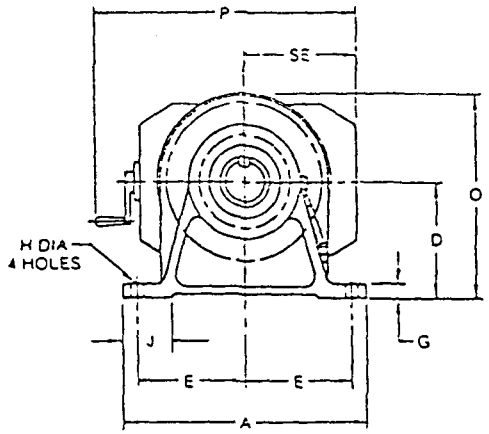

MODEL	A	B	C	D	E	F	G	H	J	O	P	BW	MP	SE	U	V	O/P KEY	NET WT.
HTM2002-$^{3090}_{3095}$	7.09	5.12	22.24	3.937	2.95	3.54	.47	.43	1.57	6.19	12.79	2.36	5.20	4.80	1.125	1.38	1/4 x 1/4 x 1.18	62
HTM2005-$^{3090}_{3095}$	7.09	5.12	23.03	3.937	2.95	3.54	.47	.43	1.57	6.19	12.79	2.36	5.20	4.80	1.125	1.38	1/4 x 1/4 x 1.18	69
HTM2005-$^{3100}_{3105}$	7.09	5.31	23.58	3.937	2.95	3.54	.47	.43	1.57	6.19	12.79	2.36	5.20	4.80	1.125	1.38	1/4 x 1/4 x 1.18	75
HTM2008-$^{3090}_{3095}$	7.09	5.12	24.45	3.937	2.95	3.54	.47	.43	1.57	6.19	12.79	2.36	5.94	4.80	1.125	1.38	1/4 x 1/4 x 1.18	75
HTM2008-$^{3100}_{3105}$	7.09	5.31	25.00	3.937	2.95	3.54	.47	.43	1.57	6.19	12.79	2.36	5.94	4.80	1.125	1.38	1/4 x 1/4 x 1.18	82
HTM2010-$^{3090}_{3095}$	7.09	5.12	24.45	3.937	2.95	3.54	.47	.43	1.57	6.19	12.79	2.36	5.94	4.80	1.125	1.38	1/4 x 1/4 x 1.18	75
HTM2010-$^{3100}_{3105}$	7.09	5.31	25.00	3.937	2.95	3.54	.47	.43	1.57	6.19	12.79	2.36	5.94	4.80	1.125	1.38	1/4 x 1/4 x 1.18	82
HTM2015-$^{3100}_{3105}$	7.09	5.31	27.68	3.937*	2.95	3.54	.47	.43	1.57	6.19	15.23	2.36	6.93	6.10	1.125	1.38	1/4 x 1/4 x 1.18	125
HTM2015-$^{3110}_{3115}$	9.06	6.10	28.98	4.724	3.74	4.53	.59	.55	2.17	8.74	15.23	3.23	6.93	6.10	1.500	2.17	3/8 x 3/8 x 1.77	146
HTM2015-$^{3140}_{3145}$	13.00	7.68	31.10	5.905	5.71	5.71	.87	.71	2.56	10.43	15.23	3.94	6.93	6.10	1.875	2.76	1/2 x 1/2 x 2.17	216
HTM2020-$^{3100}_{3105}$	7.09	5.31	27.68	3.937*	2.95	3.54	.47	.43	1.57	6.89	15.23	2.36	6.93	6.10	1.125	1.38	1/4 x 1/4 x 1.18	125
HTM2020-$^{3110}_{3115}$	9.06	6.10	28.98	4.724	3.74	4.53	.59	.55	2.17	8.74	15.23	3.23	6.93	6.10	1.500	2.17	3/8 x 3/8 x 1.77	146
HTM2020-$^{3140}_{3145}$	13.00	7.68	31.10	5.905	5.71	5.71	.87	.71	2.56	10.43	15.23	3.94	6.93	6.10	1.875	2.76	1/2 x 1/2 x 2.17	167
HTM2030-$^{3110}_{3115}$	9.06	6.10	32.40	4.724*	3.74	4.53	.59	.55	2.17	8.74	17.95	3.23	6.93	7.48	1.500	2.17	3/8 x 3/8 x 1.77	187
HTM2030-$^{3140}_{3145}$	13.00	7.68	34.41	5.905	5.71	5.71	.87	.71	2.56	10.43	17.95	3.94	6.93	7.48	1.875	2.76	1/2 x 1/2 x 2.17	227
HTM2030-$^{3160}_{3165}$	16.14	9.37	36.97	6.299	7.28	5.91	.98	.71	2.95	12.21	17.95	5.47	6.93	7.48	2.250	3.54	1/2 x 1/2 x 2.95	326
HTM2050-$^{3110}_{3115}$	9.06	6.10	34.02	4.724*	3.74	4.53	.59	.55	2.17	8.74	17.95	3.23	8.46	7.48	1.500	2.17	3/8 x 3/8 x 1.77	214
HTM2050-$^{3140}_{3145}$	13.00	7.68	36.02	5.905	5.71	5.71	.87	.71	2.56	10.43	17.95	3.94	8.46	7.48	1.875	2.76	1/2 x 1/2 x 2.17	254
HTM2050-$^{3160}_{3165}$	16.14	9.37	38.58	6.299	7.28	5.91	.98	.71	2.95	12.21	17.95	5.47	8.46	7.48	2.250	3.54	1/2 x 1/2 x 2.95	327
HTM2080-$^{3140}_{3145}$	13.00	7.68	39.49	5.905*	5.71	5.71	.87	.71	2.56	10.43	23.94	3.94	10.16	9.65	1.875	2.76	1/2 x 1/2 x 2.17	397
HTM2080-$^{3160}_{3165}$	16.14	9.37	42.01	6.299	7.28	5.91	.98	.71	2.95	12.21	23.94	5.47	10.16	9.65	2.250	3.54	1/2 x 1/2 x 2.95	470
HTM2080-$^{3170}_{3175}$	16.93	13.19	43.82	7.874	7.48	10.83	1.18	.87	2.52	14.57	23.94	4.92	10.16	9.65	2.750	3.54	5/8 x 5/8 x 3.15	545
HTM2100-$^{3140}_{3145}$	13.00	7.68	41.06	5.905*	5.71	5.71	.87	.71	2.56	10.43	23.94	3.94	10.16	9.65	1.875	2.76	1/2 x 1/2 x 2.17	426
HTM2100-$^{3150}_{3155}$	13.00	7.68	41.85	5.905*	5.71	5.71	.87	.71	2.56	10.43	23.94	4.72	10.16	9.65	1.875	3.54	1/2 x 1/2 x 2.95	428
HTM2100-$^{3160}_{3165}$	16.14	9.37	43.58	6.299	7.28	5.91	.98	.71	2.95	12.21	23.94	5.47	10.16	9.65	2.250	3.54	1/2 x 1/2 x 2.95	499
HTM2100-$^{3170}_{3175}$	16.93	13.19	45.39	7.874	7.48	10.83	1.18	.87	2.52	14.57	23.94	4.92	10.16	9.65	2.750	3.54	5/8 x 5/8 x 3.15	574

*CENTER HEIGHT OF CYCLO IS LESS THAN THAT OF BEISTER

SM-BEISTER CYCLO INTEGRAL DESIGN

SINGLE REDUCTION VERTICAL

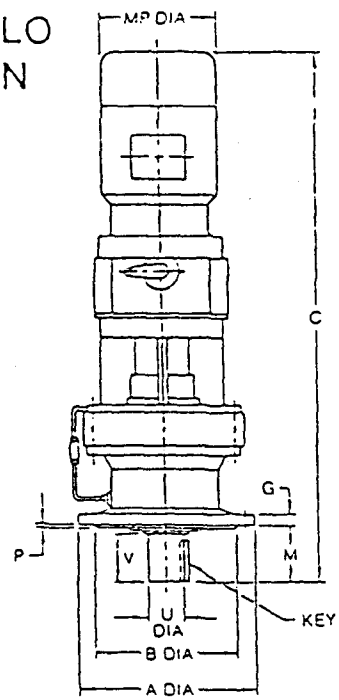

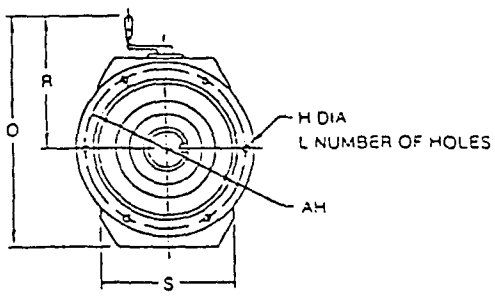

MODEL	A	B	C	G	H	L	M	O	P	R	S	AH	MP	U	V	O/P KEY	NET WT.
VTM2002-$^{3090}_{3095}$	6.30	$^{4.3272}_{4.3293}$	22.24	.35	.43	4	1.89	12.79	.12	7.99	6.10	5.28	5.20	1.125	1.38	1/4 x 1/4 x 1.18	60
VTM2005-$^{3090}_{3095}$	6.30	$^{4.3272}_{4.3293}$	23.03	.35	.43	4	1.89	12.79	.12	7.99	6.10	5.28	5.20	1.125	1.38	1/4 x 1/4 x 1.18	56
VTM2005-$^{3100}_{3105}$	6.30	$^{4.3272}_{4.3293}$	23.58	.35	.43	4	1.89	12.79	.12	7.99	6.10	5.28	5.20	1.125	1.38	1/4 x 1/4 x 1.18	73
VTM2008-$^{3090}_{3095}$	6.30	$^{4.3272}_{4.3293}$	24.45	.35	.43	4	1.89	12.79	.12	7.99	6.10	5.28	5.94	1.125	1.38	1/4 x 1/4 x 1.18	73
VTM2008-$^{3100}_{3105}$	6.30	$^{4.3272}_{4.3293}$	25.00	.35	.43	4	1.89	12.79	.12	7.99	6.10	5.28	5.94	1.125	1.38	1/4 x 1/4 x 1.18	79
VTM2010-$^{3090}_{3095}$	6.30	$^{4.3272}_{4.3293}$	24.45	.35	.43	4	1.89	12.79	.12	7.99	6.10	5.28	5.94	1.125	1.38	1/4 x 1/4 x 1.18	73
VTM2010-$^{3100}_{3105}$	6.30	$^{4.3272}_{4.3293}$	25.00	.35	.43	4	1.89	12.79	.12	7.99	6.10	5.28	5.94	1.125	1.38	1/4 x 1/4 x 1.18	79
VTM2015-$^{3100}_{3105}$	6.30	$^{4.3272}_{4.3293}$	27.68	.35	.43	4	1.89	15.23	.12	9.13	8.07	5.28	6.93	1.125	1.38	1/4 x 1/4 x 1.18	123
VTM2015-$^{3110}_{3115}$	8.27	$^{5.5076}_{5.5101}$	28.96	.51	.43	6	2.72	15.23	.16	9.13	8.07	7.09	6.93	1.500	2.17	3/8 x 3/8 x 1.77	143
VTM2015-$^{3140}_{3145}$	10.24	$^{7.8692}_{7.8720}$	31.10	.59	.43	6	3.00	15.23	.16	9.13	8.07	9.06	6.93	1.875	2.40	1/2 x 1/2 x 2.17	187
VTM2020-$^{3100}_{3105}$	6.30	$^{4.3272}_{4.3293}$	27.68	.35	.43	4	1.89	15.23	.12	9.13	8.07	5.28	6.93	1.125	1.38	1/4 x 1/4 x 1.18	123
VTM2020-$^{3110}_{3115}$	8.25	$^{5.5076}_{5.5101}$	28.98	.51	.43	6	2.72	15.23	.16	9.13	8.07	7.09	6.93	1.500	2.17	3/8 x 3/8 x 1.77	143
VTM2020-$^{3140}_{3145}$	10.24	$^{7.8692}_{7.8720}$	31.10	.59	.43	6	3.00	15.23	.16	9.13	8.07	9.06	6.93	1.875	2.40	1/2 x 1/2 x 2.17	187
VTM2030-$^{3110}_{3115}$	8.27	$^{5.5076}_{5.5101}$	32.40	.51	.43	6	2.72	17.95	.16	10.47	9.84	7.09	6.93	1.500	2.17	3/8 x 3/8 x 1.77	185
VTM2030-$^{3140}_{3145}$	10.24	$^{7.8692}_{7.8720}$	34.41	.59	.43	6	3.00	17.95	.16	10.47	9.84	9.06	6.93	1.875	2.40	1/2 x 1/2 x 2.17	227
VTM2030-$^{3160}_{3165}$	13.39	$^{10.6265}_{10.6277}$	36.97	.79	.43	6	3.50	17.95	.16	10.47	9.84	12.20	6.93	2.250	3.15	1/2 x 1/2 x 2.95	289
VTM2050-$^{3110}_{3115}$	8.27	$^{5.5076}_{5.5101}$	34.02	.51	.43	6	2.72	17.95	.16	10.47	9.84	7.09	8.46	1.500	2.17	3/8 x 3/8 x 1.77	212
VTM2050-$^{3140}_{3145}$	10.24	$^{7.8692}_{7.8720}$	36.02	.59	.43	6	3.00	17.95	.16	10.47	9.84	9.06	8.46	1.875	2.40	1/2 x 1/2 x 2.17	254
VTM2050-$^{3160}_{3165}$	13.39	$^{10.6245}_{10.6277}$	38.58	.79	.43	6	3.50	17.95	.16	10.47	9.84	12.20	8.46	2.250	3.15	1/2 x 1/2 x 2.95	315
VTM2080-$^{3140}_{3145}$	10.24	$^{7.8692}_{7.8720}$	39.49	.59	.43	6	3.00	23.94	.16	14.29	12.20	9.06	10.16	1.875	2.40	1/2 x 1/2 x 2.17	397
VTM2080-$^{3160}_{3165}$	13.39	$^{10.6245}_{10.6277}$	42.01	.79	.43	6	3.50	23.94	.16	14.29	12.20	12.20	10.16	2.250	3.15	1/2 x 1/2 x 2.95	459
VTM2080-$^{3170}_{3175}$	15.75	$^{12.4350}_{12.4385}$	43.82	.87	.55	8	3.70	23.94	.20	14.29	12.20	14.17	10.16	2.750	3.31	5/8 x 5/8 x 3.15	549
VTM2100-$^{3140}_{3145}$	10.24	$^{7.8692}_{7.8720}$	41.06	.59	.43	6	3.00	23.94	.16	14.29	12.20	9.06	10.16	1.875	2.40	1/2 x 1/2 x 2.17	425
VTM2100-$^{3150}_{3155}$	10.24	$^{7.8692}_{7.8720}$	41.85	.59	.43	6	3.78	23.94	.16	14.29	12.20	9.06	10.16	1.875	2.19	1/2 x 1/2 x 2.95	428
VTM2100-$^{3160}_{3165}$	13.39	$^{10.6245}_{10.6277}$	43.58	.79	.43	6	3.50	23.94	.16	14.29	12.20	12.20	10.16	2.250	3.15	1/2 x 1/2 x 2.95	457
VTM2100-$^{3170}_{3175}$	15.75	$^{12.4350}_{12.4385}$	45.39	.87	.55	8	3.70	23.94	.20	14.29	12.20	14.17	10.16	2.750	3.31	5/8 x 5/8 x 3.15	578

DIMENSIONS

SM-BEISTER CYCLO INTEGRAL DESIGN

DOUBLE REDUCTION
HORIZONTAL

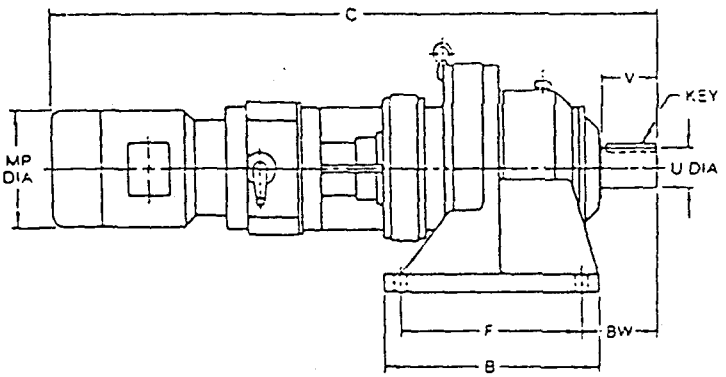

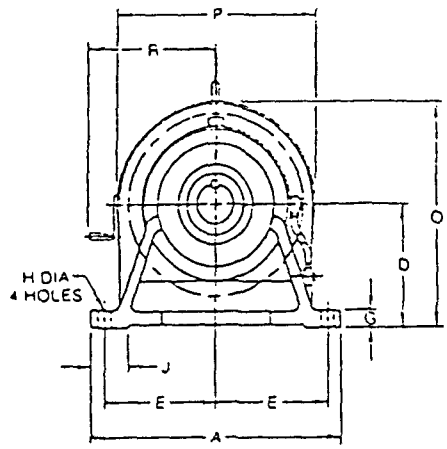

MODEL	A	B	C	D	E	F	G	H	J	O	P	R	BW	MP	U	V	O/P KEY	NET WT.
HTM2002-3115/09	9.06	6.10	25.57	4.724	3.74	4.53	.59	.55	1.57	8.74	8.03	7.99	3.23	5.20	1.500	2.17	3/8 x 3/8 x 1.77	113
HTM2005-3115/09	9.06	6.10	27.36	4.724	3.74	4.53	.59	.55	1.57	8.74	8.03	7.99	3.23	5.20	1.500	2.17	3/8 x 3/8 x 1.77	119
HTM2005-3145/10	13.00	7.68	29.92	5.905	5.71	5.71	.87	.71	2.56	10.43	9.06	7.99	3.94	5.20	1.875	2.76	1/2 x 1/2 x 2.17	172
HTM2008-3115/09	9.06	6.10	28.78	4.724	3.74	4.53	.59	.55	1.57	8.74	8.03	7.99	3.23	5.94	1.500	2.17	3/8 x 3/8 x 1.77	126
HTM2008-3145/10	13.00	7.68	31.34	5.905	5.71	5.71	.87	.71	2.56	10.43	9.06	7.99	3.94	5.94	1.875	2.76	1/2 x 1/2 x 2.17	179
HTM2010-3115/09	9.06	6.10	28.78	4.724	3.74	4.53	.59	.55	1.57	8.74	8.03	7.99	3.23	5.94	1.500	2.17	3/8 x 3/8 x 1.77	126
HTM2010-3145/10	13.00	7.68	31.34	5.905	5.71	5.71	.87	.71	2.56	10.43	9.06	7.99	3.94	5.94	1.875	2.76	1/2 x 1/2 x 2.17	179
HTM2010-3155/09	13.00	7.68	31.58	5.905	5.71	5.71	.87	.71	2.56	10.43	9.06	7.99	4.72	5.94	1.875	3.54	1/2 x 1/2 x 2.95	172
HTM2015-3145/10	13.00	7.68	34.01	5.905	5.71	5.71	.87	.71	2.56	10.43	9.06	9.13	3.94	6.93	1.875	2.76	1/2 x 1/2 x 2.17	216
HTM2015-3165/11	16.14	9.37	36.97	6.299	7.28	5.91	.98	.71	2.95	12.56	12.52	9.13	5.47	6.93	2.250	3.54	1/2 x 1/2 x 2.95	305
HTM2015-3175/11	16.93	13.19	38.82	7.874	7.48	10.83	1.18	.87	2.52	15.00	14.25	9.13	4.92	6.93	2.750	3.54	5/8 x 5/8 x 3.15	370
HTM2020-3145/10	13.00	7.68	34.01	5.905	5.71	5.71	.87	.71	2.56	10.43	9.06	9.13	3.94	6.93	1.875	2.76	1/2 x 1/2 x 2.17	216
HTM2020-3165/11	16.14	9.37	36.97	6.299	7.28	5.91	.98	.71	2.95	12.56	12.52	9.13	5.47	6.93	2.250	3.54	1/2 x 1/2 x 2.95	306
HTM2020-3175/11	16.93	13.19	38.82	7.874	7.48	10.83	1.18	.87	2.52	15.00	14.25	9.13	4.92	6.93	2.750	3.54	5/8 x 5/8 x 3.15	370
HTM2020-3185/14	18.50	14.96	41.18	8.661	8.27	12.60	1.18	.87	2.87	16.34	15.35	9.13	5.71	6.93	3.125	4.33	3/4 x 3/4 x 3.74	462
HTM2030-3165/11	16.14	9.37	40.40	6.299	7.28	5.91	.98	.71	2.95	12.56	12.52	10.47	5.47	6.93	2.250	3.54	1/2 x 1/2 x 2.95	355
HTM2030-3175/11	16.93	13.19	42.25	7.874	7.48	10.83	1.18	.87	2.52	15.00	14.25	10.47	4.92	6.93	2.750	3.54	5/8 x 5/8 x 3.15	419
HTM2030-3185/14	18.50	14.96	44.49	8.661	8.27	12.60	1.18	.87	2.87	16.34	15.35	10.47	5.71	6.93	3.125	4.33	3/4 x 3/4 x 3.74	511
HTM2030-3190/11	20.87	17.32	46.97	9.842	9.45	14.96	1.38	1.02	3.54	18.74	17.76	10.47	6.69	6.93	3.625	5.31	7/8 x 7/8 x 4.92	678
HTM2050-3175/11	16.93	13.19	43.87	7.874	7.48	10.83	1.18	.87	2.52	15.00	14.25	10.47	4.92	8.46	2.750	3.54	5/8 x 5/8 x 3.15	445
HTM2050-3185/14	18.50	14.96	46.10	8.661	8.27	12.60	1.18	.87	2.87	16.34	15.35	10.47	5.71	8.46	3.125	4.33	3/4 x 3/4 x 3.75	537
HTM2050-3190/11	20.87	17.32	48.70	9.842	9.45	14.96	1.38	1.02	3.54	18.74	17.76	10.47	6.69	8.46	3.625	5.31	7/8 x 7/8 x 4.92	704
HTM2050-3195/14	20.87	17.32	49.09	9.842	9.45	14.96	1.38	1.02	3.54	18.74	17.76	10.47	6.69	8.46	3.625	5.31	7/8 x 7/8 x 4.92	724
HTM2060-3185/14	18.50	14.96	49.57	8.661	8.27	12.60	1.18	.87	2.87	16.34	15.35	14.29	5.71	10.16	3.125	4.33	3/4 x 3/4 x 3.75	672
HTM2080-3195/14	20.87	17.32	52.56	9.842	9.45	14.96	1.38	1.02	3.54	18.75	17.76	14.29	6.69	10.16	3.625	5.31	7/8 x 7/8 x 4.92	839
HTM2080-3205/14	20.87	17.32	54.61	9.842	8.66	14.17	1.38	1.02	3.94	20.87	18.54	14.29	8.46	10.16	3.875	6.50	1 x 1 x 6.50	890
HTM2080-3215/14	22.83	18.70	55.63	10.433	9.45	15.55	1.57	1.02	4.33	22.64	19.96	14.29	8.27	10.16	4.250	6.50	1 x 1 x 6.50	1045
HTM2100-3195/14	20.87	17.32	54.13	9.842	9.45	14.96	1.38	1.02	3.54	18.75	17.76	14.29	6.69	10.16	3.625	5.31	7/8 x 7/8 x 4.92	857
HTM2100-3205/14	20.87	17.32	56.18	9.842	8.66	14.17	1.38	1.02	3.94	20.87	18.54	14.29	8.46	10.16	3.875	6.50	1 x 1 x 6.50	918
HTM2100-3215/16	22.83	18.70	55.02	10.433	9.45	15.55	1.57	1.02	4.33	22.64	19.96	14.29	8.27	10.16	4.250	6.50	1 x 1 x 6.50	1125
HTM2100-3225/17	24.41	20.47	60.47	11.024	10.83	16.54	1.57	1.30	4.53	24.02	21.61	14.29	9.06	10.16	4.625	6.50	1-1/4 x 7/8 x 6.50	1250
HTM2100-3235/16	26.38	22.05	62.05	11.811	11.42	18.11	1.77	1.30	4.72	26.38	23.27	14.29	10.24	10.16	5.000	7.87	1-1/4 x 7/8 x 7.87	1550

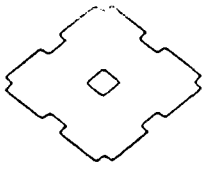

SM-BEISTER CYCLO INTEGRAL DESIGN

DOUBLE REDUCTION VERTICAL

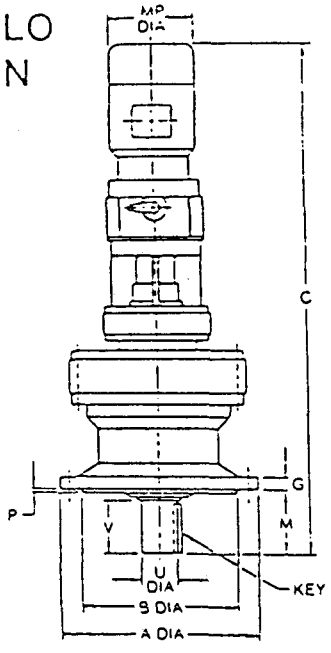

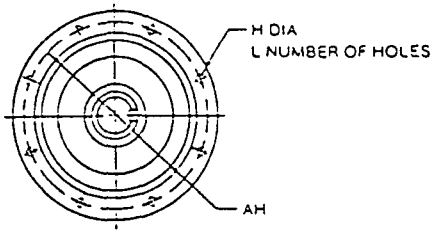

MODEL	A	B	C	G	H	L	M	P	AH	MP	U	V	O/P KEY	NET WT.
VTM2002-3115/09	8.27	5.5101/5.5076	26.57	.51	.43	6	2.72	.16	7.09	5.20	1.500	2.17	3/8 x 3/8 x 1.77	110
VTM2005-3115/09	8.27	5.5101/5.5076	27.36	.51	.43	6	2.72	.16	7.09	5.20	1.500	2.17	3/8 x 3/8 x 1.77	116
VTM2005-3145/10	10.24	7.8692/7.8720	29.92	.59	.43	6	3.00	.16	9.06	5.20	1.875	2.40	1/2 x 1/2 x 2.17	170
VTM2008-3115/09	8.27	5.5101/5.5076	26.78	.51	.43	6	2.72	.16	7.09	5.94	1.500	2.17	3/8 x 3/8 x 1.77	123
VTM2008-3145/10	10.24	7.8692/7.8720	31.34	.59	.43	6	3.00	.16	9.06	5.94	1.875	2.40	1/2 x 1/2 x 2.17	177
VTM2010-3115/09	8.27	5.5101/5.5076	26.78	.51	.43	6	2.72	.16	7.09	5.94	1.500	2.17	3/8 x 3/8 x 1.77	123
VTM2010-3145/10	10.24	7.8692/7.8720	31.34	.59	.43	6	3.00	.16	9.06	5.94	1.875	2.40	1/2 x 1/2 x 2.17	177
VTM2010-3155/09	10.24	7.8692/7.8720	31.58	.59	.43	6	3.78	.16	9.06	5.94	1.875	3.19	1/2 x 1/2 x 2.95	170
VTM2015-3145/10	10.24	7.8692/7.8720	34.01	.59	.43	6	3.00	.16	9.06	6.93	1.875	2.40	1/2 x 1/2 x 2.17	214
VTM2015-3165/11	13.39	10.6245/10.6277	36.97	.79	.43	6	3.50	.16	12.20	6.93	2.250	3.15	1/2 x 1/2 x 2.95	295
VTM2015-3175/11	15.75	12.4350/12.4385	38.82	.87	.55	8	3.70	.20	14.17	6.93	2.750	3.31	5/8 x 5/8 x 3.15	373
VTM2020-3145/10	10.24	7.8692/7.8720	34.01	.59	.43	6	3.00	.16	9.06	6.93	1.875	2.40	1/2 x 1/2 x 2.17	214
VTM2020-3165/11	13.39	10.6245/10.6277	36.97	.79	.43	6	3.50	.16	12.20	6.93	2.250	3.15	1/2 x 1/2 x 2.95	295
VTM2020-3175/11	15.75	12.4350/12.4385	38.82	.87	.55	8	3.70	.20	14.17	6.93	2.750	3.31	5/8 x 5/8 x 3.15	373
VTM2020-3185/14	16.93	13.5768/13.5803	41.18	.87	.71	8	4.33	.20	15.35	6.93	3.125	3.94	3/4 x 3/4 x 3.74	463
VTM2030-3165/11	13.39	10.6245/10.6277	40.40	.79	.43	6	3.50	.16	12.20	6.93	2.250	3.15	1/2 x 1/2 x 2.95	344
VTM2030-3175/11	15.75	12.4350/12.4385	42.25	.87	.55	8	3.70	.20	14.17	6.93	2.750	3.31	5/8 x 5/8 x 3.15	422
VTM2030-3185/14	16.93	13.5768/13.5803	44.49	.87	.71	8	4.33	.20	15.35	6.93	3.125	3.94	3/4 x 3/4 x 3.74	512
VTM2030-3190/11	19.29	15.7421/15.7456	46.97	1.18	.71	12	5.71	.24	17.72	6.93	3.625	4.92	7/8 x 7/8 x 4.92	646
VTM2050-3175/11	15.75	12.4350/12.4385	43.87	.87	.55	8	3.70	.20	14.17	8.46	2.750	3.31	5/8 x 5/8 x 3.15	448
VTM2050-3185/14	16.93	13.5768/13.5803	46.10	.87	.71	8	4.33	.20	15.35	8.46	3.125	3.94	3/4 x 3/4 x 3.74	538
VTM2050-3190/11	19.29	15.7421/15.7456	48.70	1.18	.71	12	5.71	.24	17.72	8.46	3.625	4.92	7/8 x 7/8 x 4.92	672
VTM2050-3195/14	19.29	15.7421/15.7456	49.09	1.18	.71	12	5.71	.24	17.72	8.46	3.625	4.92	7/8 x 7/8 x 4.92	692
VTM2080-3185/14	16.97	13.5768/13.5803	49.57	.87	.71	8	4.33	.20	15.35	10.16	3.125	3.94	3/4 x 3/4 x 3.74	673
VTM2080-3195/14	19.29	15.7421/15.7456	57.56	1.19	.71	12	5.71	.24	17.72	10.16	3.625	4.92	7/8 x 7/8 x 4.92	827
VTM2080-3205/14	17.91	13.9704/13.9739	54.61	1.18	.87	8	8.03	.20	15.94	10.16	3.875	6.50	1 x 1 x 6.50	862
VTM2080-3215/14	19.29	15.3484/15.3519	55.63	1.38	.94	8	8.00	.28	17.32	10.16	4.250	6.50	1 x 1 x 6.50	998
VTM2100-3195/14	19.29	15.7421/15.7456	54.13	1.18	.71	12	5.71	.24	17.72	10.16	3.625	4.92	7/8 x 7/8 x 4.92	855
VTM2100-3105/14	17.91	13.9704/13.9739	56.18	1.18	.87	8	8.03	.20	15.94	10.16	3.875	6.50	1 x 1 x 6.50	890
VTM2100-3215/16	19.29	15.3484/15.3519	58.02	1.38	.94	8	8.00	.28	17.32	10.16	4.250	6.50	1 x 1 x 6.50	1081
VTM2100-3225/17	21.06	16.3321/16.3359	60.47	1.38	1.06	8	8.27	.39	18.70	10.16	4.625	6.50	1-1/4 x 7/8 x 6.50	1232
VTM2100-3235/18	22.44	17.3160/17.3199	62.09	1.57	1.06	8	8.66	.39	20.08	10.16	5.000	6.50	1-1/4 x 7/8 x 6.50	1427

DIMENSIONS

SM-BEISTER CYCLO ADAPTOR TYPE

SINGLE REDUCTION
HORIZONTAL

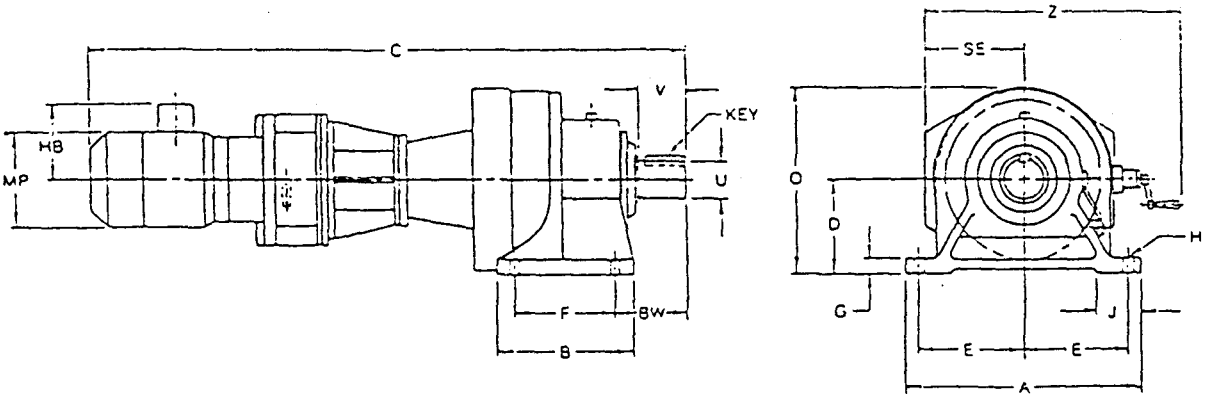

MODEL	A	B	C	D	E	F	G	H	J	O	P	BW	OUTPUT SHAFT U	V	KEY	AB	MP	SE	Z	HP	NET WT.
HC3095 • 2002TMCY	7.09	5.12	26.12	3.937	2.95	3.54	47	.43	1.57	8.15	5.91	2.36	1.125	1.38	1/4 x 1/4 x 1-1/16	4.80	5.20	4.80	12.80	1/4	81
HC3095 • 2005TMCY	7.09	5.12	26.50	3.937	2.95	3.54	47	.43	1.57	8.15	5.91	2.36	1.125	1.38	1/4 x 1/4 x 1-1/16	4.80	5.20	4.80	12.80	1/2	87
HC3095 • 2008TMCY	7.09	5.12	28.32	3.937	2.95	3.54	47	.43	1.57	8.15	5.91	2.36	1.125	1.38	1/4 x 1/4 x 1-1/16	4.92	5.94	4.80	12.80	3/4	94
HC3095 • 2010TMCY	7.09	5.12	28.32	3.937	2.95	3.54	47	.43	1.57	8.15	5.91	2.36	1.125	1.38	1/4 x 1/4 x 1-1/16	4.92	5.94	4.80	12.80	1	94
HC3100 • 2005TMCY	7.09	5.31	27.14	3.937	2.95	3.54	.47	.43	1.57	8.15	5.91	2.36	1.125	1.38	1/4 x 1/4 x 1-1/16	4.80	5.20	4.80	12.80	1/2	91
HC3100 • 2008TMCY	7.09	5.31	28.56	3.937	2.95	3.54	.47	.43	1.57	8.15	5.91	2.36	1.125	1.38	1/4 x 1/4 x 1-1/16	4.92	5.94	4.80	12.80	3/4	98
HC3100 • 2010TMCY	7.09	5.31	28.56	3.937	2.95	3.54	.47	.43	1.57	8.15	5.91	2.36	1.125	1.38	1/4 x 1/4 x 1-1/16	4.92	5.94	4.80	12.80	1	99
HC3100 • 2015TMCY	7.09	5.31	31.59	3.937*	2.95	3.54	.47	.43	1.57	8.15	5.91	2.36	1.125	1.38	1/4 x 1/4 x 1-1/16	5.39	6.93	6.10	15.24	1-1/2	135
HC3105 • 2020TMCY	7.09	5.31	31.59	3.937*	2.95	3.54	.47	.43	1.57	8.15	5.91	2.36	1.125	1.38	1/4 x 1/4 x 1-1/16	5.39	6.93	6.10	15.24	2	135
HC3110 • 2015TMCY	9.06	6.10	33.59	4.724	3.74	4.53	.59	.55	2.17	10.12	8.03	3.23	1.500	2.17	3/8 x 3/8 x 1-7/7	5.39	6.93	6.10	15.24	1-1/2	165
HC3110 • 2020TMCY	9.06	6.10	33.59	4.724	3.74	4.53	.59	.55	2.17	10.12	8.03	3.23	1.500	2.17	3/8 x 3/8 x 1-7/7	5.39	6.93	6.10	15.24	2	165
HC3110 • 2030TMCY	9.06	6.10	37.49	4.724*	3.74	4.53	.59	.55	2.17	10.12	8.03	3.23	1.500	2.17	3/8 x 3/8 x 1-7/7	5.39	6.93	7.48	17.95	3	214
HC3115 • 2010TMCY	9.06	6.10	30.56	4.724	3.74	4.53	.59	.55	2.17	10.12	8.03	3.23	1.500	2.17	3/8 x 3/8 x 1-7/7	4.92	5.94	4.80	12.80	1	128
HC3115 • 2050TMCY	9.06	6.10	39.10	4.724*	3.74	4.53	.59	.55	2.17	10.12	8.03	3.23	1.500	2.17	3/8 x 3/8 x 1-7/7	6.30	8.46	7.48	17.95	5	240
HC3145 • 2015TMCY	13.0	7.68	36.04	5.905	5.71	5.71	.87	.71	2.56	11.81	9.06	3.94	1.875	2.76	1/2 x 1/2 x 1-3/8	5.39	6.93	6.10	15.24	1-1/2	216
HC3145 • 2020TMCY	13.0	7.68	36.04	5.905	5.71	5.71	.87	.71	2.56	11.81	9.06	3.94	1.875	2.76	1/2 x 1/2 x 1-3/8	5.39	6.93	6.10	15.24	2	216
HC3145 • 2030TMCY	13.0	7.68	39.93	5.905	5.71	5.71	.87	.71	2.56	11.81	9.06	3.94	1.875	2.76	1/2 x 1/2 x 1-3/8	5.39	6.93	7.48	17.95	3	265
HC3145 • 2080TMCY	13.0	7.68	45.78	5.905*	5.71	5.71	.87	.71	2.56	11.81	9.06	3.94	1.875	2.76	1/2 x 1/2 x 1-3/8	7.76	10.16	9.65	23.94	7-1/2	426
HC3145 • 2050TMCY	13.0	7.68	41.54	5.905	5.71	5.71	.87	.71	2.56	11.81	9.06	3.94	1.875	2.76	1/2 x 1/2 x 1-3/8	6.30	8.46	7.48	17.95	5	291
HC3145 • 2100TMCY	13.0	7.68	47.36	5.905*	5.71	5.71	.87	.71	2.56	11.81	9.06	3.94	1.875	2.76	1/2 x 1/2 x 1-3/8	7.76	10.16	9.65	23.94	10	454
HC3150 • 2015TMCY	13.0	7.68	36.82	5.905	5.71	5.71	.87	.71	2.56	11.81	9.06	4.72	1.875	3.54	1/2 x 1/2 x 1-3/8	5.39	6.93	6.10	15.24	1-1/2	218
HC3155 • 2020TMCY	13.0	7.68	36.82	5.905	5.71	5.71	.87	.71	2.56	11.81	9.06	4.72	1.875	3.54	1/2 x 1/2 x 1-3/8	5.39	6.93	6.10	15.24	2	218
HC3155 • 2030TMCY	13.0	7.68	40.72	5.905	5.71	5.71	.87	.71	2.56	11.81	9.06	4.72	1.875	3.54	1/2 x 1/2 x 1-3/8	5.39	6.93	7.48	17.95	3	267
HC3155 • 2100TMCY	13.0	7.68	48.14	5.905*	5.71	5.71	.87	.71	2.56	11.81	9.06	4.72	1.875	3.54	1/2 x 1/2 x 1-3/8	7.76	10.16	9.65	23.94	10	456
HC3160 • 2030TMCY	16.14	9.37	43.55	6.299	7.28	5.91	.98	.71	2.95	12.56	12.52	5.47	2.250	3.54	1/2 x 1/2 x 1-3/8	5.39	6.93	7.48	17.95	3	385
HC3160 • 2050TMCY	16.14	9.37	45.16	6.299	7.28	5.91	.98	.71	2.95	12.56	12.52	5.47	2.250	3.54	1/2 x 1/2 x 1-3/8	6.30	8.46	7.48	17.95	5	411
HC3160 • 2080TMCY	16.14	9.37	49.40	6.299	7.28	5.91	.98	.71	2.95	12.56	12.52	5.47	2.250	3.54	1/2 x 1/2 x 1-3/8	7.76	10.16	9.65	23.94	7-1/2	546
HC3160 • 2100TMCY	16.14	9.37	50.98	6.299	7.28	5.91	.98	.71	2.95	12.56	12.52	5.47	2.250	3.54	1/2 x 1/2 x 1-3/8	7.76	10.16	9.65	23.94	10	574
HC3170 • 2050TMCY	16.93	13.19	47.68	7.874	7.48	10.83	1.18	.87	2.52	15.00	14.25	4.92	2.750	3.54	3/8 x 3/8 x 1-3/4	6.30	8.46	7.48	17.95	5	483
HC3170 • 2080TMCY	16.93	13.19	51.92	7.874	7.48	10.83	1.18	.87	2.52	15.00	14.25	4.92	2.750	3.54	3/8 x 3/8 x 1-3/4	7.76	10.16	9.65	23.94	7-1/2	618
HC3170 • 2100TMCY	16.93	13.19	53.50	7.874	7.48	10.83	1.18	.87	2.52	15.00	14.25	4.92	2.750	3.54	3/8 x 3/8 x 1-3/4	7.76	10.16	9.65	23.94	10	646

*Note that dimension A = Z is larger than dimension D

SM-BEISTER CYCLO ADAPTOR TYPE

SINGLE REDUCTION
VERTICAL

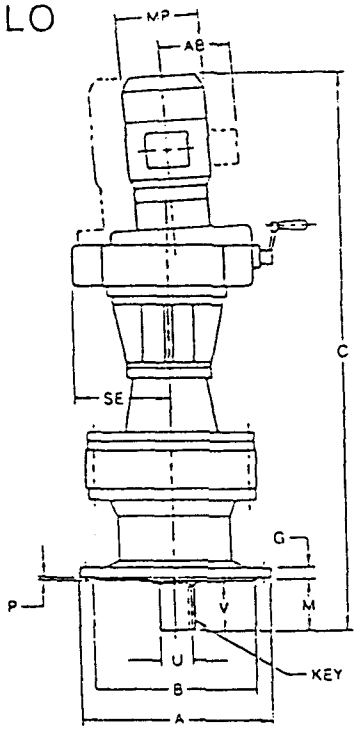

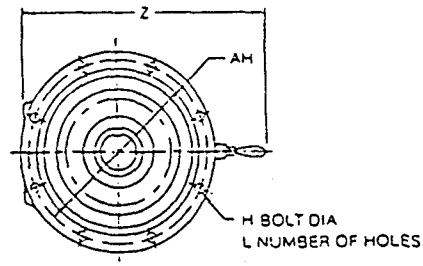

MODEL	A	B	C	G	H	L	M	P	AH	X	Y	OUTPUT SHAFT U	V	KEY	AB	MP	SE	Z	HP	NET WT.
HC3060 • 2002TMCY	6.30	4.3277	26.12	.35	43	4	1.89	.12	5.28	4.21	—	1.125	1.38	1/4 x 1/4 x 1.18	4.80	5.20	4.80	12.80	1/4	76
HC3060 • 2005TMCY	6.30	4.3277	26.90	.35	43	4	1.89	.12	5.28	4.21	—	1.125	1.38	1/4 x 1/4 x 1.18	4.80	5.20	4.80	12.80	1/2	82
HC3060 • 2008TMCY	6.30	4.3277	28.32	.35	43	4	1.89	.12	5.28	4.21	—	1.125	1.38	1/4 x 1/4 x 1.18	4.92	5.94	4.80	12.80	3/4	89
HC3095 • 2010TMCY	6.30	4.3277	28.32	.35	43	4	1.89	.12	5.28	4.21	—	1.125	1.38	1/4 x 1/4 x 1.18	4.92	5.94	4.80	12.80	1	89
HC3100 • 2005TMCY	6.30	4.3277	27.14	.35	43	4	1.89	.12	5.28	4.21	—	1.125	1.38	1/4 x 1/4 x 1.18	4.80	5.20	4.80	12.80	1/2	87
HC3100 • 2008TMCY	6.30	4.3277	28.56	.35	43	4	1.89	.12	5.28	4.21	—	1.125	1.38	1/4 x 1/4 x 1.18	4.92	5.94	4.80	12.80	3/4	94
HC3100 • 2010TMCY	6.30	4.3277	28.56	.35	43	4	1.89	.12	5.28	4.21	—	1.125	1.38	1/4 x 1/4 x 1.18	4.92	5.94	4.80	12.80	1	94
HC3100 • 2015TMCY	6.30	4.3277	31.59	.35	43	4	1.89	.12	5.28	4.21	—	1.125	1.38	1/4 x 1/4 x 1.18	5.39	6.93	6.10	15.24	1-1/2	131
HC3105 • 2020TMCY	6.30	4.3277	31.59	.35	43	4	1.89	.12	5.28	4.21	—	1.125	1.38	1/4 x 1/4 x 1.18	5.39	6.93	6.10	15.24	2	131
HC3115 • 2010TMCY	8.27	5.5076	30.56	.51	43	6	2.72	.16	7.09	5.39	—	1.500	2.17	3/8 x 3/8 x 1.77	4.92	5.94	4.80	12.80	1	126
HC3110 • 2015TMCY	8.27	5.5076	33.59	.51	43	6	2.72	.16	7.09	5.39	—	1.500	2.17	3/8 x 3/8 x 1.77	5.39	6.93	6.10	15.24	1-1/2	163
HC3110 • 2020TMCY	8.27	5.5076	33.59	.51	43	6	2.72	.16	7.09	5.39	—	1.500	2.17	3/8 x 3/8 x 1.77	5.39	6.93	6.10	15.24	2	163
HC3110 • 2030TMCY	8.27	5.5076	37.49	.51	43	6	2.72	.16	7.09	5.39	—	1.500	2.17	3/8 x 3/8 x 1.77	5.39	6.93	7.48	17.95	3	212
HC3115 • 2050TMCY	8.27	5.5076	39.10	.51	43	6	2.72	.16	7.09	5.39	—	1.500	2.17	3/8 x 3/8 x 1.77	6.30	8.46	7.48	17.95	5	238
HC3145 • 2015TMCY	10.24	7.8647	36.04	.59	43	6	3.00	.16	9.06	5.98	8.23	1.875	2.40	1/2 x 1/2 x 2.17	5.39	6.93	6.10	15.24	1-1/2	214
HC3140 • 2020TMCY	10.24	7.8647	36.04	.59	43	6	3.00	.16	9.06	5.98	8.23	1.875	2.40	1/2 x 1/2 x 2.17	5.39	6.93	6.10	15.24	2	214
HC3140 • 2030TMCY	10.24	7.8647	39.93	.59	43	6	3.00	.16	9.06	5.98	8.23	1.875	2.40	1/2 x 1/2 x 2.17	5.39	6.93	7.48	17.95	3	263
HC3140 • 2080TMCY	10.24	7.8647	45.78	.59	43	6	3.00	.16	9.06	5.98	8.23	1.875	2.40	1/2 x 1/2 x 2.17	7.76	10.16	9.65	23.94	7-1/2	424
HC3145 • 2050TMCY	10.24	7.8647	41.54	.59	43	6	3.00	.16	9.06	5.98	8.23	1.875	2.40	1/2 x 1/2 x 2.17	6.30	8.46	7.48	17.95	5	299
HC3145 • 2100TMCY	10.24	7.8647	47.36	.59	43	6	3.00	.16	9.06	5.98	8.23	1.875	2.40	1/2 x 1/2 x 2.17	7.76	10.16	9.65	23.94	10	452
HC3150 • 2015TMCY	10.24	7.8647	36.82	.59	43	6	3.78	.16	9.06	5.98	8.23	1.875	3.19	1/2 x 1/2 x 2.95	5.39	6.93	6.10	15.24	1-1/2	216
HC3155 • 2020TMCY	10.24	7.8647	36.82	.59	43	6	3.78	.16	9.06	5.98	8.23	1.875	3.19	1/2 x 1/2 x 2.95	5.39	6.93	6.10	15.24	2	216
HC3155 • 2030TMCY	10.24	7.8647	40.72	.59	43	6	3.78	.16	9.06	5.98	8.23	1.875	3.19	1/2 x 1/2 x 2.95	5.39	6.93	7.48	17.95	3	265
HC3155 • 2100TMCY	10.24	7.8647	48.14	.59	43	6	3.78	.16	9.06	5.98	8.23	1.875	3.19	1/2 x 1/2 x 2.95	7.76	10.16	9.65	23.94	10	454
HC3160 • 2030TMCY	13.39	10.6410	43.55	.79	43	6	3.50	.16	12.20	8.54	7.87	2.250	3.15	5/8 x 5/8 x 2.56	5.39	6.93	7.48	17.95	3	374
HC3160 • 2050TMCY	13.39	10.6410	45.16	.79	43	6	3.50	.16	12.20	8.54	7.87	2.250	3.15	5/8 x 5/8 x 2.56	6.30	8.46	7.48	17.95	5	402
HC3160 • 2080TMCY	13.39	10.6410	49.40	.79	43	6	3.50	.16	12.20	8.54	7.87	2.250	3.15	5/8 x 5/8 x 2.56	7.76	10.16	9.65	23.94	7-1/2	535
HC3160 • 2100TMCY	13.39	10.6410	50.95	.79	43	6	3.50	.16	12.20	8.54	7.87	2.250	3.15	5/8 x 5/8 x 2.56	7.76	10.16	9.65	23.94	10	563
HC3170 • 2050TMCY	15.75	12.6410	47.66	.87	55	8	3.70	.20	14.17	8.74	8.86	2.750	3.31	3/4 x 3/4 x 3.15	6.30	8.46	7.48	17.95	5	435
HC3170 • 2080TMCY	15.75	12.6410	51.92	.87	55	8	3.70	.20	14.17	8.74	8.86	2.750	3.31	3/4 x 3/4 x 3.15	7.76	10.16	9.65	23.94	7-1/2	620
HC3170 • 2100TMCY	15.75	12.6410	53.50	.87	55	8	3.70	.20	14.17	8.74	8.86	2.750	3.31	3/4 x 3/4 x 3.15	7.76	10.16	9.65	23.94	10	648

DIMENSIONS

SM-BEISTER CYCLO ADAPTOR TYPE

DOUBLE REDUCTION HORIZONTAL

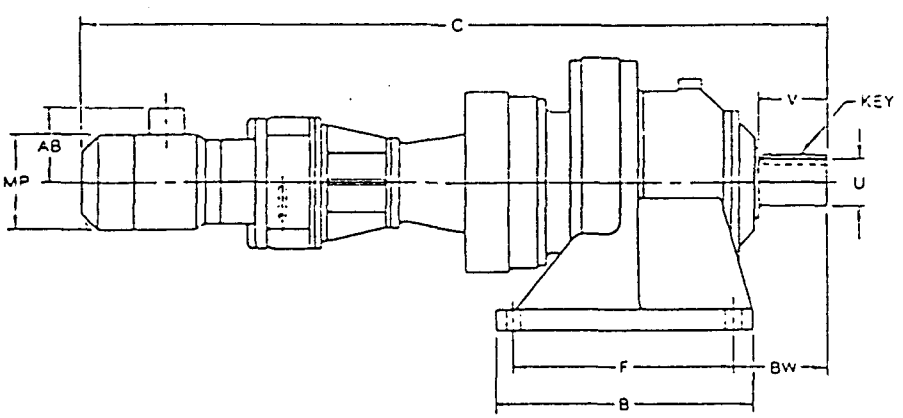

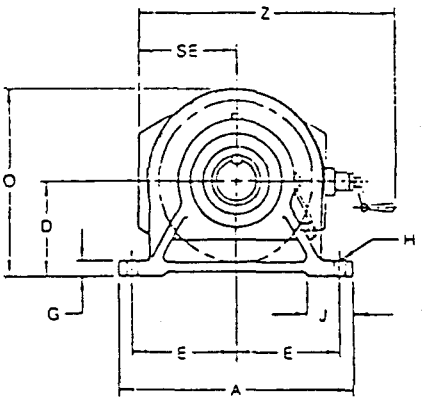

													OUTPUT SHAFT							
MODEL TMFY	A	B	C	D +.0 -.001	E	F	G	H	J	O	P	BW	U	V	KEY	AB	MP	SE	Z	HP	NET WT.
HC3115/09-2002	9.06	6.10	30.45	4.724	3.74	4.53	.59	.55	1.57	10.12	8.03	3.23	1.500	2.17	½x½x1.17	4.80	5.20	4.80	12.80	½	120
HC3115/09-2005	9.06	6.10	31.23	4.724	3.74	4.53	.59	.55	1.57	10.12	8.03	3.23	1.500	2.17	½x½x1.77	4.80	5.20	4.80	12.80	½	126
HC3115/09-2008	9.06	6.10	32.65	4.724	3.74	4.53	.59	.55	1.57	10.12	8.03	3.23	1.500	2.17	½x½x1.77	4.92	5.94	4.80	12.80	¾	133
HC3115/09-2010	9.06	6.10	32.65	4.724	3.74	4.53	.59	.55	1.57	10.12	8.03	3.23	1.500	2.17	½x½x1.77	4.92	5.94	4.80	12.80	1	133
HC3145/10-2002	13.0	7.68	32.70	5.905	5.71	5.71	.87	.71	2.56	11.81	9.06	3.94	1.875	2.76	½x½x2.17	4.80	5.20	4.80	12.80	½	173
HC3145/10-2005	13.0	7.68	33.48	5.905	5.71	5.71	.87	.71	2.56	11.81	9.06	3.94	1.875	2.76	½x½x2.17	4.80	5.20	4.80	12.80	½	179
HC3145/10-2008	13.0	7.68	34.90	5.905	5.71	5.71	.87	.71	2.56	11.81	9.06	3.94	1.875	2.76	½x½x2.17	4.92	5.94	4.80	12.80	¾	185
HC3145/10-2010	13.0	7.68	34.90	5.905	5.71	5.71	.87	.71	2.56	11.81	9.06	3.94	1.875	2.76	½x½x2.17	4.92	5.94	4.80	12.80	1	186
HC3145/10-2015	13.0	7.68	37.93	5.905	5.71	5.71	.87	.71	2.56	11.81	9.06	3.94	1.875	2.76	½x½x2.17	5.39	6.93	6.10	15.24	1½	223
HC3145/10-2020	13.0	7.68	37.93	5.905	5.71	5.71	.87	.71	2.56	11.81	9.06	3.94	1.875	2.76	½x½x2.17	5.39	6.93	6.10	15.24	2	223
HC3155/09-2002	13.0	7.68	38.25	5.905	5.71	5.71	.87	.71	2.56	11.81	9.06	4.72	1.875	3.54	½x½x2.95	4.80	5.20	4.80	12.80	½	167
HC3155/09-2005	13.0	7.68	34.03	5.905	5.71	5.71	.87	.71	2.56	11.81	9.06	4.72	1.875	3.54	½x½x2.95	4.80	5.20	4.80	12.80	½	173
HC3155/09-2010	13.0	7.68	35.45	5.905	5.71	5.71	.87	.71	2.56	11.81	9.06	4.72	1.875	3.54	½x½x2.95	4.80	5.20	4.80	12.80	1	180
HC3165/11-2005	16.14	9.37	37.14	6.299	7.28	5.91	.98	.71	2.95	12.56	12.52	5.47	2.250	3.54	½x½x2.95	4.80	5.20	4.80	12.80	½	272
HC3165/11-2008	16.14	9.37	38.56	6.299	7.28	5.91	.98	.71	2.95	12.56	12.52	5.47	2.250	3.54	½x½x2.95	4.92	5.94	4.80	12.80	¾	279
HC3165/11-2010	16.14	9.37	38.56	6.299	7.28	5.91	.98	.71	2.95	12.56	12.52	5.47	2.250	3.54	½x½x2.95	4.92	5.94	4.80	12.80	1	279
HC3165/11-2015	16.14	9.37	41.59	6.299	7.28	5.91	.98	.71	2.95	12.56	12.52	5.47	2.250	3.54	½x½x2.95	5.39	6.93	6.10	15.24	1½	316
HC3165/11-2020	16.14	9.37	41.59	6.299	7.28	5.91	.98	.71	2.95	12.56	12.52	5.47	2.250	3.54	½x½x2.95	5.39	6.93	6.10	15.24	2	316
HC3165/11-2030	16.14	9.37	45.46	6.299	7.28	5.91	.98	.71	2.95	12.56	12.52	5.47	2.250	3.54	½x½x2.95	5.39	6.93	7.48	17.95	3	365
HC3175/11-2005	16.93	13.19	38.99	7.874	7.48	10.83	1.18	.87	2.52	15.00	14.25	4.92	2.750	3.54	½x½x3.15	4.80	5.20	4.80	12.80	½	339
HC3175/11-2008	16.93	13.19	40.41	7.874	7.48	10.83	1.18	.87	2.52	15.00	14.25	4.92	2.750	3.54	½x½x3.15	4.92	5.94	4.80	12.80	¾	346
HC3175/11-2010	16.93	13.19	40.41	7.874	7.48	10.83	1.18	.87	2.52	15.00	14.25	4.92	2.750	3.54	½x½x3.15	4.92	5.94	4.80	12.80	1	346
HC3175/11-2015	16.93	13.19	43.44	7.874	7.48	10.83	1.18	.87	2.52	15.00	14.25	4.92	2.750	3.54	½x½x3.15	5.39	6.93	6.10	15.24	1½	383
HC3175/11-2020	16.93	13.19	43.44	7.874	7.48	10.83	1.18	.87	2.52	15.00	14.25	4.92	2.750	3.54	½x½x3.15	5.39	6.93	6.10	15.24	2	383
HC3175/11-2030	16.93	13.19	47.33	7.874	7.48	10.83	1.18	.87	2.52	15.00	14.25	4.92	2.750	3.54	½x½x3.15	5.39	6.93	7.48	17.95	3	432
HC3175/11-2050	16.93	13.19	45.94	7.874	7.48	10.83	1.18	.87	2.52	15.00	14.25	4.92	2.750	3.54	½x½x3.15	6.30	8.46	7.48	17.95	5	458
HC3185/14-2005	18.50	14.96	41.66	8.661	8.27	12.60	1.18	.87	2.87	16.34	15.35	5.71	3.125	4.33	½x½x3.74	4.80	5.20	4.80	12.80	½	435
HC3185/14-2005	18.50	14.96	43.08	8.661	8.27	12.60	1.18	.87	2.87	16.34	15.35	5.71	3.125	4.33	½x½x3.74	4.92	5.94	4.80	12.80	¾	442
HC3185/14-2010	18.50	14.96	43.08	8.661	8.27	12.60	1.18	.87	2.87	16.34	15.35	5.71	3.125	4.33	½x½x3.74	4.92	5.94	4.80	12.80	1	442
HC3185/14-2015	18.50	14.96	46.11	8.661	8.27	12.60	1.18	.87	2.87	16.34	15.35	5.71	3.125	4.33	½x½x3.74	5.39	6.93	6.10	15.24	1½	479
HC3185/14-2020	18.50	14.96	46.11	8.661	8.27	12.60	1.18	.87	2.87	16.34	15.35	5.71	3.125	4.33	½x½x3.74	5.39	6.93	6.10	15.24	2	479
HC3185/14-2030	18.50	14.96	50.01	8.661	8.27	12.60	1.18	.87	2.87	16.34	15.35	5.71	3.125	4.33	½x½x3.74	5.39	6.93	7.48	17.95	3	528
HC3185/14-2050	18.50	14.96	51.62	8.661	8.27	12.60	1.18	.87	2.87	16.34	15.35	5.71	3.125	4.33	½x½x3.74	6.30	8.46	7.48	17.95	5	554
HC3185/14-2080	18.50	14.96	55.86	8.661	8.27	12.60	1.18	.87	2.87	16.34	15.35	5.71	3.125	4.33	½x½x3.74	7.76	10.16	9.65	23.94	7½	696
HC3190/11-2005	20.87	17.32	43.71	9.842	9.45	14.96	1.38	1.02	3.54	18.74	17.76	6.69	3.625	5.31	½x½x3.92	4.80	5.20	4.80	12.80	½	600
HC3190/11-2010	20.87	17.32	45.13	9.842	9.45	14.96	1.38	1.02	3.54	18.74	17.76	6.69	3.625	5.31	½x½x3.92	4.92	5.94	4.80	12.80	1	607
HC3190/11-2015	20.87	17.32	48.16	9.842	9.45	14.96	1.38	1.02	3.54	18.74	17.76	6.69	3.625	5.31	½x½x3.92	5.39	6.93	6.10	15.24	1½	644
HC3190/11-2020	20.87	17.32	48.16	9.842	9.45	14.96	1.38	1.02	3.54	18.74	17.76	6.69	3.625	5.31	½x½x3.92	5.39	6.93	6.10	15.24	2	644
HC3190/11-2030	20.87	17.32	52.05	9.842	9.45	14.96	1.38	1.02	3.54	18.74	17.76	6.69	3.625	5.31	½x½x3.92	6.30	8.46	7.48	17.95	3	693
HC3190/11-2050	20.87	17.32	53.66	9.842	9.45	14.96	1.38	1.02	3.54	18.74	17.76	6.69	3.625	5.31	½x½x3.92	6.30	8.46	7.48	17.95	5	719
HC3195/11-2008	20.87	17.32	45.13	9.842	9.45	14.96	1.38	1.02	3.54	18.74	17.76	6.69	3.625	5.31	½x½x3.92	4.92	5.94	4.80	12.80	¾	607
HC3195/11-2010	20.87	17.32	45.13	9.842	9.45	14.96	1.38	1.02	3.54	18.74	17.76	6.69	3.625	5.31	½x½x3.92	4.92	5.94	4.80	12.80	1	607
HC3195/11-2015	20.87	17.32	48.16	9.842	9.45	14.96	1.38	1.02	3.54	18.74	17.76	6.69	3.625	5.31	½x½x3.92	5.39	6.93	6.10	15.24	1½	644
HC3195/11-2020	20.87	17.32	48.16	9.842	9.45	14.96	1.38	1.02	3.54	18.74	17.76	6.69	3.625	5.31	½x½x3.92	5.39	6.93	6.10	15.24	2	644

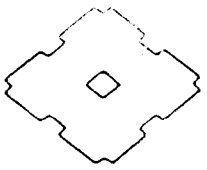

DOUBLE REDUCTION HORIZONTAL

													OUTPUT SHAFT								
MODEL TMFY	A	B	C	D +.0 -.02	E	F	G	H	J	O	P	BW	U	V	KEY	AB	MP	SE	Z	HP	NET WT.
HC3195/11-2020	20.87	17.32	52.05	9.842	9.45	14.96	1.38	1.02	3.54	18.74	17.76	6.69	3.625	5.31	[illegible]	5.39	6.93	7.48	17.95	3	693
HC3195/14-2030	20.87	17.32	53.00	9.842	9.45	14.96	1.38	1.02	3.54	18.74	17.76	6.69	3.625	5.31	[illegible]	5.39	6.93	7.48	17.95	3	715
HC3195/14-2050	20.87	17.32	54.61	9.842	9.45	14.96	1.38	1.02	3.54	18.74	17.76	6.69	3.625	5.31	[illegible]	6.30	8.46	7.48	17.95	5	741
HC3195/14-2080	20.87	17.32	58.85	9.842	9.45	14.96	1.38	1.02	3.54	18.74	17.76	6.69	3.625	5.31	[illegible]	7.76	10.16	9.65	23.94	7½	876
HC3195/14-2100	20.87	17.32	60.43	9.842	9.45	14.96	1.38	1.02	3.54	18.74	17.76	6.69	3.625	5.31	[illegible]	7.76	10.16	9.65	23.94	10	904
HC3205/11-2010	20.87	17.32	46.75	9.842	8.66	14.17	1.38	1.02	3.94	20.87	18.54	8.46	3.875	6.50	[illegible]	4.92	5.94	4.80	12.90	1	649
HC3205/11-2015	20.87	17.32	49.78	9.842	8.66	14.17	1.38	1.02	3.94	20.87	18.54	8.46	3.875	6.50	[illegible]	5.39	6.93	6.10	15.24	1½	686
HC3205/11-2020	20.87	17.32	49.78	9.842	8.66	14.17	1.38	1.02	3.94	20.87	18.54	8.46	3.875	6.50	[illegible]	5.39	6.93	6.10	15.24	2	686
HC3205/14-2030	20.87	17.32	55.05	9.842	8.66	14.17	1.38	1.02	3.94	20.87	18.54	8.46	3.875	6.50	[illegible]	5.39	6.93	7.48	17.95	3	772
HC3205/14-2050	20.87	17.32	56.66	9.842	8.66	14.17	1.38	1.02	3.94	20.87	18.54	8.46	3.875	6.50	[illegible]	6.30	8.46	7.48	17.95	5	798
HC3205/14-2080	20.87	17.32	60.90	9.842	8.66	14.17	1.38	1.02	3.94	20.87	18.54	8.46	3.875	6.50	[illegible]	7.76	10.16	9.65	23.94	7½	933
HC3205/14-2100	20.87	17.32	62.48	9.842	8.66	14.17	1.38	1.02	3.94	20.87	18.54	8.46	3.875	6.50	[illegible]	7.76	10.16	9.65	23.94	10	961
HC3215/14-2010	22.83	18.70	49.15	10.433	9.45	15.55	1.57	1.02	4.33	22.64	19.96	8.27	4.250	6.50	[illegible]	4.92	5.94	4.80	12.80	1	865
HC3215/14-2015	22.83	18.70	52.18	10.433	9.45	15.55	1.57	1.02	4.33	22.64	19.96	8.27	4.250	6.50	[illegible]	5.39	6.93	6.10	15.24	1½	902
HC3215/14-2020	22.83	18.70	52.18	10.433	9.45	15.55	1.57	1.02	4.33	22.64	19.96	8.27	4.250	6.50	[illegible]	5.39	6.93	6.10	15.24	2	902
HC3215/14-2030	22.83	18.70	56.07	10.433	9.45	15.55	1.57	1.02	4.33	22.64	19.96	8.27	4.250	6.50	[illegible]	5.39	6.93	7.48	17.95	3	951
HC3215/14-2030	22.83	18.70	57.68	10.433	9.45	15.55	1.57	1.02	4.33	22.64	19.96	8.27	4.250	6.50	[illegible]	6.30	8.46	7.48	17.95	5	977
HC3215/14-2080	22.83	18.70	61.92	10.433	9.45	15.55	1.57	1.02	4.33	22.64	19.96	8.27	4.250	6.50	[illegible]	7.76	10.16	9.65	23.94	7½	1110
HC3215/16-2100	22.83	18.70	65.43	10.433	9.45	15.55	1.57	1.02	4.33	22.64	19.96	8.27	4.250	6.50	[illegible]	7.76	10.16	9.65	23.94	10	1220
HC3225/14-2015	24.41	20.47	53.83	11.024	10.63	16.54	1.57	1.30	4.53	24.02	21.61	9.06	4.625	6.50	[illegible]	5.39	6.93	6.10	15.24	1½	1065
HC3225/14-2020	24.41	20.47	53.83	11.024	10.63	16.54	1.57	1.30	4.53	24.02	21.61	9.06	4.625	6.50	[illegible]	5.39	6.93	6.10	15.24	2	1065
HC3225/14-2030	24.41	20.47	57.72	11.024	10.63	16.54	1.57	1.30	4.53	24.02	21.61	9.06	4.625	6.50	[illegible]	5.39	6.93	7.48	17.95	3	1115
HC3225/14-2050	24.41	20.47	59.33	11.024	10.63	16.54	1.57	1.30	4.53	24.02	21.61	9.06	4.625	6.50	[illegible]	6.30	8.46	7.48	17.95	5	1140
HC3225/14-2080	24.41	20.47	63.58	11.024	10.63	16.54	1.57	1.30	4.53	24.02	21.61	9.06	4.625	6.50	[illegible]	7.76	10.16	9.65	23.94	7½	1275
HC3225/17-2100	24.41	20.47	68.58	11.024	10.63	16.54	1.57	1.30	4.53	24.02	21.61	9.06	4.625	6.50	[illegible]	7.76	10.16	9.65	23.94	10	1430
HC3235/16-2015	26.38	22.05	58.16	11.811	11.42	18.11	1.77	1.30	4.72	26.26	23.27	10.24	5.000	7.87	[illegible]	5.39	6.93	6.10	15.24	1½	1360
HC3235/16-2020	26.38	22.05	58.16	11.811	11.42	18.11	1.77	1.30	4.72	26.26	23.27	10.24	5.000	7.87	[illegible]	5.39	6.93	6.10	15.24	2	1360
HC3235/16-2030	26.38	22.05	62.05	11.811	11.42	18.11	1.77	1.30	4.72	26.26	23.27	10.24	5.000	7.87	[illegible]	5.39	6.93	7.48	17.95	3	1410
HC3235/16-2080	26.38	22.05	67.91	11.811	11.42	18.11	1.77	1.30	4.72	26.26	23.27	10.24	5.000	7.87	[illegible]	7.76	10.16	9.65	23.94	7½	1570
HC3235/16-2100	26.38	22.05	69.49	11.811	11.42	18.11	1.77	1.30	4.72	26.26	23.27	10.24	5.000	7.87	[illegible]	7.76	10.16	9.65	23.94	10	1600
HC3245/16-2015	28.35	22.83	59.66	13.189	12.40	18.90	1.77	1.54	5.04	28.70	25.08	10.35	5.500	7.87	[illegible]	5.39	6.93	6.10	15.24	1½	1600
HC3245/16-2020	28.35	22.83	59.66	13.189	12.40	18.90	1.77	1.54	5.04	28.70	25.08	10.35	5.500	7.87	[illegible]	5.39	6.93	6.10	15.24	2	1600
HC3245/16-2030	28.35	22.83	63.55	13.189	12.40	18.90	1.77	1.54	5.04	28.70	25.08	10.35	5.500	7.87	[illegible]	5.39	6.93	7.48	17.95	3	1645
HC3245/16-2050	28.35	22.83	65.16	13.189	12.40	18.90	1.77	1.54	5.04	28.70	25.08	10.35	5.500	7.87	[illegible]	6.30	8.46	7.48	17.95	5	1675
HC3245/16-2080	28.35	22.83	69.40	13.189	12.40	18.90	1.77	1.54	5.04	28.70	25.05	10.35	5.500	7.87	[illegible]	7.76	10.16	9.65	23.94	7½	1810
HC3245/16-2100	28.35	22.83	70.98	13.189	12.40	18.90	1.77	1.54	5.04	28.70	25.08	10.35	5.500	7.87	[illegible]	7.76	10.16	9.65	23.94	10	1835
HC3255/17-2030	30.71	24.80	69.85	14.764	13.19	20.47	1.97	1.54	5.51	32.09	27.68	12.60	6.250	9.45	[illegible]	5.39	6.93	7.48	17.95	3	2420
HC3255/17-2050	30.71	24.80	71.46	14.764	13.19	20.47	1.97	1.54	5.51	32.09	27.68	12.60	6.250	9.45	[illegible]	6.30	8.46	7.48	17.95	5	2445
HC3255/17-2080	30.71	24.80	75.70	14.764	13.19	20.47	1.97	1.54	5.51	32.09	27.68	12.60	6.250	9.45	[illegible]	7.76	10.16	9.65	23.94	7½	2580
HC3255/17-2100	30.71	24.80	77.28	14.764	13.19	20.47	1.97	1.54	5.51	32.09	27.68	12.60	6.250	9.45	[illegible]	7.76	10.16	9.65	23.94	10	2610
HC3265/19-2080	34.65	27.56	82.21	15.748	15.16	23.23	2.17	1.77	6.30	34.41	30.39	15.35	6.250	9.45	[illegible]	7.76	10.16	9.65	23.94	7½	3335
HC3265/19-2100	34.65	27.56	83.79	15.748	15.16	23.23	2.17	1.77	6.30	34.41	30.39	15.35	6.250	9.45	[illegible]	7.76	10.16	9.65	23.94	10	3360
HC3275/19-2080	45.67	40.94	92.48	21.259	20.67	16.54	2.36	1.77	7.87	43.16	39.26	19.09	7.000	13.78	[illegible]	7.76	10.16	9.65	23.94	7½	5875
HC3275/19-2100	45.67	40.94	94.06	21.259	20.67	16.54	2.36	1.77	7.87	43.16	39.26	19.09	7.000	13.78	[illegible]	7.76	10.16	9.65	23.94	10	5900

DIMENSIONS

SM-BEISTER CYCLO ADAPTOR TYPE

DOUBLE REDUCTION
VERTICAL

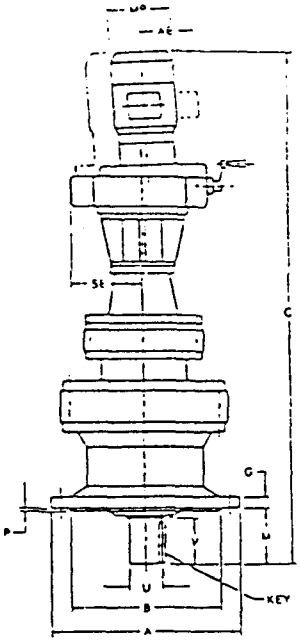

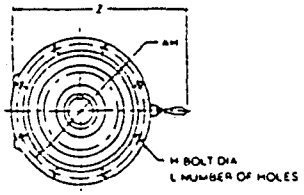

												OUTPUT SHAFT								
MODEL	A	B	C	G	H	L	M	P	AH	X	Y	U	V	KEY	AB	MP	SE	Z	HP	NET WT.
VC3115/09•2002TMCY	8.27	3.5078 / 3.5101	30.45	.51	.43	6	2.72	.16	7.09	5.39	—	1.500	2.17	3/8 x 3/8 x 1.77	4.80	5.20	4.80	12.80	1/4	120
VC3115/09•2005TMCY	8.27	3.5078 / 3.5101	31.23	.51	.43	6	2.72	.16	7.09	5.39	—	1.500	2.17	3/8 x 3/8 x 1.77	4.80	5.20	4.80	12.80	1/2	126
VC3115/09•2008TMCY	8.27	3.5078 / 3.5101	32.65	.51	.43	6	2.72	.16	7.09	5.39	—	1.500	2.17	3/8 x 3/8 x 1.77	4.92	5.94	4.80	12.80	3/4	133
VC3115/09•2010TMCY	8.27	3.5078 / 3.5101	32.65	.51	.43	6	2.72	.16	7.09	5.39	—	1.500	2.17	3/8 x 3/8 x 1.77	4.92	5.94	4.80	12.80	1	133
VC3145/10•2002TMCY	10.24	7.8692 / 7.8720	32.70	.59	.43	6	3.00	.16	9.06	5.98	8.23	1.875	2.40	1/2 x 1/2 x 2.17	4.80	5.20	4.80	12.80	1/4	171
VC3145/10•2005TMCY	10.24	7.8692 / 7.8720	33.48	.59	.43	6	3.00	.16	9.06	5.98	8.23	1.875	2.40	1/2 x 1/2 x 2.17	4.80	5.20	4.80	12.80	1/2	177
VC3145/10•2008TMCY	10.24	7.8692 / 7.8720	34.90	.59	.43	6	3.00	.16	9.06	5.98	8.23	1.875	2.40	1/2 x 1/2 x 2.17	4.92	5.94	4.80	12.80	3/4	184
VC3145/10•2010TMCY	10.24	7.8692 / 7.8720	34.90	.59	.43	6	3.00	.16	9.06	5.98	8.23	1.875	2.40	1/2 x 1/2 x 2.17	4.92	5.94	4.80	12.80	1	184
VC3145/10•2015TMCY	10.24	7.8692 / 7.8720	37.93	.59	.43	6	3.00	.16	9.06	5.98	8.23	1.875	2.40	1/2 x 1/2 x 2.17	5.39	6.93	6.10	15.24	1-1/2	221
VC3145/10•2020TMCY	10.24	7.8692 / 7.8720	37.93	.59	.43	6	3.00	.16	9.06	5.98	8.23	1.875	2.40	1/2 x 1/2 x 2.17	5.39	6.93	6.10	15.24	2	221
VC3155/09•2002TMCY	10.24	7.8692 / 7.8720	33.25	.59	.43	6	3.78	.16	9.06	5.98	8.23	1.875	3.19	1/2 x 1/2 x 2.95	4.80	5.20	4.80	12.80	1/4	164
VC3155/09•2005TMCY	10.24	7.8692 / 7.8720	34.03	.59	.43	6	3.78	.16	9.06	5.98	8.23	1.875	3.19	1/2 x 1/2 x 2.95	4.80	5.20	4.80	12.80	1/2	170
VC3155/09•2010TMCY	10.24	7.8692 / 7.8720	35.45	.59	.43	6	3.78	.16	9.06	5.98	8.23	1.875	3.19	1/2 x 1/2 x 2.95	4.80	5.20	4.80	12.80	1	177
VC3165/11•2005TMCY	13.39	10.6243 / 10.6277	37.14	.79	.43	6	3.50	.16	12.20	8.54	7.87	2.250	3.15	1/2 x 1/2 x 2.95	4.80	5.20	4.80	12.80	1/2	267
VC3165/11•2008TMCY	13.39	10.6243 / 10.6277	38.56	.79	.43	6	3.50	.16	12.20	8.54	7.87	2.250	3.15	1/2 x 1/2 x 2.95	4.92	5.94	4.80	12.80	3/4	274
VC3165/11•2010TMCY	13.39	10.6243 / 10.6277	38.56	.79	.43	6	3.50	.16	12.20	8.54	7.87	2.250	3.15	1/2 x 1/2 x 2.95	4.92	5.94	4.80	12.80	1	274
VC3165/11•2015TMCY	13.39	10.6243 / 10.6277	41.59	.79	.43	6	3.50	.16	12.20	8.54	7.87	2.250	3.15	1/2 x 1/2 x 2.95	5.39	6.93	6.10	15.24	1-1/2	311
VC3165/11•2020TMCY	13.39	10.6243 / 10.6277	41.59	.79	.43	6	3.50	.16	12.20	8.54	7.87	2.250	3.15	1/2 x 1/2 x 2.95	5.39	6.93	6.10	15.24	2	311
VC3165/11•2030TMCY	13.39	10.6243 / 10.6277	45.48	.79	.43	6	3.50	.16	12.20	8.54	7.87	2.250	3.15	1/2 x 1/2 x 2.95	5.39	6.93	7.48	17.95	3	360
VC3175/11•2005TMCY	15.75	12.4350 / 12.4383	38.99	.87	.55	8	3.70	.20	14.17	8.74	8.86	2.750	3.31	5/8 x 5/8 x 3.15	4.80	5.20	4.80	12.80	1/2	344
VC3175/11•2008TMCY	15.75	12.4350 / 12.4383	40.41	.87	.55	8	3.70	.20	14.17	8.74	8.85	2.750	3.31	5/8 x 5/8 x 3.15	4.92	5.94	4.80	12.80	3/4	351
VC3175/11•2010TMCY	15.75	12.4350 / 12.4383	40.41	.87	.55	8	3.70	.20	14.17	8.74	8.86	2.750	3.31	5/8 x 5/8 x 3.15	4.92	5.94	4.80	12.80	1	351
VC3175/11•2015TMCY	15.75	12.4350 / 12.4383	43.44	.87	.55	8	3.70	.20	14.17	8.74	8.86	2.750	3.31	5/8 x 5/8 x 3.15	5.39	6.93	6.10	15.24	1-1/2	386
VC3175/11•2020TMCY	15.75	12.4350 / 12.4383	43.44	.87	.55	8	3.70	.20	14.17	8.74	8.86	2.750	3.31	5/8 x 5/8 x 3.15	5.39	6.93	6.10	15.24	2	388
VC3175/11•2030TMCY	15.75	12.4350 / 12.4383	47.23	.87	.55	8	3.70	.20	14.17	8.74	8.86	2.750	3.31	5/8 x 5/8 x 3.15	5.39	6.93	7.48	17.95	3	437
VC3175/11•2050TMCY	15.75	12.4350 / 12.4383	46.94	.87	.55	8	3.70	.20	14.17	8.74	8.85	2.750	3.31	5/8 x 5/8 x 3.15	6.30	8.46	7.48	17.95	5	463
VC3185/14•2005TMCY	16.93	13.3768 / 13.3803	41.66	.87	.71	8	4.33	.20	15.35	9.33	9.45	3.125	3.94	3/4 x 3/4 x 3.94	4.80	5.20	4.80	12.80	1/2	446
VC3185/14•2008TMCY	16.93	13.3768 / 13.3803	43.08	.87	.71	8	4.33	.20	15.35	9.33	9.45	3.125	3.94	3/4 x 3/4 x 3.94	4.92	5.94	4.80	12.80	3/4	453
VC3185/14•2010TMCY	16.93	13.3768 / 13.3803	43.08	.87	.71	8	4.33	.20	15.35	9.33	9.45	3.125	3.94	3/4 x 3/4 x 3.94	4.92	5.94	4.80	12.80	1	453
VC3185/14•2015TMCY	16.93	13.3768 / 13.3803	46.11	.87	.71	8	4.33	.20	15.35	9.33	9.45	3.125	3.94	3/4 x 3/4 x 3.94	5.39	6.93	6.10	15.24	1-1/2	490
VC3185/14•2020TMCY	16.93	13.3768 / 13.3803	46.11	.87	.71	8	4.33	.20	15.35	9.33	9.45	3.125	3.94	3/4 x 3/4 x 3.94	5.39	6.93	6.10	15.24	2	490
VC3185/14•2030TMCY	16.93	13.3768 / 13.3803	50.01	.87	.71	8	4.33	.20	15.35	9.33	9.45	3.125	3.94	3/4 x 3/4 x 3.94	5.39	6.93	7.48	17.95	3	539
VC3185/14•2050TMCY	16.93	13.3768 / 13.3803	51.62	.87	.71	8	4.33	.20	15.35	9.33	9.45	3.125	3.94	3/4 x 3/4 x 3.94	6.30	8.46	7.48	17.95	5	565
VC3185/14•2080TMCY	16.93	13.3768 / 13.3803	55.86	.87	.71	8	4.33	.20	15.35	9.33	9.45	3.125	3.94	3/4 x 3/4 x 3.94	7.76	10.16	9.65	23.94	7.5-10	700
VC3190/11•2005TMCY	19.29	13.3768 / 13.3803	43.71	1.18	.71	10	5.71	.24	17.20	10.43	10.63	3.625	4.93	7/8 x 7/8 x 4.92	4.80	5.20	4.80	12.80	1/2	573

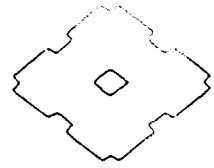

DOUBLE REDUCTION VERTICAL

												OUTPUT SHAFT							
MODEL	A	B	C	G	H	L	M	P	AH	X	Y	U	V	KEY	AB	MP	SE	Z	HP	NET WT.
VC3190/11-2010TMCY	19.29	13 7421/15 7456	45.13	1.18	.71	12	5.71	.24	17.72	10.43	10.63	3.625	4.92	7/8 x 7/8 x 4.92	4.92	5.94	4.80	12.80	1	580
VC3190/11-2015TMCY	19.29	13 7421/15 7456	48.16	1.18	.71	12	5.71	.24	17.72	10.43	10.63	3.625	4.92	7/8 x 7/8 x 4.92	5.39	6.93	6.10	15.24	1-1/2	617
VC3190/11-2020TMCY	19.29	13 7421/15 7456	48.16	1.18	.71	12	5.71	.24	17.72	10.43	10.63	3.625	4.92	7/8 x 7/8 x 4.92	5.39	6.93	6.10	15.24	2	617
VC3190/11-2030TMCY	19.29	13 7421/15 7456	52.05	1.18	.71	12	5.71	.24	17.72	10.43	10.63	3.625	4.92	7/8 x 7/8 x 4.92	5.39	6.93	7.48	17.95	3	666
VC3190/11-2050TMCY	19.29	13 7421/15 7456	53.66	1.18	.71	12	5.71	.24	17.72	10.43	10.63	3.625	4.92	7/8 x 7/8 x 4.92	6.30	8.46	7.48	17.95	5	692
VC3195/11-2008TMCY	19.29	13 7421/15 7456	45.13	1.18	.71	12	5.71	.24	17.72	10.43	10.63	3.625	4.92	7/8 x 7/8 x 4.92	4.92	5.94	4.80	12.80	3/4	580
VC3195/11-2010TMCY	19.29	13 7421/15 7456	45.13	1.18	.71	12	5.71	.24	17.72	10.43	10.63	3.625	4.92	7/8 x 7/8 x 4.92	4.92	5.94	4.80	12.80	1	580
VC3195/11-2015TMCY	19.29	13 7421/15 7456	48.16	1.18	.71	12	5.71	.24	17.72	10.43	10.63	3.625	4.92	7/8 x 7/8 x 4.92	5.39	6.93	6.10	15.24	1-1/2	617
VC3195/11-2020TMCY	19.29	13 7421/15 7456	48.16	1.18	.71	12	5.71	.24	17.72	10.43	10.63	3.625	4.92	7/8 x 7/8 x 4.92	5.39	6.93	6.10	15.24	2	617
VC3195/11-2080TMCY	19.29	13 7421/15 7456	52.05	1.18	.71	12	5.71	.24	17.72	10.43	10.63	3.625	4.92	7/8 x 7/8 x 4.92	5.39	6.93	7.48	17.95	3	666
VC3195/14-2030TMCY	19.29	13 7421/15 7456	53.0	1.18	.71	12	5.71	.24	17.72	10.43	10.63	3.625	4.92	7/8 x 7/8 x 4.92	5.39	6.93	7.48	17.95	3	693
VC3195/14-2050TMCY	19.29	13 7421/15 7456	54.61	1.18	.71	12	5.71	.24	17.72	10.43	10.63	3.625	4.92	7/8 x 7/8 x 4.92	6.30	8.46	7.48	17.95	5	719
VC3195/14-2080TMCY	19.29	13 7421/15 7456	58.85	1.18	.71	12	5.71	.24	17.72	10.43	10.63	3.625	4.92	7/8 x 7/8 x 4.92	7.76	10.16	9.65	23.94	7-1/2	854
VC3195/14-2100TMCY	19.29	13 7421/15 7456	60.43	1.18	.71	12	5.71	.24	17.72	10.43	10.63	3.625	4.92	7/8 x 7/8 x 4.92	7.76	10.16	9.65	23.94	10	882
VC3205/11-2010TMCY	17.91	13 9704/13 9739	46.75	1.18	.87	8	8.03	.20	15.94	13.43	11.30	3.875	6.50	1 x 1 x 6.50	4.92	5.94	4.80	12.80	1	609
VC3205/11-2015TMCY	17.91	13 9704/13 9739	49.78	1.18	.87	8	8.03	.20	15.94	13.43	11.30	3.875	6.50	1 x 1 x 6.50	5.39	6.93	6.10	15.24	1-1/2	646
VC3205/11-2020TMCY	17.91	13 9704/13 9739	49.78	1.18	.87	8	8.03	.20	15.94	13.43	11.30	3.875	6.50	1 x 1 x 6.50	5.39	6.93	6.10	15.24	2	646
VC3205/11-2030TMCY	17.91	13 9704/13 9739	55.05	1.18	.87	8	8.03	.20	15.94	13.43	11.30	3.875	6.50	1 x 1 x 6.50	5.39	6.93	7.48	17.95	3	733
VC3205/14-2050TMCY	17.91	13 9704/13 9739	56.66	1.18	.87	8	8.03	.20	15.94	13.43	11.30	3.875	6.50	1 x 1 x 6.50	6.30	8.46	7.48	17.95	5	759
VC3205/14-2080TMCY	17.91	13 9704/13 9739	60.90	1.18	.87	8	8.03	.20	15.94	13.43	11.30	3.875	6.50	1 x 1 x 6.50	7.76	10.16	9.65	23.94	7-1/2	894
VC3205/14-2100TMCY	17.91	13 9704/13 9739	62.48	1.18	.87	8	8.03	.20	15.94	13.43	11.30	3.875	6.50	1 x 1 x 6.50	7.76	10.16	9.65	23.94	10	922
VC3215/14-2010TMCY	19.29	15 3484/15 3519	49.15	1.38	.94	8	8.00	.28	17.32	13.70	12.05	4.250	6.50	1 x 1 x 6.50	4.92	5.94	4.80	12.80	1	812
VC3215/14-2015TMCY	19.29	15 3484/15 3519	52.18	1.38	.94	8	8.00	.28	17.32	13.70	12.05	4.250	6.50	1 x 1 x 6.50	5.39	6.39	6.10	15.24	1-1/2	849
VC3215/14-2020TMCY	19.29	15 3484/15 3519	52.18	1.38	.94	8	8.00	.28	17.32	13.70	12.05	4.250	6.50	1 x 1 x 6.50	5.39	6.39	6.10	15.24	2	849
VC3215/14-2030TMCY	19.29	15 3484/15 3519	56.07	1.38	.94	8	8.00	.28	17.32	13.70	12.05	4.250	6.50	1 x 1 x 6.50	5.39	6.39	7.48	17.95	3	898
VC3215/14-2050TMCY	19.29	15 3484/15 3519	57.68	1.38	.94	8	8.00	.28	17.32	13.70	12.05	4.250	6.50	1 x 1 x 6.50	6.30	8.46	7.48	17.95	5	924
VC3215/14-2080TMCY	19.29	15 3484/15 3519	61.92	1.38	.94	8	8.00	.28	17.32	13.70	12.05	4.250	6.50	1 x 1 x 6.50	7.76	10.16	9.65	23.94	7-1/2	1060
VC3215/15-2100TMCY	19.29	15 3484/15 3519	65.43	1.38	.94	8	8.00	.28	17.32	13.70	12.05	4.250	6.50	1 x 1 x 6.50	7.76	10.16	9.65	23.94	10	1165
VC3225/14-2015TMCY	21.06	16 3321/16 3359	53.83	1.38	1.06	8	8.27	.39	18.70	13.86	12.83	4.625	6.50	1-1/4 x 7/8 x 6.50	5.39	6.93	6.10	15.24	1-1/2	1015
VC3225/14-2020TMCY	21.06	16 3321/16 3359	53.83	1.38	1.06	8	8.27	.39	18.70	13.86	12.83	4.625	6.50	1-1/4 x 7/8 x 6.50	5.39	6.93	6.10	15.24	2	1015
VC3225/14-2030TMCY	21.06	16 3321/16 3359	57.72	1.38	1.06	8	8.27	.39	18.70	13.86	12.83	4.625	6.50	1-1/4 x 7/8 x 6.50	5.39	6.93	7.48	17.95	3	1065
VC3225/14-2050TMCY	21.06	16 3321/16 3359	59.33	1.38	1.06	8	8.27	.39	18.70	13.86	12.83	4.625	6.50	1-1/4 x 7/8 x 6.50	6.30	8.46	7.48	17.95	5	1090
VC3225/14-2080TMCY	21.06	16 3321/16 3359	63.58	1.38	1.06	8	8.27	.39	18.70	13.86	12.83	4.625	6.50	1-1/4 x 7/8 x 6.50	7.76	10.16	9.65	23.94	7-1/2	1225
VC3225/17-2100TMCY	21.05	16 3321/16 3359	68.58	1.38	1.06	8	8.27	.39	18.70	13.86	12.83	4.625	6.50	1-1/4 x 7/8 x 6.50	7.76	10.16	9.65	23.94	10	1380
VC3235/16-2015TMCY	22.44	17 7109/17 7139	58.16	1.57	1.06	8	9.84	.39	20.08	14.13	13.54	5.000	7.87	1-1/4 x 7/8 x 6.50	5.39	6.93	6.10	15.24	1-1/2	1270
VC3235/16-2020TMCY	22.44	17 7109/17 7139	58.16	1.57	1.06	8	9.84	.39	20.08	14.13	13.54	5.000	7.87	1-1/4 x 7/8 x 6.50	5.39	6.93	6.10	15.24	2	1270
VC3235/16-2030TMCY	22.44	17 7109/17 7139	62.05	1.57	1.06	8	9.84	.39	20.08	14.13	13.54	5.000	7.87	1-1/4 x 7/8 x 6.50	5.39	6.93	7.48	17.95	3	1320
VC3235/16-2080TMCY	22.44	17 7109/17 7139	67.91	1.57	1.06	8	9.84	.39	20.08	14.13	13.54	5.000	7.87	1-1/4 x 7/8 x 6.50	7.76	10.16	9.65	23.94	7-1/2	1480
VC3235/16-2100TMCY	22.44	17 7109/17 7139	69.49	1.57	1.06	8	9.84	.39	20.08	14.13	13.54	5.000	7.87	1-1/4 x 7/8 x 6.50	7.76	10.16	9.65	23.94	10	1510
VC3245/15-2015TMCY	25.00	19 0000/19 0018	59.66	1.57	1.30	8	9.84	.39	22.05	14.57	14.61	5.500	7.87	1-1/4 x 7/8 x 7.87	5.39	6.93	6.10	15.24	1-1/2	1475
VC3245/16-2020TMCY	25.00	19 0000/19 0018	59.66	1.57	1.30	8	9.84	.39	22.05	14.57	14.61	5.500	7.87	1-1/4 x 7/8 x 7.87	5.39	6.93	6.10	15.24	2	1475
VC3245/16-2030TMCY	25.00	19 0000/19 0018	63.55	1.57	1.30	8	9.84	.39	22.05	14.57	14.61	5.500	7.87	1-1/4 x 7/8 x 7.87	5.39	6.93	7.48	17.95	3	1525
VC3245/16-2050TMCY	25.00	19 0000/19 0018	65.16	1.57	1.30	8	9.84	.39	22.05	14.57	14.61	5.500	7.87	1-1/4 x 7/8 x 7.87	6.30	8.46	7.48	17.95	5	1550
VC3245/16-2080TMCY	25.00	19 0000/19 0018	69.40	1.57	1.30	8	9.84	.39	22.05	14.57	14.61	5.500	7.87	1-1/4 x 7/8 x 7.87	7.76	10.16	9.65	23.94	7-1/2	1685
VC3245/16-2100TMCY	25.00	19 0000/19 0018	70.98	1.57	1.30	8	9.84	.39	22.05	14.57	14.61	5.500	7.87	1-1/4 x 7/8 x 7.87	7.76	10.16	9.65	23.94	10	1715
VC3255/17-2030TMCY	26.97	21 0000/21 0039	69.85	1.77	1.30	8	11.61	.39	24.02	15.55	15.71	6.250	9.45	1-1/4 x 7/8 x 9.45	5.39	6.93	7.48	17.95	3	2235
VC3255/17-2050TMCY	26.97	21 0000/21 0039	71.46	1.77	1.30	8	11.61	.39	24.02	15.55	15.71	6.250	9.45	1-1/4 x 7/8 x 9.45	6.30	8.46	7.48	17.95	5	2250
VC3255/17-2080TMCY	26.97	21 0000/21 0039	75.70	1.77	1.30	8	11.61	.39	24.02	15.55	15.71	6.250	9.45	1-1/4 x 7/8 x 9.45	7.76	10.16	9.65	23.94	7-1/2	2385
VC3255/17-2100TMCY	26.97	21 0000/21 0039	77.28	1.77	1.30	8	11.61	.39	24.02	15.55	15.71	6.250	9.45	1-1/4 x 7/8 x 9.45	7.76	10.16	9.65	23.94	10	2415
VC3265/19-2080TMCY	29.53	23 4375/23 4394	80.21	1.97	1.54	8	11.61	.39	25.98	16.81	16.87	6.625	11.81	1-1/4 x 7/8 x 9.45	7.76	10.16	9.65	23.94	7-1/2	3100
VC3265/19-2100TMCY	29.53	23 4375/23 4394	82.00	1.97	1.54	8	11.61	.39	25.98	16.81	16.87	6.625	11.81	1-1/4 x 7/8 x 9.45	7.76	10.16	9.65	23.94	10	3130

DIMENSIONS

SM-BEISTER WORM

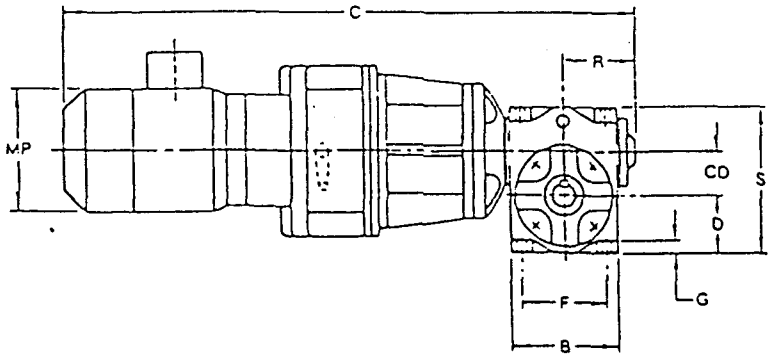

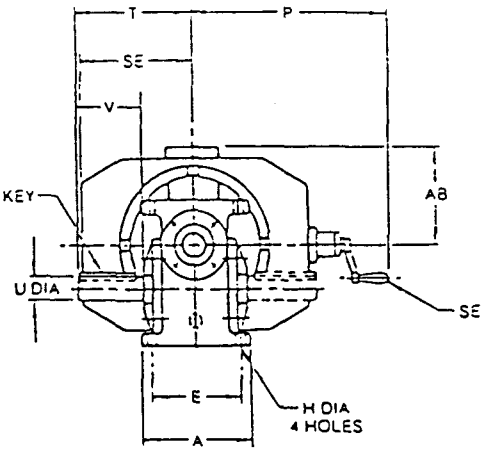

HP①	MODEL	A	B	C	D	E	F	G	H	P	R	S	T	AB	CD	MP	SE	U	V	KEY
1/4	2002TMCY - SM175	4.38	4.25	22.31	2.375	3.63	3.50	.50	.35	8.0	2.88	6.0	4.25	4.80	1.750	5.20	4.80	.7495 .7490	1.31	3/16 x 3/16
1/2	2005TMCY - SM200	5.0	5.25	24.21	2.687	4.13	4.25	.63	.41	8.0	3.50	6.75	4.88	4.80	2.00	5.20	4.80	.8745 .8740	1.75	3/16 x 3/16
3/4	2008TMCY - SM258	6.25	7.0	27.19	3.250	5.13	5.63	.75	.53	8.0	4.44	8.25	5.50	4.92	2.625	5.94	4.80	1.1245 1.1240	1.88	1/4 x 1/4
1	2010TMCY - SM300	6.25	7.0	27.19	3.625	5.13	5.63	.75	.53	8.0	4.44	9.0	5.88	4.92	3.00	5.94	4.80	1.2495 1.2490	2.25	1/4 x 1/4
1-1/2	2015TMCY - SM350	7.63	7.63	32.34	4.125	6.38	6.38	.88	.53	9.14	6.15	10.25	6.50	5.39	3.50	6.93	6.10	1.4995 1.4990	2.75	3/8 x 3/8
2	2020TMCY - SM350																			
3②	2020TMCY - SM400	8.38	8.38	33.41	4.500	7.38	7.38	.88	.53	9.14	6.69	11.50	7.38	5.39	4.00	6.93	6.10	1.6245 1.6240	2.75	3/8 x 3/8

NOTES: ① BEISTER MAY BE ROTATED 90° (HANDWHEEL UPRIGHT) ON UNITS 2008TMCY - SM258 THRU 2020TMCY - SM400.
② REDUCER SM400 USED FOR RATIO 50:1 AND ABOVE, WITH 2020T FRAME BEISTER.

T2T-96

178391 E

Lenze

Antriebstechnik

Mounting and operating instructions

Disco
Variable speed drives
type 11.700 size 02 - 03

Conetents

	Side
1. Technical description	5
2. Type code	5
3. Assembly	5
3.1 Electrical supply	5
4. Maintenance	6
5. Repair	6
5.1 Dismantling	6
5.1.1 Housing and flange cover	6
5.1.2 Inner sun	6
5.1.3 Output shaft	6
5.1.4 Flange	6
5.1.4.1 Worm gearbox	6
5.1.4.2 Helical gearbox and helical worm gearbox	6
5.1.4.3 Spur gear planetary drive in the differential drive	6
5.1.5 Input shaft	6
5.1.6 Hand wheel adjuster	7
5.1.7 Servo adjuster	7
5.1.8 Bevel gear adjuster	7
5.2 Assembly	7
5.2.1 Housing and flange cover	7
5.2.2 Flange	7
5.2.2.1 Worm gearbox	7
5.2.2.2 Helical gearbox and helical worm gearbox	7
5.2.2.3 Spur gear planetary drive in the differential drive	7
5.2.3 Inner sun	8
5.2.4 Input shaf	8
5.2.5 Hand wheel adjuster	8
5.2.6 Servo adjuster	8
5.2.7 Bevel gear adjuster	8
5.2.8 Assembly of the modules	8
5.2.9 Motor assembly	8
5.2.10 Adjusters	8
5.3 Speed setting	8
5.3.1 Hand wheel adjuster	8
5.3.2 Servo adjuster	9
5.3.2.1 Servo motor position I	9
5.3.2.2 Servo motor position II	9
6. Spare parts list	11
6.1 Disco variable speed drives series 11.700 size 02	11
6.2 Disco variable speed drives series 11.700 size 03	14
Service, branches and agencies	18

1. Technical description

The Disco variable speed drive is a planetary drive, where all functioning parts run in an oil bath. The planets and the planet carrier rotate around the driving inner sun. From the input shaft, the speed and the torque are transmitted to the inner sun. The double conical discs (planets) are driven by the inner sun and roll along the outer rings which are fixed at the housing. Therefore, the planets do not only rotate about their own axis, but also move around the inner sun, where they drive the planet carrier, which is connected to the output shaft.
The speed is adjusted by moving one of the outer rings laterally in the housing, via a cam profile, thus changing the air gap between the rings when rotating the adjustment spindle. The planets move on variable radii - which is controlled by the size of the air gap between the outer rings, thereby adjusting the output speeds infinitely within a 6:1 range. By combining single- or multi-stage helical, worm, or spur gear planetary systems, the output speed range can be adapted to suit individual requirements.

2. Type code

e.g. 11.700. 03. 00

Type
Disco size
Gearbox size

3. Assembly

Disco planetary variable speed drives must be assembled stressfree on a flat surface. They are built onto and up from their output cover. Care must be taken during assembly not to pressure or distort this cover. Otherwise strains may occur in the housing, which will have negative effects on the alignment of shafts and therefore on the bearing and gear teeth. The output shaft of the Disco plantary speed drive must be carefully aligned to the driving machine shaft. Minor misalignments can be compensated by fitting a flexible coupling.
Couplings, gearwheels, sprockets, etc. may only be mounted on the shaft ends by means of a screw as hammering may damage the bearings. Fill Disco drives with oil prior to start-up (see item 4.0).

3.1 Electrical supply

A potentiometer which is connected to the adjustment spindle via a worm pinion, transmits the position values of the spindle as partial voltage to a moving coil instrument (100V≈;1000Ω/V). Normally, the scale is not calibrated, but can be calibrated to output speeds. Special calibration on request. Power supply 220 V.

Caution:
Observe polarity when connecting the servo motor.

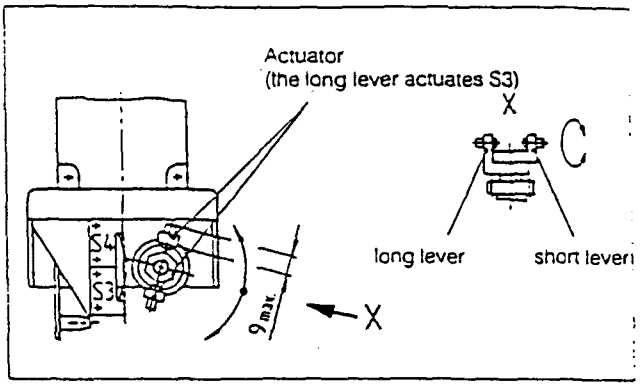

Circuit diagram of servo adjuster with potentiometer display.

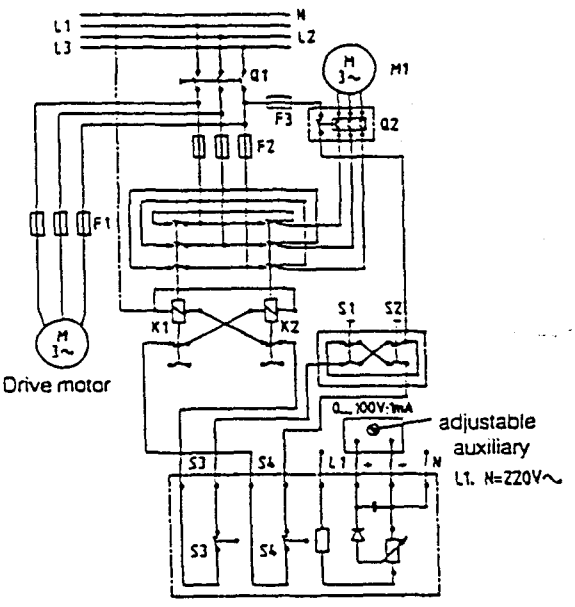

F_1, F_2, F_3	= Fuses	Note: The gearbox must be earthed via mounted elements (e.g. motors). If there is no earthing (connection at equal voltage level).
K_1, K_2	= Reversing contactors	
M1	= Servo-motor	
Q1	= Main switch	
Q2	= Motor protection switch	
S1, S2	= Push-buttons	
S3, S4	= Limit switches	

a) Servo motor position I (Standard design)
The servo motor is located on the left hand side when viewed from the motor end (spindle housing on top). When switching to the fast mode (counter-clockwise rotation of the actuators in the limit switch casing) the limit switch S4 (see figure) is actuated using an insulated screwdriver. When the polarity is correct, the servo motor and the actuator stop. If not, the direction of rotation must be changed by changing the polarity.

b) Servo motor position II
The servo motor is located at the right hand side when viewed from the motor end (spindle housing on top). When switching to the fast mode (clockwise

the limit switch S3 is actuated using an insulated screwdriver. When the polarity is correct, the servo motor and the actuator stop. If not, the direction of rotation must be changed by changing the polarity.

Caution: Live wires!

Caution:
The servo motor can be switched on to the slow mode, when the drive is at standstill, but switching to the fast mode with the drive at standstill is not permissible.

4. Maintenance

Disco drives are normally supplied without oil and must therefore be filled prior to start-up. We recommend oil types with a viscosity of approx. 32 $mm^2/sec \pm 10\%$ at 40° C (see Disco lubrication instructions).
Lubrication instructions for connected gearboxes can be ordered separately. The following quantities (in liters) are approximate values.

Disco planetary variable speed drive

Disco size	Mounting positions horizontal: spindle housing top	spindle housing side	spindle housing bottom	horizontal: output shaft bottom	vertical: output shaft top
02	0,4	0,3	0,4	0,4	0,4
03	0,4	0,5	0,8	0,6	0,6

Disco differential drive

Disco size	Mounting positions horizontal: spindle housing top	spindle housing side	spindle housing bottom	horizontal: output shaft bottom	vertical: output shaft top
02	0,5	0,4	0,5	0,4	0,4
03	0,5	0,6	1,0	1,0	1,0

We recommend to check the oil level regularly!

5. Repair

5.1 Dismantling

Adjust the drive to a medium speed. Drain oil.
Instructions such as "left"/"right" refer to the spare parts drawings.

5.1.1 Housing and flange cover

1. Remove flange-mounted electric motor (2.08), if any, from the drive.
2. Remove allen screws (4.45) and take out of spindle housing (4.01). Remove ball head stud (4.06).
3. Mark position of cover (3.01) or flange (3.02) relative to the housing (1.01).
4. Remove screws (0.30) and position drive vertically (input side up).
5. Pull off complete housing (1.01).
6. Mark position of cam ring (3.14) and movable outer ring (3.16) relative to the cover or flange (3.01 or 3.02) or, for differential drives, relative to the housing (3.04).

5.1.2 Inner sun

1. Remove stationary outer ring (1.02) and inner sun assembly (6.01 to 6.06).
2. Secure planets to prevent displacement! Press cup springs (6.05) over spring retaining plate (6.04) using a special tool, or a parallel vice.
3. Remove circlip (6.06) and release cup springs (6.05).

5.1.3 Output shaft (for drives without gearboxes)

1. Remove movable outer ring (3.16), ball cage (3.15), cam ring (3.14) and compression springs (3.27).
2. Remove screw (3.59) and press planet carrier (3.09) off the output shaft (3.05) using two levers.
3. For size 02, remove shaft seal (3.36) and scrap, remove circlips (3.39) and (3.14) and press output shaft out of the cover (3.01) to the right.

5.1.4 Flange (for drives with gearbox)

5.1.4.1 Worm gearbox

1. Remove circlip (3.51) pull off planet carrier (3.09) from the hub (3.08).
2. Remove setscrew (3.73) and pull off hub (3.08) from the input shaft of the worm gearbox.

5.1.4.2 Helical gearbox and helical worm gearbox

1. Punch out pin (3.61) and remove pinion (3.18) (not for pinion shaft 3.06)
2. Remove circlip (3.44) and press shaft (3.06 or 3.07) out of the flange to the right.

5.1.4.3 Spur gear planetary drive in the differential drive

1. Remove movable outer ring (3.16), ball cage (3.15), cam ring (3.14) and compression springs (3.27).
2. Remove circlip (3.51) and pull planet carrier (3.09) out of the planet gear carrier (3.25).
3. Remove screws (0.34) and pull cover (3.01) completely out of the housing (3.04).
4. For size 02, remove shaft seal (3.36) and scrap.
5. Remove circlips (3.38, 3.39 or 3.41) and press complete shaft (3.05) out of the bearing to the right.
6. Pull cylindrical pins (3.70) out of the planet gear carrier (3.25) via inside thread and remove pinion (3.24) with washers (3.69).
7. Remove circlip (3.46) and press planet gear carrier (3.25) with pinion shaft (3.23) out of the bearing.

5.1.5 Input shaft

1. Remove hex head bolt (0.28) and take out complete cover (2.01 to 2.23) from the housing (1.01).
2. For size 02, remove shaft seal (2.18) and scrap, remove circlips (2.20) and press shaft (2.02) out of the cover to the right.
3. For size 03, remove circlip (2.19) and press complete shaft (2.02) out of the cover to the left.

5.1.6 Hand wheel adjuster

1. Punch out pin (4.34) and pull off hand wheel (4.12).
2. Remove setscrew (4.39) and take out position indicator (4.14).
3. Remove normal torque plate (7.29) using two narrow screwdrivers.
4. Turn spindle (7.03) out of the guide-piece (7.04) and pull off the housing (7.01). Remove shim (7.31).

5.1.7 Servo adjuster

1. Before disassembly always disconnect from power supply!
2. Loosen setscrew (4.41) and pull off small geared motor (4.10).
3. Punch out pin (4.33) and pull off bush (4.08).
4. Loosen screws (5.13) from the housing (5.01, 5.02) and open housing.
5. Loosen allen screws (4.47) and remove housing (5.02).
6. Punch out pin (4.35) and pull off intermediate part (4.09).
7. Remove shaft seal (4.23) and scrap, and remove circlip (4.28).
8. Pull spindle (4.03) out of the housing (4.01), so that the ball bearing (4.20) is free.
9. Rotate spindle out of the guide piece (4.04).
10. Press bush (4.21) and shaft seal (4.24) out of the spindle housing (4.01).

5.1.8 Bevel gear adjuster

1. Loosen setscrew (4.40) and pull off housing (4.02).
2. Punch out pin (4.34) and pull off hand wheel (4.12).
3. Pull off circlip (4.32) and press end cap (4.27) out of the housing (4.02).
4. Pull shaft (4.05) out of the bushes (4.22).
5. Punch out pins (4.37, 4.38) and pull off bevel gears wheels (4.16, 4.15).

For further disassembly see section 5.1.7, items 7-10!

5.2 Assembly

Disco planetary speed drives are put together as modules and then assembled.

5.2.1 Housing or flange cover

(for drives without gearboxes)

Size 02:

1. Press in ball bearing (3.28) and fix using two circlips (3.38).
2. Press in shaft (3.05) with bush (3.11) and press ball bearing (3.29) in cover (3.01).
3. Assemble circlip (3.39) and shaft seal (3.36).Go on as explained under item 4, size 3!

Size 03:

1. Press in ball bearing (3.28) and assemble left circlip (3.41).
2. Press in shaft (3.05) with circlips (3.40) and ball bearing (3.29) in flange or cover (3.01).
3. Assemble right circlip (3.41) and shaft seal (3.36).
4. Fix planet carrier (3.09) using pins (3.07), washer (3.12) and screw (3.59) on the shaft (3.05).
5. Insert compression springs (3.27) and cam ring (3.14). Observe the mark on the cam ring relative to the housing.
6. Assemble ball cage (3.15) and movable outer ring (3.16).

5.2.2 Flange

(for variable speed drives with gearbox)

5.2.2.1 Worm gearbox

1. Assemble planet carrier (3.09) on bush (3.08), secure using circlip (3.51).
2. Push bush (3.08) on the input shaft of the worm gearbox, until dimension "a" is reached and fix using setscrew (3.73).

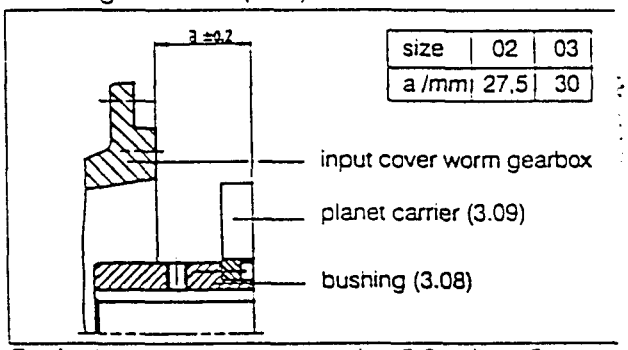

size	02	03
a /mm	27,5	30

For further assembly see section 5.2.1, item 5

5.2.2.2 Helical gearbox and helical worm gearbox

1. For size 02, assemble circlip (3.43) when designed with pinion shaft (3.06).
2. Press shaft (3.07) or pinion shaft (3.06) with ball bearing (3.31) from the right in the flange (3.02), assemble circlip (3.50), if necessary.
3. Assemble shaft seal (3.37), circlip (3.42) and ball bearing (3.30). Assemble circlip (3.44).
4. Assemble pinion (3.18) (not for pinion shaft 3.06).

For further assembly see section 5.2.1, item 4.

5.2.2.3 Spur gear planetary drive in the differential drive

1. For size 02, assemble ball bearing (3.28) and circlip (3.38) in cover (3.01).
   For size 03, assemble ball bearing (3.28) and le circlip (3.41) in cover (3.01).
2. Press shaft (3.05) with ball bearing (3.29), circlips (3.40) or bush (3.11) in cover and secure using circlip (3.39) or (3.41) right. Assemble shaft seal (3.36).
3. Press planet gear carrier (3.25) with pre-assembled pinion shaft (3.23) in bearing and secure using circlip (3.46).
4. Insert pinion (3.24) with washers (3.69) in planet gear carrier (3.25) and press in pins (3.70).
5. Mount pre-assembled cover (3.01) on housing (3.04) by using seal (0.26) and screws (0.34).

6. Assemble planet carrier (3.09) on planet gear carrier (3.25), secure using shim (3.71) und circlip (3.51).

For further assembly see section 5.2.1, item 5.

5.2.3 Inner sun

1. Left inner sun must be easily displaceable on the input shaft or motor shaft. Lay left inner sun (6.01) with the hub at the top on the assembly device.
2. Push right inner sun (6.02) with chamfer (approx. 1mm) at the bottom on the hub.
3. Push planets (6.03) with long journal at the bottom to the middle of the seating surface between the inner sun assembly and secure against displacement.
4. Push cup springs (6.05) on the hub in the correct sequence, lay spring retaining plate (6.04) with recess at the top and circlip (6.06) on cup springs (6.05).
5. Press together cup springs (6.05) over spring retaining plate (6.04) using an assembly device, assemble circlip (6.06).

Caution:
Check if the circlip fully rests in the keyway and is located in the recess of the spring retaining plate. After this, release the cup springs!

5.2.4 Input shaft

1. For size 02, assemble ball bearing (2.15) using circlips (2.19) in cover (2.01). Press in pre-assembled shaft (2.02), assemble circlip (2.20) and insert seal (2.18).
2. For size 03, assemble shaft (2.02) with ball bearing (2.15) and circlips (2.20) in cover (2.01). Assemble ball bearing (2.16), secure using circlip (2.19) and insert seal (2.18).

5.2.5 Hand wheel adjuster

1. Push spindle (7.03) with greased O-rings (7.23) into the housing (7.01).
2. Turn guide-piece (7.04) on the spindle (7.03).
3. Set shim (7.31) on spindle (7.03). Push spindle in flange sleeve (7.75) and press normal torque plate (7.29) on the spindle (7.03).
4. Assemble handwheel (4.12) using pin (4.34). Assemble position indicator (4.14), secure using setscrew (4.39).

5.2.6 Servo adjuster

1. Press bush (4.21) in spindle housing (4.01).
2. Push spindle (4.03) with ball bearing (4.20) in spindle housing (4.01).
3. Rotate guide-piece (4.04) on spindle and press spindle completely in.
4. Assemble circlip (4.28) and shaft seal (4.23).
5. Assemble shaft seal (4.24) and secure intermediate part (4.09) using pin (4.35).
6. Secure bush (4.08) using pin (4.33).
7. Do not yet assemble small geared motor (4.10) and limit switch housing (5.02 and 5.01)! (see section 5.3.2)

5.2.7 Bevel gear adjuster

1. Assembly as explained under section 5.2.6, item 1-5.
2. Secure bevel gears (4.16, 4.15) using pins (4.37, 4.38)
3. Push shaft (4.05) in bushes (4.22).
4. Assemble circlip (4.32).
5. Assemble handwheel (4.12) and hammer in pin (4.34).
6. Assemble housing (4.02) only after setting of the dead stops at the spindle housing (4.01) (see section 5.3.2).
7. Bevel gears have a soft running. The permissible axial tolerance in X-direction is maximum 0.2 mm.

5.2.8 Assembly of the modules

1. Lay seal (0.26) on cover (3.01) or flange (3.02) or housing (3.04).
2. Push stationary outer ring (1.02) in housing (1.01) and slightly misalign or support in the spindle housing recess by using a bolt.
3. Lay complete inner sun (6.01 to 6.06) on movable outer ring (3.16) thereby inserting the journals of the planets (6.03) in the planet bearings (3.10).
4. Lay housing (1.01) vertically on the pre-assembled flange (3.02), cover (3.01) or housing (3.04). Observe mark at the flange or housing.
5. Secure using hex head bolts (0.30).
6. Screw in ball head studs (4.06).

5.2.9 Motor assembly

1. Lay seal (0.25) on housing (1.01).
2. Cover motor shaft end with lubricant and vertically insert into the inner sun (6.01).
3. Secure motor (2.08) and housing (1.01) using hex head bolts (2.30).

5.2.10 Adjusters

1. Lay handwheel or servo adjuster with seal (4.25) on housing (1.01). Ball head stud (4.06) must slide in the guide piece (4.04).
2. Fix adjuster using allen screws (4.45) at the housing. See chapter 5.3.

5.3 Speed setting

1. Fill gearbox oil up to the middle of the oil sight glass, in individual cases up to the oil check plug, according to the mounting position.

5.3.1 Handwheel adjuster

Setting is also necessary when the drive has been disassembled!

1. Bolt handwheel adjuster in the desired position with a seal and turn towards the fast mode, until a resistance is perceptible.
2. Switch on motor and set minimum idle speed using tacho tachometer according to the table.

3. Fix setscrew (1.04) against guide piece (4.04) in housing (1.01). Slightly fix using counter nut (1.05).
4. Set maximum idle speed according to the table.
5. Fix setscrew (1.04) against guide piece (4.04) in housing (1.01). Slightly fix using counter nut (1.05).
6. When the driving motor is at standstill, change the adjustment from maximum to minimum. Switch on drive motor. Check speeds and correct, if necessary. Tighten nuts (1.05), without turning setscrews (1.04).

No-load output speeds

	Type / Size	11.710 02	11.710 03	11.740 02	11.740 03
4-pole motors	$n_{min}(min^{-1})$	180^{-5} 1) 200^{+5}	185^{-5} 1) 205^{+5}	$0^{-2.5}$ 1) $25^{+2.5}$	$0^{-2.5}$ 1) $25^{+2.5}$
	$n_{max}(min^{-1})$	1020^{+10} 1) 990^{-10}	1030^{+10} 1) 1000^{-10}	940^{+10} 1) 905^{-10}	940^{+10} 1) 905^{-10}
2-pole motors	$n_{min}(min^{-1})$	360^{-10} 1) 390^{+10}	370^{-10} 1) 390^{+10}	0^{+5} 1) 30^{+5}	0^{+5} 1) 30^{+5}
	$n_{max}(min^{-1})$	2040^{+15} 1) 2000^{-15}	2015^{+15} 1) 1975^{-15}	1880^{+10} 1) 1850^{-10}	1880^{+10} 1) 1850^{-10}

Dead stops as for hand wheel adjusters
1) Switching points for limits switches in case of servo adjusters.

5.3.2 Servo adjuster

5.3.2.1 Servo motor position I (Standard design)

1. Assemble spindle housing (4.01) and seal (4.25) in the corresponding position using screws (4.45) and spring lock washer (4.46) on housing (1.01). The guide piece (4.04) must slide on the ball head stud (4.06)!
2. Connect main motor (2.08) and switch on.
3. Adjust minimum idle speed n_{min} (see table) by hand using a hand tacho. Screw in setscrew (1.04) against guide piece (4.04) in housing (1.01). Tighten nut (1.05).
4. Adjust maximum idle speed n_{max} (see table) by hand using a hand tacho. Screw in setscrew (1.04) against guide piece (4.04) in housing (1.01). Tighten nut (1.05).
5. Set medium speed by hand!
6. Assemble small geared motor (4.10) on spindle housing (4.01). Before, cover the output shaft of the small geared motor with ant-corrosion agent, in order to avoid frictional corrosion. Cover setscrew (4.41) with screw locking glue and tighten.
7. Assemble limit switch housing (5.02) with allen screws (4.47) and shakeproof washers (4.48) at spindle housing (4.01). Observe gearing of worm shaft (4.17) and worm wheel (5.08).
8. Connect power supply for small geared motor. Check polarity of the servo motor according to section 3.1 item a) or b) and change polarity, if necessary.
9. Set speed according to the lowest switching point for the limit switch (see table) for jogging. Find out the direction of rotation of the wiper in the potentiometer. The wiper moves towards the zero position of the multiturn potentiometer. The setscrew (5.14) in the actuator may have to be aching the lowest switching point for limit switches, the wiper should not be at the beginning of the multiturn potentiometer, the potentiometer must be adjusted. For this, remove setscrew (5.15) in the worm gear (5.08). Turn actuactor (5.03) until wiper is at the beginning of the multiturn potentiometer. Retighten setscrew (5.15) in the worm gear (5.08).
10. Turn setscrew (5.11) in the actuator with long lever (5.03) against the limit switch (S3) (see section 3.1), until you hear it switching. Tighten actuator (5.03) using setscrew (5.14).
11. Slightly increase idle speed and approach to the lower switching point, make fine setting using setscrew (5.11) if necessary. Check with hand tacho.
12. In the jogging mode, select the speed according to the upper switching point for limit switches (see table) using hand tacho. Loosen setscrew (5.14) in the actuator with short lever (5.03).
13. Turn setscrew (5.11) in the actuator with short lever (5.03) against limit switch (S4) (see section 3.1) until you hear it switching. Tighten actuator (5.03) using setscrew (5.14).
14. Slightly lower idle speed and approach to the upper switching point for limit switches, make fine setting using setscrew (5.11) if necessary. Check using hand tacho.
15. Again approach both switching points and correct, if necessary.
16. Close housing (5.02) with housing (5.01), seal (5.19) and screws (5.13).

Caution:

If Disco variable speed drives are subsequently modified from servo motor position I to servo motor position II, the two plug-in contacts on the back of the board (5.04) in the limit switch housing (5.02) must be interchanged. In this case, proceed according to section 5.3.2.2 "servo motor position II", which applies for Disco variable speed drives with servo motor position II as standard.

5.3.2.2 Servo motor position II

1. Assemble spindle housing (4.01) and seal (4.25) in the corresponding position using screws (4.45) and spring lock washer (4.46) on housing (1.01). The guide piece (4.04) must slide on the ball head studs (4.06)!
2. Connect main motor (2.08) and switch on.
3. Adjust minimum idle speed n_{min} (see table) by hand using a hand tacho. Screw in setscrew (1.04) against guide piece (4.04) in housing (1.01). Tighten nut (1.05).
4. Adjust maximum idle speed n_{max} (see table) by hand using a hand tacho. Screw in setscrew (1.04) against guide piece (4.04) in housing (1.01). Tighten nut (1.05).
5. Set medium speed by hand!
6. Assemble small geared motor (4.10) on spindle housing (4.01). Before, cover the output shaft of the small geared motor with anti-corrosion agent, in order to avoid frictional corrosion. Co-

ver setscrew (4.41) with screw locking glue and tighten.

7. Assemble limit switch housing (5.02) with allen screws (4.47) and shakeproof washers (4.48) at spindle housing (4.01). Observe gearing of worm shaft (4.17) and worm wheel (5.08).
8. Connect power supply for small geared motor. Check polarity of the servo motor according to section 3.1 item a) or b) and change polarity, if necessary.
9. Set speed according to the lowest switching point for the limit switch (see table) for jogging. Find out the direction of rotation of the wiper in the potentiometer. The wiper moves towards the zero position of the multiturn potentiometer. The setscrew (5.14) in the actuator may have to be released using a long lever (5.03). If, after reaching the lowest switching point for limit switches, the wiper should not be at the beginning of the multiturn potentiometer, the potentiometer must be adjusted. For this, remove setscrew (5.15) in the worm gear (5.08). Turn actuactor (5.03) until wiper is at the beginning of the multiturn potentiometer. Retighten setscrew (5.15) in the worm gear (5.08).
10. Turn setscrew (5.11) in the actuator with short lever (5.03) against the limit switch (S4) (see section 3.1), until you hear it switching. Tighten actuator (5.03) using setscrew (5.14).
11. Slightly increase idle speed and approach to the lower switching point, make fine setting using setscrew (5.11) if necessary. Check with hand tacho.
12. In the jogging mode, select the speed according to the upper switching point for limit switches (see table) using hand tacho. Loosen setscrew (5.14) in the actuator with long lever (5.03).
13. Turn setscrew (5.11) in the actuator with long lever (5.03) against limit switch (S3) (see section 3.1) until you hear it switching. Tighten actuator (5.03) using setscrew (5.14).
14. Slightly lower idle speed and approach to the upper switching point for limit switches, make fine setting using setscrew (5.11) if necessary. Check using hand tacho.
15. Again approach both switching points and correct, if necessary.
16. Close housing (5.02) with housing (5.01), seal (5.19) and screws (5.13).

6. Spare parts list

6.1 Disco variable speed drives series 11.700 size 02

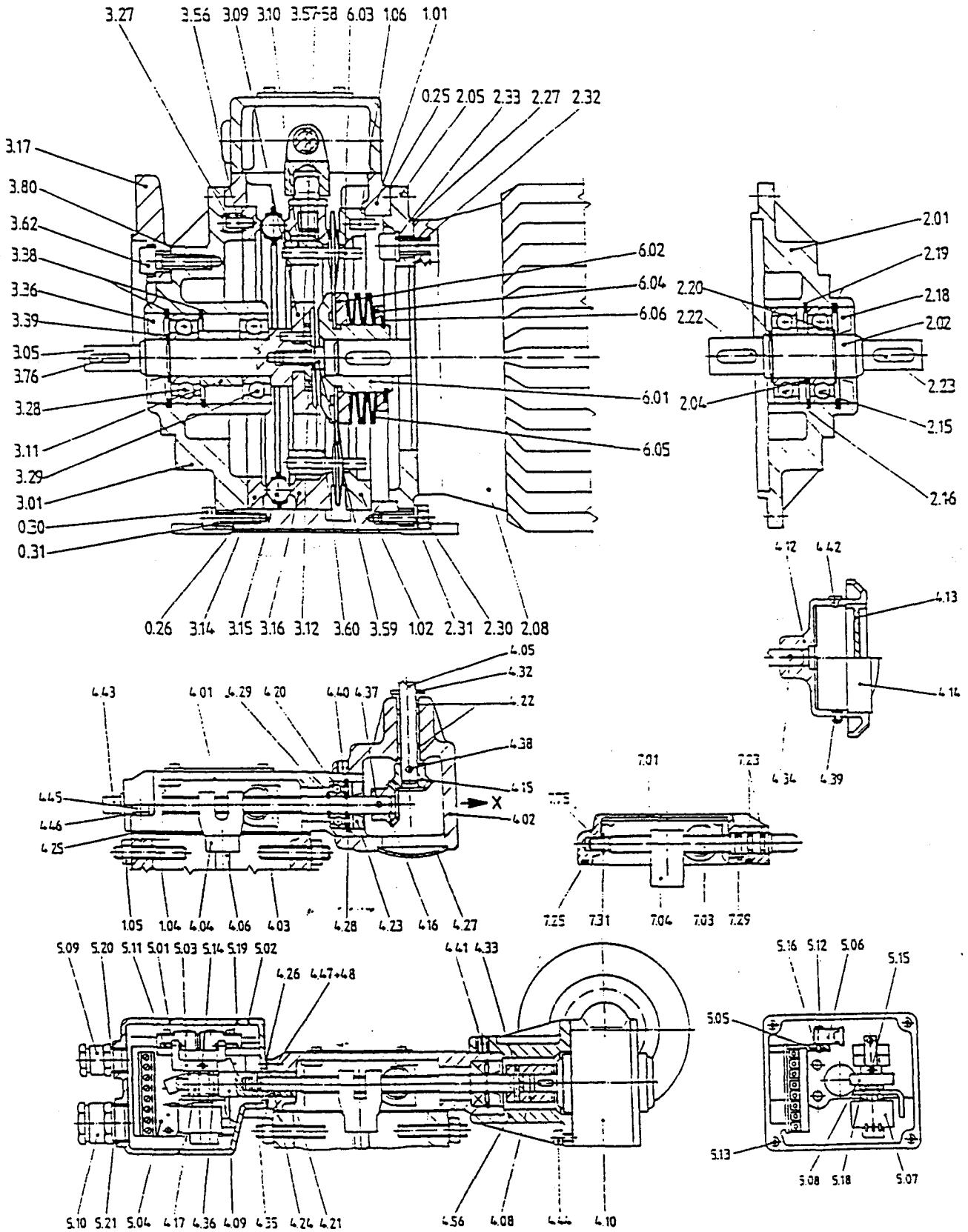

Suitable for mounting of

helical and helical worm gearboxes

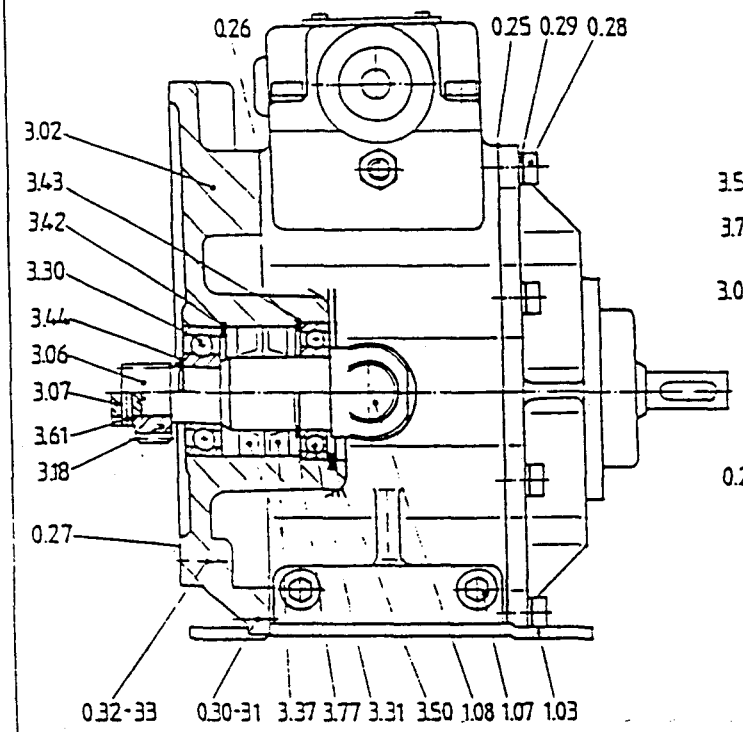

worm gearboxes

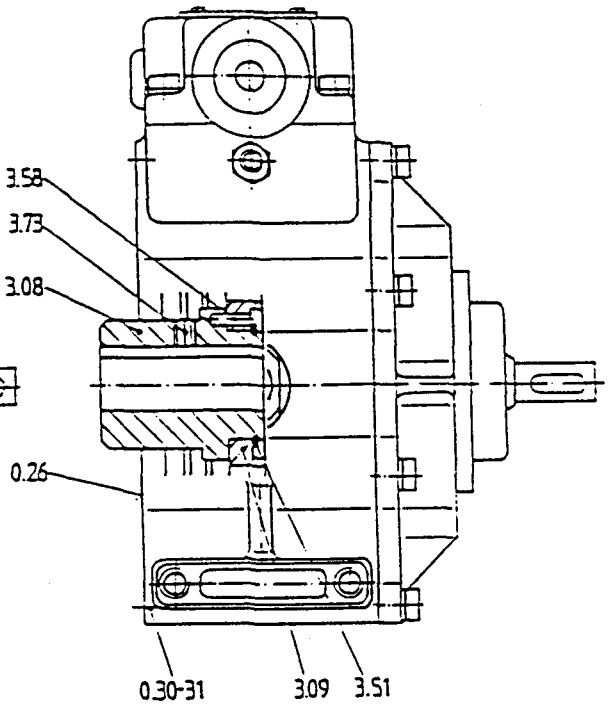

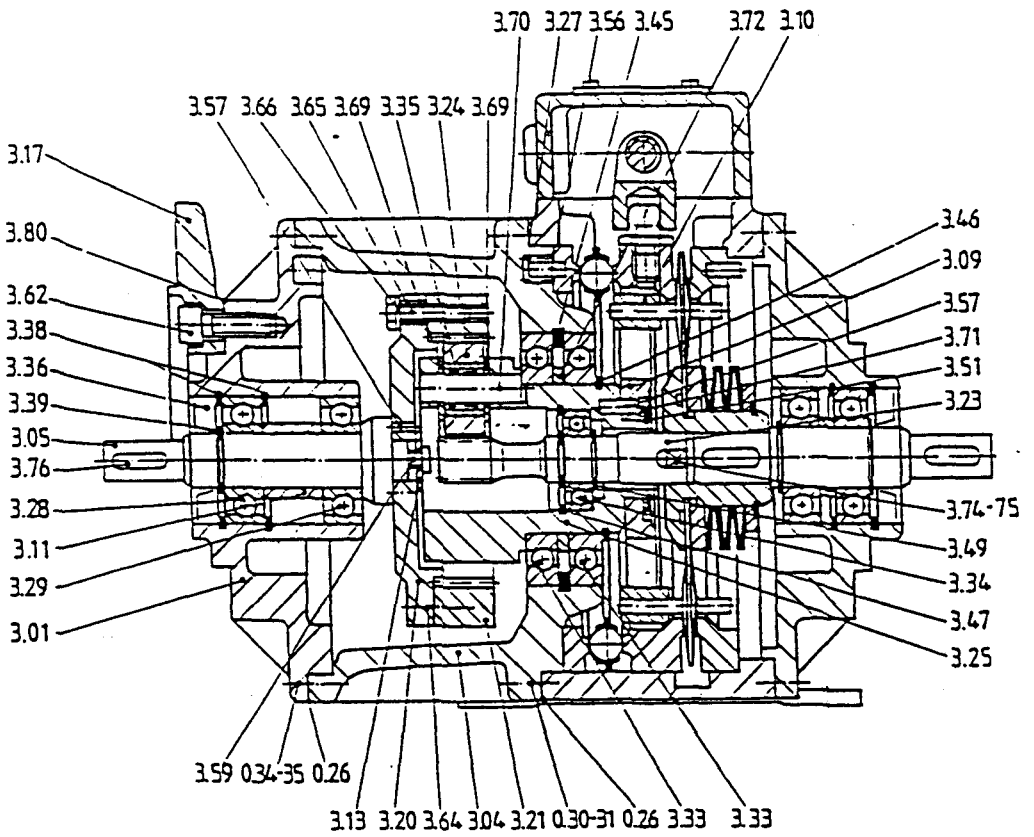

6.2 Disco variable speed drives series 11.700 size 03

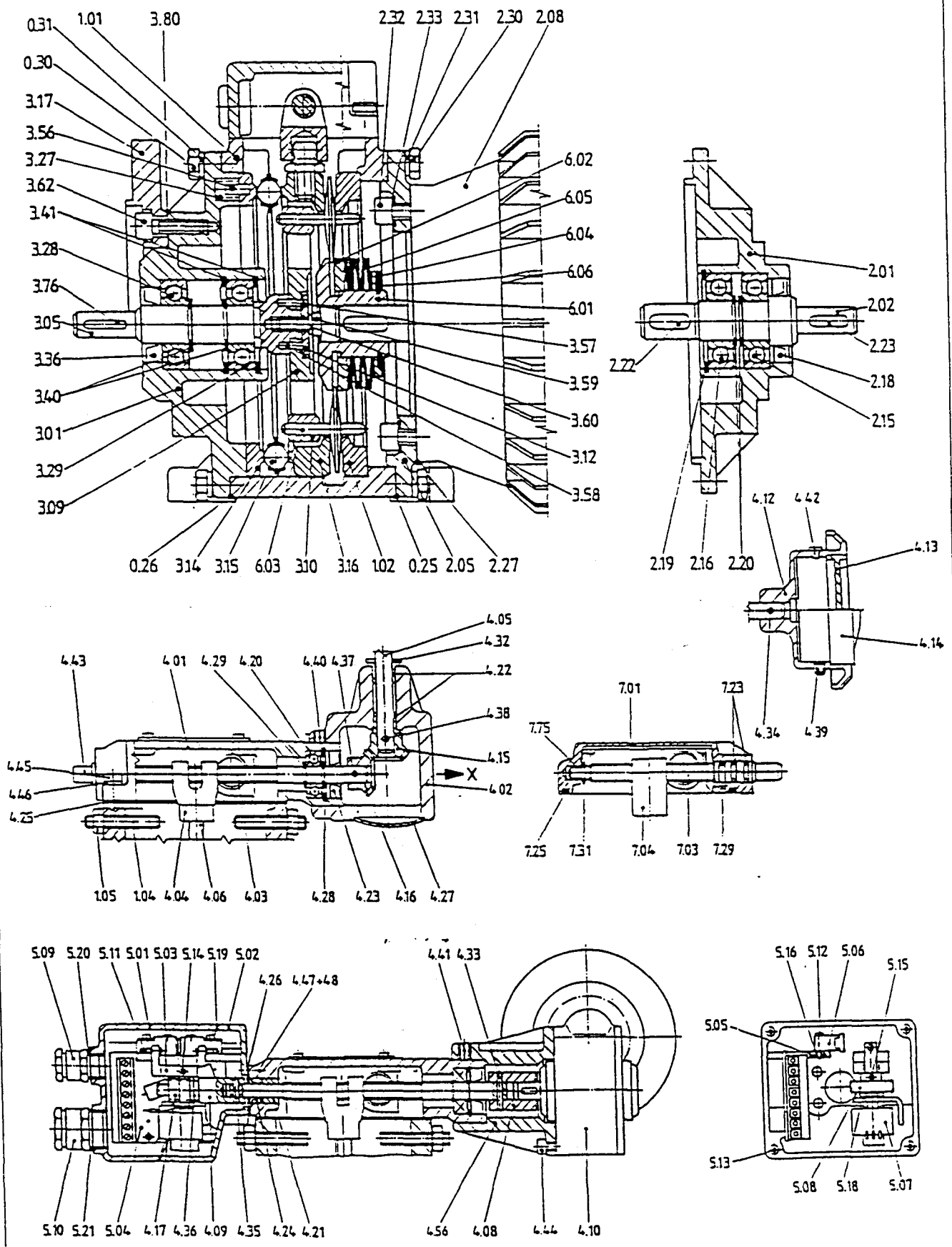

Item	Description
0.25	Gasket
0.26	Gasket
0.27	Gasket
0.28	Hex. head screw
0.29	Locking washer
0.30	Socket head cap screw
0.31	Spring washer
0.32	Socket head cap screw
0.33	Spring washer
0.34	Screw
0.35	Spring washer
0.35	Seal ring 1)
1.01	Housing
1.02	Stationary outer ring
1.03	Foot
1.04	Set screw
1.05	Seal-Lock hex. nut
1.06	Dowel pin
1.07	Socket head cap screw
1.08	Oil sight glass
2.01	Cover
2.02	Shaft
2.04	Bush
2.05	Flange
2.08	Motor (3-phase)
2.15	Deep groove ball bearing
2.16	Deep groove ball bearing
2.18	Shaft seal
2.19	Circlip
2.20	Circlip
2.22	Key
2.23	Key
2.27	Gasket
2.30	Hex. head screw
2.31	Locking washer
2.32	Socket head cap screw
2.33	Seal ring
3.01	Cover
3.02	Flange
3.04	Housing
3.05	Shaft
3.06	Pinion shaft
3.07	Shaft
3.08	Bush
3.09	Planet carrier
3.10	Planet bearing
3.11	Bush
3.12	Washer
3.13	Washer
3.14	Cam ring
3.15	Ball cage
3.16	Movable outer ring
3.17	Flange
3.18	Pinion
3.20	Outer ring gear carrier
3.21	Outer ring gear
3.23	Pinion shaft
3.24	Pinion
3.25	Planet gear carrier
3.27	Pressure spring
3.28	Deep groove ball bearing
3.29	Deep groove ball bearing

Item	Description
3.30	Deep groove ball bearing
3.31	Deep groove ball bearing
3.33	Deep groove ball bearing
3.34	Deep groove ball bearing
3.35	Needle bush
3.36	Shaft seal
3.37	Shaft seal
3.38	Circlip
3.39	Circlip
3.42	Circlip
3.43	Circlip
3.44	Circlip
3.45	Circlip
3.46	Circlip
3.47	Circlip
3.49	Circlip
3.50	Circlip
3.51	Circlip
3.56	Dowel pin
3.57	Dowel pin
3.58	Dowel pin
3.59	Socket head cap screw
3.60	Spring washer
3.61	Dowel pin
3.62	Socket head cap screw
3.64	Dowel pin
3.65	Hex. head screw
3.66	Spring washer
3.69	Washer
3.70	Cylindrical pin
3.71	Shim
3.72	Shim
3.73	Set screw
3.74	Key
3.75	Dowel pin
3.76	Key
3.77	Circlip
3.80	Gasket
4.00	Spindle housing, compl.
4.01	Spindle housing
4.02	Housing
4.03	Spindle
4.04	Guide-piece
4.05	Shaft
4.06	Speed control stud
4.08	Bush
4.09	Adapter
4.10	Small worm geared motor
4.12	Handwheel
4.13	Direction indicator
4.14	Position indicator
4.15	Bevel gear
4.16	Bevel gear
4.17	Worm
4.20	Deep groove ball bearing
4.21	Bush
4.22	Collar bush
4.23	Shaft seal
4.24	Shaft seal
4.25	Gasket
4.26	Gasket
4.27	End cover
4.28	Circlip
4.29	Circlip

Item	Description
4.32	Seeger ring
4.33	Dowel pin
4.34	Dowel pin
4.35	Dowel pin
4.36	Dowel pin
4.37	Dowel pin
4.38	Dowel pin
4.39	Set screw
4.40	Set screw
4.41	Set screw
4.42	Conical plug
4.43	Protective cap
4.44	Socket head cap screw
4.45	Socket head cap screw
4.46	Spring washer
4.47	Socket head cap screw
4.48	Locking washer
4.56	Bell housing
5.00	Microswitch housing, compl.
5.01	Housing
5.02	Housing
5.03	Actuator
5.04	Complete board
5.05	Metal sheet
5.06	Microswitch
5.07	Pre-set potentiometer
5.08	Wormwheel
5.09	Gland connection
5.10	Gland connection
5.11	Set screw
5.12	Socket head cap screw
5.13	Screw
5.14	Set screw
5.15	Set screw
5.16	Leveling piece
5.18	Locking washer
5.19	Gasket
5.20	O-ring seal
5.21	O-ring seal
6.00	Complete inner sun
6.01	LH inner sun
6.02	RH inner sun
6.03	Planet
6.04	Spring retaining cap
6.05	Cup spring
6.06	Circlip
7.00	Spindle housing, compl.
7.01	Spindle housing
7.03	Spindle
7.04	Guide-piece
7.23	O-ring seal
7.25	Gasket
7.29	Fixing metal sheet
7.31	Shim
7.75	Collar bush

1)For the screws (0.34) inside of the oval flange of the differential drive with helical gearbox

When ordering spare parts please quote :
Type and no. as shown on type plate, position and description of the spare part as shown in the spare parts list and no. of the installation and operating instructions.
Pos. 7.00 (7.01...7.75): only complete replaceable.

Suitable for mounting of

helical and helical worm gearboxes

worm gearboxes

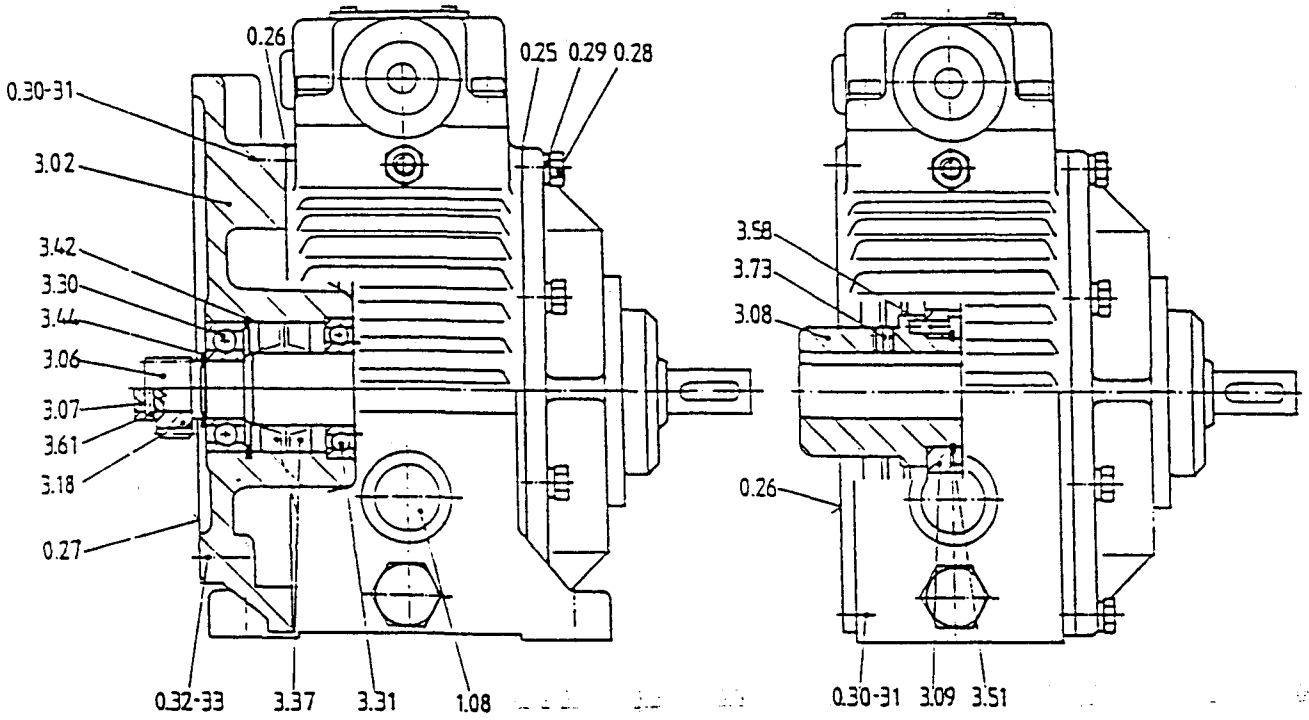

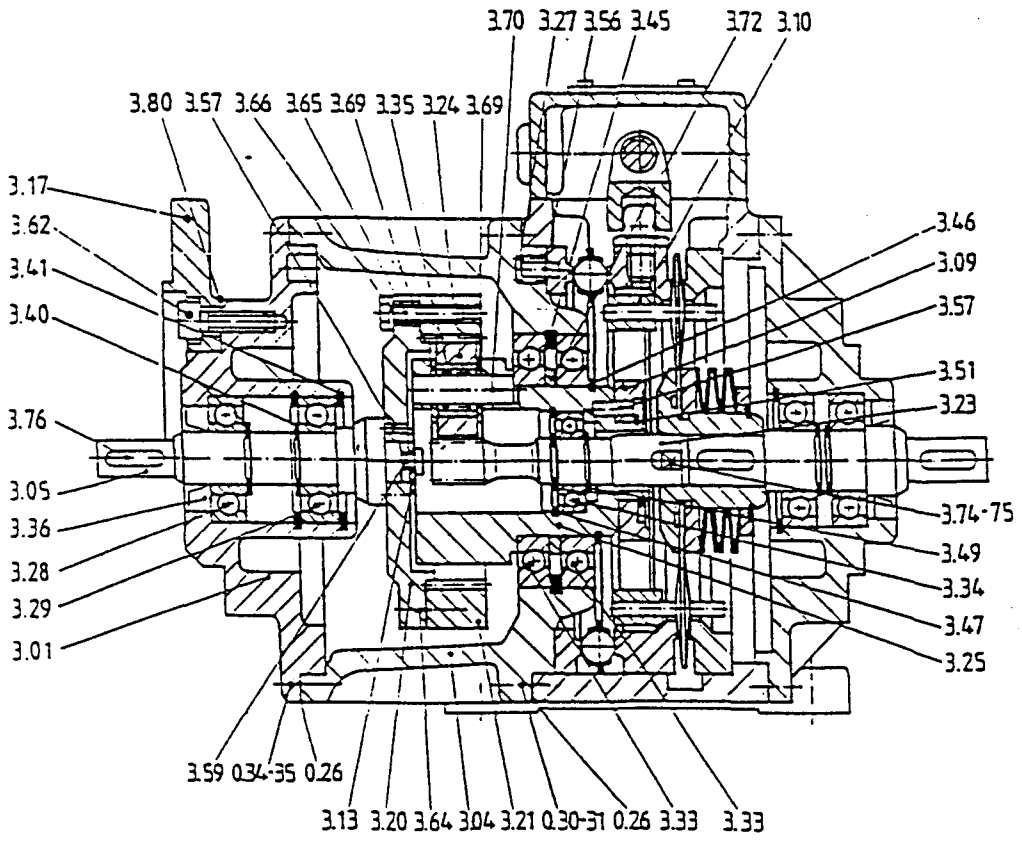

Item	Description
0.25	Gasket
0.26	Gasket
0.27	Gasket
0.28	Hex. head screw
0.29	Spring washer
0.30	Socket head cap screw
0.31	Spring washer
0.32	Socket head cap screw
0.33	Spring washer
0.34	Screw
0.35	Spring washer
0.35	Seal ring 1)
1.01	Housing
1.02	Stationary outer ring
1.04	Set screw
1.05	Seal-Lock hex. nut
1.08	Oil sight glass
2.01	Cover
2.02	Shaft
2.05	Flange
2.08	Motor (3-phase)
2.15	Deep groove ball bearing
2.16	Deep groove ball bearing
2.18	Shaft seal
2.19	Circlip
2.20	Circlip
2.22	Key
2.23	Key
2.27	Gasket
2.30	Hex. head screw
2.31	Locking washer
2.32	Socket head cap screw
2.33	Seal ring
3.01	Cover
3.02	Flange
3.04	Housing
3.05	Shaft
3.06	Pinion shaft
3.07	Shaft
3.08	Bush
3.09	Planet carrier
3.10	Planet bearing
3.12	Washer
3.13	Washer
3.14	Cam ring
3.15	Ball cage
3.16	Movable outer ring
3.17	Flange
3.18	Pinion
3.20	Outer ring gear carrier
3.21	Outer ring gear
3.23	Pinion shaft
3.24	Pinion
3.25	Planet gear carrier
3.27	Pressure spring
3.28	Deep groove ball bearing
3.29	Deep groove ball bearing
3.30	Deep groove ball bearing
3.31	Deep groove ball bearing
3.33	Deep groove ball bearing
3.34	Deep groove ball bearing
3.35	Needle bush
3.36	Shaft seal
3.37	Shaft seal

Item	Description
3.40	Circlip
3.41	Circlip
3.42	Circlip
3.44	Circlip
3.45	Circlip
3.46	Circlip
3.47	Circlip
3.49	Circlip
3.51	Circlip
3.56	Dowel pin
3.57	Dowel pin
3.59	Socket head cap screw
3.60	Spring washer
3.61	Dowel pin
3.62	Socket head cap screw
3.64	Dowel pin
3.65	Hex. head screw
3.66	Spring washer
3.69	Washer
3.70	Cylindrical pin
3.72	Shim
3.73	Set screw
3.74	Key
3.75	Dowel pin
3.76	Key
3.80	Gasket
4.00	Spindle housing, compl.
4.01	Spindle housing
4.02	Housing
4.03	Spindle
4.04	Guide-piece
4.05	Shaft
4.06	Speed control stud
4.08	Bush
4.09	Adapter
4.10	Small worm geared motor
4.12	Handwheel
4.13	Direction indicator
4.14	Position indicator
4.15	Bevel gear
4.16	Bevel gear
4.17	Worm
4.20	Deep groove ball bearing
4.21	Bush
4.22	Collar bush
4.23	Shaft seal
4.24	Shaft seal
4.25	Gasket
4.26	Gasket
4.27	End cover
4.28	Circlip
4.29	Circlip
4.32	Seeger ring
4.33	Dowel pin
4.34	Dowel pin
4.35	Dowel pin
4.36	Dowel pin
4.37	Dowel pin
4.38	Dowel pin
4.39	Set screw
4.40	Set screw
4.41	Set screw
4.42	Conical plug
4.43	Protective cap

Item	Description
4.44	Socket head cap screw
4.45	Socket head cap screw
4.46	Spring washer
4.47	Socket head cap screw
4.48	Locking washer
4.56	Bell housing
5.00	Microswitch housing, compl.
5.01	Housing
5.02	Housing
5.03	Actuator
5.04	Complete board
5.05	Metal sheet
5.06	Microswitch
5.07	Pre-set potentiometer
5.08	Wormwheel
5.09	Gland connection
5.10	Gland connection
5.11	Set screw
5.12	Socket head cap screw
5.13	Screw
5.14	Set screw
5.15	Set screw
5.16	Leveling piece
5.18	Locking washer
5.19	Gasket
5.20	O-ring seal
5.21	O-ring seal
6.00	Complete inner sun
6.01	LH inner sun
6.02	RH inner sun
6.03	Planet
6.04	Spring retaining cap
6.05	Cup spring
6.06	Circlip
7.00	Spindle housing, compl.
7.01	Spindle housing
7.03	Spindle
7.04	Guide-piece
7.23	O-ring seal
7.25	Gasket
7.29	Fixing metal sheet
7.31	Shim
7.75	Collar bush

1)For the screws (0.34) inside of the oval flange of the differentia drive with helical gearbox

When ordering spare parts please quote :
Type and no. as shown on type plate, position and description of the spare part as shown in the spare parts list and no. of the installation and operating instructions.
Pos. 7.00 (7.01...7.75): only complete replaceable.

Lenze

Worldwide

Head Office (Mechanical Drives)

Lenze GmbH & Co KG Extertal
Postfach 12 50
W-4923 Extertal
Sitz: Extertal-Bösingfeld
Breslauer Str. 3
☎ (0 52 62) 401-0, Telex: 9 31 526
Teletex 52 62 810, Telefax (05262)2715

Head Office (Elektronic Drives)

Lenze GmbH & Co KG Aerzen
Postfach 10 13 52
W-3250 Hameln 1
Sitz: Aerzen 2/Gr. Berkel
Hans-Lenze-Str. 1
W-3258 Aerzen 2
☎ 05154/82-0, Telex 92 853
Teletex 51 54 11, Telefax 05154/4040, 2491

Berlin

Lenze GmbH & Co KG
Antriebstechnik Nordwest
Niederlassung Berlin
Hedwigstr. 14
W-1000 Berlin 41
☎ (0 30) 8 51 88 50
Telefax (0 30) 8 51 70 91

Hamburg

Lenze GmbH & Co KG
Antriebstechnik Nordwest
Niederlassung Hamburg
Stormarnring 20
W-2000 Stapelfeld
☎ (0 40) 6 77 70 59
Telefax (0 40) 6 77 80 86

Bad Nenndorf

Lenze GmbH & Co KG
Antriebstechnik Nordwest
Im Niederfeld 1-3
W-3052 Bad Nenndorf
☎ (0 57 23) 20 17 -19
Telefax (0 57 23) 68 08

Moers

Lenze GmbH & Co KG
Antriebstechnik West
Postfach 18 09, Uerdinger Str. 48
W-4130 Moers 1
☎ (0 28 41) 2 39 06, Telex: 8 121 244
Telefax (0 28 41) 1 83 42

Herborn

Lenze GmbH & Co KG
Antriebstechnik Mitte
Postfach 14 63
Westerwaldstraße 36
W-6348 Herborn
☎ (0 27 72) 5 30 75 - 8
Telefax (0 27 72) 5 30 79

Waiblingen

Lenze GmbH & Co KG
Antriebstechnik
Schänzle 8, Postfach 14 33
W-7050 Waiblingen
☎ (0 71 51) 5 90 24
Telefax (0 71 51) 5 73 41

Rottweil

Lenze GmbH & Co KG
Antriebstechnik Süd
Niederlassung Rottweil
Zimmerner Straße 54-56
W-7210 Rottweil
☎ (07 41) 85 20
Telefax (07 41) 42 90 1

Karlsruhe

Lenze GmbH & Co KG
Antriebstechnik Süd
Niederlassung Karlsruhe
Saarlandstraße 83-91
W-7500 Karlsruhe 21
☎ (07 21) 956 85-0
Telefax (07 21) 55 70 46

München

Lenze GmbH & Co KG
Antriebstechnik Süd
Niederlassung München
Erlenstraße 1
W-8032 Locham
☎ (0 89) 8 54 40 10
Telefax (0 89) 8 54 41 98

Nürnberg

Lenze GmbH & Co KG
Antriebstechnik Süd
Niederlassung Nürnberg
Wendelsteiner Straße 2
W-8508 Wendelstein 2
OT Röthenbach/St. Wolfgang
☎ (0 91 29) 90 11 - 0
Telefax (0 91 29) 81 19

Döbeln

Lenze GmbH & Co KG
Antriebstechnik Döbeln
Grimmaische Straße 78
O-7301 Döbeln
☎ (0 34 31) 2304 - 05
Telefax (0 34 31) 41141

Argentina

E.R.H.S.A.
Ernesto Reich i Hijo S.A.I.C.
Giradot 1368
RA-1427 Buenos Aires
☎ (01) 5 52-92 71 / 8971 / 95 55
Telex 25 207 RVSTA
Telefax (01) 5 52 - 36 11

Australia

FCR Automation Pty. Ltd.
23 McArtur's Road
P.O. Box 359, Altona North,
Aus-3025 Melbourne, Australia
☎ (03) 3 99 1511
Telefax (03) 3 99 1431

Austria

Lenze Antriebstechnik Ges.m.b.H.
Postfach 21
Mühlenstraße 3,
A-4470 Enns
☎ (0 72 23) 34 21 - 0
Telex 229 371, 229 166
Telefax (0 72 23) 32 80

Belgium

Lenze p.v.b.a.
Nordenlaan 133, bus 15
B-2030 Antwerpen
☎ (03) 5 42 62 00
Telefax (03) 5 41 37 54

Bulgaria

see Austria

Canada

see USA

Chile

Sargent S.A.
Tecnica Thomas C. Sargent
S.A.C.e.I.
Casilla 166-D
RCH-Santiago, Chile
☎ (02) 6 99 15 25
Telex 40 516 Sarge CL
4 40 429 Sarge CZ
Telefax (02) 698 39 89

Columbia

Industrias Ramfé Ltda.
CRA. 69 No. 18-96
P.O Box 80425
CO-Bogotá
☎ 2 92 36 36, 2 92 22 66
Telefax 2 92 61 29

CSFR

Lenze Antriebstechnik GmbH
int. a. poradenské stredisko
ul. 17. listopadu 510
CS-549 41 Cerveny Kostelec
☎ 0441 / 6 22 90
Telefax 0441 / 6 15 18

Denmark

Leomotor A/S
Ingenior- & Handelsfirma
Stubmøllevej 35-37
Postbox 438
DK-2450 København SV
☎ 36 30 66 66
Telex 19 166
Telefax 36 30 64 33

Leomotor A/S
Enebrvej 11
DK-8653 Them
☎ 86 84 75 33
Telefax 86 84 83 53

Egypt

Farid Hassanen & Co.
81, Matbaa Ahleia Str.
ET-Boulac-Cairo
☎ (00202) 76 46 56, 76 91 44
77 48 97, 76 94 01
Telex 22 936 F.H.C. UN
Telefax (00202) 76 97 41

Finland

Relimex Oy
P.O. Box 35
SF-02271 Espoo
Hannuksentie 1
SF-02270 Espoo
☎ (0) 80 48 61
Telex 125 252, Telefax (0) 88 09 41

France

Lenze S.A.
Z.A. de Chanteloup
Rue Albert Einstein
F-93603 Aulnay s/s Bois Cedex
☎ (1) 48.79.62.00
Telefax (1) 48.69.40.99

Succ. Rhône-Alpes:
42, chemin des Pivolles
F-69150 Décines-Charpieu
☎ 72.15.40.20
Telefax 78.26.88.36

Agence de l'Est
Europarc
2, rue de la Durance
F-67100 Strasbourg
☎ 88.79.47.85
Telefax 88.40.17.25

Agence Sud-Ouest:
B.P. 67
20, rue Alsace Lorraine/Pujols
F-47300 Villeneuve sur Lot
☎ 53.40.20.97
Telefax 53.40.21.04

Great Britain/Northern Ireland

Simplatroll Ltd.
Caxton Road
GB-Bedford MK 41 OHT
☎ (02 34) 35 00 44
Telefax (02 34) 26 18 15

Greece

Georg P. Alexandris AG
K. Mavromichali Str. 12
P.O. Box 86 009
GR-185.03 Piräus
☎ (1) 4 11 18 41, Telex 212 796
Telefax (1) 4 12 70 58
Monastirou Str. 153
GR-546.27 Thessaloniki
☎ (31) 52 75 21-2, Telex 418 300
Telefax (31) 51 18 15

Hong Kong

Laden Trading Company Ltd.
Room 1134-5 Nan Fung Centre
246-298 Castle Peak Road
HK-Tsuen Wan, Kowloon
Hong Kong
☎ (0) 4 99 29 23
Telex 36 863 laden hx
Telefax (0) 4 11 40 27

Hungary

Lenze Antriebstechnik GmbH.
Szerviz és Informacios Iroda
Bognár u. 3/B II.3
H-1021 Budapest
☎ + Telefax 1760496

Iceland

see Denmark

India

Emco Dynatorq Transmissions Pvt. Ltd.
106 Industrial Area, Sion
IND-Bombay 400 022
☎ (22) 40 76 371, (22) 40 71 816,
(22) 40 76 432
Telex 011-76010 EEPL IN
011-73077 DYNA IN
Telefax: (022) 409 04 23
Cable EMCOTROLL

Indonesien

see Singapore

Israel

Greenshpon Eng., Works Ltd.
20 Haamelim St'
P.O. Box 10 108
IL-Haifa-Bay 26110
☎ (04) 72 11 87
Telex green 45 108
Telefax (04) 72 62 31

Italy

Gent Trasmissioni S.p.A.
Viale Monza 3 38
I-20128 Milano
☎ (02) 26 000 456
Telex 320 017 gent i
Telefax (02) 2 55 29 70

Japan

Miki Pulley Co. Ltd.
461 Imai-Minami-Cho, Nakahara-Ku
J-Kawasaki-City
☎ (044) 7 33 - 51 51, Telex 03 842 110
Telefax (044) 7 11 24 31, 7 33 12 41

Korea

In Kok Industrial Co. Ltd.
Room No. 101,
Soipyo Choseon Mooyack Bldg.
339-1, Dae Bang Dong
Dong Jack-Gu
C.P.O. Box 3721
R.o.K.-Seoul/Korea
☎ (02) 816-0652-5
Telex K26919 Inkokld
Telefax (02) 816-5016

Luxemburg

see Belgium

Malaysia

see Singapore

Mexico

Transmisiones y Repuestos
De Mexico, S.A. de C.V.
Norte 80-A No. 6205
MEX-Mexico 07839 D.F.
☎ 751-34-32, 760-85-01, 760-20-90
Telefax 751-34-92

Netherlands

Lenze B.V.
Postbus 31 01
NL-5203 DC's-Hertogenbosch
Ploegweg 15
NL-5232 BR's-Hertogenbosch
☎ (0 73) 41 00 96
Telefax (0 73) 41 15 45

Norway

DtC-Lenze A/S
Elveveien 26-28
N-1472 Fjellhamar
☎ (02) 97 19 50
Telefax (02) 97 20 25

Portugal

Pinhol, Gomes & Gomes Lda.
Rua Vieira da Silva 6-10
P-Lisboa 3
☎ (1) 69 01 81, Telex16 526
Telefax (1) 60 68 58

Republic South Africa

S.A. Power Services (Pty.) Ltd.
P.O. Box 11 37, ZA-Randburg 2125
☎ (011) 787-1801
Telex 4-24796 SA
Telefax (011) 787-5040

Romania

see Austria

Singapore/Asean

Asia-Mech Engineering Pte Ltd.
10, Tuas Avenue 1
SGP-Singapore 2263
☎ 86 22 511, 86 22 051
Telex asiamc 34 883
Telefax 86 10 767

Spain

Lenze Transmisiones, S.A.
Mila i Fontanals, 135 - 139
E-08205 Sabadell (Barcelona)
☎ (93) 7 12 22 63
Telefax (93) 7 12 25 41

Sweden

Lenze Transmi[illegible]
Box 10 74
S-58110 Linköping
☎ (013) 11 14 70
Telex 50 033, Telefax (013) 10 36 23

Switzerland

Lenze Bachofen AG
Ackerstraße 42, Postfach
CH-8610 Uster-Zürich
☎ (01) 9 44 12 12
Telex 826 107, Telefax: (01) 9 44 12 33

Bureau de Suisse Romande:
Lenze Bachofen SA
Grands-Champs 4
CH-1033 Cheseaux s.L.
☎ (021) 7 31 02 12
Telefax (021) 7 31 07 17

Taiwan

Ace Pillar Trading Co. Ltd.
No. 2, Lane 19, Sec. 1, Kuanfu Road
San-Chung-City, R.O.C-Taipei/Taiwan
☎(02) 995-4232; 995-2801
Telefax (02) 995-4233

Thailand

Weinmann & Schneider Co., Ltd.
G.P.O. Box 845
T-Bangkok 10501
☎ (2) 3 94 33 22
Telex 87 973 alucon th
Telefax (2) 3 84 04 47

Turkey

TOBA
Redüktor Makina
Sanayi Ithalat-Ihracat
Ticaret A.S.
Metal Isleri Sanayi
Sitesi 4 Sokak No. 106
TR-Kisikköy-Izmir/Turkey
☎ (951) 73 52 36
Telefax (951) 73 52 36

USA

Lenze Power Transmission
175 Route 46 West
USA-Fairfield NJ 07004
☎ (2 01) 2 27 - 53 11
Telefax (2 01) 2 27 - 74 23

Venezuela

Ackermatic Servitecnica C.A.
Calle 9
EDF.Cimaf Nivel Sótano
La Urbina
YV-Caracas
☎ (02) 241 6803
Telefax (02)241 0849

Yugoslavia

see Austria

Bulletin No. PCP-009

12000, 13000, 14000 XV Series

ELECTRONIC METERING PUMPS

Installation Operation Maintenance Instruction

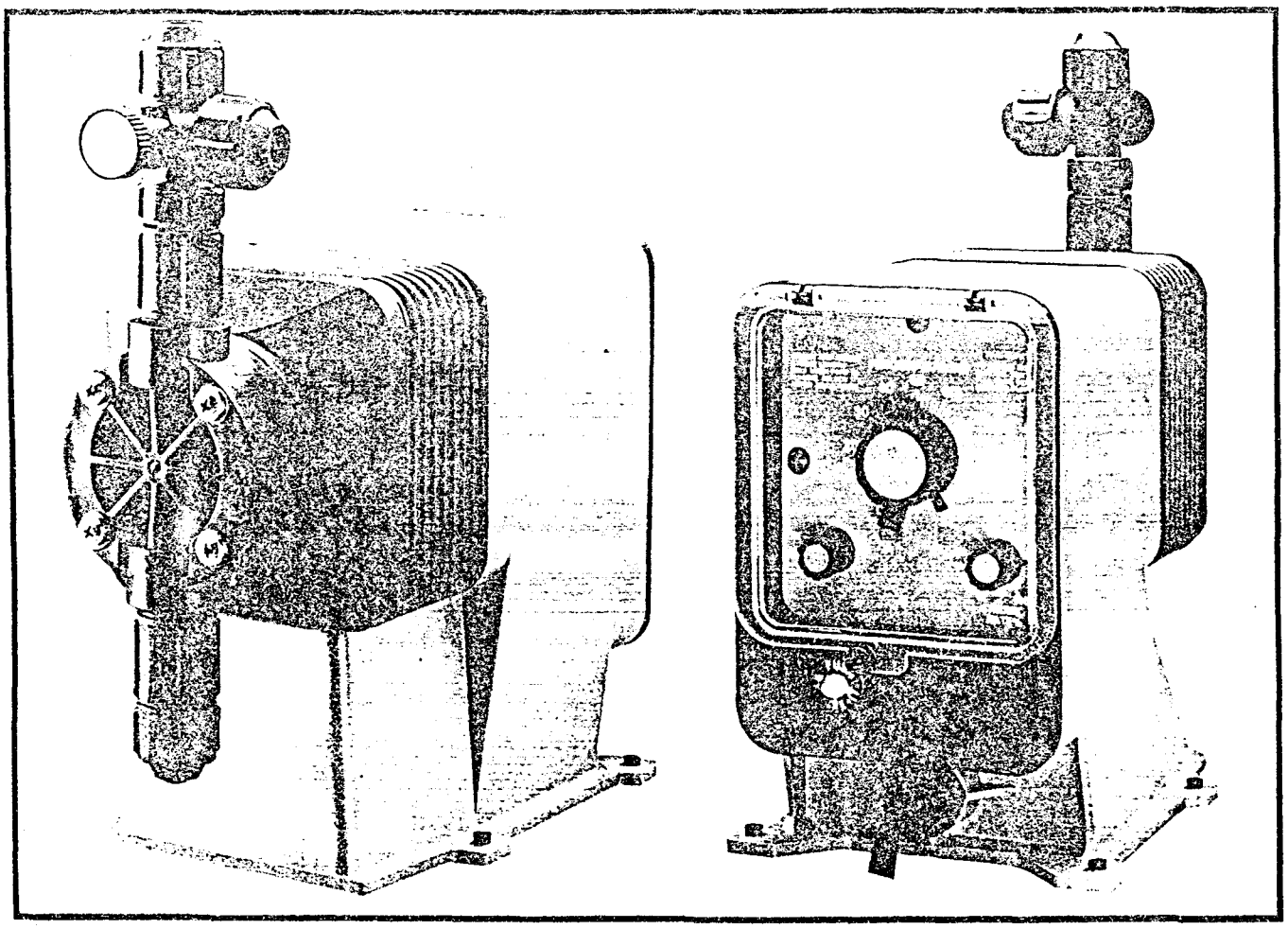

READ ALL WARNINGS CAREFULLY
BEFORE INSTALLING

TABLE OF CONTENTS

	Page
SAFETY INSTRUCTIONS	2
INTRODUCTION	3
UNPACKING THE PUMP	5
PRECAUTIONS FOR OPERATION	5
INSTALLATION, PIPING AND WIRING	7
START-UP AND OPERATION	11
MAINTENANCE	15
TROUBLESHOOTING	18
EXPLODED VIEW DRAWINGS	20
REPAIR SERVICE	23

SAFETY INSTRUCTIONS ⚠ WARNING

When using chemical feed pumps, basic safety precautions should always be followed to reduce risk of fire, electric shock, and personal injury. Failure to follow these instructions could result in death or serious injury.

READ ALL INSTRUCTIONS

GENERAL SAFETY CONSIDERATIONS

- Always wear protective clothing including gloves and safety glasses when working on or near chemical metering pumps.
- Inspect tubing regularly when replenishing chemical solution for cracking or deterioration and replace as necessary. **(Always wear protective clothing and safety glasses when inspecting tubing.)**
- When pump is exposed to direct sunlight, use U.V. resistant tubing.
- Follow directions and warnings provided with the chemicals from the chemical manufacturer. User is responsible for determining chemical compatibility with chemical feed pump.
- Secure chemicals and metering pumps, making them inaccessible to children and pets.
- Make sure the voltage on the chemical metering pump matches the voltage at the installation.
- Do not cut plug off electrical cord or the ground lug - consult a licensed electrician for proper installation.
- Pump is **NOT** to be used to handle flammable liquids.

SAFETY OPERATING PROCEDURES

- All pumps are tested with water before shipment. Remove tubing and dry thoroughly if you are pumping chemical that will react with water (i.e. sulfuric acid).
- Finger tighten plastic connections. **DO NOT USE WRENCH.**
- Before repair or moving pump, disconnect power cord or turn off power to pump. De-pressurize system and drain chemical. **(Always wear protective clothing and safety glasses when working on metering pump.)**
- Always consult licensed plumber and electrician before installation and make sure to conform to local codes.
- Consult with local health officials and qualified water conditioning specialist when treating potable water.
- Be sure to de-pressurize system prior to hook-up or disconnection of metering pump.
- If point of injection is lower than chemical tank and pump, install an anti-siphon valve.
- **DO NOT MODIFY** pump as this poses a potentially dangerous situation and voids the warranty.
- For accurate volume output, pump must be **calibrated** under **all** operating conditions.

INTRODUCTION

These installation, operation and maintenance instructions cover your electronic metering pump. Refer to the pump nameplate to determine the actual model.

PRINCIPLE OF OPERATION

Diaphragm metering pumps are used to dispense chemicals or fluids. This is achieved by an electromagnetic drive mechanism (solenoid) which is connected to a diaphragm. When the solenoid is pulsed by the control circuit, it displaces the diaphragm which, through the use of check valves, moves the fluid out the discharge under pressure. When the solenoid is deenergized it returns the diaphragm and pulls more fluid into the pumphead and the cycle repeats.

The pump stroke rate is controlled by the internal circuit and is changed by turning the rate knob. The mechanical stroke length of the pump is controlled by the stroke length knob.

MATERIALS OF CONSTRUCTION

The wetted materials (those parts that contact the solution being pumped) available for construction are polypropylene, PVC, SAN, Hypalon, Viton, Teflon, 316 Stainless Steel, PVDF, Ceramic and Alloy C. These materials are very resistant to most chemicals. However, there are some chemicals, such as strong acids or organic solvents, which cause deterioration of some elastomer and plastic parts, such as diaphragm, valve seat, or head. Consult Chemical Resistance Guide or Supplier for information on chemical compatibility.

Various manufacturers of plastics, elastomers and pumping equipment publish guidelines that aid in the selection of wetted materials for pumping commercially available chemicals and chemical compounds. Two factors must always be considered when using an elastomer or plastic part to pump chemicals. They are:

1. The temperature of service: Higher temperatures increase the effect of chemicals on wetted materials. The increase varies with the material and the chemical being used. A material quite stable at room temperature might be affected at higher temperatures.

2. Material choice: Materials with similar properties may differ greatly from one another in performance when exposed to certain chemicals.

MANUFACTURER'S PRODUCT WARRANTY

The manufacturer warrants its equipment of its manufacture to be free of defects in material or workmanship. Liability under this policy extends for eighteen (18) months from the date of purchase or one (1) year from date of installation or whichever comes first. The manufacturer's liability is limited to repair or replacement of any device or part which is returned, prepaid, to the factory and which is proven defective upon examination. This warranty does not include installation or repair cost and in no event shall the manufacturer's liability exceed its selling price of such part.

The manufacturer disclaims all liability for damage to its products through improper installation, maintenance, use or attempts to operate such products beyond their functional capacity, intentionally or otherwise, or any unauthorized repair. Replaceable elastomeric parts are expendable and are not covered by any warranty either expressed or implied. The manufacturer is not responsible for consequential or other damages, injuries or expense incurred through use of its products.

The above warranty is in lieu of any other warranty, either expressed or implied. The manufacturer makes no warranty of fitness or merchantability. No agent of ours is authorized to make any warranty other than the above.

Pumps carrying the NSF seal are listed for swimming pools, spas, and hot tubs, and when proper materials are selected, are capable of handling but not limited to the following chemical solutions:

12½%	sodium hypochlorite	12%	aluminum sulphate
2%	calcium hypochlorite	10%	hydrochloric acid
20%	dichloro-s-triazinone	10%	sodium hydroxide
5%	trichloro-s-triazinone	5%	sodium carbonate

UNPACKING THE PUMP

Check all equipment for completeness against the order and for any evidence of shipping damage. Shortages or damages should be reported immediately to the carrier and to the seller of the equipment.

The carton should contain: (See Figure A)

- Metering Pump
- Clear Flexible Suction Tubing
- Stiff White Discharge Tubing
- Footvalve/Strainer Assy.
- Anti-siphon/backpressure Injection Valve Assy.
- One Instruction Book that you are now reading
- Bleed Valve Assembly (most models)
- Tube Wand Assembly (most models)

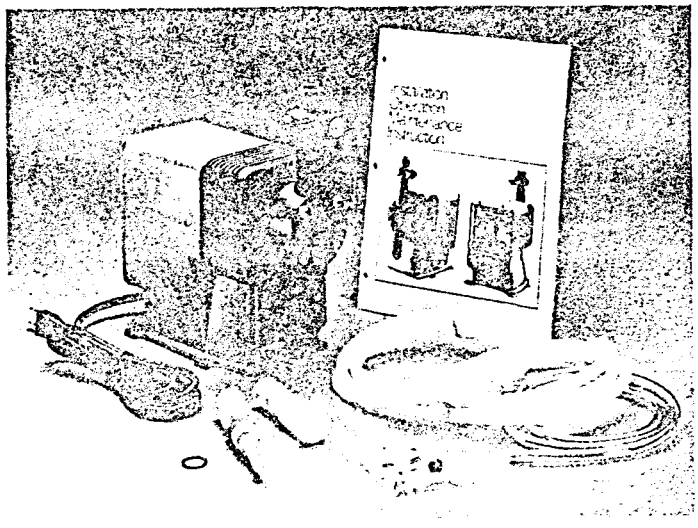

Figure A

Make sure that all items have been removed from the shipping carton before it is discarded.

PRECAUTIONS FOR OPERATION

Each Electronic Metering Pump has been tested to meet prescribed specifications and safety standards. Proper care in handling, installation and operation will help in ensuring a trouble free installation.

Please read all these cautionary notes prior to installation and start-up of your metering pump.

1. **Important: Pump must be installed and used with supplied back pressure/injection valve supply. Failure to do so could result in excessive pump output flow.**

2. Handle the pump with care. Dropping or heavy impact causes not only external damage to the pump, but also to electrical parts inside.

3. Install the pump in a place where the ambient temperature does not exceed 40°C (104°F). The pump is water resistant and dust proof by construction and can be used outdoors, however **do not operate the pump submerged.** To avoid high internal pump temperatures, do not operate in direct sunlight.

4. Install the pump in a place convenient for its future maintenance and inspection, then fix it to prevent vibration.

5. Protective caps must be removed prior to installing tubing onto valve assemblies. Use tubing of specified size. Connect the tubing to the suction side securely to prevent the entrance of outside air. Make sure that there is no liquid leakage on the discharge side.

6. Be careful to check that the voltage of the installation matches the voltage indicated on the pump nameplate. Each pump is equipped with a three prong plug. Always be sure the pump is grounded. To disconnect, do not pull wire but grip the plug with fingers and pull out. Do not use the receptacle in common with heavy electrical equipment which generates surge voltage. It can cause the failure of the electronic circuit inside the pump.

7. Tampering with electrical devices can be potentially hazardous. Always place chemicals and pump installation well out of the reach of children.

8. Never repair or move the metering pump while operating. Always disconnect electrical power. **For safety, always wear protective clothing (protective gloves and safety glasses) when working on or near chemical metering pumps.**

9. An air bleed valve is available for most models. Air purges should be performed when the pump chamber contains no fluid at the time of start-up. As a safety measure, connect the return tubing to the air bleed valve and bypass fluid back to storage tank or a suitable drain.

10. Chemicals used may be dangerous and should be used carefully and according to warnings on the label. Follow the directions given with each type of chemical. Do not assume chemicals are the same because they look alike. Always store chemicals in a safe location away from children and others. We cannot be responsible for the misuse of chemicals being fed by the pump. Always have the material safety data sheet (MSDS) available for any fluid being pumped.

11. All pumps are pretested with water before shipment. Remove head and dry thoroughly if you are pumping a material that will react with water, (i.e. sulfuric acid, polymers). Valve seats, ball checks, gaskets, and diaphragm should also be dried. Before placing pump into service, extreme care should be taken to follow this procedure.

12. Valve cartridges are stamped to indicate fluid flow direction. Always install so that markings read from top to bottom.

13. When metering hazardous material DO NOT use plastic tubing, strictly use proper rigid pipe. Consult supplier for special adapters or valve assemblies.

14. **Pump is NOT to be used to handle or meter flammable liquids or materials.**

15. Standard white discharge tubing is not recommended for installations exposed to direct sunlight. Consult supplier for special black tubing.

16. Factory will not be held responsible for improper installation of pump, or plumbing. All cautions are to be read thoroughly prior to hook-up and plumbing. For all installations a professional plumber should be consulted. Always adhere to local plumbing codes and requirements.

17. When using pump with pressurized systems, make sure the pressure of the system does not exceed the maximum pressure rating on the pump nameplate. Be sure to de-pressurize system prior to hook up or disconnecting the metering pump.

18. Electronic power modules are equipped with automatic reset thermal overload devices and may reset unexpectedly.

19. The pump is designed to operate using a backpressure/injection valve. If the discharge point is below the liquid level of the source or if the discharge pressure is less than the suction pressure, siphoning may occur. To correct this condition, install an anti-siphon valve or other anti-siphon device. Check local regulations which may apply. (Reg. Figure G1).

INSTALLATION, PIPING AND WIRING

The metering pump should be located in an area that allows convenient connections to both the chemical storage tank and the point of injection. The pump is water resistant and dust proof by construction and can be used outdoors, however **do not operate submerged.** Avoid continuous temperatures in excess of 40°C (104°F). To do otherwise could result in damage to the pump.

MOUNTING

Typical mounting arrangements are shown in Figures B to E.

Important: **Injection point must be higher than the top of the solution supply tank to prohibit gravity feeding, unless a suitable backpressure is always present at the injection point.**

1. For wall or shelf mounting, refer to Figure E. Connect suction tubing to suction valve of chemical pump. Suction valve is the lower valve. Tubing should be long enough so that the footvalve/strainer assembly hangs about 2-3 inches above the bottom of chemical tank. To keep chemical from being contaminated, the tank should have a cover.

2. Flooded suction mounting (installing the pump at the base of the chemical storage tank, Figure C) is the most trouble free type of installation and is recommended for very low output requirements. Since the suction tubing is filled with chemical, priming is accomplished quickly and the chance of losing prime is reduced.

   To mount pump, drill 4 holes of 1/4" diameter in the shelf as shown in the dimension drawing (Figure F). Attach pump securely using four #10 bolts and nuts.

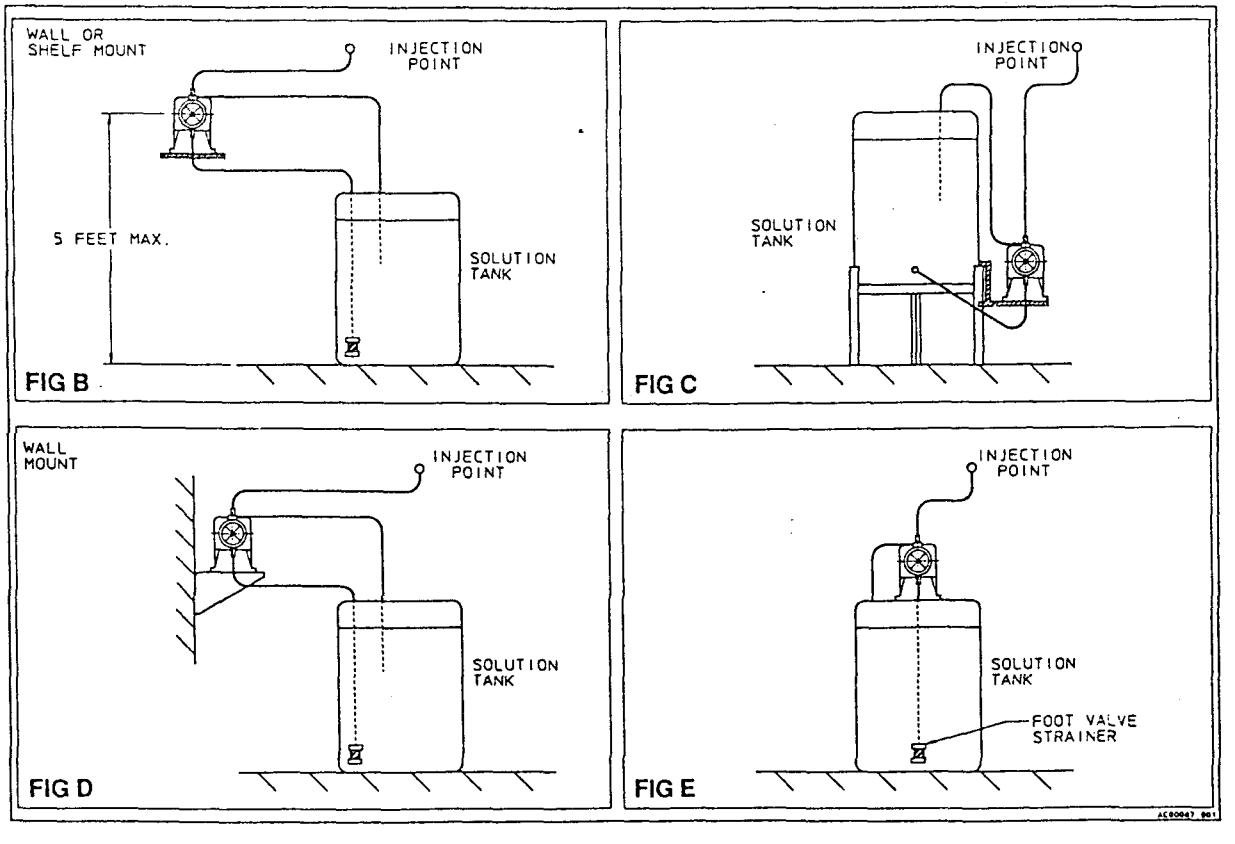

3. The pump can be mounted to a wall as shown in Figure D. A wall mount bracket kit is available which includes all necessary hardware to mount the pump to the wall. Mounting the pump other than as shown in Figure D defeats the purpose of the housing drain. Mounting dimensions for the pump are provided in Figure F for reference.

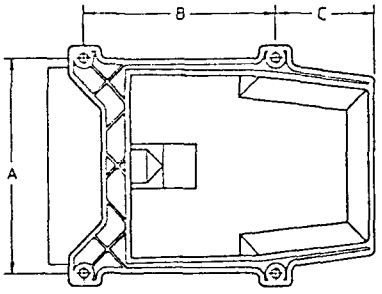

HOUSING SIZE	DIMENSIONS		
	A	B	C
12000 XV	4.81	4.38	2.19
13000 XV	4.81	4.38	2.19
14000 XV	5.56	4.38	2.19

NOTE: VPH4, VPH5 ARE SIZED SAME AS 14000 XV.

Figure F

4. The pump can be mounted on top of a solution tank as shown in Figure E. Install chemical pump on the cover. Insert suction tubing through the center hole and cut tubing so foot valve/strainer hangs about 2 c 3 inches above the bottom of the tank. Mount the chemical pump rigidly by drilling four 1/4" holes and using our #10 screws and nuts.

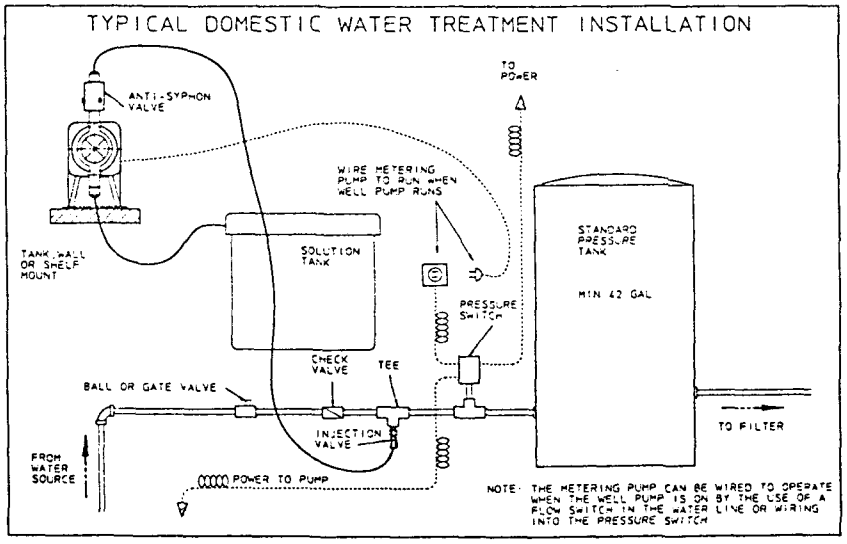

FIG G1

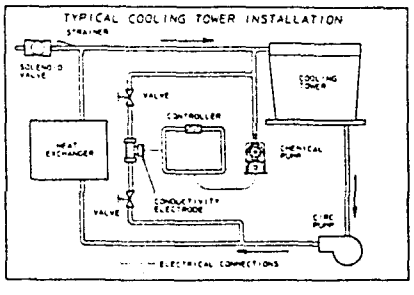

FIG G2

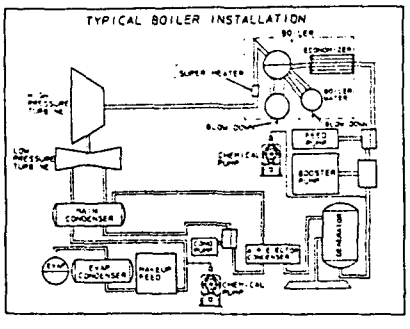

FIG G3

PIPING

1. Use provided tubing of specified size for connection. Connect tubing securely to prevent leakage of chemical and the entrance of air. Since plastic nuts are used for fittings, they should not be tightened excessively i.e. hand tighten only.

2. If the air bleed valve assembly is being used, a return line (tubing) should be securely connected and routed back to the storage tank. **To avoid possible injury from chemicals do not attempt to prime using a bleed valve without installing a return line.**

3. When pump is shelf mounted or top mounted on tank, suction tubing should kept as short as possible.

4. To maintain metering performance, a backpressure/injection valve is provided. The injection valve must be installed in the discharge line. Best practice is to install the injection valve at the point of chemical injection.

5. If the discharge tubing is going to be exposed to direct sunlight, black tubing should be used instead of the standard white translucent tubing supplied with each pump. To obtain, contact supplier.

6. To prevent clogging or check valve malfunction always install a strainer assembly to the end of the suction tubing (Figure E). This footvalve/strainer assembly should always be installed 2 to 3 inches above the bottom of the chemical tank. This will help prevent clogging the strainer with any solids that may settle on the tank bottom. The chemical tank and footvalve/strainer should be cleaned regularly, to ensure continuous troublefree operation. If the chemical being pumped regularly precipitates out of solution or does not dissolve easily or completely (e.g. calcium hydroxide), a mixer should be used in the chemical tank. These are readily available in many motor configurations and mountings. To obtain, contact supplier.

7. A flooded suction (tank liquid level always at a higher elevation than the pump) is recommended when pumping sodium hypochlorite (NaOCl) and hydrazine solution (N2H2) etc. which are liable to produce air bubbles. Maintaining a low liquid temperature will also help eliminate this problem.

8. Pipe corrosion can result if dilution at the injection point does not occur rapidly. This problem is easily prevented by observing this simple rule: install injection fitting so that the end is in the center of the flow stream of the line being treated. Trim injector tip as required. See Figure H. Note: Extended injection assemblies are available for large water lines. Consult your supplier for more information.

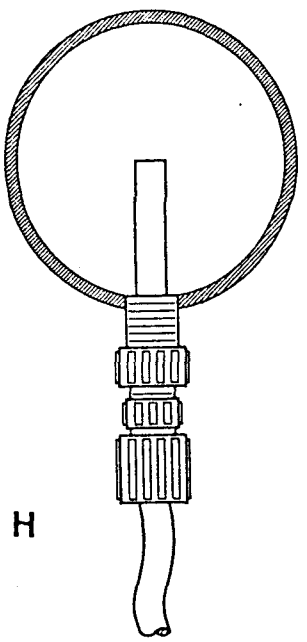

FIG H

WIRING

1. The metering pump should be wired to an electrical source which conforms to those on the pump nameplate. (Applying higher voltage than the pump is rated for will damage the internal circuit.)

2. ⚠WARNING -- **Risk of electrical shock. This pump is supplied with a three prong grounding type power plug. To reduce risk of electric shock, connect only to a properly grounded, grounding type** receptacle.

3. In the electronic circuit of the control unit, measures for surge voltage are made by means of surge absorbing elements and high voltage semiconductors. Nevertheless, excessive surge voltage may cause failure in some areas. Therefore, the receptacle should not be used in common with heavy electrical equipment which generates high voltage. If this is unavoidable, however, measures should be taken by (a) the installation of a surge absorbing element (varister of min. surge resistance 2000A) to the power supply connection of the pump, or (b) the installation of a noise suppression transformer.

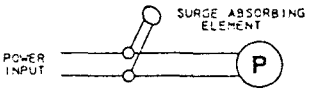

(a)

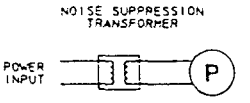

(b)

4. Signal input to the external pulse signal input terminals ([EXT],[STOP]) **must be a no-voltage signal** from relay-contacts, etc. and the input of other signals is prohibited. (in the case of relay contacts, 100 ohms or below at ON and 1M ohms or above at OFF.) The pulse duration of the input signal must be 10 milliseconds or over and the frequency of the input signal must not exceed 125 times/min. Signal cord is provided with the pump.

WELL PUMP SYSTEM INSTALLATION

1. Ensure that the metering pump voltage matches the voltage of the well pump. Typical well pump electrical circuits are shown in Figure I. All electric wiring should be installed in accordance to local electrical codes by a licensed electrician.

2. Install the backpressure/injection valve on the discharge side of the metering pump into a tee which is installed into the water line going to the pressure tank. Typical installations are found in figures GI, G2 and G3.

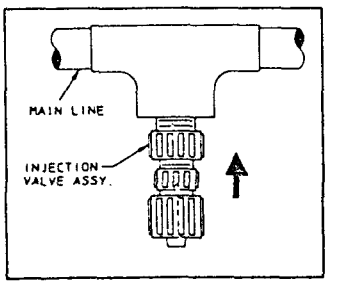

FIG J

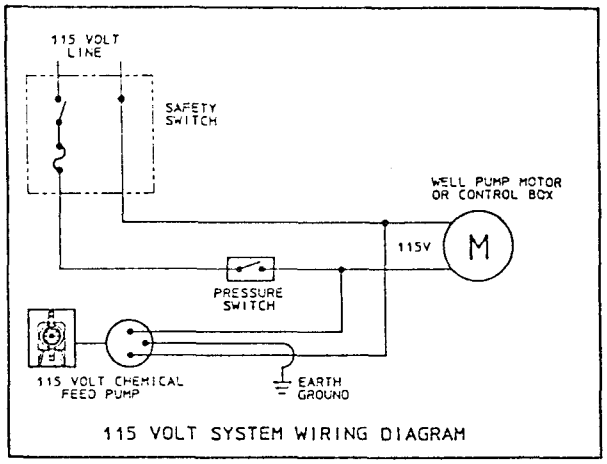

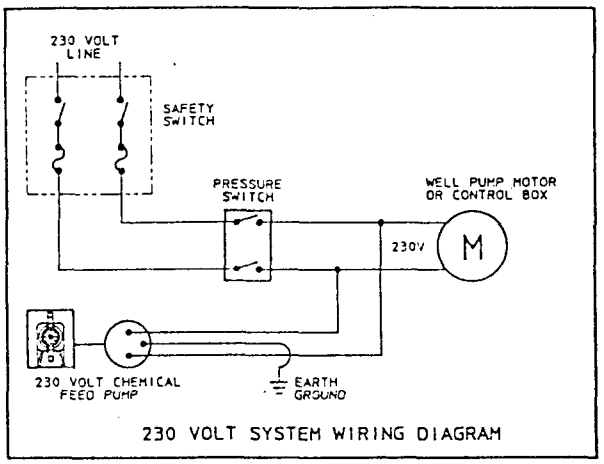

FIG 1

START UP AND OPERATION

POWER

All metering pumps are available in 115 volts at 50/60 Hertz, single phase. Optionally 230 volts at 50/60 Hertz, single phase can be provided. **Prior to start-up always check to insure that the pump voltage/frequency/ phase matches that of the power supply.**

PRIMING

⚠CAUTION: When working on or around a chemical metering pump installation, protective clothing and gloves and safety glasses should be worn at all times.

All pumps are tested with water. If the chemical to be pumped reacts when mixed with water (e.g. sulfuric acid) the pump head should be removed and dried thoroughly along with the diaphragm and valve seats.

1. Turn on the power to the pump. The green LED will light up and flash off each time the pump strokes.
2. Adjust the stroke rate knob to the 100% setting mark (for more information see "Capacity Control").
3. Adjust the stroke length knob to the 100% setting mark (for more information see "Capacity Control").
4. If the discharge line is connected directly to a pressurized system it should be temporarily bypassed during priming of the pump. A bleed valve will simplify this operation by allowing easy bypass of the discharge fluid. All air must be purged from the pumphead before the pump will pump against pressure.

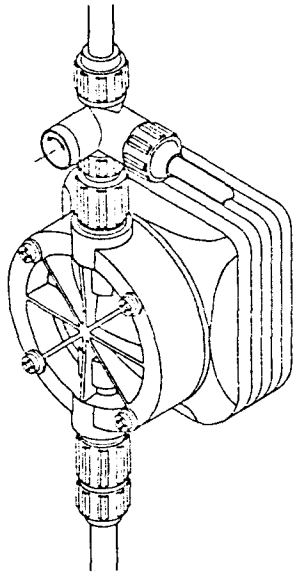

A) While pump is running, turn adjustment screw counterclockwise.

B) Run with valve open until a solid stream of fluid comes out of the bypass tubing (1/4 x 3/8 supplied with valve), no air bubbles.

C) Close air bleed valve by turning adjustment screw clockwise.

5. Chemical should reach the pumphead after a few minutes of operation. If not, remove the discharge fitting and moisten the discharge valve area (ball check and valve seats) with a few drops of chemical being fed to the metering pump. **For safety, always use protective clothing and gloves, wear safety glasses and use a proper container to hold the chemical.**

6. If the pump continues to refuse to prime, refer to Troubleshooting Section of these instructions.

7. Once the pump has been primed and is pumping the chemical through the head, turn off the power, reconnect the discharge tubing (if it had been removed) and immediately clean any spilled chemical that is on the pump housing or head.

8. Turn the power on once more and adjust the pump flow to the desired rate (see "Capacity Control").

9. Always check the calibration of the pump after start-up. It's best to calibrate the pump under your typical use conditions.

CAPACITY CONTROL

Capacity can be controlled by means of the stroke length adjusting knob or stroke frequency adjusting knob. Graphs are for illustration purposes only, use a calibration column for accurate calibration. Contact you pump supplier for proper calibration equipment.

(1) Stroke Frequency Adjustment:

- Stroke frequency can be controlled from 10 to 100% (12 to 125 spm) by means of the electronic circuit.
- Stroke frequency can be set by means of the stroke frequency adjusting knob even while the pump is in operation.

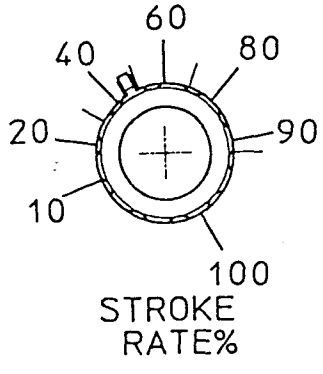

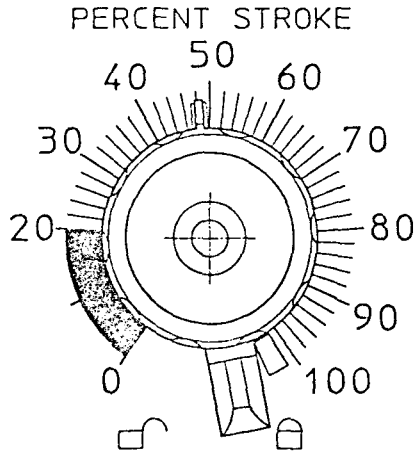

(2) Stroke Length Adjustment:

- Stroke length can be controlled within 0 to 100% of the diaphragm displacement. (It should be controlled within 10 to 100% for practical use.)
- Stroke length can be set by means of the stroke length adjusting knob while the pump is in operation. **Do not turn the knob while *the pump is stopped.***

(3) Controlling Procedure:

Proper set points for stroke length and stroke frequency should be determined after consideration of the pump and characteristics of the fluid. The following procedure is recommended from the viewpoint of pump performance. **Note: The closer the stroke length is to 100%, the better the pump performance will be.**

A) Set the stroke length to 100% then adjust the stroke frequency for coarse capacity control.
B) Measure the capacity.
C) When the measured capacity is less than the required value, increase the stroke frequency and measure the capacity again.
D) Then, adjust the stroke length for fine capacity control.
E) Finally, measure the capacity and make sure that the required value is obtained.

Example	Selected Model	=	VPD4
	Set Stroke Length	=	100%
	Set Stroke Rate	=	100%
	Output Capacity (Rated Pressure)	=	21 GPD*
	Desired Flow	=	15 GPD
	Adjust Stroke Rate to 80%		
	Output Capacity	=	0.80 x 21 = 16.8 GPD*
	Stroke Length Setting	=	$\frac{15}{16.8}$ x 100 = 90% approximate

*Thus to obtain the desired flow, stroke length is set at 90% and stroke rate is set at 80% i.e. output capacity = 0.90 x 0.80 x 21 = 15 GPD**

* Check these values by measurement. Output capacity is higher when feeding against less than rated pressure.

OPERATION BY EXTERNAL INPUT SIGNALS:

The pump can be controlled by three types of input signals. All are fully isolated from AC input power and from Earth ground. The input socket connections are located at the bottom of the control panel face and the signal cords are provided with the pump. Remove rubber plugs to access plug sockets.

STOP FUNCTION:

Operation of the pump can be stopped by an external signal input. When the external signal is input to the terminal marked [STOP] which is provided at the bottom of the control panel, the lamp 'STOP' (red) lights up and operation of the pump is stopped. The stop function overrides both manual settings and external input signals at other terminals.

⚠CAUTION: Operation of more than one pump from the same contact closure will damage the pump circuits. When such operation is required, the pump circuits must be electrically isolated from one another by means of a multicontact control relay or similar means.

- Input signals should be no-voltage signals from relay contacts, etc. and the input of other signals is prohibited. (In case of relay contacts, electric resistance must be 100 ohms or below at ON and IM ohm or above at OFF).

The stop function is commonly used in conjunction with a tank float switch. The float switch contacts are normally open but when the tank level falls past a certain point the contacts close and the pump stops.

EXTERNAL PACING FUNCTION:

The pump's stroke rate can be controlled by an external input signal. When the input signal line is connected and the EXTERNAL/OFF/MANUAL switch is in the external position and a contact signal is input to the terminal marked [EXTERNAL] the pump makes one discharge stroke.

⚠CAUTION: Operation of more than one pump from the same contact closure will damage the pump circuits. When such operation is required, the pump circuits must be electrically isolated from one another by means of a multicontact control relay or similar means.

- When the 'ON' signal pulse is input, the pump operates one stroke and the fluid is discharged. In addition, the pump can be operated continuously at a rate of O to 125 strokes/min. by repeated input of 'ON' and 'OFF' signals.

- After receiving an input signal, the pump generates the necessary power pulse to actuate the solenoid. The external signal input is debounced by the pump circuit. The pump will not stroke in response to a spurious or erratic input signal that follows at a rate greater than 125 spm. If the external signal rate exceeds 125 spm, the pump will stroke at half the external signal rate to prevent overdosing and to protect the pump from overheating.

- Input signals should be no-voltage signals from relay contacts, etc. and the input of other signals is prohibited. (In the case of relay contacts, electric resistance must be 100 ohms or below at ON and IM ohms or above at OFF).

- Cycle rate of the input signal should not exceed 125 times/min.

- Typical wiring is shown at right for use with switch closure flowmeters.

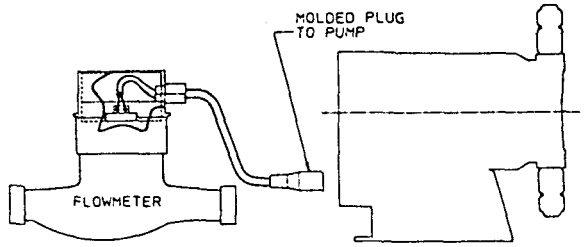

4-20 mA DC INPUT FUNCTION:

The pump's stroke rate can also be controlled by a 4-20 mA DC signal applied to the terminal marked [4-20 mA].

- For the 4-20 input to have any effect on the pump output rate, the AUTO/OFF/MANUAL switch must be in the AUTO position.

- The 4-20 mA input signal affects the pump's output as per the graph below:
  NOTE: Inverse acting control signal capability must be requested, standard control signal is direct acting.

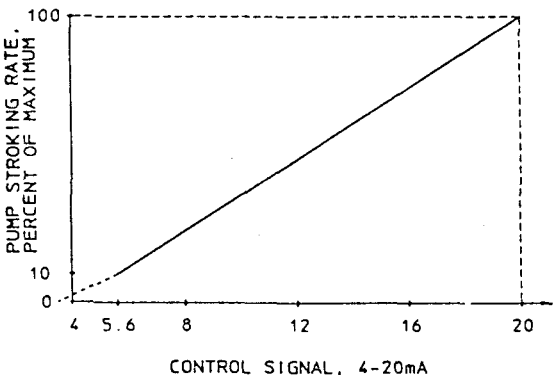

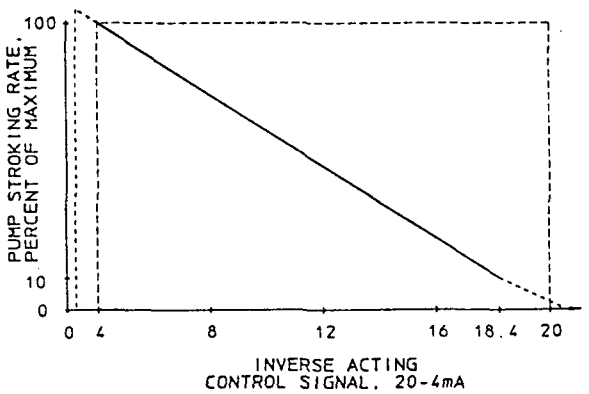

- The signal cord polarity is:
  Black = Common
  White = Positive
  Wrong polarity can result in excess flow.

- Signal input impedance is 124 ohms.

- Remove cap from pump socket labeled 4-20mA, use polarized cord supply with pump to connect control circuit to pump. Plug cord into pump socket labeled 4-20mA.

MAINTENANCE

⚠CAUTION: Before performing any maintenance or repairs on chemical metering pumps, be sure to disconnect all electrical connections and insure that all pressure valves are shut off and pressure in the pump and lines has been bled off.

Always wear protective clothing, gloves and safety glasses when performing any maintenance or repairs on chemical metering pumps.

ROUTINE MAINTENANCE

1. Routinely check the physical operating condition of the pump. Look for the presence of any abnormal noise, excessive vibration, low flow and pressure output or high temperatures [when running constantly at maximum stroke rate, the pump housing temperature can be up to 160°F (70°C)]

2. For optimum performance, cartridge valves should be changed every 4-6 months. Depending on the application, more frequent changes may be required. Actual operating experience is the best guide in this

situation. Repeated short-term deterioration of valve seats and balls usually indicates a need to review the suitability of wetted materials selected for the application. Contact the supplier for guidance.

3. Check for leaks around fittings or as a result of deteriorating tubing e.g. when standard white translucent discharge tubing is exposed to direct sunlight. Take appropriate action to correct leak by tightening fittings or replacing components.

4. Keep the pump free of dirt/debris as this provides insulation and can lead to excessive pump temperatures.

5. If the pump has been out of service for a month or longer, clean the pump head/valve assemblies by pumping fresh water for approximately 30 minutes. If the pump does not operate normally after this "purging run", replace cartridge valve assemblies.

DISASSEMBLY AND ASSEMBLY
DIAPHRAGM REMOVAL

1. Flush pumphead and valve assemblies out by running pump on water or other suitable neutralizing solution. Wash outside of pump down if chemical has dripped on pump.

2. Set stroke length of pump to 0% and unplug pump.

3. Disconnect tubing or piping from the pump. Remove the four pumphead screws and then remove the pumphead assembly.

4. Remove the diaphragm by grasping it at the outer edges and turning it counterclockwise until it unscrews from the electronic power module (EPM). Don't lose the deflection plate or diaphragm shims which are behind the diaphragm. Note shim quantity can be from O to 3.

5. Inspect diaphragm if it is intended to be used again. Look for indications of the Teflon face being overstretched, (localized white areas) or the elastomer on the back of the diaphragm being worn. Excessive amounts of either condition require diaphragm replacement.

DIAPHRAGM REPLACEMENT

Refer to drawings in the back of the manual.

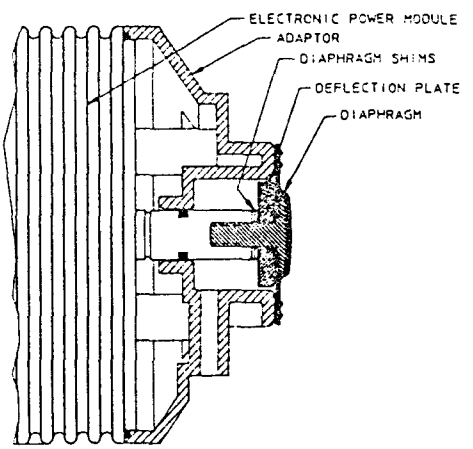

1. When replacing the diaphragm, it's always a good idea to replace the valve cartridges and other worn parts. A kit is available from your supplier with all parts necessary to completely rebuild your pump's wet end. All your supplier needs to know is the "KOPkit No." on your pump's nameplate to supply this kit.

2. Set pump stroke length to 0% and unplug the pump .

3. If you kept the shims from the original diaphragm or know the original quantity you can avoid Step #4 for shimming the diaphragm and go to Step #5.

4. Slide the diaphragm deflection plate onto the back of the diaphragm stud, radius side towards the diaphragm. Next slide three shims onto the diaphragm threaded stud and screw the diaphragm into the EPM unit. Refer to sketch. Turn diaphragm clockwise until deflection plate and shims are screwed down tight against the solenoid shaft, and the diaphragm stops turning. If there is a gap between the adaptor and diaphragm, repeat the procedure removing one shim each time until the diaphragm just touches the adaptor or is slightly recessed.

5. Apply grease to areas of the diaphragm that contact the deflection plate or radius on the adaptor.

6. Screw the diaphragm into the EPM unit's shaft with the deflection plate and appropriate number of shims in between.

7. Adjust stroke length to 50%. It is easier to do this if you temporarily turn the pump on. Place the pumphead onto the adaptor with valve flow arrows pointing up and install and tighten pumphead screws. Tighten screws until pumphead pulls up against adaptor.

8. Adjust stroke length back to 100% for easier priming and place pump back into service.

VALVE REPLACEMENT

1. Flush pump to clean any chemical from pumphead.

2. Unplug pump and disconnect any tubing or piping.

3. Unscrew valve cartridges and discard. Also remove O-Rings down inside pumphead.

4. Using new O-Rings, install new valve cartridges with stamped letters reading from top to bottom. Hand tighten only, do not use wrenches or pliers. This is especially important when the pumphead is SAN material.

5. Reconnect tubing or piping and reinstall the pump.

TROUBLESHOOTING

PROBLEM	PROBABLE CAUSE	REMEDY
LOSS OF CHEMICAL RESIDUAL	1. Pump setting too low	1. Adjust to higher setting (pump must be operating during the stroke length adjustment).
	2. Scale at injection point	2. Clean injection parts with 8% muriatic acid or undiluted vinegar. Also, see Maintenance Section).
	3. Solution container allowed to run dry	3. Refill the tank with solution and prime. (See Start-Up and Operation Section).
TOO MUCH CHEMICAL	1. Pump setting too high	1. Lower pump setting (pump must be operating to adjust stroke length knob).
	2. Chemical in solution tank too rich	2. Dilute chemical solution. NOTE: For chemical that reacts with water, it may be necessary to purchase a more dilute grade of chemical direct from chemical supplier.
	3. Siphoning of chemical into well or main line	3. Test for suction or vacuum at the injection point. If suction exists, install an anti-siphon valve.
LEAKAGE AT TUBING	1. Worn tube ends	1. Cut off end of tubing (about 1") and then replace as before.
	2. Chemical attack	2. Consult your seller for alternate material.
FAILURE TO PUMP	1. Leak in suction side of pump	1. Examine suction tubing. If worn at the end, cut approximately an inch off and replace.
	2. Valve seats not sealing	2. Clean valve seats if dirty or replace with alternate material if deterioration is noted.
	3. Low setting on pump	3. When pumping against pressure, the dials should be set above 20% capacity for a reliable feed rate.
	4. Low solution level	4. Solution must be above foot valve.
	5. Diaphragm ruptured	5. Replace diaphragm as shown in the "Maintenance Section." Check for pressure above rated maximum at the injection point. NOTE: Chemical incompatibility with diaphragm material can cause diaphragm rupture and leakage around the pump head.
	6. Pumphead cracked or broken	6. Replace pump head as shown in "Maintenance Section." Make sure fittings are hand tight only. Using pliers and wrench can crack pump head. Also, chemical incompatibility can cause cracking and subsequent leakage.
	7. Pumphead contains air or chlorine gas	7. Bleed pump head, see "Air Bleed Operation."
	8. Breakdown or disconnection of wiring	8. Connect wiring properly. Check fuse or circuit breaker.
	9. Voltage drop	9. Take measures after investigation of cause.
	10. Malfunction of electronic control board	10. Contact supplier.

PROBLEM	PROBABLE CAUSE	REMEDY
PUMP LOSES PRIME	1. Dirty check valve	1. Remove and replace or clean off any scale or sediment.
	2. Ball checks not seating or not sealing properly	2. Check seat and ball checks for chips, clean gently. If deformity or deterioration is noted, replace part with proper material. Resulting crystals can hold check valves open, therefore the valves must be disassembled and cleaned. Be sure to replace all parts as shown in the Parts Diagram (at the end of the manual).
	3. Solution container allowed to run dry	3. Refill the tank with solution and prime. (See Start-Up and Operation Section).
FITTING	1. Loose fittings	1. Lower pump setting (pump must be operating to adjust stroke length knob).
	2. Broken or twisted gasket	2. Check gaskets and replace if broken or damaged.
	3. Chemical attack	3. Consult your pump supplier for alternate material.
LEAKAGE AT TUBING	1. Worn tube ends	1. Cut off end of tubing (about 1") and then replace as before.
	2. Chemical attack	2. Consult your seller for alternate material.
FAILURE	1. Too much pressure at discharge	1. Turn off all pressure valves, loosen outlet tubing connection at discharge point. Remove discharge valve cartridge. Dampen ball check and valve sets with a few drops of solution. Set pump dials to maximum rate. When pump is primed, reconnect all tubing connections.
	2. Check valves not sealing	2. Disassemble, loosen, clean and check for deterioration swelling. Reassemble and wet the valve assembly, then prime. See Start-Up and Operating Section.
	3. Output dials not set at maximum	3. Always prime pump with output dials set at maximum rated capacity.
	4. Suction lift height too much	4. Decrease suction lift or pull vacuum on pump discharge until pump is primed.
	5. Pump equipped with spring loaded high viscosity valves	5. Loosen discharge valve to aid in priming, take necessary safety precautions. Or apply vacuum to pump discharge.

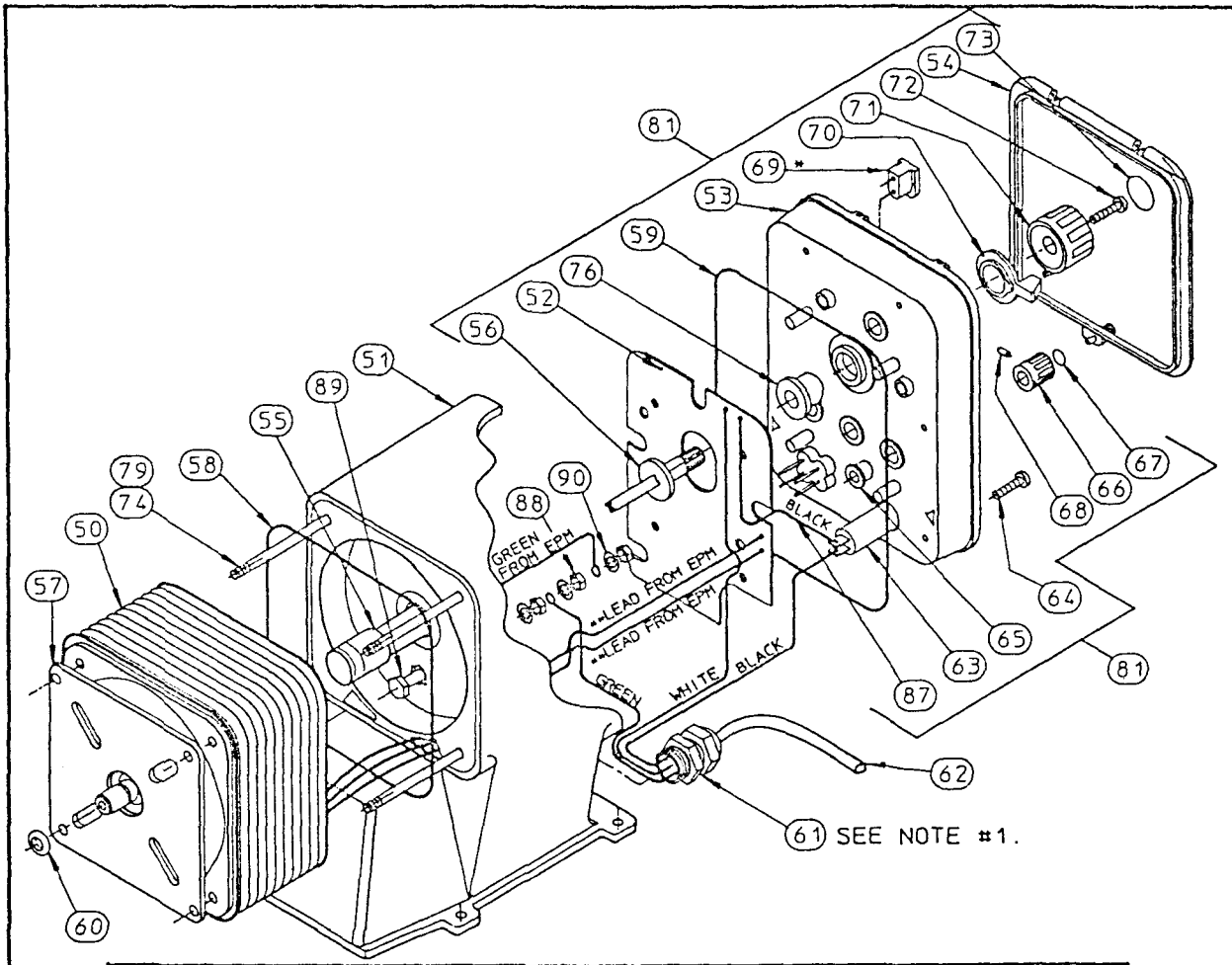

ITEM	DESCRIPTION	QTY	ITEM	DESCRIPTION	QTY
50	ELECTRONIC POWER MODULE EPM	1	68	KNOB SET SCREW	2
51	HOUSING	1	*69	PIN PLUG	2
52	ELECTRONIC CONTROL BOARD	1	70	LOCKING TAB	1
53	CONTROL PANEL	1	71	KNOB,STROKE LENGTH	1
54	DUST COVER ASSEMBLY	1	72	KNOB MOUNTING SCREW	1
55	FEMALE ADJUSTMENT SHAFT	1	73	KNOB STICKER,STROKE LG.	1
56	MALE ADJUSTMENT SHAFT	1	74	EPM MOUNTING SCREW	4
57	EPM RETAINING PLATE	1	76	GROMMET,STROKE LENGTH	1
58	EPM/HOUSING O-RING	1	77	PANEL LABEL(NOT SHOWN)	1
59	CONTROL PANEL O-RING	1	79	EPM MOUNTING WASHER	4
60	SECONDARY SEAL	1	81	CONTROL PANEL ASSEMBLY	1
61	STRAIN RELIEF	1	*84	STOP/FCTN LABEL(NOT SHOWN)	1
62	POWER CORD	1	*85	STOP/FCTN CORDS(NOT SHOWN)	2
63	CIRCUIT BREAKER	1	87	JUMPER WIRE	1
64	CONTROL PANEL SCREW	5-6	88	GROUND LUG NUT	3
65	GROMMET,STROKE RATE/SWITCH	2	89	GROUND LUG BOLT	1
66	KNOB,STROKE RATE/SWITCH	2	90	GROUND LUG WASHER	3
67	KNOB STICKER,RATE/SWITCH	2	92	BREAKER COVER(NOT SHOWN	1

* - THESE ITEMS USED ON EXTERNAL PACING, STOP & 4-20ma/STOP OPTIONS.

NOTES:

1. TERMINAL LOCATIONS ON THE CIRCUIT BOARD VARY DEPENDING ON THE CONTROL OPTION.
2. LATER PUMP VERSIONS ARE SUPPLIED WITH AN INTREGAL STRIAN REFIEF/CORD ASSEMBLY.
3. ** - 115 VOLT EPM UNITS HAVE GREY LEADS.
   ** - 230 VOLT EPM UNITS HAVE RED LEADS.

REF	REVISION	DATE

ALL DIMENSIONS ARE IN INCHES

DWG. TITLE

DRIVE ASSEMBLY

DWN BY: PTP	CAD DWG.#
DATE: 1-23-90	AC00013.001

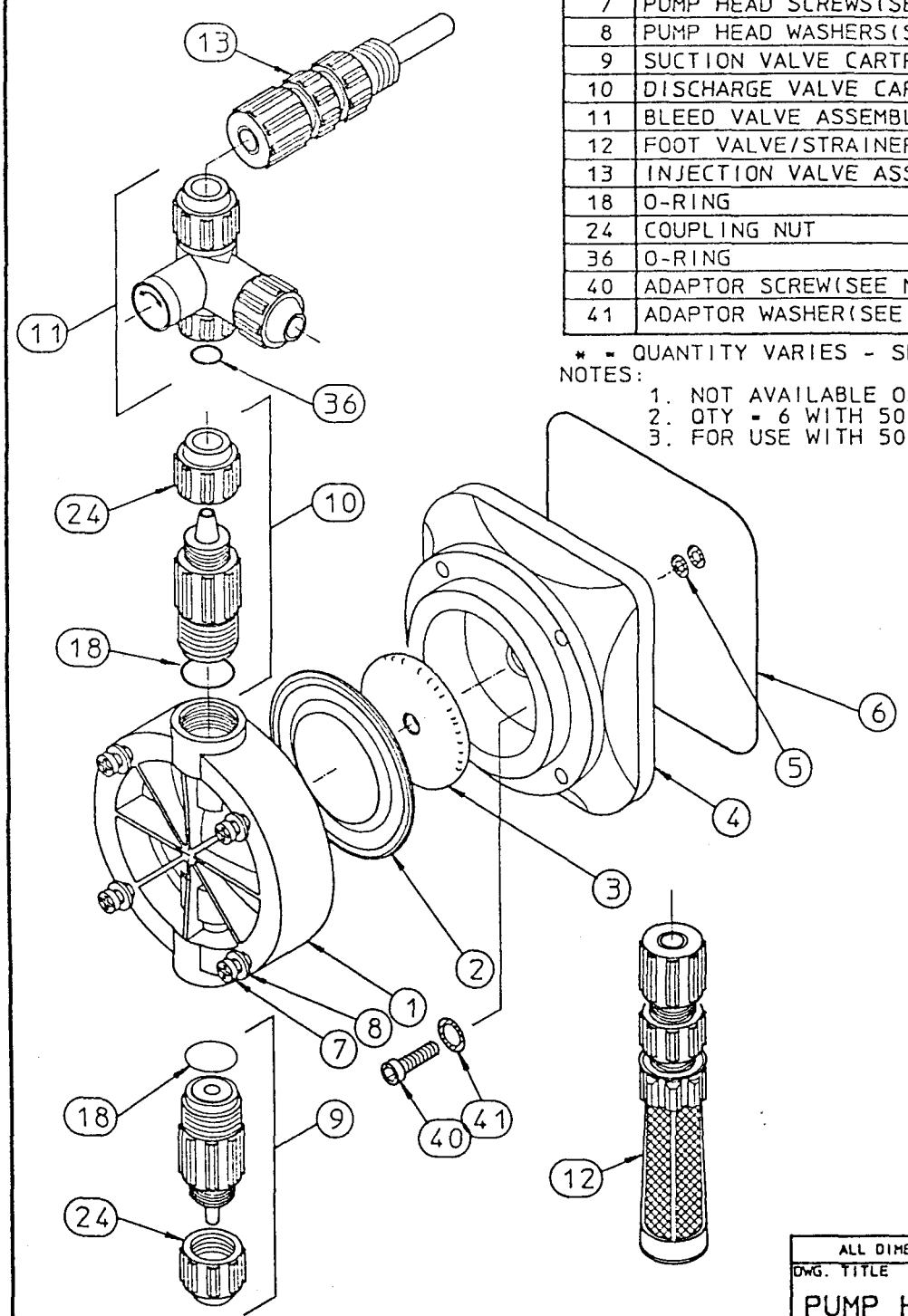

ITEM	DESCRIPTION	QTY
1	PUMP HEAD	1
2	DIAPHRAGM	1
3	DEFLECTION PLATE(SEE NOTE #1)	1
4	ADAPTOR	1
* 5	DIAPHRAGM SHIMS	0-2
6	O-RING	1
7	PUMP HEAD SCREWS(SEE NOTE #2)	4
8	PUMP HEAD WASHERS(SEE NOTE #2)	4
9	SUCTION VALVE CARTRIDGE ASSY	1
10	DISCHARGE VALVE CARTRIDGE ASSY	1
11	BLEED VALVE ASSEMBLY	1
12	FOOT VALVE/STRAINER ASSEMBLY	1
13	INJECTION VALVE ASSEMBLY	1
18	O-RING	2
24	COUPLING NUT	2
36	O-RING	1
40	ADAPTOR SCREW(SEE NOTE #3)	4
41	ADAPTOR WASHER(SEE NOTE #3)	4

* = QUANTITY VARIES - SHIM AS REQUIRED

NOTES:
1. NOT AVAILABLE ON 500 GPD MODEL.
2. QTY = 6 WITH 500 GPD MODEL ONLY.
3. FOR USE WITH 500 GPD MODEL ONLY.

REF	REVISION	DATE

ALL DIMENSIONS ARE IN INCHES

DWG. TITLE: PUMP HEAD ASSEMBLY

DWN BY: MJP | CAD DWG.#

DATE: 1-17-90 | AC00054.001

REPAIR SERVICE

Normally following the instructions in the previous sections of the manual will rectify any pump problems. If, however, after following these instructions the pump does not perform properly, it can be returned for repair. Please follow the instructions below:

1. Pump cannot be serviced properly if the original pump nameplate or data contained on the nameplate is not intact.

2. Thoroughly flush pumphead and outside of pump with water or a suitable fluid to neutralize any residual chemical left in pump.

3. Include written explanation of the following:

   A) Problem _____

   B) Pumped Fluid _____

      Name _____

      Viscosity _____

      Fluid Temperature _____

   C) Pressure @ Discharge _____

      @ Suction _____

      or Suction Lift _____

   D) Environmental Temperature _____

   E) Electrical Service _____

      Volts _____

      Hz _____

      Phase _____

   F) Nameplate Data _____

      Series _____

      Serial # _____

      KOPkit # _____

4. Package the pump in the original box if available and send to the address specified by your pump supplier.

KOPkits™

Keep-On-Pumping kits that can save you time and money!

The manufacturer has built a reputation for superior reliability by supplying carefully-designed, high-quality equipment. Even the best equipment, however, requires a minimal amount of maintenance. KOPkits are designed to guard against unnecessary downtime and assure you the highest level of efficient and uninterrupted service.

KOPkits contain those recommended spare parts which will most likely require normal maintenance.

A typical KOPkit includes Valve Cartridges with O-Rings, Head, Diaphragm, Secondary O-Ring Seal, Head Screws, Washers and an exploded view drawing.

KOPkits will save you money. When you need a part, you've got it! You can cut downtime and production loss from days to minutes. You also save by buying parts in KOPkit form compared with buying individual parts.

Each KOPkit part is vacuum-sealed to keep it clean even when stored for long periods of time.

A KOPkit is a troubleshooter's best friend. In the event of a breakdown, it will put you back in business fast! Preventive maintenance will insure continuous high performance of your pump.

Keep on pumping! Get all the money-saving and security benefits of KOPkits immediately.

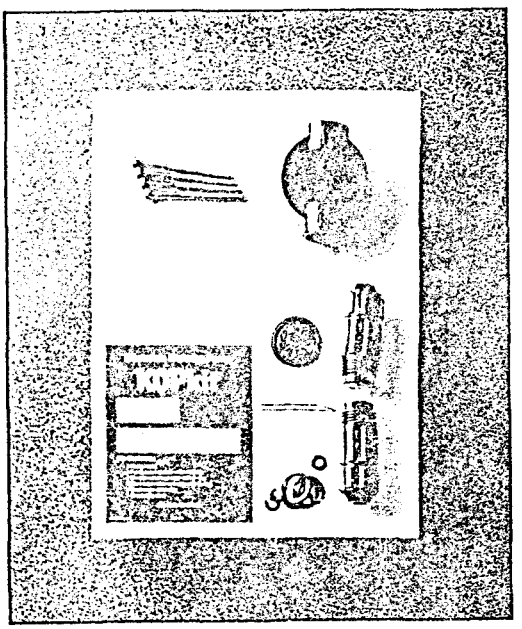

Typical KOPkit

Selecting a KOPkit

The KOPkit part number is displayed by a "K" on the pump model label as shown. The KOPkit number is the pump model number-prefixed.

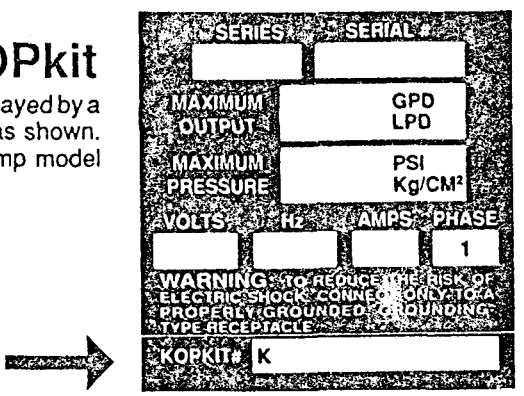

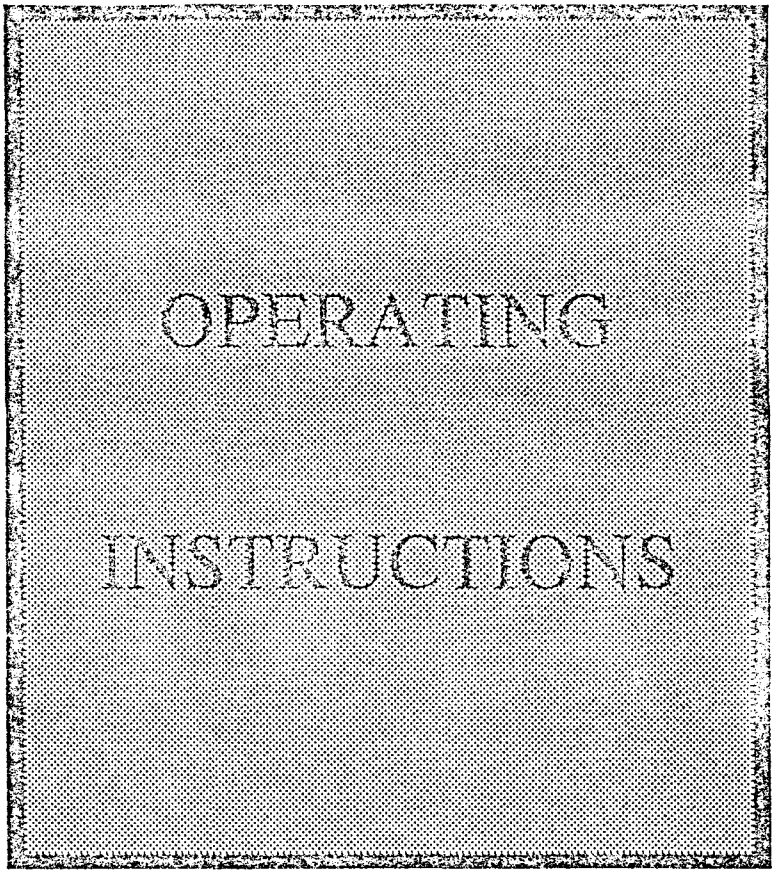

LIGHTNIN & HEI

XD AND XJ SERIES PORTABLE MIXERS

OPERATING INSTRUCTIONS

LIGHTNIN
HEI
MIXERS

A LIGHTNIN and HEI Mixer is a precision machine of the highest quality. They are designed to operate satisfactorily under all the conditions normally encountered.

This is a completely proven design - a product of LIGHTNIN and HEI Research and Development.

Among its features are:

MAXIMUM MIXING EFFICIENCY
ENERGY EFFICIENT DURA-MIX™ MOTORS
CONVENIENCE OF HANDLING
UNIQUE POSITIVE DRIVE CHUCK
POSITIVE CLAMPING AND POSITIONING
HIGH TECHNOLOGY IMPELLERS
MAINTENANCE FREE OPERATION
MODERN DESIGN STYLING

With proper care LIGHTNIN and HEI Mixers will give years of trouble-free service. If you should have any questions regarding its operation which are not answered in this manual, call your authorized LIGHTNIN and HEI Sales Engineer.

Table of Contents

TITLE	PAGE
Caution Note Safety Check List	3
Initial Inspection, Shipping Arrangements, and Storage	4
Mounting	4
Motor Connections	4
Mixer Shaft Installation	5
Positioning	5
Mixer Operations	6
Lubrication	7
Assembly & Disassembly, Direct Drive Models (XD Series)	8
Assembly & Disassembly, Gear Drive Models (XJ Series)	10
Wiring Diagram Single Phase Motor	12
Wiring Diagram Three Phase Motor	13
Mixer Dimension Drawing	14
Mixer Bracket Dimension Drawing	15
XD Assembly Drawing (Direct Drive Model)	16
XJ Assembly Drawing (Gear Drive Model)	18
Guarantee	20

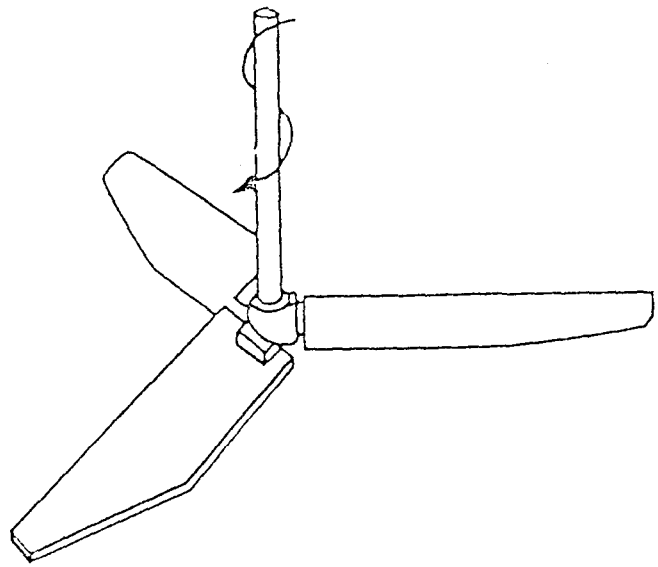

OPEN AND LOCK THE MASTER POWER SWITCH BEFORE WORKING ON OR NEAR THE MACHINE SAFETY CHECK LIST

IMPORTANT

ALL LIGHTNIN AND HEI MIXERS AND AERATORS ARE PROVIDED WITH PROPERLY DESIGNED LIFTING DEVICES AND SAFETY COVERS TO AVOID POTENTIAL INJURY AND/OR EQUIPMENT DAMAGE. THE FOLLOWING SAFETY CHECK LIST SHOULD BE THOROUGHLY REVIEWED AND ADHERED TO BEFORE OPERATING OR PERFORMING MAINTENANCE ON THE MIXER.

1. USE ONLY THE LIFTING DEVICES PROVIDED ON YOUR UNIT TO INSTALL THE MIXER. USE SHOULDERED EYEBOLTS AND TIGHTEN SECURELY TO HANDLE COMPONENT PARTS. WE STRONGLY RECOMMEND THAT THE EYEBOLTS OR HOIST RINGS BE OF THE SAFETY SWIVEL TYPE WITH 360° ROTATIONAL CAPABILITY.
2. DO NOT CONNECT THE PRIME MOVER TO THE POWER SOURCE UNTIL ALL COMPONENTS ARE ASSEMBLED. THE MIXER IS INSTALLED AND ALL HARDWARE IS TIGHTENED TO THE PROPER TORQUE WHICH IS SPECIFIED IN THE OPERATION AND MAINTENANCE MANUALS SUPPLIED BY LIGHTNIN AND HEI.
3. DO NOT OPERATE SHAFT SEALING DEVICES AT TEMPERATURES OR PRESSURES HIGHER THAN THOSE SPECIFIED IN THE MANUAL OR ON NAMEPLATES.
4. PRIOR TO SERVICING MIXER, ELECTRICALLY DISCONNECT POWER.
5. DO NOT TOUCH ROTATING MIXER PARTS.
6. DO NOT OPERATE MIXER FOR SERVICE OTHER THAN ITS INTENDED USE.
7. DO NOT MAKE ANY FIELD CHANGES OR MODIFICATIONS (HORSEPOWER, OUTPUT SPEED, SHAFT LENGTHS, IMPELLERS, ETC.) WITHOUT REVIEWING THE CHANGE WITH YOUR LIGHTNIN AND HEI SALES REPRESENTATIVE OR THE LIGHTNIN AND HEI CUSTOMER SERVICE DEPARTMENT.
8. BEFORE OPERATING THE MIXER, IT IS VERY IMPORTANT TO CHECK THE FOLLOWING ITEMS:
   - A) MAKE SURE MIXER IS PROPERLY GROUNDED.
   - B) ENSURE ALL PROTECTIVE GUARDS AND COVERS ARE INSTALLED.
   - C) ENSURE ALL DETACHABLE COMPONENTS ARE SECURELY COUPLED TO THE MIXER.
   - D) THOROUGHLY REVIEW AND COMPREHEND THE MIXER OPERATION INSTRUCTIONS, SUPPLIED BY LIGHTNIN.
   - E) ENSURE THE DRIVE OR SEAL SHAFT ROTATES FREELY BY HAND.
   - F) ENSURE ALL PERSONNEL AND EQUIPMENT ARE CLEAR OF ROTATING PARTS.
   - G) ENSURE ALL EXTERNAL CONNECTIONS (ELECTRICAL, HYDRAULIC, PNEUMATIC, E[illegible] HAVE BEEN COMPLETED PER THE APPLICABLE CODES.
9. DO NOT ENTER THE MIXING VESSEL UNLESS:
   - A) THE MIXER POWER SUPPLY IS LOCKED OUT.
   - B) THE MIXER SHAFT IS FIRMLY ATTACHED TO THE MIXER DRIVE OR THE SH[illegible] . IS SUPPORTED SECURELY FROM BELOW.

SECTION 1
INITIAL INSPECTION, SHIPPING ARRANGEMENTS AND STORAGE

1-1. As soon as you have uncrated your mixer, check it for shipping damage and report any damage immediately to the carrier and to our factory.

1-2. Mixer and impellers are packed together. The mixer shaft is packed in a separate container. Carbon steel mixer shafts and impellers are wrapped with Shell VPI-coated paper for domestic shipment. For foreign shipment these parts are coated with a rust inhibitor that is easily removed with kerosene, or similar solvents.

1-3. Do not remove wrappings or protective coating if the mixer is to be stored before it is placed in operation. Store the mixer in a clean, dry location. With circulating air, free from wide or rapid variations in temperature. When gear drive models have been stored for more than a year, the condition of the gear lubricant should be checked before the mixer is installed. (See lubrication instructions.)

SECTION 2 MOUNTING

2-1. Lift the mixer from its crate by the motor handle. Set the clamp squarely on the mounting surface so that both vertical and horizontal lines of clamp contact bare evenly. Remove the hex key wrench stored in the clamp and tighten the clamp screw securely. The wrench has been sized to properly tighten the clamp screw. 3/8-inch for HEI XD or XJ 174 thru 350, 7/32-inch for XD or XJ 30 thru 117. DO NOT IMPACT THE WRENCH OR USE AN EXTENSION.

2-2. Impeller rotation must be according to the arrow on the mixer nameplate.

a. Single phase totally enclosed motors are wired at our factory for correct rotation.

b. All three phase and explosion proof motors must be field wired for proper rotation. If rotation does not agree with nameplate reverse any two line leads.

c. Dual voltage motors must be wired for the desired voltage. Refer to the connection diagrams provided on the motor nameplate or inside the conduit cover.

SECTION 3 MOTOR CONNECTIONS

3-1. Mixers are equipped with heavy motors specifically designed for service in totally enclosed or explosion-proof construction.

a. Constant speed mixers are furnished with energy efficient motors unless otherwise specified.

b. For variable speed mixers with electronic or air driven motors, refer to supplementary instructions for motor control data and connection requirements.

3-2. SINGLE PHASE MOTORS FOR HEI XD/XJ30 THRU 87 (or motors nameplated 1/4 thru 1 Horsepower).

a. Totally enclosed motors are furnished with eight-foot cords fitted with UL approved three prong grounded plugs suitable for the correct voltage.

b. Explosion proof motors are furnished with a pipe tap connection and suitable leads. A conduit box with internal switch is available for explosion proof service.

c. All single phase motors are equipped with an internal over-temperature device with manual reset. If the thermal trips, wait (15) fifteen minutes and depress the reset button on the motor body. A click indicates re-set.

3-3. THREE PHASE MOTORS

a. All totally enclosed motors are equipped with a conduit box and suitable leads.

b. All explosion proof motors are furnished with a pipe tap connection and suitable leads.

IMPORTANT: ALL THREE PHASE MOTORS (Except explosion proof on XD/XJ 30 thru 65 or other XP motors nameplated 3/4 horsepower and below) are equipped with over-temperature thermostats which are designed to interrupt current in the holding coil of magnetic starters only. The motor thermostats will reset themselves, but the control panel "start" button must be depressed to start the motor.

EXPLOSION PROOF MOTORS ON XD/XJ 30 THRU 65 or XP motors nameplated 3/4 horsepower and below are equipped with automatic over-temperature circuits which can trip and reset themselves after the motor cools. TO AVOID INJURY DUE TO UNEXPECTED STARTUP, DISCONNECT FROM POWER UNTIL THE MOTOR COOLS.

SECTION 4
MIXER SHAFT INSTALLATION

4-1. Position the impeller(s) on the mixer shaft. Refer to the specification sheet for recommended dual impeller spacing. The larger wedge shaped portion of the hub body must face up towards the mixer. The top of the hub is stamped "UP". Refer to Figure 2 for general orientation reference.

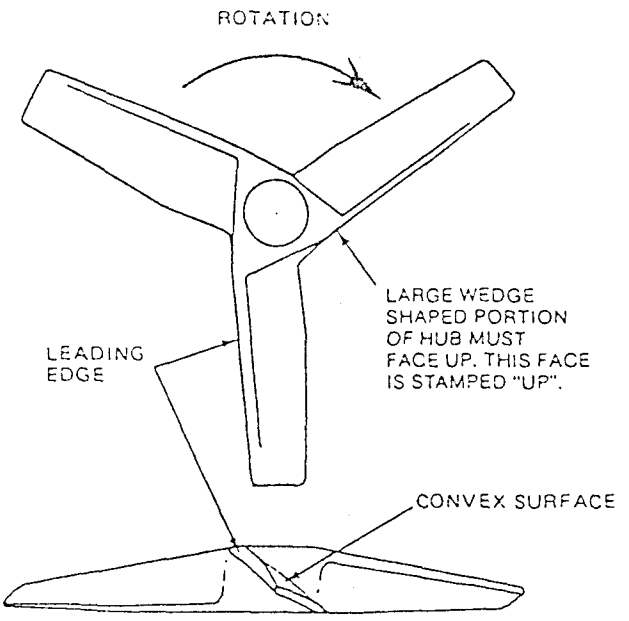

FIGURE 2. IMPELLER ORIENTATION

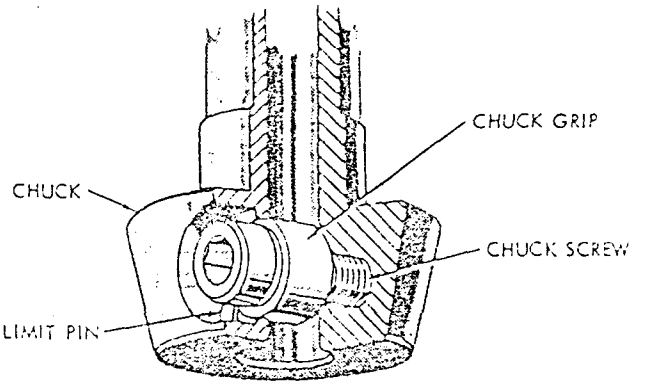

FIGURE 3. CHUCK DETAILS

4-2. To install the mixer shaft, back off the chuck screw (refer to Figure 3) as far as the limit pin will allow. DO NOT FORCE. Insert the mixer shaft into the chuck bore as far as it will go. For stepped shafts, make sure the shaft shoulder seats tightly against the chuck face. Draw up the chuck screw with the wrench provided, rotating the shaft slightly back and forth to make sure that the chuck grip seats against the flat of the shaft. Tighten the chuck screw with the wrench provided. The wrench has been properly sized to tighten the screw. DO NOT IMPACT THE WRENCH OR USE AN EXTENSION. NOTE: A safety feature is provided by a slight taper in the flat on the mixer shaft. The shaft cannot drop out unless the grip is intentionally released.

SECTION 5
POSITIONING

5-1. The positioning device of the mixer combines a vertical index on the ball of the housing and a horizontal index on the ram of the clamp socket. Mixing positions are established by referencing one index against the other. Figure 4 shows the indexes in D-5 position, a typical setting. To change the mixing position, loosen the wedge screw, adjust the mixer by its motor handle, and tighten the wedge screw. The wedge screw has a limited amount of travel before the wedge bottoms against the king bolt. If the wedge does eventually bottom, readjust the wedge assembly per 8-9, Step e.

5-2. The correct position for the mixer will vary in individual cases. Use Table I to position the mixer in relation to tank diameter and height for normal applications. In operation, some adjustment of position may be desirable for best results.

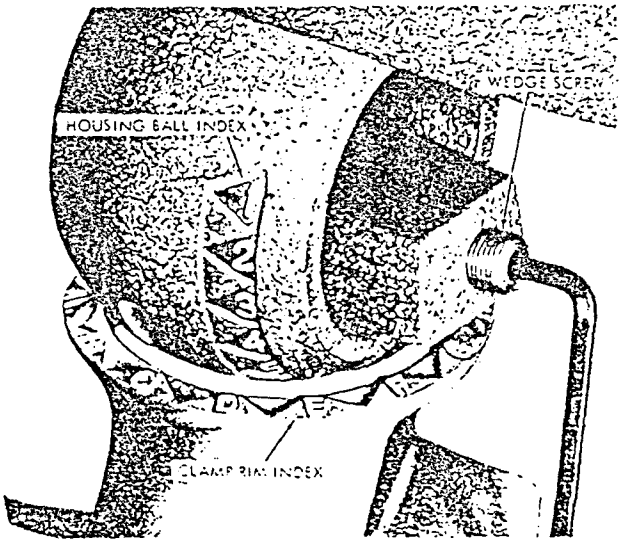

FIGURE 4. POSITIONING INDEXES

TABLE I

MIXING PATTERN	Batch Height (Z) / Tank Diameter (T)	CLAMP RIM INDEX (HORIZONTAL ANGLE)	HOUSING BALL INDEX (VERTICAL ANGLE)
NORMAL MIXING Off-center position Top to bottom turnover No swirling	Z/T less than 1 Z/T greater than 1	D D	5 6
VORTEXING On-center position	Z/T less than 1 Z/T greater than 1	E E	5 6
SWIRLING Off-center position Usually vortexing	Z/T less than 1 Z/T greater than 1	F F	6 7

Swirling and vortexing positions may be useful for surface introduction of solids, liquids, or gases.

SECTION 6
MIXER OPERATION

6-1. LIGHTNIN and HEI are designed to operate continuously at normal and low liquid levels and in air. IMPORTANT: Variable speed drives sometimes have critical ranges where the unit should not be operated during drawoff or in air. These ranges will be indicated on a warning decal at the speed control. It is not good practice to operate any mixer continuously when extreme vortexing or surging occurs.

6-2. Turn on the mixer. Allow time enough for the mixing pattern to be established, then make any required adjustment of position.

6-3. At the end of two weeks service, check the housing cap screws, clamp screw, wedge screw, and chuck screw for tightness.

6-4. At the end of the mixing cycle, it is good practice to turn off the mixer before the tank has been drained to a level which will result in excessive splashing.

6-5. The gear drive models (XJ) include a built-in shock load feature. The grip springs (See Figure 5) provide a keyless friction drive between the gear and the drive shaft, and the springs will slip before the mixer is damaged. Therefore, if the mixer shaft does not rotate when the motor is on, remove the motor (41) from the housing (36), per Paragraph 9-1, and tighten the grip spring locknut (10) securely. (Table 4 on Page 18 lists the recommended tightening torques for this locknut. If a torque wrench is not available, be sure locknut is tightened sufficiently to prevent grip spring slippage.)

NOTE: Item 70, Oil Seal and Item 71, Slinger are furnished on XJ 174 thru 350 only.

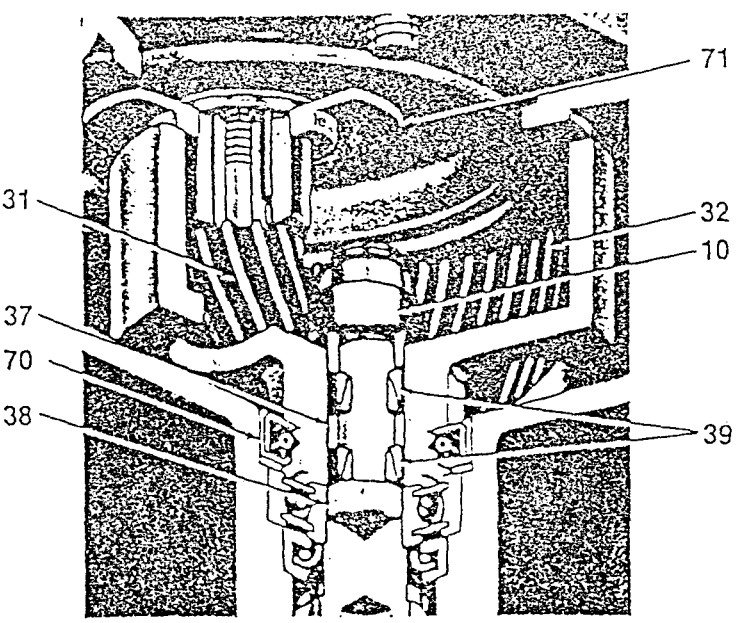

31 — Pinion
37 — Grip Spring Spacer
38 — Drive Shaft
32 — Internal Gear
10 — Grip Spring Lock Nut
39 — Grip Spring Set
70 — Oil Seal
71 — Slinger

FIGURE 5. GRIP SPRING ASSEMBLY

SECTION 7
LUBRICATION

7-1. LIGHTNIN and HEI mixer has been lubricated at the factory with the correct type and amount of high quality lubricants. Lubricant cleanliness is protected by properly designed closures.

7-2. All mixer bearings are sealed type with contact rubbing seals and are pre-packed with lubricant. Relubrication of these bearings is not necessary.

7-3. The gear chamber in XJ series models has been factory filled with a grease suitable for an ambient temperature range of +50°F to +200°F. Under normal operating conditions, this lubricant need not be changed until the unit has been dismantled for some reason.

Under adverse operating conditions, periodic changes of lubricant may be necessary. Adverse conditions are defined as operating in very humid, dust laden or chemical atmospheres, or where wide variations in ambient temperature occurs. Such adverse conditions can lead to deterioration of lubricant compounds and additives and it is recommended that the condition of the grease be checked within six months after startup. Reputable lubricant suppliers can analyze the grease and recommend economical, safe change schedules.

7-4. CHANGING GEAR LUBRICANT

a. Make sure the mixer housing is vertical to prevent spillage.

b. Remove the housing to motor capscrews and lift off the motor by its handle.

c. Remove all old grease from the gear chamber and wipe clean.

d. Pack the chamber with fresh grease. (See notes ① and ②) Paddle the grease to fill voids and remove air pockets, rotating the shaft and shaking the housing while paddling.

e. Check the "O" ring in the flange of the motor and replace if it is deformed, cut or deteriorated.

f. Carefully align the motor rabbet and guide into the housing bore. Guide the pinion into mesh with the gear and make sure the "O" ring is properly seated in the groove.

g. Check for free movement of all components by rotating the drive shaft.

h. If satisfactory, replace the housing to motor hardware and tighten securely.

7-5. GEAR LUBRICANT RECOMMENDATION

Use only a lubricant suitable for the temperature and operating conditions. See Table 2.

GREASE LUBRICANT

Ambient Temp. Range	NLGI#	Soap Base	Min. Oil Viscosity S.S.U.	Max. Operating Temp.
50°F to 200°F	0	Sodium or Lithium	4,000 @ 100°F 150 @ 210°F	200°F

TABLE 2

For operation in ambient temperatures below +50°F, we recommend use of a synthetic (Mobil SHC 32 or equal) compounded only with synthesized hydrocarbon fluids. This grease is suitable for a wide range of ambient temperatures between -30°F and +200°F and should be considered where seasonal lubricant changes are necessary.

GEAR CHAMBER CAPACITY	
MODEL	GREASE-LBS.
XJ 30 & 43	1.25 ①
XJ 65 THRU 117	2.5 ①
XJ 174 THRU 350	6.0 ②

TABLE 3

① PACK CHAMBER FLUSH WITH TOP OF THE INTERNAL GEAR.

② PACK CHAMBER TO WITHIN 3/4" OF TOP OF INTERNAL GEAR.

SECTION 8
ASSEMBLY & DISASSEMBLY INSTRUCTIONS DIRECT DRIVE — XD SERIES

8-1. REMOVING THE MOTOR FROM THE HOUSING

a. Remove the mixer shaft from the chuck.

b. Remove housing cap screws and washers (1, 2, and 20).

c. Insert an Allen wrench in the chuck screw (8) to prevent the drive shaft from rotating.

d. Remove shaft screw (4) through the drive shaft bore in one of the following ways.

1. Fractional horsepower XD 30 thru 117: Use a Phillips screwdriver.

2. XD 174 thru 350: Use a 5/16-inch long-shank hex wrench.

e. The upper end of the drive shaft is closely fitted to the motor shaft. Use care in separating the motor (41) and housing (36) by one of the following methods.

1. Tap evenly around the upper edge of the housing with a mallet.

2. If the two assemblies do not readily separate, tighten the propeller on the mixer shaft and tighten the mixer shaft in the chuck. Separate motor and housing by tapping the top of the propeller hub with a mallet. Then remove the mixer shaft.

f. On XD 30 thru 117 models the motor shaft key (46) is lightly cemented in the motor shaft keyway.

8-2. REMOVING DRIVE SHAFT, BEARING, AND OIL SEAL FROM THE HOUSING

a. Follow the procedure of Paragraph 8-1.

b. Use Waldes Truarc No. 4 pliers to remove retaining ring (22).

c. Mount housing, large end upward, in an arbor press and press drive shaft (38) through the lower opening of the housing.

d. Turn the housing large end down and press ball bearing (27) and oil seal (24) downward out of the housing.

8-3. DISASSEMBLING THE CLAMP

a. Loosen the wedge screw (6).

b. Remove king bolt (3) and washer (12) to release wedge assembly and clamp assembly from the positioning ball of the housing.

c. Separate wedge top (17) and wedge bottom (16) and remove wedge screw (6).

d. Remove vibration pad (40) from clamp (33).

8-4. DISASSEMBLING THE CHUCK

a. Remove the limit pin (11) by driving it into the counterbored hole.

b. Remove the chuck screw (8).

c. Remove snap ring (21), chuck grip (34) and chuck washer (18) from the chuck screw.

8-5. PREPARING FOR ASSEMBLY

a. Clean all parts thoroughly.
b. Inspect for the following defects.

1. Cracks or damage of the housing.
2. Dents, gouges, or scoring of the drive shaft, housing bore, and particularly the mating faces of the motor and housing.
3. Wear or deterioration of the vibration pad.

c. Repair or replace defective parts. It is good practice to replace an oil seal which has been removed from the housing. Apply a small quantity of bearing grease to the housing bore and around the oil seal lip to provide lubrication and to make the seal more effective.

d. Replace the ball bearing if it shows indications of wear.

8-6. ASSEMBLING THE DRIVE SHAFT IN THE HOUSING

a. Mount the housing (36) in an arbor press, large end up.

b. Press the ball bearing (27) on its outer race to the shoulder of the housing bore.

c. Turn the housing large end down and press the oil seal (24), sealing lip inward, flush with the lower end of the housing.

d. Support the housing, large end down, by resting the inner race of the ball bearing on a suitable sleeve.

e. Grease the lip of the oil seal and press the drive shaft (38) into the ball bearing until the shoulder of the shaft registers against the inner race of the bearing.

f. Use Waldes Truarc No. 4 pliers to install retaining ring (22) in the shaft groove.

g. Turn the housing large end down and press the drive shaft until the chuck head contacts the small end of the housing.

8-7. ASSEMBLING THE CHUCK

a. Assemble chuck washer (18), chuck grip (34), and snap ring (21) on chuck screw (8).

b. Thread the chuck screw into the chuck end of the drive shaft far enough to insert the limit pin (11) so that the end of the pin is 3/16 of an inch under flush.

8-8. ASSEMBLING THE MOTOR TO THE HOUSING

a. If the drive shaft has not been removed from the housing, repeat step g, Paragraph 8-6.

b. Install the motor shaft key (46).

1. On Models XD 174 thru 350 — Install key in drive shaft keyway.
2. On Models XD 30 thru 117 — If the key has been removed, clean key and motor shaft keyway and apply Loctite Sealant, Grade E. (American Sealants Co.) to both items before reassembling.

c. Apply a light film of oil to both shafts. Align the mating keyways and insert one shaft into the other, without forcing, until the shafts are securely butted. There will be a small gap between the motor face and housing face.

d. Align the motor and housing so that the switch conduit box, or junction box of the motor and the ball of the housing are on the same side.

e. Align the screw holes and install the housing cap screws and washers (1, 2 and 20).

f. Draw up the screws evenly until the housing face is just snug with the motor face, but do not completely tighten the screws.

g. Insert the Allen wrench in the chuck screw to keep the drive shaft from turning, then thread in and tighten the shaft screw (4).

h. Tighten the four housing cap screws evenly.

8-9. ASSEMBLING THE CLAMP

a. Thread the clamp screw (5) through the outer arm of the clamp (33). Slide the cup washer (15) over the end of the clamp screw. Slide the retaining ring (14) onto the clamp screw. Position the retaining ring approximately 3/16" from the end of the clamp screw to allow free movement of the cup washer.

b. Assemble wedge top (17), wedge screw (6), and wedge bottom (16) and set the assembly in place in the ball of the housing.

c. Assemble clamp, vibration pad (40), king bolt (3), and washer (12).

d. Pass king bolt through the slot in the ball of the housing and thread it loosely into the wedge top.

e. Back off the wedge screw all the way, then advance it two turns. With the wedge bottom in this position, tighten the king bolt until the clamp socket can just be moved on the housing ball.

SECTION 9
ASSEMBLY & DISASSEMBLY INSTRUCTIONS — GEAR DRIVE — XJ SERIES

9-1. REMOVING THE MOTOR FROM THE HOUSING

a. Set the mixer in a vertical position to prevent spilling the gear lubricant.

b. Remove four housing cap screws and washers (1, 2, and 20).

c. Raise motor (41) by its motor handle to separate motor and housing (36).

d. Remove "O" ring (26).

9-2. REMOVING THE PINION FROM THE MOTOR

a. Hold the pinion (31) from turning and remove the pinion cap screw (4) in one of the following ways.

1. XJ 30 thru 117 — Use a Phillips screwdriver.

2. XJ 174 thru 350 — Use a 5/16-inch Allen wrench.

3. For XJ 174 thru 350 — With nylon slinger, the slinger must be removed by breaking it. Place a wooden block under the slinger and strike the opposite side with a chisel.

b. Remove the pinion with a bearing puller.

9-3. REMOVING DRIVE SHAFT, BEARINGS, AND OIL SEALS FROM THE HOUSING

a. Remove the lubricant from the gear chamber.

b. Remove the grip spring locknut (10) from the upper end of the drive shaft. Use one of the following methods to hold the drive shaft from turning.

1. XJ 30 thru 117 — Insert an Allen wrench (43) in the chuck screw.

2. XJ 174 thru 350 — Remove the chuck assembly. (See paragraph 8-4). Insert a 1-foot length of 1-inch diameter bar in the chuck grip bore.

c. Thread a nut on the end of the drive shaft to protect the threads when pressing out the shaft.

d. Mount the housing in an arbor press, large end upward, and press the drive shaft clear of the internal gear bore.

e. Remove the internal gear (30), the two grip spring sets (39), and the grip spring spacer (37).

f. Remove the drive shaft, with the bearing inner ring (29) in place, through the lower opening of the housing.

g. If it is necessary to remove the bearing inner ring, start it from its seat with a thin screwdriver or wedge, then remove it from the drive shaft with a bearing puller.

h. XJ 174 thru 350 only — Pry the oil seal (70) from the housing bore as shown in Figure 6.

1. Insert a 7/8 bolt into the ball bearing (27) bore.

2. Use the bolt head as a fulcrum and pry out the oil seal (70) with pliers.

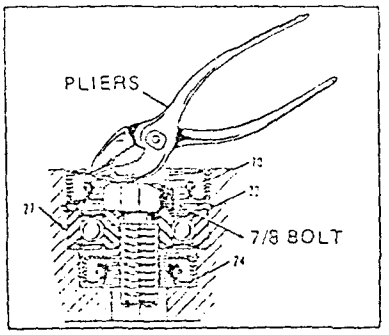

FIGURE 6

i. Use Waldes Truarc No. 4 pliers to remove internal retaining ring (22).

j. Remove ball bearing (27) and upper oil seal (24) through the upper opening of the housing.

k. Remove internal retaining rings (23).

l. Mount the housing, large end upward, in an arbor press and press out oil seal (25) and outer ring and roller assembly (28).

9-4. DISASSEMBLING THE CLAMP
(See Paragraph 8-3).

9-5. DISASSEMBLING THE CHUCK
(See Paragraph 8-4.)

9-6. PREPARATION FOR ASSEMBLY

a. Clean all parts thoroughly.

b. Inspect for the following defects.

1. Cracks or damage of the housing.

2. Dents, gouges, or scoring of the drive shaft, housing bore, and particularly the mating faces of the motor and housing.

3. Wear or deterioration of the vibration pad.

c. Repair or replace defective parts. It is good practice to replace an oil seal which has been removed from the housing. Apply a small quantity of bearing grease to the housing bore and around the oil seal lip to provide lubrication and to make the seal more effective.

d. Replace the "O" ring if it is cut, deformed, or deteriorated.

e. Replace the ball bearing and roller bearing (including the bearing inner ring) if they show indications of wear.

9-7. ASSEMBLING THE DRIVE SHAFT IN THE HOUSING

a. Mount the housing (36) in an arbor press, large upward.

b. Press the upper oil seal (24), sealing lip up approximately 1/8-inch below the shou the bore.

c. Press the ball bearing (27) on its o against the shoulder of the bore.

d. Install retaining ring (22).

e. XJ 174 thru 350 Only

1. Apply a heavy coating of ball bearing grease to the top of the ball bearing (27).

2. Apply a coating of Loctite "Bearing Mount" grade to the outside of a new oil seal (70).

3. Press the oil seal (70), sealing lip up, into the housing until it seats on the retaining ring (22).

f. Turn the housing large end down in the press and install the inner of the two lower retaining rings (23).

g. Pack the outer ring and roller assembly (28) with a suitable bearing grease and press it into the housing bore until it registers against the retaining ring.

h. Press oil seal (25), with its sealing lip towards the large end of the housing, against the outer ring and roller assembly.

i. Install outer retaining ring.

j. If the bearing inner ring (29) has been removed from the drive shaft (38), press it in place.

k. Apply a thin film of light oil on the tapered surfaces *only* of each grip spring set. CAUTION: For proper operation of the grip springs, oil *must not* get between the grip spring driving surfaces and the drive shaft or gear bore.

l. Install the inner ring of the lower grip spring set (39) so that the thicker edge seats against the shaft shoulder.

m. Place the housing on its side and grease the lips of the oil seals.

n. Hold the internal gear (32) in place in the gear chamber and pass the drive shaft through its bearings as far as it will go into the hub of the gear.

o. With the gear on the end of the shaft, turn the housing large end down and press the shoulder of the drive shaft against the inner race of the ball bearing (27).

p. Turn the housing large end up. Center the internal gear on the drive shaft and install the external ring of the lower grip spring set (39), grip spring spacer (37), and upper grip spring set (39). Both grip spring sets should be installed with the thicker edge of the external ring upward. (See Figure 5 on page 9).

q. Apply a thin coating of light oil on the threads of the drive shaft and the bottom surface of the grip spring locknut.

r. Thread the grip spring locknut (10) onto the end of the drive shaft (finger tight). Rotate the internal gear (32) by hand and at the same time tighten down on the locknut until the internal gear can no longer be rotated. Tighten the locknut securely. (Table 4 lists the recommended tightening torques for this locknut. If a torque wrench is not available, be sure locknut is tightened sufficiently to prevent grip spring slippage.) Use one of the following methods to prevent the drive shaft from turning while performing this operation.

1. XJ 30 thru 117 — Reassemble the chuck assembly. (See Paragraph 8-7.) Insert an Allen wrench in the chuck screw.

2. XJ 174 thru 350 — With the chuck assembly removed from the drive shaft, insert a 1-foot length of 1-inch diameter bar in the chuck grip bore.

9-8. ASSEMBLING THE PINION ON THE MOTOR SHAFT

a. XJ 174 thru 350 only

If the slinger has been removed, reinstall on the motor shaft.

1. For units with aluminum slinger, allow 1/32 to 3/32 gap between the motor oil seal and top of slinger. Check shaft end play and rotate to make sure slinger rotates freely. Coat the set set screw threads with Loctite and tighten the set screw securely.

2. For units with nylon slinger, position on the motor shaft.

b. Apply a thin film of grease to the motor shaft or pinion shaft.

c. Make sure that the motor shaft key (46) is in place in the motor shaft keyway.

d. Assemble the pinion on the motor shaft by driving it into place with light strokes of a mallet. For units with nylon slinger, be sure the pinion teeth mesh with slinger teeth.

e. Make sure that pinion and motor shaft butt securely, then install and tighten the pinion screw (4) with lockwasher (48).

9-9. ASSEMBLING THE CHUCK
(See Paragraph 8-7).

9-10. ASSEMBLING THE MOTOR TO THE HOUSING

a. Fill the gear chamber of the housing (36) level with a suitable lubricant. (See Section 7.) Make sure that grease is solidly packed without air pockets by paddling the grease, rotating the drive shaft by hand, tapping or shaking the housing.

b. Clean the mating surfaces of the motor (41) and housing.

c. Place the "O" ring (26) on the motor.

d. Align motor rabbet with the opening of the housing and lower motor into place using care so as not to damage the "O" ring.

e. Align the motor and housing so that the switch, conduit box, or junction box of the motor and the bail of the housing are on the same side.

f. Align the screw holes and install the housing cap screws and washers (1, 2, and 20).

g. Rotate the drive shaft several revolutions by hand to make sure that all parts are running freely.

9-11. ASSEMBLING THE CLAMP. (See Paragraph 8-9.)

CONNECTION DIAGRAM FOR SINGLE PHASE MOTORS

SINGLE PHASE

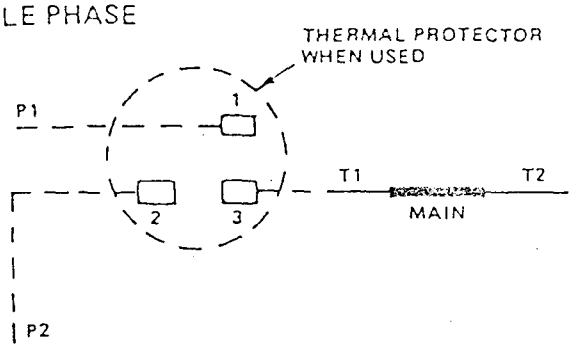

DUAL VOLTAGE REVERSIBLE WITH OR WITHOUT THERMAL PROTECTOR

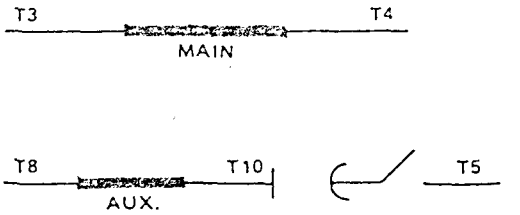

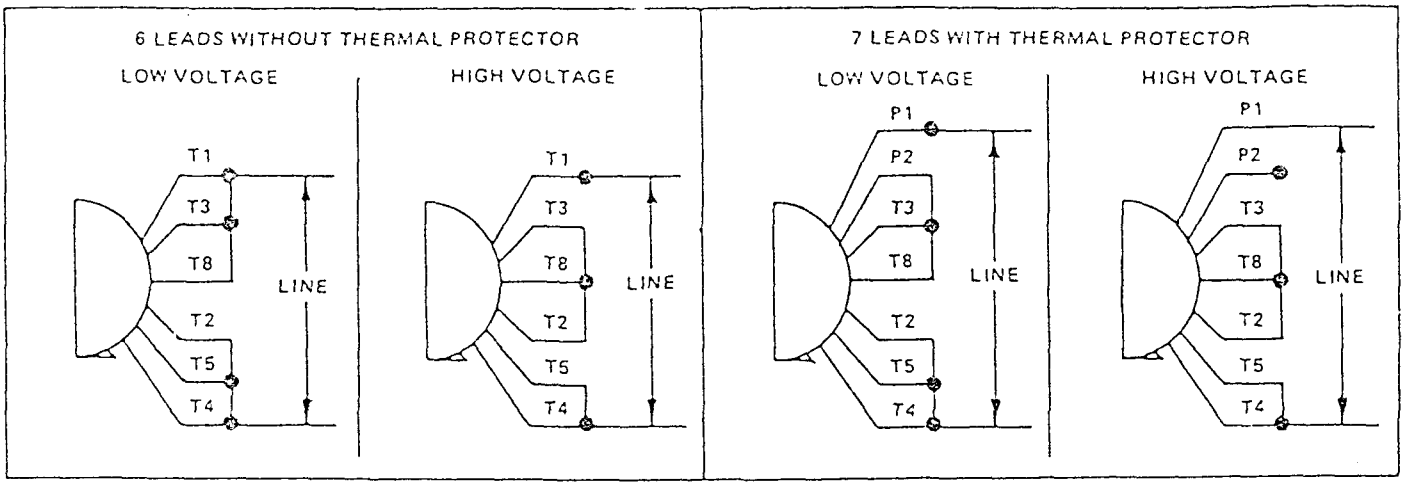

TO REVERSE ROTATION, INTERCHANGE LEADS T5 AND T8

CONNECTION DIAGRAMS FOR THREE PHASE MOTORS

FIGURE 1A – CONNECTION DIAGRAM

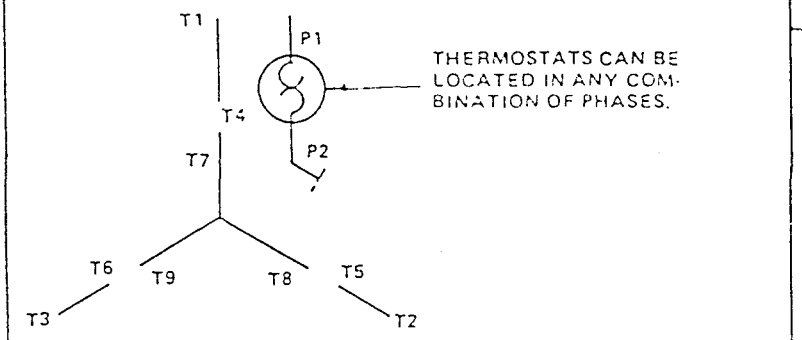

TYPICAL THERMAL CONNECTION IN FULL VOLTAGE STARTERS

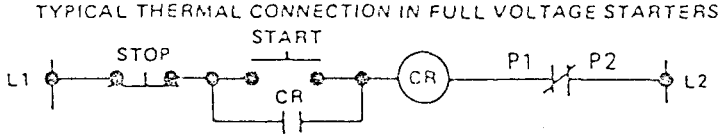

LOW VOLTAGE	HIGH VOLTAGE
P1, P2 — THERMOSTAT LEADS	P1, P2 — THERMOSTAT LEADS
T1, T7 — L1	T1 — L1
T2, T8 — L2	T2 — L2
T3, T9 — L3	T3 — L3
T4, T5, T6	T4, T7
	T5, T8
	T6, T9

TO REVERSE ROTATION, INTERCHANGE ANY TWO LINE LEADS

NOTES: (1) The diagram in Figure 1A pertains to:

a. TOTALLY ENCLOSED three phase motors used on XD/XJ Series 30 thru 350, XL 100 thru 500 & SXJ/SXJS 174 & 230 with DURA-MIX™ energy efficient motors or other totally enclosed motors nameplated 1/4 thru 5 horsepower.

b. EXPLOSION PROOF three phase motors used on XD/XJ Series 87 thru 350, XL 100 thru 500 & SX/SXJS 174 & 230 with DURA-MIX™ energy efficient motors or other explosion proof motors nameplated 1 thru 5 horsepower. For XP motors used on XD/XJ Series 30 thru 65 and XP motors nameplated 3/4 H.P. and less, see Figure 1B.

(2) The thermostats in above motors are designed to interrupt current only in the holding coil of magnetic starters and must be wired into the motor control circuit. The thermostats re-set themselves after the motor cools, but the motor must be re-started by depressing the start button on the starter panel.

FIGURE 1B – CONNECTIONS FOR THREE PHASE EXP. PROOF MOTORS ON XD/XJ 30 THRU 65 OR MOTORS NAMEPLATED 3/4 HORSEPOWER OR LESS

SINGLE VOLTAGE WITH THERMAL PROTECTOR	DUAL VOLTAGE WITH THERMAL PROTECTOR	LOW VOLTAGE	HIGH VOLTAGE
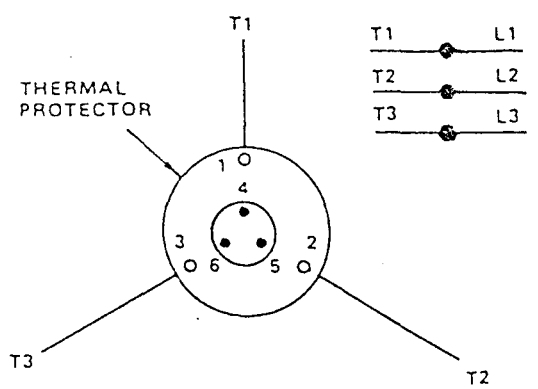	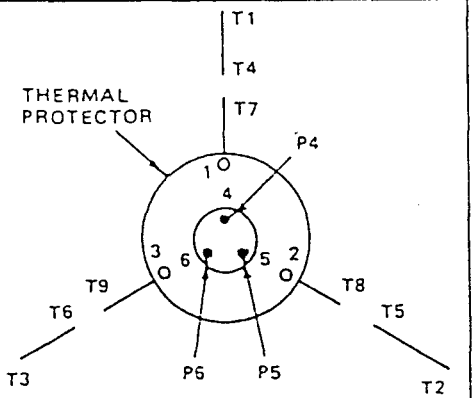	T1, T7 — L1 T2, T8 — L2 T3, T9 — L3 T4, P4 T5, P5 T6, P6	T1 — L1 T2 — L2 T3 — L3 T4, T7 T5, T8 T6, T9 P4 P5 P6

TO REVERSE ROTATION, INTERCHANGE ANY TWO LINE LEADS

WARNING: THESE MOTOR THERMALS RE-SET AUTOMATICALLY. TO AVOID INJURY DUE TO UNEXPECTED STARTUP, DISCONNECT FROM POWER UNTIL MOTOR COOLS.

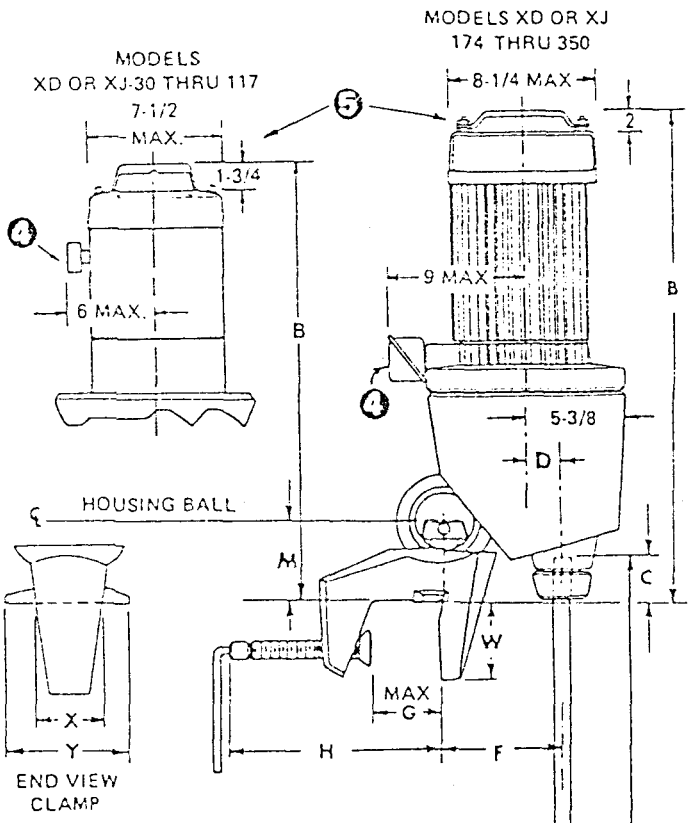

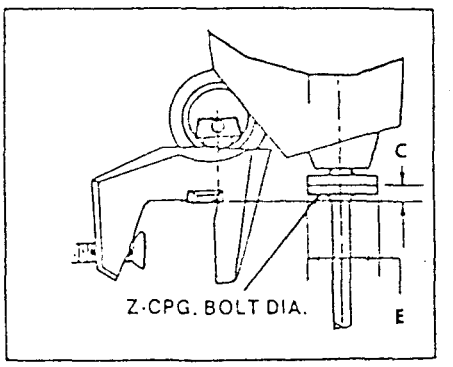

ALTERNATE COUPLING CONSTRUCTION DETAIL.

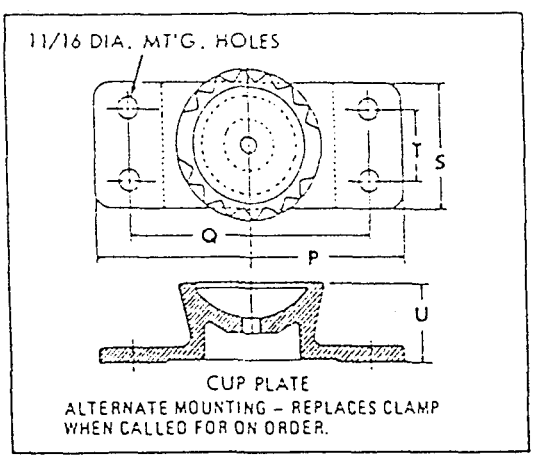

CUP PLATE
ALTERNATE MOUNTING – REPLACES CLAMP WHEN CALLED FOR ON ORDER.

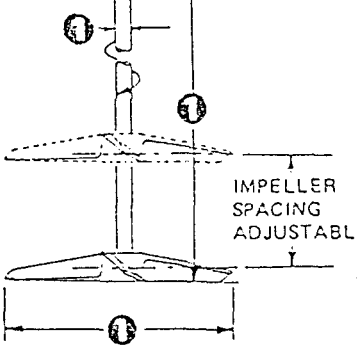

DETAIL "A" STANDARD CHUCK CONSTRUCTION

NOTES:

1. REFER TO ORDER FOR:
   - A. MODEL NUMBER AND MOTOR HORSEPOWER.
   - B. SHAFT DIAMETER AND LENGTH.
   - C. QUANTITY AND SIZE OF IMPELLERS.
   - D. MOTOR SPECIFICATIONS.
   - E. SHAFT CONNECTION – STANDARD CHUCK OR ALTERNATE COUPLING CONSTRUCTION.
2. MIXER WEIGHT CAN VARY WITH MOTOR CHARACTERISTICS, SHAFT AND IMPELLER SELECTION. WEIGHTS SHOWN INCLUDE SHAFT AND STANDARD DUAL IMPELLERS.
3. DIMENSION "B" IS MAXIMUM. CAN VARY SLIGHTLY DEPENDING ON MOTOR ENCLOSURE.
4. CONDUIT BOX NOT INCLUDED WITH EXPLOSION PROOF MOTOR.
5. MOTOR HANDLES SHOWN 90° OUT OF POSITION.
6. "D" OFFSET DOES NOT APPLY TO XD SERIES.

XD SERIES – DIRECT DRIVE MODELS

MODEL	② APPROX. MIXER WT. LBS.	STANDARD IMPELLER DIA'S. ① SINGLE	DUAL	B ③	C WITH CHUCK	C WITH CPLG	E	F	G	H	P	Q	S	T	U	W	X	Y	Z
XD-30	54	3.6	3.4	19-3/8	4-3/4	7/8	3-7/8	4	3	9	9	7	3-1/2	2	2-1/4	3-1/8	2-3/8	5-3/16	3/8
XD-43	70	4.5	3.8																
XD-67	90	5.2	4.5	21	5-1/2	2	3-7/8	4	3-3/4	11	10	8-1/2	3-5/8	2	2-7/16	3-1/2	2-7/8	5-3/4	
XD-117	100	5.8	5.2	21-5/8															
XD-174	125	6.3	5.2	23-1/2	6	2-1/8	4-3/4	5	3-3/4	12	10	8-1/2	4	2-1/2	2-15/16	4-3/16	3-1/4	6-7/8	1/2
XD-230	130	6.8	5.9	25-1/4															

XJ SERIES – GEAR DRIVE MODELS

MODEL	② APPROX. MIXER WT. LBS	STANDARD IMPELLER DIA'S. ① SINGLE	DUAL	B ③	C WITH CHUCK	C WITH CPLG	D	E	F	G	H	P	Q	S	T	U	W	X	Y	Z
XJ-30	65	11.2	10.0	21	3-7/8	3/8	1-3/8	3-7/8	5	3	9	9	7	3-1/2	2	2-1/4	3-1/8	2-3/8	5-3/16	3/8
XJ-43	70	11.8	10.0																	
XJ-65	86	13.6	11.8	22-7/8	4-7/8	0	1-5/8	3-7/8	5-1/2	3-3/4	11	10	8-1/2	3-5/8	2	2-7/16	3-1/2	2-7/8	5-3/4	3/8
XJ-67	95	15.1	12.8																	
XJ-117	100	15.6	13.6	23-1/8																
XJ-174	125	17.0	15.1	26-5/8	4-5/8	5/8	1-7/8	4-3/4	6-1/2	3-3/4	12	10	8-1/2	4	2-1/2	2-15/16	4-3/16	3-1/4	6-7/8	1/2
XJ-230	135	18.0	15.6	28-3/8																
XJ-350	140	19.0	17.0																	

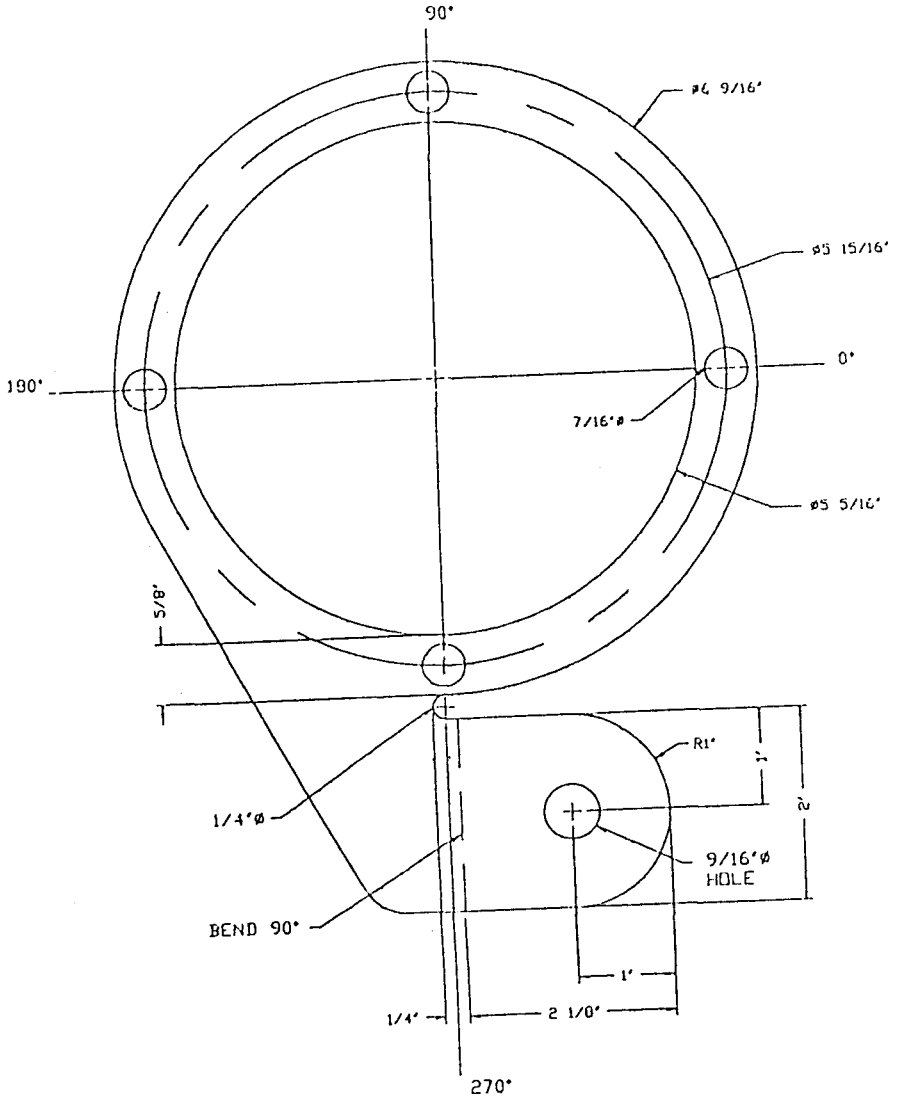

MIXER MOTOR SUPPORT

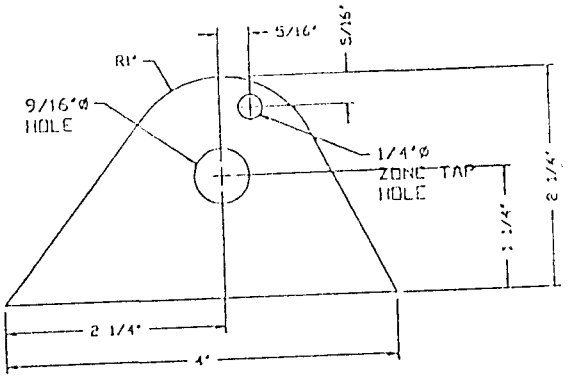

BRACKET

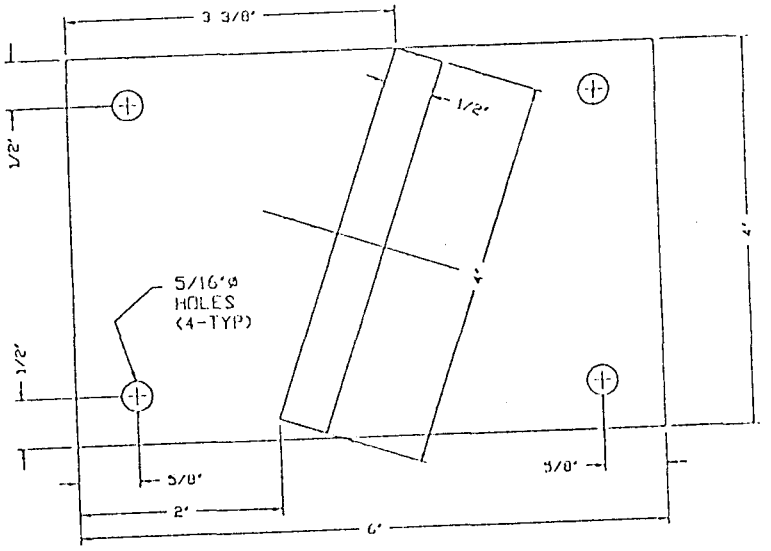

MOUNTING PLATE & BRACKET

REV	BY	DATE
DRAWN BY JTI		DATE 3/28/94
PROJECT ENGR.		
JOB NO.	CODE NO.	

PROPRIETARY INFORMATION

THIS DOCUMENT CONTAINS ACS ENVIRONMENTAL PROPRIETARY INFORMATION WHICH MAY NOT BE USED FOR THE BENEFIT OF OTHERS EXCEPT BY EXPRESSED PERMISSION OF ACS ENVIRONMENTAL.

DESCRIPTION

ACS ENVIRONMENTAL
303 SILVER SPRING RD
CONROE, TX. 77303 USA
TEL. (409) 856-4515

MIXER MOUNTING BRACKET FOR ALERT UNIT

SCALE		SHEET	REV
6=12	HCI-MIXER	1/1	0

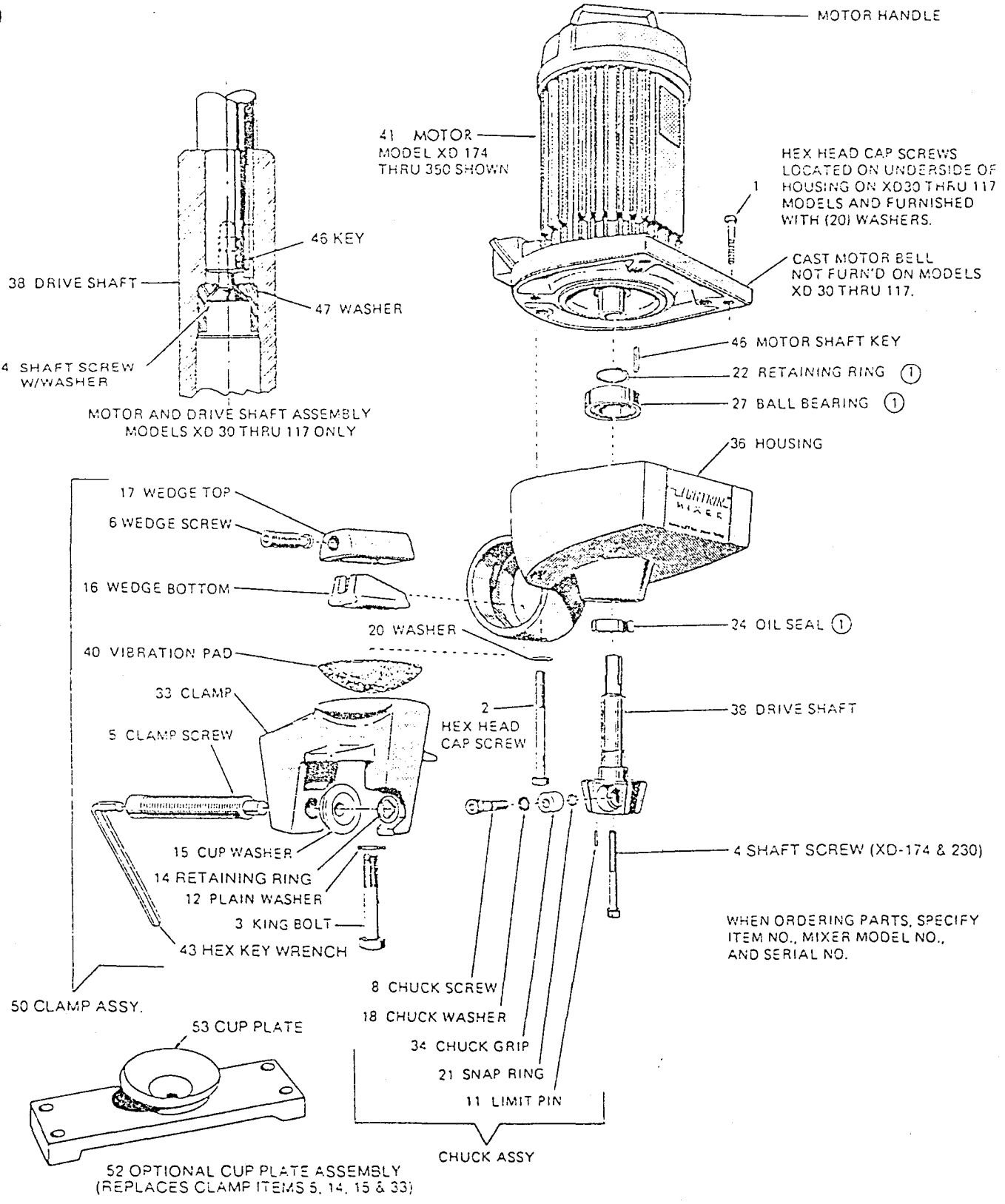
MOTOR HANDLE
41 MOTOR
MODEL XD 174
THRU 350 SHOWN
HEX HEAD CAP SCREWS
LOCATED ON UNDERSIDE OF
HOUSING ON XD30 THRU 117
MODELS AND FURNISHED
WITH (20) WASHERS.
1
CAST MOTOR BELL
NOT FURN'D ON MODELS
XD 30 THRU 117.
46 KEY
38 DRIVE SHAFT
47 WASHER
4 SHAFT SCREW
W/WASHER
MOTOR AND DRIVE SHAFT ASSEMBLY
MODELS XD 30 THRU 117 ONLY
46 MOTOR SHAFT KEY
22 RETAINING RING (1)
27 BALL BEARING (1)
36 HOUSING
17 WEDGE TOP
6 WEDGE SCREW
16 WEDGE BOTTOM
20 WASHER
24 OIL SEAL (1)
40 VIBRATION PAD
33 CLAMP
5 CLAMP SCREW
2
HEX HEAD
CAP SCREW
38 DRIVE SHAFT
4 SHAFT SCREW (XD-174 & 230)
15 CUP WASHER
14 RETAINING RING
12 PLAIN WASHER
3 KING BOLT
43 HEX KEY WRENCH
WHEN ORDERING PARTS, SPECIFY
ITEM NO., MIXER MODEL NO.,
AND SERIAL NO.
50 CLAMP ASSY.
8 CHUCK SCREW
18 CHUCK WASHER
34 CHUCK GRIP
21 SNAP RING
11 LIMIT PIN
CHUCK ASSY
53 CUP PLATE
52 OPTIONAL CUP PLATE ASSEMBLY
(REPLACES CLAMP ITEMS 5, 14, 15 & 33)
(1) RECOMMENDED SPARE PARTS

MODEL XD 174 THRU 350 SHOWN

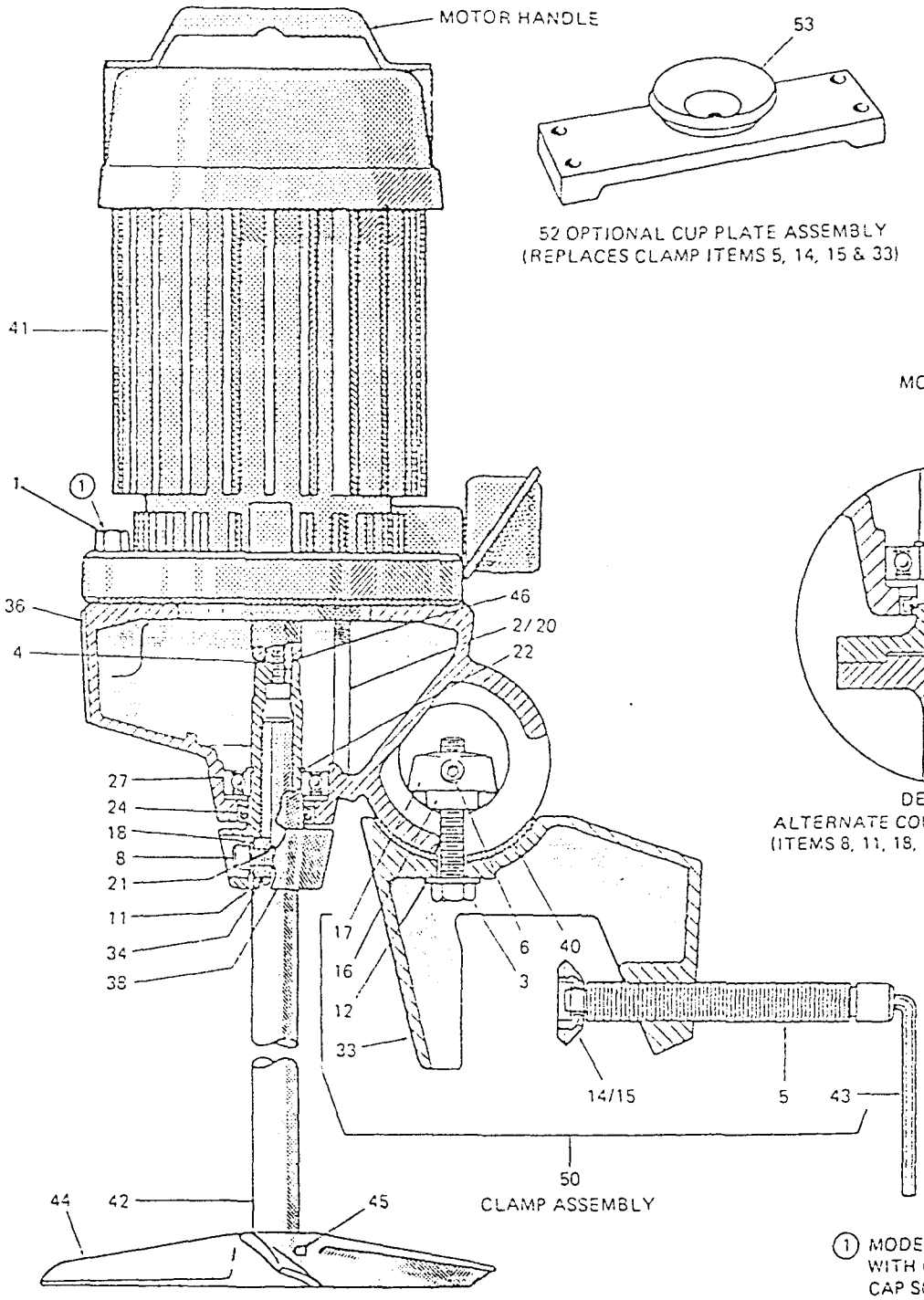

52 OPTIONAL CUP PLATE ASSEMBLY
(REPLACES CLAMP ITEMS 5, 14, 15 & 33)

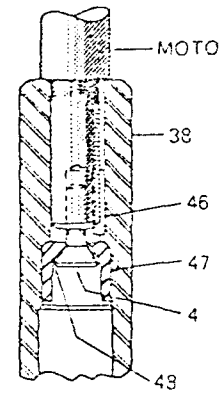

MOTOR AND DRIVE SHAFT ASSEMBLY
MODELS XD 30 THRU 117 ONLY

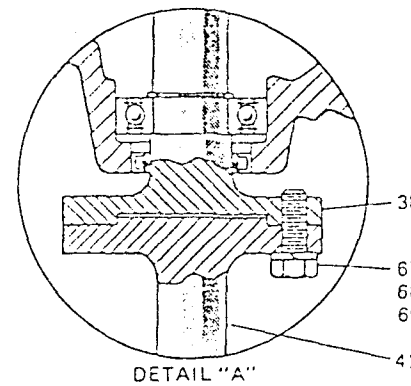

DETAIL "A"
ALTERNATE COUPLING CONSTRUCTION
(ITEMS 8, 11, 18, 21 & 34 NOT FURNISHED)

WHEN ORDERING PARTS SPECIFY MACHINE SERIAL NO., ITEM NO. & DWG. NO.

(1) MODELS XD 30 THRU 117 NOT FURNISHED WITH CAST MOTOR END BELL. TWO ITEM CAP SCREWS & BRASS WASHERS (20) ARE LOCATED ON UNDERSIDE OF HOUSING.

ITEM NO.	PART NAME	REQUIRED
1	HEX HEAD CAP SCREW } XD-174 &	2
2	HEX HEAD CAP SCREW } (350 Only)	2
2	HEX HEAD CAP SCREW XD 30-117 Only	4
3	KING BOLT	1
4	SHAFT SCREW (XD 174–350 only)	1
4	SHAFT SCREW & LOCKWASHER XD 30–117 only	1
5	CLAMP SCREW	1
6	WEDGE SCREW	1
8	CHUCK SCREW	1
11	LIMIT PIN	1
12	PLAIN WASHER	1
14	RETAINING RING	1
15	CUP WASHER	1
16	WEDGE BOTTOM	1
17	WEDGE TOP	1
18	CHUCK WASHER	1
20	WASHER (XD 30-117 Only)	4
20	WASHER (XD 174-350 Only)	2

ITEM NO.	PART NAME	REQUIRED
21	SNAP RING	1
22	RETAINING RING, EXTERNAL	1
24	OIL SEAL	1
27	BALL BEARING	1
33	CLAMP	1
34	CHUCK GRIP	1
35	MOTOR HANDLE	1
36	HOUSING	1
38	DRIVE SHAFT	1
40	VIBRATION PAD	1
41	MOTOR	1
42	MIXER SHAFT	1
43	HEX KEY WRENCH	1
44	IMPELLER	Per Order
45	SET SCREW	Per Order
46	MOTOR SHAFT KEY	1
47	WASHER (XD 30-117 Only)	1
48	LOCKWASHER (XD 30-117 Only)	1
67	HEX HEAD CAP SCREW	4
68	LOCKWASHER	4
69	HEX NUT (XD 30-43 Only)	4

When ordering parts, specify item number, machine model number

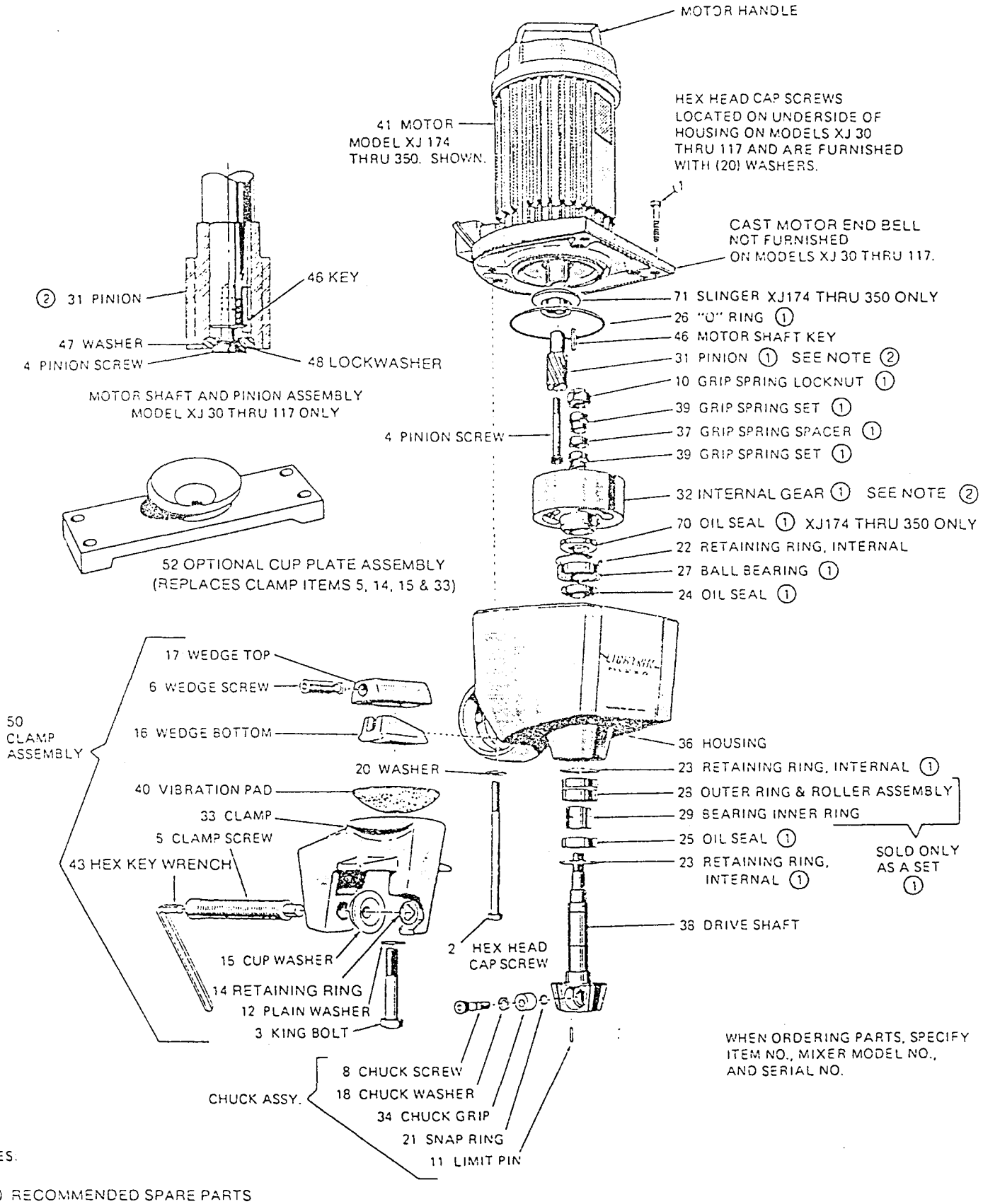

NOTES.

(1) RECOMMENDED SPARE PARTS

(2) GEAR & PINION SOLD IN SETS ONLY. HOWEVER PINION (31) IS AVAILABLE AS AN INDIVIDUAL ITEM WITHOUT MECHANICAL GUARANTEE. INTERNAL GEAR (32) NOT AVAILABLE AS INDIVIDUAL ITEM.

EXPLODED VIEW OF GEAR DRIVE MIXER XJ SERIES

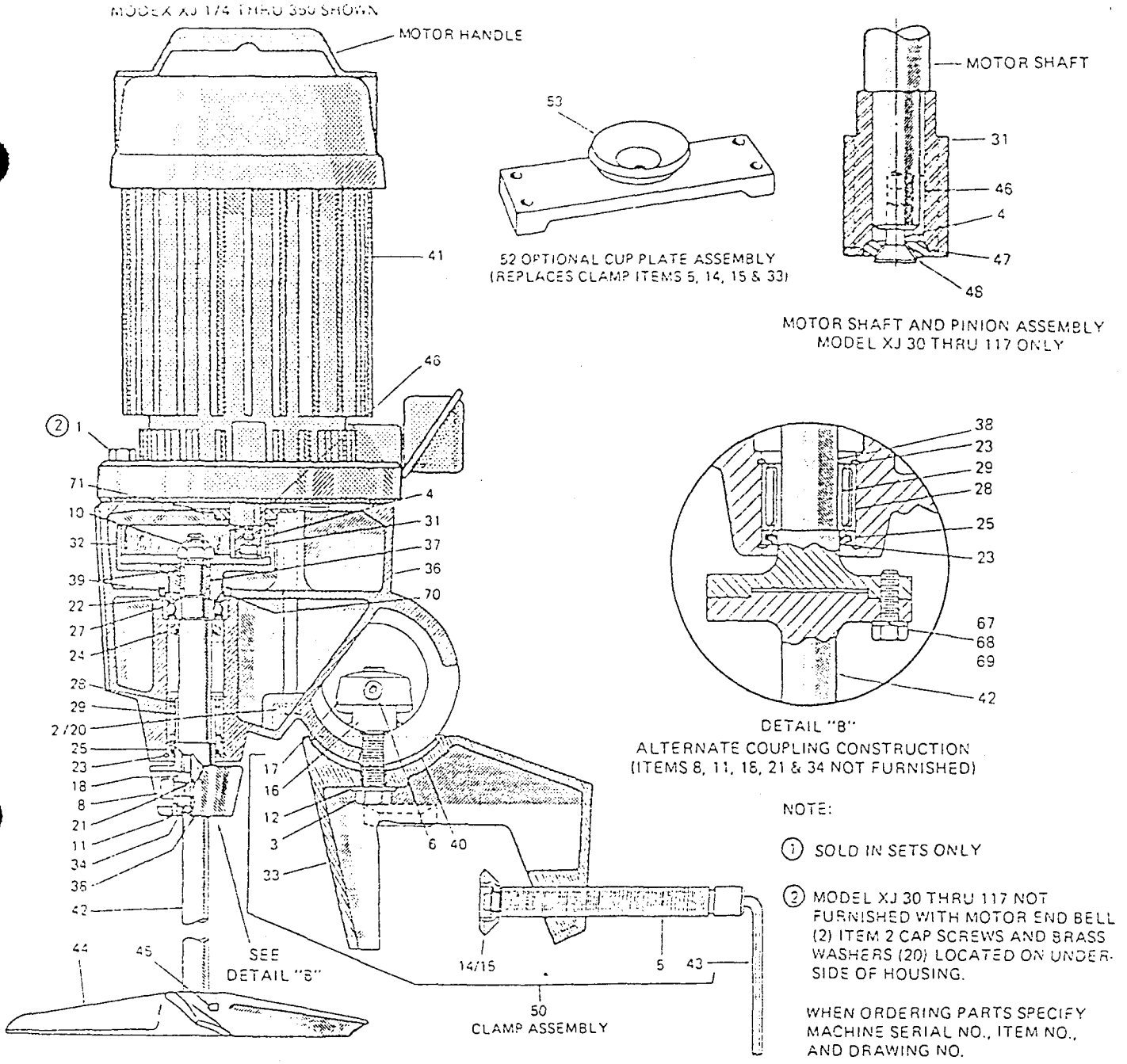

NOTE:

(1) SOLD IN SETS ONLY

(2) MODEL XJ 30 THRU 117 NOT FURNISHED WITH MOTOR END BELL (2) ITEM 2 CAP SCREWS AND BRASS WASHERS (20) LOCATED ON UNDERSIDE OF HOUSING.

WHEN ORDERING PARTS SPECIFY MACHINE SERIAL NO., ITEM NO., AND DRAWING NO.

ITEM NO.	PART NAME	REQUIRED	ITEM NO.	PART NAME	REQUIRED
1	HEX HEAD CAP SCREW (XJ 174 thru 350 only)	2	28	OUTER RING & ROLLER ASSEMBLY (SOLD ONLY AS A SET)	1
2	HEX HEAD CAP SCREW (XJ 174 thru 350 only)	2	29	BEARING INNER RING (SOLD ONLY AS A SET)	1
2	HEX HEAD CAP SCREW (XJ 30-117 only)	4	30	GEAR/PINION SETS (SOLD IN SETS ONLY)	1
3	KING BOLT	1	31	PINION (SOLD IN SETS ONLY)	1
4	PINION CAP SCREW (XJ 174-350)	1	32	INTERNAL GEAR (SOLD IN SETS ONLY)	1
4	PINION SCREW (XJ 30-117 only)	1	33	CLAMP	1
5	CLAMP SCREW	1	34	CHUCK GRIP	1
6	WEDGE SCREW	1	35	MOTOR HANDLE	1
8	CHUCK SCREW	1	36	HOUSING	1
10	GRIP SPRING LOCKNUT	1	37	GRIP SPRING SPACER	1
11	LIMIT PIN	1	38	DRIVE SHAFT	1
12	PLAIN WASHER	1	39	GRIP SPRING SET	2
14	RETAINING RING	1	40	VIBRATION PAD	1
15	CUP WASHER	1	41	MOTOR	1
16	WEDGE BOTTOM	1	42	MIXER SHAFT	1
17	WEDGE TOP	1	43	HEX KEY WRENCH	1
18	CHUCK WASHER	1	44	IMPELLER	Per Order
20	WASHER (XJ 30-117)	4	45	SET SCREW	Per Order
20	WASHER (XJ 174-350)	2	46	MOTOR SHAFT KEY	1
21	SNAP RING	1	47	WASHER (XJ 30-117 only)	1
22	RETAINING RING, INTERNAL	1	48	LOCKWASHER (XJ 130-117 Only)	1
23	RETAINING RING, INTERNAL	2	67	HEX HEAD CAP SCREW	4
24	OIL SEAL	1	68	LOCKWASHER	4
25	OIL SEAL	1	69	HEX NUT (XJ 30-117 only)	4
26	"O" RING	1	70	OIL SEAL (XJ 174 thru 350 only)	1
27	BALL BEARING	1	71	SLINGER (XJ 174 thru 350 only)	1

TABLE 4 RECOMMENDED TIGHTENING TORQUES FOR GRIP SPRING LOCKNUT

MODEL	XJ 30	XJ 43	XJ 65	XJ 87 XJ 117	XJ 174	XJ 230 XJ 350
Tightening Torque in Foot-Pounds	20	20	50	50	125	125

The Lightnin and HEI Guarantee

Lightnin guarantees that in the case of a failure of any mixer in this manual, which you feel is our responsibility, we will repair or replace it to your satisfaction or we will refund the purchase price. This guarantee applies for the first full year you use your mixer or for 18 months after we ship it, whichever comes first.

Portable mixers were the very first Lightnin products back in 1923. Lightnin still occasionally discover an original model going strong after 50 years' service or more.

Every day, Lightnin Mixers operate continuously around the clock after 20 years or more. But that's how Lightnin & HEI builds them. For years and years of non-stop mixing.

LIGHTNIN
221 ROCHESTER ST.
P. O. BOX 190
AVON, NY 14414
716-226-6136

HEI
HOFFLAND ENVIRONMENTAL, INC.
303 SILVER SPRING RD.
CONROE, TX 77303
409-856-4515

CHEM-TAINER INDUSTRIES, INC.

MOLDED PLASTIC TANKS AND CONTAINERS CATALOG 1990

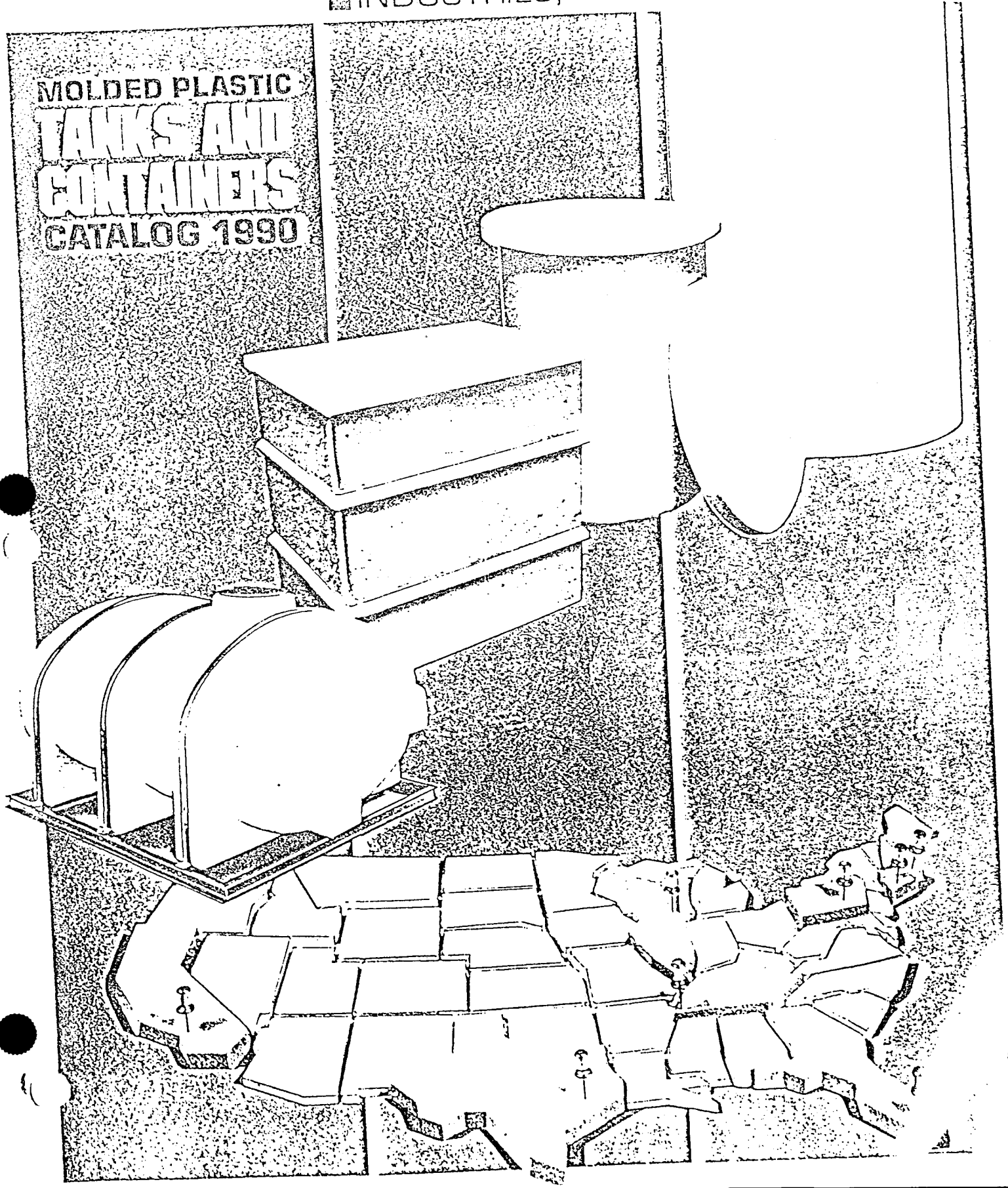

CHEM-TAINER INDUSTRIES, INC.

is a leader in the manufacture of industrial storage and processing tanks, material handling containers and custom moldings. By virtue of our nationwide network of manufacturing facilities, our huge selection of vessels and our wide range of materials, Chem-tainer provides the solution to your storage and handling problems.

All our plastic tanks are one piece molded, seamless and light weight. These tanks offer corrosion resistance, versatility in both design and application, durability and economy.

Chem-tainer Industries has a factory near you. Nine manufacturing facilities throughout the United States. Our locations in New York, Rhode Island, Pennsylvania, Illinois, Florida, Texas, California and Tennessee assure faster deliveries and lower shipping costs.

IMPORTANT
Before using your tank

(1) Fill tank with water prior to use to prevent material loss through unsecured fittings, shipping damage or manufacturing defects. (2) Use only with compatible chemicals—refer to chart on pages 24-25. (3) Use plastic tanks for atmospheric storage of chemicals, never for vacuum or pressure applications. (4) Support bottom of the tank firmly and completely. (5) Support sides of plastic rectangular tanks that have a depth greater than 18". However, specific applications must be considered: Smaller tanks with contents that have higher specific gravity and/or high temperatures must be supported. (6) Do not mount heavy equipment on tank sides. (7) Do not allow weight on tank fittings, support pipes and valves. (8) Use expansion joints to prevent damage to fittings from differential expansion and contraction of piping and tank. (9) Protect plastic tanks from impact, especially at temperatures below 40°F.

MATERIAL SELECTION

Polyethylene—A high quality, chemically resistant plastic which is translucent with high stress-crack and impact resistance. The thermoplastic polyethylene processed by Chem-tainer Industries is available in linear low, medium and high density. In general, linear low density exhibits properties that are ideal for applications that are exposed to lower temperatures and/or high impact. High density polyethylene has greater structural rigidity and can be exposed to higher temperatures. Medium density has properties of both the low and high density polyethylene. Unlike thermo set polyethylene (cross-linked), our linear polyethylene is weldable; thus allowing for greater flexibility when designing modifications to our standard tanks. Maximum service temperature for polyethylene is 160°F. Consult chemical resistant chart for suitability.

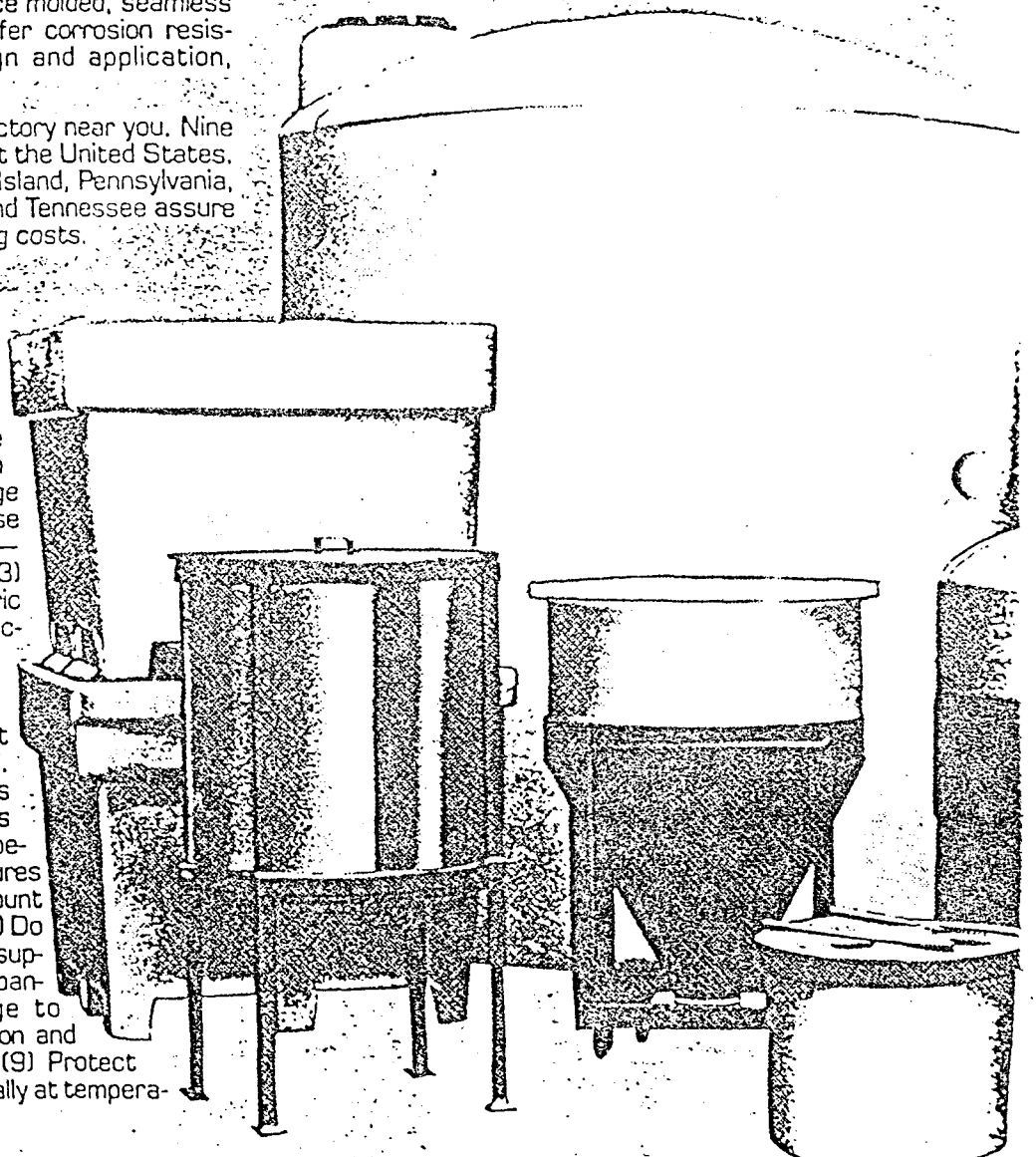

Polypropylene—A rigid plastic that has a higher temperature limit than polyethylene. It offers good chemical resistance and has a high resistance to stress-cracking. Polypropylene is not recommended for applications in sub-freezing temperature or where high impact strength is needed. A rough, irregular interior surface is a common characteristic of molded polypropylene.

Cross-Linked Polyethylene—High density cross-linked polyethylene has excellent low temperature impact and environmental stress-crack resistance. This polyethylene is a thermoset thus does not permit the utilization of welded tank connections. Cross-linked polyethylene does not have USDA or FDA approval for storage or processing of edibles.

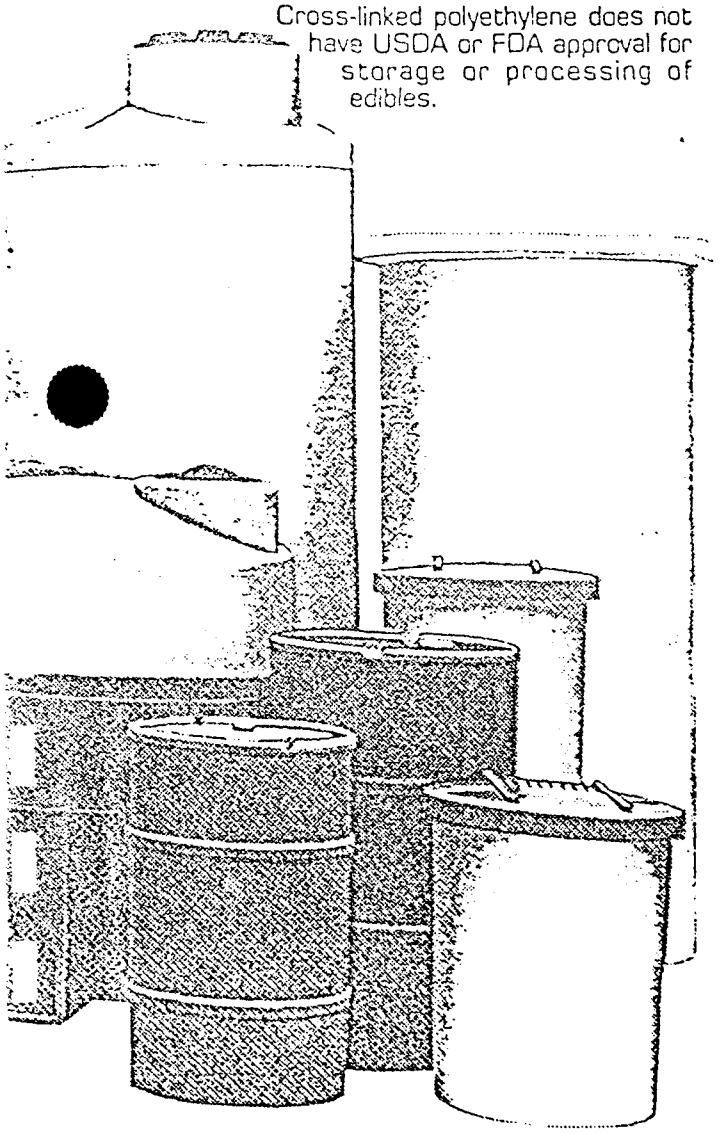

NEW FEATURES AND PRODUCTS

Look for the many new products, sizes and features throughout this catalog. All are highlighted (▶) for your convenience.

SOME OPTIONS AVAILABLE:

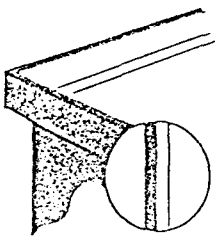

(1) (2)

Tank Flange Styles
(1) Standard style is designed to give added strength and to make the best seal possible with our tank covers.
(2) Optional style is designed to facilitate the use of certain equipment with our tanks.

Color
All our plastic tanks and containers are available in any of our 16 stock colors. Standard is a natural, unpigmented resin which in linear polyethylene is FDA approved.

Color Coding
Our unique molding process permits us to mold a color on the outside of the container, such as red, and a natural FDA approved material on the inside thus allowing product purity while identifying the product from the outside by use of a color code system.

Custom Moldings
If you do not see a standard size from our extensive list that meets your specifications, we can economically tool up and mold the custom size tanks you require. Consult the sales office for full details.

Custom Fabrications
By utilizing our standard molded tanks, we can customize a tank to meet your specific requirements. Whether it is custom placement of fittings, installing baffles and overflows or altering the dimensions of a tank, we can economically fabricate to your specifications.

CONTENTS

Tanks & Containers		Lightweight Cylindrical	15
Cylindrical	2	Drum Liners	15
Bulk Storage	3	Tapered Cylindrical	16
Horizontal Bulk Storage	4	Brine	17
Conical Bottom Bulk Storage	5	FRP Encased Cylindrical	17
Containment	5	Transport	18
Cross-linked Bulk Storage	6	Poly Cone Bottom/Stand	18
Cross-linked Cylindrical	6	Mini Bulk	18
Double Wall Storage/ Containment	7	Bulk Fork Lift	19
		Stackable Ribbed	19
Pickup Truck Tanks	7	Super Lug	20
Cylindrical Cone Bottom	8	Tote Box	20
Horizontal Storage	9	Utility Bin	20
Portable Horizontal	9	Large/Small Dispensing	21
Rectangular	10-12	Insulated	22
FRP Encased Rectangular	10-12	Tank Heating System	22
Acid Neutralization	13	Accessories/Fittings	22-23
Internal Flange Liners	14	Chemical Resistance Data	24-25
Photo Lab	14		
Shipping Drums	14	Ordering	Back Cover

CHEMICAL RESISTANCE DATA

CHEM-TAINER INDUSTRIES uses only the highest quality raw materials available. These raw materials have outstanding resistance to both physical and chemical attack. The following chart should be used as a guide for evaluating the suitability of our products with the chemical agent to be used. Special consideration must be given to the expected service temperature, stress involved in the application and length and type of exposure (i.e. intermittent or continuous). Contact our technical staff for information on chemicals not listed or when uncertain conditions exist.

REAGENT	CONC.	LDPE 70°	LDPE 140°	HDPE 70°	HDPE 140°	PP 70°	PP 140°	XLPE 70°	XLPE 140°
Acetone		B	C	B	C	A	A	C	C
Acetaldehyde*	100%	B	C	B	C	A	B	B	C
Acetic Acid*	10%	A	A	A	A	A	A	A	A
Acetic Acid*	60%	A	B	A	B	A	A	A	A
Acetic Anhydride*		C	C	C	C	–	–	C	C
Air		A	A	A	A	A	A	A	A
Aluminum Chloride	all conc	A	A	A	A	A	A	A	A
Aluminum Fluoride	all conc	A	A	A	A	A	A	A	A
Aluminum Sulphate	all conc	A	A	A	A	A	A	A	A
Alums	all types	A	A	A	A	A	A	A	A
Ammonia	100% dry gas	A	A	A	A	A	A	A	A
Ammonium Carbonate		A	A	A	A	A	A	A	A
Ammonium Chloride	sat'd	A	A	A	A	A	A	A	A
Ammonium Fluoride	sat'd	A	A	A	A	A	A	A	A
Ammonium Hydroxide	10%	A	A	A	A	A	A	A	A
Ammonium Hydroxide	28%	A	A	A	A	A	A	A	A
Ammonium Nitrate	sat'd	A	A	A	A	A	A	A	A
Ammonium Persulphate	sat'd	A	A	A	A	A	A	A	A
Ammonium Sulphate	sat'd	A	A	A	A	A	A	A	A
Ammonium Metaphosphate	sat'd	A	A	A	A	A	A	A	A
Ammonium Sulfide	sat'd	A	A	A	A	A	A	A	A
Amyl Acetate*•	100%	C	C	C	C	B	C	C	C
Amyl Alcohol*•	100%	A	A	A	A	A	B	A	A
Amyl Chloride•	100%	C	C	C	C	C	C	C	C
Aniline*•	100%	A	C	C	B	A	A	A	C
Aqua Regia†		C	C	C	C	C	C	C	C
Arsenic Acid	all conc	A	A	A	A	A	A	A	A
Aromatic Hydrocarbons*#		C	C	C	C	–	–	C	C
Ascorbic Acid	10%	A	A	A	A	–	–	A	A
Barium Carbonate	sat'd	A	A	A	A	A	A	A	A
Barium Chloride	sat'd	A	A	A	A	A	A	A	A
Barium Hydroxide		A	A	A	A	A	A	A	A
Barium Sulphate	sat'd	A	A	A	A	A	A	A	A
Barium Sulphide	sat'd	A	A	A	A	A	A	A	A
Beer		A	A	A	A	A	A	C	C
Benzene*•		C	C	C	C	B	C	C	C
Benzoic Acid	all conc	A	A	A	A	A	A	A	A
Bismuth Carbonate	sat'd	A	A	A	A	A	A	A	A
Bleach Lye	10%	A	A	A	A	A	A	A	A
Borax	sat'd	A	A	A	A	A	A	A	A
Boric Acid	all conc	A	A	A	A	A	A	A	A
Boron Trifluoride		A	A	A	A	–	–	A	A
Brine		A	A	A	A	A	A	A	A
Bromine†	liquid	C	C	C	C	C	C	C	C
Bromine Water•	sat'd	C	C	C	C	C	–	C	C
Butanediol*	10%	A	A	A	A	A	A	A	A
Butanediol*	60%	A	A	A	A	A	A	A	A
Butanediol*	100%	A	A	A	A	A	A	A	A
Butter*		A	A	A	A	A	A	C	C
n-Butyl Acetate*•	100%	B	C	A	B	C	C	A	C
n-Butyl Alcohol	100%	A	A	A	A	A	–	A	A
Butyric Acid•	conc	C	C	C	C	–	–	–	–
Calcium Bisulphide		A	A	A	A	A	A	A	A
Calcium Carbonate	sat'd	A	A	A	A	A	A	A	A
Calcium Chlorate	sat'd	A	A	A	A	A	A	A	A
Calcium Chloride	sat'd	A	A	A	A	A	A	A	A
Calcium Hydroxide	conc	A	A	A	A	A	A	A	A
Calcium Hypochlorite	bleach sol'n	A	A	A	A	A	B	A	A
Calcium Nitrate	50%	A	A	A	A	A	A	A	A
Calcium Oxide	sat'd	A	A	A	A	–	–	A	A
Calcium Sulphate		A	A	A	A	A	A	A	A
Camphor Oil*•		C	C	B	C	C	C	C	C
Carbon Dioxide	all conc	A	A	A	A	A	A	A	A
Carbon Disulphide		C	C	C	C	B	C	C	C
Carbon Monoxide		A	A	A	A	A	A	A	A
Carbon Tetrachloride•		C	C	B	C	C	C	C	C
Carbonic Acid		A	A	A	A	A	A	A	A
Caster Oil*	conc	A	A	A	A	A	A	A	A
Chlorine†	100% dry gas	B	C	C	C	C	C	B	C
Chlorine Liquid†		C	C	C	C	C	C	C	A
Chlorine Water†	2% sat'd sol'n	A	A	A	A	A	B	A	A

REAGENT	CONC.	LDPE 70°	LDPE 140°	HDPE 70°	HDPE 140°	PP 70°	PP 140°	XLPE 70°	XLPE 140°
Chlorobenzene*•		C	C	C	C	C	C	C	C
Chloroform*•		C	C	B	C	C	C	C	C
Chlorosulphonic Acid	100%	C	C	C	C	C	C	C	C
Chrome Alum	sat'd	A	A	A	A	A	A	A	A
Chromic Acid	80%	–	–	–	–	A	–	–	–
Chromic Acid	50%	A	B	A	B	A	A	A	B
Chromic Acid	10%	A	A	A	A	A	A	A	A
Cider*		A	A	A	A	A	A	C	C
Citric Acid*	sat'd	A	A	A	A	A	A	A	A
Coconut Oil Alcohols*		A	A	A	A	A	A	A	A
Coffee		A	A	A	A	A	A	A	A
Cola Concentrates*		A	A	A	A	A	A	A	A
Copper Chloride	sat'd	A	A	A	A	A	A	A	A
Copper Cyanide	sat'd	A	A	A	A	A	A	A	A
Copper Fluoride	2%	A	A	A	A	A	A	A	A
Copper Nitrate	sat'd	A	A	A	A	A	A	A	A
Copper Sulphate	sat'd	A	A	A	A	A	A	A	A
Corn Oil*		A	A	A	A	A	A	A	A
Cottonseed Oil*		A	A	A	A	A	A	A	A
Cuprous Chloride	sat'd	A	A	A	A	A	A	A	A
Detergents, synthetic*		A	A	A	A	A	A	A	A
Developers, photographic		A	A	A	A	A	A	A	A
Dextrin	sat'd	A	A	A	A	A	A	A	A
Dextrose	sat'd	A	A	A	A	A	A	A	A
Diazo Salts		A	A	A	A	A	A	A	A
Dibutylphthalate*		B	B	B	B	A	B	B	B
Dichlorobenzene*•		C	C	C	C	–	–	C	C
Diethyl Kentone*•		B	C	B	B	–	–	B	C
Diethylene Glycol*		A	A	A	A	A	A	A	A
Diglycolic Acid*		A	A	A	A	–	–	A	A
Dimethylamine		C	C	C	C	–	–	C	C
Disodium Phosphate		A	A	B	A	A	A	A	A
Emulsions, photographic*		A	A	A	A	A	A	A	A
Ethyl Acetate*•	100%	B	C	B	C	B	B	B	C
Ethyl Alcohol*	100%	A	A	A	A	A	A	A	A
Ethyl Alcohol*	35%	A	A	A	A	A	A	A	A
Ethyl Benzene*•		C	C	C	C	C	C	C	C
Ethyl Chloride•		C	C	C	C	C	C	C	C
Ethyl Ether•		C	C	C	C	B	C	C	C
Ethylene Chloride*•		C	C	C	C	C	C	C	C
Ethylene Glycol*		A	A	A	A	A	A	A	A
Fatty Acids*		A	A	A	A	A	A	A	A
Ferric Chloride	sat'd	A	A	A	A	A	A	A	A
Ferric Nitrate	sat'd	A	A	A	A	A	A	A	A
Ferrous Chloride	sat'd	A	A	A	A	A	A	A	A
Ferrous Sulphate		A	A	A	A	A	A	A	A
Fish Solubles*		A	A	A	A	A	A	A	A
Fluoboric Acid		A	A	A	A	A	A	A	A
Fluosilicic Acid	conc	A	B	A	B	A	B	A	A
Fluosilicic Acid	32%	A	A	A	A	A	A	A	A
Formic Acid	all conc	A	A	A	A	A	A	A	A
Fructose	sat'd	A	A	A	A	A	A	A	A
Fruit Pulp*		A	A	A	A	A	A	A	A
Furfural•	100%	C	C	B	C	C	C	C	C
Furfuryl Alcohol*•		C	C	B	C	C	C	C	C
Gallic Acid*	sat'd	A	A	A	A	A	A	A	A
Gasoline*•		C	C	B	B	B	C	A	C
Glucose		A	A	A	A	A	A	A	A
Glycerine*		A	A	A	A	A	A	A	A
Glycol*		A	A	A	A	A	A	A	A
Glycolic Acid*	30%	A	A	A	A	A	A	A	A
Grape Sugar	sat. aq.	A	A	A	A	A	A	A	A
n-Heptane*•		C	C	B	B	–	–	A	C
Hexachlorobenzene		A	A	A	–	–	–	A	A
Hexanol, tertiary*		A	A	A	A	–	–	A	A
Hydrobromic Acid	50%	A	A	A	A	A	A	A	A
Hydrochloric Acid	all conc	A	A	A	A	A	A	A	A
Hydrocyanic Acid	sat'd	A	A	A	A	–	–	A	A
Hydrofluoric Acid*	60%	A	A	A	A	A	A	A	A
Hydrogen	100%	A	A	A	A	A	A	A	A
Hydrogen Chloride	dry gas	A	A	A	A	A	A	A	A
Hydrogen Peroxide	30%	A	A	A	A	A	–	A	A
Hydrogen Peroxide	10%	A	A	A	A	A	B	A	A
Hydrogen Sulphide		A	A	A	A	A	A	A	A
Hydroquinone		A	A	A	A	A	A	A	A

*Contact Sales Office regarding chemical concentration and temperature ranges.

* Stress-crack agent—Certain surface-active materials, although they have no chemical effect on polyethylene, can accelerate the cracking of polyethylene when it is under stress. Although our tanks are generally stress free, caution should be used when large tanks are unsupported and welded fittings are used.

* Plasticizer—Certain types of chemicals are absorbed to varying degrees by polyethylene causing swelling, weight gain, softening and some loss of yield strength. These plasticizing materials cause no actual chemical degradation of the resin. Some of these chemicals have a strong plasticizing effect (e.g. aromatic hydrocarbons benzene), whereas others have weaker effects (e.g. gasoline). Certain plasticizers are sufficiently volatile that if they are removed from contact with the polyethylene, the part will "dry" out and return to its original condition with no loss of properties.

† Oxidizers—Oxidizers are the only group of materials capable of chemically degrading polyethylene. The effects on the polyethylene may be gradual even for strong oxidizers and short-term effects may not be measurable. However, if continuous, long-term exposure is intended, the chemical effects should be checked.

CODE
A Resistant, no indication that serviceability would be impaired.
B Variable resistance, depending on conditions of use.
C Unresistant, not recommended for service applications under any conditions.
— Information not yet available.

REAGENT	CONC.	LDPE 70°	LDPE 140°	HDPE 70°	HDPE 140°	PP 70°	PP 140°	XLPE 70°	XLPE 140°
Hypochlorous Acid	conc	A	A	A	A	A	A	A	A
Ink*		A	A	A	A	A	A	A	A
Iodine†	in KI soln	B	C	B	—	—	—	B	C
Isopropyl Alcohol	100%	—	—	—	—	A	A	A	A
Lead Acetate	sat'd	A	A	A	A	A	A	A	A
Lead Nitrate		A	A	A	A	—	—	A	A
Lactic Acid*	20%	A	A	A	A	A	A	A	A
Linseed Oil*	100%	B	C	B	C	A	A	A	C
Magnesium Carbonate	sat'd	A	A	A	A	A	A	A	A
Magnesium Chloride	sat'd	A	A	A	A	A	A	A	A
Magnesium Hydroxide	sat'd	A	A	A	A	A	A	A	A
Magnesium Nitrate	sat'd	A	A	A	A	A	A	A	A
Magnesium Sulphate	sat'd	A	A	A	A	A	A	A	A
Mercuric Chloride	40%	A	A	A	A	A	A	A	A
Mercuric Cyanide	sat'd	A	A	A	A	A	A	A	A
Mercury		A	A	A	A	A	A	A	A
Methyl Alcohol*	100%	A	A	A	A	A	A	A	A
Methylethyl Ketone**	100%	B	C	B	C	A	B	B	C
Methylene Chloride**	100%	C	C	B	B	B	—	C	C
Milk		A	A	A	A	A	A	C	C
Mineral Oils*		B	C	B	C	A	B	A	C
Molasses		A	A	A	A	A	A	A	A
Naphtha**		B	C	B	C	—	—	B	C
Naphthalene**		C	C	B	—	A	A	C	C
Nickel Chloride	conc	A	A	A	A	A	A	A	A
Nickel Nitrate	sat'd	A	A	A	A	A	A	A	A
Nickel Sulphate	conc	A	A	A	A	A	A	A	A
Nicotine*	dilute	A	A	A	A	A	A	A	A
Nitric Acid	0-30%	A	A	A	A	C	C	A	A
Nitric Acid†	30-50%	A	B	A	B	C	C	A	B
Nitric Acid†	70%	A	B	A	B	C	C	A	B
Nitric Acid†	95-98%	C	C	C	C	C	C	C	C
Nitrobenzene**	100%	C	C	C	C	A	A	C	C
n-Octane		A	A	A	A	—	—	A	A
Oleic Acid		B	C	B	C	A	B	A	C
Oxalic Acid*	sat'd	A	A	A	A	A	B	A	A
Perchlorcethylene*		C	C	C	C	—	—	C	C
Phosphoric Acid	95%	A	B	A	A	A	A	A	B
Photographic Solutions		A	A	A	A	A	A	A	A
Plating Solutions*									
Brass		A	A	A	A	A	A	A	A
Cadmium		A	A	A	A	A	A	A	A
Chromium		A	A	A	A	A	A	A	A
Copper		A	A	A	A	A	A	A	A
Gold		A	A	A	A	A	A	A	A
Indium		A	A	A	A	A	A	A	A
Lead		A	A	A	A	A	A	A	A
Nickel		A	A	A	A	A	A	A	A
Rhodium		A	A	A	A	A	A	A	A
Silver		A	A	A	A	A	A	A	A
Tin		A	A	A	A	A	A	A	A
Zinc		A	A	A	A	A	A	A	A
Potassium Bicarbonate	sat'd	A	A	A	A	A	A	A	A
Potassium Bromide	sat'd	A	A	A	A	A	A	A	A
Potassium Bromate	10%	A	A	A	A	A	A	A	A
Potassium Carbonate		A	A	A	A	A	A	A	A
Potassium Chlorate	sat'd	A	A	A	A	A	A	A	A
Potassium Chloride	sat'd	A	A	A	A	A	A	A	A
Potassium Chromate	40%	A	A	A	A	A	A	A	A
Potassium Cyanide	sat'd	A	A	A	A	A	A	A	A
Potassium Dichromate	40%	A	A	A	A	A	A	A	A
Potassium Ferri/Ferro Cyanide	sat'd	A	A	A	A	A	A	A	A
Potassium Fluoride		A	A	A	A	A	A	A	A
Potassium Hydroxide	conc	A	A	A	A	A	A	A	A
Potassium Nitrate	sat'd	A	A	A	A	A	A	A	A
Potassium Perborate	sat'd	A	A	A	A	A	A	A	A
Potassium Perchlorate	10%	A	A	A	A	A	A	A	A
Potassium Permanganate	20%	A	A	A	A	A	A	A	A
Potassium Persulphate	sat'd	A	A	A	A	—	—	A	A
Potassium Sulphate	conc	A	A	A	A	A	A	A	A
Potassium Sulphide	conc	A	A	A	A	A	A	A	A
Potassium Sulphite	conc	A	A	A	A	A	A	A	A

REAGENT	CONC.	LDPE 70°	LDPE 140°	HDPE 70°	HDPE 140°	PP 70°	PP 140°	XLPE 70°	XLPE 140°
Propargyl Alcohol*		A	A	A	A	—	—	A	A
n-Propyl Alcohol*		A	A	A	A	A	A	A	A
Propylene Dichloride**	100%	C	C	C	—	C	C	C	C
Propylene Glycol*		A	A	A	A	—	—	A	A
Pyridine*		A	—	A	—	A	—	A	C
Resorcinol	sat'd	A	A	A	A	—	—	A	A
Salicylic Acid	sat'd	A	A	A	A	—	—	A	A
Sea Water		A	A	A	A	A	A	A	A
Selenic Acid		A	A	A	A	—	—	A	A
Shortening*		A	A	A	A	A	A	A	A
Silver Nitrate Solution		A	A	A	A	A	A	A	A
Soap Solution*	any con	A	A	A	A	A	A	A	A
Sodium Acetate	sat'd	A	A	A	A	A	A	A	A
Sodium Benzoate	35%	A	A	A	A	A	A	A	A
Sodium Bicarbonate	sat'd	A	A	A	A	A	A	A	A
Sodium Bisulphate	sat'd	A	A	A	A	A	A	A	A
Sodium Bisulphite	sat'd	A	A	A	A	A	A	A	A
Sodium Borate		A	A	A	A	A	A	A	A
Sodium Bromide	dilute	A	A	A	A	A	A	A	A
Sodium Carbonate	conc	A	A	A	A	A	A	A	A
Sodium Chlorate	sat'd	A	A	A	A	A	A	A	A
Sodium Chloride	sat'd	A	A	A	A	A	A	A	A
Sodium Cyanide		A	A	A	A	A	A	A	A
Sodium Dichromate	sat'd	A	A	A	A	A	A	A	A
Sodium Ferri/Ferro Cyanide	sat'd	A	A	A	A	A	A	A	A
Sodium Fluoride	sat'd	A	A	A	A	A	A	A	A
Sodium Hydroxide	conc	A	A	A	A	A	A	A	A
Sodium Hypochlorite		A	A	A	A	A	B	A	A
Sodium Nitrate		A	A	A	A	A	A	A	A
Sodium Sulphate		A	A	A	A	A	A	A	A
Sodium Sulphide	sat'd	A	A	A	A	A	A	A	A
Sodium Sulphite	sat'd	A	A	A	A	A	A	A	A
Stannic Chloride	sat'd	A	A	A	A	A	A	A	A
Stannous Chloride	sat'd	A	A	A	A	A	A	A	A
Starch Solution*	sat'd	A	A	A	A	A	A	A	A
Stearic Acid*	100%	A	A	A	A	A	A	A	A
Sulphonic Acid	0-50%	A	A	A	A	A	B	A	A
Sulphuric Acid†	70%	A	B	A	B	A	B	A	B
Sulphuric Acid†	80%	A	C	A	C	C	C	A	C
Sulphuric Acid†	96%	B	C	B	C	C	—	C	C
Sulphuric Acid†	98-conc	B	C	B	C	C	—	C	C
Sulphuric Acid†	fuming	C	C	C	C	C	C	C	C
Sulphurous Acid		A	A	A	A	A	A	A	A
Tallow*		A	B	A	—	A	A	A	B
Tannic Acid*	sat'd	A	A	A	A	A	A	A	A
Tartaric Acid		A	A	A	A	A	A	A	A
Tetrahydrofuran**		C	C	B	C	C	C	C	C
Titanium Tetrachloride*	sat'd	C	C	C	—	—	—	C	C
Toluene*		C	C	B	B	C	C	C	C
Trichlorcethylene**		C	C	C	C	C	C	C	C
Triethylene Glycol*		A	A	A	A	—	—	A	A
Trisodium Phosphate	sat'd	A	A	A	A	A	A	A	A
Turpentine*		C	C	B	B	C	C	C	C
Urea	0-30%	A	A	A	A	A	A	A	A
Urine		A	A	A	A	A	A	A	A
Vanilla Extract*		A	A	A	A	A	A	A	A
Vinegar		A	A	A	A	A	A	A	A
Water		A	A	A	A	A	A	A	A
Wetting Agents*		A	A	A	A	A	A	A	A
Whiskey*		A	A	A	A	A	A	C	C
Wines*		A	A	A	A	A	A	C	C
Xylene*		C	C	B	B	C	C	C	C
Yeast		A	A	A	A	A	A	A	A
Zinc Bromide	sat'd	A	A	A	A	—	—	A	A
Zinc Carbonate	sat'd	A	A	A	A	—	—	A	A
Zinc Chloride	sat'd	A	A	A	A	A	A	A	A
Zinc Oxide	sat'd	A	A	A	A	A	A	A	A
Zinc Stearate		A	A	A	A	—	—	A	A
Zinc Sulphate	sat'd	A	A	A	A	A	A	A	A

*Contact Sales Office regarding chemical concentrations and temperature ranges.

ORDERING

Terms: Net 30 days after credit approval.

Freight: All shipments are F.O.B. Babylon, New York; Lombard, Illinois; Houston, Texas; Los Angeles, California; Hallandale, Florida; Hummelstown, Pennsylvania or Arlington, Tennessee as available.

Instructions: Please specify model number and capacity. Be sure all options are clearly stated, particularly outlet locations.

Prices: Subject to change without notice.

Return Goods Policy: All returns must have prior authorization from the factory. Returns not carrying our authorized label will not be accepted.

WARRANTY

Chem-Tainer Industries will repair or replace items listed below and during applicable warranty period, or at Chem-Tainer's option, refund the purchase price of any product found upon inspection by Chem-Tainer to be defective in workmanship or material. This warranty is extended to the original purchaser and provided that the product is installed per Chem-Tainer's written instructions, used in a normal and appropriate manner, and used with chemicals listed as "resistant" in Chem-Tainer's catalog. All items must be returned prepaid to a Chem-Tainer factory designated by a Chem-Tainer authorized representative.

One Year—All plastic tanks and containers, steel support stands and dollies, installed fittings, with exception of SH Series Shipper which is to be inspected and tested within 10 days of delivery.

Three Year—IA and JA series closed head tanks 1100-9000 gallon capacities.

The warranty stated herein is the sole warranty of Chem-Tainer Industries and expressly disclaims any and all other warranties, expressed or implied. Chem-Tainer Industries liability is expressly limited to the remedies set forth above and be exclusive; Chem-Tainer Industries shall not be liable for incidental or consequential damages.

CHEM-TAINER INDUSTRIES, INC.

SALES AND CORPORATE OFFICES:
361 NEPTUNE AVE., N. BABYLON, N.Y. 11704 (516) 661-8300 FAX: 516-661-8209

FACTORIES: NEW YORK, PENNSYLVANIA, ILLINOIS,
RHODE ISLAND, FLORIDA, TEXAS, CALIFORNIA AND TENNESSEE

Distributed by:

APPENDIX F
PNEUMATIC SLUDGE TRANSFER PUMP

Manufacturer: Wilden Pump
22069 Van Buren Street
Grand Terrace, CA 92313
(909) 422-1730 Fax: (909) 783-3440

Supplier: Quaker Pump Company
805 West Fifth Street
Lansdale, PA 19446-2200
(215) 362-0600 Fax: (215) 362-7742
Contact: Debbie Cunningham

Model: M2-00-NE/NE/AB

WILDEN®

AIR OPERATED DOUBLE DIAPHRAGM PUMPS

M2
M2R

Engineering Operation and Maintenance

MODEL M2 METAL
MODEL M2R CHAMP
MODEL M2 FOOD PROCESSING
MODEL M2 & M2R SOLENOID-OPERATED

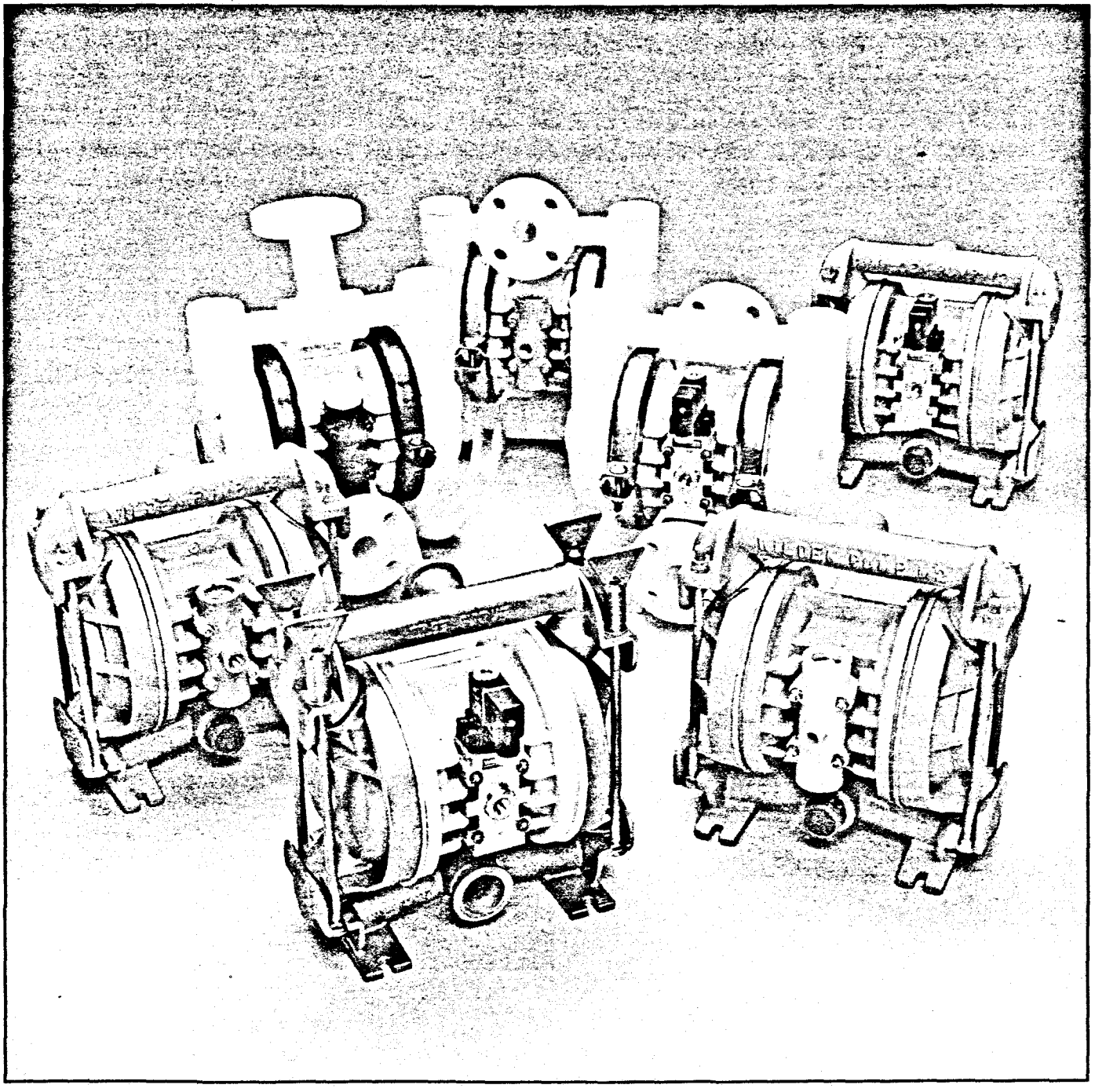

COPYRIGHT 1995 WILDEN PUMP & ENGINEERING CO.

RBG P/S-02 2/95
REPLACES 11/94

THE WILDEN PUMP — HOW IT WORKS

The Wilden diaphragm pump is an air-operated, positive displacement, self-priming pump. These drawings show flow pattern through the pump upon its initial stroke. It is assumed the pump has no fluid in it prior to its initial stroke.

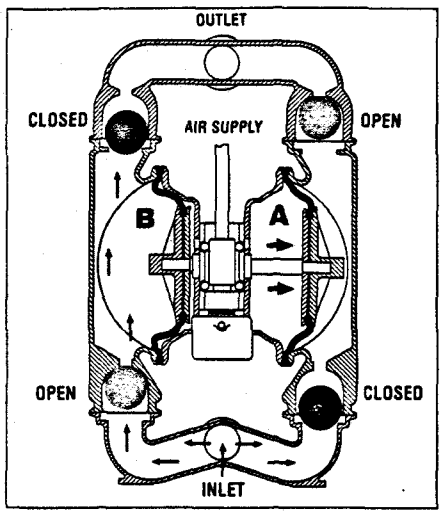

FIGURE 1 The air valve directs pressurized air to the back side of diaphragm A. The compressed air is applied directly to the liquid column separated by elastomer diaphragms. The diaphragm acts as a separation membrane between the compressed air and liquid, balancing the load and removing mechanical stress from the diaphragm which allows for millions of flex cycles. The compressed air moves the diaphragm away from the center block of the pump. The opposite diaphragm is pulled in by the shaft connected to the pressurized diaphragm. Diaphragm B is now on its suction stroke; air behind the diaphragm has been forced out to the atmosphere through the exhaust port of the pump. Diaphragm A is working against atmospheric air pressure. The movement of diaphragm B toward the center block of the pump creates a vacuum within chamber B. Atmospheric pressure forces fluid into the inlet manifold forcing the inlet valve ball off its seat. Liquid is free to move past the inlet valve ball and fill the liquid chamber.

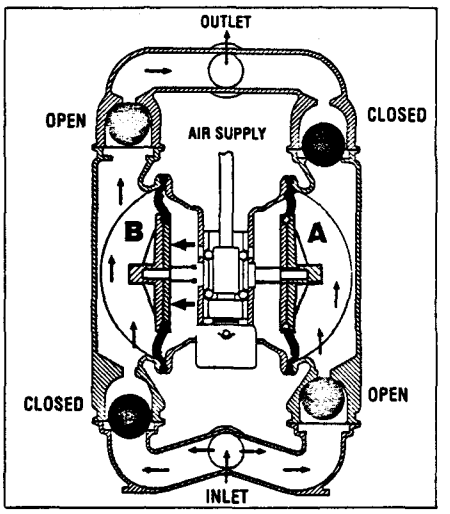

FIGURE 2 When the pressurized diaphragm, diaphragm A, reaches the limit of its discharge stroke, the air valve redirects pressurized air to the back side of diaphragm B. The pressurized air forces diaphragm B away from the center block while pulling diaphragm A to the center block. Diaphragm B is now on its discharge stroke. Diaphragm B forces the inlet valve ball onto its seat due to the hydraulic forces developed in the liquid chamber and manifold of the pump. These same hydraulic forces lift the discharge valve ball off its seat, while the opposite discharge valve ball is forced onto its seat, forcing fluid to flow through the pump discharge. The movement of diaphragm A to the center block of the pump creates a vacuum within liquid chamber A. Atmospheric pressure forces fluid into the inlet manifold of the pump. The inlet valve ball is forced off its seat allowing the fluid being pumped to fill the liquid chamber.

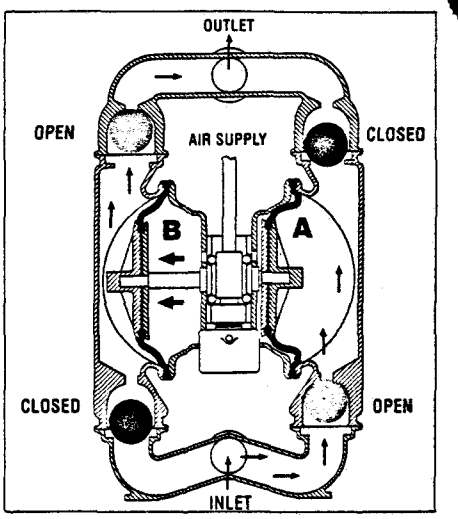

FIGURE 3 At completion of the stroke, the air valve again redirects air to the back side of diaphragm A, which starts diaphragm B on its exhaust stroke. As the pump reaches its original starting point, each diaphragm has gone through one exhaust and one discharge stroke. This constitutes one complete pumping cycle. The pump may take several cycles to completely prime depending on the conditions of the application.

WILDEN PUMP DESIGNATION SYSTEM

XX / XX / XX / XX / XX
1 2 3 4 5 6

1 MODEL (SIZE)
2 WETTED CONSTRUCTION
3 NON-WETTED CONSTRUCTION
4 DIAPHRAGMS
5 VALVE BALLS
6 VALVE SEATS (O-RINGS)

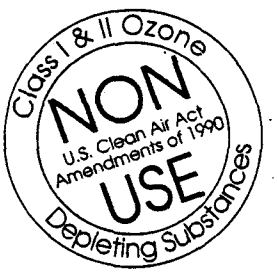

NOTE: UL-listed pumps must not exceed 50 psig air supply pressure.

Temperature Limits:

Polypropylene	**+32°F to +175°F**	**0°C to 79°C**
PVDF	**+10°F to +225°F**	**-12°C to 107°C**

CAUTION: Maximum temperature limits are based upon mechanical stress only. Certain chemicals will significantly reduce maximum safe operating temperatures. Consult engineering guide for chemical compatibility and temperature limits.

SUGGESTED INSTALLATION

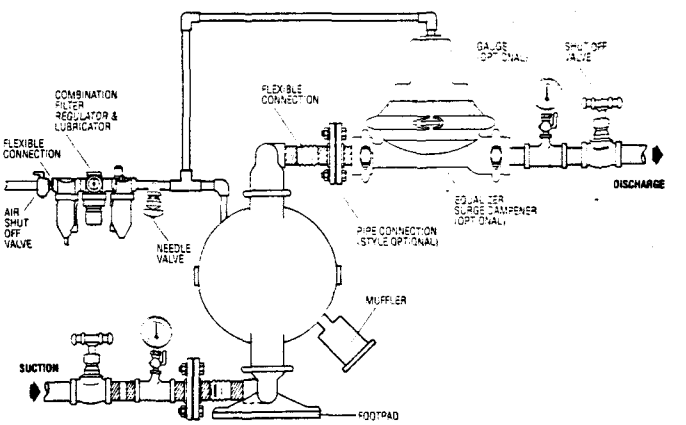

CAUTION: WEAR SAFETY GLASS. WHEN DIAPHRAGM RUPTURE OCCURS, MATERIAL BEING PUMPED MAY BE FORCED OUT AIR EXHAUST.

"Champ" series pumps are made of virgin plastic and are not UV stabilized. Direct sunlight for prolonged periods can cause deterioration of plastics.

NOTE: Pump must be lubricated. Wilden suggests an arctic 5 weight oil (ISO grade 15).

WARNING: Prevention of static sparking — If static sparking occurs, fire or explosion could result. Pump, valves, and containers must be grounded when handling flammable fluids and whenever discharge of static electricity is a hazard. To ground the Wilden "Champ," all clamp bands must be grounded to a proper grounding point.

®TEFLON IS A REGISTERED TRADEMARK OF E.I. DUPONT CORP.

TABLE OF CONTENTS

PAGE #

SECTION #1 — DIMENSIONAL DRAWINGS

A. Air-operated METAL M2 2
B. Solenoid-opreated METAL M2 2
C. Air-operated FOOD PROCESSING M2 3
D. Solenoid-operated FOOD PROCESSING M1 3
E. Air-operated CHAMP M2 (plastic construction) 4
F. Solenoid-operated CHAMP M2R (plastic construction) 4

SECTION #2 — PERFORMANCE CURVES / TECHNICAL DATA

A. METAL M2 (Rubber/TPE-fitted) 5
B. METAL M2 (Teflon-fitted) 5
C. CHAMP M2R (Rubber/TPE-fitted) 6
D. CHAMP M2R (Teflon-fitted) 6

SECTION #3 — INSTALLATION

A. Air-operated METAL M2 and CHAMP M2R 7
B. Solenoid-operated METAL M2 and CHAMP M2R 7–8
C. Solenoid-operted Quick Reference 9

SECTION #4 — SUGGESTED OPERATION AND MAINTENANCE

A. Air-operated METAL, CHAMP, and ULTRAPURE III 10
B. Solenoid-operated METAL and CHAMP 11

SECTION #5 — TROUBLESHOOTING

A. Air-operated METAL, CHAMP, and ULTRAPURE III 12
B. Solenoid-operated METAL and CHAMP 12

SECTION #6 — DIRECTIONS FOR DISASSEMBLY / REASSEMBLY

A. Air-operated and solenoid-operated METAL and CHAMP M1 13–15
B. Air valve/center section repair/maintenance air-operated METAL and CHAMP M1 16–17
C. Air-operated ULTRAPURE III 17–24
D. Air valve/center section repair/maintenance solenoid-operated METAL and CHAMP M1 . 25–26

SECTION #7 — EXPLODED VIEW / PARTS LISTING

A. Air-operated METAL M2 (Lubed and lube-free) 28–29
B. Solenoid-operated METAL M2 (Lubed and lube-free) 30–31
C. Air-operated M2R CHAMP 32–33
D. Solenoid-operated M2R CHAMP 34–35

SECTION #8 — ELASTOMER OPTIONS / TORQUE SPECIFICATIONS

..... 36

SECTION 1A

DIMENSIONAL DRAWING
MODEL M2 METAL

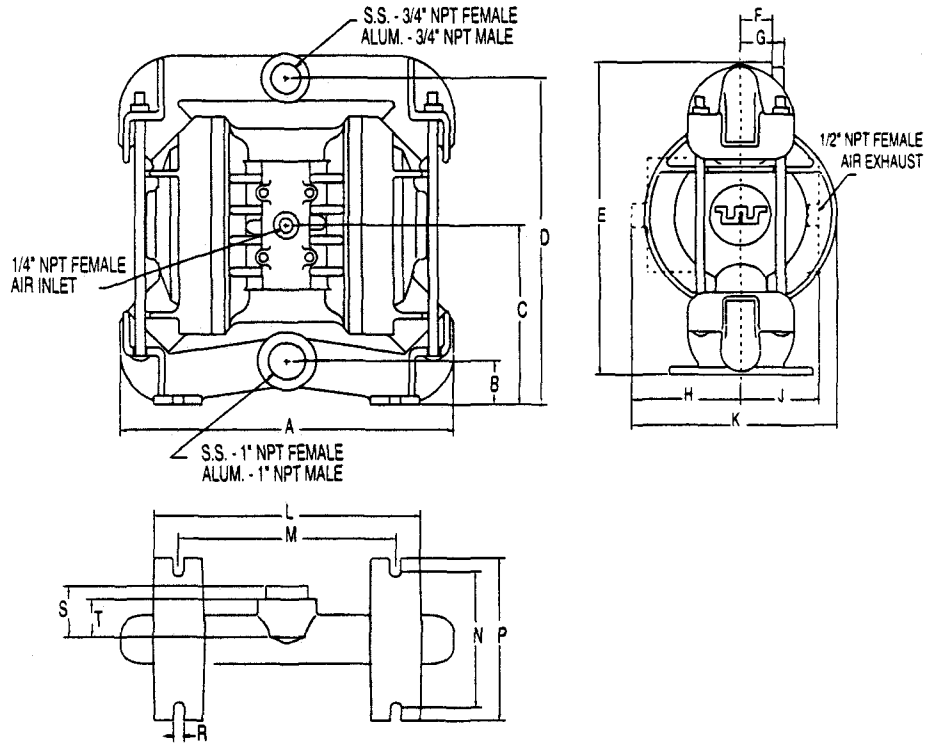

DIMENSIONS – M2 (METAL)		
ITEM	STANDARD (inch)	METRIC (mm)
A	10 17/32	267.5
B	1 7/16	36.5
C	5 7/16	138.0
D	10	254.0
E	11	279.4
F	1 1/8	28.6
G	1 9/16	39.7
H	3 3/4	95.2
J	3 1/32	77.0
K	7 1/4	184.2
L	8 1/4	209.6
M	6 3/4	171.5
N	4 3/16	106.4
P	5	127.0
R	5/16	7.9
S	1 21/32	42.1
T	1 1/4	31.8

BSP threads available.
Aluminum pumps are manufactured with mild steel nipples. Stainless steel nipples are available.

SECTION 1B

DIMENSIONAL DRAWING
MODEL M2 METAL SOLENOID-OPERATED

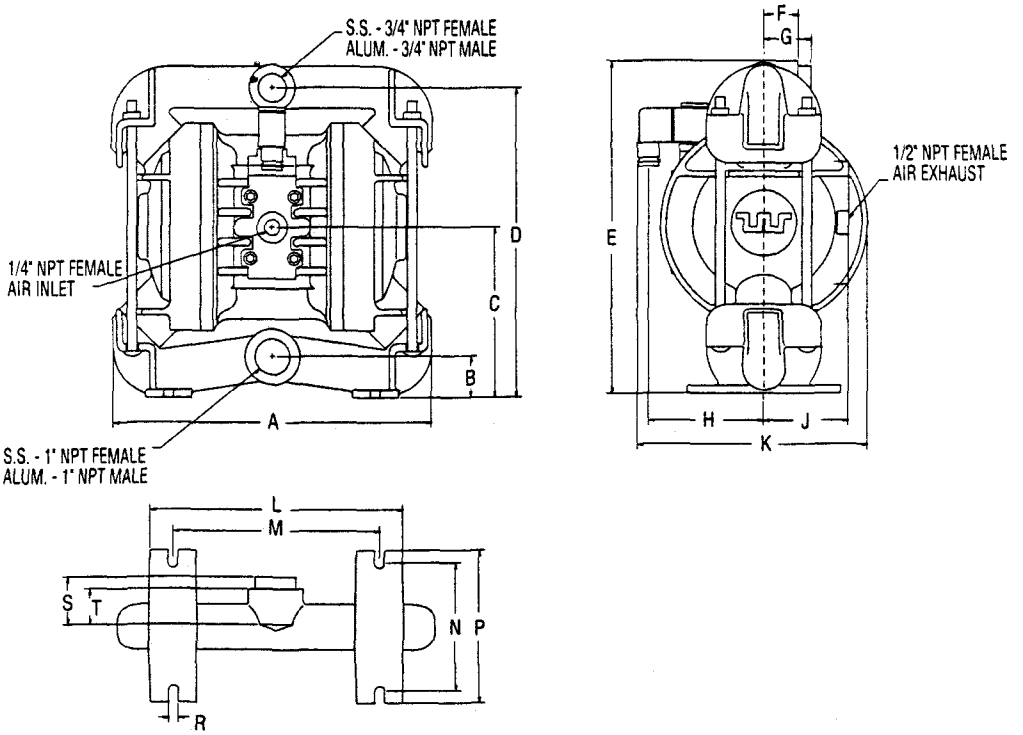

DIMENSIONS – M2 (METAL) SOLENOID-OPERATED		
ITEM	STANDARD (inch)	METRIC (mm)
A	10 17/32	267.5
B	1 7/16	36.5
C	5 7/16	138.0
D	10	254.0
E	11	279.4
F	1 1/8	28.6
G	1 7/8	47.6
H	3 25/32	96.0
J	3 1/32	77.0
K	7 1/2	190.5
L	8 1/4	209.6
M	6 3/4	171.5
N	4 3/16	106.4
P	5	127.0
R	5/16	7.94
S	2 1/32	51.6
T	1 1/4	31.8

BSP threads available.
Aluminum pumps are manufactured with mild steel nipples. Stainless steel nipples are available.

SECTION 1C

DIMENSIONAL DRAWING
MODEL M2 FOOD PROCESSING

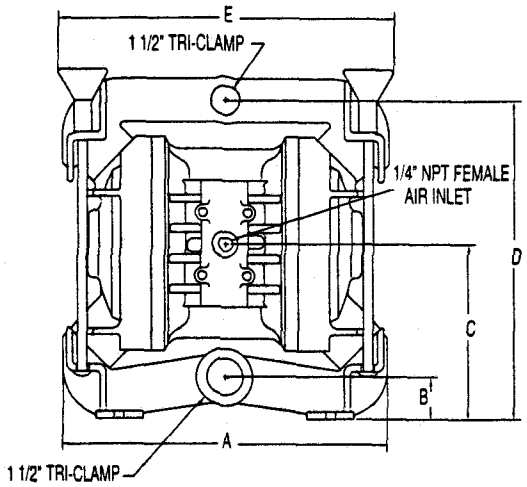

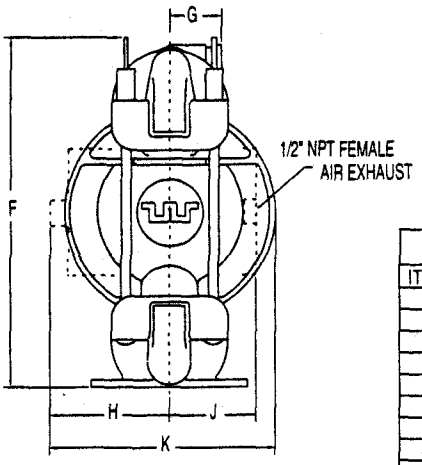

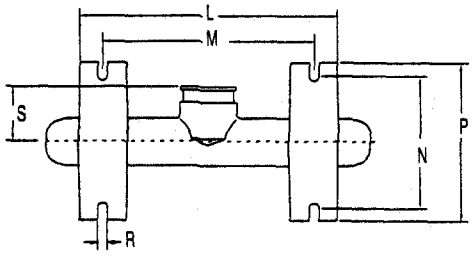

DIMENSIONS – M2 (FOOD PROCESSING)		
ITEM	STANDARD (inch)	METRIC (mm)
A	10 17/32	267.5
B	1 11/32	34.1
C	5 9/16	141.3
D	10 1/16	255.6
E	11	279.9
F	11 5/8	295.3
G	1 5/8	41.3
H	3 13/16	96.8
J	2 3/4	69.8
K	7 3/16	182.6
L	8 1/4	209.6
M	6 3/4	171.4
N	4 3/16	106.4
P	5	127.0
R	5/16	7.9
S	1 3/4	44.4

SECTION 1D

DIMENSIONAL DRAWING
MODEL M2 FOOD PROCESSING SOLENOID-OPERATED

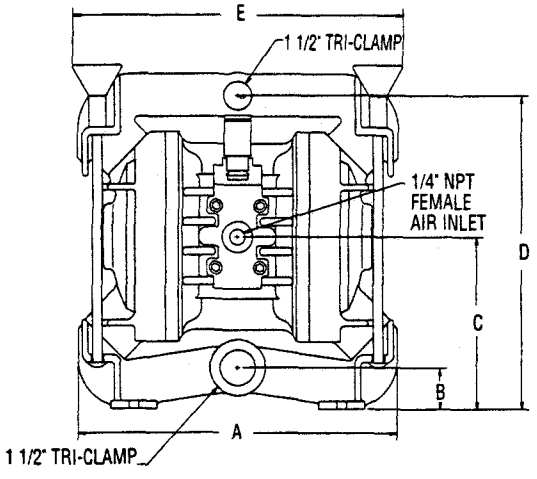

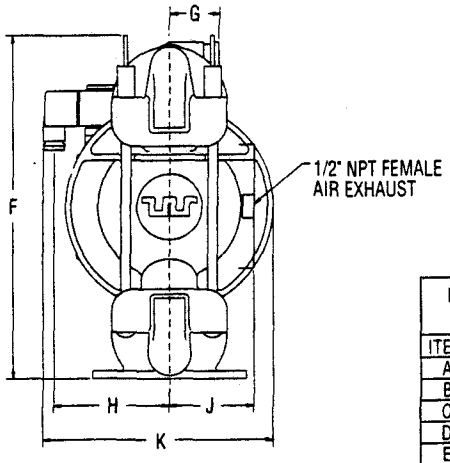

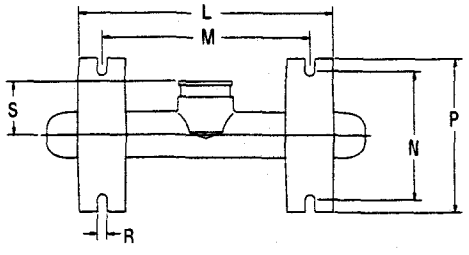

DIMENSIONS – M2 (FOOD PROCESSING) SOLENOID-OPERATED		
ITEM	STANDARD (inch)	METRIC (mm)
A	10 3/8	263.5
B	1 3/8	34.9
C	5 7/16	138.1
D	10 1/16	255.6
E	10 1/2	266.7
F	11 5/8	295.3
G	1 5/8	41.3
H	3 25/32	96.0
J	2 31/32	75.4
K	7 1/2	190.5
L	8 1/4	209.6
M	6 3/4	171.5
N	4 3/16	106.4
P	5	127.0
R	5/16	7.9
S	1 23/32	43.6

SECTION 1E

DIMENSIONAL DRAWING
MODEL M2R CHAMP

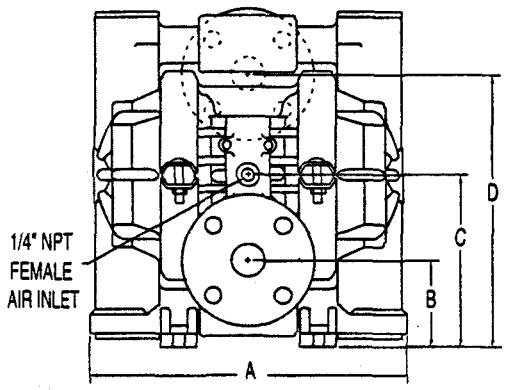

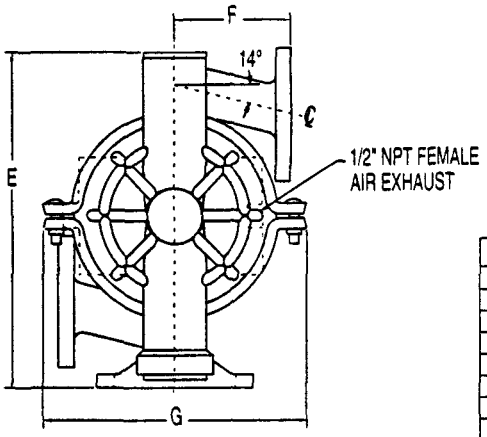

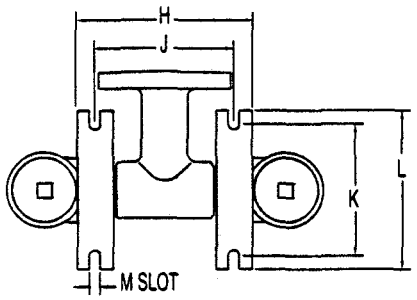

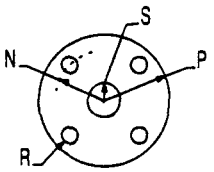

FLANGE
ANSI/DIN
150 pound class

DIMENSIONS – M2R (PLASTIC)		
ITEM	STANDARD (inch)	METRIC (mm)
A	11	279.0
B	2 29/32	73.8
C	6 3/8	161.8
D	9 15/16	252.2
E	12	304.8
F	4 3/16	106.3
G	9 3/8	238.1
H	6 3/16	157.2
J	4 29/32	124.5
K	5 17/32	140.4
L	5 7/16	138.1
M	3/8	9.5
	ANSI FLANGE	DIN FLANGE
N	1 19/32 RAD.	42.9 RAD.
P	2 5/32 RAD.	57.2 RAD.
R	5/8 DIA.	14.3 DIA.
S	1	25.4

DIN flanges available.

SECTION 1F

DIMENSIONAL DRAWING
MODEL M2R SOLENOID-OPERATED CHAMP

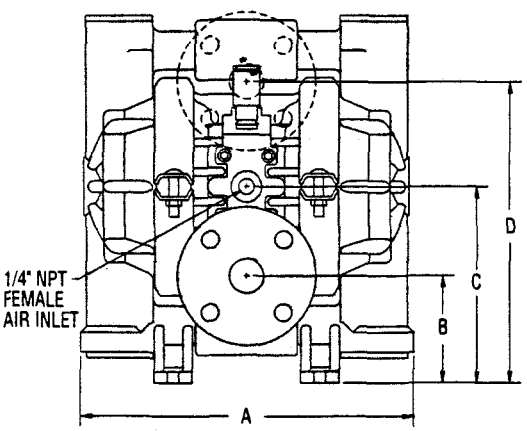

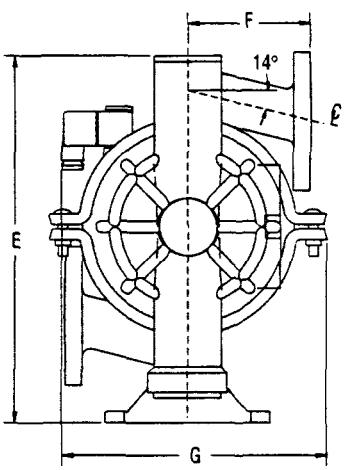

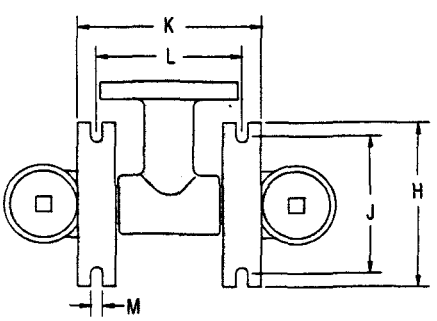

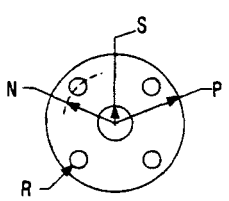

FLANGE
ANSI/DIN
150 pound class

DIMENSIONS – M2R (PLASTIC) SOLENOID-OPERATED		
ITEM	STANDARD (inch)	METRIC (mm)
A	11	279.0
B	2 29/32	73.8
C	6 3/8	161.8
D	9 15/16	252.2
E	12	304.8
F	4 3/16	106.3
G	8 41/64	219.5
H	6 3/16	157.2
J	4 29/32	124.5
K	4 17/32	115.1
L	5 7/16	138.1
M	3/8	9.5
	ANSI FLANGE	DIN FLANGE
N	1 19/32 RAD.	42.9 RAD.
P	2 1/4 RAD.	57.2 RAD.
R	5/8 DIA.	14.3 DIA.
S	1	25.4

DIN flanges available.

PUMP PERFORMANCE CURVES
AIR-OPERATED PUMPS

SECTION 2A
MODEL M2 METAL (Rubber/TPE-Fitted)

WILDEN®
MODEL M2 METAL
(RUBBER/TPE-FITTED)

Height .....11"
Width .....10 17/32"
Depth .....7¼"
Weight.....Aluminum 22 lbs.
316 S.S. 31 lbs.
Hastelloy C 42 lbs.
Air Inlet .....¼" Female NPT
Inlet .....1" Male NPT[1]
Outlet.....¾" Male NPT[1]
Suction Lift .....**Rubber 19' Dry**
25' Wet
TPE 13' Dry
25' Wet
Displacement per Stroke ... .0897 gal.[2]
Max. Size Solids .....⅛" Dia.

Example: To pump 10 gpm against a discharge head of 50 psig requires 60 psig and 12 scfm air consumption. (See dot on chart.)

[1]BSP threads available.
[2]Displacement per stroke was calculated at 70 psig air inlet pressure against a 30 psig head pressure.

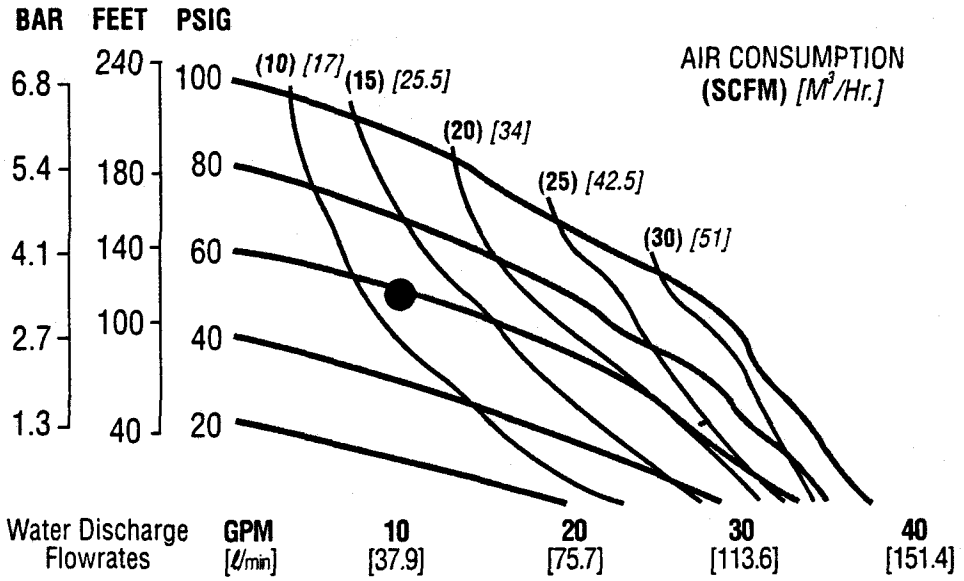

Volumes indicated on chart were determined by actually pumping water in calibrated tanks.

SECTION 2B
MODEL M2 METAL (Teflon®-Fitted)

WILDEN®
MODEL M2 METAL
(TEFLON®-FITTED)

Height .....11"
Width .....10 17/32"
Depth .....7¼"
Weight.....Aluminum 22 lbs.
316 S.S. 31 lbs.
Hastelloy C 42 lbs.
Air Inlet .....¼" Female NPT
Inlet .....1" Male NPT[1]
Outlet.....¾" Male NPT[1]
Suction Lift .....**8' Dry**
25' Wet
Displacement per Stroke ... .0448 gal.[2]
Max. Size Solids .....⅛" Dia.

Example: To pump 10 gpm against a discharge head of 50 psig requires 77psig and 20 scfm air consumption. (See dot on chart.)

[1]BSP threads available.
[2]Displacement per stroke was calculated at 70 psig air inlet pressure against a 30 psig head pressure.

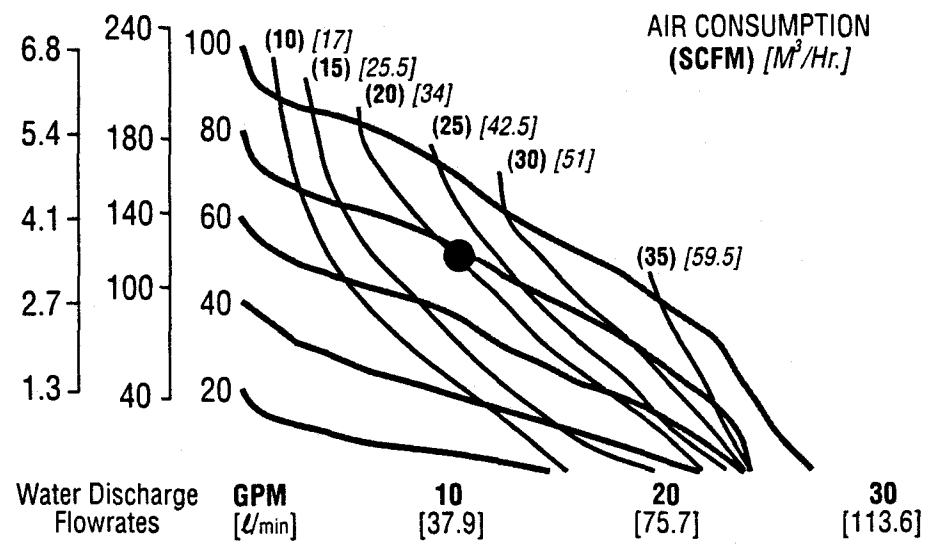

Volumes indicated on chart were determined by actually pumping water in calibrated tanks.

PUMP PERFORMANCE CURVES
AIR-OPERATED PUMPS

SECTION 2C
MODEL M2R CHAMP® (Rubber/TPE-Fitted)

WILDEN®
MODEL M2R CHAMP®

Height .....12"
Width .....11"
Depth .....9⅜"
Weight .....Polypropylene 18 lbs.
PVDF 23 lbs.
Air Inlet .....¼" NPT
Inlet.....1"
Outlet .....1"
Suction Lift .....**Rubber 17' Dry**
25' Wet
TPE 9' Dry
25' Wet
Displacement per Stroke ... .0865 gal.[1]
Max. Size Solids .....⅛" Dia.

Example: To pump 15 gpm against a discharge head of 45 psig requires 60 psig and 10 scfm air consumption. (See dot on chart.)

[1]Displacement per stroke was calculated at 70 psig air inlet pressure against a 30 psig head pressure.

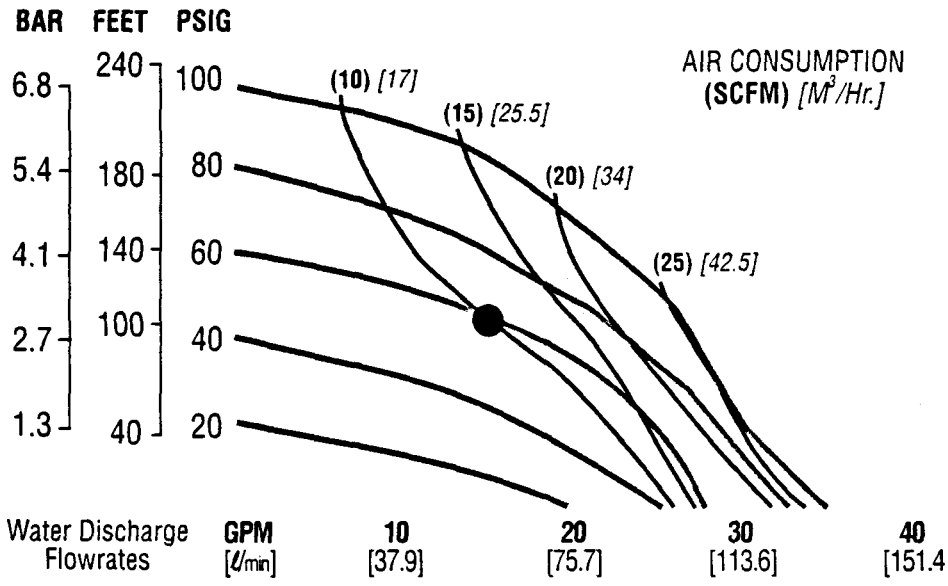

Volumes indicated on chart were determined by actually pumping water in calibrated tanks.

SECTION 2D
MODEL M2R CHAMP® (Teflon®-Fitted)

WILDEN®
MODEL M2R CHAMP®
(TEFLON®-FITTED)

Height .....12"
Width .....11"
Depth .....9⅜"
Weight .....Polypropylene 18 lbs.
PVDF 23 lbs.
Air Inlet .....¼" NPT
Inlet.....1"
Outlet .....1"
Suction Lift.....**7' Dry**
25' Wet
Displacement per Stroke ... .0468 gal.[1]
Max. Size Solids .....⅛" Dia.

Example: To pump 7 gpm against a discharge head of 64 psig requires 80 psig and 10 scfm air consumption. (See dot on chart.)

[1]Displacement per stroke was calculated at 70 psig air inlet pressure against a 30 psig head pressure.

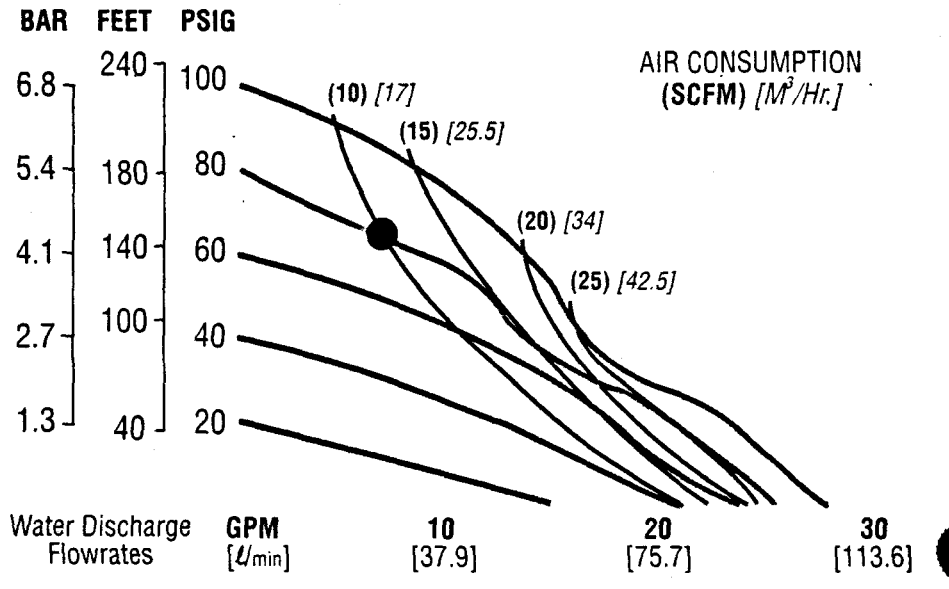

Volumes indicated on chart were determined by actually pumping water in calibrated tanks.

SECTION 3A
INSTALLATION
M2 & M2R AIR-OPERATED PUMPS

The Model **M2 Metal** has a 1" inlet and ¾" outlet and is designed for flows to 37 gpm. The **M2 Metal** pump is manufactured with wetted parts of aluminum, 316 Stainless Steel, or Hastelloy. The Model **M2R Champ** has a 1" inlet and 1" outlet and manufacturing with wetted parts of pure, unpigmented Polypropylene or PVDF. The center section of the **M2** and **M2R** is constructed of glass-filled polypropylene. A variety of diaphragms, valve balls, and O-rings are available to satisfy temperature, chemical compatibility, abrasion and flex concerns.

The suction pipe size should be at least 1" diameter or larger if highly viscous material is being pumped. The suction hose must be non-collapsible, reinforced type as the M2 is capable of pulling a high vacuum. Discharge piping should be at least 1"; larger diameter can be used to reduce friction losses. It is critical that all fittings and connections are airtight or a reduction or loss of pump suction capability will result.

For M2 Champ models, Wilden offers 150 lb. ANSI and DIN flanges. The following details should be noted when mating these to pipe works:

- A 60–80 shore gasket that covers the entire flange face should be used.
- The gasket should be between .075" and .175" thickness.
- Mating flanges with flat as opposed to raised surfaces should be used.
- The flanges should be tightened to a minimum of 5 ft.-lbs. but no more than 10 ft.-lbs.

The M2 can be used in submersible applications only when both wetted and non-wetted portions are compatible with the material being pumped. If the pump is to be used in a submersible application, a hose should be attached to the pump's air exhaust and the exhaust air piped above the liquid level.

If the pump is to be used in a self-priming application, be sure that all connections are airtight and that the suction lift is within the pump's ability. Note: Materials of construction and elastomer material have an effect on suction lift parameters. Please consult Wilden distributors for specifics.

Pumps in service with a positive suction head are most efficient when inlet pressure is limited to 7–10 psig. Premature diaphragm failure may occur if positive suction is 11 psig and higher.

THE MODEL M2 WILL PASS 1/8" SOLIDS. WHENEVER THE POSSIBILITY EXISTS THAT LARGER SOLID OBJECTS MAY BE SUCKED INTO THE PUMP, A STRAINER SHOULD BE USED ON THE SUCTION LINE.

CAUTION: DO NOT EXCEED 125 PSIG AIR SUPPLY PRESSURE.

ALUMINUM PUMPS ARE FUNCTION TESTED WITH WATER AND SODIUM SILICATE. PUMPS SHOULD BE THOROUGHLY FLUSHED WITH WATER BEFORE INSTALLING INTO PROCESS LINES. FDA AND USDA APPROVED PUMPS SHOULD BE CLEANED AND/OR SANITIZED BEFORE BEING USED ON EDIBLE PRODUCTS.

BLOW OUT AIR LINE FOR 10 TO 20 SECONDS BEFORE ATTACHING TO PUMP TO MAKE SURE ALL PIPE LINE DEBRIS IS CLEAR.

SECTION 3B
INSTALLATION
M2 & M2R SOLENOID-OPERATED PUMPS

The solenoid-operated **Models M2** and **M2R** are designed for flows to 24.9 gpm. This maximum flow rate was calculated at 300 strokes per minute with 100 psig air inlet against 0 psig discharge head. The **M2R Champ** pump is manufactured with wetted parts of pure, unpigmented PVDF or polypropylene. The **M2 Metal** pump is manufactured with wetted parts of aluminum, 316 stainless steel, or Hastelloy. The center section of the **M2 Metal** and **M2R Champ** pump is of nylon construction. A variety of diaphragms, valve balls, and O-rings are available to satisfy temperature, chemical compatibility, abrasion and flex concerns.

In the solenoid-operated pump models, the standard air valve is replaced with a two position, four-way solenoid valve that has a single operator and spring return. The valve is internally air piloted for longer coil and operator life.

When the solenoid is unpowered, one air chamber is pressurized with air, while the opposite chamber is exhausted. When electric power is applied, the solenoid shifts, and the pressurized air chamber is exhausted while the opposite chamber is pressurized. By alternately applying and removing power, the solenoid-operated pump runs like a standard Wilden pump.

The speed of the pump is controlled electrically. Since each stroke is controlled by an electrical signal, the pump is ideal for batching and other electrically controlled dispensing applications.

Although the speed of the pump is controlled electrically, the air pressure is important. Air pressure displaces the fluid, and if the pressure is insufficient to complete the physical stroke before an electronic impulse signals the pump to shift, the stroke will not be completed, and the displacement per stroke will be reduced. This does not harm the unit in any way, but it may cause inaccuracy when attempting to batch specific quantities with high precision if this effect is not taken into account.

The suction pipe size should be at least 1" diameter or larger if highly viscous material is being pumped. The suction hose must be non-collapsible, reinforced type as the M2 is capable of pulling a high vacuum. Discharge piping should be at least 1"; larger diameter can be used to reduce friction losses. It is critical that all fittings and connections are airtight or a reduction or loss of pump suction capability will result.

All wiring used to operated the pump should be placed and connecting according to the proper electrical codes. It is important that the wiring is of adequate gauge to carry the current required to operated the pump. In addition, it is necessary that the electrical power supply is large enough to supply the current required to operate the pump. Wiring should be above ground level if possible (in case of fluid spill or leakage), and all wiring and connections which could become wet or damp should be made watertight.

If the pump is to be used in a self-priming application, be sure that all connections are airtight and that the suction lift is within the pump's ability. Note: Materials of construction and elastomer material have an effect on suction lift parameters. Please consult authorized Wilden distributors for specifics.

Pumps in service with a positive suction head are most efficient when inlet pressure is limited to 7–10 psig. Premature diaphragm failure may occur if positive suction head is 11 psig and higher.

The solenoid valve is rated for continuous duty; however, stopping on an even number stroke count insures that the electrical power is off when pump is stopped. This practice is safer and also eliminates unwanted strokes when the system is shut down and electrical power is off.

THE MODEL M2 WILL PASS 1/8" SOLIDS. WHENEVER THE POSSIBILITY EXISTS THAT LARGER SOLID OBJECTS MAY BE SUCKED INTO THE PUMP, A STRAINER SHOULD BE USED ON THE SUCTION LINE.

CAUTION: DO NOT EXCEED 125 PSIG AIR SUPPLY PRESSURE.

BLOW OUT AIR LINE FOR 10 TO 20 SECONDS BEFORE ATTACHING TO PUMP TO MAKE SURE ALL PIPE LINE DEBRIS IS CLEAR.

WARNING: Only the Nema 7 solenoid valve can be used in an area where explosion proof equipment is required. Nema 4 solenoid valves are not suitable.

There are three coil options available in both Nema 4 and Nema 7 ratings. One coil allows for 110V AC operation, one allows for 24V DC operation, and the third allows for either 24V AC or 12V DC operation.

ELECTRICAL CONNECTIONS — SOLENOID-OPERATED

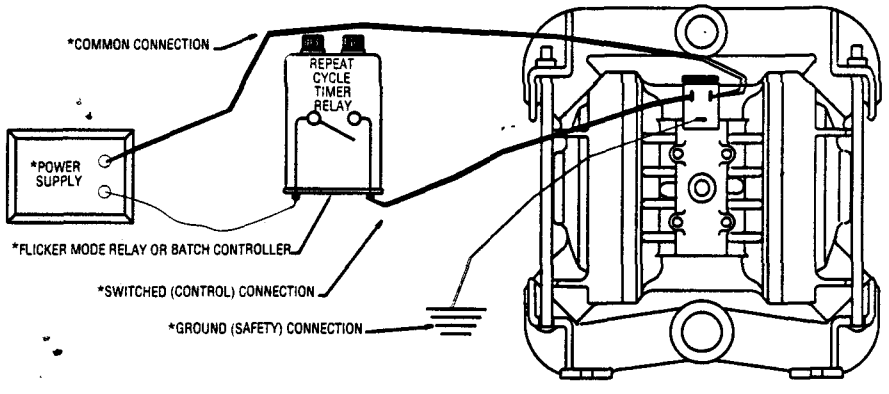

PLUMBING CONNECTIONS — SOLENOID-OPERATED

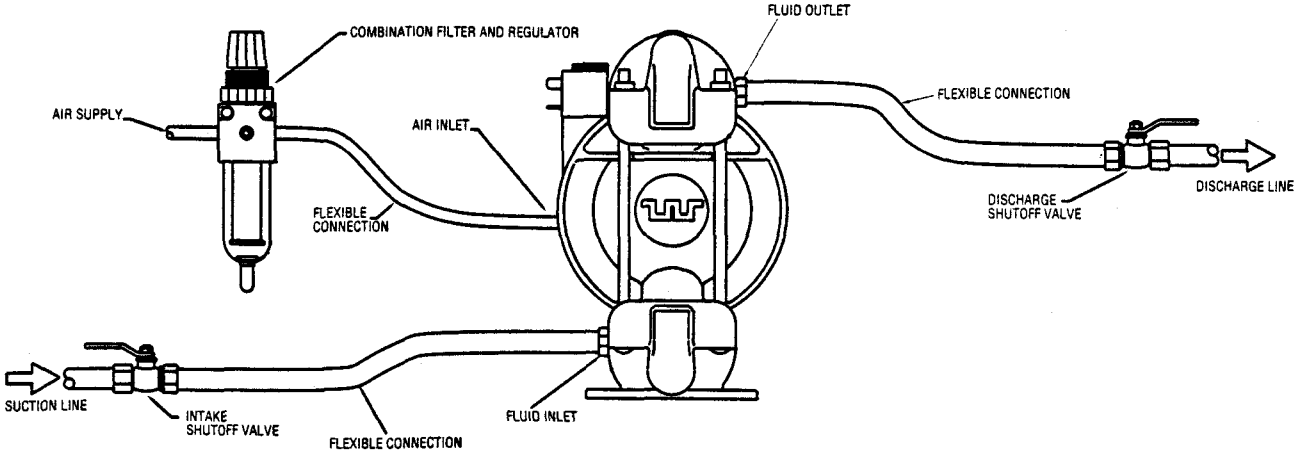

SECTION 3C
WILDEN SOLENOID-OPERATED PUMPS

QUICK REFERENCE

	M2R PLASTIC		M2 METAL	
SPECIFICATIONS	**RUBBER**	**TEFLON**	**RUBBER**	**TEFLON**
Maximum Flow Rate at 0 Head	23.5	15.4	24.9	14.4
# of Strokes per Minute @ Maximum Flow[1]	300	300	300	300
Maximum Air Pressure	125 psi	125 psi	125 psi	125 psi
Minimum Air Pressure Required	45 psi	45 psi	45 psi	45 psi
Displacement per Stroke[2]	.125	.057	.117	.052
Air Inlet Size (Female NPT)	1/4"	1/4"	1/4"	1/4"
Dry Suction Lift	16'	11	16'	7'
Wet Suction Lift	25'	25'	25'	25'
Lubrication (Pre-Lube)	Buna Compatible NLGI Grade 2 Grease			
Inner Piston P/N	02-3710-01-100	02-3710-01-100	02-3710-01-100	02-3710-01-100
Terminal Connector P/N	00-2130-99	00-2130-99	00-2130-99	00-2130-99

[1]Stroke count based on complete stroke completion.
[2]Displacement per stroke is dynamic. Figure was calculated with 70 psi air pressure against 30 psi discharge head. 80 strokes per minute.

ELECTRICAL INFORMATION

VOLTAGE	PART NUMBER	RATING	AMPS (INRUSH)	AMPS (HOLDING)	RESISTIVITY (OHMS)
24V DC	00-2120-99	NEMA 4	.25	.25	96
24VDC	00-2120-99-154	NEMA 7	.25	.25	25
12V DC	00-2110-99	NEMA 4	.445	.445	26
12V DC	00-2110-99-153	NEMA 7	.445	.445	26
24V AC[3]	00-2110-99	NEMA 4	.445	.34	26
24V AC[3]	00-2110-99-153	NEMA 7	.445	.34	26
110V AC[4]	00-2110-99-155	NEMA 4	.25	.166	156
110V AC[4]	00-2110-99-156	NEMA 7	.25	.166	156

[3]24 Volts @ 60 Hz, 22 Volts @ 50 Hz.
[4]120 Volts @ 60 Hz, 110 Volts @ 50 Hz.

SECTION 4A

SUGGESTED OPERATION AND MAINTENANCE INSTRUCTIONS

M2 & M2R AIR-OPERATED PUMPS

INSTALLATION: Months of careful planning, study, and selection efforts can result in unsatisfactory pump performance if installation details are left to chance.

Premature failure and long term dissatisfaction can be avoided if reasonable care is exercised throughout the installation process.

LOCATION: Noise, safety, and other logistical factors usually dictate that "utility" equipment be situated away from the production floor. Multiple installations with conflicting requirements can result in congestion of utility areas, leaving few choices for siting of additional pumps.

Within the framework of these and other existing conditions, every pump should be located in such a way that four key factors are balanced against each other to maximum advantage.

1. ACCESS: First of all, the location should be accessible. If it's easy to reach the pump, maintenance personnel will have an easier time carrying out routine inspections and adjustments. Should major repairs become necessary, ease of access can play a key role in speeding the repair process and reducing total downtime.

2. AIR SUPPLY: Every pump location should have an air line large enough to supply the volume of air necessary to achieve the desired pumping rate (see pump performance chart). Use air pressure up to a maximum of 125 psi depending upon pumping requirements.

For best results, the pumps should use an air filter, regulator, and lubricator system. The use of an air filter before the pump will insure that the majority of any pipeline contaminants will be eliminated. The use of a lubricant, suitable for the application, helps perform a number of functions. Lubricants reduce friction to minimize required shifting forces and reduce wear. Lubricants provide a protective coating against some forms of corrosion and contaminants. **Wilden suggests an oil with arctic characteristics (ISO 15-5Wt.) This oil is chemically compatible with the center block O-rings and has a low pour point to guard against problems associated with low temperatures.** The amount of lubrication required is directly related to the amount of oil introduced from the factory air system. We therefore suggest that the lowest setting on the lubricator be utilized and then increased as necessary.

Pump discharge rate can be controlled by limiting the volume and/or pressure of the air supply to the pump (preferred method). The use of a needle valve installed at the air inlet to the pump is suggested for this purpose. Pump discharge rate can also be controlled by throttling the pump discharge by installing a valve in the discharge line of the pump when the need to control the pump from a remote location exists. When the pump discharge pressure equals or exceeds the air supply pressure, the pump will stop; no bypass or pressure relief valve is needed, and pump damage will not occur. When operation is controlled by a solenoid valve in the air line, a three-way valve should be used. Pumping volume can be set by counting the number of strokes per minute.

A muffler installed on the pump's air exhaust will give quiet exhaust. Sound levels are reduced below OSHA specifications using a Wilden muffler.

3. ELEVATION: Selecting a site that is well within the pump's dynamic lift capability will assure that loss-of-prime troubles will be eliminated. In addition, pump efficiency can be adversely affected if proper attention is not given to elevation (see pump performance chart).

4. PIPING: Final determination of the pump site should not be made until the piping problems of each possible location have been evaluated. The impact of current and future installations should be considered ahead of time to make sure that inadvertent restrictions are not created for any remaining sites.

The best choice possible will be a site involving the shortest and the straightest hook-up of suction and discharge piping. Unnecessary elbows, bends, and fittings should be avoided. Pipe sizes should be selected so as to keep friction losses within practical limits. All piping should be supported independently of the pump. In addition, it should line up without placing stress on the pump fittings.

Expansion joints can be installed to aid in absorbing the forces created by the natural reciprocating action of the pump. If the pump is to be bolted down to a solid foundation, a mounting pad placed between the pump and foundation will assist in minimizing pump vibration. Flexible connections between the pump and rigid piping will also assist in minimizing pump vibration. If quick-closing valves are installed at any point in the discharge system, or if pulsation within a system becomes a problem, a surge suppressor should be installed to protect the pump, piping and gauges from surges and water hammer.

When pumps are installed in applications involving flooded suction or suction head pressures, a gate valve should be installed in the suction line to permit closing of the line for pump service.

INSPECTIONS: Periodic inspections have been found to offer the best means for preventing unscheduled pump downtime.

Individuals responsible for checking and maintaining lubrication levels in the pumps should also check for any abnormal noise or leakage. Personnel familiar with the pumps' construction and service should be informed of any abnormalities that are detected.

RECORDS: When service is required, a record should be made of all necessary repairs and replacements. Over a period of time, such records can become a valuable tool for predicting and preventing future maintenance problems and unscheduled downtime. In addition, accurate records make it possible to identify pumps that are poorly suited to their applications.

SECTION 4B

SUGGESTED OPERATION AND MAINTENANCE INSTRUCTIONS

M2 & M2R SOLENOID-OPERATED PUMPS

INSTALLATION: Months of careful planning, study, and selection efforts can result in unsatisfactory pump performance if installation details are left to chance.

Premature failure and long term dissatisfaction can be avoided if reasonable care is exercised throughout the installation process.

LOCATION: Noise, safety, and other logistical factors usually dictate that "utility" equipment be situated away from the production floor. Multiple installations with conflicting requirements can result in congestion of utility areas, leaving few choices for siting of additional pumps.

Within the framework of these and other existing conditions, every pump should be located in such a way that five key factors are balanced against each other to maximum advantage.

1. ACCESS: First of all, the location should be accessible. If it's easier to reach the pump, maintenance personnel will have an easier time carrying out routine inspections and adjustments. Should major repairs become necessary, ease of access can play a key role in speeding the repair process and reducing total downtime.

2. AIR SUPPLY: Every pump location should have an air line large enough to supply the volume of air necessary to achieve the desired pumping rate (see pump performance chart). Use air pressure up to a maximum of 110 psi depending upon pumping requirements.

For best results, the pumps should use an air filter and a regulator. The use of an air filter before the pump inlet will insure that the majority of pipeline contaminants will be eliminated. The solenoid operated pump is permanently lubricated during assembly, and requires no additional lubrication under normal operation. If the unit runs under extreme conditions (continuous operation at high speeds), it may be necessary to relubricate center block with a **buna compatible NLGI Grade 2 grease** every 50 million cycles. Continuous lubrication with a compatible oil is not harmful, and will provide longer seal life, but it may flush all grease out of the unit.

Pump discharge rate is controlled electrically by varying the rate of alternation of the stroke signals. The pump will continue to shift if the liquid discharge line is closed, however no media will be pumped. This will not harm the pump in any way, but it is wasteful of the pressurized air. The pump will not shift until the air inlet pressure exceeds the minimum supply pressure requirement of approximately 40 psig. A minimum of 45 psi is recommended to ensure reliable operation.

A muffler can be installed to reduce the amount of noise generated by the pump. Use of the specified Wilden muffler will reduce noise levels below OSHA specifications.

3. ELEVATION: Selecting a site that is well within the pump's dynamic lift capability will assure that loss-of-prime troubles will be eliminated. In addition, pump efficiency can be adversely affected if proper attention is not given to elevation (see pump performance chart).

4. PIPING: Final determination of the pump site should not be made until the piping problems of each possible location have been evaluated. The impact of current and future installations should be considered ahead of time to make sure that inadvertent restrictions are not created for any remaining sites.

The best choice possible will be a site involving the shortest and the straightest hook-up of suction and discharge piping. Unnecessary elbows, bends, and fittings should be avoided. Pipe sizes should be selected so as to keep friction losses within practical limits. All piping should be supported independently of the pump. In addition, it should line up without placing stress on the pump fittings.

Expansion joints can be installed to aid in absorbing the forces created by the natural reciprocating action of the pump. If the pump is to be bolted down to a solid foundation, a mounting pad placed between the pump and foundation will assist in minimizing pump vibration. Flexible connections between the pump and rigid piping will also assist in minimizing pump vibration. If quick-closing valves are installed at any point in the discharge system, or if pulsation within a system becomes a problem, a surge suppressor should be installed to protect the pump, piping and gauges from surges and water hammer.

When pumps are installed in applications involving flooded suction or suction head pressures, a gate valve should be installed in the suction line to permit closing of the line for pump service.

INSPECTIONS: Periodic inspections have been found to offer the best means for preventing unscheduled pump downtime.

Individuals responsible for checking and maintaining lubrication levels in the pumps should also check for any abnormal noise or leakage. Personnel familiar with the pumps' construction and service should be informed of any abnormalities that are detected.

RECORDS: When service is required, a record should be made of all necessary repairs and replacements. Over a period of time, such records can become a valuable tool for predicting and preventing future maintenance problems and unscheduled downtime. In addition, accurate records make it possible to identify pumps that are poorly suited to their applications.

SECTION 5A
TROUBLESHOOTING
M2 & M2R AIR-OPERATED PUMPS

Pump will not run or runs slowly.

1. Check air inlet screen and air filter for debris.
2. Check for sticking air valve, flush air valve in solvent.
3. Check for worn out air valve. If piston face in air valve is shiny instead of dull, air valve is probably worn beyond working tolerances and must be replaced.
4. Check center block O-rings. If worn excessively, they will not seal and air will simply flow through pump and out air exhaust. Use only Wilden O-rings as they are of special construction.
5. Check for rotating piston in air valve.
6. Check type of lubricant being used. A higher viscosity oil than suggested may cause the piston to stick or run erratically. Wilden suggests the use of an oil with arctic characteristics (ISO 15-5 wt.).

Pump runs but little or no product flows.

1. Check for pump cavitation; slow pump speed down to match thickness of material being pumped.
2. Check for sticking ball checks. If material being pumped is not compatible with pump elastomers, swelling may occur. Replace ball checks and seal with proper elastomers.
3. Check to make sure all suction connections are air tight, especially clamp bands around intake balls.

Pump air valves freezes.

Check for excessive moisture in compressed air. Either install dryer or hot air generator for compressed air.

Air bubbles in pump discharge.

1. Check for ruptured diaphragm.
2. Check tightness of clamp bands, especially at intake manifold.

Product comes out air exhaust.

1. Check for diaphragm rupture.
2. Check tightness of piston plates to shaft.

SECTION 5B
TROUBLESHOOTING
M2 & M2R SOLENOID-OPERATED PUMPS

Pump will not run.

1. Check for pressurized air at the inlet. (Min. 45 psig.)
2. Check air inlet and filter for debris.
3. Connect a test lamp to the two wires which run to pump and ensure that the lamp cycles on and off.
4. Make sure that the air valve manual override (small red knob on front of valve) is switched to the "0" position.
5. Check pilot pressure vent at the top of the operator/coil assembly to ensure that it is not clogged.
6. Check for a worn out air valve. If air continually blows out the exhaust in very large quantities, the air valve seals may be worn beyond their ability to function. In this case, the valve must be replaced.

NOTE: Before the valve is scrapped, it is possible that it may be saved by completely disassembling the valve, cleaning all components and relubricating the valve.

Pump runs but little or no fluid comes out.

1. Check that the discharge isolation valve is not closed.
2. Check that the electronic signal is slow enough that the pump is able to complete each physical stroke before it is signaled to change direction. The time required to complete the stroke is determined by a variety of factors which include fluid viscosity and head pressure. The shaft can be viewed if the muffler is removed to verify that the pump is stroking.
3. Check for pump cavitation; slow pump speed down to match the thickness of the material being pumped.
4. Check for sticking ball check valves. If the material being pumped is not compatible with the pump elastomers, swelling may occur. Replace ball check valves and O-ring with the proper elastomers.
5. Check to make sure that all suction connections are air tight, and that the clamp bands are properly tightened.

Pump air passages blocked with ice.

Check for excessive moisture in compressed air line. As the air expands out the exhaust during the operation of the pump, water vapor entrapped in the compressed air can freeze and block the air passageways in the pump. If this occurs, it may be necessary to install a coalescing filter, an air dryer, or a hot air generator for the compressed air.

Air bubbles in pump discharge.

1. Check for ruptured diaphragm.
2. Check tightness of clamp bands, and the integrity of the O-rings, especially at intake manifold.

Product comes out air exhaust.

1. Check for diaphragm rupture.
2. Check tightness of piston plates to shaft.

SECTION 6A
DIRECTIONS FOR DISASSEMBLY/REASSEMBLY
MODEL M2 METAL PUMPS

CAUTION: Before any maintenance or repair is attempted, the compressed air line to the pump should be disconnected and all air pressure allowed to bleed from pump. Disconnect all intake, discharge, and air lines. Drain the pump by turning it upside down and allowing any fluid to flow into a suitable container.

The Wilden M2 has a 1" inlet and 3/4" outlet and is designed for flows up to 37 GPM. Its one-piece polypropylene center section with vertical piston is based on design simplicity and proven efficiency. To aid in assembly of pump, alignment marks have been cast in to the air chambers and the water chambers.

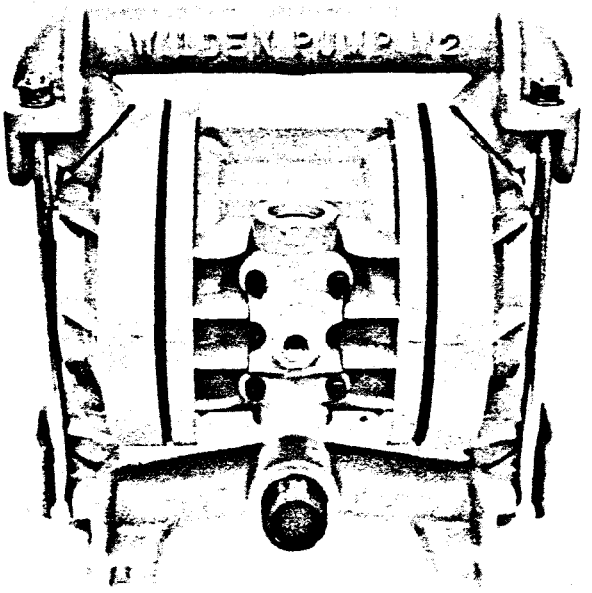

DISASSEMBLY: **NOTE:** Model used for these instructions incorporates rubber diaphragms and balls. Models with Teflon® diaphragms and balls are the same except where noted.

STEP 1

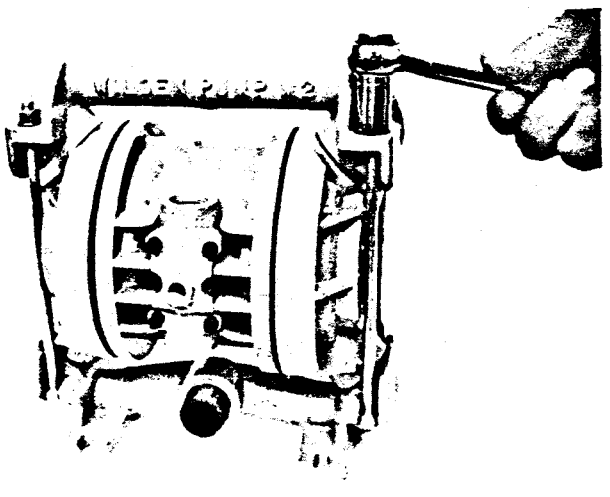

Figure 1A

Figure 1B

Start disassembly using a 9/16" wrench, loosen the four bolts and slide the long manifold bolts out from under the slots in the inlet manifold. It is not necessary to remove the nuts from the bolts. Lift off discharge manifold; the two discharge valve balls, seats and O-rings can be removed for inspection. Next, place both hands on the water chambers and lift entire center section, including chambers, from inlet manifold. The water chambers can now be removed from the center section. The inlet valve balls, seats and seat O-rings are now available for inspection. (Models fitted with Teflon® O-rings should always be reassembled with new Wilden Teflon® O-rings.) See figures *1A* and *1B.*

Figure 2A

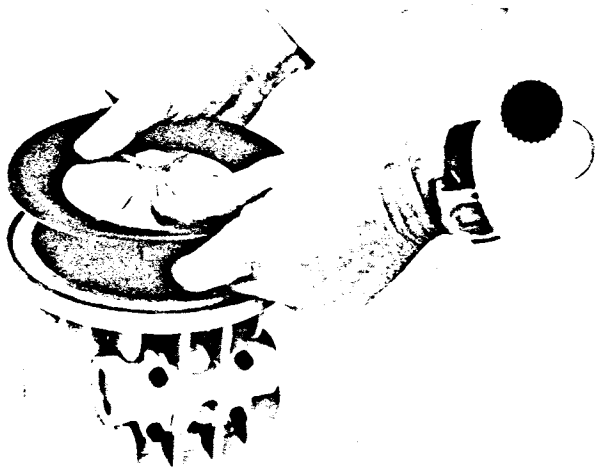

Figure 2B

To remove the diaphragms, turn the center assembly on end (see *Figure 2A)* and with a 3/4" wrench, remove the outer piston and the diaphragm. Remove the shaft and attached diaphragm from the center block *(Figure 2B).* To remove the diaphragm from the shaft, hold the outer rim of the diaphragm and loosen the diaphragm piston plate with the adjustable wrench. If the plate will not loosen, the shaft must be placed in a vise. **Protect the shaft from damage by using wood blocks or soft jaws in the vise.** The plate can now be easily removed with the adjustable wrench.
At this point of disassembly, all wetted parts of the pump are available for inspection or repair.
If inspection, and/or servicing, of the non-wetted air section is necessary, please see Section 3.

ASSEMBLY:

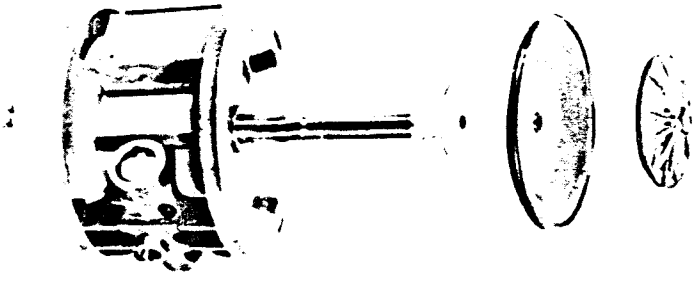

Figure 3A

STEP 1 (Rubber Diaphragms)

First, install diaphragm and inner and outer piston plates on shaft. Observe the "**this side out**" marking on the convex side of the diaphragm. Hand-tighten only at this time the outer piston to the shaft. Lubricate the center block bushing with a light oil (ISO 15-5 wt) and insert the shaft through the bushing until the outer bead of the diaphragm just touches the circumferential groove of the air chamber *(Figure 4A).* Install the opposite outer piston, diaphragm(s) and inner piston and tighten securely. Note: Pumps equipped with Teflon® diaphragms require that backup diaphragm (P/N 02-1060-56) be used. See *Figure 3B.*

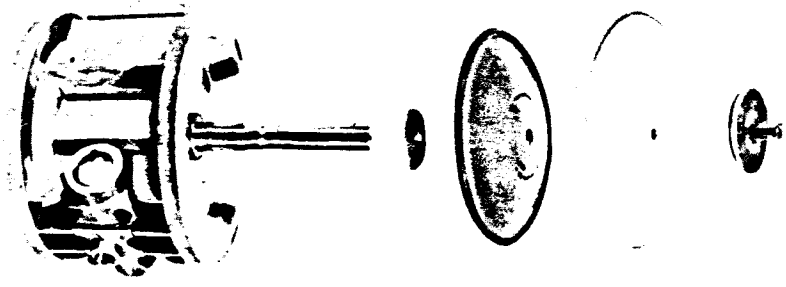

Figure 3B

(Teflon® Diaphragms)

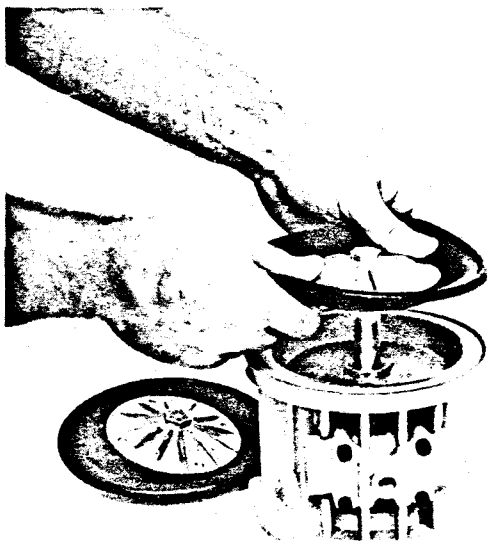

Figure 4A

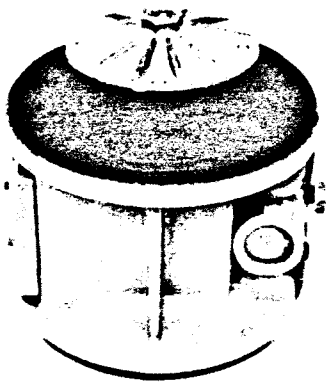

Figure 4B

STEP 2

Turn center section on its side. The diaphragm should be in full stroke position *(Figure 4B)*. Place outer chamber over diaphragm, being careful to align cast-in assembly marks. Press the diaphragm assembly down and install the other outer chamber in the same fashion. Tighten outer piston per the torque specifications* (Item #2/Metal).

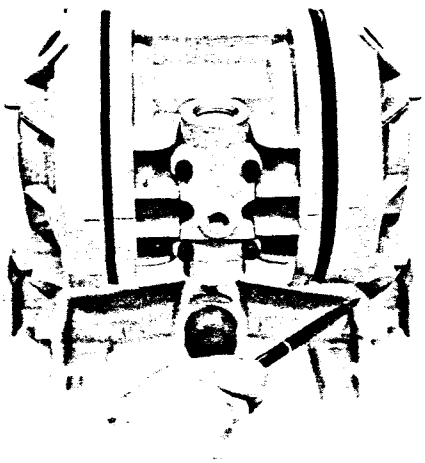

Figure 5A

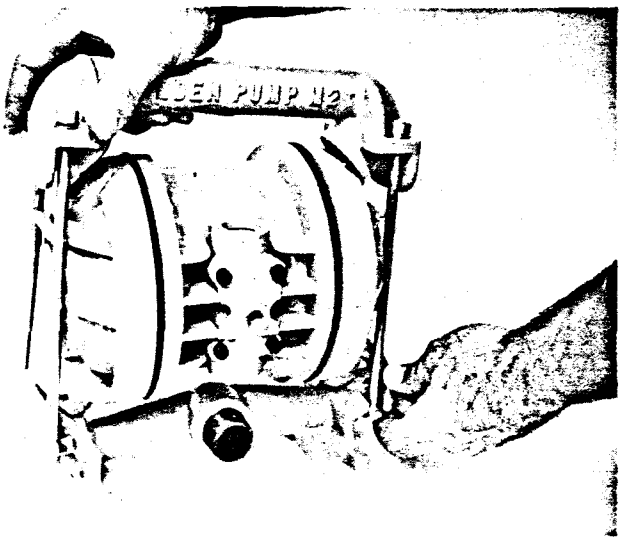

Figure 5B

Be sure to align outer chamber to inlet manifold very carefully to prevent leakage (both side to side and front to back, see *Figure 5A)*.

Next, install the four manifold bolts in the discharge manifold from the bottom side up and thread the nuts two or three turns.

When all four bolts have been installed, press down firmly on the discharge manifold with one hand and use the other hand to pull the two bolts on one side into their slots on the inlet housing, making sure the bolts snap over their guides on the water chamber. Next, fit the other two manifold bolts in the same manner.

Tighten down the bolts in a criss cross pattern, making sure that the alignment between the inlet housing and the water chambers and between the discharge manifold and water chambers is maintained. Tighten vertical manifold bolts per the torque specifications* (Item #6). Blow out air line for 10 to 20 seconds to make sure all pipeline debris is clear. Connect the air line and run pump dry. Good suction should be observed at inlet. Refer to pages 3 and 4 for proper suction lift figures.

*Refer to page 36 for torque specifications.

SECTION 6B
AIR VALVE/CENTER SECTION REPAIR/MAINTENANCE

The air valve assembly consists of the air valve body and piston. The unique design of the air valve relies only on differential pressure to cause the air valve to shift. It is reliable and simple to maintain. The bushing in the center block, along with the diaphragm shaft, provides the "trigger" to tell the air valve to shift. The following procedure will ensure that the air valve on your Wilden pump will provide long trouble-free service.

AIR VALVE BODY AND PISTON ASSEMBLY AND DISASSEMBLY

The air valve body and piston can be disconnected from the pump by removing the four socket-head cap screws which attach it to the center section. The piston in the air valve is aluminum with a dark anodized coating (see *Figure A*). The piston should move freely and the ports in the piston should line up with the ports on the face of the air valve body. The piston should also appear to be dull black in color. If the piston appears to be a shiny aluminum color, the air valve is probably worn beyond working tolerances and should be replaced.
If the piston does not move freely in the air valve, the entire air valve should be immersed in a cleaning solution. (NOTE: Do not force the piston by inserting a metal object.) This soaking should remove any accumulation of sludge and grit which is preventing the air valve piston from moving freely. If the air valve piston does not move freely after the above cleaning, the air valve should be disassembled as follows: Remove the snap ring from the top end of the air valve and apply an air jet alternately to the two holes located in the face of the air valve until the end cap is blown out. (See *Figure B.*) **[CAUTION:** The air valve end cap may come out with considerable force. Hand protection such as a padded glove or a rag should be used to capture the end cap.] Inspect the piston and cylinder bore for nicks and scoring.

Small nicks can usually be dressed out and the piston returned to service. Inspect the cylinder end caps. Make sure that the guide pin is straight and smooth or the piston will not move freely in the cylinder. New O-rings should be installed on the end caps. Lubricate the O-rings and install the end caps, assuring that proper alignment of the piston and cylinder ports is maintained. Use an oil with arctic characteristics (ISO 15-5wt).

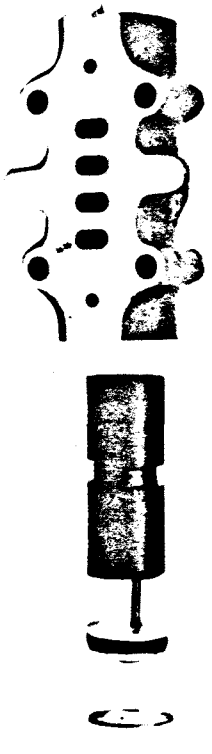

Figure A

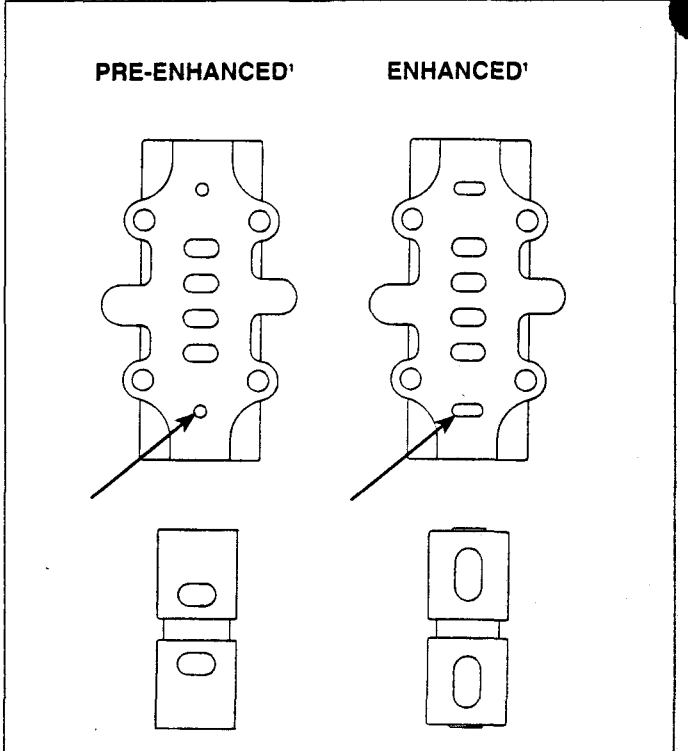

1. Air valves are retrofittable on pre-enhanced and enhanced center sections.

Figure B

O-RING REPLACEMENT/ CENTER SECTION

The pump's center section consists of a molded housing with a bronze bushing. (Bushing is not removable.) This bushing has grooves cut into the inside diameter. O-rings are installed in these grooves. When the O-rings become worn or flat, they will no longer seal and must be replaced. This is most easily accomplished by using a tool called an O-ring pick, available through most industrial supply companies.

There are two versions of center sections: PRE-ENHANCED and ENHANCED. An encircled letter "E" stamped on the top of the center section denotes the ENHANCED type center section *(Figure C).*

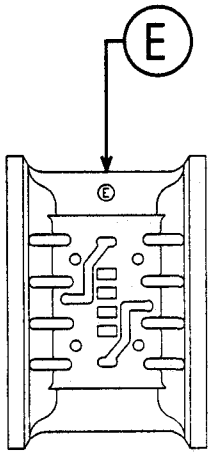

Figure C

If the encircled "E" is present, an enhanced (02-4000-09 or 02-4050-09) shaft should be utilized to maximize performance. The center section O-rings (02-3200-52) must be installed in the appropriate grooves as shown (1, 3, 6, 8).

ENHANCED SHAFT

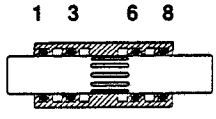

ENHANCED CONFIGURATION

If the encircled "E" is not present, a pre-enhanced shaft (81A or T81A) must be utilized. An enhanced (non-dented) shaft will not function correctly. The center section O-rings (02-3200-52) must be installed in the appropriate grooves as shown (1, 3, 4, 6).

PRE-ENHANCED SHAFT

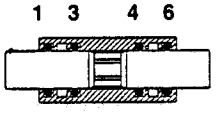

PRE-ENHANCED CONFIGURATION

*Refer to page 36 for torque specifications.

Inspect the air valve side of the center section for flatness and to insure no nicks or other damage exists that would prevent the air valve from sealing when installed. Inspect the two channels and their ports to make sure they are clean and the ports are open to the bushing. The air valve will not shift if these ports are plugged or an O-ring is in the wrong groove of the center section closing off a port. Inspect the air valve gasket and muffler plate gasket and replace if damaged. Attach the air valve to the center section (see *Figure D).* Tighten air valve bolts per the torque specifications* (Item #1).

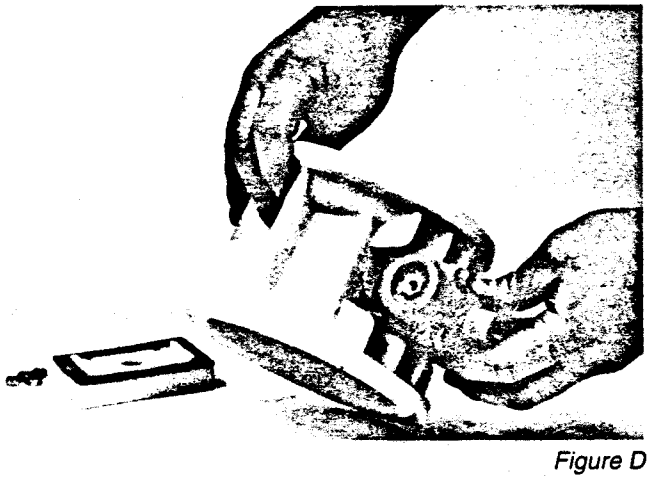

Figure D

SECTION 6C

DIRECTIONS FOR DISASSEMBLY/REASSEMBLY

MODEL M2R CHAMP (Plastic)

CAUTION: Before any maintenance or repair is attempted, the compressed air line to the pump should be disconnected and all air pressure allowed to bleed from pump. Disconnect all intake, discharge, and air lines. Drain the pump by turning it upside down and allowing any fluid to flow into a suitable container.

The Wilden model M2R is an air-operated, double-diaphragm pump with all wetted parts of polypropylene or PVDF. The single-piece center section, consisting of center block and air chambers, is molded from polypropylene. All fasteners and hardware are stainless steel. The air valve is brass. All O-rings used in the pump are of special materials and should only be replaced with factory-supplied parts.

PLEASE read all directions before starting disassembly.

DISASSEMBLY

Before actual disassembly is started, turn pump upside down and drain all liquid trapped in the pump into a suitable container. Be sure to use proper caution if liquid is corrosive or toxic. Mark each liquid chamber to its respective air chamber for easy alignment during reassembly.

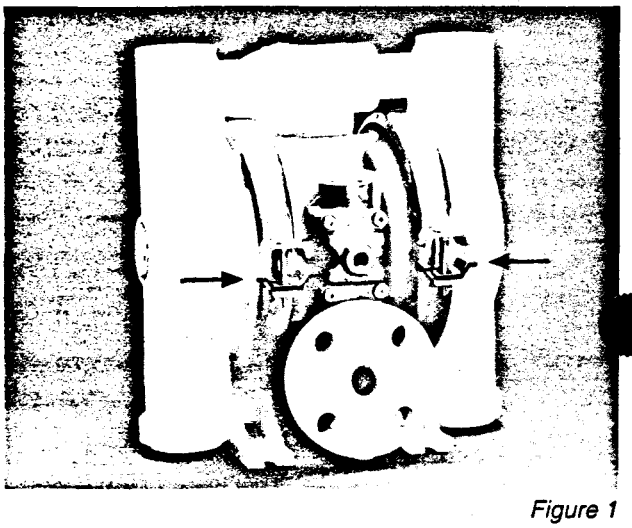

Figure 1

STEP 1

Remove top retainer with ½" drive socket wrench *(Figure 2)*. Remove valve ball and pry out valve seat. Inspect valve seat, valve ball, retainer, and O-rings *(Figure 3)*. If swelling, cracking or other damage is apparent, these parts must be replaced.

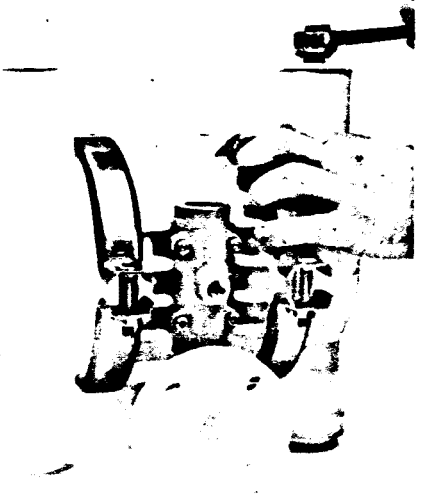

Figure 2

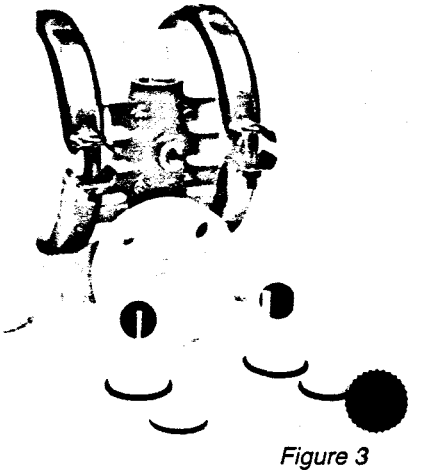

Figure 3

STEP 2

Turn pump upside down, loosen and remove bottom retainer *(Figure 4)*. Pry out valve seat and remove along with valve ball. Inspect valve seat, valve ball, retainer and O-rings *(Figure 5)*. If swelling, cracking or other damage is apparent, these parts must be replaced.

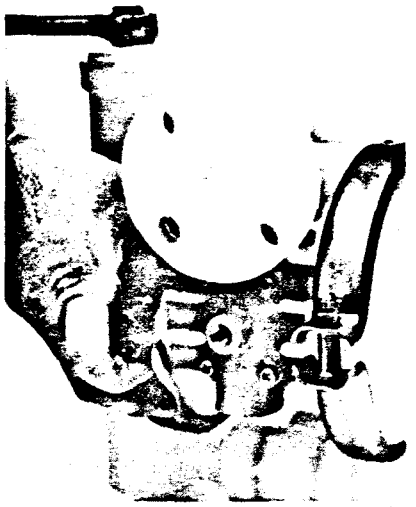

Figure 4

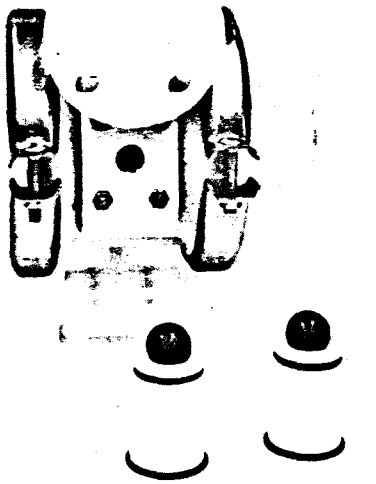

Figure 5

STEP 3

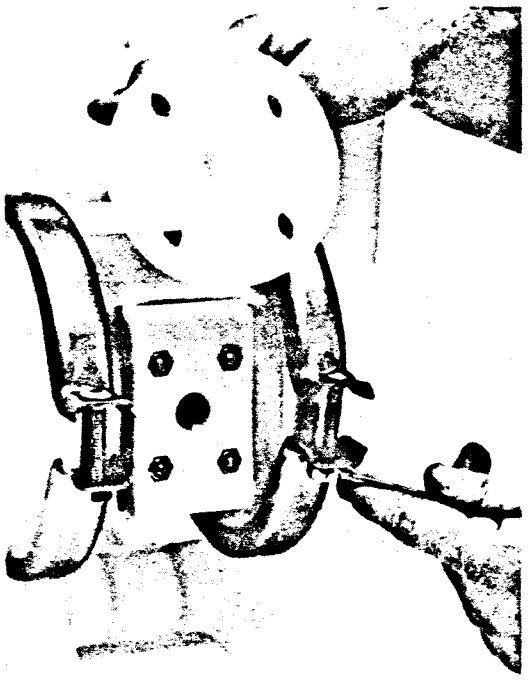

Figure 6

Figure 7

Loosen clamp band with ½" box end wrench *(Figure 6)*. Rotate clamp bands and remove *(Figure 7)*.

STEP 4

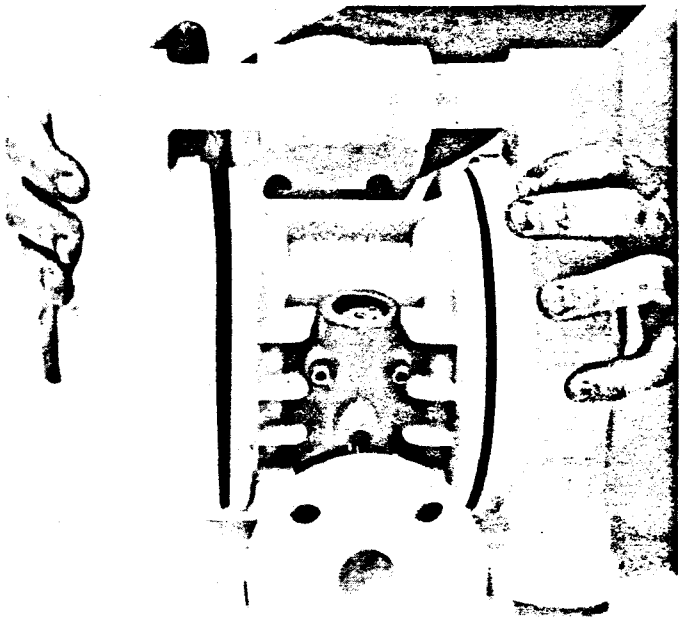

Figure 8

After clamp bands are removed pull chambers apart *(Figure 8).*

STEP 5

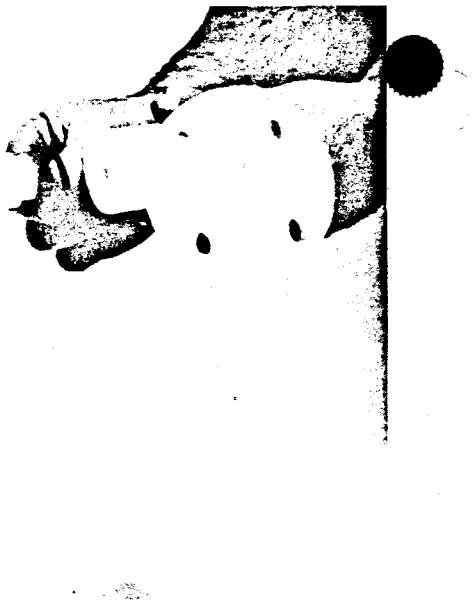

Figure 9

Pull tee section from liquid chamber and inspect O-ring *(Figure 9).*

STEP 6

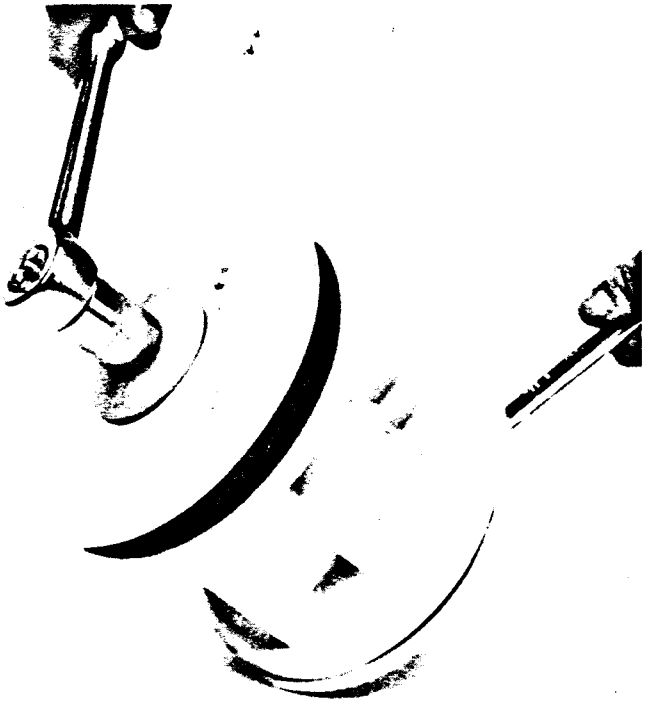

Figure 10

Figure 11

Loosen outer piston *(Figure 10)* and remove. Use 1" socket for rubber diaphragms and ⅞" socket for Teflon® diaphragms. Remove the shaft and attached diaphragm from center section. Hold shaft and remove outer piston *(Figure 11).* Inspection of diaphragms, inner pistons and outer pistons is now possible.

NOTE: IF UNABLE TO REMOVE OUTER PISTON BY HOLDING SHAFT, PLACE SHAFT IN A VISE, PROTECT THE SHAFT FROM DAMAGE BY USING WOOD BLOCKS OR SOFT JAWS IN THE VISE.

REASSEMBLY

STEP 1

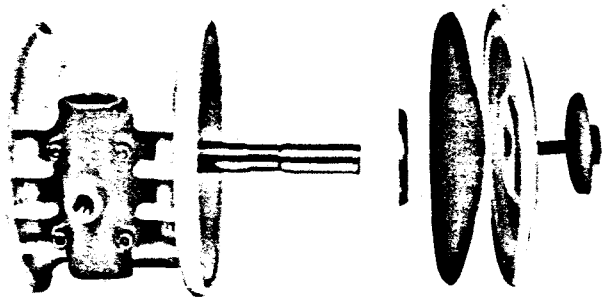

Figure 12

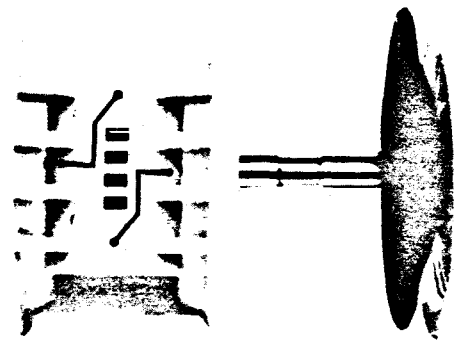

Figure 13

Insert outer piston through diaphragm, back-up diaphragm*, and inner piston *(Figure 12).* Tighten this assembly to shaft. Lubricate bushing with ISO 15-5 wt. oil and push shaft through bushing *(Figure 13).*

*Note: Back-up diaphragm included on models with Teflon® diaphragms only.

STEP 2

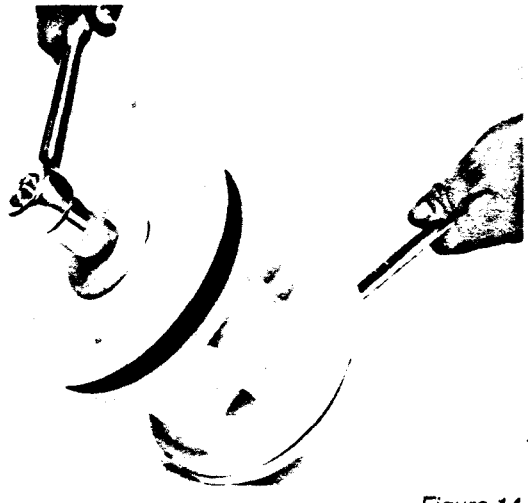

Figure 14

Install opposite outer piston, diaphragms, and inner piston and tighten per the torque specifications* (Item #2) *(Figure 14).*

STEP 3

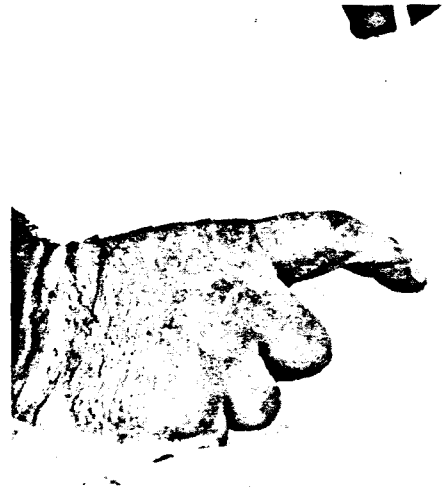

Figure 15

For models fitted with Teflon® diaphragms expanded Teflon® gasket material is required. Select a strip ¼" wide and 20" in length. Install material in liquid chamber diaphragm bead grooves to ensure positive sealing *(Figure 15).*

*Refer to page 20 for torque specifications.

STEP 4

Place O-ring, then tee section on liquid chamber *(Figure 16).*

Figure 16

STEP 5

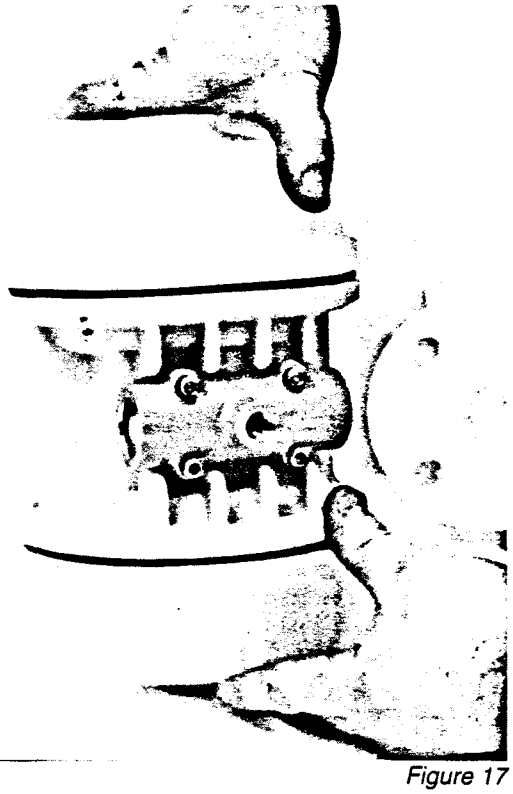

Figure 17

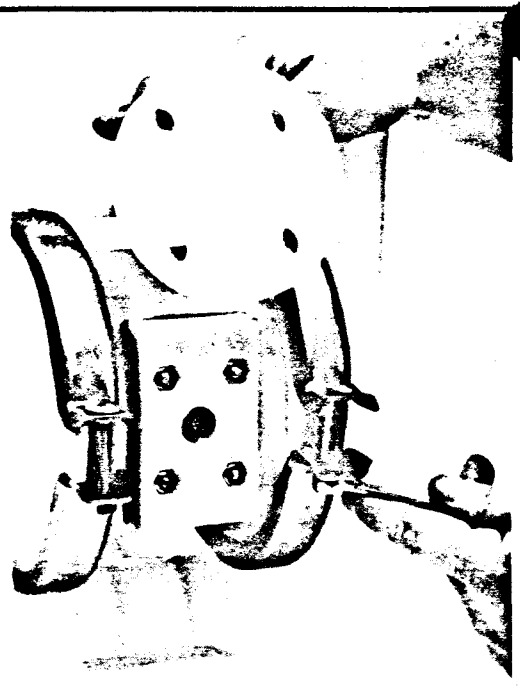

Figure 18

Attach liquid chambers to center section *(Figure 17).* **A C-CLAMP CAN BE UTILIZED TO EXPEDITE ASSEMBLY.** Put clamp bands in place and tighten per the torque specifications* (Item #5) *(Figure 18).*

*Refer to page 36 for torque specifications.

STEP 6

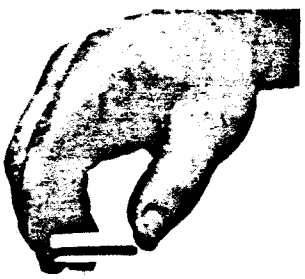

Figure 19

Figure 20

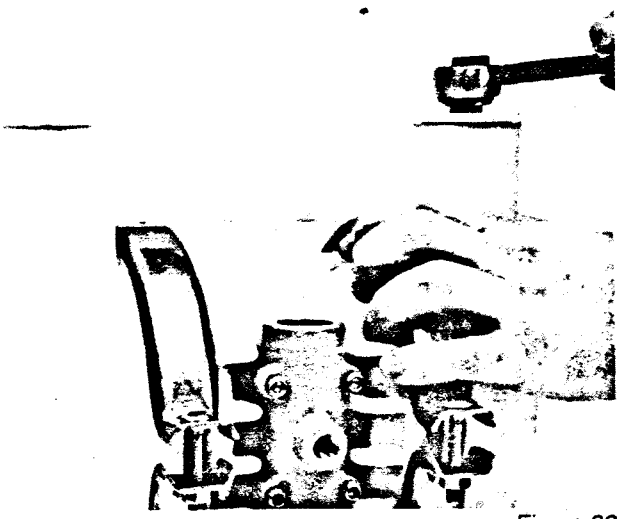

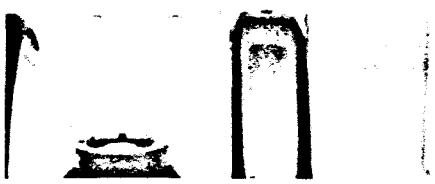

Figure 21

Figure 22

Insert valve seat, (note the O-ring placement in *Figure 19),* valve ball *(Figure 20),* and retainer *(Figure 21)* in the top of liquid chamber. Tighten top retainer per the torque specifications* (Item #3) *(Figure 22).*

*Refer to page 36 for torque specifications.

STEP 7

Figure 23

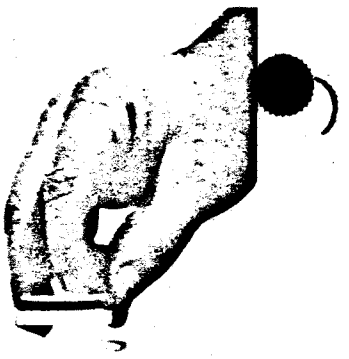

Figure 24

Figure 25

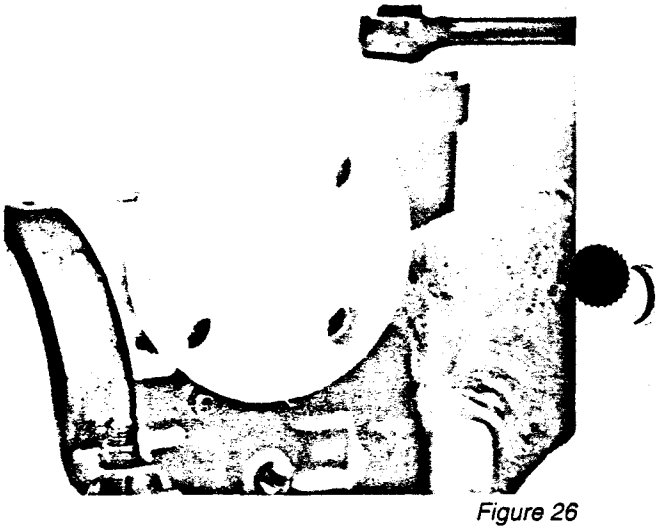

Figure 26

Turn pump upside down and insert valve ball *(Figure 23)*, valve seat (note the O-ring placement in *Figure 24)*, and retainer *(Figure 25)*. Tighten retainer per the torque specifications* (Item #3) *(Figure 26)*. Blow out air line for 10 to 20 seconds to make sure all pipeline debris is clear. Connect air line and run pump dry. Good suction should be observed at inlet.

*Refer to page 36 for torque specifications.

SECTION 6D
AIR VALVE/CENTER SECTION REPAIR/MAINTENANCE

The air valve assembly consists of the air valve body and piston. The unique design of the air valve relies only on differential pressure to cause the air valve to shift. It is reliable and simple to maintain. The bushing in the center block, along with the diaphragm shaft, provides the "trigger" to tell the air valve to shift. The following procedure will ensure that the air valve on your Wilden pump will provide long trouble-free service.

AIR VALVE BODY AND PISTON ASSEMBLY AND DISASSEMBLY

The air valve body and piston can be disconnected from the pump by removing the four socket-head cap screws which attach it to the center section. The piston in the air valve is aluminum with a dark anodized coating (see *Figure A*). The piston should move freely and the ports in the piston should line up with the ports on the face of the air valve body. The piston should also appear to be dull black in color. If the piston appears to be a shiny aluminum color, the air valve is probably worn beyond working tolerances and should be replaced.
If the piston does not move freely in the air valve, the entire air valve should be immersed in a cleaning solution. (NOTE: Do not force the piston by inserting a metal object.) This soaking should remove any accumulation of sludge and grit which is preventing the air valve piston from moving freely. If the air valve piston does not move freely after the above cleaning, the air valve should be disassembled as follows: Remove the snap ring from the top end of the air valve and apply an air jet alternately to the two holes located in the face of the air valve until the end cap is blown out. (See *Figure B.)* **[CAUTION:** The air valve end cap may come out with considerable force. Hand protection such as a padded glove or a rag should be used to capture the end cap.] Inspect the piston and cylinder bore for nicks and scoring.

Small nicks can usually be dressed out and the piston returned to service. Inspect the cylinder end caps. Make sure that the guide pin is straight and smooth or the piston will not move freely in the cylinder. New O-rings should be installed on the end caps. Lubricate the O-rings and install the end caps, assuring that proper alignment of the piston and cylinder ports is maintained. *Use an oil with arctic characteristics* (ISO 15-5wt).

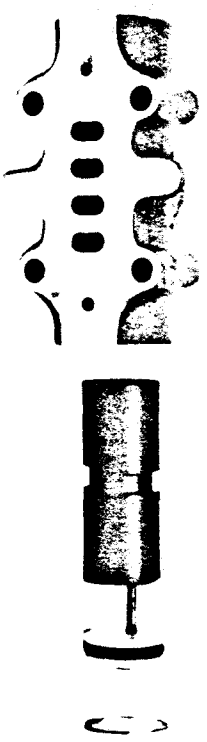

Figure A

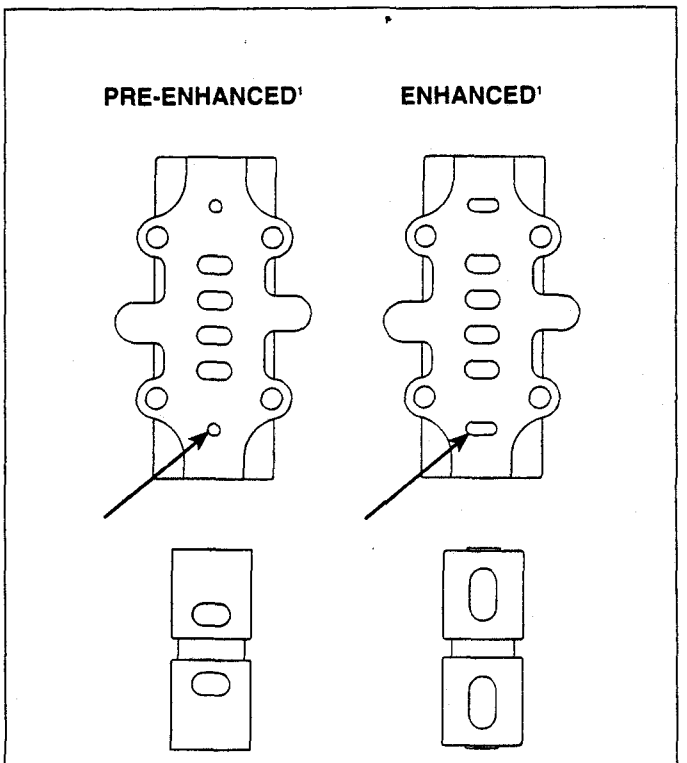

1. Air valves are retrofittable on pre-enhanced and enhanced center sections.

Figure B

O-RING REPLACEMENT/ CENTER SECTION

The pump's center section consists of a molded housing with a bronze bushing. (Bushing is not removable.) This bushing has grooves cut into the inside diameter. O-rings are installed in these grooves. When the O-rings become worn or flat, they will no longer seal and must be replaced. This is most easily accomplished by using a tool called an O-ring pick, available through most industrial supply companies.

There are two versions of center sections: PRE-ENHANCED and ENHANCED. An encircled letter "E" stamped on the top of the center section denotes the ENHANCED type center section *(Figure C).*

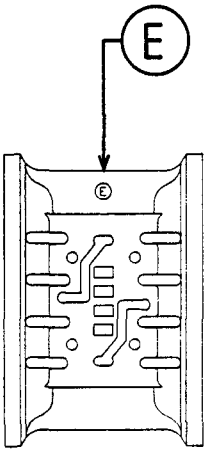

Figure C

If the encircled "E" is present, an enhanced (02-4000-09 or 02-4050-09) shaft should be utilized to maximize performance. *The center section O-rings (02-3200-52) must be installed in* the appropriate grooves as shown (1, 3, 6, 8).

ENHANCED SHAFT

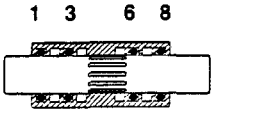

ENHANCED CONFIGURATION

Please contact your local authorized distributor for enhanced air distribution retrofit packages.

If the encircled "E" is not present, a pre-enhanced shaft (81A or T81A) must be utilized. An enhanced (non-dented) shaft will not function correctly. The center section O-rings (02-3200-52) must be installed in the appropriate grooves as shown (1, 3, 4, 6).

PRE-ENHANCED SHAFT

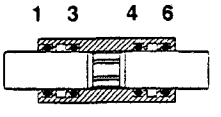

PRE-ENHANCED CONFIGURATION

*Refer to page 36 for torque specifications.

Inspect the air valve side of the center section for flatness and to insure no nicks or other damage exists that would prevent the air valve from sealing when installed. Inspect the two channels and their ports to make sure they are clean and the ports are open to the bushing. The air valve will not shift if these ports are plugged or an O-ring is in the wrong groove of the center section closing off a port. Inspect the air valve gasket and muffler plate gasket and replace if damaged. Attach the air valve to the center section. Tighten air valve bolts per the torque specifications* (see *Figure D).*

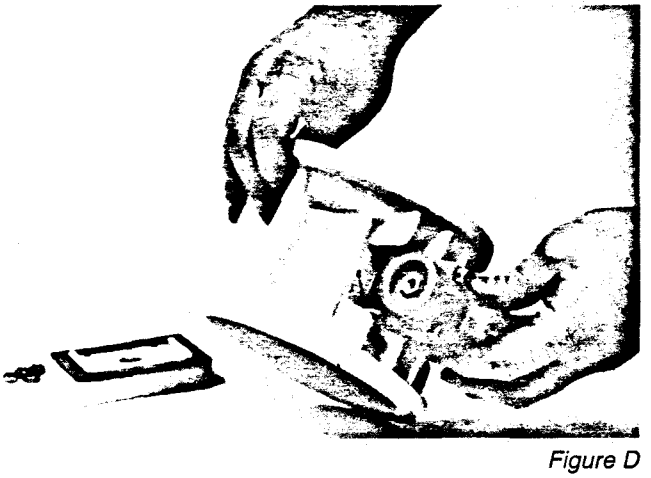

Figure D

NOTES

M2
METAL
AIR-OPERATED

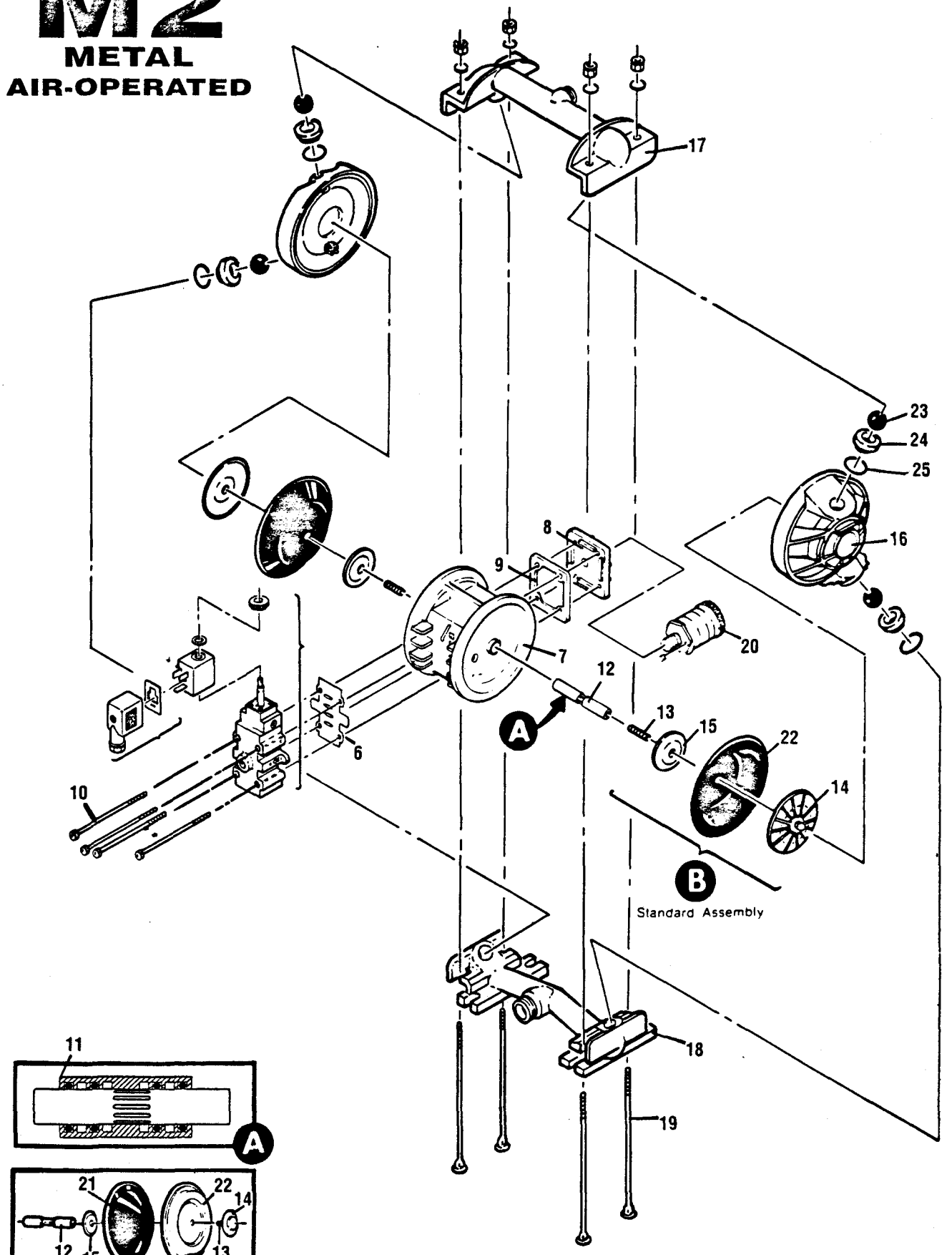

NOTE: Teflon Diaphragm Models Assembled With Teflon Gasket Kit At Factory (Not Shown)

MODEL M2 METAL AIR-OPERATED RUBBER/TPE-FITTED PUMPS

Item	Description	Qty. Per Pump	M2/OO P/N	M2/BO P/N	M2/SO P/N	M2/HO P/N	M2/SGR P/N	M2/OA P/N	M2/OB P/N	M2/OS P/N	M2/OH P/N
1	Air Valve (Body & Piston)	1	02-2000-07	02-2000-07	02-2000-07	02-2000-07	02-2000-06	02-2000-07	02-2000-07	02-2000-07	02-2000-07
2	Air Valve Cap wo/Guide (Bottom)	1	02-2350-23	02-2350-23	02-2350-23	02-2350-23	02-2350-23	02-2350-23	02-2350-23	02-2350-23	02-2350-23
3	Air Valve Cap w/Guide (Top)	1	02-2340-23	02-2340-23	02-2340-23	02-2340-23	02-2340-23	02-2340-23	02-2340-23	02-2340-23	02-2340-23
4	Snap Ring	2	S80T	S80T	S80T	S80T	S80T	S80T	S80T	S80T	S80T
5	Air Valve Cap O-Ring	2	2D	2D	2D	2D	2D	2D	2D	2D	2D
6	Air Valve Gasket — Buna	1	02-2600-52	02-2600-52	02-2600-52	02-2600-52	02-2600-52	02-2600-52	02-2600-52	02-2600-52	02-2600-52
7	Center Section	1	02-3151-20	02-3151-20	02-3151-20	02-3151-20	02-3150-01	02-3150-01	02-3150-01	02-3150-01	02-3150-01
8	Muffler Plate	1	02-3180-20	02-3180-20	02-3180-20	02-3180-20	02-3180-20	80M	80M	80M	80M
9	Muffler Plate Gasket — Buna	1	02-3500-52	02-3500-52	02-3500-52	02-3500-52	02-3500-52	02-3510-52	02-3510-52	02-3510-52	02-3510-52
10	Air Valve Screws	4	S80AS	S80AS	S80AS	S80AS	S80AS	80AS	S80AS	S80AS	S80AS
11	Center Section O-Ring	4	02-3200-52	02-3200-52	02-3200-52	02-3200-52	02-3200-52	02-3200-52	02-3200-52	02-3200-52	02-3200-52
12	Shaft	1	02-4000-09	02-4000-09	02-4000-09	02-4000-09	02-4000-09	02-4000-09	02-4000-09	02-4000-09	02-4000-09
13	Stud	2	81F	81F	81F	81F	81F	81F	81F	81F	81F
14	Pistons — Outer	2	B81B	B81B	S81B	H81B	S81B	B81B	B81B	S81B	H81B
15	Pistons — Inner	2	81C	81C	81C	81C	81C	81C	81C	81C	81C
16	Water Chamber	2	85	85	S85	H85	S85	85	85	S85	H85
17	Discharge Manifold	1	86	B86	S86	H86	SG86	86	B86	S86	H86
18	Inlet Housing	1	87	B87	S87	H87	SG87	87	B87	S87	H87
19	Manifold Bolt	4	84A	S84A	S84A	S84A	S84A	84A	S84A	S84A	S84A
20	Muffler	1	70C	70C	70C	70C	70C	70C	70C	70C	70C
21	Back-up Diaphragm**	2	N/R	N/R	N/R	N/R	N/R	N/R	N/R	N/R	N/R
22	Diaphragm*	2	*	*	*	*	FG83	*	*	*	*
23	Valve Balls*	4	*	*	*	*	FG91	*	*	*	*
24	Valve Seat	4	A90	A90	S90	H90	S90	A90	A90	S90	H90
25	Valve Seat O-Ring*	4	*	*	*	*	FG90B	*	*	*	*
26	Hex Nut 1/4-20, S.S.*** (Not Shown)	4	S62C	S62C	S62C	S62C	S62C	NA	NA	NA	NA
27	Manifold Bolt Washer	4	68B	S84C	S84C	S84C	SP30C	68B	S84C	S84C	S84C
28	Manifold Bolt Nut	4	84B	S84B	S84B	S84B	SP84WN	84B	S84B	S84B	S84B

Refer to page #16 prior to ordering these parts.
*Refer to corresponding elastomer chart for metal pumps on page 36.
**Required only for Teflon® fitted pumps.
***Part to be used with P/N S80AS to secure air valve and muffler plate.
NOTE: Models SGR and SNR have 1.5" cast tri-clamp inlet and outlet ports and use wing nut type fasteners on manifold bolts.

MODEL M2 METAL AIR-OPERATED TEFLON®-FITTED PUMPS

Item	Description	Qty. Per Pump	M2/TO P/N	M2/BT P/N	M2/ST P/N	M2/HT P/N	M2/SNR P/N	M2/OT P/N	M2/TB P/N	M2/TS P/N	M2/TH P/N
1	Air Valve (Body & Piston)	1	02-2000-07	02-2000-07	02-2000-07	02-2000-07	02-2000-00	02-2000-07	02-2000-07	02-2000-07	02-2000-07
2	Air Valve Cap wo/Guide (Bottom)	1	02-2350-23	02-2350-23	02-2350-23	02-2350-23	02-2350-23	02-2350-23	02-2350-23	02-2350-23	02-2350-23
3	Air Valve Cap w/Guide (Top)	1	02-2340-23	02-2340-23	02-2340-23	02-2340-23	02-2340-23	02-2340-23	02-2340-23	02-2340-23	02-2340-23
4	Snap Ring	2	80T	S80T	S80T	S80T	S80T	80T	S80T	S80T	S80T
5	Air Valve Cap O-Ring	2	2D	2D	2D	2D	2D	2D	2D	2D	2D
6	Air Valve Gasket — Buna	1	02-2600-52	02-2600-52	02-2600-52	02-2600-52	02-2600-52	02-2600-52	02-2600-52	02-2600-52	02-2600-52
7	Center Section	1	02-3151-20	02-3151-20	02-3151-20	02-3151-20	02-3150-01	02-3150-01	02-3150-01	02-3150-01	02-3150-01
8	Muffler Plate	1	02-3180-20	02-3180-20	02-3180-20	02-3180-20	02-3180-20	80M	80M	80M	80M
9	Muffler Plate Gasket — Buna	1	02-3500-52	02-3500-52	02-3500-52	02-3500-52	02-3500-52	02-3510-52	02-3510-52	02-3510-52	02-3510-52
10	Air Valve Screws	4	80AS	S80AS	S80AS	S80AS	S80AS	S80AS	S80AS	S80AS	S80AS
11	Center Section O-Ring	4	02-3200-52	02-3200-52	02-3200-52	02-3200-52	02-3200-52	02-3200-52	02-3200-52	02-3200-52	02-3200-52
12	Shaft	1	02-4050-09	02-4050-09	02-4050-09	02-4050-09	02-4050-09	02-4050-09	02-4050-09	02-4050-09	02-4050-09
13	Stud (M2/TO: Bolt)	2	81AN	81F	81F	81F	81F	81AN	81F	81F	81F
14	Pistons — Outer	2	T81B	ST81B	ST81B	HT81B	ST81B	T81B	ST81B	ST81B	HT81B
15	Pistons — Inner	2	T81C	T81C	T81C	T81C	T81C	T81C	T81C	T81C	T81C
16	Water Chamber	2	85	85	S85	H85	S85	85	85	S85	H85
17	Discharge Manifold	1	86	B86	S86	H86	SG86	86	B86	S86	H86
18	Inlet Housing	1	87	B87	S87	H87	SG87	87	B87	S87	H87
19	Manifold Bolt	4	S84A	S84A	S84A	S84A	S84A	S84A	S84A	S84A	S84A
20	Muffler	1	70C	70C	70C	70C	70C	70C	70C	70C	70C
21	Back-up Diaphragm*	2	02-1060-56	02-1060-56	02-1060-56	02-1060-56	02-1060-56	02-1060-56	02-1060-56	02-1060-56	02-1060-56
22	Diaphragm	2	TF83	TF83	TF83	TF83	TF83	TF83	TF83	TF83	TF83
23	Valve Balls	4	TF91	TF91	TF91	TF91	TF91	TF91	TF91	TF91	TF91
24	Valve Seat	4	A90	A90	S90	H90	S90	A90	A90	S90	H90
25	Valve Seat O-Ring	4	90T	90T	90T	90T	90T	90T	90T	90T	90T
26	Hex Nut 1/4-20, S.S.** (Not Shown)	4	S62C	S62C	S62C	S62C	S62C	NA	NA	NA	NA
27	Manifold Bolt Washer	4	S84C	S84C	S84C	S84C	SP30C	S84C	S84C	S84C	S84C
28	Manifold Bolt Nut	4	S84B	S84B	S84B	S84B	SP84WN	S84B	S84B	S84B	S84B

Refer to page #16 prior to ordering these parts.
*Required only for Teflon® fitted pumps. Neoprene back-up diaphragms, P/N TF83B, are available upon request. Please consult your local distributor.
**Part to be used with P/N S80AS to secure air valve and muffler plate.
NOTE: Models SGR and SNR have 1.5" cast tri-clamp inlet and outlet ports and use wing nut type fasteners on manifold bolts.

M2
METAL SOLENOID-OPERATED

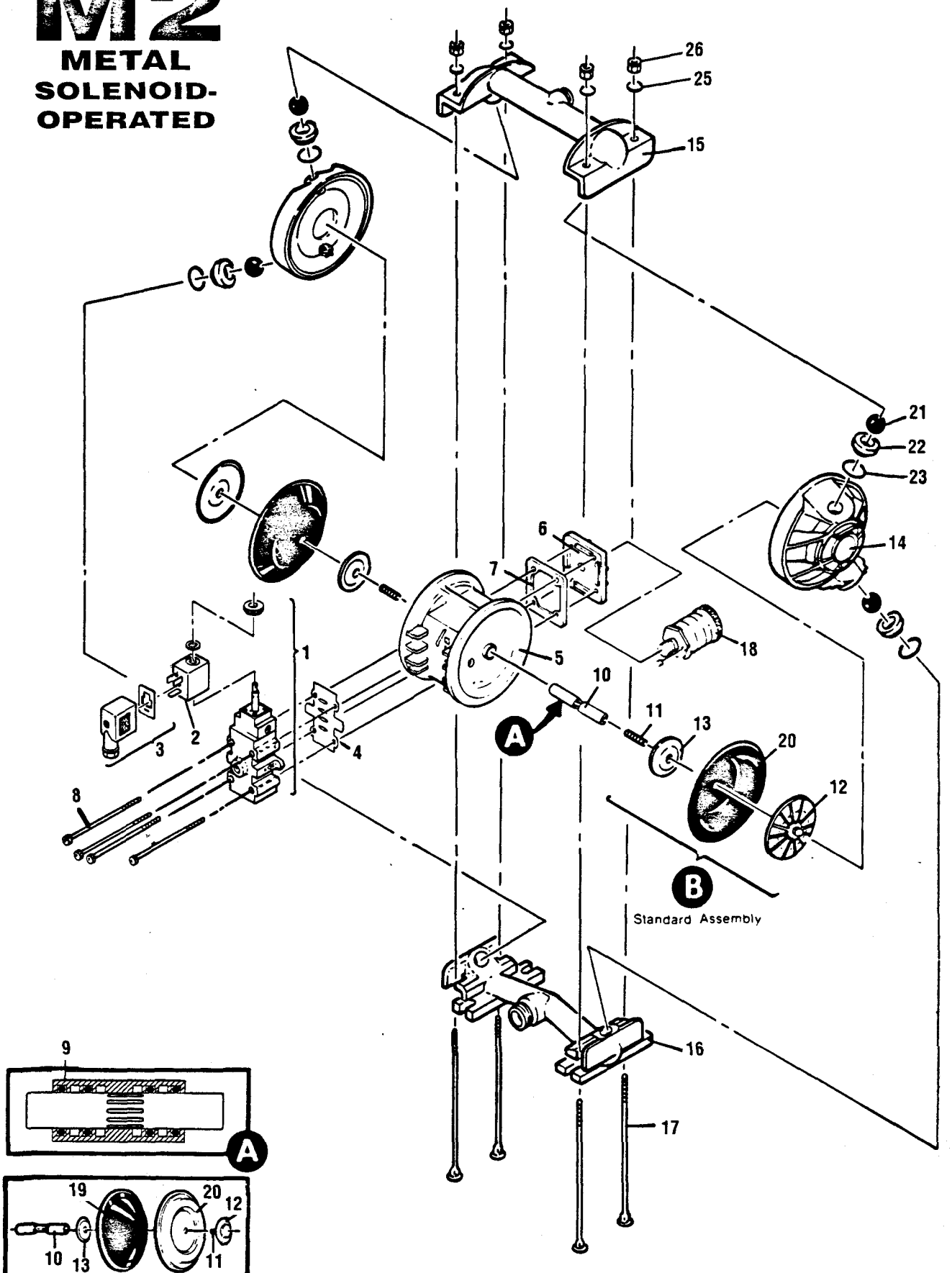

NOTE: Teflon Diaphragm Models Assembled With Teflon Gasket Kit At Factory (Not Shown)

MODEL M2 METAL SOLENOID-OPERATED RUBBER/TPE-FITTED PUMPS

								TEFLON®-FITTED PUMPS				
Item	Description	Qty. Per Pump	M2/OO__[1] P/N	M2/BO__[1] P/N	M2/SO__[1] P/N	M2/HO__[1] P/N	M2/SGR__[1] P/N	M2/TO__[1] P/N	M2/BT__[1] P/N	M2/ST__[1] P/N	M2/HT__[1] P/N	M2/SNR__[1] P/N
	Solenoid Valve Assembly	1	See table below					See table below				
1	Main Valve Assembly	1	See table below					See table below				
2	Coil	1	See table below					See table below				
3	Terminal Connector	1	00-2130-99	00-2130-99	00-2130-99	00-2130-99	00-2130-99	00-2130-99	00-2130-99	00-2130-99	00-2130-99	00-2130-99
4	Air Valve Gasket — Buna	1	02-2600-52	02-2600-52	02-2600-52	02-2600-52	02-2600-52	02-2600-52	02-2600-52	02-2600-52	02-2600-52	02-2600-52
5	Center Section	1	02-3151-20	02-3151-20	02-3151-20	02-3151-20	02-3151-20	02-3151-20	02-3151-20	02-3151-20	02-3151-20	02-3151-20
6	Muffler Plate	1	02-3180-20	02-3180-20	02-3180-20	02-3180-20	02-3180-20	02-3180-20	02-3180-20	02-3180-20	02-3180-20	02-3180-20
7	Muffler Plate Gasket — Buna	1	02-3500-52	02-3500-52	02-3500-52	02-3500-52	02-3500-52	02-3500-52	02-3500-52	02-3500-52	02-3500-52	02-3500-52
8	Air Valve Screws	4	S80AS	S80AS	S80AS	S80AS	S80AS	80AS	S80AS	S80AS	S80AS	S80AS
9	Center Section O-Ring	4	02-3200-52	02-3200-52	02-3200-52	02-3200-52	02-3200-52	02-3200-52	02-3200-52	02-3200-52	02-3200-52	02-3200-52
10	Shaft	1	02-4000-09	02-4000-09	02-4000-09	02-4000-09	02-4000-09	02-4000-09	02-4000-09	02-4000-09	02-4000-09	02-4000-09
11	Stud	2	81F	81F	81F	81F	81F	81AN	81F	81F	81F	81F
12	Pistons — Outer	2	B81B	B81B	S81B	H81B	S81B	T81B	ST81B	ST81B	HT81B	ST81B
13	Pistons — Inner	2	81C	81C	81C	81C	81C	T81C	T81C	T81C	T81C	T81C
14	Water Chamber	2	85	85	S85	H85	S85	85	85	S85	H85	S85
15	Discharge Manifold	1	86	B86	S86	H86	SG86	86	B86	S86	H86	SG86
16	Inlet Housing	1	87	B87	S87	H87	SG87	87	B87	S87	H87	SG87
17	Manifold Bolt	4	84A	S84A	S84A	S84A	S84A	S84A	S84A	S84A	S84A	S84A
18	Muffler	1	70C	70C	70C	70C	70C	70C	70C	70C	70C	70C
19	Back-up Diaphragm**	2	N/R	N/R	N/R	N/R	N/R	02-1060-56	02-1060-56	02-1060-56	02-1060-56	02-1060-56
20	Diaphragm*	2	*	*	*	*	FG83	TF83	TF83	TF83	TF83	TF83
21	Valve Balls*	4	*	*	*	*	FG91	TF91	TF91	TF91	TF91	TF91
22	Valve Seat	4	A90	A90	S90	H90	S90	A90	A90	S90	H90	S90
23	Valve Seat O-Ring*	4	*	*	*	*	FG90B	90T	90T	90T	90T	90T
24	Hex Nut 1/4-20. S.S.*** (Not Shown)	4	S62C	S62C	S62C	S62C	S62C	S62C	S62C	S62C	S62C	S62C
25	Manifold Bolt Washer	4	68B	S84C	S84C	S84C	SP30C	S84C	S84C	S84C	S84C	SP30C
26	Manifold Bolt Nut	4	84B	S84B	S84B	S84B	SP84WN	S84B	S84B	S84B	S84B	SP84WN

*Refer to corresponding elastomer chart for metal pumps on page 36.
**Required only for Teflon® fitted pumps.
***Part to be used with P/N S80AS to secure air valve and muffler plate.
NOTE: Models SGR and SNR have 1.5" cast tri-clamp inlet and outlet ports and use wing nut type fasteners on manifold bolts. (Food Processing pumps.)

VALVE ASSEMBLY OPTIONS (CONSISTS OF VALVE BODY, COIL AND CONNECTOR)

Pump Models	Suffix[2]	Part Number	Description
OOI, BOI, SOI, HOI, SGRI, TOI, BTI, STI, HTI, SNRI	—	02-2060-99	24V AC / 12V DC Valve Assembly
OOI, BOI, SOI, HOI, SGRI, TOI, BTI, STI, HTI, SNRI	EX	02-2060-99-153	24V AC / 12V DC Valve Assembly (Nema 7)
OOE, BOE, SOE, HOE, SGRE, TOE, BTE, STE, HTE, SNRE	—	02-2040-99	24V DC Valve Assembly
OOE, BOE, SOE, HOE, SGRE, TOE, BTE, STE, HTE, SNRE	EX	02-2040-99-154	24V DC Valve Assembly (Nema 7)
OOU, BOU, SOU, HOU, SGRU, TOU, BTU, STU, HTU, SNRU	—	02-2060-99-155	110V AC Valve Assembly
OOU, BOU, SOU, HOU, SGRU, TOU, BTU, STU, HTU, SNRU	EX	02-2060-99-156	110V AC Valve Assembly (Nema 7)

ITEM 1 MAIN VALVE BODY OPTIONS

Pump Model Suffix[2]	Part Number	Description
—	02-2040-01	Main Valve Body
EX	02-2040-01-154	Main Valve Body (Nema 7)

ITEM 2 COIL OPTIONS

Pump Models	Suffix[2]	Part Number	Description
OOI, BOI, SOI, HOI, SGRI, TOI, BTI, STI, HTI, SNRI	—	02-2110-99	24V AC / 12V DC Coil
OOI, BOI, SOI, HOI, SGRI, TOI, BTI, STI, HTI, SNRI	EX	02-2110-99-153	24V AC / 12V DC Coil (Nema 7)
OOE, BOE, SOE, HOE, SGRE, TOE, BTE, STE, HTE, SNRE	—	02-2120-99	24V DC Coil
OOE, BOE, SOE, HOE, SGRE, TOE, BTE, STE, HTE, SNRE	EX	00-2120-99-154	24V DC Coil (Nema 7)
OOU, BOU, SOU, HOU, SGRU, TOU, BTU, STU, HTU, SNRU	—	02-2110-99-155	110V AC Coil
OOU, BOU, SOU, HOU, SGRU, TOU, BTU, STU, HTU, SNRU	EX	02-2110-99-156	110V AC Coil (Nema 7)

[1]Use the tables above when specifying pump model and electrical requirements.
[2]If a suffix is not present at the end of the model number, the pump will be equipped with a NEMA 4 valve body.
Example: M2/TOI/TF/TF/AT
If there is an "EX" suffix at the end of the model number, the pump will be equipped with a NEMA 7 valve body.
Example: M2/TOI/TF/TF/AT/EX

M2R

CHAMP® (PLASTIC) AIR-OPERATED

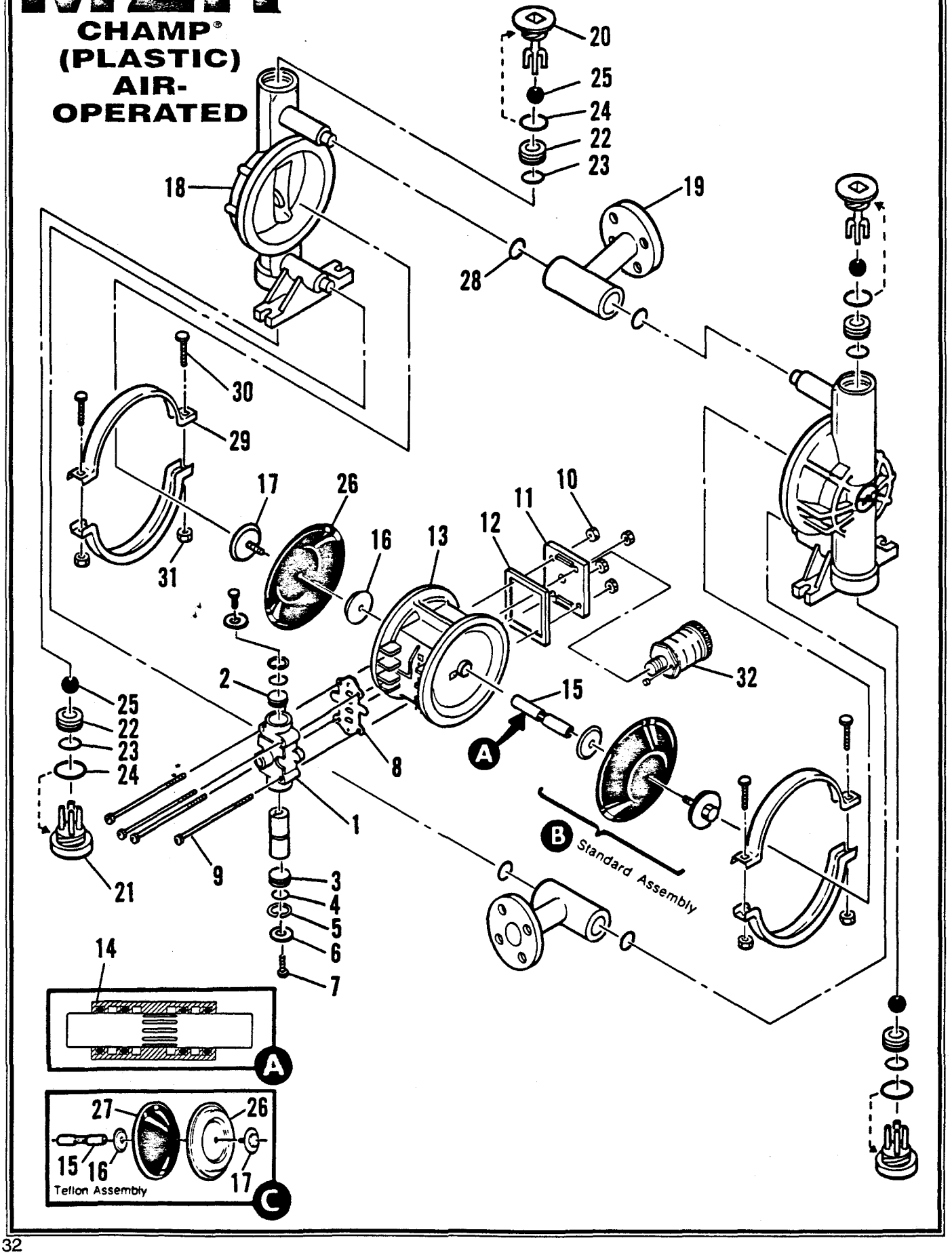

WILDEN MODEL M2R CHAMP — AIR-OPERATED

Item No.	Part Description	Qty. Per Pump	M2R/PO P/N	M2R/PT P/N	M2R/PC P/N	M2R/PP P/N	M2R/KO P/N	M2R/KT P/N	M2R/KC P/N	M2R/KK P/N
1	Air Valve Assembly*	1	02-2000-07	02-2000-07	02-2000-05	02-2000-05	02-2000-07	02-2000-07	02-2000-05	02-2000-05
2	End Cap w/Guide	1	02-2340-23	02-2340-23	02-2340-23	02-2340-23	02-2340-23	02-2340-23	02-2340-23	02-2340-23
3	End Cap w/o Guide	1	02-2350-23	02-2350-23	02-2350-23	02-2350-23	02-2350-23	02-2350-23	02-2350-23	02-2350-23
4	End Cap O-Ring	2	2D	2D	2D	2D	2D	2D	2D	2D
5	Snap Ring	2	S80T	S80T	S80T	S80T	S80T	S80T	S80T	S80T
6	End Cap Cover	2	N/R	N/R	02-2420-55	02-2420-55	N/R	N/R	02-2420-55	02-2420-55
7	End Cap Bolt	2	N/R	N/R	02-2450-22	02-2450-22	N/R	N/R	02-2450-22	02-2450-22
8	Air Valve Gasket — Buna	1	02-2600-52	02-2600-52	02-2600-52	02-2600-52	02-2600-52	02-2600-52	02-2600-52	02-2600-52
9	Air Valve Bolt	4	S80AS	S80AS	PCS80AS	PCS80AS	S80AS	S80AS	PCS80AS	PCS80AS
10	Air Valve Nut	4	S62C	S62C	PCS62C	PCS62C	S62C	S62C	PCS62C	PCS62C
11	Muffler Plate	1	02-3180-20	02-3180-20	02-3180-20	02-3180-20	02-3180-20	02-3180-20	02-3180-20	02-3180-20
12	Muffler Plate Gasket — Buna	1	02-3500-52	02-3500-52	02-3500-52	02-3500-52	02-3500-52	02-3500-52	02-3500-52	02-3500-52
13	Center Section[1]	1	02-3151-20	02-3151-20	02-3151-20	02-3151-20	02-3151-20	02-3151-20	02-3151-20	02-3151-20
14	Center Section O-Ring	4	02-3200-52	02-3200-52	02-3200-52	02-3200-52	02-3200-52	02-3200-52	02-3200-52	02-3200-52
15	Shaft[1]	1	02-4000-09[1]	02-4050-09[1]	02-4000-09[1]	02-4050-09[1]	02-4000-09[1]	02-4050-09[1]	02-4000-09[1]	02-4050-09[1]
16	Inner Piston	2	81C	T81C	81C	T81C	81C	T81C	81C	T81C
17	Outer Piston	2	P81B	PT81B	P81B	PT81B	K81B	KT81B	K81B	KT81B
18	Liquid Chamber	2	02-6000-20	02-6000-20	02-6000-20	02-6000-20	02-6000-21	02-6000-21	02-6000-21	02-6000-21
19	Manifold Tee Section[2]	2	02-6190-20	02-6190-20	02-6190-20	02-6190-20	02-6190-21	02-6190-21	02-6190-21	02-6190-21
20	Top Retainer	2	02-6410-20	02-6410-20	02-6410-20	02-6410-20	02-6410-21	02-6410-21	02-6410-21	02-6410-21
21	Bottom Retainer	2	02-6420-20	02-6420-20	02-6420-20	02-6420-20	02-6420-21	02-6420-21	02-6420-21	02-6420-21
22	Valve Seat	4	02-1120-20	02-1120-20	02-1120-20	02-1120-20	02-1120-21	02-1120-21	02-1120-21	02-1120-21
23	Valve Seat O-Ring**	4	—	—	—	—	—	—	—	—
24	Retainer O-Ring**	4	—	—	—	—	—	—	—	—
25	Valve Ball**	4	—	—	—	—	—	—	—	—
26	Diaphragm**	2	—	TF83	—	TF83	—	TF83	—	TF83
27	Back-up Diaphragm	2	N/R	02-1060-56	N/R	02-1060-56	N/R	02-1060-56	N/R	02-1060-56
28	Tee Section O-Ring**	4	—	—	—	—	—	—	—	—
29	Clamp Band Assembly	2	02-7030-03	02-7030-03	02-7030-05	02-7030-05	02-7030-03	02-7030-03	02-7030-05	02-7030-05
30	Clamp Band Bolt	4	S32B	S32B	PCS32B	PCS32B	S32B	S32B	PCS32B	PCS32B
31	Clamp Band Nut	4	S39C	S39C	PCS39C	PCS39C	S39C	S39C	PCS39C	PCS39C
32	Muffler	1	70C	70C	70C	70C	70C	70C	70C	70C
33	Expanded Teflon® Gasket Kit (Not Shown)	1	N/R	TF2GK	N/R	TF2GK	N/R	TF2GK	N/R	TF2GK

[1]Refer to page #26 prior to ordering these parts.
[2]DIN Flange: Polypropylene = 02-6200-20, PVDF = 02-6200-21
*Air valve assembly includes items 1–7.
**Refer to corresponding elastomer chart on page 36 for correct part number.

M2R

CHAMP® (PLASTIC) SOLENOID-OPERATED

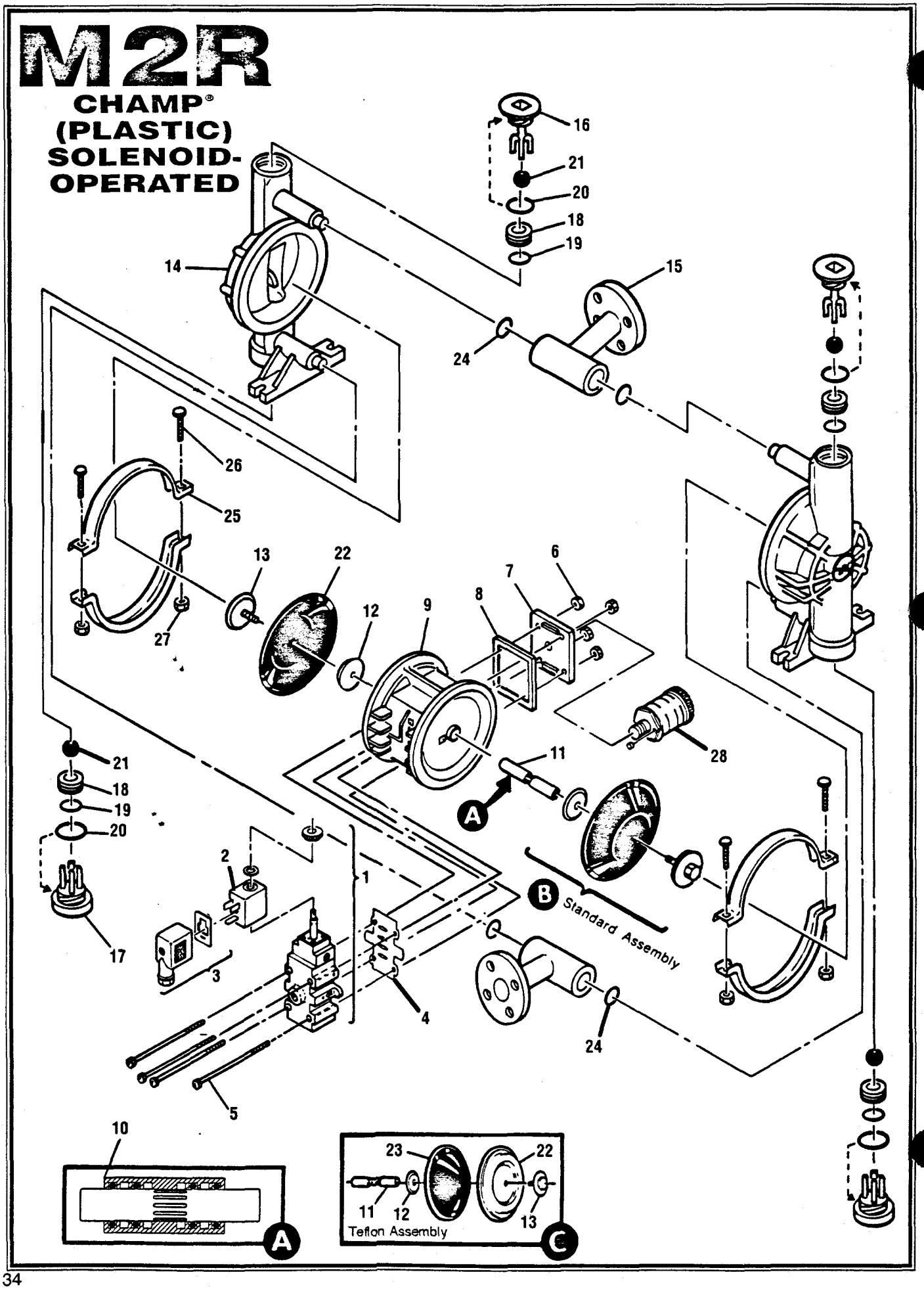

WILDEN MODEL M2R CHAMP — SOLENOID-OPERATED

Item No.	Part Description	Qty. Per Pump	M2R/PO__[1] P/N	M2R/PT__[1] P/N	M2R/KO__[1] P/N	M2R/KT__[1] P/N
	Solenoid Valve Assembly	1	See table below			
1	Main Valve Body	1	See table below			
2	Coil	1	See table below			
3	Terminal Connector	1	00-2130-99	00-2130-99	00-2130-99	00-2130-99
4	Air Valve Gasket — Buna	1	02-2600-52	02-2600-52	02-2600-52	02-2600-52
5	Air Valve Bolt	4	S80AS	S80AS	S80AS	S80AS
6	Air Valve Nut	4	S62C	S62C	S62C	S62C
7	Muffler Plate	1	02-3180-20	02-3180-20	02-3180-20	02-3180-20
8	Muffler Plate Gasket — Buna	1	02-3500-52	02-3500-52	02-3500-52	02-3500-52
9	Center Section	1	02-3151-20	02-3151-20	02-3151-20	02-3151-20
10	Center Section O-Ring	4	02-3200-52	02-3200-52	02-3200-52	02-3200-52
11	Shaft	1	02-4000-09	02-4050-09	02-4000-09	02-4050-09
12	Inner Piston	2	02-3710-01-100	02-3710-01-100	02-3710-01-100	02-3710-01-100
13	Outer Piston	2	P81B	PT81B	K81B	KT81B
14	Liquid Chamber	2	02-6000-20	02-6000-20	02-6000-21	02-6000-21
15	Manifold Tee Section	2	02-6190-20	02-6190-20	02-6190-21	02-6190-21
16	Top Retainer	2	02-6410-20	02-6410-20	02-6410-21	02-6410-21
17	Bottom Retainer	2	02-6420-20	02-6420-20	02-6420-21	02-6420-21
18	Valve Seat	4	02-1120-20	02-1120-20	02-1120-21	02-1120-21
19	Valve Seat O-Ring*	4	—	—	—	—
20	Retainer O-Ring*	4	—	—	—	—
21	Valve Ball**	4	—	—	—	—
22	Diaphragm*	2	—	TF83	—	TF83
23	Back-up Diaphragm	2	N/R	02-1060-56	N/R	02-1060-56
24	Tee Section O-Ring*	4	—	—	—	—
25	Clamp Band Assembly	2	02-7030-03	02-7030-03	02-7030-03	02-7030-03
26	Clamp Band Bolt	4	S32B	S32B	S32B	S32B
27	Clamp Band Nut	4	S39C	S39C	S39C	S39C
28	Muffler	1	70C	70C	70C	70C
29	Expanded Teflon® Gasket Kit (Not Shown)	1	N/R	TF2GK	N/R	TF2GK

[1]**DIN Flange: Polypropylene = 02-6200-20, PVDF = 02-6200-21**

*Refer to corresponding elastomer chart on page 36 for correct part number.

SOLENOID-OPERATED VALVE ASSEMBLY OPTIONS (CONSISTS OF VALVE BODY,COIL AND CONNECTOR)

Pump Models	Suffix[2]	Part Number	Description
POI. KOI. PTI. KTI	—	02-2060-99	24V AC / 12V DC Valve Assembly
POI. KOI. PTI. KTI	EX	02-2060-99-153	24V AC / 12V DC Valve Assembly (Nema 7)
POE. KOE. PTE. KTE	—	02-2040-99	24V DC Valve Assembly
POE. KOE. PTE. KTE	EX	02-2040-99-154	24V DC Valve Assembly (Nema 7)
POU. KOU. PTU. KTU	—	02-2060-99-155	110V AC Valve Assembly
POU. KOU. PTU. KTU	EX	02-2060-99-156	110V AC Valve Assembly (Nema 7)

ITEM 1 MAIN VALVE BODY OPTIONS

Pump Model Suffix[2]	Part Number	Description
—	02-2040-01	Main Valve Body
EX	02-2040-01-154	Main Valve Body (Nema 7)

ITEM 2 COIL OPTIONS

Pump Models	Suffix[2]	Part Number	Description
POI. KOI. PTI. KTI	—	02-2110-99	24V AC / 12V DC Coil
POI. KOI. PTI. KTI	EX	02-2110-99-153	24V AC / 12V DC Coil (Nema 7)
POE. KOE. PTE. KTE	—	02-2120-99	24V DC Coil
POE. KOE. PTE. KTE	EX	00-2120-99-154	24V DC Coil (Nema 7)
POU. KOU. PTU. KTU	—	02-2110-99-155	110V AC Coil
POU. KOU. PTU. KTU	EX	02-2110-99-156	110V AC Coil (Nema 7)

[1]Use the tables above when specifying pump model and electrical requirements.

[2]If a suffix is not present at the end of the model number, the pump will be equipped with a NEMA 4 valve body.
Example: M2/PTI/TF/TF/PT

If there is a "EX" suffix at the end of the model number, the pump will be equipped with a NEMA 7 valve body.
Example: M2/PTI/TF/TF/PT/EX

SECTION 8
ELASTOMER OPTIONS / TORQUE SPECIFICATIONS

ELASTOMER OPTIONS FOR MODEL M2R CHAMP

MATERIAL	VALVE SEAT O-RING (4) (Item #23)	RETAINER O-RING (4) (Item #24)	VALVE BALL (4) (Item #25)	DIAPHRAGM (2) (Item #26)	TEE SECTION O-RING (4) (Item #28)
Polyurethane	02-1210-50	02-1260-50	02-1080-50	PU83	02-6320-50
Buna	02-1210-52	02-1260-52	BN91	BN83	02-6320-52
Teflon® Encapsulated Silicone	02-1210-59	02-1260-59	NA	NA	02-6320-59
Teflon® Encapsulated Viton	02-1210-60	02-1260-60	NA	NA	02-6320-60
Neoprene	NA	NA	91	83	NA
Viton	NA	NA	VT91	VT83	NA
Nordel	NA	NA	ND91	ND83	NA
Teflon®	NA	NA	TF91	TF83	NA
Saniflex™	NA	NA	FG91	FG83	NA
Wil-Flex™	02-1211-58	02-1260-58	02-1080-58	02-1010-58	02-6320-58
Saniflex™ Backup	NA	NA	NA	02-1060-56[1]	NA

1. Neoprene back-up diaphragms, P/N TF83B, are available upon request. Please consult your local distributor.

ELASTOMER OPTIONS FOR MODEL M2 METAL PUMPS

MATERIAL	DIAPHRAGM (2) (ITEM #22)	VALVE BALLS (4) (ITEM #23)	VALVE SEAT O-RINGS (4) (ITEM #25)
Neoprene	83	91	N/A
Buna-N	BN83	BN91	90B
Saniflex™	FG83	FG91	FG90B
Wil-Flex™	02-1010-58	02-1080-58	02-1200-58
Nordel (EPDM)	ND83	ND91	ND90B
Polyurethane	PU83	02-1080-50	02-1200-50
Teflon® PTFE	TF83	TF91	90T
Viton	VT83	VT91	N/A
Saniflex™ Back-up[2]	02-1060-56[1]	N/A	N/A

NOTE: This elastomer chart is in reference to M2 Metal Pumps, page 13.

[1] Use Saniflex™ back-up diaphragms with Teflon® PTFE, P/N TF83, diaphragms only.

[2] Neoprene back-up diaphragms, P/N TF83B, are available upon request. Please consult your local distributor.

TORQUE SPECIFICATIONS FOR MODEL M2 METAL & M2R PLASTIC

ITEM #	DESCRIPTION OF PART	MAXIMUM TORQUE	
		METAL	PLASTIC
1	Air Valve — Lubed	30 in.-lbs. [3.4 m-N]	35 in.-lbs. [3.9 m-N]
2	Outer Piston — Rubber and Teflon	28 ft.-lbs. [38 m-N]	25 ft.-lbs. [33.9 m-N]
3	Top and Bottom Retainers	—	125 in.-lbs. [14.1 m-N]
4	Large Clamp Band — Rubber	—	95 in.-lbs. [10.7 m-N]
5	Large Clamp Band — Teflon	—	125 in.-lbs. [14.1 m-N]
6	Vertical Bolts	115 in.-lbs. [13.0 m-N]	—

WILDEN'S SPECIALTY PUMPS

M8 STALLION

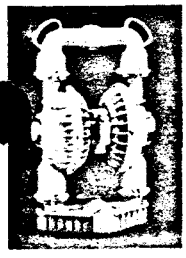

2" inlet. Solids clearance up to ¾". Built to handle rough treatment: cast-in handles for easy portability, reinforced shaft and high impact polyurethane base.

SOLENOID-OPERATED

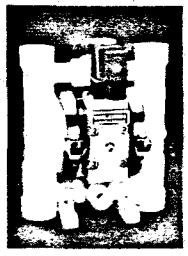

Each stroke of this pump is controlled by electrical impulses making it ideal for batching, metering, and other electrically controlled dispensing applications.

M1 ULTRAPURE III

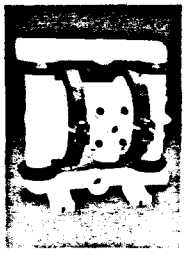

½" inlet. Teflon® PFA construction, temperatures to 300°F. Up to 14 GPM. Materials of construction have been selected to reduce contamination while providing a safer work environment.

FOOD PROCESSING

Constructed with FDA approved materials: bead blasted 316 Stainless Steel construction with tri-clamp porting and wing-nut fasteners. Foodmaster™ (pictured) is USDA accepted.

THE WILDEN PUMP LINE

M.025 (CHAMP SERIES)

MODEL M.025

- ¼" Inlet
- Up To 4.5 GPM
- 125 Max. PSIG
- Max. Particle Size: ¼"

Materials of Construction:
PVDF, Acetal, Polypropylene, Carbon-filled Acetal

Suction Lift:		
(Rubber)	Dry:	4.5'
	Wet:	25'
(Teflon®)	Dry:	4.5'
	Wet:	25'

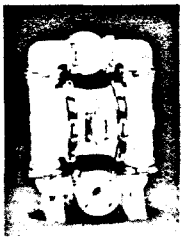

M4 PLASTIC (CHAMP SERIES)

MODEL M4

- 1½" Inlet
- Up To 73 GPM
- 125 Max. PSIG
- Max. Particle Size: ⅜"

Materials of Construction:
Aluminum, Cast Iron, Stainless Steel, Hastelloy, Polypropylene, PVDF, Teflon® PFA

Suction Lift:	Plastic	Metal
(Rubber)	Dry: 17'	21'
	Wet: 25'	25'
(Teflon®)	Dry: 7'	7'
	Wet: 25'	25'

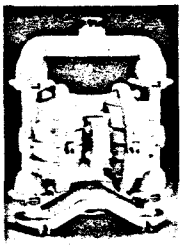

M4 METAL

LUBE-FREE AVAILABLE

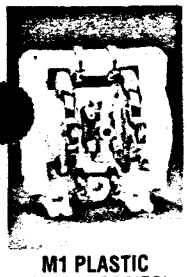

M1 PLASTIC (CHAMP SERIES)

MODEL M1

- ½" Inlet
- Up To 14 GPM
- 110 Max. PSIG
- Max. Particle Size: 1/16"

Materials of Construction:
Polypropylene, PVDF, Teflon®, Graphite-filled Polypropylene, Aluminum, Stainless Steel

Suction Lift:	Plastic	Metal
(Rubber)	Dry: 10'	10'
	Wet: 25'	25'
(Teflon®)	Dry: 7'	8'
	Wet: 25'	25'

M1 METAL

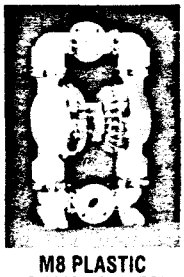

M8 PLASTIC (CHAMP SERIES)

MODEL M8

- 2" Inlet
- Up To 155 GPM
- 125 Max. PSIG
- Max. Particle Size: ½"

Materials of Construction:
Aluminum, Cast Iron, Stainless Steel, Hastelloy, PVDF, Polypropylene

Suction Lift:	Plastic	Metal
(Rubber)	Dry: 17'	20'
	Wet: 25'	25'
(Teflon®)	Dry: 8'	8'
	Wet: 25'	25'

M8 METAL

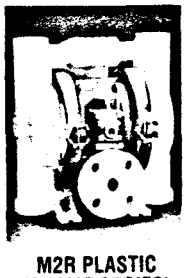

M2R PLASTIC (CHAMP SERIES)

MODEL M2

- 1" Inlet
- Up To 37 GPM
- 125 Max. PSIG
- Max. Particle Size: ¼"

Materials of Construction:
Aluminum, Stainless Steel, Hastelloy, Polypropylene, PVDF

Suction Lift:	Plastic	Metal
(Rubber)	Dry: 17'	19'
	Wet: 25'	25'
(Teflon®)	Dry: 7'	8'
	Wet: 25'	25'

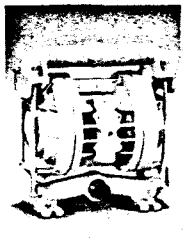

M2 METAL

M15

MODEL M15

- 3" Inlet
- Up To 230 GPM
- 125 Max. PSIG
- Max. Particle Size: ⅜"

Materials of Construction:
Aluminum, Cast Iron, Stainless Steel, Hastelloy

Suction Lift:	
(Rubber)	Dry: 17'
	Wet: 25'
(Teflon®)	Dry: 14'
	Wet: 25'

For further information contact your local Wilden distributor:

M20

MODEL M20

- 4" Inlet
- Up To 304 GPM
- 125 Max. PSIG
- Max. Particle Size: 1⅜"

Materials of Construction:
Cast Iron

Suction Lift:
Dry: 13'
Wet: 25'

WILDEN PUMP & ENGINEERING COMPANY
22069 Van Buren St., Grand Terrace, CA 92313-5651
(909) 422-1730 • FAX (909) 783-3440

Installation & Maintenance Instructions

ASCO Red-Hat II™

OPEN–FRAME, GENERAL PURPOSE, WATERTIGHT/EXPLOSIONPROOF SOLENOIDS

SERIES
8003G
8202G

Form No.V6584R4

—SERVICE NOTICE—

ASCO® solenoid valves with design change letter "G" in the catalog number (example: 8210G 1) have an epoxy encapsulated ASCO® Red Hat II® solenoid. This solenoid replaces some of the solenoids with metal enclosures and open–frame constructions. Follow these installation and maintenance instructions if your valve or operator uses this solenoid.

DESCRIPTION

Catalog numbers 8003G and 8202G are epoxy encapsulated pull–type solenoids. The green solenoid with lead wires and 1/2" conduit connection is designed to meet Enclosure Type 1–General Purpose, Type 2–Dripproof, Types 3 and 3S–Raintight, and Types 4 and 4X–Watertight. The black solenoid on catalog numbers prefixed "EF" is designed to meet Enclosure Types 3 and 3S–Raintight, Types 4 and 4X–Watertight, Types 6 and 6P–Submersible, Type 7 (A, B, C, & D) Explosionproof Class I, Division 1 Groups A, B, C, & D and Type 9 (E, F, & G)–Dust–Ignitionproof Class II, Division 1 Groups E, F, & G. The Class II, Groups F & G Dust Locations designation is not applicable for solenoids or solenoid valves used for steam service or when a class "H" solenoid is used. See *Temperature Limitations* section for solenoid identification and nameplate/retainer for service. When installed just as a solenoid and not attached to an ASCO valve, the core has a 0.250–28 UNF–2B tapped hole, 0.38 or 0.63 minimum full thread.

Catalog numbers 8202G1, 8202G3, 8202G5 and 8202G7 are epoxy encapsulated push–type, reverse–acting solenoids having the same enclosure types as previously stated for Catalog numbers 8003G1 and 8003G2

Series 8003G and 8202G solenoids are available in:

- **Open–Frame Construction:** The green solenoid may be supplied with 1/4" spade, screw, or DIN terminals. (Refer to Figure 4)
- **Panel Mounted Construction:** These solenoids are specifically designed to be panel mounted by the customer through a panel having a .062 to .093 maximum wall thickness. Refer to Figure 1 and section on *Installation of Panel Mounted Solenoid.*

Optional Features For Type 1 – General Purpose Construction Only

- **Junction Box:** This junction box construction meets Enclosure Types 2,3,3S,4, and 4X. Only solenoids with 1/4" spade or screw terminals may have a junction box. The junction box provides a 1/2" conduit connection, grounding and spade or screw terminal connections within the junction box (See Figure 5).
- **DIN Plug Connector Kit No.K236–034:** Use this kit only for solenoids with DIN terminals. The DIN plug connector kit provides a two pole with grounding contact DIN Type 43650 construction (See Figure 6).

OPERATION

Series 8003G – When the solenoid is energized, the core is drawn into the solenoid base sub–assembly. IMPORTANT: **When the solenoid is de–energized, the initial return force for the core, whether developed by spring, pressure, or weight, must exert a minimum force to overcome residual magnetism created by the solenoid. Minimum return force for AC Construction is 11 ounces, and 5 ounces for DC construction.**

Series 8202G – When the solenoid is energized, the disc holder assembly seats against the orifice. When the solenoid is de–energized, the disc holder assembly returns. IMPORTANT: **Initial return force for the disc or disc holder assembly, whether developed by spring, pressure, or weight, must exert a minimum force to overcome residual magnetism created by the solenoid. Minimum return force is 1 pound, 5 ounces.**

INSTALLATION

Check nameplate for correct catalog number, service, and wattage. Check front of solenoid for voltage and frequency.

⚠ WARNING: To prevent the possibility of electrical shock from the accessibility of live parts, install the open–frame solenoid in an enclosure.

For Black Enclosure Types 7 and 9 Only

⚠ CAUTION: To prevent fire or explosion, do not install solenoid and/or valve where ignition temperature of hazardous atmosphere is less than 165° C. On valves used for steam service or when a class "H" solenoid is used, do not install in hazardous atmosphere where ignition temperature is less than 180°C. See nameplate/retainer for service.

NOTE: These solenoids have an internal non–resetable thermal fuse to limit solenoid temperature in the event that extraordinary conditions occur which could cause excessive temperatures. These conditions include high input voltage, a jammed core, excessive ambient temperature or a shorted solenoid, etc. This unique feature is a standard feature only in solenoids with black explosionproof/dust–ignitionproof enclosures (Types 7 & 9).

IMPORTANT: To protect the solenoid valve or operator, install a strainer or filter, suitable for the service involved in the inlet side as close to the valve or operator as possible. Clean periodically depending on service conditions. See ASCO Series 8600, 8601, and 8602 for strainers.

Temperature Limitations

For maximum valve ambient temperatures, refer to chart. The temperature limitations listed, only indicate maximum application temperatures for field wiring rated at 90°C. Check catalog number prefix and watt rating on nameplate to determine maximum ambient temperature. See valve installation and maintenance instructions for maximum fluid temperature. NOTE: For steam service, refer to *Wiring* section, *Junction Box* for temperature rating of supply wires.

Temperature Limitations For Series 8003G or 8202G Solenoids for use on Valves Rated at 10.1, 11.6, 17.1, or 22.6 Watts

Watt Rating	Catalog Number Coil Prefix	Class of Insulation	Maximum † Ambient Temp. °F
10.1 & 17.1	None, FB, KF, KP SC, SD, SF, & SP,	F	125
10.1 & 17.1	HB, HT, KB, KH, SS, ST, SU,	H	140
11.6 & 22.6	None, FB,KF, KP, SC, SD, SF, & SP.	F	104
11.6 & 22.6	HP, HT, KB, KH, SS, ST, SU, & SV	H	104

† Minimum ambient temperature −40° F (−40° C).

Positioning

This solenoid is designed to perform properly when mounted in any position. However, for optimum life and performance, the solenoid should be mounted vertically and upright to reduce the possibility of foreign matter accumulating in the solenoid base sub–assembly area.

Wiring

Wiring must comply with local codes and the National Electrical Code. All solenoids supplied with lead wires are provided with a grounding wire which is green or green with yellow stripes and a 1/2" conduit connection. To facilitate wiring, the solenoid may be rotated 360°. For the watertight and

© Automatic Switch Co. MCMXCIV All Rights Reserved

Printed in U.S.A.

explosionproof solenoid, electrical fittings must be approved for use in the approved hazardous locations.

Additional Wiring Instructions For Optional Features:

- **Open–Frame solenoid with 1/4″ spade terminals.**

For solenoids supplied with screw terminal connections use #12–18 AWG stranded copper wire rated at 90°C or greater. Torque terminal block screws 10 ± 2 in–lbs [1,0 ± 1,2 Nm]. A tapped hole is provided in the solenoid for grounding, use a #10–32 machine screw. Torque grounding screw to 15 – 20 in–lbs [1,7 – 2,3 Nm]. On solenoids with screw terminals, the socket head screw holding the terminal block to the solenoid is the grounding screw. Torque the screw to 15 – 20 in–lbs [1,7 – 2,3 Nm] with a 5/32″ hex key wrench.

- **Junction Box**

The junction box is used with spade or screw terminal solenoids only and is provided with a grounding screw and a 1/2″ conduit connection. Connect #12–18 AWG standard copper wire only to the screw terminals. Within the junction box use field wire that is rated 90°C or greater for connections. For steam service use 105°C rated wire up to 50 psi or use 125°C rated wire above 50 psi. After electrical hookup, replace cover gasket, cover, and screws. Tighten screws evenly in a crisscross manner.

- **DIN Plug Connector Kit No.K236–034**

1. The open–frame solenoid is provided with DIN terminals to accommodate the plug connector kit.
2. Remove center screw from plug connector. Using a small screwdriver, pry terminal block from connector cover.
3. Use #12–18 AWG stranded copper wire rated at 90°C or greater for connections. Strip wire leads back approximately 1/4″ for installation in socket terminals. The use of wire–end sleeves is also recommended for these socket terminals. Maximum length of wire–end sleeves to be approximately 1/4″. Tinning of the ends of the lead wires is not recommended.
4. Thread wire through gland nut, gland gasket, washer, and connector cover.

NOTE: Connector housing may be rotated in 90° increments from position shown for alternate positioning of cable entry.

5. Check DIN connector terminal block for electrical markings. Then make electrical hookup to terminal block according to markings on it. Snap terminal block into connector cover and install center screw.
6. Position connector gasket on solenoid and install plug connector. Torque center screw to 5 ± 1 in–lbs [0,6 ± 1,1 Nm].

NOTE: Alternating current (AC) and direct current (DC) solenoids are built differently. To convert from one to the other, it may be necessary to change the complete solenoid including the core and solenoid base sub–assembly, not just the solenoid. Consult ASCO.

Installation of Solenoid

Solenoids may be assembled as a complete unit. Tightening is accomplished by means of a hex flange at the base of the solenoid.

Installation of Panel Mounted Solenoid (See Figure 1)

1. Disassemble solenoid following instruction under *Solenoid Replacement* then proceed.
2. Install solenoid base sub–assembly through customer panel.
3. Position spring washer on opposite side of panel over solenoid base sub–assembly.
4. Replace solenoid, nameplate/retainer and red cap.
5. Make electrical hookup, see *Wiring* section.

Solenoid Temperature

Standard solenoids are designed for continuous duty service. When the solenoid is energized for a long period, the solenoid becomes hot and can be touched by hand only for an instant. This is a safe operating temperature.

MAINTENANCE

⚠ WARNING: To prevent the possibility of personal injury or property damage, turn off electrical power, depressurize solenoid operator and/or valve, and vent fluid to a safe area before servicing.

Cleaning

All solenoid operators and valves should be cleaned periodically. The time between cleaning will vary depending on medium and service conditions. In general, if the voltage to the solenoid is correct, sluggish valve operation, excessive noise or leakage will indicate that cleaning is required. Clean strainer or filter when cleaning the valve.

Preventive Maintenance

- Keep the medium flowing through the solenoid operator or valve as free from dirt and foreign material as possible.
- While in service, the solenoid operator or valve should be operated at least once a month to insure proper opening and closing.
- Depending on the medium and service conditions, periodic inspection of internal valve parts for damage or excessive wear is recommended. Thoroughly clean all parts. Replace any worn or damaged parts.

Causes of Improper Operation

- **Faulty Control Circuit:** Check the electrical system by energizing the solenoid. A metallic *click* signifies that the solenoid is operating. Absence of the *click* indicates loss of power supply. Check for loose or blown fuses, open–circuited or grounded solenoid, broken lead wires or splice connections.
- **Burned–Out Solenoid:** Check for open–circuited solenoid. Replace if necessary. Check supply voltage; it must be the same as specified on nameplate/retainer and marked on the solenoid. Check ambient temperature and check that the core is not jammed.
- **Low Voltage:** Check voltage across the solenoid leads. Voltage must be at least 85% of rated voltage.

Solenoid Replacement

1. Disconnect conduit, coil leads, and grounding wire.

NOTE: Any optional parts attached to the old solenoid must be reinstalled on the new solenoid. For 3–way construction, piping or tubing must be removed from pipe adapter.

2. Disassemble solenoids with optional features as follows:

- **Spade or Screw Terminals**
  Remove terminal connections, grounding screw, grounding wire, and terminal block (screw terminal type only).

NOTE: For screw terminals, the socket head screw holding the terminal block serves as a grounding screw.

- **Junction Box**
  Remove conduit and socket head screw (use 5/32″ hex key wrench) from center of junction box. Disconnect junction box from solenoid.
- **DIN Plug Connector**
  Remove center screw from DIN plug connector. Disconnect DIN plug connector from adapter. Remove socket head screw (use 5/32″ hex key wrench), DIN terminal adapter, and gasket from solenoid.

3. Snap off red cap from top of solenoid base sub–assembly. For 3–way construction with pipe adapter (Figure 3), remove pipe adapter, nameplate and solenoid. Omit steps 4 and 5.
4. Push down on solenoid. Then using a suitable screwdriver, insert blade between solenoid and nameplate/retainer. Pry up slightly and push to remove.

NOTE: Series 8202G solenoids have a spacer between the nameplate/retainer and solenoid.

5. Remove solenoid from solenoid base sub–assembly.
6. Reassemble in reverse order of disassembly. Use exploded views for identification and placement of parts.
7. Torque pipe adapter to 90 inch–pounds maximum [10,2 Nm maximum]. Then make up piping or tubing to pipe adapter on solenoid.

Disassembly and Reassembly of Solenoids

1. Remove solenoid, see *Solenoid Replacement*.
2. Remove spring washer form solenoid base sub–assembly. For 3–way construction, remove plugnut gasket.
3. Unscrew solenoid base sub–assembly from valve body.
4. Remove internal solenoid parts for cleaning or replacement. Use exploded views for identification and placement of parts.
5. If the solenoid is part of a valve, refer to basic valve installation and maintenance instructions for further disassembly.
6. Torque solenoid base sub–assembly and adapter to 175±25 in–lbs [19,8±2,8 Nm].

ORDERING INFORMATION FOR ASCO SOLENOIDS

When Ordering Solenoids for ASCO Solenoid Operators or Valves, order the number stamped on the solenoid. Also specify voltage and frequency.

Torque Chart

Part Name	Torque Value in Inch–Pounds	Torque Value in Newton–Meters
solenoid base sub–assembly/adapt-	175 ± 25	19,8 ± 2,8
pipe adapter	90 maximum	10,2 maximum

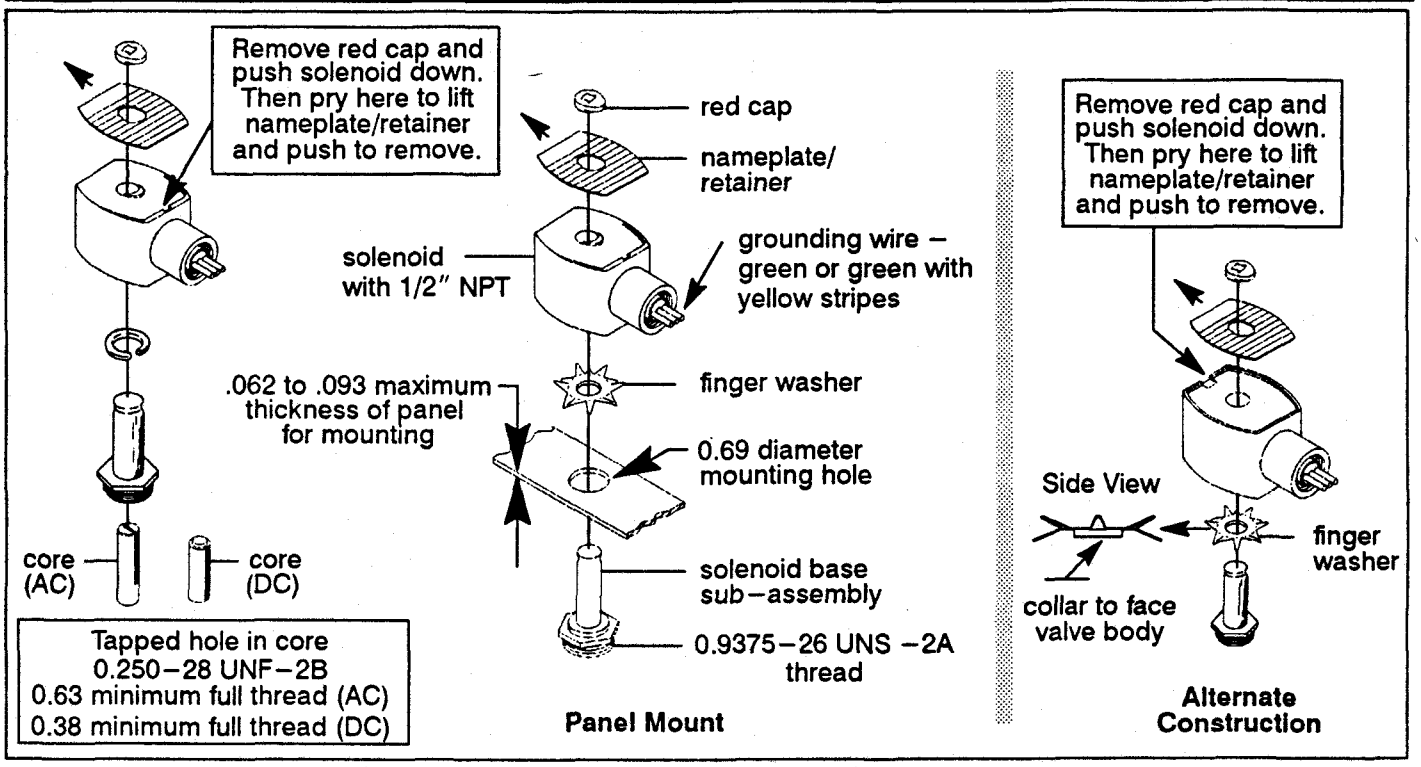

Figure 1. Series 8003G solenoids

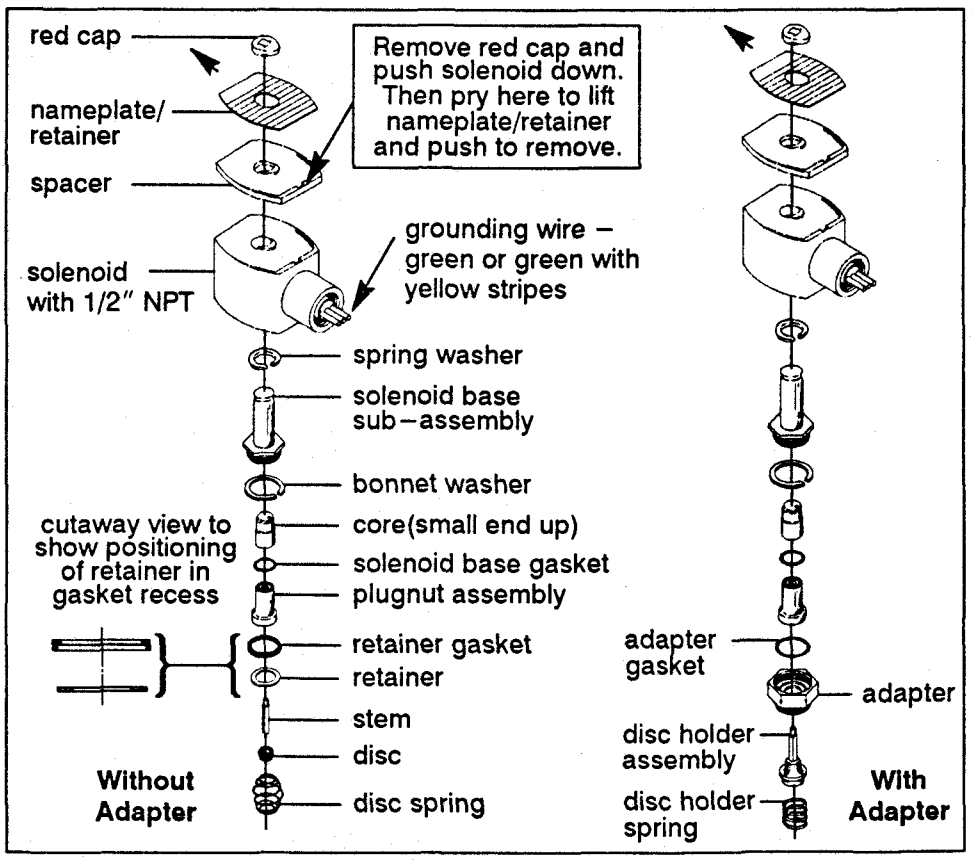

Figure 2. Series 8202G solenoids

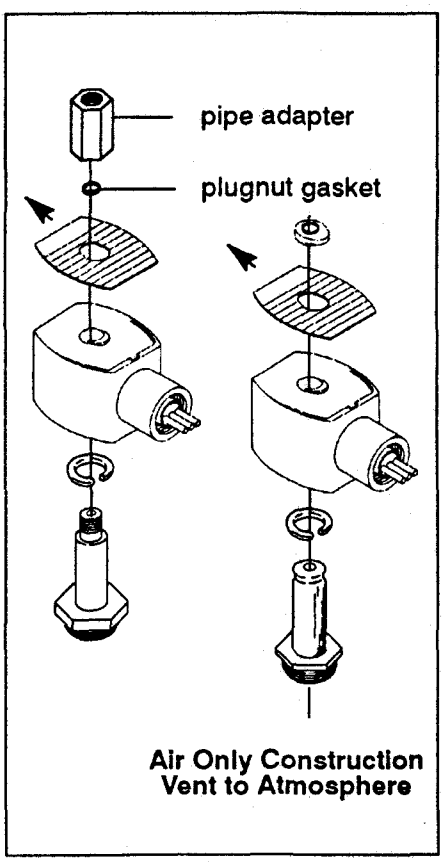

Figure 3. 3–Way Construction

ASCO Valves Automatic Switch Co. 50–60 Hanover Road, Florham Park, New Jersey 07932

Torque Chart

Part Name	Torque Value In Inch–Pounds	Torque Value In Newton–Meters
terminal block screws	10 ± 2	1,1 ± 0,2
socket head screw	15 – 20	1,7 – 2,3
center screw	5 ± 1	0,6 ± 0,1

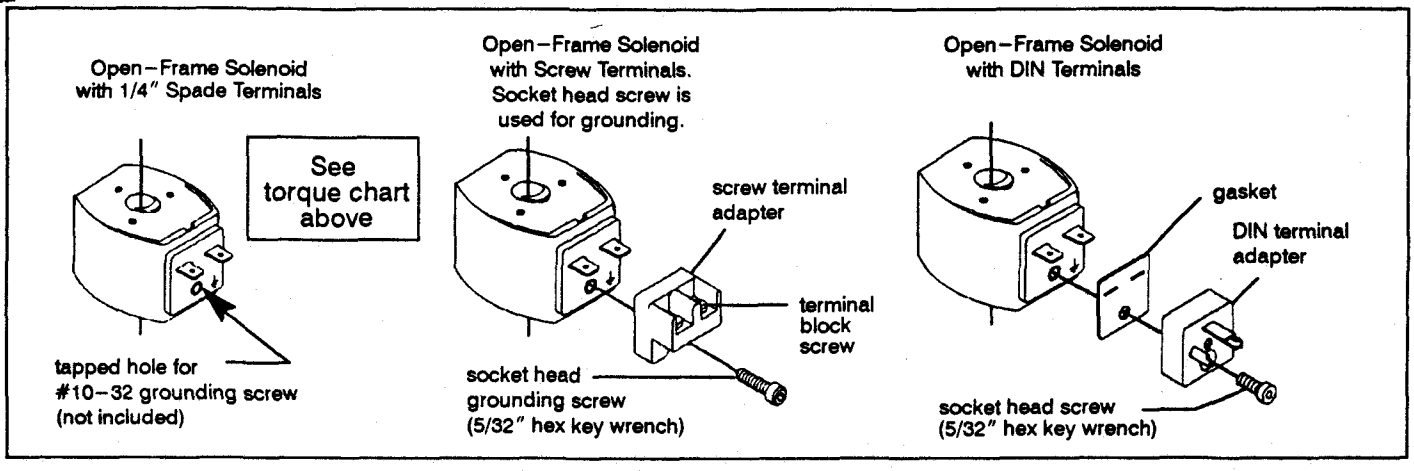

Figure 4. Open–frame solenoids

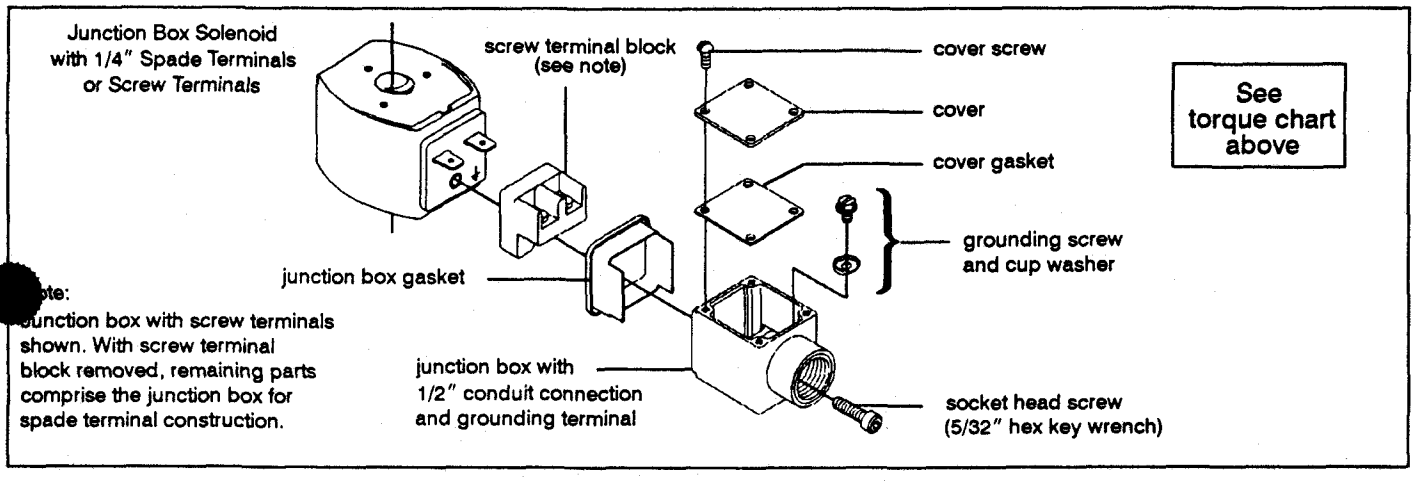

Figure 5. Junction box (optional feature)

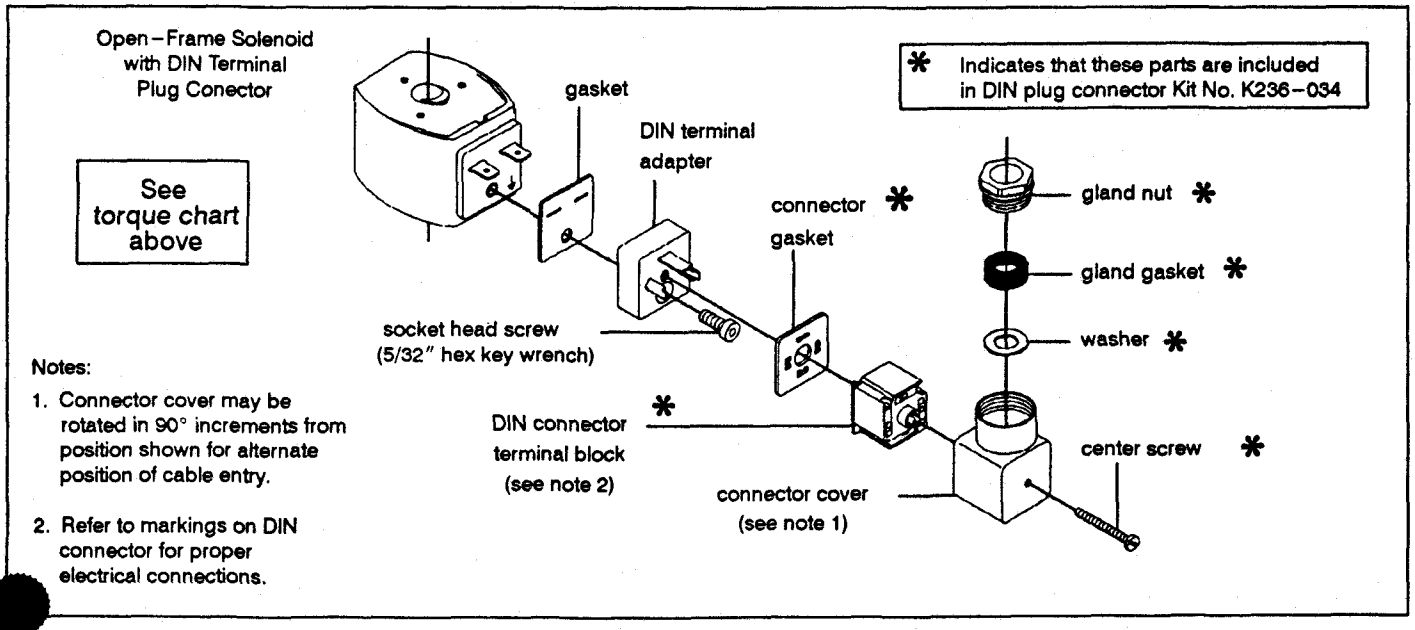

Figure 6. DIN plug connector kit No. K236–034 (optional feature)

ASCO Valves Automatic Switch Co. 50–60 Hanover Road, Florham Park, New Jersey 07932

APPENDIX G
SAND FILTER

Manufacturer/ Supplier:	Envirotrol, Inc. 432 Green Street PO Box 61 Sewickley, PA 15143-0061 (412) 741-2030 Fax: (412) 741-2670 Contact: Tim Sokol
Model:	LP-250P Polyglass Adsorber

OPERATING MANUAL

FOR

MULTI-MEDIA

FILTERS

(MANUAL OPERATION)

Multi-Media Filters

(Manual Operations)

Table of Contents

		Page
1.0	General Description	1
2.0	Installation	2
3.0	Start-Up	3
4.0	Manual Operation	4
5.0	Backwashing	5
6.0	Shutdown	6
7.0	Extended Shutdown	7

1.0 General Description

The filtration system consists of one (1) Multi-Media Filter which is used for removing suspended solids from aqueous waste streams. This media consists of a bottom layer of gravel and an intermediate and top layer of sand, giving in effect a series of filtration steps and allowing retention of substantial amounts of solids before developing an increase in the pressure drop across the filter. The distributor that's located in the bottom layer of gravel inside the filter provides a uniform, efficient collection of water during filter operation. This distributor collects outgoing water during service operation and dispenses incoming water during backwash operation. The collection system features a hub and lateral V-slot screen to minimize plugging V-slot during service.

The filter housing consists of a 250 gallon polyethylene lined, fiberglass wrapped Envirotrol LP-250P vessel.

The filtration media supplied will be 6 $ft.^3$ each of gravel and filter sand.

2.0 Filter/Media Installation

The filter should be placed in a stable location to support the filters approximate operating weight of 4,000-4,500 lbs.

After stabilizing the unit, remove upper 6-inch flange to supply access for media filling. When filling the filter, care must be taken to avoid damaging the bottom water collection system. Media is typically provided in 50-100 lb. sacks. The installer should try to rig a chute or pipe that will direct the base gravel into the sidewall of the vessel to break the fall of the media. The gravel should cover the bottom collector system by a minimum 3-inches to insure that no filter sand will migrate into the water collection system. Always add sufficient gravel, short loading the gravel will result in system failure which will require complete removal of filter media.

Also take care to level gravel as much as possible before adding top layers.

*Add top layers of filtration media as required taking care that media is level.

*See detailed installation instructions for each type of multi-media filters to determine the order that each material is to be installed.

3.0 Start-Up

The following steps should be taken to place the filter in the "Filtration" mode of operation.

1. Initial start-up only (Proceed to backwashing section). This step classifies the media.
2. Check the backwash inlet valve to make sure it's in the closed position.
3. Check the backwash outlet valve to make sure it's in the closed position.
4. Open the vent valve (Top of the Filter) to allow the filter to vent to atmosphere.
5. Make sure the effluent valve is in closed position.
6. Partially open (Less than 50%) the influent valve to initiate filter filling.
7. When the filter is filled,"immediately" close the vent valve to atmosphere. (Water runs out of the drain pipe to drain.)
8. Open the effluent valve.
9. Fully open the influent valve.
10. The filter is in the filtration mode and fully operational.

4.0 Normal Operation

After the filter is in operation for at least 15 minutes, the operator should record the initial pressure drop, across the filter media in a dated log book. This data will be used by the operator to establish a frequency of backwash cycle. Initially this data should be recorded at least every four (4) hours or six (6) times in a twenty-four hour period to establish the frequency cycle. The recording intervals can be reduced after the frequency cycle is established to record the data every twelve (12) hours or twice a day.

5.0 Backwashing

Backwashing is required after a preset time interval elapses. This is determined by operation parameters of a high differential pressure occurring across the filter (5 psi or more from initial clean filter operation).

The filter should be backwashed periodically, to remove suspended solids, by manually removing it from service and manually initializing a backwash cycle. Backwash is accomplished by a high rate of water washing (12-14 gpm/ft^2). The nozzle distribution system assures even backwashing and prevents mud balls and channeling.

The following steps should be take to place the filter in the "Backwash" mode of operation:

1. Slowly close the influent valve.
2. Close the effluent valve.
3. Open backwash outlet valve.
4. Slowly open backwash inlet valve while checking flow meter (supplied by others), to achieve desired flowrate.
5. Backwash for 10-15 minutes (until water is clear).
6. Slowly close the backwash inlet valve.
7. Close backwash outlet valve
8. Open influent valve.
9. Slowly open effluent valve
10. Now the filter is in the "Filtration Mode" and fully operational.

6.0 Shutdown

Should it be necessary to take the Filter from service, it is advisable to first backwash that Filter. If that is not possible, the Filter can be removed from service by simply closing the influent and effluent valves in that order. Thus for normal shutdown of a Filter, the operator should close the influent and effluent valves first, then proceed to backwash. Upon completion of backwash, the Filter will remain full of water but with its influent and effluent valves closed.

For restart, close the influent backwash valve and the effluent backwash valve and open the influent and effluent process valves, thus returning the system to the "Filtration Mode" and making it fully operational.

7.0 Extended Shutdown

For extended shutdowns of one month or more, proceed as described under Section 6.0 except the filter must be backwashed before it is returned to the filtration mode.

ENVIROTROL, INC.
432 Green Street, P.O. Box 61 • Sewickley, Pennsylvania 15143-0061
(412) 741-2030 • FAX 412-741-2670

INSTRUCTIONS FOR INSTALLATION OF POLYGLASS ADSORBERS

LP-61P LP-185P LP-250P LP-340P LP-460P

FRAME OR SKID MOUNTED POLYGLASS ADSORBER

If you received a polyglass adsorber with a support skid then the unit is already filled and ready for placement.

The frame or skid provides a stand alone unit which can be staged on any level surface.

INSTALLATION

1. Locate the adsorption equipment in an area which is level and provides easy access for servicing. Our equipment is self-supporting so no additional structural support is required. All on-site carbon transfers are conducted through upper manways and lids. Therefore, overhead access is required and should be a minimum of five (5) feet. If the units are to be serviced off-site, this access area is not required. However, there must be accessibility for fork trucks, cranes, or boom trucks to remove the equipment.

2. Before piping in the adsorbers, the carbon inside the vessel must be wetted and allowed to degas. This is done by removing the top 6" flange and adding water by hose allowing the gases to vent through the opening.

   Add water until it is seen at a level just above the carbon.

   Allow unit to degas for 1-24 hours depending on your construction schedule.

3. After degassing, seal flange and pipe adsorber into system.

UNSUPPORTED POLYGLASS ADSORBERS

If you have received a polyglass unit with no frame or skid, then the unit has been delivered empty and must have a suitable foundation to stage the vessel.

INSTALLATION

1. Locate the adsorber on a suitable foundation to support the weight of the adsorber while in operation. It is constructed with a tripod base which must be staged on a firm hard foundation such as concrete or blacktop. Gravel or compressed soil is not adequate.

2. After staging the vessel, it should be filled with carbon prior to piping into system. Fresh carbon has been delivered with the vessel and is packaged in 50-55 lb. bags for ease of handling. The top 6" flange is to be removed and carbon dumped into the vessel through the 6" opening. Care must be taken in installing the carbon so that the collection system at the bottom of the tank is not damaged. Pour the first few bags very slowly until the internals are covered or add water to cover the internals and cushion the impact of the carbon.

3. After the appropriate amount of carbon has been added, it should be wetted and allowed to degas for 1-24 hours depending on your construction schedule.

4. After degassing the carbon, replace flange and pipe the vessel into the system.

OPERATION

Our Polyglass Adsorbers are made to be stand-alone and relatively maintenance free. This allows for operation with virtually no attention.

It is recommended that during operation in applications involving solids content in the water, some type of particulate filter be placed upstream of the activated carbon filters. This will help to eliminate plugging problems resulting from solids caking on top of the carbon bed. It will also eliminate any need to backwash and the problems involved in backwashing. If no prefiltration is used, then it is recommended that a pressure gauge be added to monitor back pressures during operation. Maximum operating pressures are listed on the adsorbers for your safety.

BACKWASHING

If backwashing is necessary, the recommended backwash rates are shown in Table 1 for your reference. Please do not backwash at rates higher than those recommended as it may result in damage to the equipment and carbon losses through the inlet line.

TABLE 1. RECOMMENDED BACKWASH RATES

ADSORBER	BACKWASH RATE (gpm)
LP-61P	20-45
LP-185P	30-70
LP-250P	50-100
LP-340P	95-140
LP-460P	100-175

CARBON TRANSFERS/SERVICING

To transfer the carbon out of the vessels, they first must be drained of water. Our standard LP-61P, LP-185P, LP-250P, LP-340P and LP-460P can be drained through the discharge piping. For best results, you may want to direct low air pressure (<5psg) through the inlet to force the water out.

Spent carbon to be sent to Envirotrol for reactivation must contain less than 50% by weight moisture and light volatiles, and no free standing liquids.

FRAME MOUNTED POLYGLASS ADSORBER

If you received a polyglass adsorber with a support frame, the carbon can be changed out either on-site or off-site.

ON-SITE

Spent carbon removal from the polyglass adsorbers is completed through the top 6-inch flange. Remove the bolts and lift the flange and distributor from the adsorber.

Envirotrol offers a complete turnkey vacuum service to changeout the activated carbon. This service includes vacuum removal of the spent carbon, delivery and installation of fresh carbon and return of the spent carbon to our reactivation facilities. Service is typically completed within 2-7 days of the placement of the order.

OFF-SITE

Adsorbers with a support frame can also be sent to our reactivation facilities for service. This can be completed by draining the water, disconnecting the adsorbers and shipping the adsorbers with carbon to Envirotrol.

UNSUPPORTED POLYGLASS ADSORBERS

If you have received a polyglass unit with no support frame, the unit must be serviced on-site.

The spent carbon can be accessed by removing the top 6-inch flange and distributor from the adsorber. The carbon can then be vacuumed out through this 6-inch opening.

Envirotrol offers a complete turnkey vacuum service to changeout the activated carbon. This service includes vacuum removal of the spent carbon, delivery and installation of fresh carbon and return of the spent carbon to our reactivation facilities. Service is typically completed within 2-7 days of the placement of the order.

Please contact your Envirotrol Technical Salesperson to inquire about the logistics and costs associated with this service.

CAUTION: WET ACTIVATED CARBON DEPLETES OXYGEN FROM AIR.

Whenever workers enter a vessel containing carbon, all precautions must be taken since dangerously low levels of oxygen may be encountered. Atmosphere sampling and work procedures for potentially low oxygen areas should be followed.

After a carbon bed has been in service it may contain organic vapors or other gases which may be harmful or fatal to personnel attempting entry into the adsorber. Always test the atmosphere for likely contaminants and follow all applicable OSHA confined space entry procedures.

FOR YOUR SAFETY: The information and recommendation in this publication are, to the best of our knowledge, reliable. Suggestions made concerning uses or applications are only the opinion of Envirotrol, Inc. and users should make their own tests to determine the suitability of these products for their own particular purposes. Envirotrol, Inc. makes no warranty of merchantability or fitness for particular purpose, other than that material conforms to its applicable current standard specifications. The responsibility of Envirotrol, Inc. for claims arising out of breach of warranty, negligence, strict liability, or otherwise is limited to the purchase price of the product.

Polyglass Liquid Phase Adsorbers

SPECIFICATIONS	LP-185P	LP-250P	LP-340P	LP-460P
Dimension A (inches)	30	36	42	48
Dimension B (inches)	94	100	97	102
Dimension C (inches)	70	76	73	78
Carbon Fill (lbs.)	550	750	1100	1400
Flow Rate (GPM, Max.)	25	25	50	50
Temperature (°F, Max.)	150	150	150	150
Pressure (PSIG, Max.)	150	150	150	150
Tare Weight (lbs.)	225	286	370	430

MATERIALS OF CONSTRUCTION:

Tank: Continuous Fiberglass/Resin
Flanges: 356 Aluminum
Piping: Schedule 80 PVC
Stand: Fiberglass Reinforced Plastic
Liner: Polyethylene
(Polypropylene, PVDF, Halar also available)

PRESSURE DROP

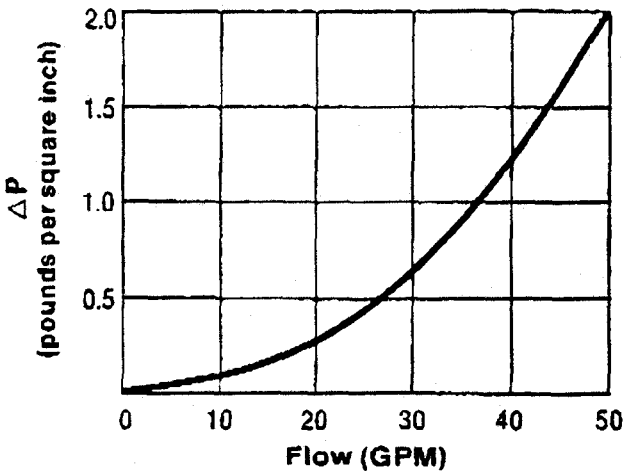

Envirotrol offers a full line of polyglass liquid phase adsorbers for applications requiring high pressure and corrosion resistance. Their lightweight construction makes them very easy to maneuver and install. Envirotrol can also provide custom systems including skid mounted multi-adsorber units with all required instrumentation. Complete on-site and off-site carbon change-out services are also available. Please contact your Envirotrol sales representative concerning any requirements you have.

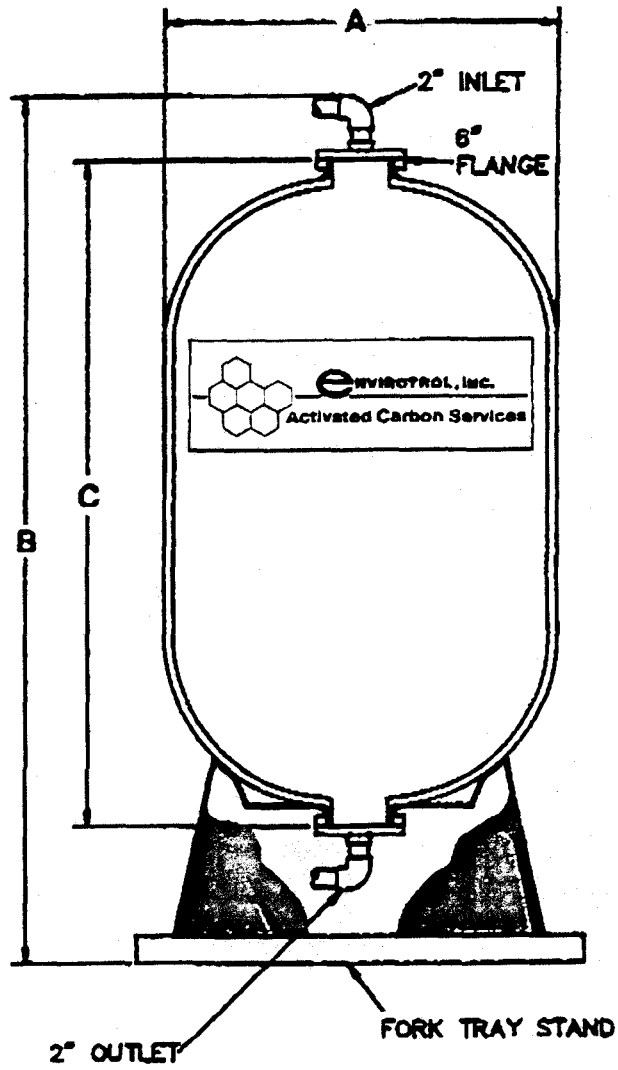

ENVIROTROL, INC.
432 Green Street, P.O. Box 61 • Sewickley, Pennsylvania 15143-0061
(412) 741-2030 • FAX 412-741-2670

FOR YOUR SAFETY: The information and recommendations in this publication are, to the best of our knowledge, reliable. Suggestions made concerning uses or applications are only the opinion of Envirotrol, Inc. and users should make their own tests to determine the suitability of these products for their own particular purposes. Envirotrol, Inc. makes no warranty of merchantability or fitness for particular purpose, other than that material conforms to its applicable current standard specifications. The responsibility of Envirotrol, Inc. for claims arising out of breach of warranty, negligence, strict liability, or otherwise is limited to the purchase price of the product.

ENVIROTROL, INC.
432 Green Street, P.O. Box 61 • Sewickley, Pennsylvania 15143-0061
(412) 741-2030 • FAX 412-741-2670

FAX COVER SHEET

TO: KATHERINE LISTA

FROM: TIM SOKOL

DATE: 10-19-95

RE: MULTI MEDIA FILTER, TRENTON

FAX #: 609-588-6300

Katherine:

Pursuant to your request, I would like to confirm the contents of the multi-media filter that we supplied to the Naval facility in Trenton:

Gravel Support media(1/4 x 1/8):	6 cubic feet
Coarse Filtering Sand(0.8mm to 1.2mm):	6 cubic feet
Filter Sand(0.5mm-0.60mm)	6 cubic feet

The gravel is the bottom layer, the coarse sand next, then finally the filter sand. I hope that this provides you with the information you were looking for, if not, please call.

Thank you.

APPENDIX H
DUAL BAG FILTERS

Manufacturer/ Supplier:	Progressive Equipment Corp. 413 East 9th Street Erie, PA 16503 (814) 452-4363 Fax: (814) 459-3094 Contact: Phil Reitzell
Model:	PF180 (Drawing DFS1891) with Model EA2 Hayward Electric Activator
S/N:	95-2-PF180-265-2SS 95-2-PF180-266-2SS
Equipment Information:	Model PF180-2 Progressive 304 Stainless Steel Bag Filter with 2-inch inlet and outlet piping Model ABP-2 2-inch 3-way actuator bypass package (includes valves, automatic actuator, assembled and mounted on bee section and tested, plus two separate check valves for bypass Dual Filter Sentinel: pressure differential switches with sentinel alarm package

Progressive

Extra-High Capacity

MULTI-BASKET STRAINERS AND MULTI-BAG FILTERS

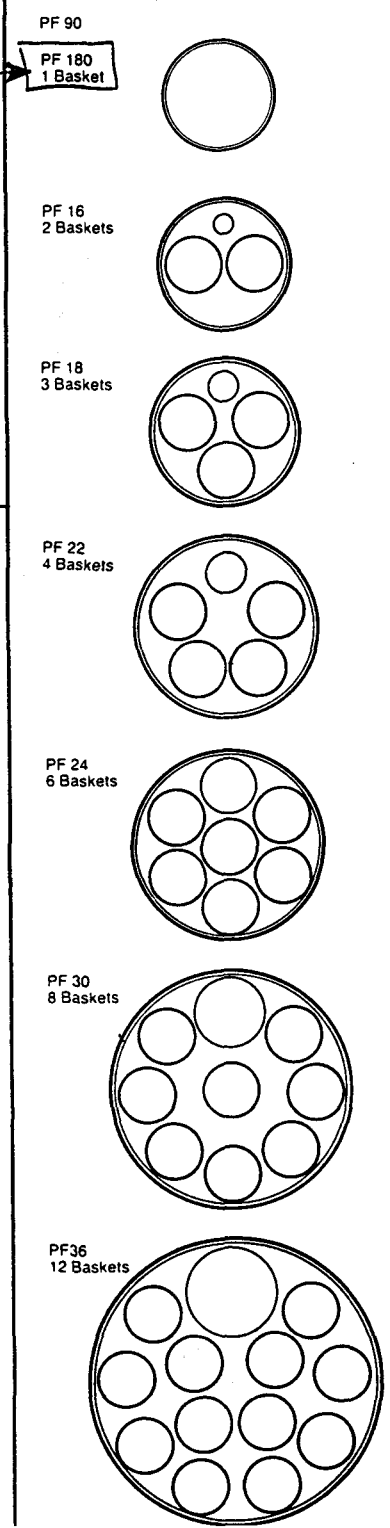

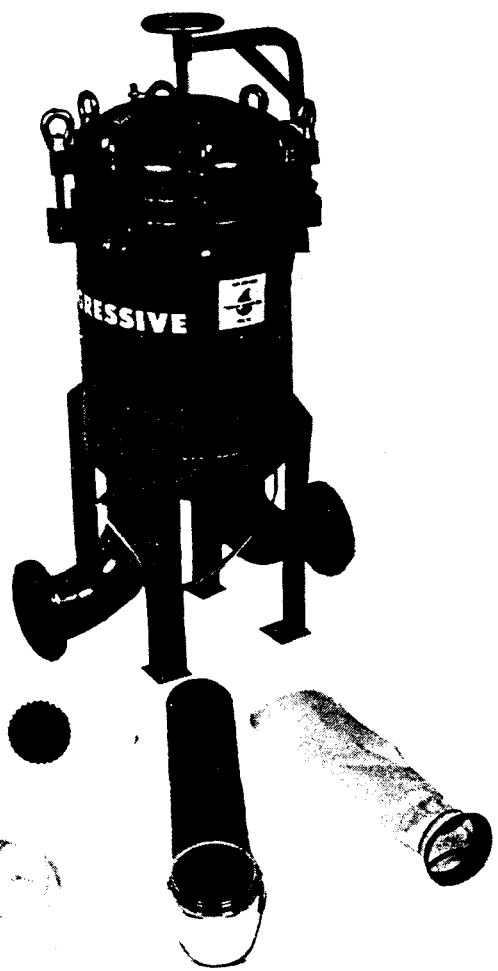

HIGH CAPACITY STRAINERS & BAG FILTERS

STANDARD FEATURES/BENEFITS

- Full flow filtration at a reasonable cost
- Baked epoxy-coated vessel inside and out
- Sentinel Pressure Drop Alert System
- Stainless steel heavy-duty baskets
- Low pressure drop
- Permanently-piped housings are opened without tools and without disturbing the piping
- Machined cover gasket groove provides positive sealing
- Adjustable-height tripod legs
- Easy cleanability
- Conserves water
- Reduces plant down time

OPTIONAL FEATURE: COMPLETE STANDBY FILTRATION SYSTEM WITH AUTOMATIC ACTUATOR CONTROLS.

TWO UNITS IN 1 DUAL PURPOSE UNITS

Any of the Progressive models shown can serve either as a *strainer,* a *bag filter,* or (in models that can be used with the inner basket/inner bag option) as *hybrid combinations* of strainers and filters. The function can be changed at any time, without modification to the housing. Housings are available in epoxy-coated carbon steel, and stainless steel (304 or 316).

Straining

As strainers, the housings are fitted with perforated stainless steel baskets. Perforation size can be from 1/16 to 1/4-inch. When filtering is required, strainer baskets can be ordered with stainless steel wire mesh linings. Mesh sizes offered range from 20 to 200.

Filtering

When the application calls for finer filtration (or when there is reason to use disposable elements) filter bags can be used, supported by stainless steel baskets with 9/64-inch dia. perforations. Bags are made with particle size retention ratings ranging from 800 down to one micron.

Standard bag materials are nylon, polyester, and polypropylene, constructed as felts and monofilament or multifilament meshes. Special purpose felt bags include **high temperature service** (to 500°F) bags of nylon or Teflon, and **Oil-Adsorb** bags made of special felted polypropylene microfibers.

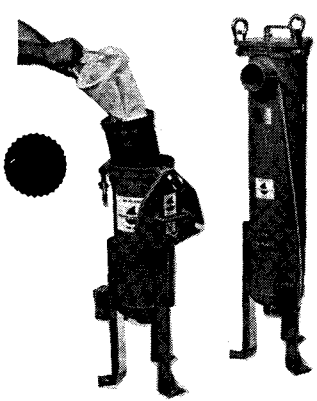

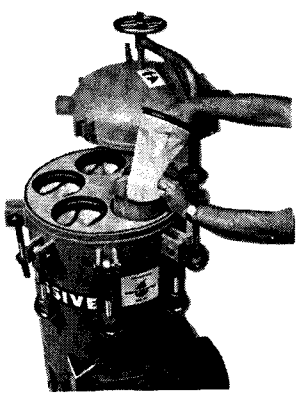

SINGLE BASKET/BAG DESIGN

MODEL PF90—For flow rates to 100 gpm

- Delivers full two square feet of basket or bag surface area without need for ASME code construction
- Pipe sizes 2, 3, or 4-inch, NPT or flanged
- Basket depth—15 inches (nominal)
- Pressure rating: 150 psi (with eyenut cover)
- Side or bottom outlet
- Oven baked epoxy coating of all surfaces

MODEL PF 180—For flow rates to 200 gpm

- Most versatile of the single basket/bag series
- Inner basket or bag option available
- Pipe sizes 2, 3 or 4-inch, NPT or flanged
- Basket depth— 30 inches (nominal)
- Pressure rating: 150 psi (with eyenut cover)
- Side or bottom outlet
- ASME code stamp available
- Oven baked epoxy coating of all surfaces
- Sentinal Alert Pressure Drop Alarm

MULTIBASKET/MULTIBAG DESIGN

- Oven baked epoxy coating
- Inner basket or bag option available
- ASME code stamp available
- In-line connections
- Sentinal Alert Pressure Drop Alarm

Model PF16
Holds 2 baskets/bags. Flows to 400 gpm.
Pipe sizes 2, 3, 4-inch, flanged.

Model PF18
Holds 3 baskets/bags. Flows to 600 gpm.
Pipe sizes 2, 3, 4-inch, flanged.

Model PF22
Holds 4 baskets/bags. Flows to 800 gpm.
Pipe sizes 3, 4, 6-inch, flanged.

Model PF24
Holds 6 baskets/bags. Flows to 1200 gpm.
Pipe sizes 3, 4, 6-inch, flanged.

Model PF30
Holds 8 baskets/bags. Flows to 1600 gpm.
Pipe sizes 4, 6, 8-inch, flanged.

Model PF36
Holds 12 baskets/bags. Flows to 2000 gpm.
Pipe sizes 6, 8, 10-inch, flanged.

Progressive Equipment Corp.
413 East 9th Street Erie, PA 16503
Phone 814/452-4363 • FAX 814/459-3094

Progressive

SINGLE STRAINER/BAG FILTER

MODEL SELECTION

Model No.	Length of baskets	Straining, filtering area, ft²	Standard pipe sizes available, in.	Standard flow rate, gpm	Pressure drop, psi*
PF 90	1(15"L)	2.1	2, 3	100	.3
PF 180	1(30"L)	4.4	2, 3	200	.3

150 psi design

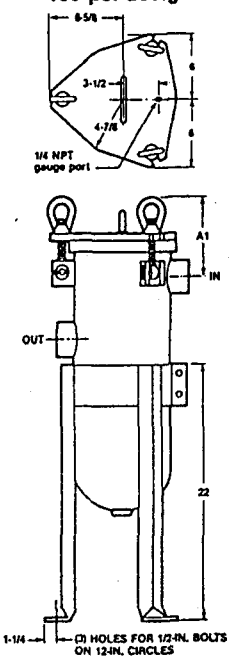

FLANGED (150 lb. ANSI)

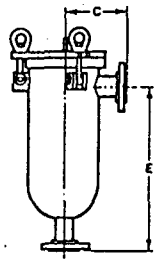

THREADED (NPT)

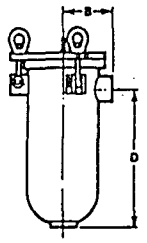

APPROXIMATE DIMENSIONS (inches)

	MODEL PF90 PIPE SIZES		MODEL PF 180 PIPE SIZES	
	2"	3"	2"	3"
A	6.7	8.0	6.7	8.0
B	5.9	6.8	5.9	6.8
C	7.5	7.5	7.5	7.5
D	20.3	20.6	35.3	35.6
E	23.5	23.8	38.5	38.8

MULTIPLE STRAINER/BAG FILTERS

MODEL SELECTION

Model No. (and dia. in inches)	Number of baskets	Straining, filtering area, ft²	Standard pipe sizes available, in.	Standard flow rate, gpm	Pressure drop, psi*
PF16	2	8.8	2, 3, 4	400	1.2
PF18	3	13.2	2, 3, 4	600	1.0
PF22	4	17.6	3, 4, 6	800	1.1
PF24	6	26.4	3, 4, 6	1200	1.2
PF30	8	35.2	4, 6, 8	1600	1.1
PF36	12	52.8	6, 8, 10	2000	1.0

Based on standard flow rate of water through largest pipe size.

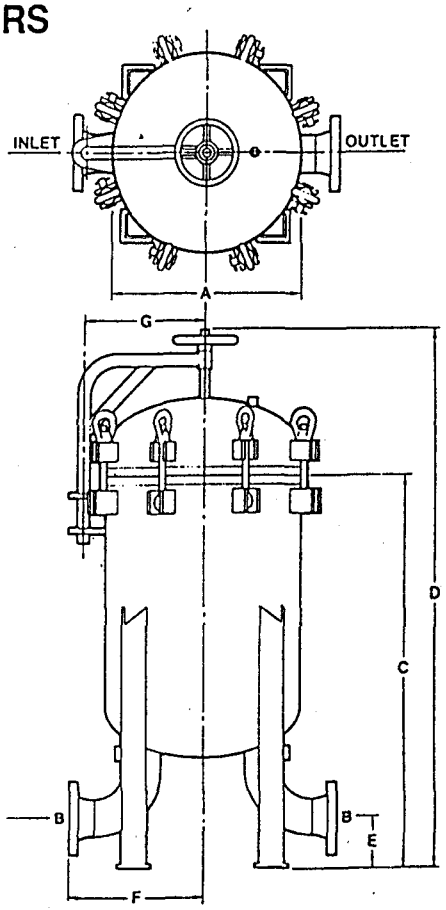

APPROXIMATE DIMENSIONS (inches)

Model Number & dim. A	Port sizes B	C	D	E	F	G	Leg bolt circle dia.	Weight (approx), lb.
PF16	2	40.2	55.2	4.50	10.5	10.9	14.0	400
	3	42.6	57.6	5.25	12.4	10.9	14.0	425
	4	44.8	59.9	6.00	14.0	10.9	14.0	450
PF18	2	40.6	56.1	4.50	11.1	11.9	16.0	410
	3	43.0	58.5	5.25	13.0	11.9	16.0	435
	4	45.3	60.8	6.00	14.6	11.9	16.0	460
PF22	3	43.9	60.4	5.25	13.8	14.0	20.0	500
	4	46.2	62.7	6.00	15.4	14.0	20.0	515
	6	50.4	66.9	7.00	18.9	14.0	20.0	560
PF24	3	44.2	61.2	5.25	14.9	15.0	22.0	535
	4	46.5	63.5	6.00	16.6	15.0	22.0	555
	6	50.6	67.6	7.00	20.1	15.0	22.0	590
PF30	4	47.6	66.1	6.00	18.7	18.0	28.0	665
	6	51.9	70.4	7.00	22.0	18.0	28.0	705
	8	56.4	74.9	8.25	25.7	18.0	28.0	850
PF36	6	53.4	73.4	7.00	24.1	21.0	34.0	870
	8	57.9	77.9	8.25	27.6	21.0	34.0	1010
	10	62.4	82.4	9.50	30.6	21.0	34.0	1150

MANUAL

INSTALLATION AND OPERATION

OF

PROGRESSIVE MULTI-BAG FILTERS

PROGRESSIVE EQUIPMENT CORPORATION
413 EAST NINTH STREET
ERIE, PA 16503
PHONE : 814-452-4363
FAX : 814-459-3094
TOLL FREE: 800-548-6089

IMPORTANT!!

READ AND UNDERSTAND ENTIRE MANUAL
BEFORE OPERATING THIS VESSEL

SAFETY

THIS MANUAL HAS BEEN PREPARED FOR THE SAFE INSTALLATION, OPERATION AND MAINTENANCE OF PEC PRESSURE VESSELS. WARNING LABELS HAVE BEEN RE-PRINTED IN THIS MANUAL. THE APPLICATION OF WARNING LABELS TO VESSELS IS BASED UPON VESSEL TYPE AND ADEQUATE SPACE TO AFFIX LABELS. **WARNING LABELS ARE NOT A SUBSTITUTE FOR READING AND UNDERSTANDING THIS MANUAL.**

LABEL FORMAT

A. HAZARD ALERT WORD

B. HAZARD AND CONSEQUENCE STATEMENT

C. INSTRUCTION STATEMENT

	⚠ WARNING
A. →	IMPROPER USE OF THIS VESSEL CAN CAUSE SERIOUS INJURY, BLINDNESS OR DEATH.
B. →	READ THE VESSEL ASME CODE PLATE, WARNING LABELS, AND THIS INSTRUCTION MANUAL FOR THE INSTALLATION, OPERATION AND MAINTENANCE OF FILTER VESSELS BEFORE INSTALLATION AND OPERATION.
C. →	

ALL LABELS MUST BE REPLACED WHEN LEGIBILITY IS LOST OR VISIBILITY IS BLOCKED. LABELS HAVE A PART NUMBER IN THE LOWER RIGHT HAND CORNER FOR RE-ORDERING.

PROTECTIVE CLOTHING

WARNING: BEFORE OPERATING THIS VESSEL, OPERATOR SHOULD WEAR PROTECTIVE CLOTHING INCLUDING PROTECTIVE GLOVES AND FACE SHIELD. IF HANDLING HOT LIQUIDS, OPERATOR SHOULD WEAR HEAT-RESISTANT CLOTHING SUCH AS NOMEX GARMENTS TO PREVENT POSSIBLE BURNING OR SCALDING. REFER TO MATERIAL SAFETY DATA SHEET (MSDS) FOR SPECIFIC INSTRUCTIONS FOR HANDLING THE LIQUID AS SUPPLIED BY THE MANUFACTURER OF THE MATERIAL.

INSTALLATION

I. MOVING VESSEL

A. MOUNT VESSEL SECURELY TO A SKID AND MOVE SKID WITH FORK LIFT.

B. VESSEL CAN BE LIFTED BY MEANS OF A MULTI-LEGGED SLING CHAIN WITH A SAFETY HOOK ATTACHED TO THE END OF EACH LEG. ATTACH THE HOOK OF EACH LEG TO AN EYENUT AND SPACE LEGS AROUND VESSEL EQUALLY. *(SEE FIGURE 1 - PAGE 2)*

⚠ WARNING
NEVER USE THE LID SUPPORT ARM TO LIFT VESSEL
DAMAGE TO LIFT ASSEMBLY WILL RESULT
VESSEL MAY DROP

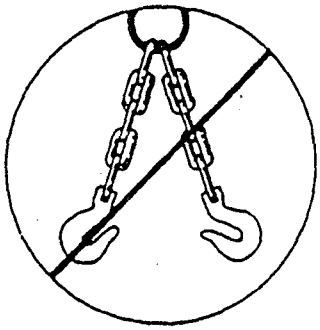

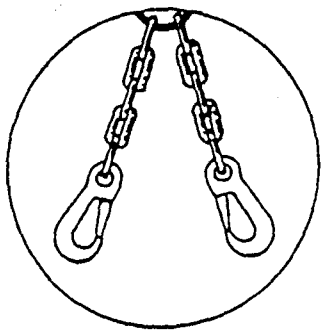

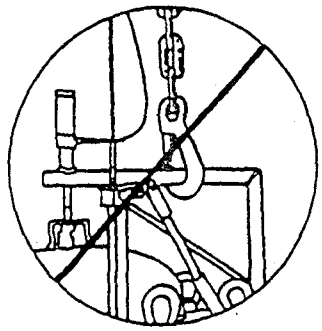

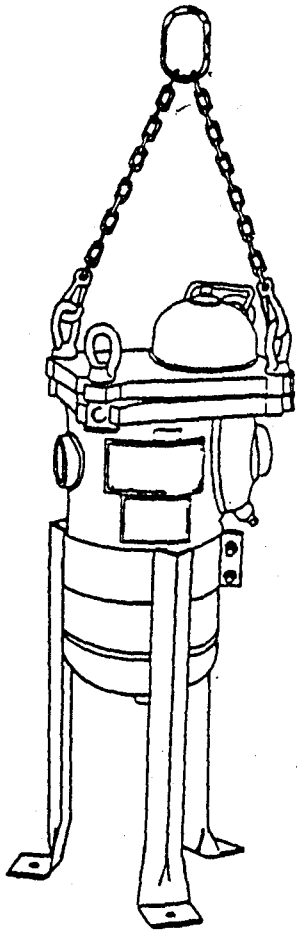

TWO-LEGGED SLING FOR VESSELS WITH (2) OR (4) EYENUTS

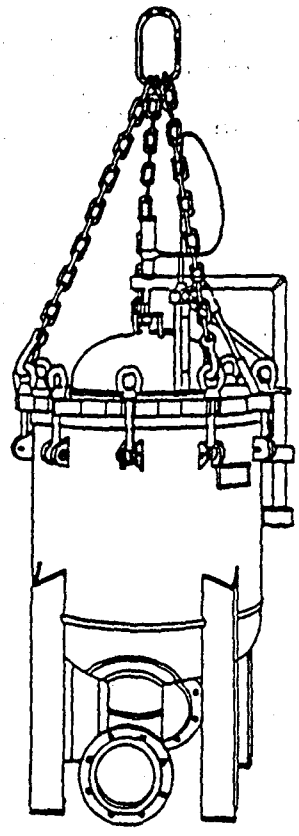

THREE-LEGGED SLING EQUALLY SPACED FOR VESSELS WITH (3) EYENUTS, AND (5) OR MORE EYENUTS

NEVER USE LID SUPPORT (DAVIT) ARM TO LIFT VESSEL.

FIGURE 1

FOR VESSEL WEIGHT, CHECK THE BILL OF LADING

II. PLACEMENT OF MANUAL FOR THE INSTALLATION, OPERATION AND MAINTENANCE OF FILTER VESSELS

THE END USER IS TO LOCATE ONE MANUAL FOR THE INSTALLATION, OPERATION AND MAINTENANCE OF FILTER VESSELS ON EACH VESSEL AT FINAL INSTALLATION SO IT IS VISIBLE AND ACCESSIBLE TO AN OPERATOR.

III. MOUNTING

ALL VESSELS MUST BE PROPERLY BOLTED TO THE FLOOR BEFORE MOVING THE LID. THIS WILL ASSURE VESSEL STABILITY AND PREVENT TIPPING.

NEW FLOOR CONSTRUCTION

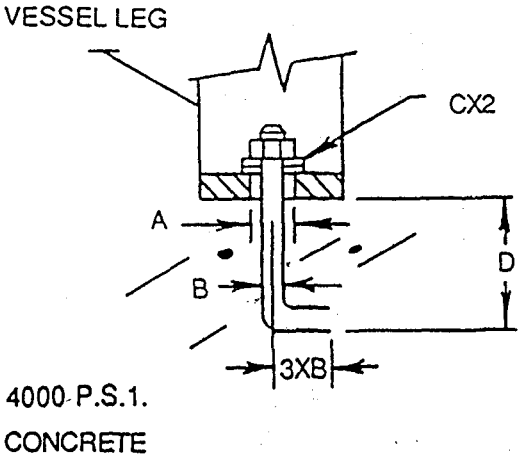

A	B	C			D	
Mounting Plt. Hole Dia.	Anchor Thd. Dia.	Amer. Stnd. Plane Washer			Embed-ment	Min. Pullout
		ID	OD	THK		
17/32 in	3/8	7/16	1	.10	3	4000 lb
13.4 mm	9.5	11	25.4	2.5	76	1814 kg
1 in	1/2	9/16	1-3/8	.13	4	7500 lb
25.4 mm	12.7	14.3	34.9	3.3	101	3402 kg

EXISTING CONCRETE FLOOR

FOR VESSELS PLACED ON EXISTING FLOORS, USE THE FOLLOWING OR AN EQUIVALENT:

RED 1 — CHEM THREADED ANCHOR ROD
RED 1 — CHEM CAPSULES

IV. PIPING

THE PIPING MATERIAL USED SHOULD BE THE SAME AS THE BASE MATERIAL OF THE VESSEL. IT SHOULD HAVE A RATING EQUAL TO OR GREATER THAN THE PRESSURE AND TEMPERATURE RATING OF THE VESSEL.

V. RELIEF VALVE

IT IS THE RESPONSIBILITY OF THE END USER TO PROTECT SYSTEMS COMPONENTS, SUCH AS THE PEC FILTER, FROM BEING OVER PRESSURIZED. THIS CAN BE ACHIEVED BY INSTALLING A SYSTEM RELIEF VALVE.

VI. PRESSURE GAUGE, TEMPERATURE GAUGE, AND VENT VALVE

PEC DOES NOT SUPPLY THE VESSEL PRESSURE GAUGE, TEMPERATURE GAUGE, OR THE VENT VALVE. IT IS THE RESPONSIBILITY OF THE END USER TO OBTAIN, INSTALL AND MAINTAIN THE PROPER GAUGE, INDICATING VESSEL TEMPERATURE AND INTERNAL VESSEL PRESSURE. REFER TO SENTINAL PRESSURE DROP ALERT SYSTEM AND BARKSDALE SWITCH INFORMATION SHEETS.

VII. GASKET

⚠ WARNING
GASKETS CAN FAIL, CAUSING SERIOUS INJURY AND/OR BLINDNESS. GASKET MATERIAL MUST BE CHEMICALLY AND TEMPERATURE COMPATIBLE WITH FLUID BEING FILTERED.

NOTE THE OPERATING TEMPERATURE OF A GASKET MATERIAL CHANGES WITH RESPECT TO THE FLUID TEMPERATURE AND CHEMICAL CONCENTRATION.

EACH PEC. GASKET IS LABELED TO SHOW THE VESSEL TYPE IT WILL FIT AND THE GASKET MATERIAL.

VIII. SYSTEM CHECK

IT IS ADVISABLE TO HYDRO-STATICALLY TEST THIS VESSEL WITH WATER TO DETERMINE IF THERE ARE ANY LEAKS IN THE SYSTEM.

MAINTENANCE

MANUAL LIFTING DEVICE:

THIS DEVICE CONSISTS OF A THREADED STUD WELDED TO THE LID AND AN INTERNALLY THREADED CRANK HANDLE.

A. KEEP THREADS CLEAN AND WELL LUBRICATED WITH A LUBRICANT ACCEPTABLE FOR THE CUSTOMER'S APPLICATION.

B. THREADS SHOULD BE INSPECTED PERIODICALLY FOR WEAR AND TEAR. SHOULD THE WEAR BECOME EXCESSIVE, PARTS SHOULD BE REPLACED BY AUTHORIZED PARTS.

C. LUBRICATE THE SUPPORT AND SWIVEL BLOCKS OF THE DAVIT ARM WHICH SUPPORTS THE LID WHEN OPENED.

OPERATION

⚠ WARNING
HOT AND/OR CHEMICALLY ACTIVE LIQUIDS CAN CAUSE SERIOUS INJURY AND BLINDNESS.

BEFORE OPERATING THIS VESSEL, OPERATOR SHOULD WEAR PROTECTIVE CLOTHING, INCLUDING PROTECTIVE GLOVES AND FACE SHIELD. IF HANDLING HOT LIQUIDS, OPERATORS SHOULD WEAR HEAT RESISTANT CLOTHING, SUCH AS NOMEX GARMENTS, TO PREVENT POSSIBLE BURNS.

REFER TO THE MATERIAL SAFETY DATA SHEET (MSDS) FOR SPECIFIC INFORMATION ON MATERIAL. THE MSDS IS SUPPLIED BY THE MANUFACTURER OF THE MATERIAL.

⚠ WARNING
DO NOT EXCEED THE OPERATING LIMITS OF THIS VESSEL AND GASKET. SERIOUS INJURY OR DEATH CAN RESULT IF LIMITS ARE EXCEEDED.

FOR MAXIMUM PRESSURE, CHECK A.S.M.E. CODE PLATE OF VESSEL.

FOR MAXIMUM TEMPERATURE OF VESSEL, CHECK A.S.M.E. CODE PLATE.

FOR MAXIMUM OPERATING TEMPERATURE OF GASKET, CALL PEC 800-548-6089. THE MAXIMUM GASKET OPERATING TEMPERATURE CAN CHANGE WITH CHANGES IN FLUID, CHEMICAL COMPOSITION, TEMPERATURE, AND PRESSURE.

NOTE: DO NOT EXCEED THE LESSER OF THE TWO MAXIMUM TEMPERATURES.

I. INITIAL CLOSING OF VESSEL LID
VESSEL MUST BE ISOLATED FROM SYSTEM — PUMP TURNED OFF AND LOCKED OUT; INLET AND OUTLET VALVES CLOSED.

A. INSERT BASKET INTO SEAT. THE BASKET RIM FLANGE MUST COVER ENTIRE OPENING. IF NOT, THE BASKET MAY COCK AND BE FORCED THROUGH THE OPENING UNDER PRESSURE.

B. INSERT NEW FILTER ELEMENTS, MAKING SURE THAT ALL BAGS OR CARTRIDGES ARE PROPERLY SEATED. SNAP RING BAGS MUST HAVE THE SALVAGE ON THE INSIDE OF THE BAG TO PREVENT BYPASS.

C. INSPECT GASKET GROOVE AND GASKET. IF GASKET IS NICKED OR WORN, REPLACE ONLY WITH PEC REPLACEMENT PARTS. FOR ORDERING REPLACEMENTS, REFER TO VESSEL MODEL NUMBER AND SERIAL NUMBER.

D. INSERT GASKET, MAKING SURE GASKET IS NOT TWISTED, AND IF A LIP TYPE GASKET IS USED, THE LIPS ARE POINTING INWARD IF GASKET WANTS TO ROLL OUT OF GROOVE, STRETCH GASKET SLIGHTLY BY HAND, INSPECT GASKET SEAM, AND REFIT INTO GROOVE.

E. POSITION LID FOR CLOSING.

1. LIDS WITH NO LIFT MECHANISM — LID NUTS MUST BE UNSCREWED FAR ENOUGH TO ALLOW THE LID TO REST ON THE GASKET FREELY AND PARALLEL TO THE VESSEL COLLAR PLATE.

2. LIDS WITH A CRANK.

   a. ROTATE LID OVER VESSEL SO THE EYE NUT AND BOLT BRACKET ARE IN LINE.

   b. TURN CRANK TO LOWER LID.

   c. REALIGN BRACKETS, IF NECESSARY, BEFORE LID SETS DOWN ON VESSEL BODY.

⚠ WARNING
A FALLING LID CAN CAUSE SERIOUS INJURY AND LOSS OF LIMB. NEVER PLACE HANDS, FINGERS, OR LIMBS BETWEEN LID AND VESSEL.

F. ENGAGE ALL BOLTS. HAND TIGHTEN NUTS.

G. TIGHTEN NUTS (SEE TORQUE CHART) TORQUE BOLTS AT 180° TO EACH OTHER, ROTATING AROUND THE VESSEL UNTIL TIGHT.

H. CLOSE VENT VALVE.

I. TURN PUMP ON.

J. OPEN OUTLET VALVE.

K. OPEN INLET VALVE SLOWLY AND OBSERVE FOR LEAKS. SHOULD ANY LEAKS APPEAR, CLOSE VALVE IMMEDIATELY AND CONTINUE WITH PART II.

II. OPENING AND CLOSING OF THE VESSEL LID

ADHERE TO THE FOLLOWING SEQUENCE.

⚠ DANGER
DO NOT OPEN A VESSEL UNDER PRESSURE. ESCAPING FLUID UNDER PRESSURE CAN CAUSE SERIOUS INJURY AND BLINDNESS.

A. BEFORE OPENING VESSEL

1. TURN OFF PUMP AND LOCK IT OUT
2. CLOSE INLET AND OUTLET VALVE

B. OPEN VENT VALVE. MAKE SURE THAT THE VALVE OUTLET IS SO PIPED THAT ESCAPING FLUIDS ARE SO DIRECTED TO PREVENT PERSONAL INJURY OF THE OPERATOR AND SURROUNDING AREA.

C. CHECK PRESSURE GAUGE TO MAKE SURE THAT THE ISOLATED VESSELS' INTERNAL PRESSURE IS ZERO PSI GAUGE.

D. DRAIN FLUID FROM VESSEL BY GRAVITY FLOW THROUGH DRAIN VALVE. CLOSE DRAIN VALVE. EVACUATION CAN BE ASSISTED WITH PRESSURIZATION.

E. LOOSEN LID NUTS AND SWING NUT AND BOLTS FREE OF LID.

F. LIFT LID.

⚠ WARNING
A FALLING LID CAN CAUSE LOSS OF LIMB. SAFETY PIN MUST BE ENGAGED WHEN LID IS OPEN.

G. ROTATE LID OFF OF VESSEL.

H. REMOVE FILTER BAG OR CARTRIDGES WITH CAUTION.

I. INSPECT BASKET FOR ROUNDNESS AND FLANGE CONDITION.

J. VERIFY THAT BASKET AND BAG BEARING SURFACES ARE CLEAN AND FREE OF NICKS.

K. INSERT NEW FILTER ELEMENTS, MAKING SURE THAT ALL BAGS OR CARTRIDGES ARE PROPERLY SEATED. SNAP RING BAGS MUST HAVE SALVAGE ON INSIDE OF BAG.

L. REMOVE GASKET, CLEAN GASKET GROOVE. IF GASKET IS WORN OR NICKED, REPLACE ONLY WITH PEC REPLACEMENT PARTS. FOR CORRECT REPLACEMENTS, REFER TO THE VESSEL MODEL NUMBER AND SERIAL NUMBER. USE ONLY PEC. AUTHORIZED GASKETS.

M. ROTATE LID OVER VESSEL AND ALIGN BOLT AND NUT BRACKETS.

N. CLOSE LID. SAME AS E1

O. SAME AS I. F.

P. SAME AS I. G.

Q. SAME AS I. H.

R. SAME AS I. I.

S. SAME AS I. J.

T. SAME AS I. K.

IF A VESSEL STILL LEAKS, DEPRESSURIZE VESSEL AND RETORQUE BOLTS
IF VESSEL LEAKAGE CONTINUES, CALL PEC

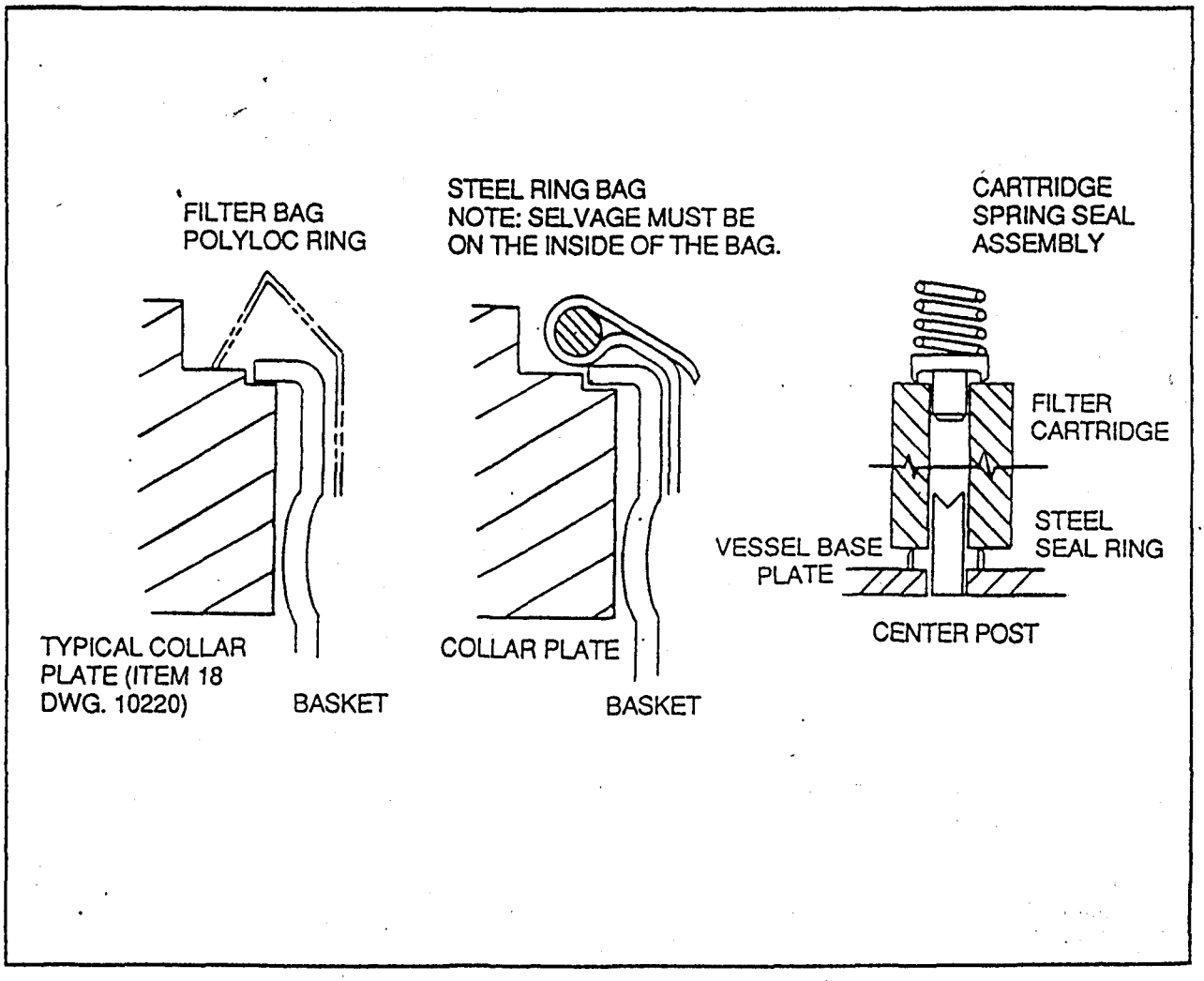

FIGURE 5

GASKET INSTALLATION

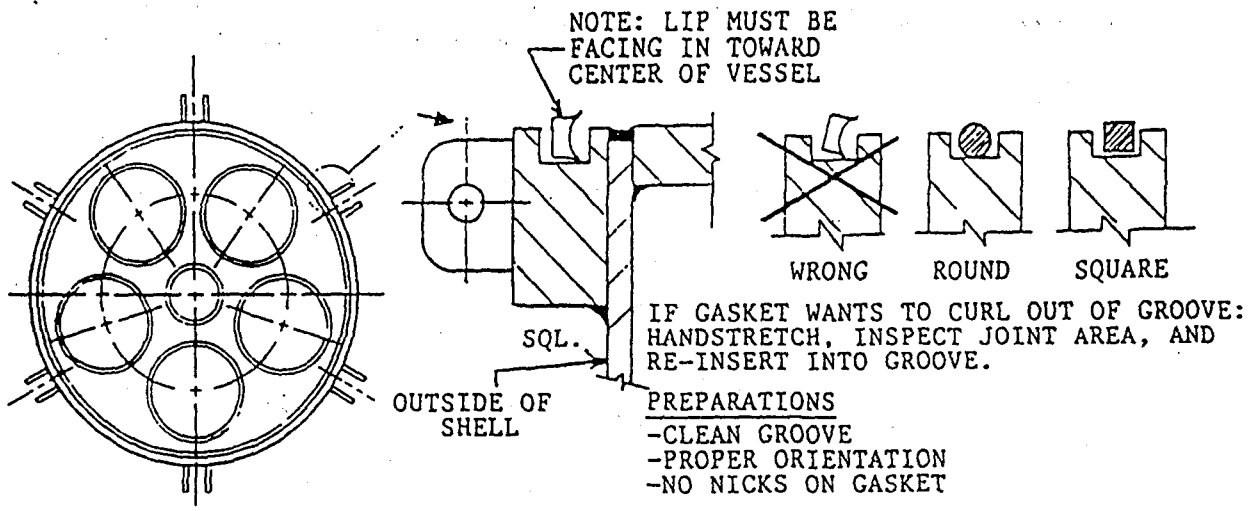

FIGURE 6

BOLT TIGHTENING SEQUENCE

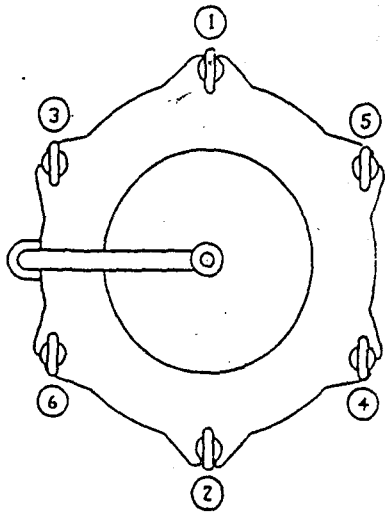

A) HAND TIGHT FIRST
B) TORQUE 1/2
C) FULL TORQUE

THREAD SIZE	TORQUE FT. LBS.
1/2	100
5/8	100
3/4	150
7/8	200
1"	220
1-1/8"	240

FIGURE 7

- BOLT MATERIAL — SA193-B7, B-8
- NUT MATERIAL — SA194-1, -8
- * THE TIGHTENING TORQUE VALUES ARE BASED UPON THE THREADS BEING CLEAN AND DRY.
- TORQUE IS A MEASURE OF FRICTION, NOT CLAMP LOAD.

BECAUSE OF THE MANY INTERRELATED VARIABLES THAT DIRECTLY OR INDIRECTLY AFFECT FRICTION, SUCH AS SURFACE TEXTURE, TYPE OF COATING OR FINISH, LUBRICATION, SPEED OF TIGHTENING, HUMAN ERROR, ETC., IT IS POSSIBLE TO EXPERIENCE AS MUCH AS ± 25% DEVIATION IN PRELOAD (CLAMPLOAD) WITH THE USE OF A TORQUE WRENCH.

AFTER TORQUING IS COMPLETE, IT IS IMPERATIVE TO VISUALLY CHECK THAT THE GASKET HAS BEEN COMPRESSED EQUALLY AROUND THE VESSEL AND THAT THE LID AND VESSEL BODY ARE AS CLOSE TO METAL-TO-METAL CONTACT AS POSSIBLE.

BLOW DOWN PROCEDURE

TO AID FILTER ELEMENT CHANGES, THE LIQUID IN THE VESSEL CAN BE EVACUATED PRIOR TO THE CHANGE.

WARNING: THE GAS USED FOR BLOW DOWN MUST BE STABLE IN THE ENVIRONMENT OF THE FLUID BEING EVACUATED.

1. CLOSE INLET VALVE.
2. CLOSE OUTLET VALVE.
3. OPEN VENT VALVE.
4. CHECK GAUGE — INTERNAL PRESSURE MUST BE ZERO.
5. OPEN DRAIN VALVE.
6. CLOSE VENT.
7. CONNECT GAS TO VESSEL VIA VENT VALVE. USE ONLY IF GRAVITY EVACUATION DOES NOT YIELD DESIRED RESULTS.
8. OPEN VENT VALVE SLOWLY.
9. CLOSE VENT VALVE AFTER METERING OUT FLUID.
10. DISCONNECT GAS.
11. CLOSE DRAIN VALVE.
12. MAKE SURE INTERNAL PRESSURE IS ZERO AND CONTINUE WITH OPENING INSTRUCTIONS.

FILTER IN OPERATION

ONCE THE FILTER IS OPERATIONAL AND IN USE, THE DIFFERENTIAL PRESSURE SHOULD BE CHECKED REGULARLY. IT IS SUGGESTED THAT WHEN THE DIFFERENTIAL PRESSURE ACROSS THE FILTER ELEMENTS REACHES A PREDETERMINED AMOUNT, THE ELEMENTS BE CHANGED. IF THE DIFFERENTIAL PRESSURE SUDDENLY DROPS, STOP FILTRATION IMMEDIATELY AND CHECK BAGS FOR PROPER SEAL OR RUPTURE.

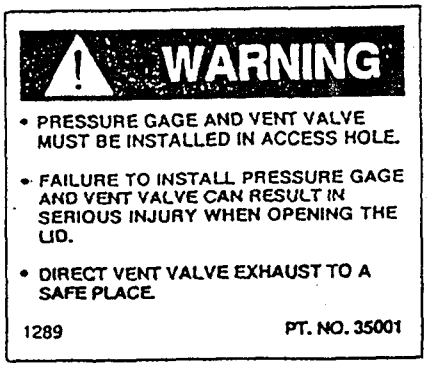

⚠ WARNING

- GASKET SEAL MAY LEAK OR SQUIRT FLUID UNDER PRESSURE IF THE LID OPENING AND CLOSING INSTRUCTIONS ARE NOT FOLLOWED.
- SQUIRTING FLUID CAN CAUSE SERIOUS INJURY OR BLINDNESS.
- READ THE MANUAL FOR INSTALLATION, OPERATION, AND MAINTENANCE OF FILTER VESSELS.
- WEAR PROTECTIVE CLOTHING.
- WEAR FACE SHIELD.
- BEFORE OPENING, TURN PUMP OFF AND LOCK IT OUT.
- CLOSE INLET AND OUTLET VALVE.
- OPEN VENT SLOWLY-DIRECT EXHAUST TO SAFE PLACE.
- INTERNAL PRESSURE SHOULD BE ZERO(0) PSI GAGE.
- DRAIN FLUID VIA DRAIN VALVE.
- CLOSE DRAIN VALVE.
- UNBOLT LID LUGS.
- LIFT LID.
- ENGAGE LID SAFETY PIN (IF APPLICABLE).
- ROTATE LID, UNCOVERING VESSEL.
- CHANGE FILTER ELEMENT.
- REMOVE GASKET, CLEAN GASKET GROOVE AND GASKET.
- INSPECT GASKET GROOVE AND LID SEALING AREA FOR DAMAGE.
- REPLACE DAMAGED PARTS WITH PEC REPLACEMENT PARTS ONLY.
- REPOSITION LID, DISENGAGE SAFETY PIN AND LOWER LID ONTO VESSEL SLOWLY.
- REPLACE WASHERS UNDER NUTS IF NECESSARY.
- ENGAGE ALL BOLTS, HAND TIGHTEN NUTS.
- NUT AND BOLT THREADS TO BE FREE OF RUST AND FOREIGN MATTER.
- TORQUE NUTS (SEE TORQUE CHART) AT 180° TO EACH OTHER ROTATING AROUND VESSEL UNTIL TIGHT.
- CLOSE VENT VALVE.
- ACTIVATE PUMP.
- OPEN INLET VALVE SLOWLY. OBSERVE FOR LEAKS. IF LEAK APPEARS, CLOSE VALVE AND START OVER.
- IF THERE ARE NO LEAKS, OPEN OUTLET VALVE SLOWLY.

1289 PT. NO. 35004

⚠ WARNING

- VESSEL AND OR GASKET CAN FAIL IF OPERATING LIMITS ARE EXCEEDED.
- A FAILURE CAN CAUSE SERIOUS INJURY, BLINDNESS, OR DEATH.
- DO NOT EXCEED MAXIMUM OPERATING PRESSURE PER VESSEL CODE PLATE.
- CHECK TEMPERATURE RANGE ON VESSEL CODE PLATE.
- CHECK TEMPERATURE RANGE OF GASKET MATERIAL WITH RESPECT TOP FLUID BEING FILTERED.
- DO NOT EXCEED THE LESSER OF THE TWO OPERATING TEMPERATURES.
- SECURE LID BY TIGHTENING LID EYENUTS.
- READ THE MANUAL FOR THE INSTALLATION, OPERATION, AND MAINTENANCE OF FILTER VESSELS.

1289 PT. NO. 35000

⚠ WARNING

- RAISED LID MAY FALL IN THE EVENT OF A HYDRAULIC OR MECHANICAL FAILURE.
- A FALLING LID CAN SERIOUSLY INJURE OR CAUSE LOSS OF LIMB.
- REFER TO OPERATING & MAINTENANCE INSTRUCTIONS.
- READ AND UNDERSTAND THE FOLLOWING INSTRUCTIONS:
  - NO BODILY PARTS UNDER THE LID AT ANY TIME.
  - WEAR EYE PROTECTION IN CASE OF HYDRAULIC COMPONENT RUPTURE.
  - ENGAGE LID SAFETY LATCH WHERE APPLICABLE.

1289 PT. NO. 35003

⚠ WARNING

- IF IMPROPERLY USED THIS VESSEL CAN CAUSE SERIOUS INJURY, BLINDNESS OR DEATH.
- READ ALL WARNING LABELS AND MANUAL FOR INSTALLATION, OPERATING/MAINTENANCE OF FILTER VESSEL BEFORE USE.

PT. NO. 35005

Progressive Equipment Corp.
413 East 9th Street
Erie, PA 16503 • 814/452-4363
Fax 814/459-3094

- PREVENTIVE MAINTENANCE GUIDELINES -

FOR

PROGRESSIVE'S ELECTRONIC WATER TREATMENT
AND
FILTRATION SYSTEMS

I. ELECTRONIC WATER TREATER

A. Power Supply Light Function (Daily Check)

1. Red light should be constantly on during normal operation.

2. Check lights by depressing test button.
White, red, amber lights should come on.

3. Replace any burned out bulbs.

4. If any light, other than the RED (Normal Operation), is on or blinking, refer to Trouble Shooting Chart in Operator's Manual, page 8 of Catalog M-100, or inside the back of power supply enclosure.

B. Process (system) Water Conductivity Test (Daily Check)

1. Using Progressive's Portable Water Tester, measure conductivity of system water at pump tank or tower basin and record readings in a log book.

2. Conductivity of system water should be maintained approximately 200-300 PPM (parts per million) above the raw, make-up water.
Example: Make-up water = 150 PPM
then system water should not exceed 350-450 PPM.

3. The portable water tester will give a reading in micro MHOs (conductivity). Use the conversion chart on the side of the tester to find the corresponding value in PPM total dissolved solids (TDS).

4. A slight up or down fluctuation from day to day is not unusual. However, should you notice a continual increase day after day, check the operation of your Automatic Drain Valve or blow down/ bleed off system. If Progressive's Auto-Drain Valve is installed, refer to Catalog MV-300 for timer setting adjustments.

5. The conductivity of incoming, make-up water can change periodically. If TDS level of make-up water raises or lowers, the system water will change proportionately.

C. Miscellaneous

1. On a yearly basis, treater should be by-passed and removed from piping system to visually check the inlet/outlet ports for any scale build-up on electrode and barrel I.D.

2. Progressive recommends returning the power supply and treater assembly to the factory at three (3) year intervals for a thorough cleaning, bench test, and update of all components.

C. Miscellaneous - continued

Cost for this service is dependent on extent of work required and advised prior to any necessary repairs. Equipment is returned to you with a full, One (1) Year Warranty if actual repair is performed.

3. If deemed necessary, an on site acid wash of the treater internals can be performed by your maintenance personnel in lieu of returning unit to our factory. An acid wash procedure is attached.

4. When the Electronic Water Treater is installed on an existing system where scale build-up may already be present, it is recommended that heat exchangers, flow control valves, on any slow flowing areas within the piping system be periodically checked for any loose build-up of solids which may have been etched away from other areas and re-deposited in these restricted or slower flowing areas. (Full Flow Filtration alleviates this condition).

5. Remember, the Electronic Water Treater is designed and sized to operate under turbulent flow conditions and, in the case of Open Recirculating Systems, should treat 100% of water flow to process. When equipment is in operation and demanding water flow, the treater should always be powered ON and on line. Check to be sure treater is not being by-passed under normal conditions.

II. FULL FLOW BAG FILTERS

A. Filter Media Selection

1. Progressive Equipment supplies 5 micron filter bags as the standard filter media for all filters. The filters are designed and sized to each application to handle 100% full flow at a pressure drop across the filter of 1 to 2 PSI with a maximum of filtration efficiency.

2. When installing the Progressive Filter on an existing system in conjunction with the Progressive Electronic Water Treater, it is highly recommended to initially utilize a more porous filter media. The Electronic Water Treater will etch away existing scale built up on internal surfaces of piping, heat exchangers, etc. in a variety of particle sizes. To minimize filter changing while maintaining effective filtration, filter bags with ratings between 50 and 100 micron should be used until system is cleaned up and filter change frequency has stabilized.

3. Progressive offers both disposable and reusable filter bags in a variety of ratings and materials. Disposable bags should not be cleaned and reused more than once as they are normallly constructed of felt which is both an efficient and economic filter media. It entraps particulate within the fibers making it impractical to clean or flush. Although reusable filter bags are higher priced, their life expectancy will generally offset the cost difference.

B. Sentinal Remote Alarm System

1. The Progressive Filter is supplied standard with a Differential Pressure Drop Alarm. This alarm is factory set to both audibly and visually alert operator/maintenance personnel of the need to replace the filter bag(s) at a 5-7 PSI drop.

2. Pressure gauges should be installed directly before and after the filter for constant visual verification of pressure drop and calibration of the Sentinal Alarm. Pressure gauges can be furnished by Progressive as an option. Adjustments are easily made - (see Brochure #SN100).

3. Be certain annunciator horn switch is in the ON position during normal operation.

C. Miscellaneous

1. When replacing filter bags, be sure to completely by-pass the filter and vent any remaining pressure from the filter vessel before opening.

2. Visually inspect the inside surfaces of the filter vessel and the stainless steel retainer basket for any lodged material or damage.

3. Periodically lubricate filter o-ring seals, as needed, with a silcone base grease for easier seal and longer life.

4. Make certain the filter bag is fully inserted in the stainless retainer basket. Failure to do so can reduce filtering capabilities and create an improper seal on basket and it can also damage the filter bag.

III. GENERAL

A. Auto Drain Valve (Progressive #ADV-1)

1. Check function of drain valve by depressing test button on side of activator housing.

2. Timer setting procedure is outlined in Catalog MV-300 (attached) and is displayed on the inside cover of the enclosure.

B. Tower/Tank

1. On a weekly basis, a visual inspection of the cooling tower and basin and pump tank (if included), should be performed to check for any precipitated or airborne contaminants. If noticeable, check operation of filter system.

2. During the warm summer months, the cooling tower decking and basin could begin to show signs of algae growth. If this happens, a shock treatment of chlorine should be administered. Consult the factory for recommended dosage.

III. GENERAL - continued

C. Piping and Related Equipment

1. Any dissimilar metals directly connected within the piping system can cause accelerated corrosion brought on by galvanic action. Be sure any joints or connections of dissimilar metals such as, steel to copper, are separated with a dielectric fitting like PVC.

2. Check to see if pumps and piping are adequately sized to provide turbulent flow at pressures in the 60 to 70 PSI range.

D. pH of System Water

1. Progressive Equipment's Electronic Water Treater is designed to operate effectively throughout a wide range of water pH conditions. The pH of both incoming make-up and system water should, however, be monitored periodically and if it is found to be 6.8 pH or lower, the system water should be adjusted back to neutral (7.0). If water remains in the acidic state, it will substantially increase the corrosion rate within the system.

IV. RECOMMENDED SPARE PARTS

A. Electronic Water Treater

1. QTY: 1 ea. for HV-1 Power Supply	Red Indicator Light #R12V Amber Indicator Light #A12V White Indicator Light @W12V
2. QTY: 1 ea.	Slo Blo Fuse #3AG-1/8
3. QTY: 2 ea.	Indicator Bulb for HV-3 Power Supply

B. Full Flow Bag Filter

1. QTY: 2 ea.	Main Cover Seal - contact factory for Part No. for your model filter.
2. QTY: 1 ea.	Fuse for Sentinal Alarm

C. Automatic Drain Valve

1. QTY: 1 ea.	Lower Valve Assembly (Std. is 1") P/N - 1-AD-70-145-01
2. QTY: 1 ea.	Seal Kit for Lower Valve (Std. is 1") P/N - 1-AD-SK

Consult factory for price and delivery. Most items in stock.

CAUTION

DO NOT PLACE OBJECTS

THROUGH INLET/OUTLET PORTS

THIS WILL DAMAGE INNER

ELECTRODE & VOID

WARRANTY

PROGRESSIVE EQUIPMENT CORPORATION

ADDRESSES COMMON PROCESS WATER PROBLEMS

I. Biological Fouling

A. Causes

Direct exposure to sunlight causes algae growth which can foul an entire water system. The biggest potential for biological growth in a cooling tower system is the cooling tower module.

B. Recommended Approaches for Correction

Shading the cooling tower or selecting a tower that will inhibit sunlight from entering the wet deck will reduce the number of shock treatments necessary to retard algae growth.

Periodic shock treatment with a chlorine based algaecide will treat recurring bacterial growth. Applications of the algaecide should be scheduled for Spring - March/April, Summer - June/July, and late Summer - August/September.

The concentration of chlorine required to control plankton and algae in reservoirs varies from 0.2 to 3.0 ppm, depending on the sensitivity and type oforganisms present. Concentrations as great as 50 ppm may be needed to destroy some types.

Progressive Equipment now offers Dip Slides, Ultra Violet and Ozone. It is our opinion that Chlorine will be banned in the near future. Progressive offers Ultraviolet and Ozone Generators.

C. Treatment Effects

Your Progressive electrosatic water treatment and full-flow filtration system will eliminate the need for constant biocide treatment in most cases.

The 75 to 5 micron efficiency of full-flow filtration will remove nearly 100% of suspended particulate matter along with the airborne organic matter introduced through the cooling tower. As a result, the cleanliness of the treated and filtered water drastically reduces the environment that promotes biological activity.

With the proper location of the Progressive treater and filter, all of the residue from the chlorine shock treatment will be removed from the filters before it can enter the water cooled equipment. This eliminates the risk of "plugging" heat exchangers and valuable production machinery.

Progressive offers complete design and engineering assistance to help select a system to meet your needs most effectively.

II. Corrosion/Erosion

A. Definition

Corrosion/erosion is an eating away of the metal of pipes from interior outward.

B. Recommended Approaches for Correction

1. Corrosion caused by low pH -- when system pH is below 7, a small amount of liquic caustic can be added to bring the pH out of the acid state to the range of 7.0 - 7.2.

   Because of evaporation, the pH of a cooling tower system normally ranges between 7.0 and 8.0. With the Progressive system, no chemical adjustments are necessary.

   Progressive will notify you of your water condition prior to quoting and/or installing the system through our water analysis service.

2. Dissimilar metals (copper to steel/aluminum to steel) will cause corrosion and should be corrected in the plumbing. Any suitable dielectric will solve this corrosive condition. Note: The Progressive electronic water treater does not cause any electrolysis to any system. There is absolutely no current flow introduced into the water stream.

3. Corrosion is also influenced by the amount of dirt or solids within the system. Because of the high efficiency of Progressive treatment and full-flow filtration, this corrosive influence is practically eliminated from the system.

4. Standing water or quiet, no-flow areas will contribute to corrosion as well. When equipment is idle for extended periods of time, the water should be drained from the system as in "dry layup". If this is not possible, a corrosion inhibitor can be added during a "wet layup".

5. Velocity corrosion: This condition is actually erosion which can occur in elbows and orifices that cause a nozzle effect. The Progressive system will not eliminate this type of erosion.

Note: Corrosion inhibitors will not adversely affect the Progressive electronic water treatment results, nor will it damage the treater or filter housings.

III. System Checks

A. Conductivity

Use the Progressive portable conductivity meter daily to keep a record of total dissolved solids. If the reading continually rises, system correction is in order.

The Progressive automatic drain valve, a timed blow down system is factory-adjusted to control total dissolved solids. It is programmable and adjustable.

B. Water Analysis

Progressive Equipment Corporation provides a water sample analysis service for customers. Purchase price of the system includes three water tests over the initial 90-day period after installation. These water tests are free of charge.

After the 90 day period, Progressive will test water samples for a nominal fee as a courtesy.

For answers to any other questions, contact our Customer Service department at 1-800-548-6089. We are ready to assist you.

Additional Resources

Betz Handbook of Industrial Water Conditioning, 7th Edition, Betz Laboratories, Inc., Trevose, PA, 1976

The Nalco Water Handbook, McGraw Hill, New York, NY 1979

Progressive Equipment Corp.
413 East 9th Street
Erie, PA 16503 • 814/452-4363
Fax 814/459-3094

AUTOMATIC BYPASS OPERATING INSTRUCTIONS

After Installation of the filter, actuated 3-way bypass, check valves, and sentinal alarm the system must be manually cycled to insure proper and normal operation.

To accomplish this, simply turn the sentinal alarm on. The 3-way bypass will cycle to allow flow through the filter (if it is not already in that position). At this point the sentinal alarm will indicate "normal" operation and flow through the "filter". To cycle the system, connect the normally open and common contacts of the pressure differential switch located on the filter using a jumper wire. This will cause the alarm to sound and the 3-way bypass will cycle to bypass the filter. Now the sentinal alarm will indicate "normal" operation and flow through the "bypass". Also the alarm will be sounding if not silenced. Remove the jumper wire from the pressure differential switch and press the "reset" button to cycle the 3-way bypass for flow through the filter and normal operation.

Note: An experienced electrician is recommended to manually cycle the system.

Once the system has been cycled and is in normal operation there is very little maintenance except changing the filter bags. This occurs when the pressure differential switch senses a 5-7 psi drop in pressure. When this happens the alarm sounds and the 3-way bypass cycles to "bypass" the filter. To change the filter bag you must first release and vent the pressurized water from the filter to a safe place. Then remove the lid and swing free to remove old bags and to replace with clean bags. Replace and tighten lid (refer to filter vessel owners manual). Now that the filter is ready to resume filtration simply press the reset button and the 3-way bypass will automatically switch to allow flow through the filter. At which time the sentinal alarm will stop sounding and it will indicate "normal" operation and flow through "filter".

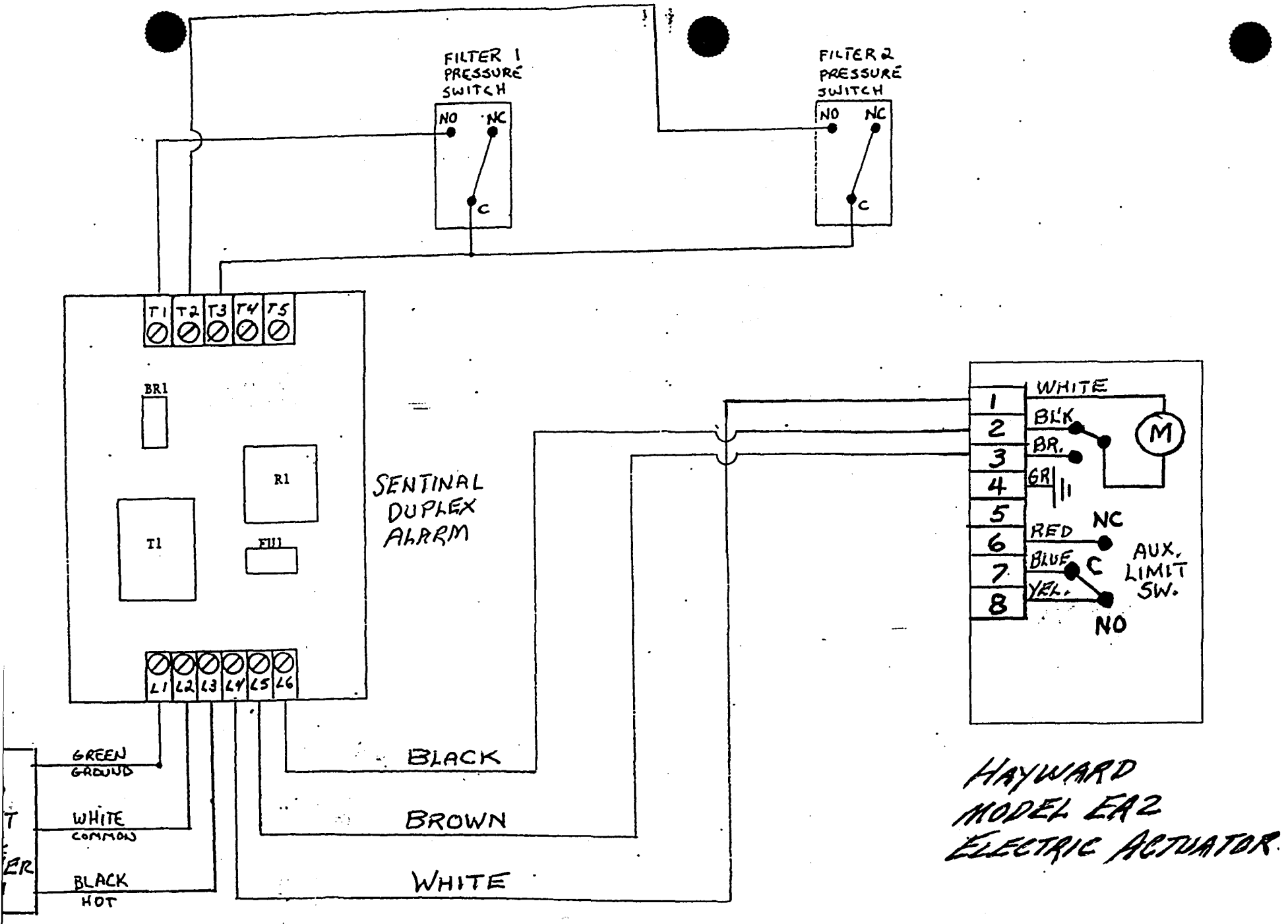

HAYWARD

DUAL FILTER WIRING SCHEMATIC

progressive

sentinal remote alarm & automatic actuator by pass/ alarm systems

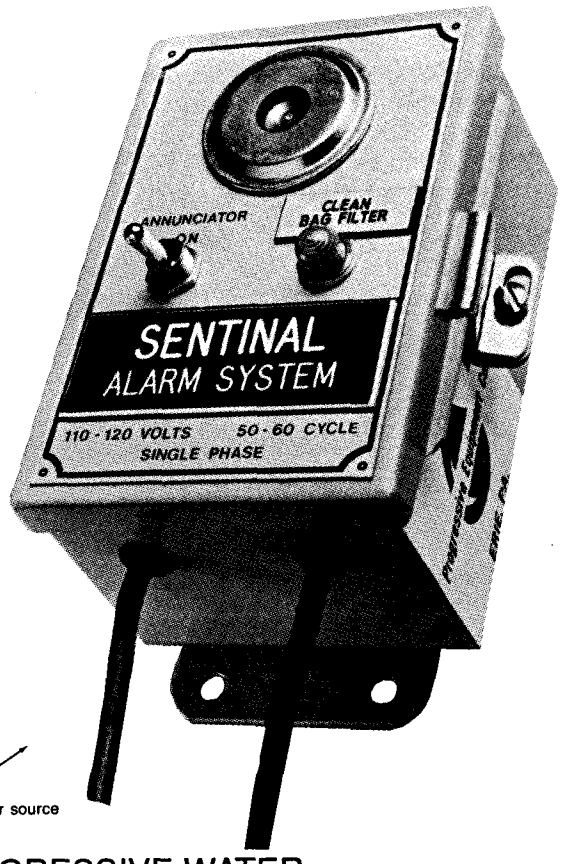

The monitoring capabilities of your PROGRESSIVE WATER TREATMENT SYSTEM can be extended with the SENTINAL REMOTE ALARM HORN.

- **Works in conjunction with any and all filtering equipment**
- **Operates on its own power supply**
- **Horn is synchronized with a blinking light**
- **Can be located up to 500 feet from filter device**
- **On/Silent switch shuts off horn**
- **Monitors pressure difference down to 5 P.S.I.**

INSTALLATION

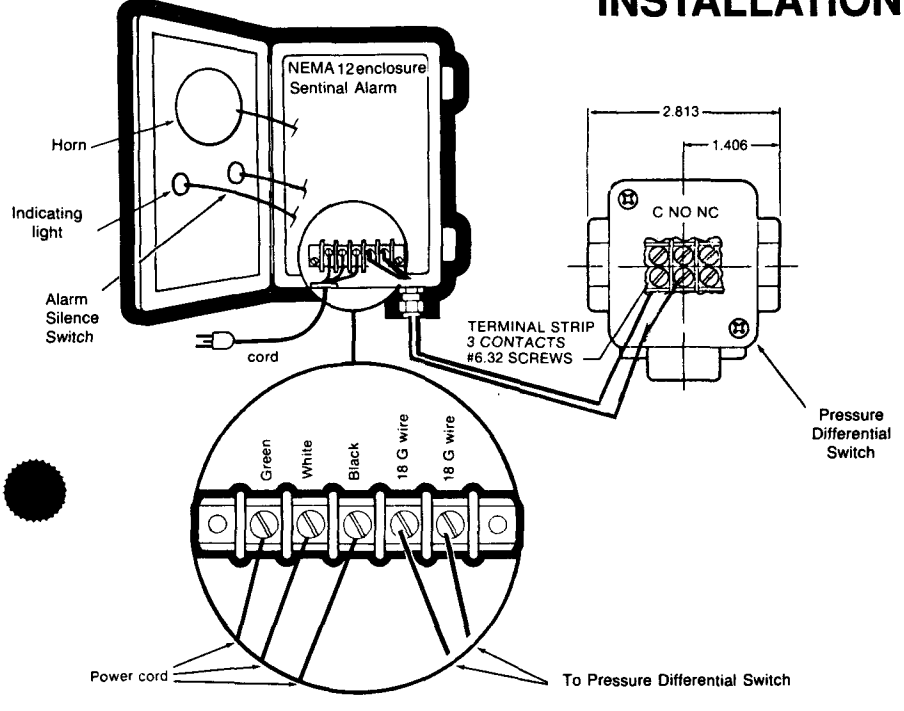

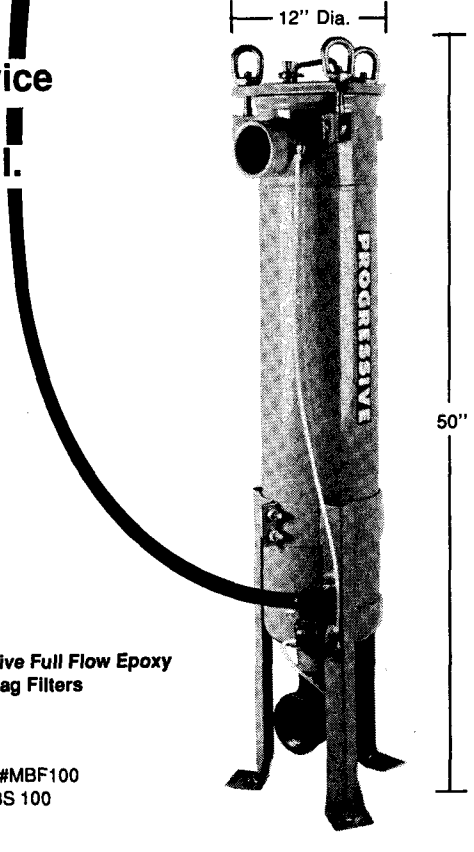

Progressive Full Flow Epoxy Coated Bag Filters

Request
Brochure #MBF100
Flyer #MBS 100

SPECIFICATIONS

SIZE	NEMA 12 enclosure with hinged (other NEMA enclosures available) cover 4" x 6" x 3-1/2" (Standard)
POWER	Input voltage 110/120V AC Single phase 50/60 Hertz 10 Milli AMPs 6' Three prong power cord provided
TEMPERATURE	Maximum 125°F ambient
INSTALLATION	Requires two conductor unshielded stranded cable (Belden Trade Nr's 8461-9153 or equivalent. Not included) The total length of wire is not to exceed 500 ft. between SENTINAL and FILTER DEVICE.
← OPTION	The Progressive Automatic Activator By Pass/Alarm Package will, at a pre-set pressure differential, go to a by pass mode or to a standby filter vessel, allowing for around the clock, unattended operation. All the above features plus: Motor - single phase gear motor; Massive gear train permanently lubricated; Captive cover bolts - stainless steel; Electrical cut off safety switch; Manual override/with optional handwheel.

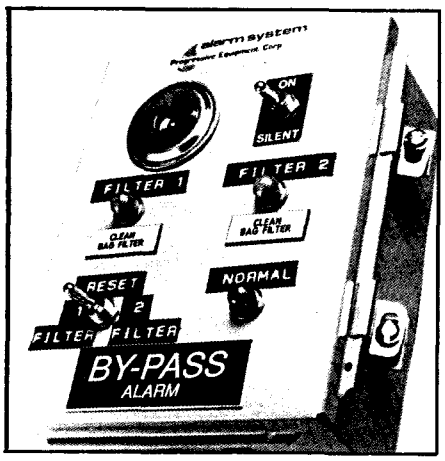

other progressive products

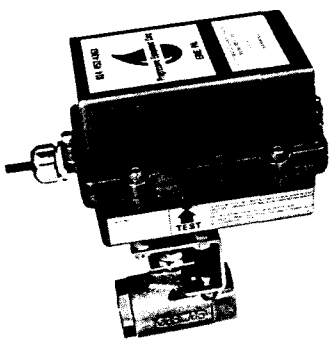

Motorized Automatic Drain
The Progressive Motorized Automatic Drain enables you to set the controls to your specific drain requirements. Simply install the drain to your vessel or settling tank to be blown down automatically with total dependability no matter how dirty or oily.

Cat. #M300

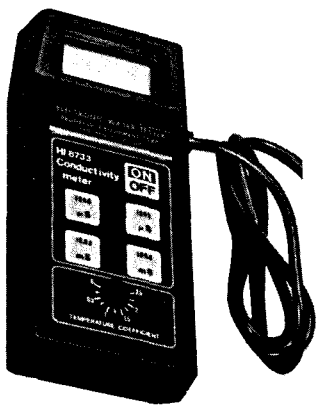

Portable Water Tester
The Progressive Electronic Portable Water Tester is the most unique and simple way to measure the conductivity of your water supply. This water tester provides an instant measure of adequate and effective blowdowns.

Cat. #WT100

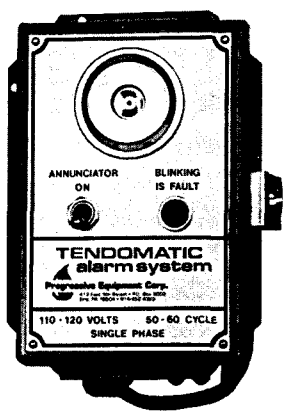

Tendomatic Remote Alarm System
The monitoring capabilities of your Progressive Water Treatment System can be extended with the Tendomatic Remote Horn Alarm.

- Works in conjunction with the standard Power Pak
- Operates on its own power supply
- Horn is synchronized with a blinking light

Cat. #TA100

Electronic Water Treater
The Progressive Electronic Water Treater is a system which eliminates and prevents further scale, corrosion and biological fouling which are the main causes for equipment failure and breakdown in your water supply.

Cat. #EWT-100

Progressive Equipment Corp.
413 East 9th Street • Erie, PA 16503
Phone 814/452-4363 • Fax 814/459-3094

Slack Diaphragm
Pressure Difference Models
Water Tight Housing (NEMA 4)
Covered Terminal Strip

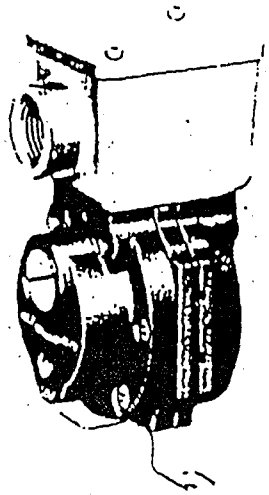

EPD1H — Single Setting

PRESSURE DIFFERENCE SWITCHES — All values given in P.S.I. (Gauge)

Max. Press. Diff. (Proof)	Working Range*	Adjustable Differential Range				Approx. Actuation Value* (Diff. Change to reset)	Model Numbers	Limit Switch Class
		Decreasing		Increasing				
		Min.	Max.	Min.	Max.			
12	.22 to 12.	.22	2.71	.51	3.0	.07 to .29	EPD1H-AA3	AA
150	3.0 to 150.	3.0	38.8	4.2	40.0	.15 to 1.2	EPD1H-AA40	AA
150	3.0 to 150.	3.0	37.5	5.5	40.0	.5 to 2.5	EPD1H-BB40	BB
Approximate shipping weight lbs.							1.5	

IN STOCK

*Working Pressure on -3 models may be extended to 90.0 P.S.I. provided Maximum Pressure Difference (proof) is not exceeded.

Wetted Material: Diaphragm — Dacron reinforced Neoprene
Fitting — Polysulfone
Internal Parts — Stainless Steel, Type 302 and 18-8

DETAIL DATA

ELECTRICAL CHARACTERISTICS: All models incorporate Underwriters' Laboratories, Inc. and CSA listed subminiature single pole double throw snap-action switching elements automatically reset by snap-action of switch. Consult table for electrical ratings.

ELECTRICAL CONNECTION: To screw terminals on covered terminal strip through ½" NPS conduit connection. Terminals are coded: Common — C, Normally Open — NO, Normally Closed — NC.

PRESSURE CONNECTIONS: ⅛" NPT internal thread.

ADJUSTMENT INSTRUCTIONS: Turn adjustment screw clockwise to increase, counter-clockwise to decrease pressureo difference (switch setting).

Note: Mounting bracket may be attached 90° right or left of position shown.

OPTIONAL MODIFICATIONS: High Amperage Switch Element (-40 only). To specify, change standard class of electrical switch to -CC. Example: EPD1H-CC40.

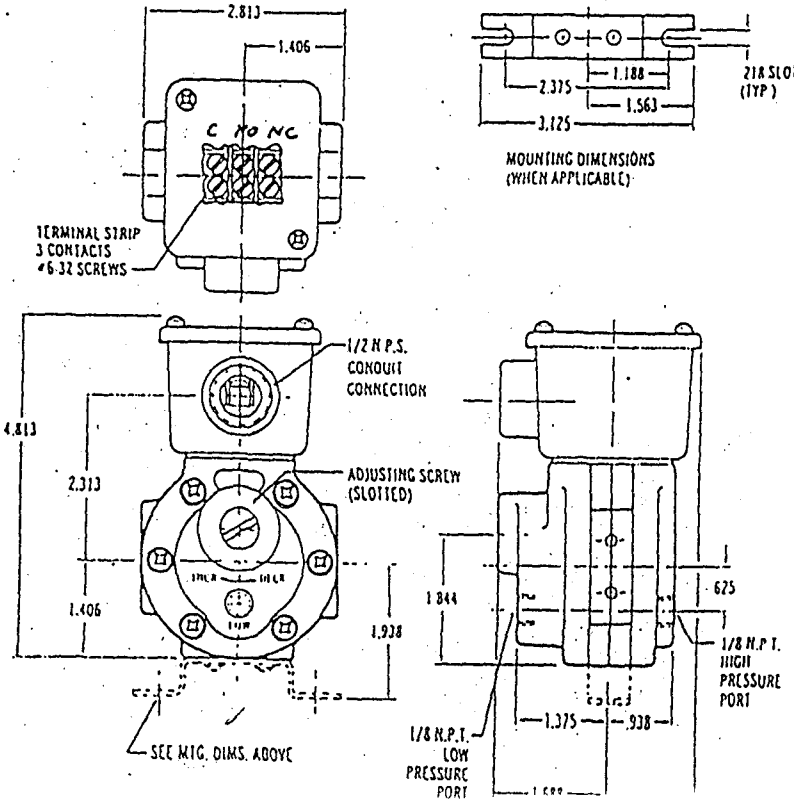

WIRE CODING
Common — Purple
Normally Closed — Blue
Normally Open — Red

ELECTRICAL RATINGS

CONTINUOUS INDUCTIVE LOAD (AMPS)

Limit Switch Class	AC 50% PF	
	125V.	250V
AA	4	4
BB	5	5
**CC	10	10

**All other operating characteristics same as -BB.

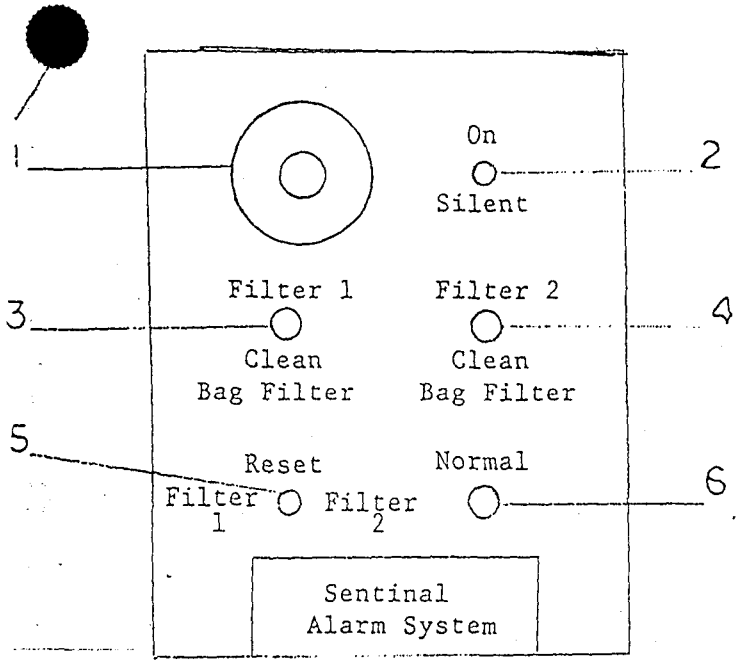

1. Annunciator (horn)
2. On - Off Switch for Annunciator
3. Indicator Light for Filter 1 Needing Service
4. Indicator Light for Filter 2 Needing Service
5. Reset Switch To Activate System After Servicing
6. Normal Light Indicating System Functioning Properly

20-22 Ga. Stranded Wire

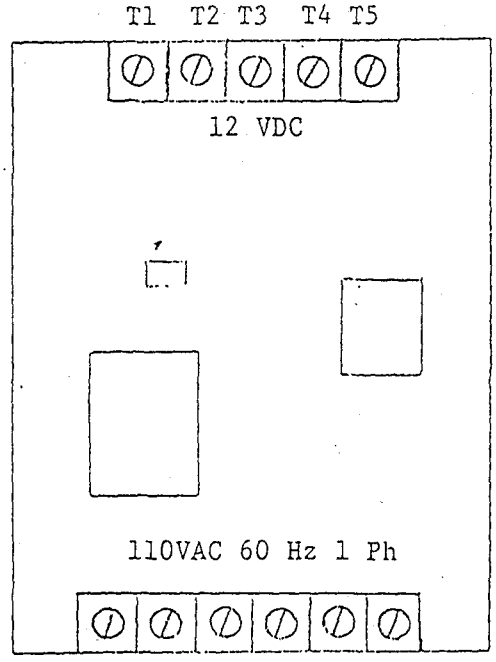

18 Ga. 3 Wire Electrical Cord

T1. Wiring Terminal To "Normally Open" Contact In Filter 1 Pressure Drop Switch.

T2. Wiring Terminal To "Normally Open" Contact In Filter 2 Pressure Drop Switch.

T3. Wiring Terminal To "Common" Contact In BOTH Pressure Drop Switches.

T4 & T5. Not Used

L1. Safety Ground (chasis ground)

L2. Common Power Feed Wire

L3. HOT Power Feed Wire

L4. Wire Terminal To White Wire In Ball Valve (actuator)

L5. Wire Terminal To Red Wire In Ball Valve (actuator)

L6. Wire Terminal To Black Wire In Ball Valve (actuator)

Amoco Performance Products, Inc.

Progressive Equipment Corp.
413 East 9th Street • P.O. Box 9002
Erie PA 16504 • 814/452-4363

VALVCON

INSTRUCTION MANUAL
for
LCR SERIES (Reversing) ELECTRIC ACTUATORS

This instruction manual contains important information regarding the installation and operation of Valvcon's LCR-Series Electric Actuators. Please read these instructions carefully and save them for future reference.

DESCRIPTION

Valvcon LCR-Series Electric Actuators are designed to provide reliable, efficient operation of 1/4 turn valves with torque requirements between 100 and 600 inch pounds. LCR-Series actuators are available in either AC models with a 25% duty cycle or in DC models with a 100% duty cycle.

PARTS LIST

1• Limit Switches
2• Cams
3• Override Shaft/Cam Shaft
4• O-ring

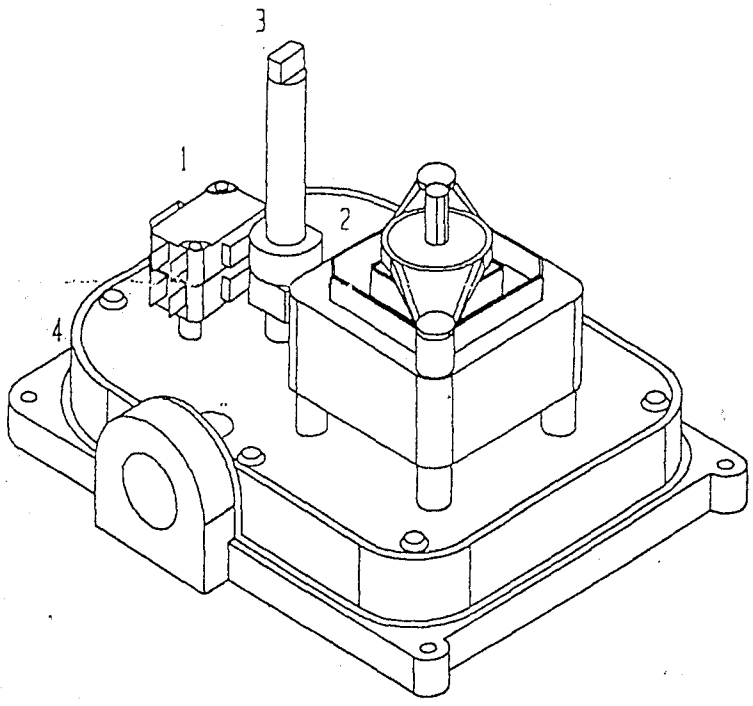

Figure 1 *Parts Identification*

INSTALLATION

CAUTION: Dangerous voltages are present inside the actuator cover unless the power supply to the actuator has been shut off or disconnected. Use extreme caution whenever working on the actuator with the cover removed.

Tools Required

- Phillips screwdriver
- Flat blade screwdriver
- 1/16 inch hex wrench

Motor Brake Option

If the actuator is to be mounted on a butterfly valve or a PVC ball valve, ensure that the actuator is equipped with a Motor Brake. This factory installed option is designated by a 'K' in the model number on the actuator nameplate.

Mounting Actuator

Verify that the output torque of the actuator is appropriate for the torque requirements of the valve. And verify that the actuator duty cycle is appropriate for the intended application.

NOTE: A 25% duty cycle means that for every operating cycle that the actuator is ON (to open or close the valve), the actuator must be OFF for a time equal to three operating cycles. For example, if the operating cycle time is 5 seconds, for every operating cycle that the actuator is ON, it must be OFF for 15 seconds. **Exceeding the actuator's rated duty cycle may cause the thermal overload switch to temporarily shut off power to the motor.**

Actuator Drive Output - Valvcon LCR Series actuators are furnished with a male drive output. with 0.375" flats. Two bolt hole circles are provided, in conformance with industry standards. (See Figure 3.)

Bracket requirements - **It is mandatory that the actuator be firmly secured to a sturdy mounting bracket.** A minimum of four bolts with lockwashers should be used to secure the actuator to the bracket. No flexibility in the bracket is allowed, and backlash, or "play", in the coupling should be minimized. The actuator output shaft must be in line (centered) with the valve shaft to avoid side-loading the shafts. (Crossed-slot couplings are more tolerant of misalignment.)
NOTE: The coupling must allow for 0.25 inches downward movement of the actuator output shaft when manual override is used. (See Figure 3.)

Temperature Limits

Low ambient temperatures - The minimum recommended ambient temperature is 30°F . With an optional heater and thermostat installed, the recommended minimum ambient temperature is -40°F.
High ambient temperatures - The maximum recommended ambient temperature is 160°F.
High media temperatures - For media temperatures between 200°F and 300°F, a shielding plate (about one inch larger than the actuator in each dimension, and at least 1/16 " thick) should be placed between the actuator and the mounting bracket. In addition, the actuator should be mounted at the 3 o'clock or 9 o'clock position relative to the pipe. For media temperatures above 300°F, a valve with an extended shaft mounting arrangement should be used.

WIRING

The identification label on each actuator specifies the voltage and current requirements for the actuator. For convenience, Figure 2 shows the standard power and control wiring connections for AC and DC actuators.

To operate a LCR electric actuator, power from the user is wired directly to the actuator's motor through two limit switches. The limit switches control the actuator's mechanical travel limits, usually 90 degrees.

VAC - To drive the actuator counterclockwise (CCW), apply power to terminals 1 and 3. To drive the actuator clockwise (CW), apply power to terminals 1 and 4. The actuator can be driven fully open (CCW) or closed (CW) by maintaining power to the motor until the actuator trips the internal limit switches . Power can also be disconnected at any point during travel to position the actuator.

VDC - DC voltage actuators require a reversing of the power polarity. To drive the actuator CW, apply power so terminal 1 is negative and terminal 4 is positive. To drive the actuator CCW apply power so terminal 1 is positive and terminal 4 is negative.

Adjustment of limit switches

Two limit switches operating off cams on the output shaft determine the exact positions where the actuator will stop at the end of each cycle. The top limit switch determines the open position. The lower limit switch determines the closed position. If adjustment of the open or closed position is required, proceed as follows:

A. Remove Actuator Cover

Remove the actuator cover by removing the screws securing the cover to the base. NOTE: 24 VAC actuators use a large capacitor that is permanently attached to the actuator cover. Be careful when removing the cover to prevent unnecessary strain on the capacitor wires.

B. Adjust the OPEN limit switch cam

1. Using a 1/16 inch hex wrench, loosen the set screw in the OPEN limit switch cam (the second limit switch up from the bottom).
2. Apply power to terminals 1 and 3 (See Figure 2) to drive the actuator to the open position (counterclockwise rotation).
3. Remove power from the actuator.
4. Rotate the cam counterclockwise just until the switch clicks out as the flat of the cam approaches the limit switch arm.
5. Re-tighten the set screw on the limit switch cam, keeping the bottom of the cam aligned with the bottom of the limit switch arm. (Be careful not to over-tighten the screw.)

C. Adjust the CLOSE limit switch cam

1. Using a 1/16 inch hex wrench, loosen the set screw in the CLOSE limit switch cam (the bottom limit switch).
2. Apply power to terminals 1 and 4 to drive the actuator to the closed position (clockwise rotation).
3. Remove power from the actuator.
4. Rotate the cam clockwise just until the switch clicks out as the flat of the cam approaches the limit switch arm.
5. Re-tighten the set screw on the limit switch cam. (Be careful not to over-tighten the screw.)

D. Replace Actuator Cover

NOTE: When reinstalling the cover, follow the normal practice of tightening the cover screws in a cross pattern to insure that the cover is pulled down flat without over-stressing a corner.

MANUAL OVERRIDE

Manual Override - To operate the actuator manually, push the override shaft down approximately 1/4", and use a wrench on the flats of the shaft to rotate the actuator. Pushing the actuator shaft down disengages the gear train and directly rotates the output shaft. Note: It is also possible to turn the override shaft without pushing it down to disengage the gear train. When this is done, the override shaft works through the gear train to rotate the actuator. The manual override shaft also provides visual indication of the actuator's position.

Optional Additional Limit Switches

Two additional limit switch may be installed in the actuator. See the LCR limit switch IOM for details.

Optional Heater and Thermostat

An optional heater and thermostat may be installed in the actuator. See the LCR heater IOM for details.

WIRING DIAGRAM

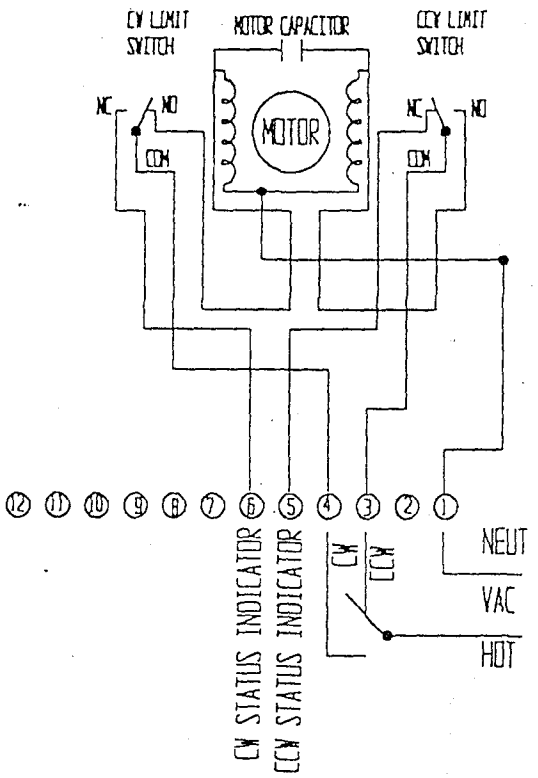

Figure 2a *VAC Wiring*

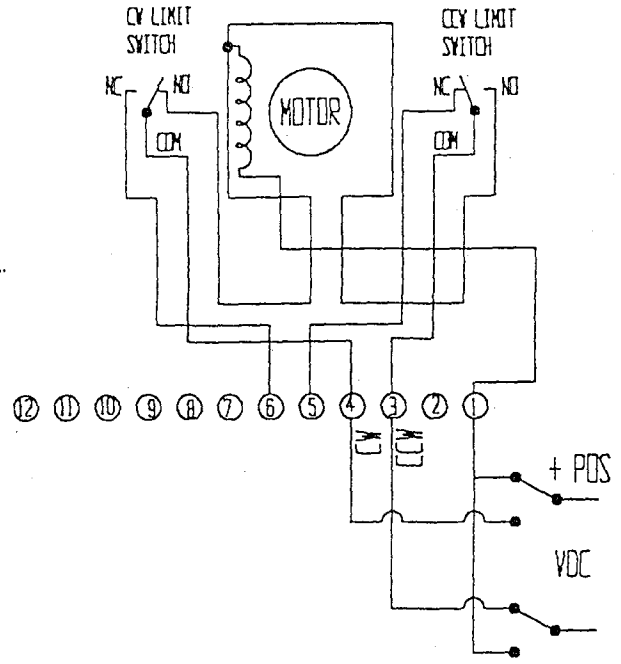

Figure 2b *VDC Wiring*

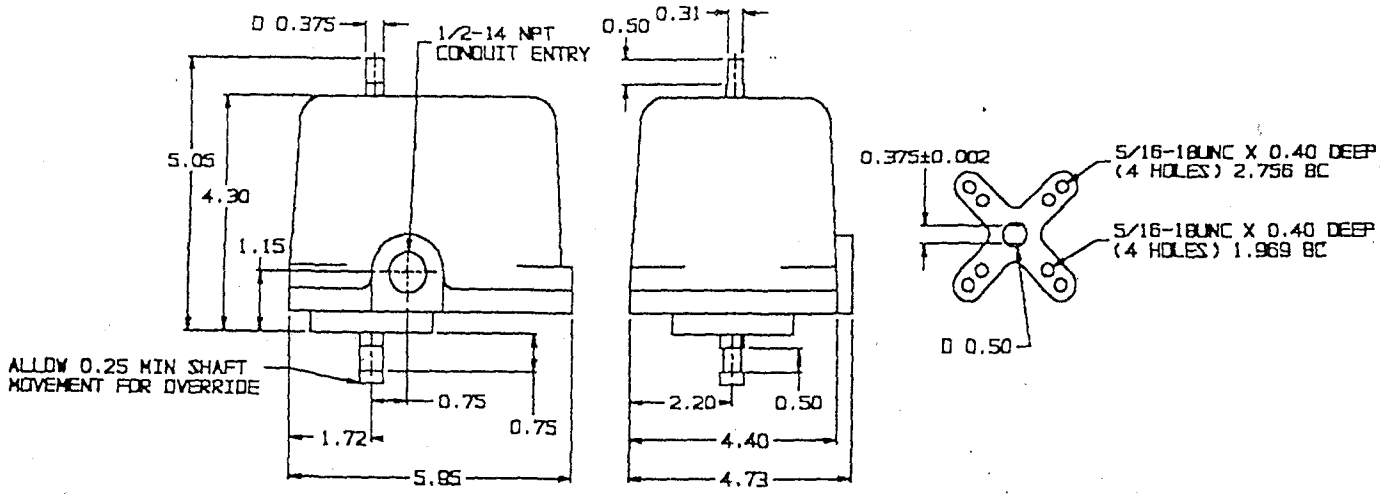

Figure 3 *Dimensions*

VALVCON Corporation
PO. Box 901, Milford, NH 03055
TELEPHONE: (603) 654-6111 - FAX: (603) 654-9050
SHIP TO: PINE VALLEY MILL BLDG., ELM ST., MILFORD, NH 03055

1994 VALVCON CORPORATION

INSTALLATION, OPERATION AND MAINTENANCE
HAYWARD ELECTRIC ACTUATORS
ALL MODELS

WITH THE HAYWARD PRE-MOUNTED AND FACTORY TESTED, ELECTRIC ACTUATOR, MOUNTING KIT AND VALVE ASSEMBLY, THE FIRST REQUIREMENT FOR PROPER INSTALLATION IS TO:

1.DISCONNECT POWER SUPPLY !

2.REMOVE THE ACTUATOR COVER.

INSIDE THE COVER YOU WILL FIND ALL OF THE APPROPRIATE WIRING DIAGRAM INFORMATION TO ALLOW YOU TO PROPERLY INSTALL EACH ACTUATOR. ON THOSE MODELS REQUIRING MORE THAN FOUR (4) COVER SCREWS, THE ADDITIONAL SCREWS ARE PACKAGED IN A POLYBAG INSIDE THE ACTUATOR.

THE INSTALLATION WIRING DOCUMENTATION HAS BEEN PLACED INSIDE THE ACTUATOR IN THE FORM OF A LABEL AFFIXED TO THE INSIDE OF THE TOP COVER OR PRINTED ON A FOLDED INSTALLATION, OPERATION SHEET.

SHOULD YOU HAVE PURCHASED AN ACTUATOR WITH MULTIPLE OPTIONS, WE MAY HAVE PLACED THE ADDITIONAL INSTALLATION OPERATION DOCUMENTATION INTO A HEAT SEALED POLYBAG PLACED WITHIN THE SHIPPING CARTON. LOOK CAREFULLY INSIDE THE CARTON TO BE SURE THAT YOU DO NOT ACCIDENTLY DISCARD THESE IMPORTANT DOCUMENTS.

COMPLIANCE OF LOCAL BUILDING/ELECTRICAL CODES:

THE ELECTRICAL CONNECTIONS TO THE ACTUATOR MUST BE PROPERLY CONNECTED CONSISTANT WITH THE INSTALLATION SCHEMATIC(S) TO THE TERMINAL STRIP(S) AFFIXED WITHIN THE ACTUATOR, OR IN CASES WHERE MULTIPLE ADDITIONAL LIMIT SWITCHES HAVE BEEN INSTALLED, TO THE WIRE LEADS WITH PROPERLY SIZED WIRE CONNECTORS AS REQUIRED BY CODE.

ALL HAYWARD ELECTRIC ACTUATORS CARRY A TWO (2) YEAR WARRANTY FOR MATERIAL DEFECTS AND WORKMANSHIP.

ACTUATOR COUPLING

DO NOT USE COUPLINGS OTHER THAN THAT SUPPLIED WITH THIS VALVE/ACTUATOR COMBINATION FOR INTERFACE BETWEEN THE ACTUATOR AND THE VALVE.

IMPORTANT TORQUE NOTICE

WHEN ATTACHING HAYWARD PLASTIC MOUNTING BRACKETS TO HAYWARD VALVES, THE FOLLOWING TORQUE SPECIFICATIONS FOR TIGHTENING OF ACTUATOR MOUNTING BRACKET BOLTS TO VALVES SHOULD BE FOLLOWED:

BALL VALVES:

BOLT SIZE	VALVE SIZE	TORQUE SPECIFICATION
1/4" THREAD	1/4" THRU 2"	25 TO 30 INCH POUNDS
3/8" THREAD	2 1/2" THRU 6"	70 TO 90 INCH POUNDS

BUTTERFLY VALVES:

3/8" THREAD	1/2" THRU 12"	100 TO 140 INCH POUNDS

HAYWARD INDUSTRIAL PRODUCTS
INSTALLATION OPERATION & MAINTENANCE OF BALL VALVES AND THREE WAY VALVES

SOCKET CONNECTION:

Socket end connections are manufactured to ASTM D2467-87A. Solvent cementing of socket end connections to pipe should be performed per ASTM specifications D2855-87. Cut pipe square. Chamfer and deburr pipe. Surfaces must be cleaned and free of dirt, moisture, oil and other foreign material. Remove assembly nuts and end connectors from valve body. Slide assembly nuts, with threads facing valve, onto pipe to which the end connector is to be cemented. Apply primer to inside socket surface of end connector. Never allow primer or cement to contact valve ball or end connector o-ring sealing surfaces, as leaking may result. Use a scrubbing motion. Repeat applications may be necessary to soften the surface of the socket. Next, liberally apply primer to the male end of the pipe to the length of the socket depth. Again apply to the socket, without delay apply cement to the pipe while the surface is still wet with primer. Next apply cement lightly, but uniformly to the inside of the socket. Apply a second coat of cement to the pipe, and assemble the end connector to the pipe, rotating the end connector 1/4 turn in one direction as it is slipped to full depth on to the pipe. The end connector should be held in position for approx. 30 seconds to allow the connection to "set". After assembly wipe off excess cement. Full set time is a minimum of 30 minutes at 60 to 100 F. Full cure time should be based on the chart below.

JOINT CURE SCHEDULE:

The cure schedules are suggested as guides. They are based on laboratory test data, and should not be taken to be the recommendations of all cement manufacturers. Individual manufacturer's recommendations for their particular cement should be followed.

Temperature Range During Cure Period(B) °F(°C)	Test Pressures for Pipe Sizes 1/2 to 1-1/4 In. Up to 180 PSI (1240 kPa)	Test Pressures for Pipe Sizes 1/2 to 1-1/4 In. Above 180 to 370 PSI (1240 to 2550 kPa)	Test Pressures for Pipe Sizes 1-1/2 to 3 In. Up to 180 PSI (1240 kPa)	Test Pressures for Pipe Sizes 1-1/2 to 3 In. Above 180 to 315 PSI 1240) to 2170 kPa)	Test Pressures for Pipe Sizes 4 to 5 In. Up to 180 PSI (1240 kPa)	Test Pressures for Pipe Sizes 4 to 5 In. Above 180 to 315 PSI (1240 to 2170 kPa)	Test Pressures for Pipe Sizes 6 to 8 In. Up to 180 PSI (1240 kPa)	Test Pressures for Pipe Sizes 6 to 8 In. Above 180 to 315 PSI (1240 to 2170 kPa)
60 to 100 (15 to 40)	1 h	6 h	3 h	12 h	6 h	18 h	8 h	24 h
40 to 60 (5 to 15)	2 h	12 h	4 h	24 h	12 h	36 h	16 h	48 h
20 to 40 (-7 to 5)	6 h	36 h	12 h	72 h	36 h A	4 days A	3 days A	9 days A
10 to 20) (-15 to 7)	8 h	48 h	16 h	96 h	72 h A	8 days A	4 days A	12 days A
Colder than 10 (-15)	Extreme care should be exercised on all joints made where pipe, fittings or cement is below 10°F.							

A: It is important to note that at temperatures colder than 20°F on sizes that exceed 3 in., test results indicate that many variables exist in the actual cure rate of the joint. The data expressed in these categories represent only estimated averages. In some cases, cure will be achieved in less time, but isolated test results indicate that even longer periods of cure may be required.
B: These cure schedules are based on laboratory test data obtained on Net Fit Joints (NET FIT=in a dry fit the pipe bottoms snugly in the fitting socket without meeting interference).

THREADED CONNECTION:

Threaded end connections are manufactured to ASTM specifications D2464-88. F437-88 and ANSI B2.1. Wrap threads of pipe with Teflon tape of 3 to 3-1/2 mil thickness. The tape should be wrapped in a clockwise direction starting at the first or second full thread. Overlap each wrap by, 1/2 the width of the tape. The wrap should be applied with sufficient tension to allow the threads of a single wrapped area to show through without cutting the tape. The wrap should continue for the full effective length of the thread. Pipe sizes 2" and greater will not benefit with more than a second wrap, due to the greater thread depth. To provide a leak proof joint, the pipe should be threaded into the end connection "hand tight". Using a strap wrench only. (Never use a stillson type wrench) tighten the joint an additional 1/2 to 1-1/2 turns past hand tight. Tightening beyond this point may induce excessive stress that could cause failure.

FLANGED CONNECTION:

Flange bolts should be tight enough to slightly compress the gasket and make a good seal, without distorting or putting excessive stress on the flanges. Suitable washers should be used between the bolt head and flange and the nut and flange. Bolts should be tightened in alternating sequence.

RECOMMENDED FLANGE BOLT TORQUE

FLANGE SIZE	BOLT DIA.	TORQUE FT. LBS.	FLANGE SIZE	BOLT DIA.	TORQUE FT. LBS.
1/2	1/2	10-15	2	5/8	15-25
3/4	1/2	10-15	2-1/2	5/8	20-25
1	1/2	10-15	3	5/8	20-25
1-1/4	1/2	10-15	4	5/8	20-25
1-1/2	1/2	10-15	5	3/4	30-40

NOTE: USE WELL LUBRICATED METAL BOLTS AND NUTS. USE SOFT RUBBER GASKETS.

ADJUSTMENT:

EXTREME CAUTION MUST BE TAKEN WHEN WORKING ON THIS VALVE.
THE PIPING SYSTEM MUST BE DEPRESSURIZED AND DRAINED. PROPER CARE MUST BE TAKEN. CONSULT M.S.D.S. (MATERIAL SAFETY DATA SHEETS) INFORMATION REGARDING YOUR SPECIFIC APPLICATION.

Rotation of the assembly nut clockwise will move the end connector toward the seats. This movement will tend to make a leaking valve stop leaking. The assembly nut adjustment must be made carefully as valve operating torque increases with increasing assembly nut torque. If the valve still leaks after adjustment, on 1/2" through 2" valves the seats can be reversed to provide a new seal surface.

REPAIR:

Follow the adjustment sequence and information above, but rotating the assembly nut completely in the counter clockwise direction and remove it from valve body. Remove the end connector. The o-rings and seals are now accessible for replacement using a "seal" repair kit. Carefully remove the o-rings from their respective locations taking care not to scratch their sealing surfaces. Use a non-petroleum base lubricant to lubricate the o-rings, and re-assemble the valve.

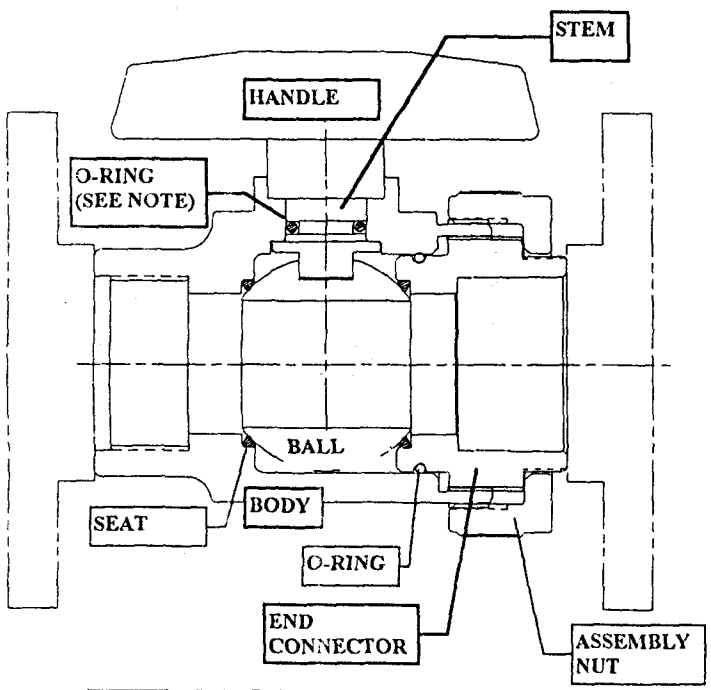

MANUAL VALVE ILLUSTRATED

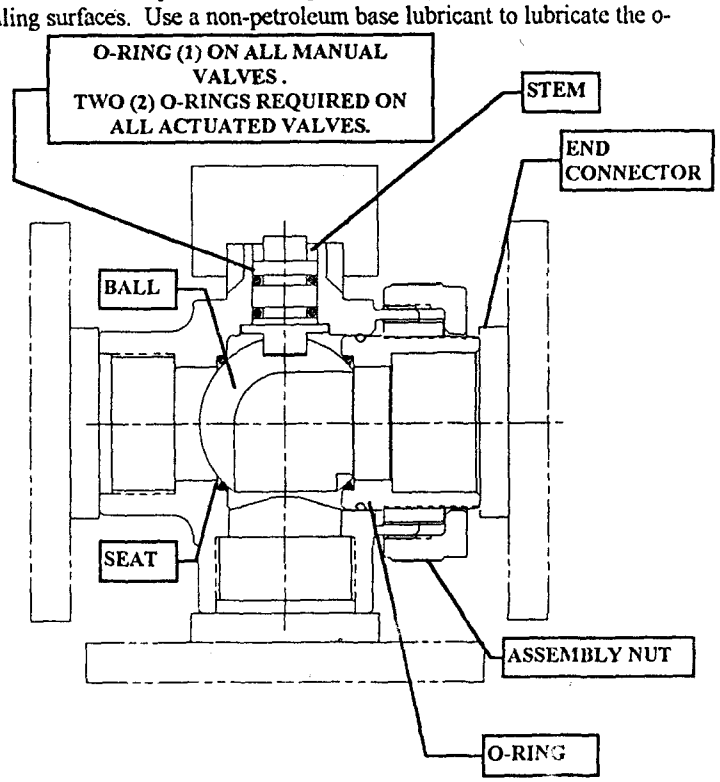

ACTUATED VALVE ILLUSTRATED

OPERATING PRESSURE TEMPERATURE

TRUE UNION, TRUE CHECK, & SINGLE ENTRY ONLY

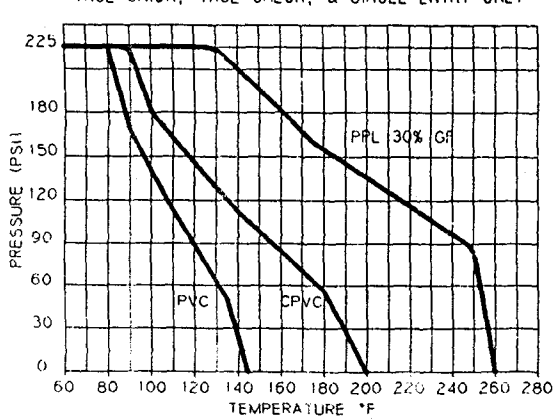

Recommended valve stem torque to rotate the ball 360° when valve is reassembled.

VALVE SIZE	TORQUE IN*LB
1/2"	30
3/4"	40
1"	50
1 1/4"	60
1 1/2"	60
2"	80
3"	18(
4" & 6"	22(

HAYWARD INDUSTRIAL PRODUCTS, INC.

900 FAIRMOUNT AVENUE
ELIZABETH, NEW JERSEY 07207

INSTRUCTION SHEET

HAYWARD PLASTIC VALVES

1. The maximum pressure at which this valve can be used for a particular temperature is shown on the chart below. Note that this varies for different materials.

OPERATING PRESSURES & TEMPERATURES (NON-SHOCK)

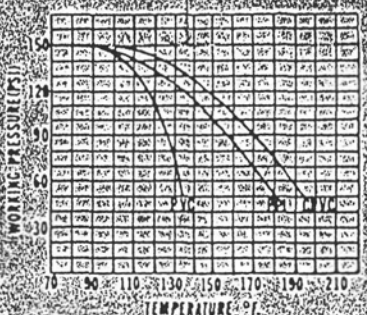

PRESSURE TEMPERATURE RELATIONSHIP OF HAYWARD PLASTIC BALL VALVE MATERIALS. WORKING PRESSURE FIGURES ARE THE MAXIMUM RECOMMENDED FOR THE INDICATED TEMPERATURES.

2. In the case of single entry valves, the assembly nuts are factory set and should not be loosened. They can be tightened slightly to compensate for minor seat wear.

   In the case of True Union valves, if the union nuts must be removed for installation or for disassembly, be sure to tighten them securely.

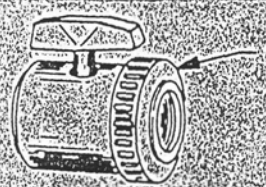

SINGLE ENTRY

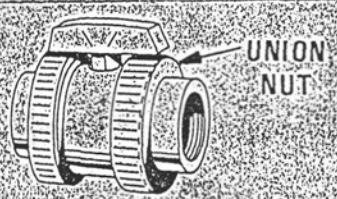

TRUE UNION

3. When installing this valve, hand tightening is sufficient in most cases. When necessary, a strap wrench may be used.

   CAUTION: Do not use stillson or chain type wrenches as they may damage or distort the body.

4. If metal pipe is screwed into the valve, be careful not to over tighten. Otherwise, the tapered metal threads can act as a wedge and crack the plastic parts.

5. The Hayward Manufacturing Company publishes a chart (CRT-800) listing the chemical resistance of PVC, CPVC, and Polypropylene to a number of common industrial chemicals. This chart can be obtained from your local Hayward distributor. If there are any questions consult your local Hayward representative.

6. These valves are equipped with EPDM "O" ring seals. This is not the standard Viton material which is normally used on Hayward plastic valves. Viton has superior chemical resistance to EPDM and there are many cases where EPDM should not be used. If you have any questions, please check with your local Hayward Manufacturer's Representative or the Factory.

PA-IS-1100E

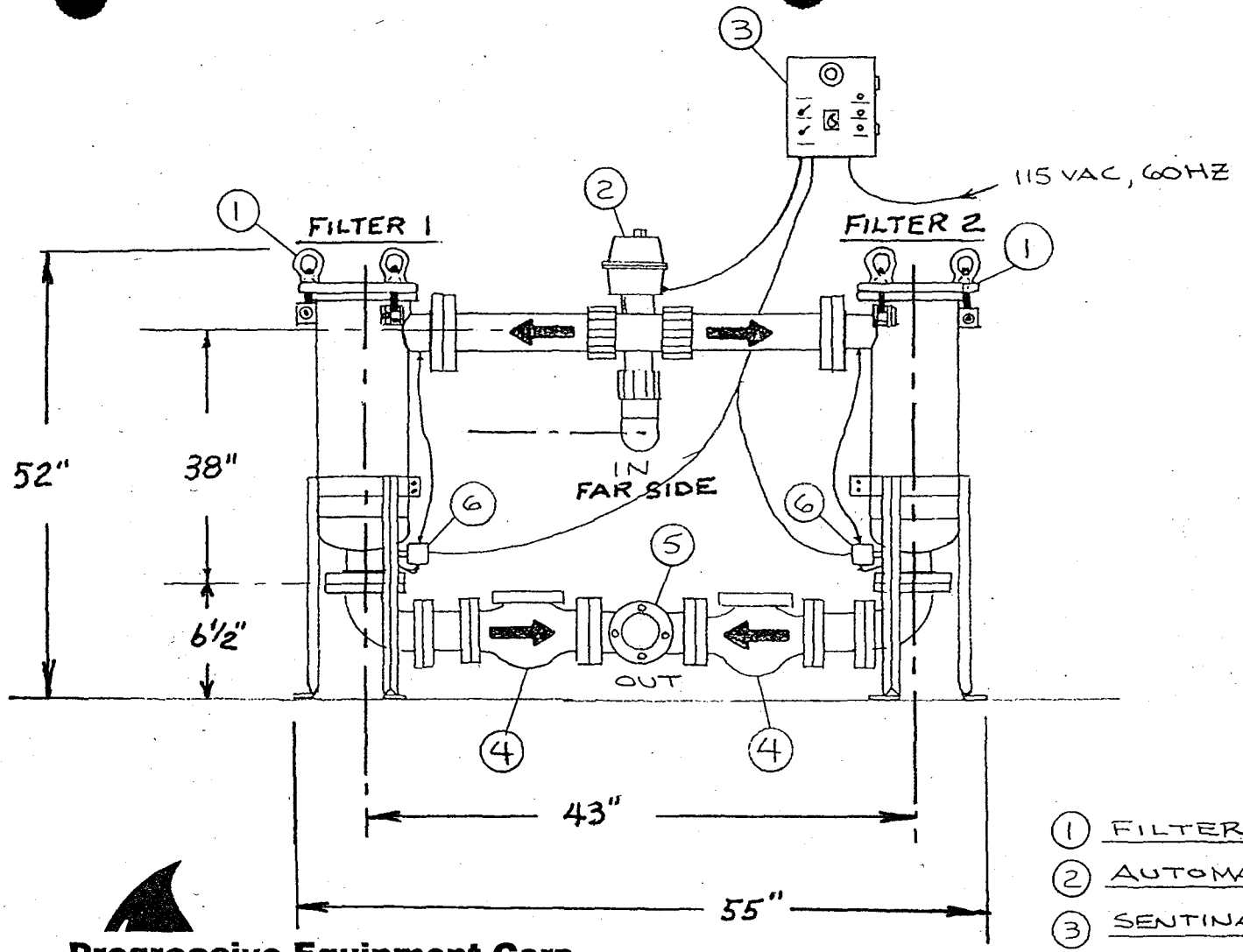

1. FILTER VESSELS
2. AUTOMATIC 3-WAY VALVE
3. SENTINAL DUPLEX ALARM
4. CHECK VALVES
5. TEE
6. DIFFERENTIAL SWITCH

Progressive Equipment Corp.
413 East 9th Street
Erie, PA 16503 • 814/452-4363
Fax (814) 459-3094

#1 IN ELECTRONIC WATER TREATMENT

2" DUAL FILTER SYSTEM WITH PF180-2 SS BAG FILTERS

DATE 1/14/89	DWG. DFS1891
DR. AZ	

Electrically Actuated Ball Valve

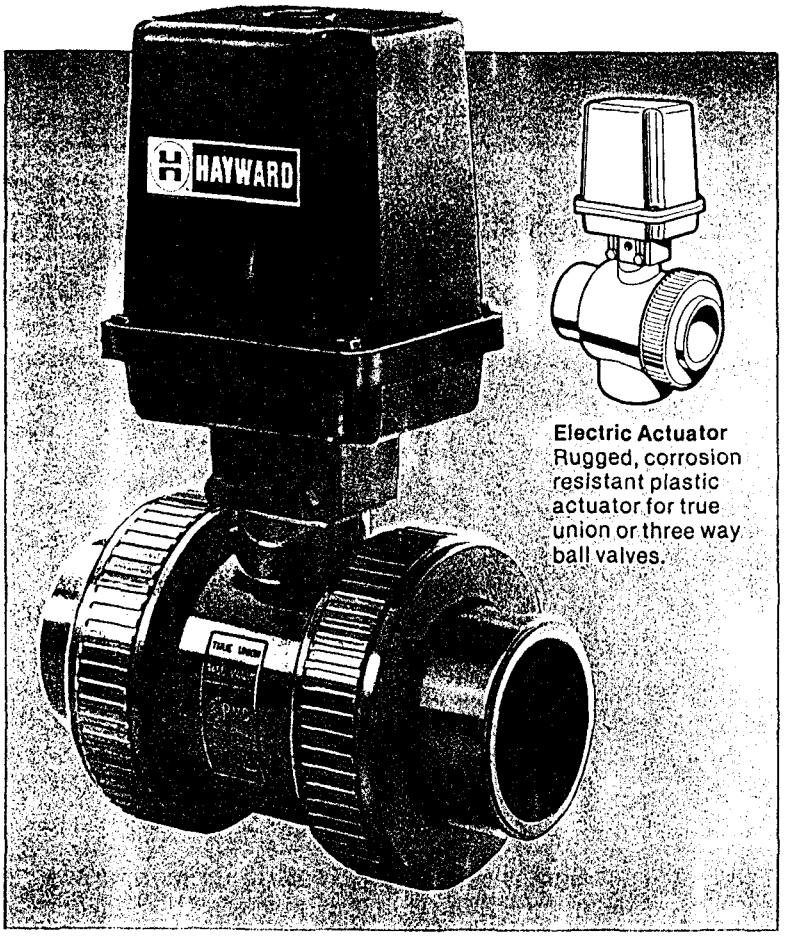

Electric Actuator
Rugged, corrosion resistant plastic actuator for true union or three way ball valves.

Hayward Modular Series electrically actuated ball valves use an all-plastic electric actuator designed for severely corrosive service. For use with Hayward's 1/2" - 2" Safe-Block True Union or Full-Flow Three-Way Ball Valves, the modular design allows mounting, installation and servicing to be done in minutes, saving time and money.

The U.L. approved unidirectional heavy duty gear motor is complete with a magnetic brake. The actuator is prewired for auxiliary switches or lights. The unique cam design allows for quick changeovers from 90° rotation to 180° rotation for two-way or three-way valve operation. The all-plastic Nema IV enclosure insures watertight sealing and tough corrosive resistance.

Other features include:

- Fully balanced valve and actuator.
- Modular mounting for any 1/2" - 2" true union or three-way Hayward valve.
- U.L. approved motor with automatic reset thermal overload protector.
- 120 V., 60 hz., max. amp 3.0 amps.
- Fast 2-1/2 second rotation (90°).
- Heavy-duty design for long life industrial use.

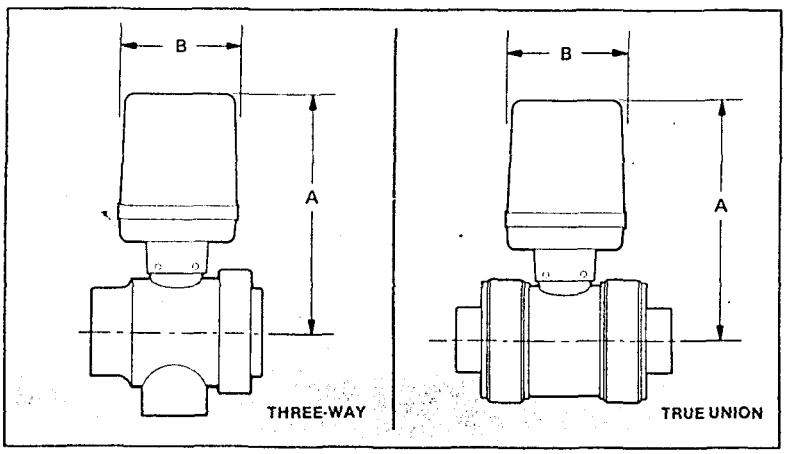

Hayward Modular Series electrically actuated ball valves can also be specified with a standard Nema IV, or Nema VII rated reversing type actuator, for use with 1/2" - 6" Safe-Block True Union or Full-Flow Three-Way Ball Valves.

These actuators are complete with a manual override in the Nema IV and Nema VII enclosures. Two limit switches and cams provide easy adjustment and positioning.

Other features include:

- Modular mounting for any 1/2" - 6" true union or three-way Hayward valve.
- 120 V., 50/60 hz., single phase.
- 25 percent duty cycle. 5 second rotation (90°).

THREE-WAY DIMENSIONS— Dimensions are in inches.

Size	A	B
1/4 - 1/2	8-1/4	4-7/8
3/4	8-7/16	4-7/8
1	8-11/16	4-7/8
1-1/2	9-1/8	4-7/8
2	9-9/16	4-7/8
3	12	6-1/2
4	12-15/16	6-1/2
6	12-15/16	6-1/2

TRUE UNION DIMENSIONS— Dimensions are in inches.

Size	A	B
1/4 - 1/2	8-1/4	4-7/8
3/4	8-7/16	4-7/8
1	8-11/16	4-7/8
1-1/4	9	4-7/8
1-1/2	9-1/8	4-7/8
2	9-9/16	4-7/8
3	12-3/8	6-1/2
4	13-1/4	6-1/2
6	13-1/4	6-1/2

HAYWARD INDUSTRIAL PLASTICS

INSTALLATION OPERATION & MAINTENANCE
OF TRUE UNION BALL VALVES

SOCKET CONNECTION:

Socket end connections are manufactured to ASTM D2467-87A specifications. Solvent cementing of socket end connections to pipe should be performed per ASTM specifications D2855-87. Cut pipe square. Chamfer and deburr pipe. Surfaces must be cleaned and free of dirt, moisture, oil and other foreign material. Remove assembly nuts and end connectors from valve body. Slide assembly nut, with threads facing valve, onto pipe to which the end connector is to be cemented. Apply primer to inside socket surface of end connector. Never allow primer or cement to contact valve ball or end connector o-ring sealing surfaces, as leaking may result. Use a scrubbing motion. Repeat applications may be necessary to soften the surface of the socket. Next, liberally apply primer to the male end of the pipe to the length of the socket depth. Again apply primer to the socket, without delay apply cement to the pipe while the surface is still wet with primer. Next apply cement lightly, but uniformly to the inside of the socket. Apply a second coat of cement to the pipe, and assemble the end connector to the pipe, rotating the end connector 1/4 turn in one direction as it is slipped to full depth on to the pipe. The end connector should be held in position for approx. 30 seconds to allow the connection to "set". After assembly wipe off excess cement. Full set time is a minimum of 30 minutes at 60 to 100 F. Full cure time should be based on the chart below.

JOINT CURE SCHEDULE

The cure shedules are suggested as guides. They are based on laboratory test data, and should not be taken to be the recommendations of all cement manufacturers. Individual manufacturer's recommendations for their particular cement should be followed.

Temperature Range During Cure Period(B) °F(°C)	Test Pressures for Pipe Sizes 1/2 to 1 1/4 in.		Test Pressures for Pipe Sizes 1 1/2 to 3 in.		Test Pressures for Pipe Sizes 3 1/2 to 5 in.		Test Pressures for Pipe Sizes 6 to 8 in.	
	Up to 180 psi(1240 kPa)	Above 180 to 370 psi(1240 to 2550 kPa)	Up to 180 psi(1240 kPa)	Above 180 to 315 psi(1240 to 2170 kPa)	Up to 180 psi(1240 kPa)	Above 180 to 315 psi(1240 to 2170 kPa)	Up to 180 psi(1240 kPa)	Above 180 to 315 psi(1240 to 2170 kPa)
60 to 100 (15 to 40)	1 h	6 h	2 h	12 h	6 h	18 h	8 h	24 h
40 to 60 (5 to 15)	2 h	12 h	4 h	24 h	12 h	36 h	16 h	48 h
20 to 40 (-7 to 5)	6 h	36 h	12 h	72 h	36 h A	4 days A	3 days A	9 days A
10 to 20 (-15 to -7)	8 h	48 h	16 h	96 h	72 h A	8 days A	4 days A	12 days A
Colder than 10 (-15)	Extreme care should be exercised on all joints made where pipe, fittings or cement is below 10°F.							

A- It is important to note that at temperatures colder then 20°F on sizes that exceed 3 in., test results indicate that many variables exist in the actual cure rate of the joint. The data expressed in these categories represent only estimated averages. In some cases, cure will be achieved in less time, but isolated test results indicate that even longer periods of cure may be required.

B- These cure schedules are based on laboratory test data obtained on Net Fit Joints (NET FIT=In a dry fit the pipe bottoms snugly in the fitting socket without meeting interference). The relative humidity in these tests was 50 % or less. Higher relative humidity may require longer cure periods.

THREADED CONNECTION:

Threaded end connections are manufactured to ASTM specifications D2464-88, F437-88, and ANSI B2.1. Wrap threads of pipe with teflon tape of 3 to 3-1/2 mil thickness. The tape should be wrapped in a clockwise direction starting at the first or second full thread. Overlap each wrap, by 1/2 the width of the tape. The wrap should be applied with sufficient tension to allow the threads of a single wrapped area to show through without cutting the tape. The wrap should continue for the full effective length of the thread. Pipe sizes 2" and greater will not benefit with more than a second wrap, due to the greater thread depth. To provide a leak proof joint, the pipe should be threaded into the end connection "hand tight". Using a strap wrench only, (never use a stilson type wrench) tighten the joint an additional 1/2 to 1-1/2 turns past hand tight. Tightening beyond this point may induce excessive stress that could cause failure.

FLANGED CONNECTION:

Flange bolts should be tight enough to slightly compress the gasket and make a good seal, without distorting or putting excessive stress on the flanges. Suitable washers should be used between the bolt head and flange and the nut and flange. Bolts should be tightened in alternating sequence.

RECOMMENDED FLANGE BOLT TORQUES

FLANGE SIZE	BOLT DIA.	TORQUE FT.LBS.	FLANGE SIZE	BOLT DIA.	TORQUE FT.LBS.
1/2	1/2	10-15	2	5/8	15-25
3/4	1/2	10-15	2-1/2	5/8	20-25
1	1/2	10-15	3	5/8	20-25
1-1/4	1/2	10-15	4	5/8	20-25
1-1/2	1/2	10-15	6	3/4	30-40

JUSTMENT:

essure applied to the teflon seals against the ball is controlled by the threaded seal retainer (carrier) at the end of the valve marked ". This retainer is threaded into the valve body and can be tightened to compensate for seal wear.

XTREME CAUTION MUST BE TAKEN WHEN WORKING ON THIS VALVE. THE PIPING SYSTEM MUST BE)EPRESSURIZED AND DRAINED. PROPER CARE MUST BE TAKEN. CONSULT M.S.D.S. (MATERIAL SAFETY)ATA SHEETS) INFORMATION REGARDING YOUR SPECIFIC APPLICATION.

emove the assembly nut and end connector from the "adjust" end of the body, or the complete valve body from the piping system.

e front face of the seal retainer indicates which direction of rotation tightens or loosens the seal retainer, with the word "tighten" and a directional row, and the word "loosen" and a directional arrow. Direction of rotation may vary depending on date of manufacture. The handles manufactured with ised pads on the top surface, can be used as a wrench for adjusting the seal retainer. Remove the handle from the valve stem and insert the raised ds into the recessed slots of the seal retainer. Proper pressure of the seal to ball can be checked by tightening the seal retainer and measuring the nount of torque required to rotate the valve stem 360°. Torque requirements are approximately as follows:

VALVE SIZE IN.	MAX. TORQUE IN.LBS.	VALVE SIZE IN.	MAX. TORQUE IN.LBS.	VALVE SIZE IN.	MAX. TORQUE IN.LBS.
1/2	30	1-1/4	60	2-1/2	140
3/4	40	1-1/2	60	3	140
1	50	2	80	4	170

EPAIR:

llow the adjustment sequence and information above, but rotating the seal retainer completely in the "loosen" direction and remove it from valve dy. Rotate the ball to the "closed" position and remove from valve body. Push the valve stem from outside the body inward to the center of the lve body. The o-rings and teflon seals are now acceptable for replacement using a "seat and seal" repair kit. (NOTE: For emergency purposes the teflon als are reversible on valves with "molded labeling", not mylar labeled valves). Carefully remove the o-rings from their respective locations taking care t to scratch their sealing surfaces. Use a non-petroleum base lubricant to lubricate the o-rings, and re-assemble the valve.

SHOW EXPLODED VIEW ASSY NUT HAND TIGHT W/STRAP WRENCH

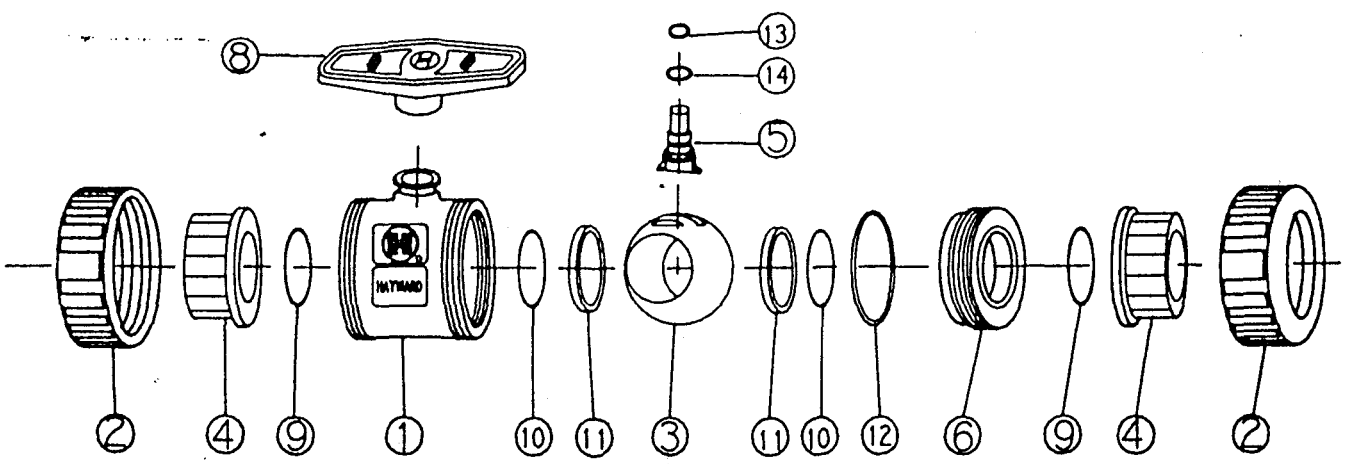

ITEM	DESCRIPTION	ITEM	DESCRIPTION
1	BODY	9	"O"-RING
2	ASSEMBLY NUT	10	"O"-RING *
3	BALL	11	TEFLON SEAL
4	END CONNECTOR	12	"O"-RING
5	STEM	13	"O"-RING
6	SEAL RETAINER	14	"O"-RING *
8	HANDLE		*MAY NOT EXIST ON ALL MODELS

OPERATING PRESSURES & TEMPERATURES

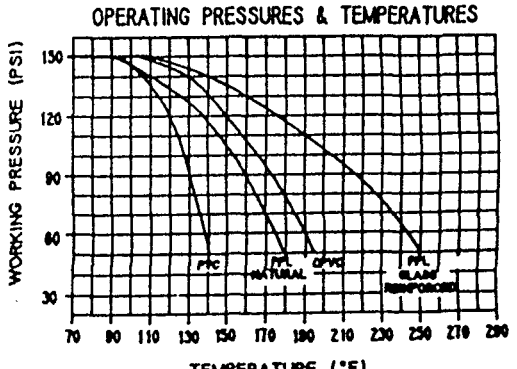

Pressure - Temperature relationship of HAYWARD Plastic Ball Valve materials. Working pressure (non-shock) figures are the maximum recommended for the indicated temperatures.

TBIS
Rev. A
3/29/90

Superior Production Welding, Inc.
FILTER DIVISION
2338 BROOKLYN ROAD
JACKSON, MICHIGAN 49203

Date: March 9, 1995
To: Mr. Dick Michael
Progressive Equipment
413 E. 9th Street
Erie, PA 16503
Re: Your PO# 3729 for two (2) SF-08-01-30-31-304 Filter Vessels
Serial #'s S-0802A and S-0802-B OUR PF1855

Please be advised that the above mentioned vessels were designed, built, and tested in accordance with 1992 ASME Boiler Code, Section VIII, Division 1 - 1993 Addenda.

Very truly yours,

Jerome P. Ainsworth
Operations Manager
Superior Filters, Division of
Superior Production Welding, Inc.

APPENDIX I
INFLUENT AND EFFLUENT FLOWMETERS

Manufacturer/ Supplier:	Omega Engineering, Inc. One Omega Drive PO Box 4047 Stamford, CT 06907-0047 (203) 359-1660 Fax: (203) 359-7700
Model:	FTB611OPT
S/N:	94614192 (Influent) 94614203 (Effluent)

FTB6100 and FTB6200 Series Industrial Positive Displacement Cold Water Meters

Model FTB6110-PT
S/N 94614192
94614203

OMEGA®
An OMEGA Technologies Company

Operator's Manual
M1096/0992

WARRANTY

OMEGA warrants this unit to be free of defects in materials and workmanship and to give satisfactory service for a period of **13 months** from date of purchase. OMEGA Warranty adds an additional one (1) month grace period to the normal **one (1) year product warranty** to cover handling and shipping time. This ensures that our customers receive maximum coverage on each product. If the unit should malfunction, it must be returned to the factory for evaluation. Our Customer Service Department will issue an Authorized Return (AR) number immediately upon phone or written request. Upon examination by OMEGA, if the unit is found to be defective it will be repaired or replaced at no charge. However, this WARRANTY is VOID if the unit shows evidence of having been tampered with or shows evidence of being damaged as a result of excessive corrosion; or current, heat, moisture or vibration; improper specification; misapplication; misuse or other operating conditions outside of OMEGA's control. Components which wear or which are damaged by misuse are not warranted. These include contact points, fuses, and triacs.

We are glad to offer suggestions on the use of our various products. Nevertheless OMEGA only warrants that the parts manufactured by it will be as specified and free of defects.

OMEGA MAKES NO OTHER WARRANTIES OR REPRESENTATIONS OF ANY KIND WHATSOEVER, EXPRESSED OR IMPLIED, EXCEPT THAT OF TITLE AND ALL IMPLIED WARRANTIES INCLUDING ANY WARRANTY OF MERCHANTABILITY AND FITNESS FOR A PARTICULAR PURPOSE ARE HEREBY DISCLAIMED.

LIMITATION OF LIABILITY: The remedies of buyer set forth herein are exclusive and the total liability of OMEGA with respect to this order, whether based on contract, warranty, negligence, indemnification, strict liability or otherwise, shall not exceed the purchase price of the component upon which liability is based. In no event shall OMEGA be liable for consequential, incidental or special damages.

Every precaution for accuracy has been taken in the preparation of this manual, however, OMEGA ENGINEERING, INC. neither assumes responsibility for any omissions or errors that may appear nor assumes liability for any damages that result from the use of the products in accordance with the information contained in the manual.

RETURN REQUESTS / INQUIRIES

Direct all warranty and repair requests/inquiries to the OMEGA ENGINEERING Customer Service Department. Call toll free in the USA and Canada: 1-800-622-2378, FAX: 203-359-7811; International: 203-359-1660, FAX: 203-359-7807.

BEFORE RETURNING ANY PRODUCT(S) TO OMEGA, YOU MUST OBTAIN AN AUTHORIZED RETURN (AR) NUMBER FROM OUR CUSTOMER SERVICE DEPARTMENT (IN ORDER TO AVOID PROCESSING DELAYS). The assigned AR number should then be marked on the outside of the return package and on any correspondence.

FOR WARRANTY RETURNS, please have the following information available BEFORE contacting OMEGA:

1. P.O. number under which the product was PURCHASED,
2. Model and serial number of the product under warranty, and
3. Repair instructions and/or specific problems you are having with the product.

FOR NON-WARRANTY REPAIRS OR CALIBRATION, consult OMEGA for current repair/calibration charges. Have the following information available BEFORE contacting OMEGA:

1. Your P.O. number to cover the COST of the repair/calibration,
2. Model and serial number of product,
3. Repair instructions and/or specific problems you are having with the product.

OMEGA's policy is to make running changes, not model changes, whenever an improvement is possible. That way our customers get the latest in technology and engineering.

OMEGA is a registered trademark of OMEGA ENGINEERING, INC.

©Copyright 1992 OMEGA ENGINEERING, INC. All rights reserved including illustrations. Nothing in this manual may be reproduced in any manner, either wholly or in part for any purpose whatsoever without written permission from OMEGA ENGINEERING, INC.

Printed in U.S.A.

TABLE OF CONTENTS
FTB6100/6200
COLD WATER METER
1/2" THROUGH 2 " POSITIVE DISPLACEMENT

PAGE

SECTION 1 INTRODUCTION..... 1

SECTION 2 AVAILABLE MODELS..... 1

SECTION 3 INSTALLATION..... 2

3.1 Unpacking..... 2
3.2 Installation 2

SECTION 4 START-UP PROCEDURE..... 2

SECTION 5 SPECIFICATIONS..... 3

SECTION 6 OPTIONS..... 3

6.1 -PT Option..... 4
6.2 -PR Option..... 4

SECTION 7 DIMENSIONAL DRAWINGS..... 5

SECTION I INTRODUCTION

The OMEGA FTB6100/6200 meter is a volumetric type operating on the oscillating piston principle. This utilizes a piston which the water rotates in a working chamber, with each piston revolution being equivalent to a known volume of water. The highly accurate FTB6100/6200 is specifically designed for cold water applications. It features giant fully rotatable 3", magnetically-driven, permanently hermetically sealed and nitrogen-filled register for extra long life and assured accuracy. Its 1/4" thick glass face is tempered to resist breakage, scratching, and abrasion. A flow detector located on the top of the center spindle, provides visual proof of plumbing leaks.

The FTB6100/6200 has a self-lubricating positive displacement design. The precision-machined internal parts are manufactured from graphite impregnated thermoplastic in combination with a longer life, more trouble-free service. Its internal 40 mesh strainer minimizes stoppages due to foreign matter in the pipe. Because of its unique oscillating piston design and low oscillation rate, wear is reduced to a minimum.

The piston movement is transferred by appropriate reduction gearing and a magnetic drive to a straight reading sealed register calibrated in U.S. Gallons, $ft.^3$ (cubic feet) or m^3 (cubic meters).

WARNING

THESE WATER FLOWMETERS HAVE PLASTIC INTERNAL PARTS THAT ARE RAPIDLY ATTACKED BY HYDROCARBON FLUIDS, SUCH AS GASOLINE, DIESEL FUEL, KEROSENE, AND SIMILAR MATERIALS. EVEN TRACE AMOUNTS OF THESE MATERIALS IN WATER WILL TEND TO ACCUMULATE IN THE PLASTIC PARTS, LEADING TO COMPLETE FAILURE OF THE FLOWMETER.

SECTION 2 AVAILABLE MODELS

DESCRIPTION (BRONZE BODY)

	Port Size	Normal Operating Range	Part Number
Water Meter	1/2"	1 to 20 GPM	FTB6105
Water Meter	3/4"	1 to 25 GPM	FTB6107
Water Meter	3/4"	2 to 30 GPM	FTB6107X
Water Meter	1"	3 to 50 GPM	FTB6110
Water Meter	1-1/2"	5 to 100 GPM	FTB6115
Water Meter	2"	8 to 160 GPM	FTB6120

DESCRIPTION (POLYMER BODY)

	Port Size	Normal Operating Range	Part Number
Water Meter	1/2"	1 to 25 GPM	FTB6205
Water Meter	3/4"	1 to 25 GPM	FTB6207
Water Meter	3/4"	2 to 30 GPM	FTB6207X

SECTION 3 INSTALLATION

3.1 UNPACKING

Remove the Packing list and verify that all equipment has been received. If there are any questions about the shipment, please call OMEGA Customer Service Department at 1-800-622-2378 or (203) 359-1660.

Upon receipt of shipment, inspect the container and equipment for any signs of damage. Take particular note of any evidence of rough handling in transit. Immediately report any damage to the shipping agent.

NOTE

The carrier will not honor any claims unless all shipping material is saved for their examination. After examining and removing contents, save packing material and carton in the event reshipment is necessary.

3.2 INSTALLATION

The meter must be installed in a clean pipeline, free from any foreign materials. The dial must be mounted face upwards, no more than 45° from the horizontal.

The meter must be inserted with the flow in the direction of the arrow molded, or cast, into the meter body.

Couplings are provided, which allow for connection with NPT threads in sizes 1/2" through 1". The 1-1/2" and 2" meters have NPT screwed ends or oval flanged ends.

SECTION 4 START-UP PROCEDURE

The meter piston can be damaged if the meter is subjected to full flow conditions prior to expelling all the air from the piping. Therefore, turn on the flow gradually.

SECTION 5 SPECIFICATIONS

ACCURACY:	± 1-1/2% of reading at normal operating range
FLUID TEMPERATURE RANGE:	to + 120° F.
WETTED PARTS:	bronze or polyacetal body; graphite-impregnated polystyrene, molybdenum-loaded and glass-filled nylon, barium ferrite magnet and polyacetal internal wetted parts, neoprene gaskets, polymer strainer (stainless steel for 2" unit).
MAXIMUM PRESSURE DROP:	15 PSID at 1 CSTK
MAXIMUM PRESSURE:	150 PSIG
MAXIMUM TOTAL (MILLIONS OF GALLONS)	10 up to 1"; 100 for 1-1/2" and 2"

MODEL	NORMAL OPERATING RANGE	MIN. TEST FLOW (GPM)	LENGTH OVERALL	DIA.	HEIGHT OVERALL	SHIPPING WEIGHT (LBS.)	"-PR" (PULSE/ GAL)
			(<----------INCHES----------->)				STD/OPT
FTB6105	1-20 GPM	0.25	7.5	4.75	5	6	100/200
FTB6107	1-25 GPM	0.25	7.5	4.75	5	6	100/200
FTB6107X	2-30 GPM	0.50	9	4.75	5.5	15	66.6/133.2
FTB6110	3-50 GPM	0.75	10.75	7.06	6.94	24	246/49.2
FTB6115	5-100 GPM	1.5	12.63	7.5	8.5	26	11.3/22.6
FTB6120	8-160 GPM	2	15.25	8.75	10.5	42	5.6/11.1
FTB6205	0.25-25 GPM	0.25	7.5	4.82	5	4	100/200
FTB6207	0.25-25 GPM	0.25	7.5	4.82	5	4	100/200
FTB6207X	0.5-30 GPM	0.50	9	5.03	5.5	5	66.6/133.2

*minimum measurable with ± 5% of reading accuracy

SECTION 6 OPTIONS

Add suffix "-PT" or "-PR" for pulse output. Register is no longer hermetically sealed with pulse output, but is weatherproof. Pulse option adds 0.63 lb. to weight, and 2-1/8" height for PR. Pulse option adds 2 lbs. to weight and 2" height for PT.

Pulse Output Options:

6.1 "-PT": 1 pulse/gallon for 1" or smaller: 1 pulse/10 gallon for 1-1/2" and 2". PT pulser is a limit switch rated at 3A @125 VAC.

6.2 "-PR": 3 watt reed switch rated for minimum 1.5 million pulses. Reed switch is field replaceable. Spare part - part number FTB76-PR. For Pulse Rate see PR (pulse/gallon) Above: Standard or Optional.

SECTION 6 OPTIONS

6.1 -PT OPTION

To be wired in series. Refer to Figure 1. This unit requires power from an external source.

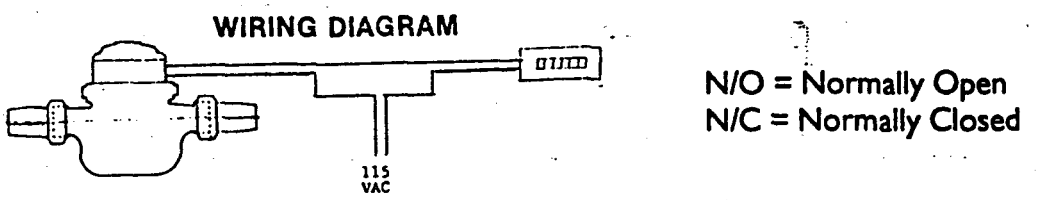

Figure 1. Wiring Diagram for - PT Option

The transmitting element is a 3A limit switch, giving a closure rate as follows:

5/8"	1 Contact Per Gallon
3/4"	1 Contact Per Gallon
1"	1 Contact Per Gallon
1-1/2"	1 Contact Per 10 Gallons
2"	1 Contact Per 10 Gallons

6.2 -PR OPTION

To be wired in series. Refer to Figure 2. The unit requires power from an external source.

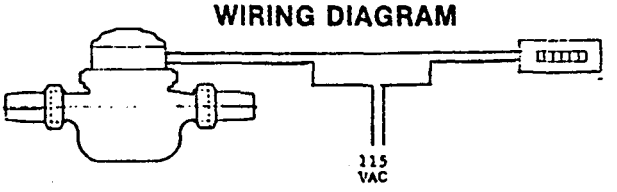

Figure 2. Wiring Diagram for -PR Option

The transmitting element is a dry contact reed switch. SPST, N/O (normally open) with a 3-watt non-inductive rating. Contact Closures are:

SIZE	STANDARD (Contacts/ gallon)	OPTIONAL (Contacts/ gallon)
5/8"	100.0	200.0
3/4"	66.6	133.2
1"	24.6	49.2
1-1/2"	11.3	22.6
2"	-5.6	11.1

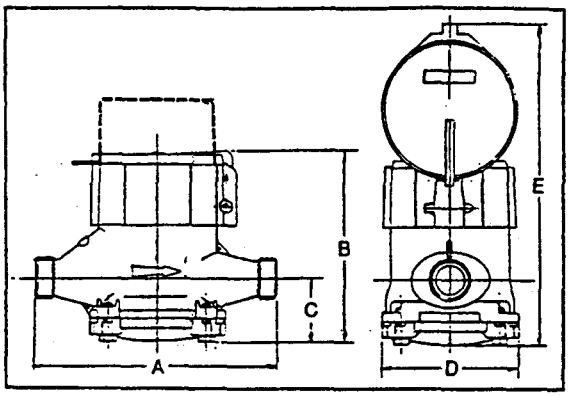

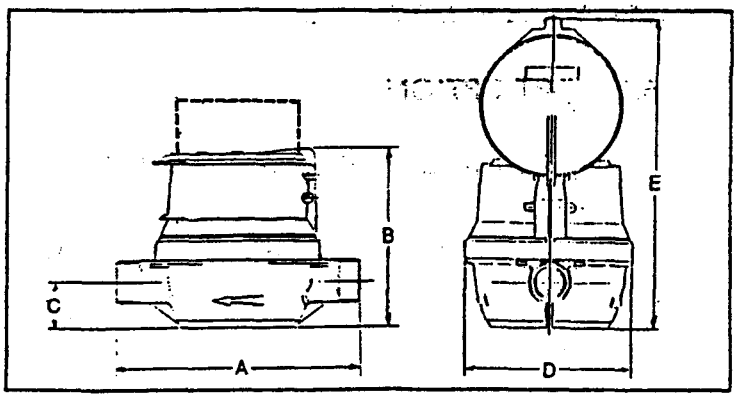

BRONZE BODY

Dimensions and Net Weights

Meter Size	Dimensions (inches)					Weight (lbs.)
	A	B	C	D	E	
5/8" x 1/2"	7 1/2	6	2 1/16	4 1/4	10	7 1/16
5/8" x 3/4"	7 1/2	6	2 1/16	4 1/4	10	7 1/16
3/4" x 3/4	9	6 7/16	2 1/2	4 1/2	10 7/16	8 1/2
1"	10 3/4	7 7/16	2 3/16	7 1/4	11 7/16	13

POLYMER BODY

Dimensions and Net Weights

Meter Size	Dimensions (inches)					Weight (lbs.)
	A	B	C	D	E	
5/8" x 1/2"	7 1/2	5 3/8	1 3/8	4 3/4	9 3/8	3 1/4
6/8" x 3/4"	7 1/2	5 3/8	1 3/8	4 3/4	9 3/8	3 1/4
3/4" x 3/4"	9	5 15/16	1 15/16	5	9 15/16	3 5/8

When used with couplings, add to dimentsion (inches) A:

Size	Bronze Body	Polymer Body
5/8 X 1/2	4 7/8	4 3/4
5/8 X 3/4	5 1/8	5
3/4 X 3/4	5 1/8	5
1	5 3/8	

When used with pulser, add to dimension B:

Pulsers model PT★ 2 3/16
Pulsers model PR 2 1/2
*Dotted line shows position of PT pulsers.

Cover is deleted when meter is provided with a pulser.

NOTE: All above dimensions are inch measurements.

OMEGA DIMENSIONS
COLD WATER METERS

FTB 6105	FTB 6205
FTB 6107	FTB 6207
FTB 6107X	FTB 6207X
FTB 6110	

View on direction of arrow "A" showing flow arrow and body markings.

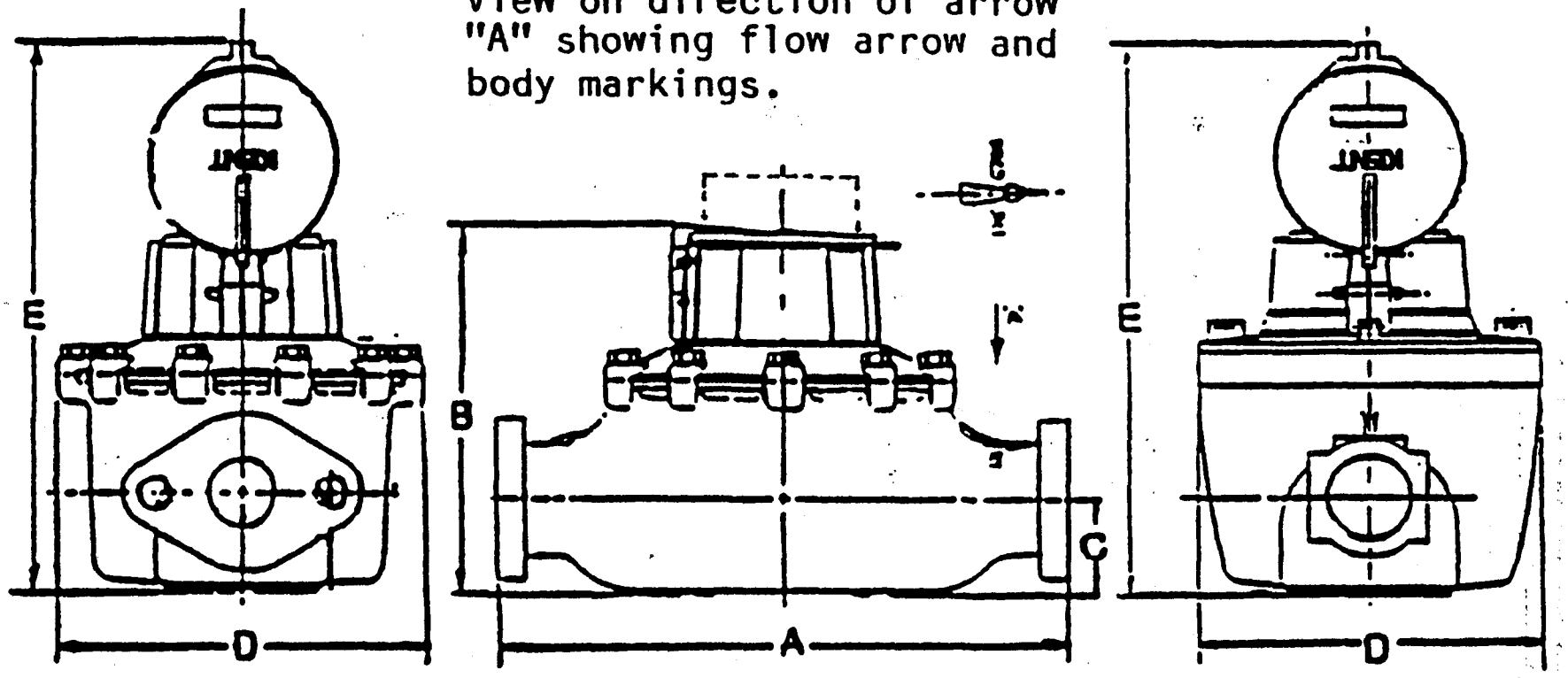

SIZE	LENGTH (A)	HEIGHT (B)	CENTER LINE TO BOTTOM (C)	DIAMETER (D)	HEIGHT W/LID UP (E)	HEIGHT W/PULSER		SHIPPING WEIGHT (LBS)
						PT	PR	
1-1/2"	13"	8-1/2"	2-1/8"	8-1/2"	12-1/4"	10-7/16"	11"	24-6/8
2"	17"	10-1/4"	1-3/4"	8-3/4"	14-1/4"	12-5/16	12-3/4"	42-7/8

Connections are oval flanged or NPT Female.

Meters are designed for Cold Water Service up to 120°F.
At 150 PSIG. Strainers with a 40 Mesh Screen should be used if foreign matter is present.

NOTE: Dotted line shows position of PT or PR Pulser.
Cover is deleted when meter is provided with a pulser.

OMEGA DIMENSIONS

FTB 6115 FTB 6120
COLD WATER METER

Servicing USA and Canada: Call OMEGA Toll Free

OMEGA Engineering, Inc.

One Omega Drive, Box 4047
Stamford, CT 06907-0047 U.S.A.
Headquarters: (203) 359-1660

Sales: 1-800-826-6342 / 1-800-TC-OMEGA (USA and Canada)
Customer Service: 1-800-622-2378 / 1-800-622-BEST (USA only)
Engineering: 1-800-872-9436 / 1-800-USA-WHEN (USA and Canada)
FAX: (203) 359-7700 TELEX: 996404 EASYLINK:62968934 CABLE: OMEGA

Servicing Europe: United Kingdom Sales and Distribution Center

OMEGA Technologies Ltd.

P.O. Box 1, Broughton Astley, Leicestershire
LE9 6XR, England
Telephone: (0455) 285520 FAX: (0455) 283912

The OMEGA Complete Measurement and Control Handbooks & Encyclopedias™

- Temperature
- Pressure, Strain & Force
- Flow and Level
- pH and Conductivity
- Data Acquisition Systems
- Electric Heaters

Call for Your FREE Handbook Set Today: (203) 359-RUSH

APPENDIX J
AIR COMPRESSOR

Manufacturer/ Supplier:	Ingersoll-Rand Air Center 9130D Pennsauken Highway Pennsauken, NJ 08110 (800) 776-1366 Fax: (609) 488-0462 Contact: David Thomas
Model:	2475N7.5
S/N:	3OT 766409

SAFETY PRECAUTIONS

DO NOT DESTROY

This manual contains important safety information, and should be made available to all personnel who operate and/or maintain this product. Carefully read this manual before attempting to operate or perform maintenance on this compressor.

OWNER'S MANUAL

MODEL 2475

TWO STAGE FINGER VALVE AIR COMPRESSOR

INGERSOLL-RAND®

T30

REFER ALL COMMUNICATIONS TO THE NEAREST INGERSOLL-RAND FULL SERVICE DISTRIBUTOR.

Form SCD-619
November 1994

⚠ WARNING

STATEMENT CONCERNING THE USE OF THIS EQUIPMENT FOR BREATHING AIR AND/OR AQUA LUNG SERVICE.

If the model number on this air compressor contains the letters "BAP"; the air compressor is suitable for breathing air services. Compressors that DO NOT bear this designation are NOT capable of producing air of breathing quality. For use in breathing air applications, an air compressor must be fitted with additional specialized equipment to properly filter and/or purify the air to meet all applicable federal, state and local laws, rules, regulations and codes, such as, but not limited to, OSHA 29 CFR 1910.34. Compressed Gas Association Commodity Specifications G-7.1-1966. Grade D Breathing Air, and/or Canadian Standards Association. Should the Purchaser and/or User fail to add such specialized equipment, and proceed to use the air compressor for breathing air service, the Purchaser/User assumes all liability resulting therefrom without any responsibility or liability being assumed by Ingersoll-Rand Company.

The purchaser is urged to include the above provisions in any agreement for any resale of this air compressor.

Hazardous Vapors. Can cause severe nausea, fainting or death.
Compressed air from this air compressor may contain poisonous carbon monoxide.
Certain sprayed material such as paints, insecticides, weed killer, sand, etc., may be harmful if inhaled or used in a closed area.

Never directly inhale the compressed air produced by this air compressor.

Always read labels with containers when spraying paints or poisons.

Always use the air compressor in a well-ventilated area.

Use a respirator or mask whenever there is a chance that you might inhale any sprayed material. If a mask is used, read all instructions provided with the mask to ensure it will protect you from the materials you are spraying.

Hazardous Voltage. Can cause severe injury or death.

Always disconnect power supply before performing any maintenance or repair work .

Always connect power supply to a properly grounded electrical circuit with the specified voltage and fuse protection.

Never operate compressor in rain, a wet area, or near an explosive environment.

Flammable vapors. Can cause a fire or explosion, and result in severe injury or death.

Sparks from the motor's electrical contacts can ignite flammable vapors from gasoline, natural gas or solvents.

Do not operate the air compressor in any areas where explosive or flammable vapors or liquids may exist.

Compressed air has great force.
Over-pressurizing the air receiver, or using a receiver which does not meet the design limits for this compressor, can cause the air receiver to rupture or explode, and result in severe injury or death.
Changes to the air receiver structure will cause the air receiver to weaken and can cause the air receiver to rupture or explode, and result in severe injury or death.
Internal rusting in the air receiver will cause the air receiver to weaken and can cause the air receiver to rupture or explode, and result in severe injury or death.
Air pressure beyond design limits can cause the air receiver to rupture or explode, and result in severe injury or death.
Improper use of air tools or air attachments can cause explosion, and result in severe injury or death.

The air receiver is equipped with a relief valve to protect against over-pressurization. DO NOT REMOVE, ADJUST OR MAKE SUBSTITUTIONS FOR THE RELIEF VALVE. Periodically pull the ring on the relief valve to ensure it operates freely. If the valve is stuck or does not operate freely, it must be replaced.

Never drill into, weld to, or alter the air receiver in any manner.

Drain water/condensate from the air receiver daily or before each use.

Pressure switch and unloader valve operation is related to motor/engine horsepower, air receiver rating, and relief valve setting. DO NOT ATTEMPT TO ADJUST, REMOVE OR BYPASS THE PRESSURE SWITCH, OR CHANGE OR MODIFY ANY PRESSURE CONTROL RELATED DEVICE.

Do not use any air tools or air attachments without first determining the maximum air pressure recommended for that particular air tool or air attachment.

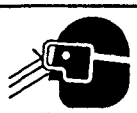

Compressed air. Can propel dirt, sand, metal shavings, etc., and result in severe injury.

Never point air nozzle or sprayer toward any part of the body, or another person.

Always wear safety glasses or goggles when servicing the compressor.

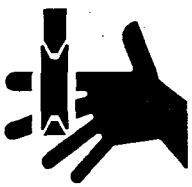

Moving Parts. Can cause severe injury.
Compressors equipped with electric motors are designed to cycle automatically when the power is ON. Automatic cycling during service or repair can cause severe injury.

Always disconnect the power supply on electric motor models before performing any maintenance or repair work on the compressor.

Always disconnect the power supply on electric motor models if the compressor is to be left unattended.

Always ensure pressure is released from the compressor, air receiver, and all attachments before performing any maintenance or repair.

Never operate the compressor with the beltguard assembly removed, damaged or broken.

Hot Parts. Compressors get hot while running, and can cause severe burn if touched.

Never touch the compressor, motor/engine, or tubing during or shortly after compressor operation.

WARNING: THE EXPORT OR RE-EXPORT OF THIS DRAWING OR A PRODUCT PRODUCED BY THIS DRAWING IS SUBJECT TO U.S. EXPORT ADMINISTRATION REGULATIONS AND OTHER APPLICABLE GOVERNMENTAL RESTRICTIONS OR REGULATIONS.

CONTENTS

SECTION 1 - GENERAL INFORMATION 5

INTRODUCTION 5
ADDITIONAL REFERENCES 5
IMPORTANT STATEMENTS 5
AIR COMPRESSOR DESCRIPTION 5
Application 5
Construction 5
Air Inlet Filter 5
Relief Valves 5
Intercooler Assembly 5
Frame Pressure Vent 5
COMPRESSOR PACKAGE DESCRIPTION 5
Regulation 5
Electric Motor 5
Pressure Switch 5
Receiver 5
Pressure Gauge 6
Manual Drain Valve 6
OPTIONAL PACKAGE EQUIPMENT 6
Motor Starter 6

SECTION 2 - INSTALLATION & START-UP 6

UNPACKING 6
Inspection For Damage 6
Unloading 6
Uncrating 6
LOCATION 6
Ventilation 6
Cold Climates 6
Damp or Humid Environments 6
FOUNDATION & LEVELING 6
Foundation 6
Leveling 6
PIPING INSTALLATION 6
Inlet Piping 6
Discharge Piping 7
Condensate Discharge Piping 7
ELECTRICAL/MOTOR INSTALLATION 7
Pre-installation Checks 7
Starting Switch 7
Magnetic Starters 7
Motor Protection 7
Fuses 7
Pressure Switch 7
Wiring Requirements 7
COMPRESSOR LUBRICATION 7
START-UP PROCEDURES 8
Pre-start Checks 8
Start-up Procedures 8

SECTION 3 - TROUBLESHOOTING 9

SECTION 4 - MAINTENANCE 10

SECTION 5 - PARTS LIST 11

GENERAL INFORMATION 11
DESCRIPTION 11
EXPLANATION OF COLUMNS 11
General 11
Reference Number (REF. NBR.) 11
Part Number 11
Description 11
Quantity (QTY.) 11
Spares 11
STEP SAVER KITS 11
ORDERING INSTRUCTIONS 11

LIST OF ILLUSTRATIONS

Figure 1 - Model 2475 Compressor Components 4
Figure 2 - Typical Model 2475 Package Components 4
Figure 3 - Methods of Leveling Unit 6
Figure 4 - Typical Inlet Piping Arrangement 7
Figure 5 - Typical Single-Phase Wiring 9
Figure 6 - Typical Three-Phase Wiring 9
Figure 7 - Compressor Frame Assembly 13
Figure 8 - High Pressure Valve Plate Assembly 13
Figure 9 - Low Pressure Valve Plate Assembly 13
Figure 10- Typical Vertical Package 14
Figure 11 - Model 2475 Bare Compressor 15
Figure 12 - Intercooler Assembly & Tubing 16

LIST OF TABLES

Table 1 - Model 2475 Leading Particulars 4
Table 2 - T30 SELECT™ Material Compatibility 8
Table 3 - Pre-start Checklist 8
Table 4 - Wire Selection Guide 9
Table 5 - Troubleshooting Guide 9
Table 6 - Maintenance Guide 10

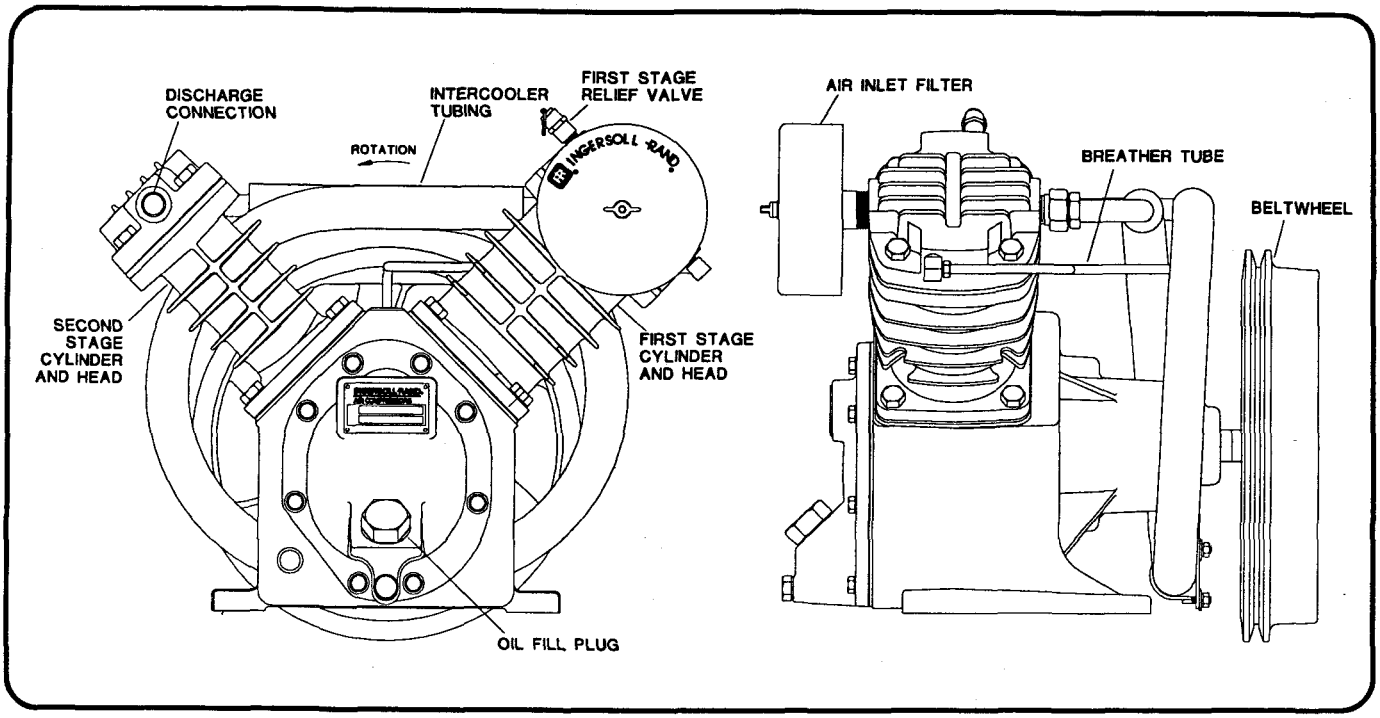

Figure 1 - Typical Model 2475 Compressor Components

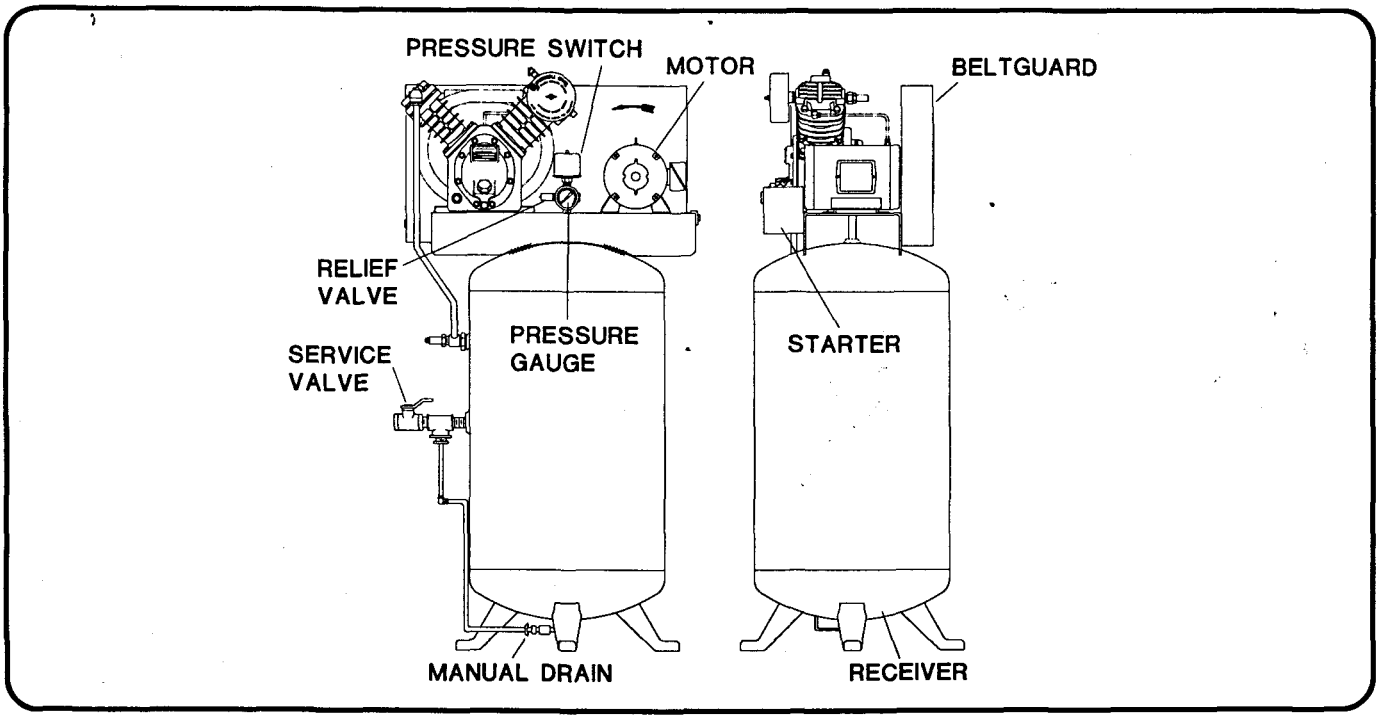

Figure 2 - Typical Model 2475 Package Components

NO. CYLINDERS	2
COMPRESSION STAGES	2
POWER SUPPLY	ELECTRIC MOTOR
COOLING METHOD	AIR
REGULATION	AUTO START & STOP
MAX. DISCHARGE PRESSURE	200 PSIG (14 kg/cm^2)
LUBRICANT CAPACITY	43 fl. oz. (1.27 liters)
RECOMMENDED LUBRICANT	T30 SELECT™
FIRST STAGE RELIEF VALVE	80 PSIG

Table 1 - Model 2475 Leading Particulars

SECTION I - GENERAL INFORMATION

INTRODUCTION

This manual provides safe and reliable instructions for the installation, operation and maintenance of your Ingersoll-Rand Model 2475 Air Compressor. Carefully read this manual before attempting to operate or perform any maintenance on this compressor. If you are uncertain about any of the instructions or procedures provided in this manual, contact your nearest Ingersoll-Rand Full Service Distributor. We recommend you retain this manual, and all publications provided with your air compressor, in a location which is accessible to all operators and maintenance personnel when operating or servicing this air compressor.

ADDITIONAL REFERENCES

Unless otherwise stated, dimensions, weights and measurements are provided in standard U.S. measure followed in parentheses by the metric conversion. Any torque values given are stated in inch or foot pounds followed by the Newton-meter equivalent in parentheses. Electrical characteristics are given in voltage-phase-hertz.

IMPORTANT STATEMENTS

Danger, Warning, Caution and Notice statements are used in this manual and are defined below. A statement will always precede the text to which it applies, or follow the paragraph heading under which it applies. Be sure to read the important information on the inside front and inside back cover.

⚠ DANGER

Danger is used to indicate the presence of a hazard which *will* cause *death, severe personal injury*, or substantial property damage if the danger statement is ignored.

⚠ WARNING

A warning is a statement which indicates the presence of a hazard which *can* cause *death, severe personal injury*, or substantial property damage if the warning is not heeded.

⚠ CAUTION

A caution is a statement which indicates the presence of a hazard which will or can cause *minor* personal injury or property damage if the caution is not heeded.

NOTICE

A notice is used to advise the user of installation, operation or maintenance information which is important, but not hazard related.

AIR COMPRESSOR DESCRIPTION

(Refer to Figure 1 for component location)

APPLICATION. The Ingersoll-Rand Model 2475 is a compact, cast iron, two-stage reciprocating air compressor capable of delivering compressed air at a maximum discharge pressure of 200 PSIG (14 kg/cm2). The compression stages are designed with efficient intercooler tubing and proportioned compression ratios to provide a dependable source of compressed air for many industrial applications.

CONSTRUCTION. In addition to the many advances offered by compact, air-cooled construction, moderate compressor speeds, efficient single-piece inlet and discharge finger valves, and solid-end connecting rods, two-stage machines such as the 2475 are equipped with highly efficient intercooler tubes that obtain maximum heat dissipation between stages of compression, resulting in more air per horsepower and less trouble from oil carbonization. Also, simplified design permits rapid access to any part of the unit for inspection or replacement of parts.

AIR INLET FILTER. The Model 2475 uses a filter element to trap dirt and debris in the inlet air as it is drawn into the compressor. The element must be kept clean at all times, as a dirty or clogged element will reduce the capacity and performance of the air compressor. The compressor should never be operated with the filter removed. While the standard element is suitable for most industrial applications, a heavy-duty element may be required if the compressor is located in an environment which contains heavy concentrations of dirt, dust or other airborne residue. Consult your local Ingersoll-Rand Air Center or Full Service Distributor.

RELIEF VALVES. A relief valve is furnished on the discharge side of the first stage head. Package-mounted compressors also feature a discharge relief valve and a receiver relief valve. These valves are designed to help protect the unit from over-pressurization at each stage of compression. Should a valve leak or become defective, it must be replaced.

INTERCOOLER ASSEMBLY. This compressor is equipped with coiled copper intercooler tubing between the compression stages. The purpose of the intercooler tubing is to remove excess heat from the compressed air, and thus improve the compressor's efficiency by decreasing the final discharge air temperature.

FRAME PRESSURE VENT. A breather tube is routed from the shaft end cover to the first stage inlet connection. The breather tube permits pulsations created by the reciprocating action of the crankshaft to be vented from the compressor frame, thus preventing pressure build-up within the frame.

COMPRESSOR PACKAGE DESCRIPTION

(Refer to Figure 2 for component location)

REGULATION. The Model 2475 Air Compressor is equipped with Automatic Start and Stop Control Regulation. Automatic Start and Stop Control is obtained by means of the pressure switch which controls the operation of the drive motor. When the receiver pressure reaches the pre-set cut-out point of the pressure switch, the switch contacts open, cutting off the power to the drive motor and stopping the compressor. When the air receiver pressure drops to the re-set pressure of the pressure switch, the switch contacts close, restoring power to the drive motor and restarting the compressor.

ELECTRIC MOTOR. The Model 2475 features a base plate-mounted, single phase or three-phase electric motor.

PRESSURE SWITCH. The pressure switch is a piston-actuated differential control used to establish, and monitor changes in, the discharge pressure range. The pressure switch has two controls; the Range Adjustment sets the cut-in and cut-out pressure levels, while the Differential Adjustment establishes the span between the two pressures. When the compressor is operated in the Automatic Start and Stop mode, the cut-out pressure is the point at which the compressor reaches the maximum discharge level and the motor is stopped. The cut-in pressure is the point at which the motor is started. The pressure switch is provided in a NEMA 1 enclosure.

RECEIVER. If the air system into which the compressor discharges does not have sufficient volume, the compressor will cycle too frequently. In this case, an air receiver must be used to provide enough volume to

operate the regulation system of the compressor. The Model 2475 is available on a vertical ASME, National Board coded receiver, and include a discharge check valve, pressure gauge, manual drain valve, service valve and relief valve.

PRESSURE GAUGE. The pressure gauge displays the current working pressure in the receiver.

MANUAL DRAIN VALVE. As condensate is separated from the compressed air, it settles at the bottom of the air receiver. Since excessive condensate accumulation can impair air delivery, it is important to drain condensate through the manual valve daily (See SECTION 6 - SCHEDULED MAINTENANCE).

OPTIONAL PACKAGE EQUIPMENT

MOTOR STARTER. Receiver-mounted units are equipped with a duty-rated magnetic starter. These starters are UL and CSA approved, and are designed for full-voltage, across-the-line starting of single-phase and three-phase motors. They are available in NEMA 1 enclosures, and include thermal overload relays which, together with the proper overload heaters provide protection to motor windings from harmful currents and resultant temperature rises which may be caused by overloading the motor, sustained line voltage or stalled rotor. Each starter also features two-pole UL Class CC rejection fuse blocks for control circuit protection. All starters have an external RESET switch and, if desired, are available with an externally-mounted ON/OFF switch.

SECTION 2 - INSTALLATION & START-UP PROCEDURES

UNPACKING

⚠ WARNING

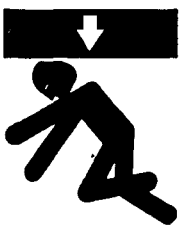

Falling objects. Can cause severe injury or death.

Always ensure lifting equipment is properly rated for the weight of the unit.

Do not walk under suspended machinery.

Do not perform any maintenance on the compressor while it is suspended.

NOTICE

Do not operate compressor while it is mounted on the shipping pallet or crate.

INSPECTION FOR DAMAGE. Your compressor was inspected at the factory and packaged for protection against shipping damage. The purchaser assumes title to the compressor equipment at the manufacturer's shipping dock. Immediately upon receipt of the equipment, it should be inspected for any damage or missing parts which might have occurred during shipment. If any parts are found to be damaged or missing, demand an immediate inspection by the carrier. The transportation company's agent should also make a notation to that effect on the bill of lading. Claims for damage should be settled directly with the transportation company.

UNLOADING. Ensure adequate lifting equipment is available at the job site for unloading the compressor. Lift the compressor by the shipping pallet mounted on the base to prevent damaging the unit.

UNCRATING. Before uncrating, check the nameplate on the face of the compressor to ensure the unit is the model and size ordered. If the compressor is ordered as part of a package, check the motor nameplate to ensure the motor is compatible with your electrical conditions (Voltage-Phase-Hertz).The compressor must be removed from the shipping pallet prior to use.

LOCATION

VENTILATION. Adequate ventilation is important in selecting a location for your compressor. Choose a clean, relatively cool atmosphere with plenty of fresh air. Ventilation by gravity or mechanical means is acceptable.

COLD CLIMATES. In cold climates, it is desirable to install the compressor within a heated building. Choose a clean, relatively cool location, and provide ample space around the unit for proper air flow, cooling and general accessibility. Place the beltwheel side toward the wall, leaving at least 15 inches (380 mm) for air circulation to the beltwheel. (Note: If a detached receiver is to be used, consider placing the receiver outdoors to provide more efficient heat dissipation, keeping in mind that condensation in the receiver may freeze).

DAMP OR HUMID ENVIRONMENTS. If the compressor is to be operated in a damp climate, or under conditions of high humidity, proper ventilation is important to minimize the formation of moisture in the frame.

Condensation of moisture in the compressor frame leads to lubricant breakdown and the formation of sludge which can cause running parts to wear out prematurely. If the compressor is to be used in a damp or high humidity atmosphere, running the compressor for longer intervals can help to prevent moisture build-up.

FOUNDATION & LEVELING

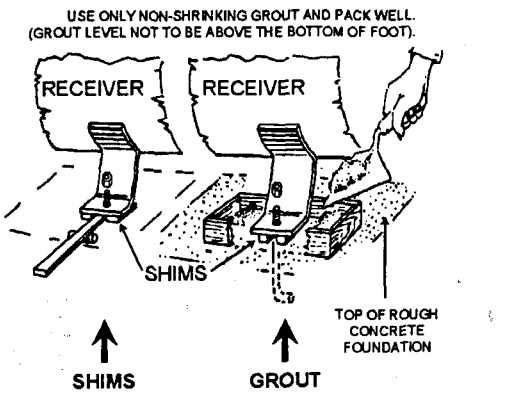

Figure 3 - Methods of Leveling Unit

FOUNDATION. The compressor may be bolted to any substantial, relatively level foundation or base. If such a surface is not available, one must be constructed. Foundation bolts must be of sufficient length to project at least 1/2" (13 mm) through the nuts to allow for leveling.

LEVELING. Align the foundation bolts with the mounting holes on the base. Install nuts on the foundation bolts and tighten any three of the nuts evenly to a moderate torque. Check the unit for level. If the compressor is not level, insert metal shims under one foot to obtain level.

After all shims are inserted and the unit is level, tighten the nuts on all foundation bolts to a moderate torque.

Check for stress by loosening the nuts one at a time, and noting any upward movement of the mounting foot. Any noticeable movement indicates that Step 2 must be repeated.

Severe vibration will result when nuts are pulled down tightly and the feet are not level. This can lead to undue stress on the compressor frame and the base plate.

PIPING INSTALLATION

INLET PIPING. If the air in the vicinity of the compressor is unduly dirty or contains corrosive fumes, we recommend piping the air filter to a source of cleaner air or use a special heavy duty filter. If it is necessary to install inlet piping, make the line as short and direct as possible and

as large, or larger than the diameter of the inlet connection at the compressor (One inch). The inlet piping must increase in diameter for every 50 feet (15.25m) of length. If the total length is between 50 feet (15.25m) and 100 feet (30.5m), increase the pipe diameter at the mid-point in the length, i.e., if the total length is 80 feet (24.4m) increase the pipe diameter at the 40-foot (12.2m) point. Connect the air filter to the end of the inlet air pipe. If the inlet filter is piped outdoors, it should be hooded to prevent the entrance of rain or snow. See Figure 4. Fine airborne dust, such as cement and rock dust, require special filtration equipment not furnished as standard equipment on these compressors. Such filtration equipment is available from Ingersoll-Rand Company.

DISCHARGE PIPING. The compressor is equipped with a 1/2" NPT discharge connection. When installing discharge piping to a detached receiver or system, the following precautions should be observed.

1). It is good practice to install a check valve as close to the receiver as possible. DO NOT INSTALL THE CHECK VALVE IN THE COMPRESSOR DISCHARGE CONNECTION. NOTE: Check valves are shipped loose with bare compressors.

2). Discharge piping must be at least 5/8" diameter tubing or pipe. The piping, fittings, receiver, etc. must be certified safe for at least 200 PSIG (14 kg/cm2) working pressure.

3). The discharge piping should be as short and direct as possible, and must be adequately braced. Pipe thread sealant should be used on all threads, and all joints must be made up tightly to prevent air leaks.

CONDENSATE DISCHARGE PIPING. A 1/4" condensate discharge connection is provided at the receiver drain valve. Condensate discharge piping should be routed to a suitable drain. To prevent back pressure which could impair compressor performance, discharge piping should be at least one size larger than the connection.

The piping should be as short and direct as possible, and firmly secured at both ends.

ELECTRICAL/MOTOR INSTALLATION

The electrical installation should be performed by a licensed electrician who is familiar with the regulations of the National Electrical Code and the requirements of applicable local codes.

PRE-INSTALLATION CHECKS. Before wiring the motor to the power supply, the following checks must be performed to ensure compatibility.

1). Check the motor rating, as shown on the motor nameplate, against the power supply to ensure they have the same characteristics (voltage, phase and hertz).

2). Ensure the electrical supply provides sufficient ampere rating.

3). Ensure power supply wires are of proper gauge, and no other equipment is operated from the same line.

STARTING SWITCH. If the ratings of the motor and power supply are not the same, do not connect the motor. Consult a qualified electrician before proceeding with the installation. The electrical wiring between the power supply and the electric motor varies according to the motor horsepower.

MAGNETIC STARTERS. Compressors regulated by automatic start and stop control using motors with ratings higher than 1-1/2 horsepower on 115 volts, single-phase; 3 horsepower on 230 volts, single-phase; or 3 horsepower on 230 or 460 volts, three-phase must be equipped with a magnetic starter. Duty-rated starters permit the pressure switch to be wired in series with the motor leads. The wiring diagrams at the end of this section show typical wiring arrangements for single-phase and three-phase motors and starters.

MOTOR PROTECTION. All starters must include thermal overload protection to prevent possible motor damage. These starting switches are furnished with the manufacturer's instructions for installation. Ingersoll-Rand cannot accept responsibility for damages arising from failure to provide adequate motor protection.

FUSES. The momentary starting current of an electric motor is greater than its full load current. Refer to the National Electric Code to determine the proper fuse or circuit breaker rating required for your installation. Fuse failure usually results from the use of fuses with insufficient capacity. If fuses are the correct size and still fail, check for conditions that cause local heating, such as bent, weak or corroded fuse clips.

PRESSURE SWITCH. If pressure switch installation is required, select a pulsation free point in the system which registers receiver pressure. Select a high point where condensate will not accumulate. Most pressure switches may be aligned in any position, but must be securely mounted against a solid surface. Heed all instructions provided with the pressure switch when installing. The connecting line to the receiver should be short and direct, and certified safe for at least 200 PSIG (18 kg/cm2).

Wire the pressure switch to the motor magnetic starter in accordance with the wiring schematic provided with the pressure switch.

WIRING REQUIREMENTS. Using the proper size wire is important to the safety and operation of your air compressor. Connections must also be mechanically and electrically secure. Information for selecting the proper wire size, and securing connections, should be provided with your motor. If this information is not available, the wire sizes shown in Table 4 can be used as a safe guide if the distance from the electrical supply does not exceed 100 feet (30.5m).

The use of undersized wire results in low voltage and high amperes, and unnecessary tripping of overload relays or blown fuses. If other electrical equipment is connected to the same circuit, the total electrical load must be considered in selecting the proper wire size(s). A burned out motor due to low voltage may result unless the motor is properly protected.

COMPRESSOR LUBRICATION

Ingersoll-Rand recommends the use of only T30 SELECT™ synthetic lubricant in the compressor. T30 SELECT™ reduces wear and eliminates most carbon build-up on compressor valves. This allows the compressor to run more efficiently and for valve life to be increased.

You must be certain that the downstream components of your compressor system will not be damaged by the action of this lubricant, as this lubricant is not compatible with certain materials. Please refer to the material compatibility table.

Fill the crankcase to the bottom thread of oil fill opening. Hand-tighten the oil plug.

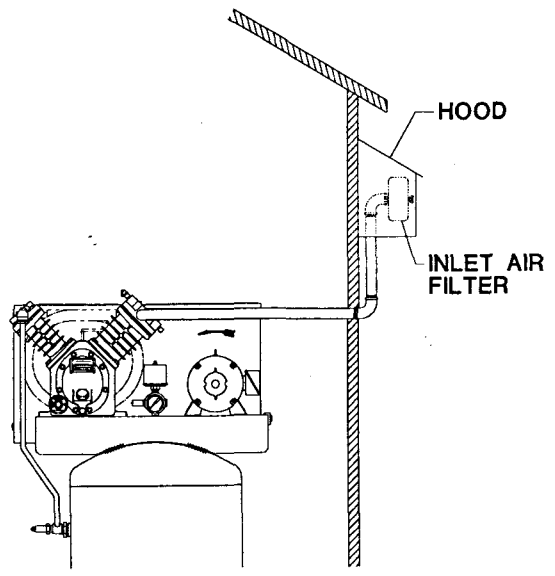

Figure 4 - Typical Inlet Piping Arrangement

Refer to Table 2 for important material compatibility information concerning T30 SELECT™.

Suitable	Not Recommended
Viton®	Neoprene
Teflon®	Natural Rubber
Epoxy (Glass Filled)	SBR Rubber
Oil Resistant Alkyd	Acrylic Paint
Flurosilicone	Lacquer
Flurocarbon	Varnish
Polysulfide	Polystyrene
2-Component Urethane	PVC
Nylon	ABS
Delrin®	Polycarbonate
Celcon®	Cellulose Acetate
High Nitrile Rubber (Buna N. NBR more than 36% Acrylonitrile)	Low Nitrile Rubber (Buna N. NBR less than 36% Acrylonitrile)
Polyurethane	EPDM
Chlorosultonate	Ethylene Vinyl Acetate
Polyethylene	Latex
Epichlorohydrin	EPR
Polyacrylate	Acrylics
Melamine	Phenoxy
Polypropylene	Polysulfones
Baked Thenoics	Styrene Acrylonitrile (San)
Epoxy	Butyl
Modified Alkyds	(® Indicates Trademark of DuPont Corporation)

Table 2 - T30 Select™ Material Compatibility

START-UP PROCEDURES

⚠ WARNING

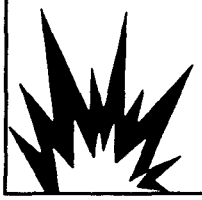

Compressed air has great force. Can cause severe injury or death.

Always relieve pressure from compressor and receiver before removing plugs, fittings, etc.

PRE-START CHECKS. See Table 3, PRE-START CHECKLIST, before putting the unit in operation.

START-UP PROCEDURES. The following procedures should be followed when initially starting the unit, and to verify the integrity of the installation.

1). Close the service valve.

2). Momentarily start the compressor to ensure the beltwheel rotation is the same as that shown by the directional arrow. If rotation is incorrect, interchange any two of the three leads on three phase motors. On single phase motors, refer to the reverse wiring diagram on the motor nameplate.

3). Start the compressor. As the unit builds pressure, check for air leaks.

4). When the receiver pressure reaches 175 PSIG, the unit should stop.

5). Open the service valve and/or drain valve to bleed air from the receiver. Note the pressure at which the compressor starts.

6). As the unit builds pressure, check for unusual noise or vibration.

7). Pull the ring on all relief valves to ensure they relieve and reseat. Do this several times.

8). Shut the compressor off. When all pressure has been vented from the compressor and receiver, check the tightness of all bolts and fittings and tighten as necessary.

STEP NUMBER	PROCEDURE	REQUIREMENT	DOES CONDITION MEET REQUIREMENTS?	
			YES	NO
1.	Level unit.	Unit is properly leveled on foundation.	Go to step #2.	Level unit.
2.	Check Inlet & Discharge Piping.	Piping is of sufficient size and rating for this compressor.	Go to step #3.	STOP! Do not proceed until adequate piping has been installed.
3.	Check tightness of all tubing connections and fasteners.	All tubing connections must be secure.	Go to step #4.	STOP! Tighten all tubing connections securely.
4.	Check electrical installation.	Motor and electrical supply are compatible in voltage, phase and hertz.	Go to step #5.	STOP! Do not apply power to the motor. Correct wiring or consult a qualified electrician before continuing.
		Electrical supply has adequate ampere rating.		
		Motor is correctly wired. Wire is correct size.		
		All electrical components are correctly wired.		STOP! Do not apply power to the motor until all components are wired correctly.
5.	Check beltwheel rotation. Rotate beltwheel by hand in direction of rotation (See Figure 1).	Beltwheel rotates freely in direction of rotation. All parts are in good working condition.	Go to step #6.	STOP! Repeat Step #3.
6.	Check Automatic Condensate Drain Trap	Trap is properly primed.	Go to step #7.	Prime drain trap.
7.	Check cleanliness of area around unit.	Area on and around compressor should be free from objects that could interfere with compressor operation.	Go to paragraph on Start-Up Procedures .	Remove rags, tools, and any other objects on and around compressor.

Table 3 - Pre-start Checklist

MOTOR HP	SINGLE PHASE				THREE PHASE							
	115V		230V		200V		230V		460V		575V	
	AWG	SWG	AWG	SWG	AWG	SWG	AWG	SWG	AWG	SWG	AWG	SWG
1	12	14	14	16	14	16	14	16	14	16	14	16
1.5	10	12	14	16	14	16	14	16	14	16	14	16
2	8	10	14	16	14	16	14	16	14	16	14	16
3	8	10	12	14	14	16	14	16	14	16	14	16
5	4	6	8	10	18	12	12	14	14	16	14	16
7.5	--	--	6	8	8	10	10	12	14	16	14	16

AWG = American Wire Gauge

SWG = British Imperial Standard Wire Gauge

Table 4 - Wire Selection Guide

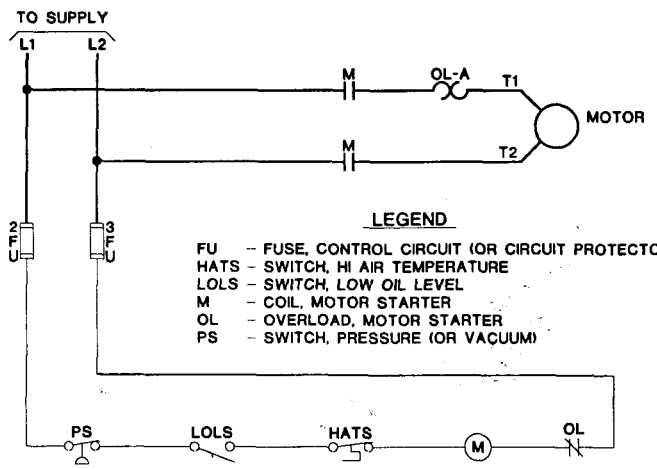

Figure 5 - Typical Single-Phase Wiring

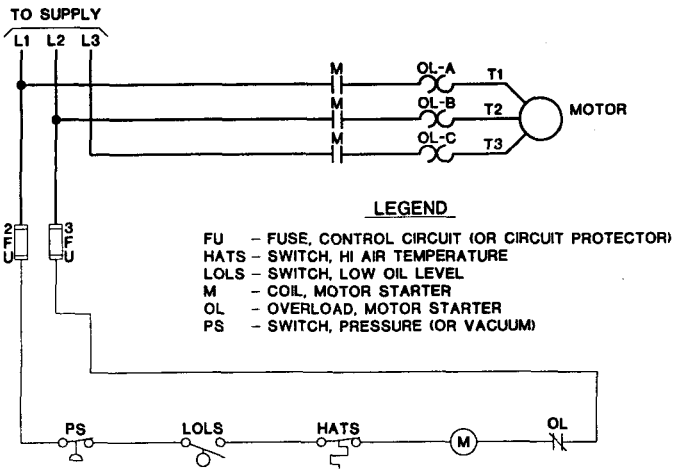

Figure 6 - Typical Three-Phase Wiring

SECTION 3 - TROUBLESHOOTING

TROUBLE	CHECKPOINT REFERENCE
Motor will not run	12, 13
Oil in discharge air	1, 4, 7, 9, 17, 18
Knocks or rattles	2, 15, 16, 18, 19, 20
Air delivery has dropped off	1, 6, 15, 17, 18
Relief valve pops	15, 24
Trips motor overload or draws excessive current	5, 12, 13, 14, 15, 18, 19, 20
Moisture in frame or rusting in cylinders	9, 10
Excessive starting and stopping	6, 11, 23
Compressor runs excessively hot	3, 8, 11,14, 15, 21
Compressor does not come up to speed	2, 12
Lights flicker or dim when compressor is running	12, 13
Abnormal piston, ring or cylinder wear	1, 4, 5, 8, 9, 22

CHECK POINT	POSSIBLE CAUSE	CORRECTIVE ACTION
1	Clogged or dirty air inlet filter.	Clean or replace filter element.
2	Loose beltwheel or motor pulley. Excessive end play in motor shaft.	Check beltwheel, motor pulley and shaft. Repair or replace as required.
3	Inadequate ventilation around beltwheel.	Relocate compressor for adequate airflow.
4	Oil viscosity too low.	Drain existing lubricant from frame. Refill with proper lubricant.
5	Oil viscosity too high.	Drain existing lubricant from frame. Refill with proper lubricant.
6	Air leaks in piping (on compressor or external piping/system).	Check tubing and connections. Repair or replace as required.
7	Oil level too high.	Drain lubricant from frame to proper level.
8	Oil level too low.	Add lubricant to frame to bring level up to acceptable point.
9	Detergent type lubricant being used.	Change to non-detergent lubricant with rust and oxidation inhibitors.

10	Extremely light duty cycles.	Run compressor for longer duty cycles.
	Compressor located in damp or humid spot.	Relocate compressor or add crankcase heaters.
11	Receiver check valve leaking.	Tighten or replace check valve.
12	Improper line voltage.	Check line voltage, change lines as required.
	Poor contact on motor terminals or starter connections.	Ensure good contact on motor terminals and starter connections.
	Improper starter heaters.	Install proper starter heaters.
13	Poor power regulation (unbalanced line).	Consult local power company.
14	V-belt is pulled too tight.	Adjust belt tension.
15	Valves leaking, broken, carbonized or loose. Air passages restricted.	Check valves. Clean or replace as required.
16	Carbon build-up on top of piston(s).	Clean piston(s). Repair or replace parts as required.
17	Piston rings damaged or worn (broken, rough, scratched, excessive end gap or side clearance).	Replace piston rings.
	Piston rings not seated, stuck in grooves, or end gaps not staggered.	Clean and adjust piston rings. Replace as required.
18	Cylinder scratched, worn or scored.	Repair or replace as required.
	Piston scratched, worn or scored.	Repair or replace as required.
19	Connecting rod, piston pin or crankpin bearings worn or scored.	Inspect all. Repair or replace as required.
20	Defective ball bearings on crankshaft or motor shaft.	Check ball bearings. Replace as required.
21	Wrong beltwheel direction of rotation.	Check motor wiring for proper connections.
22	Extremely dusty or polluted environment.	Route air inlet filter to a clean air source.
		Use heavy duty filter element
23	Excessive condensate in receiver.	Drain receiver.
24	Defective relief valve.	Replace relief valve.

Table 5 - Troubleshooting Guide

SECTION 4 - MAINTENANCE

⚠ WARNING

Compressed air has great force.
Can cause severe injury or death.

Always release pressure from the compressor and all associated tubing and components before servicing compressor.

⚠ WARNING

Hazardous voltage.
Can cause severe injury or death.

Always disconnect power supply before performing any maintenance or repair work on this compressor.

MAINTENANCE OPERATION	SERVICE INTERVAL OPERATING HOURS/MONTHS - whichever occurs first				
	500/3	1000/6	1500/9	2000/12	2500/15
COMPRESSOR					
Frame Lubricant Level - Check	Daily				
Air Inlet Filter - Inspect & Clean	Weekly				
Intercooler - Clean Exterior	Weekly				
Relief Valves - Check Manually	Weekly				
Cylinder Cooling Fins - Clean	Weekly				
Inspect Lubricant for Contamination - Change if necessary				•	
Compressor Valves - Inspect & Clean	•	•	•	•	•
V-BELT DRIVE					
Belt Tension - Check	Monthly				
MOTOR					
Clean	Monthly - (Weekly in Dusty or Polluted Environments)				
Motor Bearings - Inspect & Lubricate				•	
RECEIVER					
Drain Condensate - Manual	Daily				
Relief Valves - Check Manually	Weekly				
GENERAL					
Check for Unusual Noise/Vibration	Daily				
Check & Tighten Screws/Bolts	Monthly				
Inspect for Air Leaks	Monthly				

Table 6 - Maintenance Guide

SECTION 5 - PARTS LIST

GENERAL INFORMATION

The following is an illustrated list and description of the parts required to maintain and repair your unit. Also included is a list of Step Saver Kits which are designed for routine maintenance and repair tasks.

DESCRIPTION

The parts list contains a breakdown of the unit into assemblies, subassemblies and detail parts. Each assembly is followed by its subassemblies and component parts, which are indented with "bullet" symbols to show the relationship to the next higher assembly. Assemblies which are broken down in separate lists and illustrations list the appropriate figure number and page reference after the item description.

EXPLANATION OF COLUMNS

Each parts list is divided into the following columns:

REFERENCE NUMBER (REF. NBR.)

Each illustration is accompanied by the list of parts, either on the same page or on consecutive pages. This column lists the figure number for the illustration, followed by the call-out number on the illustration which identifies that item. The reference number is usually not required for ordering parts or kits.

The following abbreviations might be used in the Reference Number column:

NI = Not Illustrated.

REF = Reference Only. You may be referred to a Figure and Page noted in the Description Column.

PART NUMBER

All items listed in this section bear Ingersoll-Rand part numbers, which are listed in this column. The part number must always be specified when ordering spare or replacement parts.

The following abbreviations might be used in the Part Number column:

NSS = Not Sold Separately. Such items must be ordered as part of the next higher assembly; or, where applicable, as part of a Step Saver Kit.

* * = Part Number will vary. Specify the compressor discharge pressure and complete motor nameplate data when ordering.

DESCRIPTION

The description column identifies items by standard name, or nomenclature, and modifiers. The modifiers are used to identify specific characteristics (i.e., dimensions, capacity, pressure setting, etc.), and/or the particular location or function on this unit. The relationship of a subassembly or component part to higher assemblies is shown by indentation and bullet symbols. Always provide the part description when ordering.

QUANTITY (QTY.)

Quantities listed in this column reflect the number of each item used in the next higher assembly, and are not necessarily the total quantity of the part in complete model. Specify desired quantity when ordering.

SPARES

Quantities under this heading reflect the number of each item which we recommend be kept on hand for maintenance or repair. The appropriate quantity for your application will depend on how critical interruptions in service are to your operation.

1). Class 1 - Minimum. Recommended quantity for Domestic Service where interruptions in service are not important.

2). Class 2 - Average. Suggested quantity for Domestic Service where some interruptions in continuity of service are not objectionable.

3). Class 3 - Maximum. Suggested for Export Service or for Domestic Service where interruptions in service are objectionable.

STEP SAVER KITS

Step Saver Kits for your unit are listed on page 12. These kits provide all of the parts you will need to perform common repair or scheduled maintenance tasks, such as piston ring replacement or valve replacement. The reference numbers listed in the Contents column reflect the parts included in each kit, and correspond to the reference numbers for the parts as they appear throughout this manual. The quantity of each item included in the kits is the same as that listed for the item under the given reference number. When ordering the kits below, use the Description and Part Number as shown.

ORDERING INSTRUCTIONS

All parts listed in this section can be ordered through your local Ingersoll-Rand Air Center or Full Service Distributor. Consult the Directory of Distributors included with the air compressor to find the distributor in your area.

When ordering, always provide the following information:

1). The MODEL NUMBER and SERIAL NUMBER stamped on the compressor nameplate.

2). The FORM NUMBER of this manual, as listed in the lower right-hand corner on the front cover.

3). The QUANTITY, DESCRIPTION & PART NUMBER of the part(s) you are ordering.

Refer to the example on the inside back cover of this manual.

STEP SAVER KITS

PART NUMBER	DESCRIPTION	CONTENTS (BY REF. NBR.)
32301509	KIT, BEARING/CON. ROD	7-4, 7-6, 7-9, 7-13
32171464	KIT, FILTER	12-14
32301517	KIT, RING/GASKET	7-15, 7-20, 7-23, 7-24, 7-30, 11-5, 11-6, 11-18
32301426	KIT, VALVE/GASKET	11-10, 11-12, 11-20, 11-22, 8-2, 8-3, 8-4, 8-5, 8-6, 8-7, 8-8, 9-2, 9-3, 9-4, 9-5, 9-6, 9-7, 9-8
32301434	SET, GASKET	7-15, 7-20, 7-24, 7-30, 11-6, 11-10, 11-12, 11-20, 11-22

REF. NBR.	PART NUMBER	DESCRIPTION	QTY.	SPARES		
				1	2	3
7-1	32247728	FRAME, COMPRESSOR	1			
7-2	32293565	ASSEMBLY, CRANKSHAFT - COMPLETE	1			
7-3	NSS	• ASSEMBLY, DISK & SHAFT	1			
7-4	32248122	• BEARING, BALL	1			
7-5	32006496	• SPACER, CRANKSHAFT BEARING	1			
7-6	95213666	• BEARING, BALL - WITH SNAP RING	1			
7-7	37127669	• RING, BEARING RETAINER	1			
7-8	95433173	• KEY, WOODRUFF	1			
7-9	30210199	• BUSHING, CRANKPIN	1			
7-10	30210298	CAP, CRANKPIN	1			
7-11	30278667	CAPSCREW - 3/8-16 x 7/8"	2			
7-12	90799289	LOCKWIRE - 12 GA x 5"	1			
7-13	32004152	ROD, CONNECTING	2			
7-14	32247751	COVER, FRAME END	1			
7-15	32247884	GASKET, FRAME END COVER	1	1	1	2
7-16	95105250	CAPSCREW, HEX - 5/16-18 x 1"	12			
7-17	95674651	GASKET, COPPER WASHER - 5/16"	8			
7-18	32279549	PLUG, OIL FILLER - COMPLETE	1			
7-19	NSS	• PLUG, OIL FILLER	1			
7-20	32247850	• O-RING, OIL FILLER PLUG	1	1	1	2
7-21	32247793	ASSEMBLY, SHAFT END COVER	1			
7-22	NSS	• COVER, SHAFT END	1			
7-23	32204539	• SEAL, OIL - VITON	1		1	2
7-24	32247876	GASKET, SHAFT END COVER	1	1	1	2
7-25	32157349	BRACKET, INTERCOOLER CLAMP	1			
7-26	32247801	BELTWHEEL - ELECTRIC DRIVE	1			
7-27	95081808	LOCKWASHER, SPRING - 3/4"	1			
7-28	95076816	NUT, HEX - 1/2-13 x 3/4"	1			
7-29	95053526	CAPSCREW, HEX - 1/2-13 x 3/4"	1			
7-30	95674701	GASKET, COPPER	1			

REF. NBR.	PART NUMBER	DESCRIPTION	QTY.	SPARES		
				1	2	3
REF.	32295487	ASSEMBLY, VALVE PLATE - HIGH PRESSURE	1		1	1
8-1	NSS	• PLATE, VALVE - HIGH PRESSURE	1			
8-2	32236671	• VALVE, FINGER - INLET	1	1	1	2
8-3	32236747	• RETAINER, FINGER VALVE - INLET	1			
8-4	32247504	• SCREW, HEX HEAD - M3 x 12	2			
8-5	97511059	• NUT, HEX - M3 WITH LOCKWASHER	2			
8-6	32295461	• RETAINER, FINGER VALVE - DISCHARGE	1			
8-7	32241010	• VALVE, FINGER - DISCHARGE	1	1	1	2
8-8	32295479	• VALVE, DAMPER - DISCHARGE	1			
REF.	32248205	ASSEMBLY, VALVE PLATE	1		1	1
9-1	NSS	• PLATE, VALVE - LOW PRESSURE	1			
9-2	32248130	• VALVE, FINGER - INLET	1	1	1	2
9-3	32248148	• RETAINER, FINGER VALVE - INLET	1			
9-4	32247512	• SCREW, HEX HEAD - M4 x 12	6			
9-5	32248171	• NUT, HEX - M4 WITH LOCKWASHER	6			
9-6	32248155	• VALVE, FINGER - DISCHARGE	1	1	1	2
9-7	32294464	• VALVE, DAMPER - DISCHARGE	1			
9-8	32248163	• VALVE, RETAINER - DISCHARGE	1			

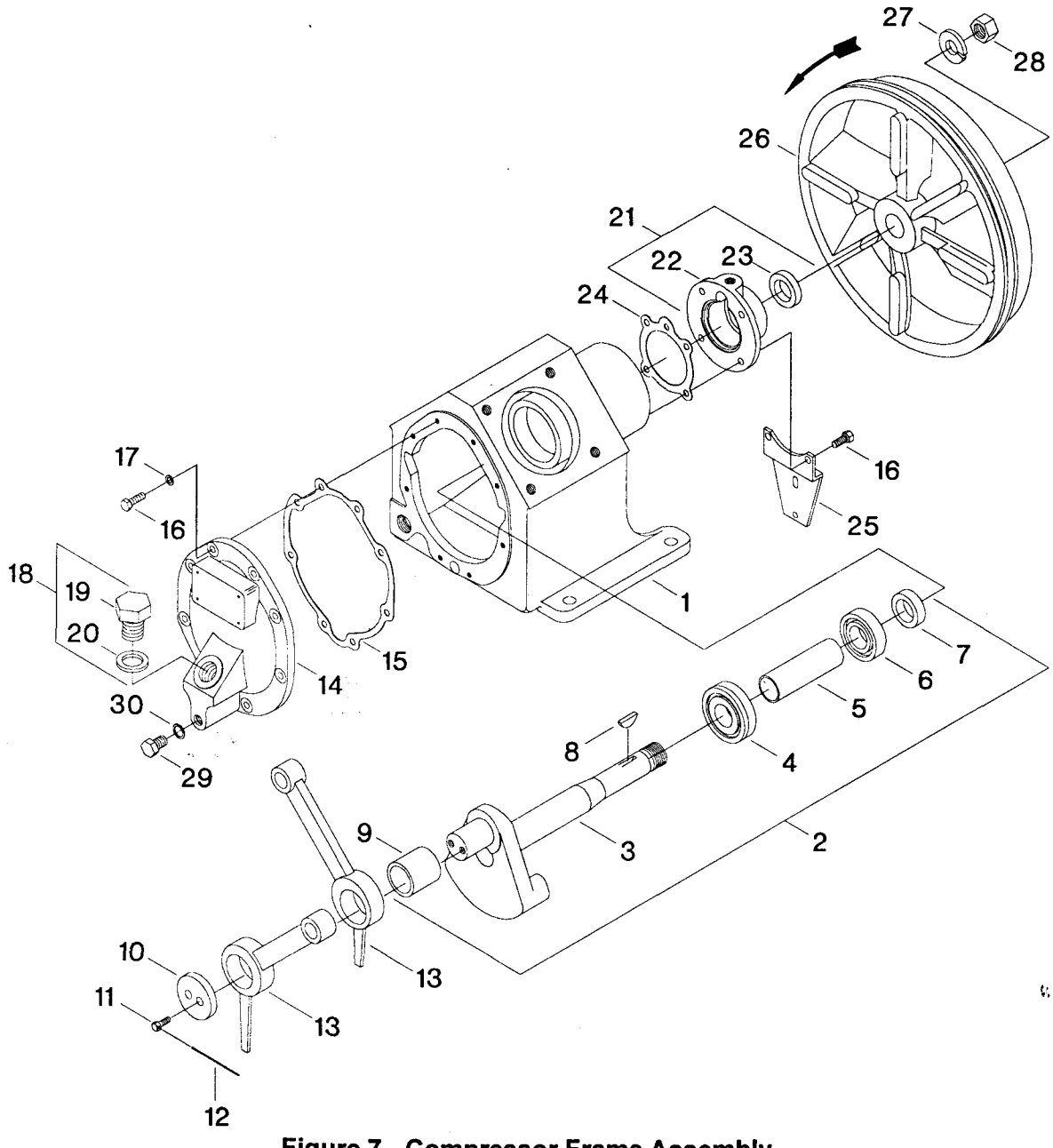

Figure 7 - Compressor Frame Assembly

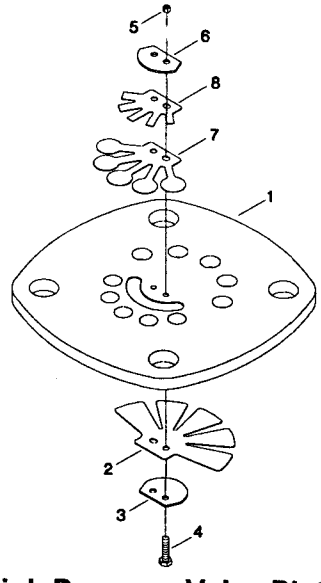

Figure 8 - High Pressure Valve Plate Assembly

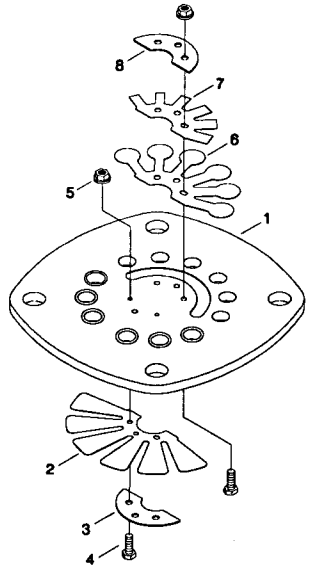

Figure 9 - Low Pressure Valve Plate Assembly

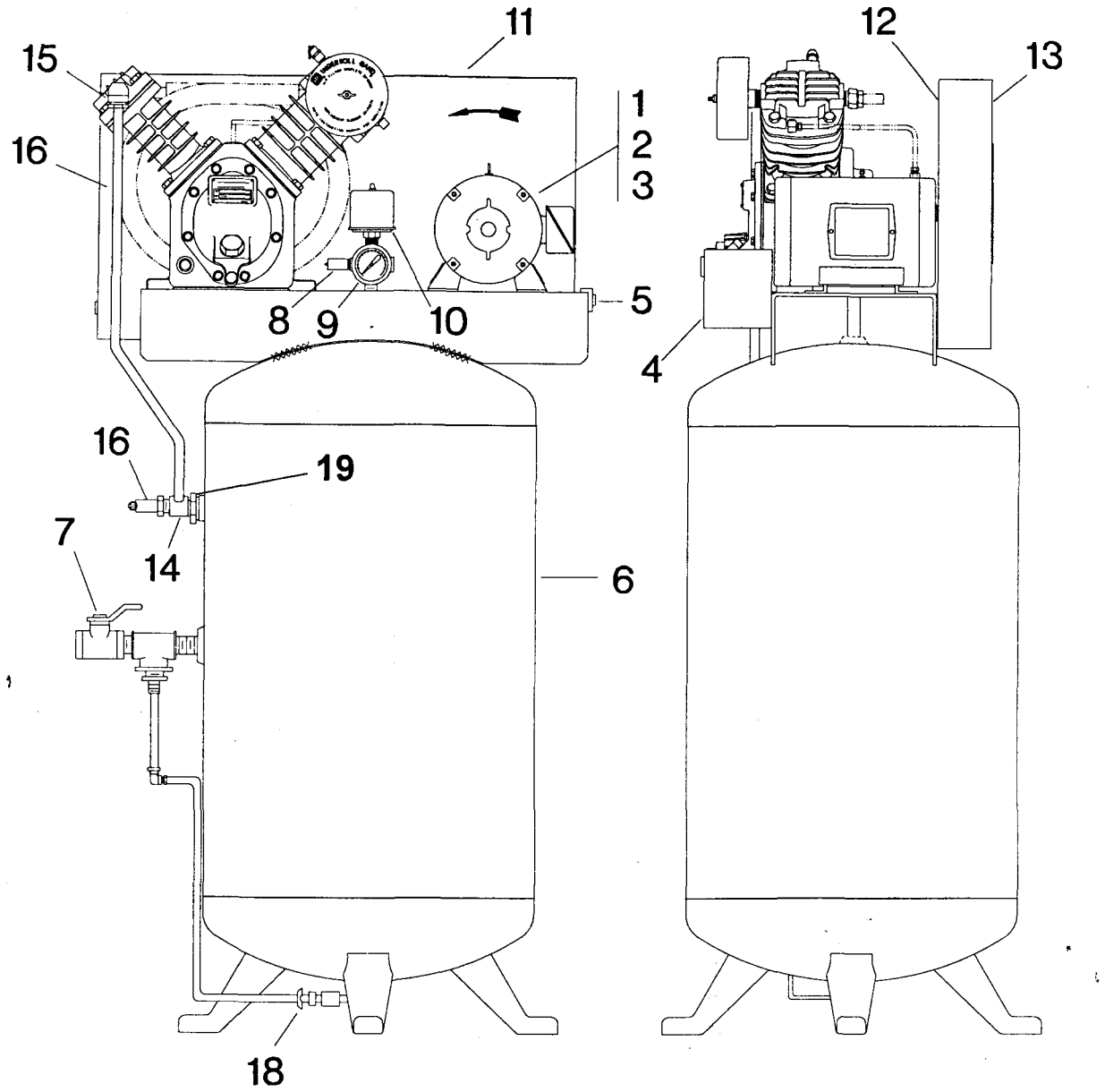

Figure 10 - Typical Vertical Package

REF. NBR.	PART NUMBER	DESCRIPTION	QTY.	SPARES		
				1	2	3
10-1	**	MOTOR, ELECTRIC	1			
10-2	**	SET, SHEAVE	1			
10-3	**	BELT, V	2		2	2
10-4	**	STARTER, MOTOR	1			
10-5	32277220	ASSEMBLY, BELT TIGHTENER	1			
10-6	32300980	ASSEMBLY, RECEIVER - 80 GALLON	1			
10-7	32223596	ASSEMBLY, BALL VALVE - 3/4" (SERVICE VALVE)	1			1
10-8	31385693	VALVE, RELIEF	1			1
10-9	32013872	GAUGE, PRESSURE - 300 PSIG	1	1	1	1
10-10	32147738	SWITCH, PRESSURE - NEMA 1 - 175 PSIG	1	1	1	1
10-11	32281099	GROUP, BELTGUARD - COMPLETE	1			
10-12	32281040	• BACK, BELTGUARD	1			
10-13	32281032	• COVER, BELTGUARD	1			
10-14	32145088	ELBOW, TUBE - 3/4 x 3/4"	1			
10-15	95031779	ELBOW, TUBE - 3/4 x 1/2"	1			
10-16	32301400	ASSEMBLY, TUBE - COMPRESSOR/RECEIVER	1			
10-17	32174286	VALVE, RELIEF - 325 PSIG - DISCHARGE	1			1
10-18	32027120	VALVE, MANUAL DRAIN	1			
10-19	32283418	VALVE, CHECK	1			

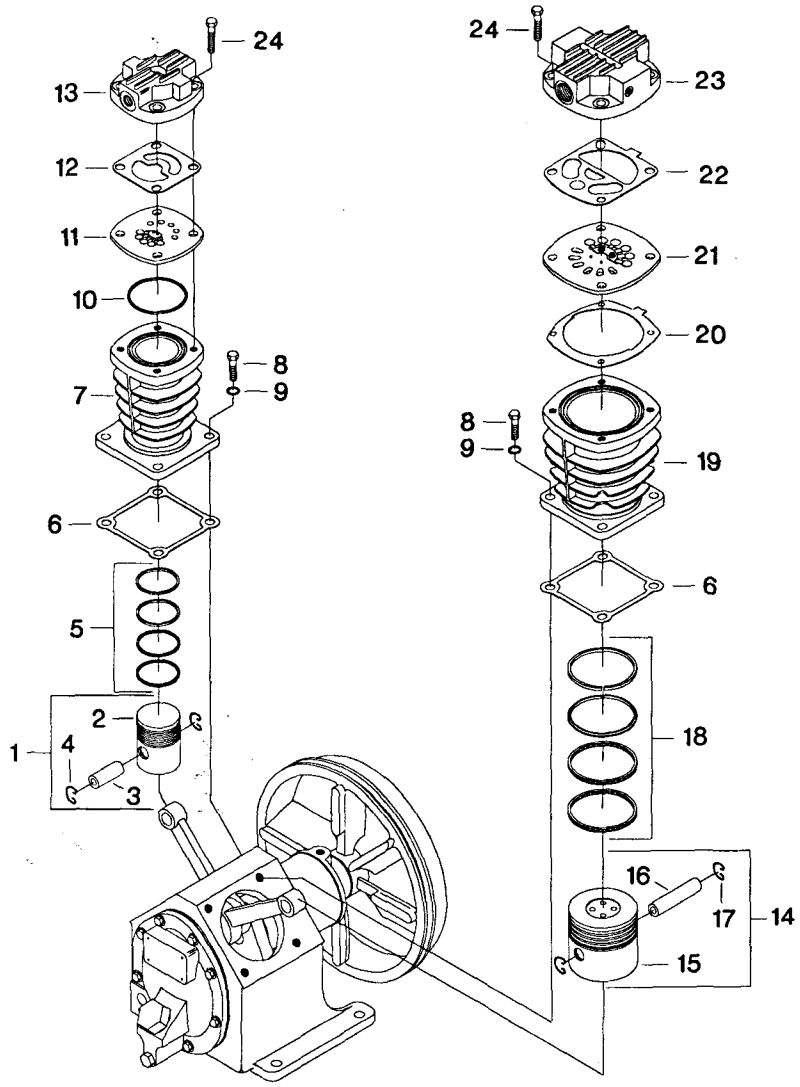

Figure 11 - Model 2475 Bare Compressor

REF. NBR.	PART NUMBER	DESCRIPTION	QTY.	SPARES		
				1	2	3
11-1	32293532	PISTON, AIR - COMPLETE - 2.5" - HIGH PRESSURE	1		1	1
11-2	NSS	• PISTON, AIR - 2.5"	1			
11-3	30287783	• PIN, PISTON	1			
11-4	30298020	• RING, LOCK	2			
11-5	32198368	SET, PISTON RING - 2.5"	1	1	1	2
11-6	32247868	GASKET, CYLINDER/FLANGE	2	2	2	4
11-7	32247652	CYLINDER - 2.5" - HIGH PRESSURE	1			
11-8	95053567	CAPSCREW, HEX - 1/2-13 x 1-1/4"	8			
11-9	95674701	GASKET, COPPER - 1/2"	8			
11-10	32247462	O-RING, VALVE PLATE - HIGH PRESSURE	1	1	1	2
11-11	32295487	ASSEMBLY, VALVE PLATE - HIGH PRESSURE (SEE FIGURE 8)	1		1	1
11-12	32247926	GASKET, AIRHEAD - HIGH PRESSURE	1	1	1	2
11-13	32247827	AIRHEAD - HIGH PRESSURE	1			
11-14	32293516	PISTON, AIR - COMPLETE - 4" - LOW PRESSURE	1		1	1
11-15	NSS	• PISTON, AIR - 4"	1			
11-16	30288393	• PIN, PISTON	1			
11-17	30298020	• RING, LOCK	2			
11-18	32194151	SET, PISTON RING - 4"	1	1	1	2
11-19	32293540	CYLINDER - 4" - LOW PRESSURE	1			
11-20	32248197	GASKET, VALVE PLATE - LOW PRESSURE	1	1	1	2
11-21	32248205	ASSEMBLY, VALVE PLATE - LOW PRESSURE (SEE FIGURE 9)	1		1	1
11-22	32248189	GASKET, AIRHEAD - LOW PRESSURE	1	1	1	2
11-23	32293557	AIRHEAD - LOW PRESSURE	1			
11-24	95104188	CAPSCREW, HEX - 1/2-13 x 1-3/4"	8			

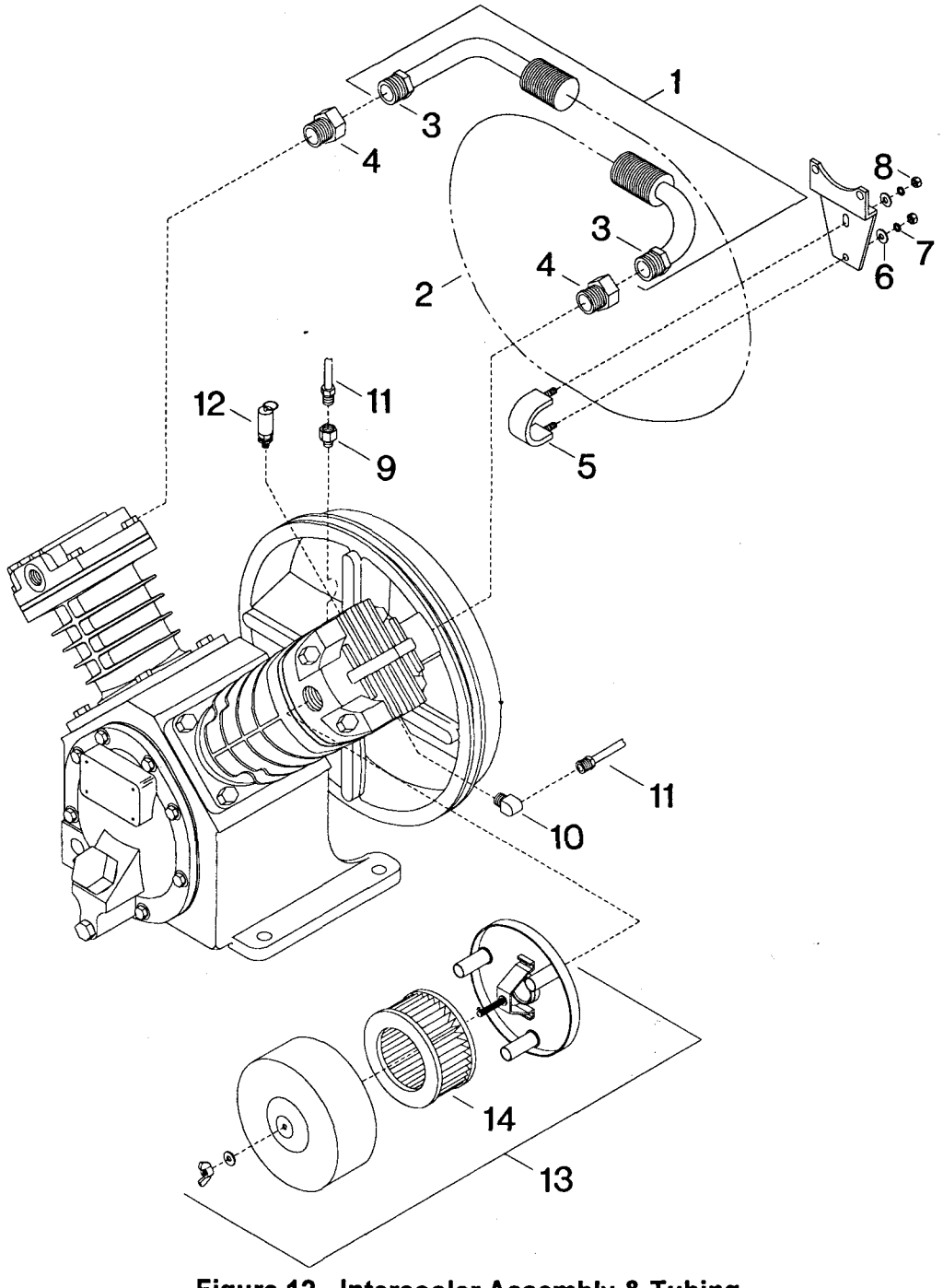

Figure 12 - Intercooler Assembly & Tubing

REF. NBR.	PART NUMBER	DESCRIPTION	QTY.	SPARES		
				1	2	3
12-1	32295453	ASSEMBLY, INTERCOOLER	1		1	1
12-2	32295446	• INTERCOOLER	1			
12-3	95108577	• NUT, TUBE - 3/4"	2			
12-4	95083275	CONNECTOR, TUBE - 3/4 x 3/4"	2			
12-5	32247942	CLAMP, INTERCOOLER	1			
12-6	95094298	WASHER, FLAT - 1/4"	2			
12-7	32035479	LOCKWASHER, SPRING - 1/4"	2			
12-8	95416335	NUT, HEX - 1/4 -20	2			
12-9	95082483	CONNECTOR, TUBE - 5/16 x 1/8"	1			
12-10	95031860	ELBOW, TUBE - 5/16 x 1/8"	1			
12-11	32247892	ASSEMBLY, TUBE - BREATHER	1			
12-12	72062151	VALVE, RELIEF - 60 PSIG	1			
12-13	32170953	FILTER, INLET - COMPLETE	1		1	2
12-14	32170979	• ELEMENT, FILTER - 10 MICRON	1	1	1	1

NOTICE

THE USE OF REPAIR PARTS OTHER THAN THOSE INCLUDED WITHIN THE INGERSOLL-RAND COMPANY APPROVED PARTS LIST MAY CREATE UNSAFE CONDITIONS OR MECHANICAL FAILURES OVER WHICH INGERSOLL-RAND COMPANY HAS NO CONTROL. INGERSOLL-RAND COMPANY SHALL BEAR NO RESPONSIBILITY FOR EQUIPMENT ON WHICH NON-APPROVED REPAIRS PARTS ARE INSTALLED.

The manufacturer reserves the right to make changes or add improvements without notice and without incurring any obligation to make such changes or add such improvements to products previously sold.

GLOSSARY

GROUP ASSEMBLY PARTS LIST

Parts are listed in disassembly sequence, where applicable. Each assembly is broken down into subassemblies and detail parts. which are indented with "bullet" (•) symbols in the DESCRIPTION column to indicate the relationship to the next higher assembly. For example:

Assemblies and Detail Parts
- Attaching Parts for Assemblies and Detail Parts
- • Subassemblies
- • Attaching Parts of Subassemblies
- • • Detail Parts for Subassemblies, etc.

REFERENCE NUMBER COLUMN

The reference number is the number assigned to the part in the listing. The reference number corresponds to the item on the associated illustration. Where applicable, the following abbreviations might in this column:

NI	Not Illustrated
REF	Reference Only. Refer to the Figure and Page noted in the DESCRIPTION column.

PART NUMBER COLUMN

All numbers listed in this column are Ingersoll-Rand part numbers, and must be specified when ordering replacement parts. The following abbreviations appear in this column:

NA	Not Applicable. This abbreviation indicates items which are not used on particular models or packages.
NSS	Not Sold Separately. These items must be ordered under the next higher assembly; or, where applicable, as part of a step saver kit.
*	Consumable Materials (lubricants, sealants, etc.). Purchase directly from local Ingersoll-Rand Air Center or Full Service Distributor.
**	Part Number Varies. Specify the compressor bare speed and complete nameplate data when ordering.

DESCRIPTION COLUMN

The description column identifies the item by standard name followed by modifiers. The modifiers identify specific characteristics (i.e. dimensions, capacity, pressure setting, etc.), and/or the particular location or function on the compressor. Always include the description when ordering replacement parts or kits.

QUANTITY PER ASSEMBLY COLUMN

Quantities listed in this column reflect the number used in the next higher assembly, and are not necessarily the total quantity of the part used in the complete package. Specify the desired quantity when ordering replacement parts.

HOW TO SELECT RECOMMENDED SPARES

Quantities listed in the RECOMMENDED SPARES column reflect the number of each item which we recommend be kept on hand for maintenance or repair. The appropriate quantity for your application will depend on how critical interruptions in service are to your operation. Recommended spares are divided into three classes:

CLASS 1	MINIMUM. Recommended quantity for Domestic Service where interruptions in service are not important.
CLASS 2	AVERAGE. Recommended quantity for Domestic Service where interruptions in continuity of service are not objectionable.
CLASS 3	MAXIMUM. Recommended quantity for International or Domestic Service where interruptions in service are not acceptable.

STEP SAVER KITS

Step Saver Kits are available for all Type 30 compressor models. These kits are designed to provide all of the parts you will need to perform routine maintenance and repair tasks. A list of available Step Saver Kits is included in the Parts List manual which came with your compressor. When ordering Step Saver Kits, please follow the instructions set out below for ordering replacement parts.

ORDERING INSTRUCTIONS

All parts listed in the Part List manual for your compressor are available through your local Ingersoll-Rand Air Center or Full Service Distributor. Consult the Directory of Distributors included with your compressor to locate the distributor in your area.

HOW TO ORDER COMPRESSOR PARTS

When ordering replacement parts or Step Saver Kits, please specify:

1. The MODEL and SERIAL NUMBER as stamped on the Compressor Nameplate.
2. The FORM NUMBER of the Parts List Manual, as shown on the lower right-hand corner of the front cover.
3. The QUANTITY, DESCRIPTION and PART NUMBER exactly as listed.

EXAMPLE

Send the following parts for Model	**7100**
Serial Number	**T30000000**
Literature Form Number	**SCD-478A**
1 Switch, Pressure - NEMA 1	**37005907**
1 Element, Filter	**32012957**
1 Gauge, Pressure	**32013872**

Look What
INGERSOLL-RAND
Can Do For YOU...

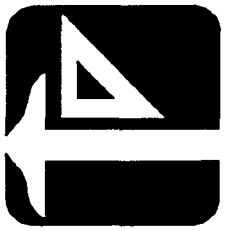

SPECIAL ENGINEERING SERVICE
We can help you to identify and solve your compressed air problems by evaluating your needs and recommending the proper compressor and air piping system to give you maximum efficiency.

EFFICIENT FIELD SERVICE
We maintain a highly trained staff of technicians to service your equipment for preventive maintenance, or to assist you should emergencies ever occur.

SPARE PARTS
By stocking genuine I-R spare parts, we can help you avoid costly delays, or substituting inferior parts. Using genuine I-R parts on your I-R equipment will help to keep even older machines running in good-as-new condition.

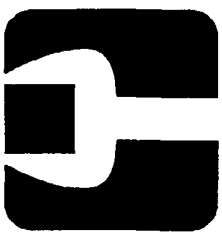

COMPLETE REPAIR SERVICE
Our trained technicians will repair or overhaul your equipment to factory specifications, using only genuine I-R parts.

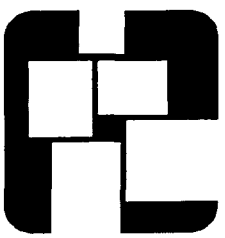

COMPLETE STOCK OF EQUIPMENT
We carry a complete line a I-R equipment and accessories designed to meet any compressed air application. We are backed by Ingersoll-Rand's prompt factory shipment to ensure you on-time delivery.

A SUBSTITUTE IS NOT A REPLACEMENT

Ensure you get peak performance and longevity out of your compressor by insisting on genuine Ingersoll-Rand replacement parts and maintenance kits. Not only are they made to precise dimensions and OEM-specified metalurgy, but each part is backed by the Ingersoll-Rand warranty. Your local Air Center, Full-Service Distributor or direct Ingersoll-Rand salesperson will work with you to ensure you get the parts you need to do the job right. Equip your machines with only the best -

INGERSOLL-RAND GENUINE PARTS.

DISTRIBUTED BY

INGERSOLL-RAND COMPANY
Small Compressor Division
Campbellsville, KY 42718

© 1993 INGERSOLL-RAND COMPANY

Printed in the U.S.A.

INGERSOLL-RAND®

TECHNICAL MANUAL SUPPLEMENT

T30

Small Compressor Division
INGERSOLL-RAND COMPANY
Campbellsville, KY 47218

LOW OIL LEVEL SWITCH

PART NUMBER 32276313

⚠ WARNING

Compressed Air Has Great Force.

Can Cause Severe Injury or Death.

Always release air pressure from the compressor, air receiver and associated tubing and components before servicing this compressor.

⚠ WARNING

Hazardous Voltage.

Can Cause Severe Injury or Death.

Always disconnect power supply before performing any maintenance or repair work on this compressor.

1. PURPOSE.

The purpose of this publication is to provide maintenance and parts list information regarding the latest design improvements on your Ingersoll-Rand air compressor. The information contained herein has not yet been incorporated in the Instruction and Parts List Manuals provided with your compressor.

2. SCOPE.

This supplement is applicable to all Type 30 (T30) air compressors manufactured after April 1, 1994. Depending on the air compressor purchased, the Low Oil Level Switch is available as either standard or optional equipment.

3. PRECEDENCE.

The maintenance procedures contained in Paragraph 6 supersede the corresponding data in the Instruction Manual supplied with your air compressor. When ordering spare or replacement parts, the part numbers listed in Paragraph 8 should be used in place of those shown in the Parts List. This publication, along with the Instruction Manual and Parts List should be kept in a location which is accessible to operation and maintenance personnel.

4. DESCRIPTION.

A properly functioning Low Oil Level Switch is critical to the operation of your compressor. Operating the compressor with a defective switch can cause extensive damage should the frame oil level drop to an unsafe point undetected. The switch is a single-pole, double-throw device, and is NEMA 4 rated. Switch data is listed in Table 1.

The low oil level switch does not alleviate the need to check the frame oil level in your compressor on a regular basis (Refer to the SCHEDULED MAINTENANCE table in your Instruction Manual). Ingersoll-Rand Company cannot assume responsibility for any damage which might occur as the result of operating the compressor without adequate lubrication.

AMPS	VOLTAGE
0.4	575 VAC PILOT DUTY
1/4	250 VDC - NON-INDUCTIVE
1/2	125 VDC - NON-INDUCTIVE
3-1/2	24 VDC - NON-INDUCTIVE
10	125, 250, 480 VAC

TABLE 1. SWITCH DATA.

5. OPERATION.

If the oil level in the compressor frame reaches an unsafe level, the float will cause the switch contacts to open and shut down the unit. When the proper lubricant level has been restored, the float will reset to its original position, closing the switch contacts. The compressor can then be restarted.

6. MAINTENANCE.

Under normal operation, the low oil level switch requires no operator intervention or routine maintenance. If the switch fails, as evidenced by frequently shutting off the motor, or failing to shut off the motor if the oil level drops to an unsafe point, it should be removed and

© 1994 Ingersoll-Rand Company
Printed in the U.S.A.

FORM SCD-599
March 1994

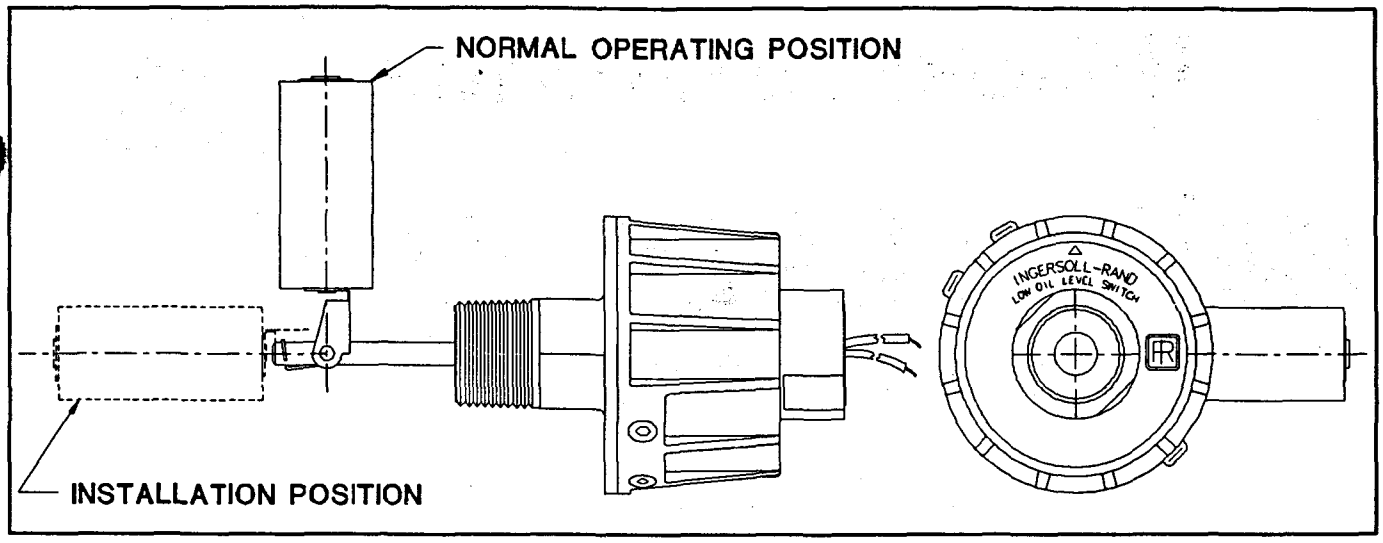

FIGURE 1. SWITCH ALIGNMENT.

checked immediately. A defective switch must be replaced.

A. REMOVAL. (**NOTE**: Frame end cover removal is not required to remove the low oil level switch).

1). Disconnect the main power supply and drain the oil from the frame (refer to your Instruction Manual for oil change procedures).
2). Disconnect the switch wires from the control circuit.
3). Loosen the three set screws and remove the switch cover.
4). Remove the switch body from the compressor frame. (**NOTE:** If the switch is to be removed from the compressor for an extended period of time, install a 3/4" NPT plug into the frame opening to keep dust and dirt out of the frame).

B. CLEANING. Thoroughly clean the float with a dry rag. If necessary, a non-flammable solvent can be used provided the float is wiped clean before the switch is reinstalled.

C. TESTING. The switch can be tested with a standard 12-volt automotive test light.

1). Align the cover on the switch body as shown in Figure 1.
2). Hold the float up so that the contact rod and cover do not make contact. The test light should be on.
3). Release the float. When the rod and cover make contact, the test light should go off.

D. INSTALLATION.

1). With the switch cover removed, apply pipe thread sealant to the switch threads.
2). With the float extended straight out, insert the switch body into the frame and tighten. When properly installed, the switch should be aligned as illustrated in Figures 1 and 2.
3). Hold the contact rod straight up at a 90° angle. Install the switch cover with the arrow pointing straight up at a 90° angle.
4). Carefully and evenly tighten the three set screws to secure the cover to the switch body, using caution not to over-tighten and damage the switch. The set screws should be torqued to 24-32 In. Oz.
5). Connect the switch wires to the control circuit. (Refer to your Instruction Manual).
6). Fill the compressor frame with lubricant. (Refer to your Instruction Manual).

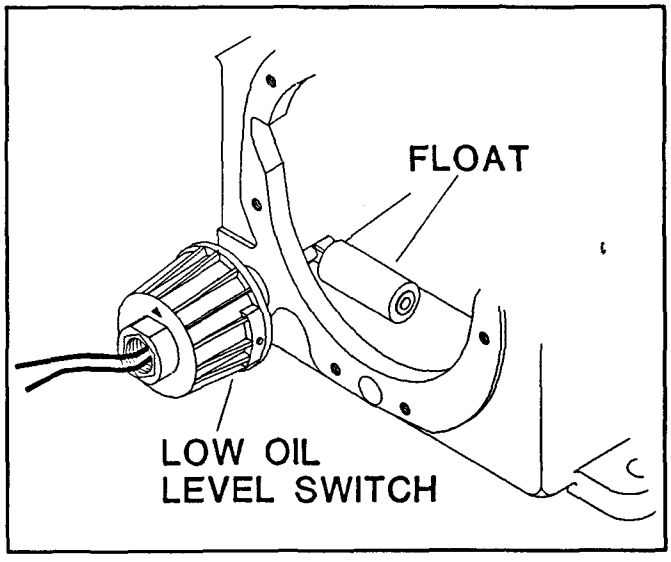

FIGURE 2. SWITCH INSTALLATION.

7. PARTS LIST DATA.

Should it ever be necessary to replace the switch, supply the information in Table 2. when ordering.

PART NBR.	DESCRIPTION
32276313	SWITCH, LOW OIL LEVEL

TABLE 2. PARTS LIST DATA.

DIRECTORY

OF

FULL SERVICE

DISTRIBUTORS

INGERSOLL-RAND®

SMALL COMPRESSOR

REFER ALL COMMUNICATIONS TO THE NEAREST INGERSOLL-RAND FULL SERVICE DISTRIBUTOR.

Form SCD-090P
August 1992

ALABAMA

Birmingham	I-R Air Center 205-822-5530
Mobile	Sandair Corp. 205-478-8467

ALASKA

Anchorage	Construction Machinery, Inc. 907-563-3822
Juneau	Construction Machinery, Inc. 907-780-4030
Ward Cove	Construction Machinery, Inc. 907-247-2228

ARIZONA

Phoenix	Pioneer Equipment 602-437-4312

ARKANSAS

Little Rock	Process & Power, Inc. 501-897-5228
Springdale	Process & Power, Inc. 501-751-8252

CALIFORNIA

City of Industry	Arnel Compressor Co. 818-968-3836
Emeryville	Power Machine 510-658-9661 800-443-4460
Los Angeles	Osterbauer Compressor Service 213-583-4771
	U.S. Equipment Co. 213-733-4733
Oakdale	Power Machine 209-847-7062 800-833-0707
Rancho Cucamonga	Osterbauer Compressor Service 714-980-8606
San Diego	Carlson & Beauloye 619-234-2256
	Osterbauer Compressor Service 619-278-9980
San Jose	Power Machine 408-365-8700
San Leandro	Voegtly & White 510-569-2700
Santa Ana	Industrial Air Compressors 714-751-3165
Santa Rosa	Arnel Compressor Co. 707-578-1253
Visalia	Continental Air Power 209-734-8665

COLORADO

Denver	Cate Colorado Equipment Co. 303-399-1585

CONNECTICUT

Hartford	Air Compressor Engineering Co. 203-246-6670
Milford	Air Compressor Engineering Co. 203-878-6531

DELAWARE

	Carey Machinery & Supply 301-485-2323

DISTRICT OF COLUMBIA

	Carey Machinery & Supply 800-492-7222

FLORIDA

Jacksonville	Air Centers of Florida 904-448-0045 800-852-0155
Miami (North) Beach	Arle Compressor Systems 305-888-8978
Orlando	Air Centers of Florida 407-677-4200 800-423-8562
Tampa	Air Centers of Florida 813-621-9671 800-282-5359

GEORGIA

Atlanta/ Forest Park	I-R Air Center 404-366-5488

HAWAII

Honolulu	Gellert Co. 808-847-2695

IDAHO

Boise	Idaho Bit & Steel 208-336-8570
Pocatello	Cate-Idaho Equipment Co. 208-232-7001

ILLINOIS

Chicago/ Elmhurst	I-R Air Center 708-530-3800
Moline	A.L.L. Equipment 309-762-8096
Peoria	Portable Tool Sales & Service 309-692-4070
South Holland	Portable Tool Sales & Service 708-333-0800
Springfield	Portable Tool Sales & Service 217-789-0351

INDIANA

Goshen	I-R Air Center 219-533-2121

INDIANA (Continued)

Indianapolis	I-R Air Center 317-875-7014

IOWA

Cedar Rapids	Iowa Machinery & Supply Co. 319-366-6431
Des Moines	Iowa Machinery & Supply Co. 515-288-0123
Waterloo	Iowa Machinery & Supply Co. 319-235-7035

KENTUCKY

Louisville	Air Systems, Inc. 502-452-6312

LOUISIANA

Baton Rouge	Sandair Corp. 504-293-0500
Houma	Sandair Corp. 504-868-6544
Kenner/ St.Rosa	Sandair Corp. 504-469-5493
Lafayette	Sandair Corp. 318-233-0501
	Sandair Corp. 205-478-8467
Shreveport	Sandair Corp. 318-688-4444

MAINE

South Portland	Trask-DeCrow Machinery, Inc. 207-799-1538

MARYLAND

Baltimore	Carey Machinery & Supply 410-485-2323 800-492-7222

MASSACHUSETTS

Boston/ Randolph	I-R Air Center 617-961-2063 800-649-AIR1(Mass.)
Northborough	Hope Air Systems 508-393-7660
Westfield	Air Compressor Engrg. Co. 413-568-2884

MICHIGAN

Detroit/ Southfield	I-R Air Center 313-353-3400
Grand Rapids/ Ada	I-R Air Center 616-676-9114

MINNESOTA

Minneapolis	Air Power Equipment 612-522-7000

MISSISSIPPI

Jackson	Sandair MS 601-948-6565
Tupelo	Process & Power, Inc. 601-844-7083

MISSOURI

St. Louis	John Henry Foster Co. 314-427-0600
Kansas City	I-R Air Center 816-921-7000

NEBRASKA

Omaha	I-R Air Center 402-330-5831

NEVADA

Las Vagas	Inquipco 702-644-1700
Sparks	Inquipco 702-356-8101

NEW JERSEY

Edison	I-R Air Center 908-225-2400
Pennsauken	I-R Air Center 609-665-3923

NEW YORK

Buffalo/ Tonawanda	I-R Air Center 716-693-7776
Clifton Park	Air Compressor Engineering Co. 518-371-4401
Long Island/ Wantagh	K & G Electric 516-221-1171
New York City/ Bronx/Metro New York	Byrne Compressed Air Eqpt. Co. 212-292-7726 800-292-2909
Syracuse (East)	I-R Air Center 315-434-9040

NORTH CAROLINA

Charlotte	Air Components & Systems 704-394-8709
Greensboro/ Kernersville	I-R Air Center 919-996-2932

NORTH DAKOTA

	Air Power Equipment Co. 612-522-7000

OHIO

Canton	Air Power of Ohio 216-455-8925

OHIO (Continued)

Cincinnati	I-R Air Center 513-771-6014
Cleveland	Air Power of Ohio 216-447-9190
Columbus	Air Power of Ohio 614-497-4001
Youngstown	Air Power of Ohio 216-759-8282

OKLAHOMA

Duncan	Duncan Equipment 405-255-1216
Oklahoma City	Duncan Equipment 405-947-0931
Tulsa	Duncan Equipment 918-663-3252

OREGON

Portland	I-R Equipment Sales 503-232-0151
	Portland Compressor 503-235-0200

PENNSYLVANIA

Allentown/ Lehigh Valley	Taylor Air Center 215-264-5431
Erie	Corgren, Inc. 814-453-5691
Harrisburg/ New Cumberland	I-R Equipment Sales 717-938-1441
Pittsburgh/ Ambridge	Total Equipment 412-266-1171
Scranton/ Chinchilla	Smith Air Center 717-587-4777
Wilkes Barre/ Plains	Taylor Air Center 717-825-6436

RHODE ISLAND

	I-R Air Center 401-272-3320

SOUTH CAROLINA

Greenville	Air Centers of South Carolina 803-848-9670 803-297-1783

SOUTH DAKOTA

	Air Power Equipment Co. 612-522-7000

TENNESSEE

Chattanooga	I-R Air Center 615-855-0383
Jackson	Process & Power, Inc. 901-668-3033
Knoxville	Air Components & Systems 615-938-2275
Memphis	Process & Power, Inc. 901-362-5500
Nashville	I-R Air Center 615-781-2550

TEXAS

Dallas	I-R Air Center 214-631-9550
El Paso	Sierra Machinery of El Paso 915-772-0613
Houston	Airdyne, Inc. 713-820-0000
	I-R Air Center 214-753-8365
Odessa	AirMaster Equipment Co. 915-367-9494
San Antonio	I-R Air Center 210-656-9481
Tyler	I-R Air Center 903-593-7303
Witchita Falls	Duncan Equipment 817-855-6110

UTAH

Salt Lake City	Cate Industrial Co. 801-974-0555

VIRGINIA

Alexandria/ Fairfax	Carey Machinery & Supply 800-492-7222
Richmond	I-R Air Center 804-794-9660
Winchester	Carey Machinery & Supply 800-492-7222

WASHINGTON

Seattle	Cascade Machinery & Electric 206-762-0500
Tacoma	Cascade Machinery & Electric 206-572-5500
Tri-Cities	Cascade Machinery & Electric 509-735-6786

WEST VIRGINIA

Charleston/ Dunbar	Total Equipment 304-766-6241

WISCONSIN

Milwaukee/ Menonomee Falls	I-R Air Center 414-252-4610
	Air Power Equipment 612-645-5831

WYOMING

Casper	Energy Equipment 307-234-7999

CANADA

ALBERTA

Calgary	Air Electric Services 403-287-2456
	Coneco Equipment 403-253-6411
Edmonton	Air Electric Services 403-465-0906
	Coneco Equipment 403-451-2630

BRITISH COLUMBIA

Prince George	Normag Equipment 604-563-0558
Vancouver	Auto Marine Electric Ltd. 604-874-7333
	Malkin & Pinton 604-876-1321
	Wiseworth Canada Ltd. 604-576-9441

LABRADOR

	3L Industries (709) 944-2647

MANITOBA

Winnipeg	Dynamic Machine 204-982-4900

NEW BRUNSWICK

Saint John	MIT Sales Ltd. 506-635-8914

NOVA SCOTIA

Bedford	MIT Sales Ltd. 902-835-6600

ONTARIO

Carlton Place	Carleton Auto Parts Ltd. 613-257-2599
London	London Compressed Air Equipment Ltd. 519-681-9900
Mississauga	I-R Air Center 416-821-9300
Ottawa	Regional Compressors 613-748-0453
Sudbury	Maslack Supply Ltd. 705-566-1270
Thunder Bay	Thunder Bay Hydraulics Ltd. 807-623-3151

QUEBEC

Chicoutimi	Les Equipements Industriels Barsatech, Inc. 418-690-2700
Montreal	UAP Inc. 514-253-1820
Quebec	Plad Equipment Co. Ltee. 418-681-7281
Rouyn-Noranda	Formin Inc. 819-762-7751
St. Laurent	Prolew 514-332-1010

SASKATCHEWAN

Regina	Barber Equipment 306-369-7273