N00158.AR.000324
NASJRB WILLOW GROVE
5090.3a

Work Plan for CERFA Category 3 Site Investigations

Naval Air Station Joint Reserve Base
Willow Grove, Pennsylvania

Naval Facilities Engineering Command Mid-Atlantic

Contract No. N62470-08-D-1001
Contract Task Order WE05

November 2009

TETRA TECH

PHIL-23120

WORK PLAN FOR CERFA CATEGORY 3 SITE INVESTIGATIONS

NAVAL AIR STATION JOINT RESERVE BASE WILLOW GROVE, PENNSYLVANIA

COMPREHENSIVE LONG-TERM ENVIRONMENTAL ACTION NAVY (CLEAN) CONTRACT

Submitted to:
Naval Facilities Engineering Command Mid-Atlantic
9742 Maryland Avenue
Norfolk, Virginia 23511-3095

Prepared and Submitted by:
Tetra Tech NUS, Inc.
234 Mall Boulevard, Suite 260
King of Prussia, Pennsylvania 19406

Contract No. N62470-08-D-1001
Contract Task Order WE05

November 2009

PREPARED UNDER THE DIRECTION OF:

RUSSELL E. TURNER, P.E.
PROJECT MANAGER
TETRA TECH NUS, INC
KING OF PRUSSIA, PENNSYLVANIA

APPROVED FOR SUBMISSION BY:

JOHN J. TREPANOWSKI, P.E.
PROGRAM MANAGER
TETRA TECH NUS, INC
KING OF PRUSSIA, PENNSYLVANIA

TABLE OF CONTENTS

SECTION **PAGE**

1.0 INTRODUCTION 1-1
1.1 SITE DESCRIPTION AND SETTING 1-1
1.2 BACKGROUND 1-1
1.3 SAMPLING RATIONALE 1-2

2.0 SUMMARY OF PLANNED FIELD INVESTIGATIONS 2-1
2.1 UTILITY CLEARANCE 2-1
2.2 DIRECT PUSH INVESTIGATION 2-1
2.3 BUILDING 15A INVESTIGATION 2-2
2.4 BUILDING 129 INVESTIGATION 2-3
2.5 QUALITY CONTROL 2.3
2.6 SAMPLE NOMENCLATURE 2-3
2.7 FIELD DECONTAMINATION 2-5
2.8 INVESTIGATION DERIVED WASTE 2-5
2.9 LABORATORY METHODS AND DETECTION LIMITS 2-5
2.10 SURVEYING 2-6
2.11 DATA VALIDATION 2-6

TABLES

NUMBER

1 Field Sample Summary
2 Field Quality Control Sample Summary

FIGURES

NUMBER

1 Location of IR Sites
2 Land Area Environmentally Available for Transfer - December 2008
3 Proposed Soil Boring Locations - Building 164 Septic System
4 Proposed Soil Boring Locations - Building 118 Septic System
5 Proposed Soil Boring Locations - Building 20 and Old Flight Line

APPENDICES

A TETRA TECH STANDARD OPERATING PROCEDURES
B EPA FIELD SAMPLING GUIDE METHOD 5035 A
C NAVY, EPA ACM GUIDANCE
D DETECTION LIMITS REQUIRED
E CERFA AREA OF INTEREST DOCUMENT REVIEW NOTES

1.0 INTRODUCTION

Tetra Tech NUS (Tetra Tech) has prepared this Work Plan for environmental investigations at several Community Environmental Response Facilitation Act (CERFA) Category 3 areas of interest at the Naval Air Station Joint Reserve Base (NAS JRB) Willow Grove, Pennsylvania. These investigations will be carried out to determine if hazardous substances or petroleum products or their derivatives have been released, based on Commonwealth of Pennsylvania ACT 2 standards. This Work Plan was prepared under Contract Task Order No. WE05 under Contract N62470-08-D-1001, Comprehensive Long-Term Environmental Action- Navy (CLEAN).

1.1 SITE DESCRIPTION AND SETTING

NAS JRB Willow Grove, Pennsylvania is located in Horsham Township, Montgomery County in southeastern Pennsylvania, approximately 20 miles north of the city of Philadelphia. NAS JRB Willow Grove occupies approximately 910 acres of 1,070 acres the Department of Defense (DoD) maintains at the Air Station. The Willow Grove Air Reserve Station (ARS) occupies approximately 160 acres of land in the northeastern section of the Air Station and shares common facilities with the NAS JRB. Figure 1 shows the location of NAS JRB Willow Grove and ARS. The Air Station is comprised of flat to slightly rolling terrain and is generally bounded by State Route 611 to the east, State Route 463 to the southwest, and Keith Valley Road to the north.

The main fenced area consists of approximately 910 acres, including an 8,000-foot runway (Runway 15-33); hangars and flight line buildings; a cantonment area of administrative, residential, and recreational buildings; miscellaneous maintenance and support buildings; and undeveloped buffer lands. The Navy also owns small areas of undeveloped land outside of the perimeter fence at the southern end of the runway (south approach zone) and outside of the perimeter fence at the northern end of the runway (north approach zone).

1.2 BACKGROUND

In 2005, NAS JRB Willow Grove, Pennsylvania was designated for closure under the authority of the Defense Base Realignment and Closure Act (BRAC) of 1990, Public Law 101-510 as amended. BRAC law requires that the base closure be in full compliance with the Comprehensive Environmental Response, Compensation, and Liability Act (CERCLA). CERCLA, as amended by CERFA, stipulates that the federal government must identify uncontaminated property scheduled for transfer.

The Navy prepared the CERFA Identification of Uncontaminated Property report in accordance with BRAC law (Tetra Tech, December 2006). The report subdivided the base property into areas that were classified into one of three categories. Category 1 areas are those in which there have been no known releases of hazardous substances or petroleum products or their derivatives, Category 2 areas are those in which a release is known to have occurred, and Category 3 areas are those in which there is a potential for a release to have occurred. In order to clarify the environmental status of CERFA Category 3 areas at NAS JRB Willow Grove, a document review was conducted in July 2009, resulting in recommendations for limited media sampling and analysis at several CERFA Category 3 areas (see Figure 2). These areas consisted of the Building 164 septic system, the former Building 20 former UST locations, the Building 15A boiler blow down area, and possible external friable PACM at Building 129. In addition, one area not identified in the CERFA report, the Building 118 septic system, was determined to require sampling. The plans for sampling were discussed with regulators and agreed upon during scoping sessions on June 10 and June 18, 2009. Appendix E contains the CERFA Category 3 site document review notes.

1.3 SAMPLING RATIONALE

The overall objective for sampling at each of the five areas of interest is to determine if a release of hazardous substances or petroleum products or their derivatives has occurred. Specific information pertaining to the sampling rationale for each area is discussed below.

Buildings 118 and 164 (Septic Systems)

Before a waste water collection system, lift station, and transfer line were installed to service the southwestern side of the Base in the mid 1990's, septic systems were present at Building 114 (Quarters A), Building 118 (Ground Electronics), and Building 164 (Marine Reserve Compound). Most of the available information for these septic systems was derived from a 1997 feasibility study (FS) for their closure completed by Malcolm Pirnie, Inc. Plans for closing the systems were prompted by the detection, in July 1994, of m/p-cresol in the Building 118 and Building 164 systems at 430 ppm and 650 ppm, respectively.

Building 114 is a residential property, reportedly never used for any purpose other than housing. During scoping sessions, the project team agreed that sampling was not necessary at Building 114 since there is no reason to suspect a release of hazardous substances.

As part of the FS, a field sampling investigation was conducted to assess the potential impact of the systems to soil and groundwater. Samples were collected from the septic tanks at each of the three

locations. Subsurface soil samples were collected from the tile fields at Buildings 118 and 164, since m/p cresol had been detected in these systems. The subsurface soil samples were collected using the direct push sampling technique. All samples were analyzed for SVOCs by method SW-847 8270B to test for the presence of m/p cresol.

At Building 118, only the functioning septic system was sampled. One sample was collected from the sludge in the bottom of the distribution box. (The manhole for the septic tank was not accessible.) Two subsurface soil samples were collected from the tile field from a depth of 9 - 9.5 feet bgs. The bottom of the distribution box was approximately 8 feet bgs. The borings were terminated at a depth of 12 feet bgs. There were no detections in any of the samples.

The Building 118 septic system that was functioning at the time of the FS was constructed in the early to mid-1980's. Prior to that time, a smaller-capacity system located immediately northwest of the functioning system was used. The FS report states that there were no observable artifacts of this older system. In 2001, the Building 118 septic tank from the former smaller-capacity system was uncovered by a subcontractor while installing a waste line from the dog kennel concrete pad for the military dog training facility located adjacent to Building 118. Plans were made for testing and closure of the septic system, but documentation of closure activities has not been found.

At the Building 164 tile field, three subsurface soil samples were collected during the FS. Two of the samples were collected from a depth of 6.5 - 7 feet below ground surface (bgs), and the third from 8.5 - 9.0 feet bgs. The depth of the invert of the septic tank outfall piping was 5.5 feet below the septic tank manhole. Soil boring refusal was encountered at 10 feet bgs. One sample was collected from the contents of the septic tank, which were liquid. There were no compounds detected in any of the samples.

At the time of the FS, the Building 164 septic tank was used as a holding tank, which was pumped out regularly and the contents disposed at the Horsham Township Sanitary Authority (HTSA). The tile field was reportedly damaged by construction activity and disconnected from the septic tank.

Subsurface soil sampling will be performed at the Building 118 septic system and both Building 164 septic systems since only a limited analysis (SVOCs) was performed on the soil samples collected previously, and no sampling was performed at the older Building 164 system. The sample analysis will include VOCs, SVOCs, and metals, since the project team considers these the most likely contaminants at each area.

Buildings 20 and 15A (Old Flight Line)

Former Building 20 was razed in the late 1980's or early 1990's, but the foundation remains. File information indicates that there were seven underground storage tanks (USTs) associated with Building 20, ranging in size from 13,500 gallons to 20,000 gallons. All were used for aviation gasoline. The tanks measured 25 feet to 38 feet in length and 8 feet to 10.5 feet in width, and were buried approximately 4 feet beneath the existing grade. The tanks may have been removed when the building was demolished, but no record of the removal was found. Based on historical aerial photographs and blueprints, a taxiway constructed in the early 1960's overlies three of the former UST locations, rendering them inaccessible to subsurface investigation. Subsurface soil sampling for VOCs and SVOCs will be performed at the four accessible former UST locations since there is no record of proper closure of the tanks.

Building 15A (Old Boiler Building) is located within the Old Flight Line. The CERFA report noted that the boiler blow down pipe discharged to the ground surface and stressed vegetation was visible at this location. Surface soil sampling for SVOCs and metals will be performed at the blow down discharge area to determine if contamination is present.

Building 129 (Liquid Oxygen Storage Area)

Building 129 is primarily used as an office building in the area of Building 188, the liquid oxygen (LOX) storage shed. Building 129 is a very simple one story cinderblock building on a concrete slab. The CERFA report noted external friable PACM during the visual inspection of these buildings. A sample of the PACM will be collected for asbestos analysis determine if the material contains asbestos.

2.0 SUMMARY OF PLANNED FIELD INVESTIGATIONS

The field investigation will consist of the collection of subsurface soil samples at the Building 118 and 164 septic system leach fields, the former Building 20 UST locations, and a surface soil sample at the Building 15A boiler blowdown. A sample from the external friable PACM in Building 129 will also be collected. The Tetra Tech NUS Standard Operating Procedures (SOPs) for direct push technology, borehole and sample logging, soil sampling, field documentation, utility locating and excavation clearance, and decontamination of field equipment are included in Appendix A. Soil samples for VOC analysis will be collected and analyzed according to the EPA Region III Fact Sheet: Field Samplers Guide to the Collection and Handling of Soil Samples for Volatile Organic Analysis using SW 846 Method 5035A (Appendix B). The sample for asbestos analysis will be collected and analyzed according to the Navy's Asbestos Management Program and the EPA's Asbestos/NESHAP Regulated Asbestos Containing Materials Guidance.

Tetra Tech will prepare a site specific Health and Safety Plan (HASP) for this investigation similar to other HASPs used at NAS JRB Willow Grove. All work will be performed in accordance with the Tetra Tech site specific HASP and Tetra Tech NUS SOPs.

2.1 UTILITY CLEARANCE

Prior to the commencement of any intrusive activities, Tetra Tech will procure the services of a utility locating contractor to identify and mark-out utilities that may be present within the vicinity of proposed soil boring locations at the Building 118 and 164 leach fields and the former Building 20 UST locations. The utility locating survey will also be used to confirm that the former Building 20 USTs have been removed. Subsurface utilities will also be cleared by the direct push subcontractor by notifying the Pennsylvania One-Call utility clearing service.

2.2 DIRECT PUSH INVESTIGATION

The direct push investigation will be conducted at three separate areas: the Building 118 leach field, the Building 164 leach field, and the former UST locations at the former Building 20. A field geologist will oversee drilling using direct push technology. Soil will be collected in a disposable acetate liner inside of a metal tube called a macrocore sampler. The macrocore sampler will be advanced in four foot sample intervals to the top of bedrock, an approximate depth of 10 to 20 feet. The cores will be screened visually and with the use of a PID. The field geologist will log the soil samples continuously using the Unified Soil Classification System (USCS). Sample identification numbers, locations, and analyses are presented in Table 1. The proposed activities at each of these areas are discussed below.

Buildings 118 and 164 Leach Fields

Two (2) direct push soil borings will be installed at each of the Building 118 and Building 164 septic system leach fields. Both of the leach fields at Building 118 will be sampled. One (1) subsurface soil sample will be collected from each boring and analyzed for Target Compound List (TCL) volatile organic compounds (VOCs), TCL semi-volatile compounds (SVOCs), and Target Analyte List (TAL) metals.

The soil sample from each boring will be collected from the depth between 6 feet bgs (the approximate depth of outfall piping) and the depth of bedrock at which evidence of the highest levels of contamination (visual staining or elevated PID readings) is observed. If no evidence of contamination is observed, then the sample will be collected immediately above the water table or the soil/bedrock interface.

The proposed soil boring locations are shown on Figures 3 and 4.

Building 20

One direct push soil boring will be installed at each of the four former UST locations southeast of former Building 20 that are accessible (not underneath the taxiway). One (1) subsurface soil sample will be collected from each boring for TCL VOC and TCL SVOC analysis.

The sample will be collected from the depth at which evidence of the highest levels of contamination (visual staining or elevated PID readings) is observed. If no evidence of contamination is observed, then the sample will be collected from the depth at which native soil is first encountered beneath fill material. If the depth of fill/native soil interface is indeterminate, then the sample will be collected at the estimated invert depth of the USTs (approximately 14 feet bgs). The proposed soil boring locations are shown on Figure 5.

The soil to be sampled will be placed in a clean stainless steel bowl and homogenized before placing the sample in the sample jars using a dedicated disposable trowel. The portion of the sample for VOC analysis will be collected first, prior to homogenization, using an EnCore™ sampler following the procedures described in Appendix B. At the end of each sampling day, the samples will be packaged in iced coolers and shipped to a subcontracted, Navy-certified analytical laboratory via overnight courier.

2.3 BUILDING 15A INVESTIGATION

One surface soil sample will be collected with a stainless-steel hand-auger at the former location of Building 15A boiler blow down for TCL SVOC and TAL metals analysis. The sample will be obtained from

a depth interval of 0 to 1 foot. A field technician will obtain the sample material by digging with a stainless-steel hand-auger, and placing the soil into a clean stainless steel bowl. The sample material will be homogenized, transferred into the laboratory supplied sample jars, and placed in iced coolers for temporary storage.

2.4 BUILDING 129 INVESTIGATION

One sample will be collected for asbestos analysis from the external friable PACM at Building 129 noted in the CERFA report. The sample will be collected and analyzed according to the Navy's Asbestos Management Program and the EPA's Asbestos/NESHAP Regulated Asbestos Containing Materials Guidance.

2.5 QUALITY CONTROL

For quality control, one field duplicate sample (one per 10 samples), one equipment rinsate blank, and one field blank will be collected. In addition, one trip blank (one per cooler) will be analyzed for VOCs. The equipment rinsate is prepared in the field, from analyte-free water, by pouring the water over decontaminated sampling devices into clean sample bottles. The field quality control sample summary is presented in Table 2.

2.6 SAMPLE NOMENCLATURE

Each sample collected for analysis will be assigned a unique sample tracking number. This number will consist of a two-segment alphanumeric code that identifies the site, the sample type [sample medium], the sample location, and the sample depth indicator. Tetra Tech NUS SOPs CT-04 addresses sample nomenclature (Appendix A). The alphanumeric coding system to be used is as follows:

Site Identifier:

15A = Building 15A
129 = Building 129
114 = Building 114 leach field
164 = Building 164 leach field
20 = Former Building 20

Sample Medium:

SS = surface soil
SB = subsurface soil
BM = building material

Sample Location:

At each site, each sample will be assigned a two digit consecutive sample location number in the order of installation.

Sample Depth:

Sample depth in feet will be indicated by a four digit designation following the sample location. For example, the first sample collected from building 164 at a depth of 8 to 9 feet will be assigned the sample designation 164SB0010809.

Field quality assurance/quality control (QA/QC) sample nomenclature will be designated using a different coding system. The QC code will consist of a three- to four- segment alpha-numeric code that identifies the sample QC type, the date the sample was collected, and the number of this type of QC sample collected on that date.

The QC types are identified as:

TB = Trip Blank
RB = Rinsate Blank (Equipment Blank)
FB = Field Blank
FD = Field Duplicate

For example a QC sample (TB and RB) for the first rinsate blank of the day collected on August 12, 2009 would be designated as RB08120901. The sampling time recorded on the Chain-of-Custody (COC) Form, labels and tags for duplicate samples will be 0000 so that the samples are “blind” to the laboratory. Notes detailing the sample number, time, date, and type will be recorded on the routine sample log sheets and will document the location of the duplicate sample (sample log sheets are not provided to the laboratory). Documentation for all other QC types (TB and RB) will be recorded on the QC Sample Log Sheet (see SOP on Field Documentation).

All pertinent information regarding sample identification will be recorded in the field logbooks and on sample log sheets where appropriate.

2.7 FIELD DECONTAMINATION

The sampling equipment used for collecting samples will be decontaminated before field sampling, between samples, and after sampling activities. Field equipment to be decontaminated includes but is not limited to: hand auger, stainless-steel mixing bowl, rods and stainless steel trowels/spoons (unless disposable trowels are used), and steel direct push macrocore samplers, including drive tips, acetate liner opener.

The following decontamination steps will be followed:

- Remove all soils to the extent possible
- Alconox or liquinox detergent solution wash
- Potable water rinse
- Rinse with pesticide-grade isopropanol
- Deionized water rinse
- Air dry
- Wrap in aluminum foil (if not immediately used)

2.8 INVESTIGATION DERIVED WASTE

Surplus soil generated during sampling will be placed back at the point of generation. Decontamination fluids will be disposed to the ground surface at the point of generation. Used acetate liners, used personal protection equipment (PPE) including Tyvek suits and latex and nitrile gloves, will be bagged and disposed as municipal-type waste.

2.9 LABORATORY METHODS AND DETECTION LIMITS

All soil sample analyses will be performed using EPA SW-846 methodologies at a Navy-certified laboratory. The required laboratory detection limits for VOCs, SVOCs, and metals in soil samples are presented in Appendix D.

2.10 SURVEYING

A Pennsylvania licensed surveyor will be subcontracted by Tetra Tech to survey the horizontal location of each of the soil borings. The horizontal measurements shall be accurate to 0.1 foot. Each of the locations will be surveyed relative to the coordinates of established site benchmarks.

2.11 DATA VALIDATION

Tetra Tech will begin the data review process by initially examining and accepting the data submitted by the laboratory. The data package will be reviewed for accuracy, precision, and completeness (all pertinent information is included, all appropriate forms are signed and dated, calculations are correct, and holding times and QC sample acceptance criteria have been met). The laboratory project manager will also review the data package to ensure that the submittal meets the Tetra Tech and Navy specifications. The data package will include a narrative, copies of the chains-of-custody, method summaries and references, summary of the laboratory identification numbers, receipt logs, extraction and analysis logs, analytical results, QC results, and raw data. The laboratory will deliver the analytical data as a hard copy and electronic disk.

A full (Level IV) data validation will be performed using criteria for SW-846 methods and the DoD QSM. If not included in the aforementioned, the logic outlined in the Region 3 Modifications to the National Functional Guidelines for Organic Data Review (1994) or the Region 3 Modifications to the Laboratory Data Validation Functional Guidelines for Evaluating Inorganic Analyses (1993) will be used to apply qualifiers to data.

TABLES

TABLE 1

FIELD SAMPLE SUMMARY
CERFA CATEGORY 3 SITES
NAS JRB WILLOW GROVE
WILLOW GROVE, PENNSYLVANIA

Sample Identification	Location	Analyses			
		TCL VOCs	TCL SVOCs	TAL Metals	Asbestos
164SB001XXXX	Building 164	√	√	√	
164SB002XXXX	Building 164	√	√	√	
118SB001XXXX	Building 118	√	√	√	
118SB002XXXX	Building 118	√	√	√	
020SB001XXXX	Former Building 20	√	√		
020SB002XXXX	Former Building 20	√	√		
020SB003XXXX	Former Building 20	√	√		
020SB004XXXX	Former Building 20	√	√		
15ASS010001	Building 15A		√	√	
129BM001	Building 129				√

Notes:

- xxxx - Sample depth.

TABLE 2

FIELD QUALITY CONTROL SAMPLE SUMMARY
CERFA CATEGORY 3 SITES
NAS JRB WILLOW GROVE
WILLOW GROVE, PENNSYLVANIA

Matrix	Analytical Group	No. of Sampling Locations	No. of Field Duplicates	No. of MS/MSDs[1]	No. of Field Blanks	No. of Equip. Blanks	No. of VOA Trip Blanks	No. of PT Samples	Total No. of Samples to Lab
Soil	VOCs	8	1	1	1	1	1	NA	12
Soil	SVOCs	9	1	1	1	1	NA	NA	12
Soil	Metals	5	1	1	1	1	NA	NA	8
PACM	Asbestos	1	NA	NA	NA	NA	NA	NA	1

[1]Although the Matrix Spike/Matrix Spike Duplicate (MS/MSD) is not typically considered a field QC, it is included here because location determination is often established in the field. The MS/MSD is not included in the Total No. of Samples sent to the Lab.

FIGURES

112G02014/0610/112G02014CM01.DWG 07/21/09 MKB

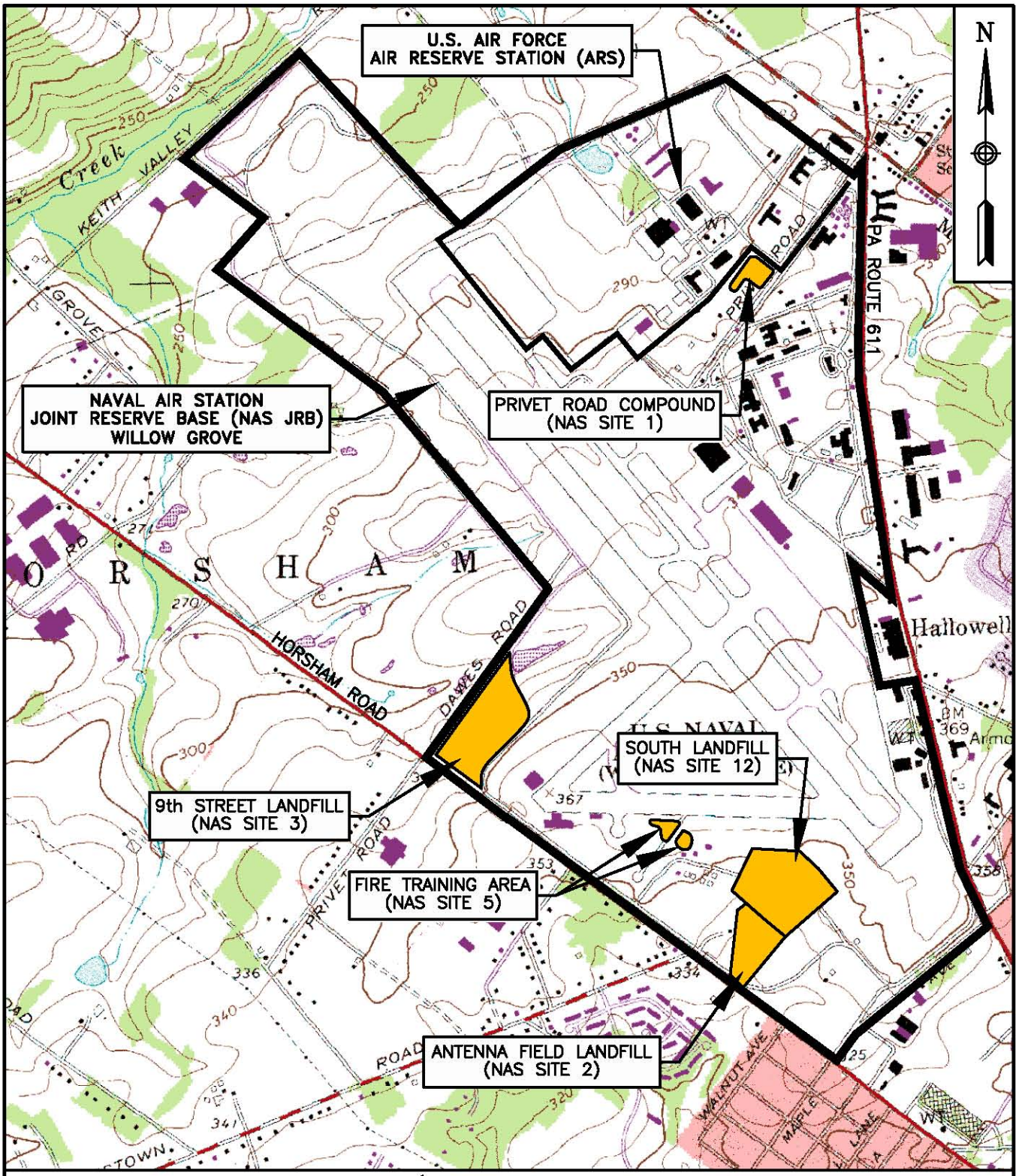

BASE MAP IS A PORTION OF THE AMBLER, PA U.S.G.S. 7.5 MINUTE QUADRANGLE MAP, DATED 1963, PHOTOREVISED IN 1983.

QUADRANGLE LOCATION

0 1500 3000

SCALE IN FEET

TETRA TECHNUS, INC.

LOCATION OF IR SITES
NAS JRB WILLOW GROVE
WILLOW GROVE, PENNSYLVANIA

SCALE	AS NOTED
FILE	112G02014CM01
REV	0
DATE	07/06/09
FIGURE NUMBER	FIGURE 1

DECEMBER 2008

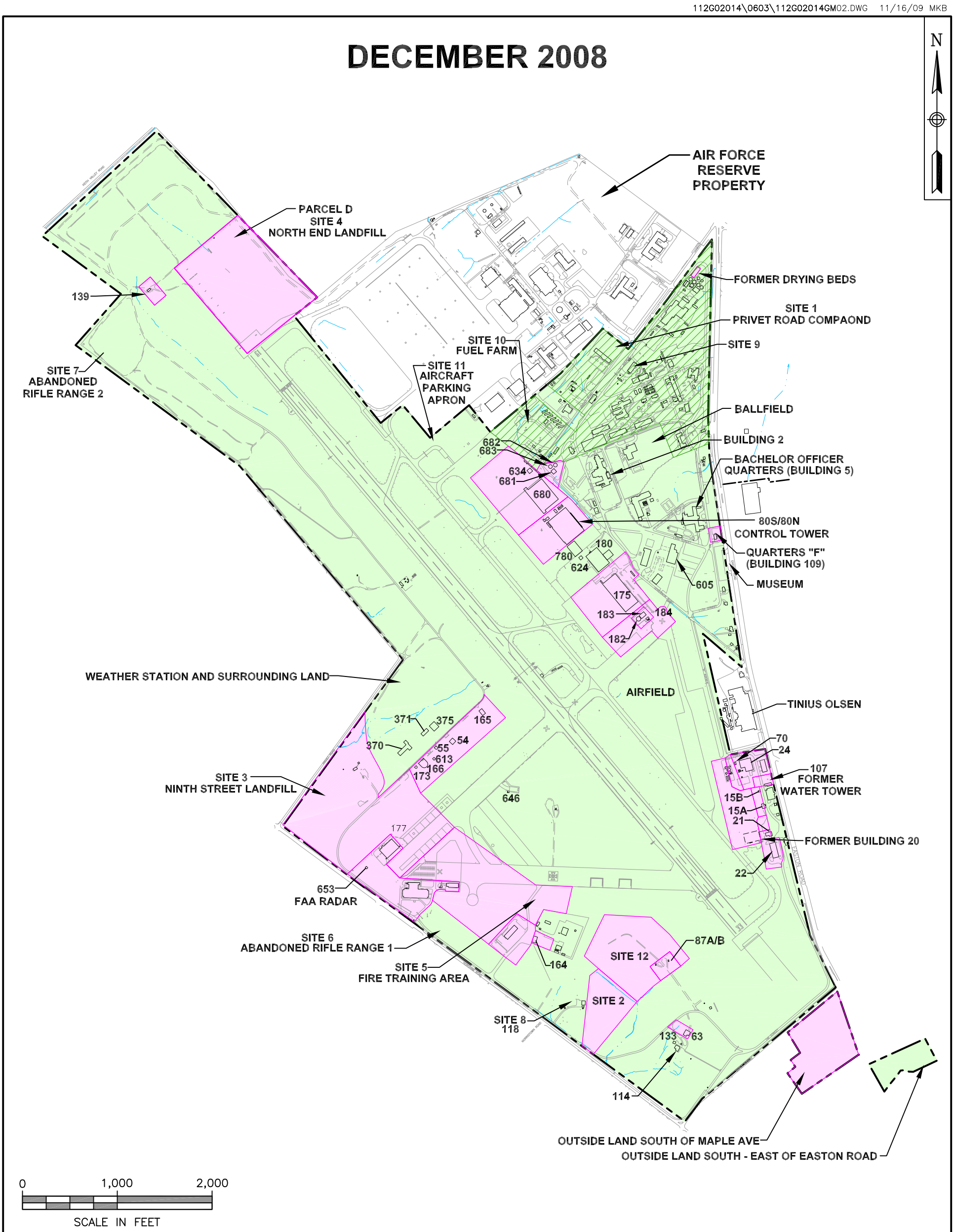

LEGEND

- ENVIRONMENTALLY READY FOR TRANSFER (607 ACRES)
- ENVIRONMENTALLY READY FOR TRANSFER WITH LAND USE CONTROLS (55 ACRES)
- NOT ENVIRONMENTALLY READY FOR TRANSFER (184 ACRES)
- NAS JRB WILLOW GROVE BOUNDARY

TETRA TECH NUS, INC.

LAND AREA ENVIRONMENTALLY AVAILABLE FOR TRANSFER
DECEMBER 2008
NAS JRB WILLOW GROVE
WILLOW GROVE, PENNSYLVANIA

FILE	SCALE
112G00845GM02	AS NOTED
FIGURE NUMBER	REV / DATE
FIGURE 2	1 / 11/16/09

112G02014/0610/112G02014GM01.DWG 07/22/09 MKB

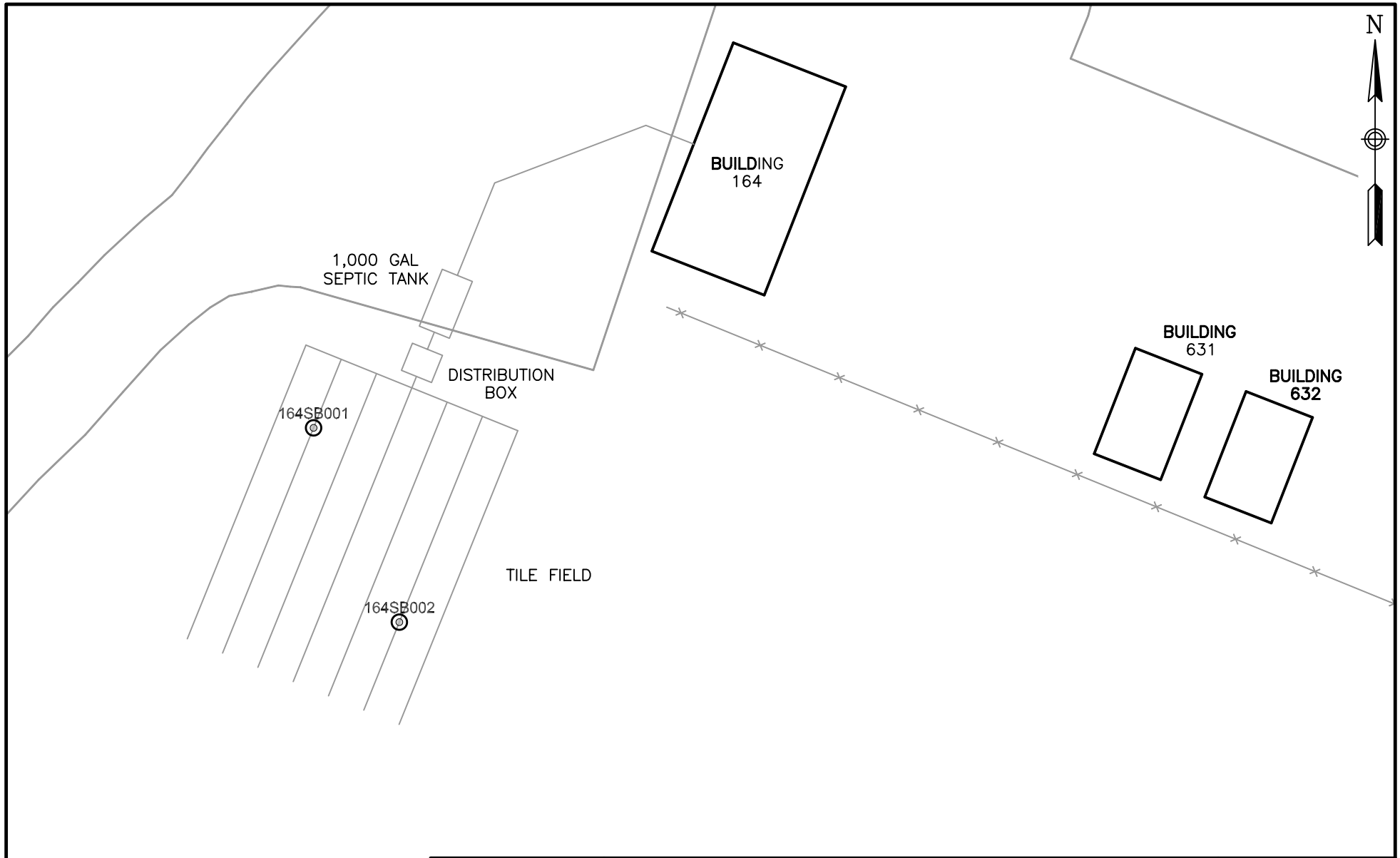

LEGEND

◎ PROPOSED SOIL BORING LOCATION

0 40 80

SCALE IN FEET

TETRA TECHNUS, INC.

PROPOSED SOIL BORING LOCATIONS
BUILDING 164 SEPTIC SYSTEM
NAS JRB WILLOW GROVE
WILLOW GROVE, PENNSYLVANIA

SCALE	AS NOTED
FILE	11G02014GM01
REV	0
DATE	07/22/09
FIGURE NUMBER	FIGURE 3

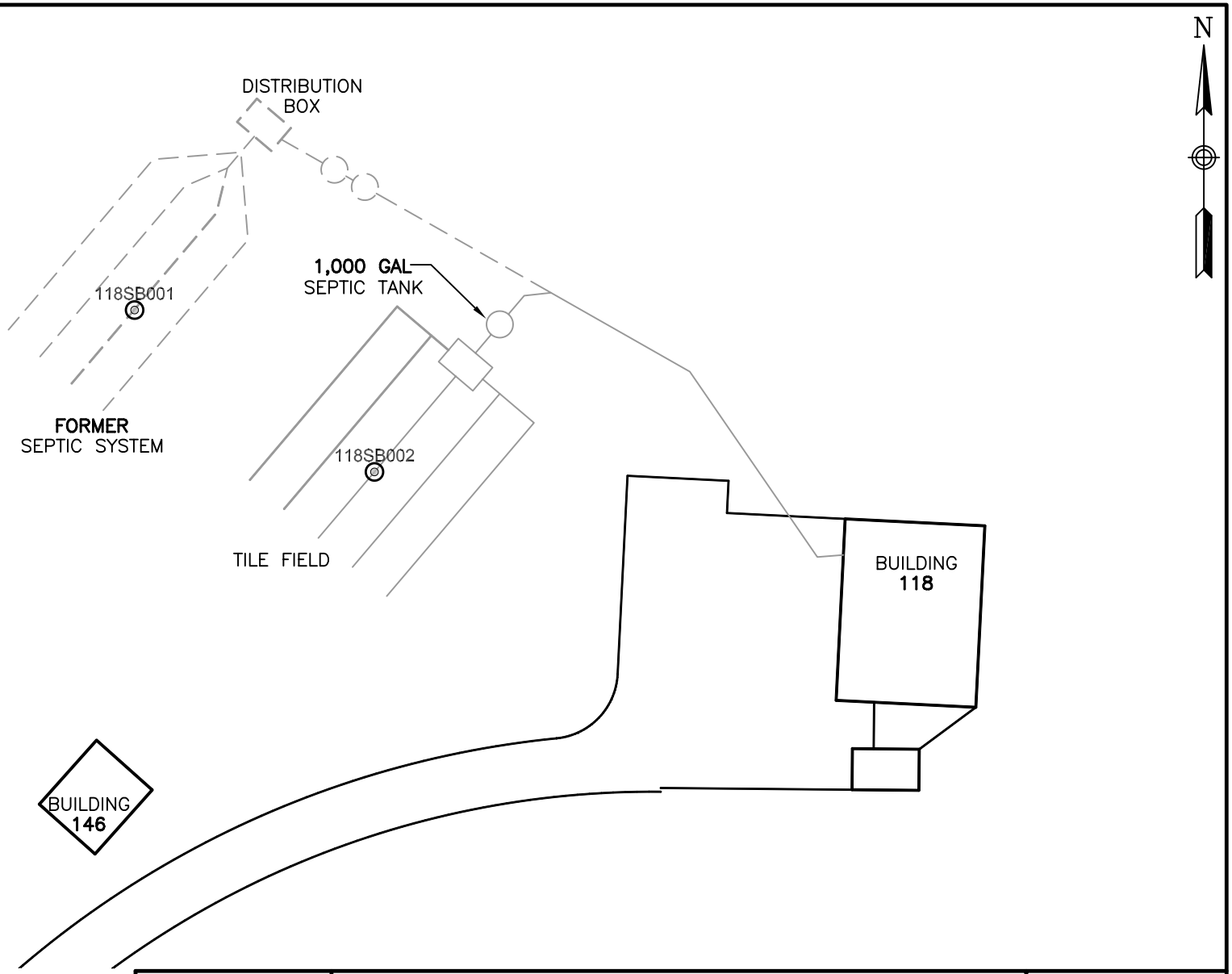

LEGEND

◎ PROPOSED SOIL BORING LOCATION

0 40 80
SCALE IN FEET

TETRA TECHNUS, INC.

PROPOSED SOIL BORING LOCATIONS
BUILDING 118 SEPTIC SYSTEM
NAS JRB WILLOW GROVE
WILLOW GROVE, PENNSYLVANIA

SCALE	AS NOTED
FILE	11G02014GM01
REV 0	DATE 07/22/09
FIGURE NUMBER	FIGURE 4

112G02014/0610/112G02014GM01.DWG 07/28/09 MKB

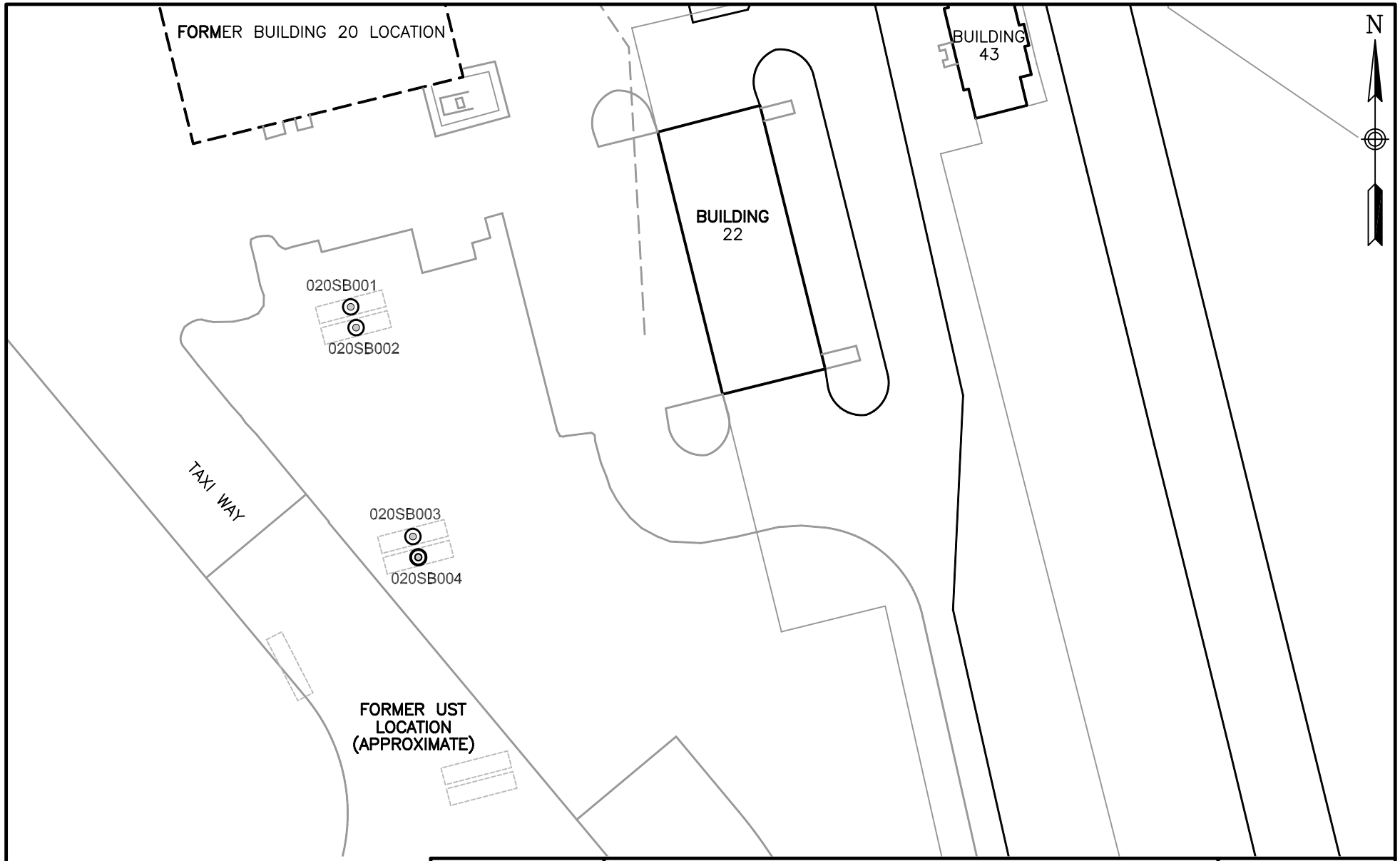

LEGEND

◎ PROPOSED SOIL BORING LOCATION

0 80 160

SCALE IN FEET

TETRA TECHNUS, INC.

PROPOSED SOIL BORING LOCATIONS
BUILDING 20 AND OLD FLIGHT LINE
NAS JRB WILLOW GROVE
WILLOW GROVE, PENNSYLVANIA

SCALE	AS NOTED
FILE	11G02014GM01
REV 0	DATE 07/28/09
FIGURE NUMBER	FIGURE 5

APPENDIX A

TETRA TECH NUS STANDARD OPERATING PROCEDURES

TABLE OF CONTENTS

SECTION **PAGE**

1.0 PURPOSE **3**

2.0 SCOPE **3**

3.0 GLOSSARY **3**

4.0 RESPONSIBILITIES **3**

5.0 PROCEDURES **3**

5.1 MATERIALS NEEDED 3
5.2 CLASSIFICATION OF SOILS 3
5.2.1 USCS Classification 6
5.2.2 Color 6
5.2.3 Relative Density and Consistency 6
5.2.4 Weight Percentages 7
5.2.5 Moisture 10
5.2.6 Stratification 10
5.2.7 Texture/Fabric/Bedding 10
5.2.8 Summary of Soil Classification 10
5.3 CLASSIFICATION OF ROCKS 13
5.3.1 Rock Type 13
5.3.2 Color 16
5.3.3 Bedding Thickness 16
5.3.4 Hardness 16
5.3.5 Fracturing 16
5.3.6 Weathering 17
5.3.7 Other Characteristics 17
5.3.8 Additional Terms Used in the Description of Rock 18
5.4 ABBREVIATIONS 19
5.5 BORING LOGS AND DOCUMENTATION 19
5.5.1 Soil Classification 19
5.5.2 Rock Classification 23
5.5.3 Classification of Soil and Rock from Drill Cuttings 24
5.6 REVIEW 24

6.0 REFERENCES **24**

7.0 RECORDS **25**

TABLE OF CONTENTS (Continued)

FIGURES

NUMBERS **PAGE**

1 BORING LOG (EXAMPLE) 4
2 CONSISTENCY FOR COHESIVE SOILS 8
3 BEDDING THICKNESS CLASSIFICATION 10
4 GRAIN SIZE CLASSIFICATION FOR ROCKS 12
5 COMPLETED BORING LOG (EXAMPLE) 17

1.0 PURPOSE

The purpose of this document is to establish standard procedures and technical guidance on borehole and sample logging.

2.0 SCOPE

These procedures provide descriptions of the standard techniques for borehole and sample logging. These techniques shall be used for each boring logged to provide consistent descriptions of subsurface lithology. While experience is the only method to develop confidence and accuracy in the description of soil and rock, the field geologist/engineer can do a good job of classification by careful, thoughtful observation and by being consistent throughout the classification procedure.

3.0 GLOSSARY

None.

4.0 RESPONSIBILITIES

Site Geologist. Responsible for supervising all boring activities and assuring that each borehole is completely logged. If more than one rig is being used on site, the Site Geologist must make sure that each field geologist is properly trained in logging procedures. A brief review or training session may be necessary prior to the start up of the field program and/or upon completion of the first boring.

5.0 PROCEDURES

The classification of soil and rocks is one of the most important jobs of the field geologist/engineer. To maintain a consistent flow of information, it is imperative that the field geologist/engineer understand and accurately use the field classification system described in this SOP. This identification is based on visual examination and manual tests.

5.1 Materials Needed

When logging soil and rock samples, the geologist or engineer may be equipped with the following:

- Rock hammer
- Knife
- Camera
- Dilute hydrochloric acid (HCl)
- Ruler (marked in tenths and hundredths of feet)
- Hand Lens

5.2 Classification of Soils

All data shall be written directly on the boring log (Figure 1) or in a field notebook if more space is needed. Details on filling out the boring log are discussed in Section 5.5.

FIGURE 1
BORING LOG (EXAMPLE)

BORING LOG

Page ___ of ___

PROJECT NAME: _____ BORING NUMBER: _____
PROJECT NUMBER: _____ DATE: _____
DRILLING COMPANY: _____ GEOLOGIST: _____
DRILLING RIG: _____ DRILLER: _____

Sample No. and Type or RQD	Depth (Ft.) or Run No.	Blows / 6" or RQD (%)	Sample Recovery / Sample Length	Lithology Change (Depth/Ft.) or Screened Interval	MATERIAL DESCRIPTION: Soil Density/ Consistency or Rock Hardness	Color	Material Classification	USCS *	Remarks	PID/FID Reading (ppm): Sample	Sampler BZ	Borehole**	Driller BZ**

* When rock coring, enter rock brokeness.

** Include monitor reading in 6 foot intervals @ borehole. Increase reading frequency if elevated response read.

Drilling Area Background (ppm): ☐

Remarks: _____

Converted to Well: Yes _____ No _____ Well I.D. #: _____

FIGURE 1 (CONTINUED)

SOIL TERMS

UNIFIED SOIL CLASSIFICATION (USCS)

COARSE-GRAINED SOILS More Than Half of Material is LARGER Than No. 200 Sieve Size					FINE-GRAINED SOILS More Than Half of Material is SMALLER Than No. 200 Sieve Size					
FIELD IDENTIFICATION PROCEDURES (Excluding Particles Larger Than 3 Inches and Basing Fractions on Estimated Weights)			GROUP SYMBOL	TYPICAL NAMES	FIELD IDENTIFICATION PROCEDURES (Excluding Particles Larger Than 3 Inches and Basing Fractions on Estimated Weights)				GROUP SYMBOL	TYPICAL NAMES
					Identification Procedures on Fraction Smaller than No. 40 Sieve Size					
						DRY STRENGTH (Crushing Characteristics)	DILATANCY (Reaction to Shaking)	TOUGHNESS (Consistency Near Plastic Limit)		
GRAVELS (More than 50% of Coarse Fraction Retained on No. 4 Sieve)	CLEAN GRAVELS (Less Than 5% Fines)	Wide range in grain size and substantial amounts of all intermediate particle sizes.	GW	Well graded gravels, gravel-sand mixtures, little or no fines.	SILTS AND CLAYS Liquid Limit less than 50	None to Slight	Quick to Slow	None	ML	Inorganic silts and very fine sands, rock flour, silty or clayey fine sands with slight plasticity.
		Predominantly one size or a range of sizes with some intermediate sizes missing.	GP	Poorly graded gravels, gravel-sand mixtures, little or no fines.		Medium to High	None to Very Slow	Medium	CL	Inorganic clays of low to medium plasticity, gravelly clays, sandy clays, silty clays, lean clays.
	GRAVELS WITH FINES (More Than 12% Fines)	Non-plastic fines (for identification procedures, see ML)	GM	Silty gravels, poorly graded gravel-sand-silt mixtures.		Slight to Medium	Slow	Slight	OL	Organic silts and organic silt-clays of low plasticity.
		Plastic fines (for identification procedures, see CL)	GC	Clayey gravels, poorly graded gravel-sand-clay mixtures.	SILTS AND CLAYS Liquid Limit greater than 50	Slight to Medium	Slow to None	Slight to Medium	MH	Inorganic silts, micaceous or diatomaceous fine sandy or silty soils, elastic silts.
SANDS (50% or More of Coarse Fraction Passes No. 4 Sieve)	CLEAN SANDS (Less Than 5% Fines)	Wide range in grain size and substantial amounts of all intermediate particle sizes.	SW	Well graded sand, gravelly sands, little or no fines.		High to Very High	None	High	CH	Inorganic clays of high plasticity, fat clays.
		Predominantly one size or a range of sizes with some intermediate sizes missing.	SP	Poorly graded sands, gravelly sands, little or no fines.		Medium to High	None to Very Slow	Slight to Medium	OH	Organic clays of medium to high plasticity.
	SANDS WITH FINES (More Than 12% Fines)	Non-plastic fines (for identification procedures, see ML)	SM	Silty sands, poorly graded sand-silt mixtures.	HIGHLY ORGANIC SOILS	Readily identified by color, odor, spongy feel and frequently by fibrous texture.			Pt	Peat and other organic soils
		Plastic fines (for identification procedures, see CL)	SC	Clayey sands, poorly graded sand-clay mixtures.						

Boundary classifications: Soils possessing characteristics of two groups are designated by combining group symbols. For example, GW-GC, well graded gravel-sand mixture with clay binder.
All sieve sizes on this chart are U.S. Standard.

DENSITY OF GRANULAR SOILS

DESIGNATION	STANDARD PENETRATION RESISTANCE-BLOWS/FOOT
Very Loose	0-4
Loose	5-10
Medium Loose	11-30
Dense	31-50
Very Dense	Over 50

CONSISTENCY OF COHESIVE SOILS

CONSISTENCY	UNCONFINED COMPRESSIVE STRENGTH (TONS/SQ. FT.)	STANDARD PENETRATION RESISTANCE-BLOWS/FOOT	FIELD IDENTIFICATION METHODS
Very Soft	Less than 0.25	0 to 2	Easily penetrated several inches by fist
Soft	0.25 to 0.50	2 to 4	Easily penetrated several inches by thumb.
Medium Stiff	0.50 to 1.0	4 to 8	Can be penetrated several inches by thumb.
Stiff	1.0 to 2.0	8 to 15	Readily indented by thumb.
Very Stiff	2.0 to 4.0	15 to 30	Readily indented by thumbnail.
Hard	More than 4.0	Over 30	Indented with difficulty by thumbnail.

ROCK TERMS

ROCK HARDNESS (FROM CORE SAMPLES)			ROCK BROKENNESS		
Descriptive Terms	Scratcher or Knife Effects	Hammer Effects	Descriptive Terms	Abbreviation	Spacing
Soft	Easily Gouged	Crushes when pressed with hammer	Very Broken	(V.Br.)	0-2"
Medium Soft	Can be Gouged	Breaks (one blow); crumbly edges	Broken	(Br.)	2"-1'
Medium Hard	Can be scratched	Breaks (one blow); sharp edges	Blocky	(Bl.)	1'-3'
Hard	Cannot be scratched	Breaks conchoidally (several blows); sharp edges	Massive	(M.)	3'-10'

LEGEND :

SOIL SAMPLES - TYPES	ROCK SAMPLES - TYPES	WATER LEVELS
5-1/2" Split Barrel Sample	X-NX (Conventional) Core (2.1-1/8" O.D.)	12/9
STD 3" O.D. Undisturbed Sample	QNQ (Ultradrill) Core (2.1-1/8" O.D.)	▽ 12.4' Initial Level w/Date & Depth
O - Other Samples, Specify in Remarks	Z - Other Core Sizes, Specify in Remarks	12/9
		▽ 12.4' Stabilized Level w/Date & Depth

5.2.1 USCS Classification

Soils are to be classified according to the Unified Soil Classification System (USCS). This method of classification is detailed in Figure 1 (Continued).
This method of classification identifies soil types on the basis of grain size and cohesiveness.

Fine-grained soils, or fines, are smaller than the No. 200 sieve and are of two types: silt (M) and clay (C). Some classification systems define size ranges for these soil particles, but for field classification purposes, they are identified by their respective behaviors. Organic material (O) is a common component of soil but has no size range; it is recognized by its composition. The careful study of the USCS will aid in developing the competence and consistency necessary for the classification of soils.

Coarse-grained soils shall be divided into rock fragments, sand, or gravel. The terms sand and gravel not only refer to the size of the soil particles but also to their depositional history. To insure accuracy in description, the term rock fragments shall be used to indicate angular granular materials resulting from the breakup of rock. The sharp edges typically observed indicate little or no transport from their source area, and therefore the term provides additional information in reconstructing the depositional environment of the soils encountered. When the term "rock fragments" is used it shall be followed by a size designation such as "(1/4 inchΦ-1/2 inchΦ)" or "coarse-sand size" either immediately after the entry or in the remarks column. The USCS classification would not be affected by this variation in terms.

5.2.2 Color

Soil colors shall be described utilizing a single color descriptor preceded, when necessary, by a modifier to denote variations in shade or color mixtures. A soil could therefore be referred to as "gray" or "light gray" or "blue-gray." Since color can be utilized in correlating units between sampling locations, it is important for color descriptions to be consistent from one boring to another.

Colors must be described while the sample is still moist. Soil samples shall be broken or split vertically to describe colors. Samplers tend to smear the sample surface creating color variations between the sample interior and exterior.

The term "mottled" shall be used to indicate soils irregularly marked with spots of different colors. Mottling in soils usually indicates poor aeration and lack of good drainage.

Soil Color Charts shall not be used unless specified by the project manager.

5.2.3 Relative Density and Consistency

To classify the relative density and/or consistency of a soil, the geologist is to first identify the soil type. Granular soils contain predominantly sands and gravels. They are noncohesive (particles do not adhere well when compressed). Finer-grained soils (silts and clays) are cohesive (particles will adhere together when compressed).

The density of noncohesive, granular soils is classified according to standard penetration resistances obtained from split-barrel sampling performed according to the methods detailed in Standard Operating Procedures GH-1.3 and SA-1.3. Those designations are:

Designation	Standard Penetration Resistance (Blows per Foot)
Very loose	0 to 4
Loose	5 to 10
Medium dense	11 to 30
Dense	31 to 50
Very dense	Over 50

Standard penetration resistance is the number of blows required to drive a split-barrel sampler with a 2-inch outside diameter 12 inches into the material using a 140-pound hammer falling freely through 30 inches. The sampler is driven through an 18-inch sample interval, and the number of blows is recorded for each 6-inch increment. The density designation of granular soils is obtained by adding the number of blows required to penetrate the last 12 inches of each sample interval. It is important to note that if gravel or rock fragments are broken by the sampler or if rock fragments are lodged in the tip, the resulting blow count will be erroneously high, reflecting a higher density than actually exists. This shall be noted on the log and referenced to the sample number. Granular soils are given the USCS classifications GW, GP, GM, SW, SP, SM, GC, or SC (see Figure 1).

The consistency of cohesive soils is determined by performing field tests and identifying the consistency as shown in Figure 2.

Cohesive soils are given the USCS classifications ML, MH, CL, CH, OL, or OH (see Figure 1).

The consistency of cohesive soils is determined either by blow counts, a pocket penetrometer (values listed in the table as Unconfined Compressive Strength), or by hand by determining the resistance to penetration by the thumb. The pocket penetrometer and thumb determination methods are conducted on a selected sample of the soil, preferably the lowest 0.5 foot of the sample in the split-barrel sampler. The sample shall be broken in half and the thumb or penetrometer pushed into the end of the sample to determine the consistency. Do not determine consistency by attempting to penetrate a rock fragment. If the sample is decomposed rock, it is classified as a soft decomposed rock rather than a hard soil. Consistency shall not be determined solely by blow counts. One of the other methods shall be used in conjunction with it. The designations used to describe the consistency of cohesive soils are shown in Figure 2.

5.2.4 Weight Percentages

In nature, soils are comprised of particles of varying size and shape, and are combinations of the various grain types. The following terms are useful in the description of soil:

Terms of Identifying Proportion of the Component	Defining Range of Percentages by Weight
Trace	0 - 10 percent
Some	11 - 30 percent
Adjective form of the soil type (e.g., "sandy")	31 - 50 percent

FIGURE 2

CONSISTENCY FOR COHESIVE SOILS

Consistency	Standard Penetration Resistance (Blows per Foot)	Unconfined Compressive Strength (Tons/Sq. Foot by pocket penetration)	Field Identification
Very soft	0 to 2	Less than 0.25	Easily penetrated several inches by fist
Soft	2 to 4	0.25 to 0.50	Easily penetrated several inches by thumb
Medium stiff	4 to 8	0.50 to 1.0	Can be penetrated several inches by thumb with moderate effort
Stiff	8 to 15	1.0 to 2.0	Readily indented by thumb but penetrated only with great effort
Very stiff	15 to 30	2.0 to 4.0	Readily indented by thumbnail
Hard	Over 30	More than 4.0	Indented with difficulty by thumbnail

Examples:

- Silty fine sand: 50 to 69 percent fine sand, 31 to 50 percent silt.
- Medium to coarse sand, some silt: 70 to 80 percent medium to coarse sand, 11 to 30 percent silt.
- Fine sandy silt, trace clay: 50 to 68 percent silt, 31 to 49 percent fine sand, 1 to 10 percent clay.
- Clayey silt, some coarse sand: 70 to 89 percent clayey silt, 11 to 30 percent coarse sand.

5.2.5 Moisture

Moisture content is estimated in the field according to four categories: dry, moist, wet, and saturated. In dry soil, there appears to be little or no water. Saturated samples obviously have all the water they can hold. Moist and wet classifications are somewhat subjective and often are determined by the individual's judgment. A suggested parameter for this would be calling a soil wet if rolling it in the hand or on a porous surface liberates water, i.e., dirties or muddies the surface. Whatever method is adopted for describing moisture, it is important that the method used by an individual remains consistent throughout an entire drilling job.

Laboratory tests for water content shall be performed if the natural water content is important.

5.2.6 Stratification

Stratification can only be determined after the sample barrel is opened. The stratification or bedding thickness for soil and rock is depending on grain size and composition. The classification to be used for stratification description is shown in Figure 3.

5.2.7 Texture/Fabric/Bedding

The texture/fabric/bedding of the soil shall be described. Texture is described as the relative angularity of the particles: rounded, subrounded, subangular, and angular. Fabric shall be noted as to whether the particles are flat or bulky and whether there is a particular relation between particles (i.e., all the flat particles are parallel or there is some cementation). The bedding or structure shall also be noted (e.g., stratified, lensed, nonstratified, heterogeneous varved).

5.2.8 Summary of Soil Classification

In summary, soils shall be classified in a similar manner by each geologist/engineer at a project site. The hierarchy of classification is as follows:

- Density and/or consistency
- Color
- Plasticity (Optional)
- Soil types
- Moisture content
- Stratification
- Texture, fabric, bedding
- Other distinguishing features

FIGURE 3

BEDDING THICKNESS CLASSIFICATION

Thickness (metric)	Thickness (Approximate English Equivalent)	Classification
> 1.0 meter	> 3.3'	Massive
30 cm - 1 meter	1.0' - 3.3'	Thick Bedded
10 cm - 30 cm	4" - 1.0'	Medium Bedded
3 cm - 10 cm	1" - 4"	Thin Bedded
1 cm - 3 cm	2/5" - 1"	Very Thin Bedded
3 mm - 1 cm	1/8" - 2/5"	Laminated
1 mm - 3 mm	1/32" - 1/8"	Thinly Laminated
< 1 mm	<1/32"	Micro Laminated

(Weir, 1973 and Ingram, 1954)

5.3 Classification of Rocks

Rocks are grouped into three main divisions: sedimentary, igneous and metamorphic. Sedimentary rocks are by far the predominant type exposed at the earth's surface. The following basic names are applied to the types of rocks found in sedimentary sequences:

- Sandstone - Made up predominantly of granular materials ranging between 1/16 to 2 mm in diameter.
- Siltstone - Made up of granular materials less than 1/16 to 1/256 mm in diameter. Fractures irregularly. Medium thick to thick bedded.
- Claystone - Very fine-grained rock made up of clay and silt-size materials. Fractures irregularly. Very smooth to touch. Generally has irregularly spaced pitting on surface of drilled cores.
- Shale - A fissile very fine-grained rock. Fractures along bedding planes.
- Limestone - Rock made up predominantly of calcite ($CaCO_3$). Effervesces strongly upon the application of dilute hydrochloric acid.
- Coal - Rock consisting mainly of organic remains.
- Others - Numerous other sedimentary rock types are present in lesser amounts in the stratigraphic record. The local abundance of any of these rock types is dependent upon the depositional history of the area. Conglomerate, halite, gypsum, dolomite, anhydrite, lignite, etc. are some of the rock types found in lesser amounts.

In classifying a sedimentary rock the following hierarchy shall be noted:

- Rock type
- Color
- Bedding thickness
- Hardness
- Fracturing
- Weathering
- Other characteristics

5.3.1 Rock Type

As described above, there are numerous types of sedimentary rocks. In most cases, a rock will be a combination of several grain types, therefore, a modifier such as a sandy siltstone, or a silty sandstone can be used. The modifier indicates that a significant portion of the rock type is composed of the modifier. Other modifiers can include carbonaceous, calcareous, siliceous, etc.

Grain size is the basis for the classification of clastic sedimentary rocks. Figure 4 is the Udden-Wentworth classification that will be assigned to sedimentary rocks. The individual boundaries are slightly different than the USCS subdivision for soil classification. For field determination of grain sizes, a scale can be used for the coarse grained rocks. For example, the division between siltstone and claystone may not be measurable in the field. The boundary shall be determined by use of a hand lens. If the grains cannot be seen with the naked eye but are distinguishable with a hand lens, the rock is a siltstone. If the grains are not distinguishable with a hand lens, the rock is a claystone.

FIGURE 4

GRAIN SIZE CLASSIFICATION FOR ROCKS

Particle Name	Grain Size Diameter
Cobbles	> 64 mm
Pebbles	4 - 64 mm
Granules	2 - 4 mm
Very Coarse Sand	1 - 2 mm
Coarse Sand	0.5 - 1 mm
Medium Sand	0.25 - 0.5 mm
Fine Sand	0.125 - 0.25 mm
Very Fine Sand	0.0625 - 0.125 mm
Silt	0.0039 - 0.0625 mm

After Wentworth, 1922

5.3.2 Color

The color of a rock can be determined in a similar manner as for soil samples. Rock core samples shall be classified while wet, when possible, and air cored samples shall be scraped clean of cuttings prior to color classifications.

Rock color charts shall not be used unless specified by the Project Manager.

5.3.3 Bedding Thickness

The bedding thickness designations applied to soil classification (see Figure 3) will also be used for rock classification.

5.3.4 Hardness

The hardness of a rock is a function of the compaction, cementation, and mineralogical composition of the rock. A relative scale for sedimentary rock hardness is as follows:

- Soft - Weathered, considerable erosion of core, easily gouged by screwdriver, scratched by fingernail. Soft rock crushes or deforms under pressure of a pressed hammer. This term is always used for the hardness of the saprolite (decomposed rock which occupies the zone between the lowest soil horizon and firm bedrock).

- Medium soft - Slight erosion of core, slightly gouged by screwdriver, or breaks with crumbly edges from single hammer blow.

- Medium hard - No core erosion, easily scratched by screwdriver, or breaks with sharp edges from single hammer blow.

- Hard - Requires several hammer blows to break and has sharp conchoidal breaks. Cannot be scratched with screwdriver.

Note the difference in usage here of the works "scratch" and "gouge." A scratch shall be considered a slight depression in the rock (do not mistake the scraping off of rock flour from drilling with a scratch in the rock itself), while a gouge is much deeper.

5.3.5 Fracturing

The degree of fracturing or brokenness of a rock is described by measuring the fractures or joint spacing. After eliminating drilling breaks, the average spacing is calculated and the fracturing is described by the following terms:

- Very broken (V. BR.) - Less than 2-inch spacing between fractures
- Broken (BR.) - 2-inch to 1-foot spacing between fractures
- Blocky (BL.) - 1- to 3-foot spacing between fractures
- Massive (M.) - 3 to 10-foot spacing between fractures

The structural integrity of the rock can be approximated by calculating the Rock Quality Designation (RQD) of cores recovered. The RQD is determined by adding the total lengths of all pieces exceeding 4 inches and dividing by the total length of the coring run, to obtain a percentage.

Method of Calculating RQD
(After Deere, 1964)

$$RQD\ \% = r/l \times 100$$

r = Total length of all pieces of the lithologic unit being measured, which are greater than 4 inches length, and have resulted from natural breaks. Natural breaks include slickensides, joints, compaction slicks, bedding plane partings (not caused by drilling), friable zones, etc.

l = Total length of the coring run.

5.3.6 Weathering

The degree of weathering is a significant parameter that is important in determining weathering profiles and is also useful in engineering designs. The following terms can be applied to distinguish the degree of weathering:

- Fresh - Rock shows little or no weathering effect. Fractures or joints have little or no staining and rock has a bright appearance.
- Slight - Rock has some staining which may penetrate several centimeters into the rock. Clay filling of joints may occur. Feldspar grains may show some alteration.
- Moderate - Most of the rock, with exception of quartz grains, is stained. Rock is weakened due to weathering and can be easily broken with hammer.
- Severe - All rock including quartz grains is stained. Some of the rock is weathered to the extent of becoming a soil. Rock is very weak.

5.3.7 Other Characteristics

The following items shall be included in the rock description:

- Description of contact between two rock units. These can be sharp or gradational.
- Stratification (parallel, cross stratified).
- Description of any filled cavities or vugs.
- Cementation (calcareous, siliceous, hematitic).
- Description of any joints or open fractures.
- Observation of the presence of fossils.
- Notation of joints with depth, approximate angle to horizontal, any mineral filling or coating, and degree of weathering.

All information shown on the boring logs shall be neat to the point where it can be reproduced on a copy machine for report presentation. The data shall be kept current to provide control of the drilling program and to indicate various areas requiring special consideration and sampling.

5.3.8 Additional Terms Used in the Description of Rock

The following terms are used to further identify rocks:

- Seam - Thin (12 inches or less), probably continuous layer.
- Some - Indicates significant (15 to 40 percent) amounts of the accessory material. For example, rock composed of seams of sandstone (70 percent) and shale (30 percent) would be "sandstone -- some shale seams."
- Few - Indicates insignificant (0 to 15 percent) amounts of the accessory material. For example, rock composed of seam of sandstone (90 percent) and shale (10 percent) would be "sandstone -- few shale seams."
- Interbedded - Used to indicate thin or very thin alternating seams of material occurring in approximately equal amounts. For example, rock composed of thin alternating seams of sandstone (50 percent) and shale (50 percent) would be "interbedded sandstone and shale."
- Interlayered - Used to indicate thick alternating seams of material occurring in approximately equal amounts.

The preceding sections describe the classification of sedimentary rocks. The following are some basic names that are applied to igneous rocks:

- Basalt - A fine-grained extrusive rock composed primarily of calcic plagioclase and pyroxene.
- Rhyolite - A fine-grained volcanic rock containing abundant quartz and orthoclase. The fine-grained equivalent of a granite.
- Granite - A coarse-grained plutonic rock consisting essentially of alkali feldspar and quartz.
- Diorite - A coarse-grained plutonic rock consisting essentially of sodic plagioclase and hornblende.
- Gabbro - A coarse-grained plutonic rock consisting of calcic plagioclase and clinopyroxene. Loosely used for any coarse-grained dark igneous rock.

The following are some basic names that are applied to metamorphic rocks:

- Slate - A very fine-grained foliated rock possessing a well developed slaty cleavage. Contains predominantly chlorite, mica, quartz, and sericite.
- Phyllite - A fine-grained foliated rock that splits into thin flaky sheets with a silky sheen on cleavage surface.
- Schist - A medium to coarse-grained foliated rock with subparallel arrangement of the micaceous minerals which dominate its composition.
- Gneiss - A coarse-grained foliated rock with bands rich in granular and platy minerals.
- Quartzite - A fine- to coarse-grained nonfoliated rock breaking across grains, consisting essentially of quartz sand with silica cement.

5.4 Abbreviations

Abbreviations may be used in the description of a rock or soil. However, they shall be kept at a minimum. Following are some of the abbreviations that may be used:

C	-	Coarse	Lt	-	Light	Yl	-	Yellow
Med	-	Medium	BR	-	Broken	Or	-	Orange
F	-	Fine	BL	-	Blocky	SS	-	Sandstone
V	-	Very	M	-	Massive	Sh	-	Shale
Sl	-	Slight	Br	-	Brown	LS	-	Limestone
Occ	-	Occasional	Bl	-	Black	Fgr	-	Fine-grained
Tr	-	Trace						

5.5 Boring Logs and Documentation

This section describes in more detail the procedures to be used in completing boring logs in the field. Information obtained from the preceding sections shall be used to complete the logs. A sample boring log has been provided as Figure 5.

The field geologist/engineer shall use this example as a guide in completing each boring log. Each boring log shall be fully described by the geologist/engineer as the boring is being drilled. Every sheet contains space for 25 feet of log. Information regarding classification details is provided either on the back of the boring log or on a separate sheet, for field use.

5.5.1 Soil Classification

- Identify site name, boring number, job number, etc. Elevations and water level data to be entered when surveyed data is available.

- Enter sample number (from SPT) under appropriate column. Enter depth sample was taken from (1 block = 1 foot). Fractional footages, i.e., change of lithology at 13.7 feet, shall be lined off at the proportional location between the 13- and 14-foot marks. Enter blow counts (Standard Penetration Resistance) diagonally (as shown). Standard penetration resistance is covered in Section 5.2.3.

- Determine sample recovery/sample length as shown. Measure the total length of sample recovered from the split-spoon sampler, including material in the drive shoe. Do not include cuttings or wash material that may be in the upper portion of the sample tube.

- Indicate any change in lithology by drawing a line at the appropriate depth. For example, if clayey silt was encountered from 0 to 5.5 feet and shale from 5.5 to 6.0 feet, a line shall be drawn at this increment. This information is helpful in the construction of cross-sections. As an alternative, symbols may be used to identify each change in lithology.

- The density of granular soils is obtained by adding the number of blows for the last two increments. Refer to Density of Granular Soils Chart on back of log sheet. For consistency of cohesive soils refer also to the back of log sheet - Consistency of Cohesive Soils. Enter this information under the appropriate column. Refer to Section 5.2.3.

FIGURE 5
COMPLETED BORING LOG (EXAMPLE)

BORING LOG

Page 1 of 1

PROJECT NAME: NSB- SITE
PROJECT NUMBER: 9594
DRILLING COMPANY: SOILTEST CO.
DRILLING RIG: CME-55
BORING NUMBER: SB/MW 1
DATE: 3/8/96
GEOLOGIST: SJ CONTI
DRILLER: R. ROCK

Sample No. and Type or RQD	Depth (Ft.) or Run No.	Blows / 6" or RQD (%)	Sample Recovery / Sample Length	Lithology Change (Depth/Ft.) or Screened Interval	Soil Density/ Consistency or Rock Hardness	Color	Material Classification	USCS *	Remarks	PID/FID Reading (ppm) Sample	Sampler BZ	Borehole**	Driller BZ**
S-1 @ 0800	0.0	7/6	1.5/2.0		M DENSE	BRN TO BLK	SILTY SAND - SOME ROCK FR.: TR BRICKS (FILL)	SM	MOIST SL. ORG. ODOR FILL TO 4'±	5	0	0	0
	2.0	9/10											
	4.0			4.0									
S-2 @ 0810	6.0	5/7 9/8	2.0/2.0	7' ▽	M DENSE	BRN	SILTY SAND - TR FINE GRAVEL	SM	MOIST - W ODOR NAT. MATL. TOOK SAMPLE SB01-0406 FOR ANALYSIS	10	0	-	-
	8.0			8.0									
S-3 @ 0820	10.0	6/8 17/16	1.9/2.0		DENSE	TAN BRN	FINE TO COARSE SAND TR. F. GRAVEL	SW	WET HIT WATER ≈ 7'±	0	0	0	0
	12.0			12.0									
S-4 @ 0830	14.0	7/6 5/8	1.6/2.0		STIFF	GRAY	SILTY CLAY	CL	MOIST → WET	0	.5	-	-
	15.0			15.0					AUGER REF @ 15'				
9/5	①		4.0/5.0	16	M HARD	BRN	SILTSTONE	VBR	WEATHERED LO ∡JNTS @ 15.5 WATER STAINS @ 16.5, 17.1, 17.5	0	0	0	0
				19'					LOSING SOME				
4.9/5.0	20.0 ②		5.0/5.0		HARD	GRAY	SANDSTONE - SOME SILTSTONE	BR	DRILL H2O @ 17'± SET TEMP 6" CAS TO 15.5 SET 2"Φ PVC SCREEN 16-25	0	0	0	0
									SAND 14-25				
	25.0			25					PELLETS 12-14				

* When rock coring, enter rock brokeness.

** Include monitor reading in 6 foot intervals @ borehole. Increase reading frequency if elevated response read.

• 1-20Z 1-80Z

Drilling Area Background (ppm): 0

Remarks: CME-55 R16, 4¼" ID HSA - 9" OD ±
2" SPLIT SPOONS - 140 LB HAMMER - 30" DROP
NX CORE IN BEDROCK RUN ① = 25 min, RUN ② = 15 min

Converted to Well: Yes ✓ No _____ Well I.D. #: MW-1

- Enter color of the material in the appropriate column.

- Describe material using the USCS. Limit this column for sample description only. The predominant material is described last. If the primary soil is silt but has fines (clay) - use clayey silt. Limit soil descriptors to the following:

  - Trace: 0 - 10 percent
  - Some: 11 - 30 percent
  - And/Or: 31 - 50 percent

- Also indicate under Material Classification if the material is fill or natural soils. Indicate roots, organic material, etc.

- Enter USCS symbol - use chart on back of boring log as a guide. If the soils fall into one of two basic groups, a borderline symbol may be used with the two symbols separated by a slash. For example ML/CL or SM/SP.

- The following information shall be entered under the "Remarks" column and shall include, but is not limited by, the following:

  - Moisture - estimate moisture content using the following terms - dry, moist, wet and saturated. These terms are determined by the individual. Whatever method is used to determine moisture, be consistent throughout the log.

  - Angularity - describe angularity of coarse grained particles using the terms angular, subangular, subrounded, or rounded. Refer to ASTM D 2488 or Earth Manual for criteria for these terms.

  - Particle shape - flat, elongated, or flat and elongated.

  - Maximum particle size or dimension.

  - Water level observations.

  - Reaction with HCl - none, weak, or strong.

- Additional comments:

  - Indicate presence of mica, caving of hole, when water was encountered, difficulty in drilling, loss or gain of water.

  - Indicate odor and Photoionization Detector (PID) or Flame Ionization Detector (FID) reading if applicable.

  - Indicate any change in lithology by drawing a line through the lithology change column and indicate the depth. This will help when cross-sections are subsequently constructed.

  - At the bottom of the page indicate type of rig, drilling method, hammer size and drop, and any other useful information (i.e., borehole size, casing set, changes in drilling method).

- Vertical lines shall be drawn (as shown in Figure 5) in columns 6 to 8 from the bottom of each sample to the top of the next sample to indicate consistency of material from sample to sample, if the material is consistent. Horizontal lines shall be drawn if there is a change in lithology, then vertical lines drawn to that point.

- Indicate screened interval of well, as needed, in the lithology column. Show top and bottom of screen. Other details of well construction are provided on the well construction forms.

5.5.2 Rock Classification

- Indicate depth at which coring began by drawing a line at the appropriate depth. Indicate core run depths by drawing coring run lines (as shown) under the first and fourth columns on the log sheet. Indicate RQD, core run number, RQD percent, and core recovery under the appropriate columns.

- Indicate lithology change by drawing a line at the appropriate depth as explained in Section 5.5.1.

- Rock hardness is entered under designated column using terms as described on the back of the log or as explained earlier in this section.

- Enter color as determined while the core sample is wet; if the sample is cored by air, the core shall be scraped clean prior to describing color.

- Enter rock type based on sedimentary, igneous or metamorphic. For sedimentary rocks use terms as described in Section 5.3. Again, be consistent in classification. Use modifiers and additional terms as needed. For igneous and metamorphic rock types use terms as described in Sections 5.3.8.

- Enter brokenness of rock or degree of fracturing under the appropriate column using symbols VBR, BR, BL, or M as explained in Section 5.3.5 and as noted on the back of the Boring Log.

- The following information shall be entered under the remarks column. Items shall include but are not limited to the following:

  - Indicate depths of joints, fractures and breaks and also approximate to horizontal angle (such as high, low), i.e., 70° angle from horizontal, high angle.
  - Indicate calcareous zones, description of any cavities or vugs.
  - Indicate any loss or gain of drill water.
  - Indicate drop of drill tools or change in color of drill water.

- Remarks at the bottom of Boring Log shall include:

  - Type and size of core obtained.
  - Depth casing was set.
  - Type of rig used.

- As a final check the boring log shall include the following:

  - Vertical lines shall be drawn as explained for soil classification to indicate consistency of bedrock material.

  - If applicable, indicate screened interval in the lithology column. Show top and bottom of screen. Other details of well construction are provided on the well construction forms.

5.5.3 Classification of Soil and Rock from Drill Cuttings

The previous sections describe procedures for classifying soil and rock samples when cores are obtained. However, some drilling methods (air/mud rotary) may require classification and borehole logging based on identifying drill cuttings removed from the borehole. Such cuttings provide only general information on subsurface lithology. Some procedures that shall be followed when logging cuttings are:

- Obtain cutting samples at approximately 5-foot intervals, sieve the cuttings (if mud rotary drilling) to obtain a cleaner sample, place the sample into a small sample bottle or "zip lock" bag for future reference, and label the jar or bag (i.e. hole number, depth, date, etc.). Cuttings shall be closely examined to determine general lithology.
- Note any change in color of drilling fluid or cuttings, to estimate changes in lithology.
- Note drop or chattering of drilling tools or a change in the rate of drilling, to determine fracture locations or lithologic changes.
- Observe loss or gain of drilling fluids or air (if air rotary methods are used), to identify potential fracture zones.
- Record this and any other useful information onto the boring log as provided in Figure 1.

This logging provides a general description of subsurface lithology and adequate information can be obtained through careful observation of the drilling process. It is recommended that split-barrel and rock core sampling methods be used at selected boring locations during the field investigation to provide detailed information to supplement the less detailed data generated through borings drilled using air/mud rotary methods.

5.6 Review

Upon completion of the borings logs, copies shall be made and reviewed. Items to be reviewed include:

- Checking for consistency of all logs.
- Checking for conformance to the guideline.
- Checking to see that all information is entered in their respective columns and spaces.

6.0 REFERENCES

Unified Soil Classification System (USCS).

ASTM D2488, 1985.

Earth Manual, U.S. Department of the Interior, 1974.

7.0 RECORDS

Originals of the boring logs shall be retained in the project files.

TABLE OF CONTENTS

SECTION **PAGE**

1.0 PURPOSE **2**

2.0 SCOPE **2**

3.0 GLOSSARY **2**

4.0 RESPONSIBILITIES **3**

5.0 PROCEDURES **3**

5.1 BURIED UTILITIES 3
5.2 OVERHEAD POWER LINES 5

6.0 UNDERGROUND LOCATING TECHNIQUES **5**

6.1 GEOPHYSICAL METHODS 5
6.2 PASSIVE DETECTION SURVEYS 6
6.3 INTRUSIVE DETECTION SURVEYS 6

7.0 INTRUSIVE ACTIVITIES SUMMARY **7**

8.0 REFERENCES **8**

ATTACHMENTS

1 Listing of Underground Utility Clearance Resources 9
2 Frost Line Penetration Depths by Geographic Location 11
3 Utility Clearance Form 12
4 OSHA Letter of Interpretation 13

1.0 PURPOSE

Utilities such as electric service lines, natural or propane gas lines, water and sewage lines, telecommunications, and steam lines are very often in the immediate vicinity of work locations. Contact with underground or overhead utilities can have serious consequences including employee injury/fatality, property and equipment damage, substantial financial impacts, and loss of utility service to users.

The purpose of this procedure is to provide minimum requirements and technical guidelines regarding the appropriate procedures to be followed when performing subsurface and overhead utility locating services. It is the policy of Tetra Tech NUS, Inc. (TtNUS) to provide a safe and healthful work environment for the protection of our employees. The purpose of this Standard Operating Procedure (SOP) is to aid in achieving the objectives of this policy, to present the acceptable procedures pertaining to utility locating and excavation clearance activities, and to present requirements and restrictions relevant to these types of activities. This SOP must be reviewed by any employee potentially involved with underground or overhead utility locating and avoidance activities.

2.0 SCOPE

This procedure applies to all TtNUS field activities where there may be potential contact with underground or overhead utilities. This procedure provides a description of the principles of operation, instrumentation, applicability, and implementability of typical methods used to determine the presence and avoidance of contact with utility services. This procedure is intended to assist with work planning and scheduling, resource planning, field implementation, and subcontractor procurement. Utility locating and excavation clearance requires site-specific information prior to the initiation of any such activities on a specific project. This SOP is not intended to provide a detailed description of methodology and instrument operation. Specialized expertise during both planning and execution of several of the methods presented may also be required.

3.0 GLOSSARY

Electromagnetic Induction (EMI) Survey - A geophysical exploration method whereby electromagnetic fields are induced in the ground and the resultant secondary electromagnetic fields are detected as a measure of ground conductivity.

Magnetometer – A device used for precise and sensitive measurements of magnetic fields.

Magnetic Survey – A geophysical survey method that depends on detection of magnetic anomalies caused by the presence of buried ferromagnetic objects.

Metal Detection – A geophysical survey method that is based on electromagnetic coupling caused by underground conductive objects.

Vertical Gradiometer – A magnetometer equipped with two sensors that are vertically separated by a fixed distance. It is best suited to map near surface features and is less susceptible to deep geologic features.

Ground Penetrating Radar – Ground Penetrating Radar (GPR) involves specialized radar equipment whereby a signal is sent into the ground via a transmitter. Some portion of the signal will be reflected from the subsurface material, which is then recorded with a receiver and electronically converted into a graphic picture.

4.0 RESPONSIBILITIES

Project Manager (PM)/Task Order Manager (TOM) - Responsible for ensuring that all field activities are conducted in accordance with this procedure.

Site Manager (SM)/Field Operations Leader (FOL) - Responsible for the onsite verification that all field activities are performed in compliance with approved SOPs or as otherwise directed by the approved project plan(s).

Site Health & Safety Officer (SHSO) – Responsible to provide technical assistance and verify full compliance with this SOP. The SHSO is also responsible for reporting any deficiencies to the Corporate Health and Safety Manager (HSM) and to the PM/TOM.

Health & Safety Manager (HSM) – Responsible for preparing, implementing, and modifying corporate health and safety policy and this SOP.

Site Personnel – Responsible for performing their work activities in accordance with this SOP and the TtNUS Health and Safety Policy.

5.0 PROCEDURES

This procedure addresses the requirements and technical procedures that must be performed to minimize the potential for contact with underground and overhead utility services. These procedures are addressed individually from a buried and overhead standpoint.

5.1 Buried Utilities

Buried utilities present a heightened concern because their location is not typically obvious by visual observation, and it is common that their presence and/or location is unknown or incorrectly known on client properties. This procedure must be followed prior to beginning any subsurface probing or excavation that might potentially be in the vicinity of underground utility services. In addition, the Utility Clearance Form (Attachment 3) must be completed for every location or cluster of locations where intrusive activities will occur.

Where the positive identification and de-energizing of underground utilities cannot be obtained and confirmed using the following steps, the PM/TOM is responsible for arranging for the procurement of a qualified, experienced, utility locating subcontractor who will accomplish the utility location and demarcation duties specified herein.

1. A comprehensive review must be made of any available property maps, blue lines, or as-builts prior to site activities. Interviews with local personnel familiar with the area should be performed to provide additional information concerning the location of potential underground utilities. Information regarding utility locations shall be added to project maps upon completion of this exercise.

2., A visual site inspection must be performed to compare the site plan information to actual field conditions. Any findings must be documented and the site plan/maps revised. The area(s) of proposed excavation or other subsurface activities must be marked at the site in white paint or pin flags to identify those locations of the proposed intrusive activities. The site inspection should focus on locating surface indications of potential underground utilities. Items of interest include the presence of nearby area lights, telephone service, drainage grates, fire hydrants, electrical service vaults/panels, asphalt/concrete scares and patches, and topographical depressions. Note the location of any emergency shut off switches. Any additional information regarding utility

locations shall be added to project maps upon completion of this exercise and returned to the PM/TOM.

3. If the planned work is to be conducted on private property (e.g., military installations, manufacturing facilities, etc.) the FOL must identify and contact appropriate facility personnel (e.g., public works or facility engineering) before any intrusive work begins to inquire about (and comply with) property owner requirements. It is important to note that private property owners may require several days to several weeks advance notice prior to locating utilities.

4. If the work location is on public property, the state agency that performs utility clearances must be notified (see Attachment 1). State "one-call" services must be notified prior to commencing fieldwork per their requirements. Most one-call services require, by law, 48- to 72-hour advance notice prior to beginning any excavation. Such services typically assign a "ticket" number to the particular site. This ticket number must be recorded for future reference and is valid for a specific period of time, but may be extended by contacting the service again. The utility service will notify utility representatives who then mark their respective lines within the specified time frame. It should be noted that most military installations own their own utilities but may lease service and maintenance from area providers. Given this situation, "one call" systems may still be required to provide location services on military installations.

5. Utilities must be identified and their locations plainly marked using pin flags, spray paint, or other accepted means. The location of all utilities must be noted on a field sketch for future inclusion on project maps. Utility locations are to be identified using the following industry-standard color code scheme, unless the property owner or utility locator service uses a different color code:

white	excavation/subsurface investigation location
red	electrical
yellow	gas, oil, steam
orange	telephone, communications
blue	water, irrigation, slurry
green	sewer, drain

6. Where utility locations are not confirmed with a high degree of confidence through drawings, schematics, location services, etc., the work area must be thoroughly investigated prior to beginning the excavation. In these situations, utilities must be identified using safe and effective methods such as passive and intrusive surveys, or the use of non-conductive hand tools. Also, in situations where such hand tools are used, they should always be used in conjunction with suitable detection equipment, such as the items described in Section 6.0 of this SOP. Each method has advantages and disadvantages including complexity, applicability, and price. It also should be noted that in some states, initial excavation is required by hand to a specified depth.

7. At each location where trenching or excavating will occur using a backhoe or other heavy equipment, and where utility identifications and locations cannot be confirmed prior to groundbreaking, the soil must be probed using a device such as a tile probe which is made of non-conductive material such as fiberglass. If these efforts are not successful in clearing the excavation area of suspect utilities, hand shoveling must be performed for the perimeter of the intended excavation.

8. All utilities uncovered or undermined during excavation must be structurally supported to prevent potential damage. Unless necessary as an emergency corrective measure, TtNUS shall not make any repairs or modifications to existing utility lines without prior permission of the utility owner, property owner, and Corporate HSM. All repairs require that the line be locked-out/tagged-out prior to work.

5.2 Overhead Power Lines

If it is necessary to work within the minimum clearance distance of an overhead power line, the overhead line must be de-energized and grounded, or re-routed by the utility company or a registered electrician. If protective measures such as guarding, isolating, or insulating are provided, these precautions must be adequate to prevent employees from contacting such lines directly with any part of their body or indirectly though conductive materials, tools, or equipment.

The following table provides the required minimum clearances for working in proximity to overhead power lines.

Nominal Voltage	Minimum Clearance
0 -50 kV	10 feet, or one mast length; whichever is greater
50+ kV	10 feet plus 4 inches for every 10 kV over 50 kV or 1.5 mast lengths; whichever is greater

6.0 UNDERGROUND LOCATING TECHNIQUES

A variety of supplemental utility locating approaches are available and can be applied when additional assurance is needed. The selection of the appropriate method(s) to employ is site-specific and should be tailored to the anticipated conditions, site and project constraints, and personnel capabilities.

6.1 Geophysical Methods

Geophysical methods include electromagnetic induction, magnetics, and ground penetrating radar. Additional details concerning the design and implementation of electromagnetic induction, magnetics, and ground penetrating radar surveys can be found in one or more of the TtNUS SOPs included in the References (Section 8.0).

Electromagnetic Induction

Electromagnetic Induction (EMI) line locators operate either by locating a background signal or by locating a signal introduced into the utility line using a transmitter. A utility line acts like a radio antenna, producing electrons, which can be picked up with a radiofrequency receiver. Electrical current carrying conductors have a 60HZ signal associated with them. This signal occurs in all power lines regardless of voltage. Utilities in close proximity to power lines or used as grounds may also have a 60HZ signal, which can be picked up with an EM receiver. A typical example of this type of geophysical equipment is an EM-61.

EMI locators specifically designed for utility locating use a special signal that is either indirectly induced onto a utility line by placing the transmitter above the line or directly induced using an induction clamp. The clamp induces a signal on the specific utility and is the preferred method of tracing since there is little chance of the resulting signals being interfered with. A good example of this type of equipment is the Schonstedt® MAC-51B locator. The MAC-51B performs inductively traced surveys, simple magnetic locating, and traced nonmetallic surveys.

When access can be gained inside a conduit to be traced, a flexible insulated trace wire can be used. This is very useful for non-metallic conduits but is limited by the availability of gaining access inside the pipe.

Magnetics

Magnetic locators operate by detecting the relative amounts of buried ferrous metal. They are incapable of locating or identifying nonferrous utility lines but can be very useful for locating underground storage tanks (UST's), steel utility lines, and buried electrical lines. A typical example of this type of equipment is the Schonstedt® GA-52Cx locator. The GA-52Cx is capable of locating 4-inch steel pipe up to 8 feet deep.

Non-ferrous lines are often located by using a typical plumbing tool (snake) fed through the line. A signal is then introduced to the snake that is then traced.

Ground Penetrating Radar

Ground Penetrating Radar (GPR) involves specialized radar equipment whereby a signal is sent into the ground via a transmitter. Some portion of the signal will be reflected from the subsurface material, which is then recorded with a receiver and electronically converted into a graphic picture. In general, an object which is harder than the surrounding soil will reflect a stronger signal. Utilities, tunnels, UST's, and footings will reflect a stronger signal than the surrounding soil. Although this surface detection method may determine the location of a utility, this method does not specifically identify utilities (i.e., water vs. gas, electrical vs. telephone); hence, verification may be necessary using other methods. This method is somewhat limited when used in areas with clay soil types or with a high water table.

6.2 Passive Detection Surveys

Acoustic Surveys

Acoustic location methods are generally most applicable to waterlines or gas lines. A highly sensitive Acoustic Receiver listens for background sounds of water flowing (at joints, leaks, etc.) or to sounds introduced into the water main using a transducer. Acoustics may also be applicable to determine the location of plastic gas lines.

Thermal Imaging

Thermal (i.e., infrared) imaging is a passive method for detecting the heat emitted by an object. Electronics in the infrared camera convert subtle heat differentials into a visual image on the viewfinder or a monitor. The operator does not look for an exact temperature; rather they look for heat anomalies (either elevated or suppressed temperatures) characteristic of a potential utility line.

The thermal fingerprint of underground utilities results from differences in temperature between the atmosphere and the fluid present in a pipe or the heat generated by electrical resistance. In addition, infrared scanners may be capable of detecting differences in the compaction, temperature and moisture content of underground utility trenches. High-performance thermal imagery can detect temperature differences to hundredths of a degree.

6.3 Intrusive Detection Surveys

Vacuum Excavation

Vacuum excavation is used to physically expose utility services. The process involves removing the surface material over approximately a 1' x 1' area at the site location. The air-vacuum process proceeds with the simultaneous action of compressed air-jets to loosen soil and vacuum extraction of the resulting

debris. This process ensures the integrity of the utility line during the excavation process, as no hammers, blades, or heavy mechanical equipment comes into contact with the utility line, eliminating the risk of damage to utilities. The process continues until the utility is uncovered. Vacuum excavation can be used at the proposed site location to excavate below the "utility window" which is usually 8 feet.

Hand Excavation

When the identification and location of underground utilities cannot be positively confirmed through document reviews and/or other methods, borings and excavations may be cleared via the use of non-conductive hand tools. This should always be done in conjunction with the use of detection equipment. This would be required for all locations where there is a potential to impact buried utilities. The minimum hand-excavation depth that must be reached is to be determined considering the geographical location of the work site. This approach recognizes that the placement of buried utilities is influenced by frost line depths that vary by geographical region. Attachment 2 presents frost line depths for the regions of the contiguous United States. At a minimum, hand excavation depths must be at least to the frost line depth (see Attachment 2) plus two (2) feet, but never less than 4 feet below ground surface (bgs). For hand excavation, the hole created must be reamed large enough to be at least the diameter of the drill rig auger or bit prior to drilling. For soil gas surveys, the survey probe shall be placed as close as possible to the cleared hand excavation. It is important to note that a post-hole digger must not be used in this type of hand excavation activity.

Tile Probe Surveys

For some soil types, site conditions, and excavation requirements, non-conductive tile probes may be used. A tile probe is a "T"-handled rod of varying lengths that can be pushed into the soil to determine if any obstructions exist at that location. Tile probes constructed of fiberglass or other nonconductive material are readily-available from numerous vendors. Tile probes must be performed to the same depth requirements as previously specified. As with other types of hand excavating activities, the use of a non-conductive tile probe, should always be in conjunction with suitable utility locating detection equipment.

7.0 INTRUSIVE ACTIVITIES SUMMARY

The following list summarizes the activities that must be performed prior to beginning subsurface activities:

1. Map and mark all subsurface locations and excavation boundaries using white paint or markers specified by the client or property owner.

2. Notify the property owner and/or client that the locations are marked. At this point, drawings of locations or excavation boundaries shall be provided to the property owner and/or client so they may initiate (if applicable) utility clearance.

   Note: Drawings with confirmed locations should be provided to the property owner and/or client as soon as possible to reduce potential time delays.

3. Notify "One Call" service. If possible, arrange for an appointment to show the One Call representative the surface locations or excavation boundaries in person. This will provide a better location designation to the utilities they represent. You should have additional drawings should you need to provide plot plans to the One Call service.

4. Implement supplemental utility detection techniques as necessary and appropriate to conform utility locations or the absence thereof.

5. Complete Attachment 3, Utility Clearance Form. This form should be completed for each excavation location. In situations where multiple subsurface locations exist within the close proximity of one another, one form may be used for multiple locations provided those locations are noted on the Utility Clearance Form. Upon completion, the Utility Clearance Form and revised/annotated utility location map becomes part of the project file.

8.0 REFERENCES

OSHA Letter of Interpretation, Mr. Joseph Caldwell, Attachment 4
OSHA 29 CFR 1926(b)(2)
OSHA 29 CFR 1926(b)(3)
TtNUS Utility Locating and Clearance Policy
TtNUS SOP GH-3.1; Resistivity and Electromagnetic Induction
TtNUS SOP GH-3.2; Magnetic and Metal Detection Surveys
TtNUS SOP GH-3.4; Ground-penetrating Radar Surveys

ATTACHMENT 1
LISTING OF UNDERGROUND UTILITY CLEARANCE RESOURCES

American Public Works Association
2345 Grand Boulevard, Suite 500, Kansas City, MO 64108-2625
Phone (816) 472-6100 • Fax (816) 472-1610
Web www.apwa.net • E-mail apwa@apwa.net

ONE-CALL SYSTEMS INTERNATIONAL CONDENSED DIRECTORY

Alabama
Alabama One-Call
1-800-292-8525

Alaska
Locate Call Center of Alaska, Inc.
1-800-478-3121

Arizona
Arizona Blue Stake
1-800-782-5348

Arkansas
Arkansas One Call System, Inc.
1-800-482-8998

California
Underground Service Alert North
1-800-227-2600
Underground Service Alert of Southern California
1-800-227-2600

Colorado
Utility Notification Center of Colorado
1-800-922-1987

Connecticut
Call Before You Dig
1-800-922-4455

Delaware
Miss Utility of Delmarva
1-800-282-8555

Florida
Sunshine State One-Call of Florida, Inc.
1-800-432-4770

Georgia
Underground Protection Center, Inc.
1-800-282-7411

Hawaii
Underground Service Alert North
1-800-227-2600

Idaho
Dig Line Inc.
1-800-342-1585
Kootenai County One-Call
1-800-428-4950
Shoshone - Benewah One-Call
1-800-398-3285

Illinois
JULIE, Inc.
1-800-892-0123
Digger (Chicago Utility Alert Network)
312-744-7000

Indiana
Indiana Underground Plant Protection Service
1-800-382-5544

Iowa
Iowa One-Call
1-800-292-8989

Kansas
Kansas One-Call System, Inc.
1-800-344-7233

Kentucky
Kentucky Underground Protection Inc.
1-800-752-6007

Louisiana
Louisiana One Call System, Inc.
1-800-272-3020

Maine
Dig Safe System, Inc.
1-888-344-7233

Maryland
Miss Utility
1-800-257-7777
Miss Utility of Delmarva
1-800-282-8555

Massachusetts
Dig Safe System, Inc.
1-888-344-7233

Michigan
Miss Dig System, Inc.
1-800-482-7171

Minnesota
Gopher State One Call
1-800-252-1166

Mississippi
Mississippi One-Call System, Inc
1-800-227-6477

Missouri
Missouri One-Call System, Inc.
1-800-344-7483

Montana
Utilities Underground Protection Center
1-800-424-5555
Montana One Call Center
1-800-551-8344

Nebraska
Diggers Hotline of Nebraska
1-800-331-5666

Nevada
Underground Service Alert North
1-800-227-2600

New Hampshire
Dig Safe System, Inc.
1-888-344-7233

New Jersey
New Jersey One Call
1-800-272-1000

New Mexico
New Mexico One Call System, Inc.
1-800-321-2537
Las Cruces- Dona Ana Blue Stakes
1-888-526-0400

New York
Dig Safely New York
1-800-962-7962
New York City- Long Island One Call Center
1-800-272-4480

North Carolina
The North Carolina One-Call Center, Inc.
1-800-632-4949

North Dakota
North Dakota One-Call
1-800-795-0555

Ohio
Ohio Utilities Protection Service
1-800-362-2764
Oil & Gas Producers Underground Protect'n Svc
1-800-925-0988

Oklahoma
Call Okie
1-800-522-6543

Oregon
Oregon Utility Notification Center/One Call Concepts
1-800-332-2344

Pennsylvania
Pennsylvania One Call System, Inc.
1-800-242-1776

Rhode Island
Dig Safe System, Inc.
1-888-344-7233

South Carolina
Palmetto Utility Protection Service Inc.
1-888-721-7877

South Dakota
South Dakota One Call
1-800-781-7474

Tennessee
Tennessee One-Call System, Inc.
1-800-351-1111

ATTACHMENT 1 (Continued)

Texas
Texas One Call System
1-800-245-4545
Texas Excavation Safety System, Inc.
1-800-344-8377
Lone Star Notification Center
1-800-669-8344

Utah
Blue Stakes of Utah
1-800-662-4111

Vermont
Dig Safe System, Inc.
1-888-344-7233

Virginia
Miss Utility of Virginia
1-800-552-7001
Miss Utility (Northern Virginia)
1-800-257-7777

Washington
Utilities Underground Location Center
1-800-424-5555
Northwest Utility Notification Center
1-800-553-4344
Inland Empire Utility Coordinating Council
509-456-8000

West Virginia
Miss Utility of West Virginia, Inc.
1-800-245-4848

Wisconsin
Diggers Hotline, Inc.
1-800-242-8511

Wyoming
Wyoming One-Call System, Inc.
1-800-348-1030
Call Before You Dig of Wyoming
1-800-849-2476

District of Columbia
Miss Utility
1-800-257-7777

Alberta
Alberta One-Call Corporation
1-800-242-3447

British Columbia
BC One Call
1-800-474-6886

Ontario
Ontario One-Call System
1-800-400-2255

Quebec
Info-Excavation
1-800-663-9228

ATTACHMENT 2

FROST LINE PENETRATION DEPTHS BY GEOGRAPHIC LOCATION

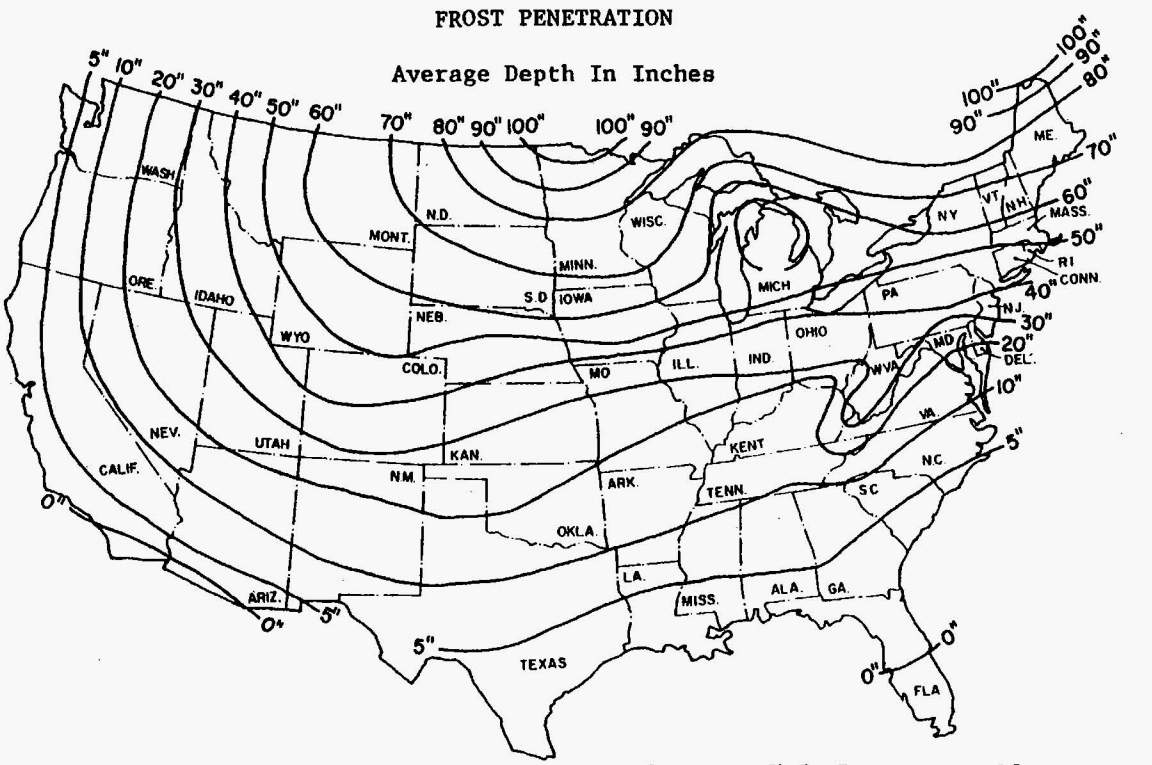

Courtesy U.S. Department Of Commerce

ATTACHMENT 3
UTILITY CLEARANCE FORM

Client: _____ Project Name: _____

Project No.: _____ Completed By: _____

Location Name: _____ Work Date: _____

Excavation Method/Overhead Equipment: _____

1. Underground Utilities — Circle One

a)	Review of existing maps?	yes	no	N/A
b)	Interview local personnel?	yes	no	N/A
c)	Site visit and inspection?	yes	no	N/A
d)	Excavation areas marked in the field?	yes	no	N/A
e)	Utilities located in the field?	yes	no	N/A
f)	Located utilities marked/added to site maps?	yes	no	N/A
g)	Client contact notified Name _____ Telephone: _____ Date: _____	yes	no	N/A
g)	State One-Call agency called? Caller: _____ Ticket Number: _____ Date: _____	yes	no	N/A
h)	Geophysical survey performed? Survey performed by: _____ Method: _____ Date: _____	yes	no	N/A
i)	Hand excavation performed (with concurrent use of utility detection device)? Completed by: _____ Total depth: _____ feet Date: _____	yes	no	N/A
j)	Trench/excavation probed? Probing completed by: _____ Depth/frequency: _____ Date: _____	yes	no	N/A

2. Overhead Utilities — Present Absent

a)	Determination of nominal voltage	yes	no	N/A
b)	Marked on site maps	yes	no	N/A
c)	Necessary to lockout/insulate/re-route	yes	no	N/A
d)	Document procedures used to lockout/insulate/re-route	yes	no	N/A
e)	Minimum acceptable clearance (SOP Section 5.2): _____			

3. Notes:

_____

_____

_____

Approval:

_____ _____

Site Manager/Field Operations Leader Date

c: PM/Project File
Program File

ATTACHMENT 4
OSHA LETTER OF INTERPRETATION

Mr. Joseph Caldwell
Consultant
Governmental Liaison
Pipeline Safety Regulations
211 Wilson Boulevard
Suite 700
Arlington, Virginia 22201

Re: Use of hydro-vacuum or non-conductive hand tools to locate underground utilities.

Dear Mr. Caldwell:

In a letter dated July 7, 2003, we responded to your inquiry of September 18, 2002, regarding the use of hydro-vacuum equipment to locate underground utilities by excavation. After our letter to you was posted on the OSHA website, we received numerous inquiries that make it apparent that aspects of our July 7 letter are being misunderstood. In addition, a number of industry stakeholders, including the National Utility Contractors Association (NUCA), have provided new information regarding equipment that is available for this work.

To clarify these issues, we are withdrawing our July 7 letter and issuing this replacement response to your inquiry.

Question: *Section 1926.651 contains several requirements that relate to the safety of employees engaged in excavation work. Specifically, paragraphs (b)(2) and (b)(3) relate in part to the safety of the means used to locate underground utility installations that, if damaged during an uncovering operation, could pose serious hazards to employees.*

Under these provisions, what constitutes an acceptable method of uncovering underground utility lines, and further, would the use of hydro-vacuum excavation be acceptable under the standard?

Answer

Background

Two sections of 29 CFR 1926 Subpart P (Excavations), 1926.651(Specific excavation requirements), govern methods for uncovering underground utility installations. Specifically, paragraph (b)(2) states:

> When utility companies or owners cannot respond to a request to locate underground utility installations within 24 hours * * * or cannot establish the exact location of these installations, the employer may proceed, provided the employer does so with caution, and provided detection equipment or other acceptable means to locate utility installations are used. (emphasis added).

Paragraph (b)(3) provides:

ATTACHMENT 4 (Continued)

> When excavation operations approach the estimated location of underground installations, the exact location of the installations shall be determined by safe and acceptable means. (emphasis added).

Therefore, "acceptable means" must be used where the location of the underground utilities have not been identified by the utility companies and detection equipment is not used.

Subpart P does not contain a definition of either "other acceptable means" or "safe and acceptable means." The preambles to both the proposed rule and the final rule discussed the rationale behind the wording at issue. For example, the preamble to the proposed rule, 52 Fed. Reg. 12301 (April 15, 1987), noted that a 1972 version of this standard contained language that specified "careful probing or hand digging" as the means to uncover utilities. The preamble then noted that an amendment to the 1972 standard later deleted that language "to allow other, *equally effective means* of locating such installations." The preamble continued that in the 1987 proposed rule, OSHA again proposed using language in section (b)(3) that would provide another example of an acceptable method of uncovering utilities that could be used *where the utilities have not been marked and detection equipment is not being used* – "probing with hand-held tools." This method was rejected in the final version of 29 CFR 1926. As OSHA explained in the preamble to the final rule, 54 Fed. Reg. 45916 (October 31, 1989):

> OSHA received two comments * * * and input from ACCSH [OSHA's Advisory Committee on Construction Safety and Health] * * * on this provision. All commenters recommended dropping 'such as probing with hand-held tools' from the proposed provision, because this could create a hazard to employees by damaging the installation or its insulation.

In other words, the commenters objected to the use of hand tools being used unless detection equipment was used in conjunction with them. OSHA then concluded its discussion relative to this provision by agreeing with the commentators and ultimately not including any examples of "acceptable means" in the final provision.

Non-conductive hand tools are permitted

This raises the question of whether the standard permits the use of hand tools alone -- without also using detection equipment. NUCA and other industry stakeholders have recently informed us that non-conductive hand tools that are appropriate to be used to locate underground utilities are now commonly available.

Such tools, such as a "shooter" (which has a non-conductive handle and a snub nose) and non-conductive or insulated probes were not discussed in the rulemaking. Since they were not considered at that time, they were not part of the class of equipment that was thought to be unsafe for this purpose. Therefore, we conclude that the use of these types of hand tools, when used with appropriate caution, is an "acceptable means" for locating underground utilities.

ATTACHMENT 4 (Continued)

Hydro-vacuum excavation

It is our understanding that some hydro-vacuum excavation equipment can be adjusted to use a minimum amount of water and suction pressure. When appropriately adjusted so that the equipment will not damage underground utilities (especially utilities that are particularly vulnerable to damage, such as electrical lines), use of such equipment would be considered a "acceptable means" of locating underground utilities. However, if the equipment cannot be sufficiently adjusted, then this method would not be acceptable under the standard.

Other technologies

We are not suggesting that these are the only devices that would be "acceptable means" under the standard. Industry stakeholders have informed us that there are other types of special excavation equipment designed for safely locating utilities as well.

We apologize for any confusion our July 7 letter may have caused. If you have further concerns or questions, please feel free to contact us again by fax at: U.S. Department of Labor, OSHA, Directorate of Construction, Office of Construction Standards and Compliance Assistance, fax # 202-693-1689. You can also contact us by mail at the above office, Room N3468, 200 Constitution Avenue, N.W., Washington, D.C. 20210, although there will be a delay in our receiving correspondence by mail.

Sincerely,

Russell B. Swanson, Director
Directorate of Construction

NOTE: OSHA requirements are set by statute, standards and regulations. Our interpretation letters explain these requirements and how they apply to particular circumstances, but they cannot create additional employer obligations. This letter constitutes OSHA=s interpretation of the requirements discussed. Note that our enforcement guidance may be affected by changes to OSHA rules. Also, from time to time we update our guidance in response to new information. To keep apprised of such developments, you can consult OSHA's website at http://www.osha.gov.

TABLE OF CONTENTS

SECTION **PAGE**

1.0 PURPOSE **2**

2.0 SCOPE **2**

3.0 GLOSSARY **2**

4.0 RESPONSIBILITIES AND PERSONNEL QUALIFICATIONS **3**

5.0 HEALTH AND SAFETY **4**

6.0 PROCEDURES **5**

6.1 Overview 6
6.2 Soil Sample Collection 6
6.2.1 Procedure for Preserving and Collecting Soil Samples for Volatile Organic Compound Analysis 6
6.2.2 Procedure for Collecting Soil Samples for Non-Volatile Analyses 9
6.2.3 Procedure for Collecting Undisturbed Soil Samples 10
6.3 Surface Soil Sampling 13
6.4 Near-Surface Soil Sampling 14
6.5 Subsurface Soil Sampling With a Hand Auger 15
6.6 Subsurface Soil Sampling with a Split-Barrel Sampler 17
6.7 Subsurface Soil Sampling Using Direct-Push Technology 18
6.8 Excavation and Sampling of Test Pits and Trenches 18
6.8.1 Applicability 18
6.8.2 Test Pit and Trench Excavation 19
6.8.3 Sampling in Test Pits and Trenches 21
6.8.4 Backfilling of Trenches and Test Pits 25
6.9 Records 25

7.0 REFERENCES **26**

ATTACHMENTS

A SOIL & SEDIMENT SAMPLE LOG SHEET **28**
B SPLIT-SPOON SAMPLER **29**
C TEST PIT LOG **30**
D REMOTE SAMPLE HOLDER FOR TEST PIT/TRENCH SAMPLING **31**

1.0 PURPOSE

This Standard Operating Procedure (SOP) describes the procedures to be used to collect surface, near-surface, and subsurface soil samples. Additionally, it describes the methods for sampling of test pits and trenches to determine subsurface soil and rock conditions and for recovery of small-volume or bulk samples from pits.

2.0 SCOPE

This document applies to the collection of surface, near-surface, and subsurface soil samples exposed through hand digging, hand augering, drilling, or machine excavating at hazardous substance sites for laboratory testing, onsite visual examination, and onsite testing.

3.0 GLOSSARY

Composite Sample - A composite sample is a combination of more than one grab sample from various locations and/or depths and times that is homogenized and treated as one sample. This type of sample is usually collected when determination of an average waste concentration for a specific area is required. Composite samples shall not be collected for volatile organics analysis.

Confined Space - As stipulated in 29 Code of Federal Regulations (CFR) 1910.146, a confined space means a space that: (1) is large enough and so configured that an employee can bodily enter and perform assigned work; (2) has limited or restricted means for entry or exit (e.g., tanks, vessels, silos, storage bins, hoppers, vaults, pits, and excavations); and (3) is not designed for continuous employee occupancy. TtNUS considers all confined space as permit-required confined spaces.

Grab Sample - One sample collected at one location and at one specific time.

Hand Auger - A sampling device used to extract soil from the ground.

Representativeness – A qualitative description of the degree to which an individual sample accurately reflects population characteristics or parameter variations at a sampling point. It is therefore an important characteristic not only of assessment and quantification of environmental threats posed by the site, but also for providing information for engineering design and construction. Proper sample location selection and proper sample collection methods are important to ensure that a truly representative sample has been collected.

Sample for Non-Volatile Analyses - Includes all chemical parameters other than volatile organics (e.g., semivolatiles, pesticides/PCBs, metals, etc.) and those engineering parameters that do not require undisturbed soil for their analysis.

Split-Barrel Sampler - A steel tube, split in half lengthwise, with the halves held together by threaded collars at either end of the tube. Also called a split-spoon sampler, this device can be driven into resistant materials using a drive weight mounted in the drilling string. A standard split-barrel sampler is typically available in two common lengths, providing either 20-inch or 26-inch longitudinal clearance for obtaining 18-inch or 24-inch-long samples, respectively. These split-barrel samplers commonly range in size from 2 to 3.5 inches OD. The larger sizes are commonly used when a larger volume of sample material is required (see Attachment B).

Test Pit and Trench - Open, shallow excavations, typically rectangular (if a test pit) or longitudinal (if a trench), excavated to determine shallow subsurface conditions for engineering, geological, and soil chemistry exploration and/or sampling purposes. These pits are excavated manually or by machine (e.g., backhoe, clamshell, trencher, excavator, or bulldozer).

Thin-Walled Tube Sampler - A thin-walled metal tube (also called a Shelby tube) used to recover relatively undisturbed soil samples. These tubes are available in various sizes, ranging from 2 to 5 inches outside diameter (OD) and from 18 to 54 inches in length.

4.0 RESPONSIBILITIES AND PERSONNEL QUALIFICATIONS

Project Manager - The Project Manager is responsible for determining the sampling objectives, selecting proposed sampling locations, and selecting field procedures used in the collection of soil samples. Additionally, in consultation with other project personnel (geologist, hydrogeologist, etc.), the Project Manager establishes the need for test pits or trenches and determines their approximate locations and dimensions.

Site Safety Officer (SSO) - The SSO (or a qualified designee) is responsible for providing the technical support necessary to implement the project Health and Safety Plan. This will include (but not be limited to) performing air quality monitoring during sampling, boring, and excavation activities and to ensure that workers and offsite (downwind) individuals are not exposed to hazardous levels of airborne contaminants. The SSO/designee may also be required to advise the FOL on other safety-related matters regarding boring, excavation, and sampling, such as mitigative measures to address potential hazards from unstable trench walls, puncturing of drums or other hazardous objects, etc.

Field Operations Leader (FOL) - This individual is primarily responsible for the execution of the planning document containing the Sampling and Analysis Plan (SAP). This is accomplished through management of a field sampling team for the proper acquisition of samples. He or she is responsible for the supervision of onsite analyses; ensuring proper instrument calibration, care, and maintenance; sample collection and handling; the completion and accuracy of all field documentation; and making sure that custody of all samples obtained is maintained according to proper procedures. When appropriate and as directed by the FOL, such responsibilities may be performed by other qualified personnel (e.g., field technicians) where credentials and time permit. The FOL is responsible for finalizing the locations for collection of surface, near-surface, and subsurface (hand and machine borings, test pits/trenches) soil samples. He/she is ultimately responsible for the sampling and backfilling of boreholes, test pits, and trenches and for adherence to Occupational Safety and Health Administration (OSHA) regulations during these operations through self acquisition or through the management of a field team of samplers.

Project Geologist/Sampler - The project geologist/sampler is responsible for the proper acquisition of samples in accordance with this SOP and/or other project-specific documents. In addition, this individual is responsible for the completion of all required paperwork (e.g., sample log sheets, field notebook, boring logs, test pit logs, container labels, custody seals, and chain-of-custody forms) associated with the collection of those samples.

Competent Person - A Competent Person, as defined in 29 CFR 1929.650 of Subpart P - Excavations, means one who is capable of identifying existing and predictable hazards in the surroundings, or working conditions that are unsanitary, hazardous, or dangerous to employees, and who has authorization to take prompt corrective measures to eliminate them.

General personnel qualifications for groundwater sample collection and onsite water quality testing include the following:

- Occupational Safety and Health Administration (OSHA) 40-hour and applicable refresher training.
- Capability of performing field work under the expected physical and environmental (i.e., weather) conditions.

- Familiarity with appropriate procedures for sample documentation, handling, packaging, and shipping.

5.0 HEALTH AND SAFETY

Health and safety precautions are identified for individual sample collection procedures throughout this SOP. In addition to those precautions, the following general hazards may be incurred during sampling activities:

- Knee injuries from kneeling on hard or uneven surfaces
- Slips, trips, and falls
- Cuts and lacerations
- Traffic hazards associated with sampling in parking areas, along roadways and highways.

Methods of avoiding these hazards are provided below.

Knee injuries – If kneeling is required during soil sampling, this could result in knee injuries from stones/foreign objects and general damage due to stress on the joints. To minimize this hazard:

- Clear any foreign objects from the work area.
- Wear hard-sided knee pads.
- Stretch ligaments, tendons and muscles before, during and after. Take breaks as frequently as necessary.
- Report pre-existing conditions to the SSO if you feel this activity will aggravate an existing condition.

Slips, Trips, and Falls – These hazards exist while traversing varying terrains carrying equipment to sample locations. To minimize these hazards:

- Pre-survey sampling locations. Eliminate, barricade, or otherwise mark physical hazards leading to the locations.
- Carry small loads that do not restrict the field of vision.
- Travel the safest and clearest route (not necessarily the shortest).

Cuts and Lacerations - To prevent cuts and lacerations associated with soil sampling, the following provisions are required:

- Always cut away from yourself and others when cutting tubing or rope. This will prevent injury to yourself and others if the knife slips.
- Do not place items to be cut in your hand or on your knee.
- Change blades as necessary to maintain a sharp cutting edge. Many accidents result from struggling with dull cutting attachments.

- Whenever practical, wear cut-resistant gloves (e.g., leather or heavy cotton work gloves) at least on the hand not using the knife.
- Keep cutting surfaces clean and smooth.
- Secure items to be cut – do not hold them against the opposing hand, a leg, or other body part.
- When transporting glassware, keep it in a hard-sided container such as a cooler so that if there is a fall, you will be less likely to get cut by broken glass.
- DO NOT throw broken sample jars or glass ampoules into garbage bags. Place broken glass and glass ampoules in hard-sided containers such as a cardboard box or directly into a dumpster. DO NOT reach into garbage bags to retrieve any item accidentally thrown away. Empty the contents onto a flat surface to avoid punctures and lacerations from reaching where you cannot see.

Vehicular and Foot Traffic Hazards – When sampling along the roadway or near traffic patterns, follow the following precautions:

- Motorists may be distracted by onsite activities – ASSUME THEY DO NOT SEE YOU OR MEMBERS OF YOUR FIELD CREW.
- DO NOT place obstructions (such as vehicles) along the sides of the road that may cause site personnel to move into the flow of traffic to avoid your activities or equipment or that will create a blind spot.
- **Provide a required free space of travel**. Maintain at least 6 feet of space between you and moving traffic. Where this is not possible, use flaggers and/or signs to warn oncoming traffic of activities near or within the travel lanes.
- Face Traffic. Whenever feasible, if you must move within the 6 feet of the required free space or into traffic, attempt to face moving traffic at all times. Always leave yourself an escape route.
- Wear high-visibility vests to increase visual recognition by motorists.
- Do not rely on the vehicle operator's visibility, judgment, or ability. Make eye contact with the driver. Carefully and deliberately use hand signals so they will not startle or confuse motorists or be mistaken for a flagger's direction before moving into traffic.
- Your movements may startle a motorist and cause an accident, so move deliberately. Do not make sudden movements that might confuse a motorist.

6.0 PROCEDURES

The following procedures address surface and subsurface sampling.

CAUTION

Each situation must be evaluated individually to determine the applicability and necessity for obtaining a utility clearance ticket/dig permit. Common sense dictates, prior to digging or boring with power equipment, no matter what the depth, or digging by hand in a manner that could damage unprotected underground utilities, that a dig permit is required. See SOP HS-1.0, Utility Locating and Excavation Clearance, for additional clarification. If you do not know or are unsure as to whether a ticket is necessary – **Get the Ticket**.

6.1 Overview

Soil sampling is an important adjunct to groundwater monitoring. Sampling of the soil horizons above the groundwater table can detect contaminants before they migrate to the water table, and can establish the amount of contamination absorbed or adsorbed on aquifer solids that have the potential of contributing to groundwater contamination.

Soil types can vary considerably on a hazardous waste site. These variations, along with vegetation, can affect the rate of contaminant migration through the soil. It is important, therefore, that a detailed record be maintained during sampling operations, particularly noting sampling locations, depths, and such characteristics as grain size, color, and odor. Subsurface conditions are often stable on a daily basis and may demonstrate only slight seasonal variation especially with respect to temperature, available oxygen and light penetration. Changes in any of these conditions can radically alter the rate of chemical reactions or the associated microbiological community, thus further altering specific site conditions. Certain vegetation species can create degradation products that can alter contaminant concentrations in soil. This is why vegetation types and extent of degradation of this foliage must be recorded. To prevent degradation, samples must be kept at their at-depth temperature or lower, protected from direct light, sealed tightly in approved glass containers, and be analyzed as soon as possible after collection. In addition, to the extent possible, vegetation should be removed from the sample.

The physical properties of the soil, its grain size, cohesiveness, associated moisture, and such factors as depth to bedrock and water table, will limit the depth from which samples can be collected and the method required to collect them. It is the intent of this document to present the most commonly employed soil sampling methods used at hazardous waste sites.

6.2 Soil Sample Collection

6.2.1 Procedure for Preserving and Collecting Soil Samples for Volatile Organic Compound Analysis

Samples collected using traditional methods such as collection in a jar with no preservation have been known to yield non-representative samples due to loss of volatile organic compounds (VOCs). To prevent such losses, preservation of samples with methanol or sodium bisulfate may be used to minimize volatilization and biodegradation. This preservation may be performed either in the field or laboratory, depending on the sampling methodology employed. Because of the large number of sampling methods and associated equipment required, careful coordination between field and laboratory personnel is needed.

Soil samples to be preserved by the laboratory are currently being collected using Method SW-846, 5035. For samples preserved in the field, laboratories are currently performing low-level analyses (sodium bisulfate preservation) and high- to medium-level analyses (methanol preservation) depending on the needs of the end user.

The following procedures outline the necessary steps for collecting soil samples to be preserved at the laboratory, and for collecting soil samples to be preserved in the field with methanol or sodium bisulfate.

6.2.1.1 Soil Samples to be Preserved at the Laboratory

Soil samples collected for volatile organic analysis that are to be preserved at the laboratory shall be obtained using a hermetically sealed sample vial such as an EnCore™ sampler. Each sample shall be

obtained using a reusable sampling handle (T-handle) that can be provided with the EnCore™ sampler when requested and purchased. Collect the sample in the following manner for each EnCore™ sampler:

1. Scene Safety - Evaluate the area where sampling will occur. Ensure that the area is safe from physical, chemical, and natural hazards. Clear or barricade those hazards that have been identified.

2. Wear the appropriate personal protective equipment (PPE). This will include, at a minimum, safety glasses and nitrile surgeon's gloves. If you must kneel on the ground or place equipment on the surface being sampled, cover the ground surface with plastic to minimize surface contamination of your equipment and clothing. Wear knee pads to protect your knees from kneeling on hard or uneven surfaces.

3. Load the Encore™ sampler into the T-handle with the plunger fully depressed.

4. Expose the area to be sampled using a hand trowel or similar device to remove surface debris.

5. Press the T-handle against the freshly exposed soil surface, forcing soil into the sampler. The plunger will be forced upward as the cavity fills with soil.

6. When the sampler is full, rotate the plunger and lock it into place. If the plunger does not lock, the sampler is not full. This method ensures there is no headspace. Soft soil may require several plunges or forcing soil against a hard surface such as a sample trowel to ensure that headspace is eliminated.

7. Use a paper towel to remove soil from the side of the sampler so a tight seal can be made between the sample cap and the rubber O-ring.

8. With soil slightly piled above the rim of the sampler, force the cap on until the catches hook the side of the sampler.

9. Remove any surface soil from the outside of the sampler and place in the foil bag provided with the sampler. Good work hygiene practices and diligent decontamination procedures prevents the spread of contamination even on the outside of the containers.

10. Label the bag with appropriate information in accordance with SOP SA-6.3.

11. Place the full sampler inside a lined cooler with ice and cool to 4˚C ± 2 ˚C. Make sure any required trip blanks and temperature blanks are also in the cooler. Secure custody of the cooler in accordance with SOP SA-6.3.

12. Typically, collect three Encore™ samplers at each location. Consult the SAP or laboratory to determine the required number of Encore™ samplers to be collected.

13. The T-handle shall be decontaminated before moving to the next interval or location using a soap and water wash and rinse, and where applicable, the selected solvent as defined in the project planning documents.

Using this type of sampling device eliminates the need for field preservation and the shipping restrictions associated with preservatives. A complete set of instructions is included with each Encore™ sampler.

After the Encore™samples are collected, they should be placed on ice immediately and delivered to the laboratory within 48 hours (following the chain-of-custody and documentation procedures outlined in SOP SA-6.1). Samples must be preserved by the laboratory within 48 hours of sample collection.

6.2.1.2 Soil Samples to be Preserved in the Field

Soil samples preserved in the field may be prepared for analyses using both the low-level (sodium bisulfate preservation) and high- to medium-level (methanol preservation) methods.

Safety Reminder

When using chemicals in the field to preserve samples, the FOL and/or SSO must ensure that Materials Safety Data Sheets (MSDSs) have been provided with the chemicals to be used. They also must ensure that these chemicals have been added to the Chemical Inventory List contained within Section 5.0, Hazard Communication, of your Health and Safety Guidance Manual (HSGM). Lastly, but most importantly, the FOL and/or SSO must review the hazards with personnel using these chemicals and ensure that provisions are available for recommended PPE and emergency measures (e.g., eyewash, etc.).

Methanol Preservation (High to Medium Level):

Bottles may be pre-spiked with methanol in the laboratory or prepared in the field. Soil samples to be preserved in the field with methanol shall utilize 40 to 60 mL glass vials with septum-lined lids. Each sample bottle shall be filled with 25 mL of demonstrated analyte-free purge-and-trap grade methanol. The preferred method for adding methanol to the sample bottle is by removing the lid and using a pipette or scaled syringe to add the methanol directly to the bottle.

CAUTION

NEVER attempt to pipette by mouth

In situations where personnel are required to spike the septum using a hypodermic needle, the following provisions for handling sharps must be in place:

- Training of personnel regarding methods for handling of sharps
- Hard-sided containers for the disposal of sharps
- Provisions for treatment in cases where persons have received a puncture wound

Soil shall be collected with the use of a decontaminated (or disposable), small-diameter coring device such as a disposable tube/plunger-type syringe with the tip cut off. The outside diameter of the coring device must be smaller than the inside diameter of the sample bottle neck.

A small electronic balance or manual scale will be necessary for measuring the volume of soil to be added to the methanol-preserved sample bottle. Calibration of the scale shall be performed prior to use and intermittently throughout the day according to the manufacturer's requirements.

The sample should be collected as follows:

1. Weigh the unused syringe and plunger to the nearest 0.01 gram.

2. Pull the plunger back and insert the syringe into the soil to be sampled.

3. Collect 8 to 12 grams of soil by pushing the syringe barrel into the soil.

4. Weigh the sample and adjust until obtaining the required amount of sample.

5. Record the sample weight to the nearest 0.01 gram in the field logbook and/or on the sample log sheet.

6. Extrude the weighed soil sample into the methanol-preserved sample bottle taking care not to contact the sample container with the syringe.

7. If dirty, wipe soil particles from the threads of the bottle and cap. Cap the bottle tightly.

8. After capping the bottle, swirl the sample (do not shake) in the methanol and break up the soil such that all of the soil is covered with methanol.

9. Place the sample on ice immediately and prepare for shipment to the laboratory as described in SOP SA-6.1.

Sodium Bisulfate Preservation (Low Level):

> ***CAUTION***
> Care should be taken when adding the soil to the sodium bisulfate solution. A chemical reaction of soil containing carbonates (limestone) may cause the sample to effervesce or the vial to possibly explode. To avoid this hazard or hazards of this type, a small sample aliquot should be subjected to the sample preservative. If it effervesces in an open air environment, utilize an alternative method such as Encore™ or 2-ounce jar.

Bottles may be prepared in the laboratory or in the field with sodium bisulfate solution. Samples to be preserved in the field using the sodium bisulfate method are to be prepared and collected as follows:

1. Add 1 gram of sodium bisulfate to 5 mL of laboratory-grade deionized water in a 40 to 60 mL glass vial with septum-lined lid.

2. Collect the soil sample and record the sample weight to the nearest 0.01 gram in the field logbook or on the sample log sheet as described for methanol preservation

3. Add the weighed sample to the sample vial.

4. Collect duplicate samples using the methanol preservation method on a one-for-one sample basis because it is necessary for the laboratory to perform both low-level and medium-level analyses.

5. Place the samples on ice immediately and prepare for shipment to the laboratory as described in SOP SA-6.1.

> ***NOTE***
> If lower detection limits are necessary, an option to field preserving with sodium bisulfate may be to collect EnCore™ samplers at a given sample location. Consult the planning documents to determine whether this is required. If it is, collect samples in accordance with the Encore™ sampling procedure above and then send all samplers to the laboratory to perform the required preservation and analyses.

6.2.2 Procedure for Collecting Soil Samples for Non-Volatile Analyses

Samples collected for non-volatile analyses may be collected as either grab or composite samples as follows:

1. With a stainless steel trowel or other approved tool, transfer a portion of soil to be sampled to a stainless steel bowl or disposable inert plastic tray.

2. Remove roots, vegetation, sticks, and stones larger than the size of a green pea.

3. Thoroughly mix the soil in the bowl or tray to obtain as uniform a texture and color as practicable. The soil type, moisture content, amount of vegetation, and other factors may affect the amount of time required to obtain a properly mixed sample. In some cases, it may be impossible to obtain a uniform sample appearance. Use the field logbook to describe any significant difficulties encountered in obtaining a uniform mixture.

4. Transfer the mixed soil to the appropriate sample containers and close the containers.

5. Label the sample containers in accordance with SOP SA-6.3.

6. Place the containers in a cooler of ice as soon after collection as possible.

7. Prepare the sample shipment and ship the samples in accordance with SOP SA-6.1.

> ***NOTE***
> Cooling may not be required for some samples depending on the scheduled analyses. Consult the planning documents if in doubt regarding correct sample preservation conditions. When in doubt – Cool to 4˚C.

> ***NOTE***
> Head space is permitted in soil sample containers for non-volatile analyses to allow for sample expansion.

6.2.3 Procedure for Collecting Undisturbed Soil Samples

> ***NOTE***
> Use of thin-walled undisturbed tube samplers is restricted by the consistency of the soil to be sampled. Often, very loose and/or wet samples cannot be retrieved by the samplers, and soil with a consistency in excess of very stiff cannot be penetrated by the sampler. Devices such as Dennison or Pitcher core samplers can be used to obtain undisturbed samples of stiff soil. Using these devices normally increases sampling costs, and therefore their use should be weighed against the need for acquiring an undisturbed sample. These devices are not discussed in this SOP because they are not commonly used.

When it is necessary to acquire undisturbed samples of soil for purposes of engineering parameter analysis (e.g., permeability), a thin-walled, seamless tube sampler (Shelby tube) shall be employed using the following collection procedure:

1. In preparation for sampling utilizing a drill rig, field personnel must complete the following activities:

   - Ensure that all subsurface drilling activities are preceded by a utility clearance for the area to be investigated. This includes activities described in SOP HS-1.0, Utility Location and Excavation Clearance, as well as any location-specific procedures that may apply.

REMEMBER
If you are digging near a marked utility (within the diameter of an underground utility that has been marked plus 18 inches), you must first locate the utility through vacuum extraction or hand digging to ensure that your activities will not damage the utility.

- Complete an Equipment Inspection Checklist for the drill rig or direct-push technology (DPT) rig. This checklist will be provided in the HASP.
- Review the Safe Work Permit prior to conducting the activity.
- Review the activity to be conducted.

2. Remove all surface debris (e.g., vegetation, roots, twigs, etc.) from the specific sampling location and drill and/or clean out the borehole to the desired sampling depth. Be careful to minimize potential disturbance of the material to be sampled. In saturated material, withdraw the drill bit slowly to prevent loosening of the soil around the borehole and to maintain the water level in the hole at or above groundwater level.

CAUTION
The use of bottom-discharge bits or jetting through an open-tube sampler to clean out the borehole shall not be allowed. Only the use of side-discharge bits is permitted.

3. Determine whether a stationary piston-type sampler is required to limit sample disturbance and aid in retaining the sample. Either the hydraulically operated or control rod activated-type of stationary piston sampler may be used.

4. Prior to inserting the tube sampler into the borehole, check to ensure that the sampler head contains a check valve. The check valve is necessary to keep water in the rods from pushing the sample out the tube sampler during sample withdrawal. In addition, the check valve maintains a positive suction within the tube to help retain the sample.

5. A stainless steel tube sampler is typically used to minimize chemical reaction between the sample and the sampling tube.

6. With the sampling tube resting on the bottom of the hole and the water level in the boring at groundwater level or above, push the tube into the soil with a continuous and rapid motion, without impacting or twisting. If the soil is too hard to penetrate by pushing alone, careful hammering may be used by minimizing drop distance (tapping) of the hammer. Before pulling the tube, turn it at least one revolution to shear the sample off at the bottom. In no case shall the tube be pushed farther than the length provided for the soil sample. Allow about 3 inches in the tube for cuttings and sludge.

7. Upon removal of the sampling tube from the hole, measure the length of sample in the tube and also the length penetrated.

8. Remove disturbed material in the upper end of the tube and measure the length of sample again.

9. After removing at least 1 inch of soil from the lower end, place enough packing material (clean inert material such as paper or cloth) tightly in each end of the Shelby tube and then pour melted wax into each end to make at least a ½-inch wax plug and then add more packing material to fill the voids at both ends.

10. Place plastic caps on the ends, tape the caps in place, and dip the ends in wax to prevent loss of soil.

11. Affix label(s) to the tube as required and record sample number, depth, penetration, and recovery length on the label.

12. Mark the "up" direction on the side and upper end of the tube with indelible ink.

13. Complete a chain-of-custody form (see SOP SA-6.3) and other required forms (including Attachment A of this SOP).

14. Ship samples protected with suitable resilient packing material to reduce shock, vibration, and disturbance.

CAUTION

To preserve sample integrity do not allow tubes to freeze, and store the samples vertically with the same orientation they had in the ground, (i.e., top of sample is up) in a cool place out of the sun at all times.

CAUTION

A primary concern in the preparation of the wax plugs is the potential for the heat source and melted wax to cause a fire and/or burns. Follow the directions below to prevent injury or fire.

Electrical Heating

Using hot plates to melt the wax is acceptable. In an outdoor setting, make sure a Ground Fault Circuit Interrupter (GFCI) is employed within the electrical circuit. If a portable generator is used, ensure that the generator is an adequate distance from the sampling operation (at least 50 feet). Ensure that the extension cord is rated for the intended load and for outdoor use and is free from recognizable damage. Ensure flammable preservatives are not employed or stored near the hot plate. Although a Hot Work Permit is not required, scene safety evaluation by site personnel of the above elements is. As always, if a fire potential exists, the provisions for extinguishing must be immediately accessible as well as any provisions for first aid measures.

Open Flame

If an open flame is used, the following provisions are necessary:

- Complete a Hot Work Permit and any local permit required for elevated temperature applications. The Hot Work Permit, provided in your HASP, will aid the FOL and/or the SSO in ensuring that fire protection provisions (extinguishers, fire watches, etc.) are in place as well as ensuring that local requirements have been addressed.

- Ensure that water is available to address any wax splashes or contact. If possible, immerse the contacted area. Where this is not possible, run water over the area and apply cold compresses. The need for medical attention or first aid shall be determined on site under the direction of the SSO.

6.3 Surface Soil Sampling

The simplest, most direct method of collecting surface soil samples for subsequent analysis is by use of a stainless steel shovel, hand auger, soil corer, or stainless steel or disposable plastic trowel.

> ***NOTE***
> Multiple depth intervals are used to describe surface soil. Sometimes surface soil is defined as soil from 0 to 2 inches below ground surface (bgs), and sometimes it is defined as soil from other depths such as 0 to 2 feet bgs. Ensure that the definition of surface soil depth is clear before collecting surface soil samples.
>
> For the purposes of instruction, the terms "surface soil" and "near-surface soil" are used in this SOP as follows:
>
> - Surface soil - 0 to 6 inches bgs
> - Near-surface soil - 6 to 18 inches bgs
>
> If these intervals are defined differently in the planning documents, substitute the appropriate depth ranges.

In general, the following equipment is necessary for obtaining surface soil samples:

- Stainless steel or pre-cleaned disposable trowel.
- Stainless steel hand auger, soil corer, or shovel.
- Real-time air monitoring instrument (e.g., PID, FID) as directed in project planning document.
- Required PPE.
  - Nitrile surgeon's or latex gloves may be used, layered as necessary.
  - Safety glasses
  - Other – Items identified on the Safe Work Permit may be required based on location-specific requirements such as hearing protection, steel-toed work boots, and a hard hat when working near a drill rig. These provisions will be listed in the HASP or directed by the FOL and/or SSO.

> ***Safety Reminder***
> The use of latex products may elicit an allergic reaction in some people. Should this occur, remove the latex gloves, treat for an allergic reaction, and seek medical attention as necessary.

- Required paperwork (see SOP SA-6.3 and Attachment A of this SOP)
- Required decontamination equipment
- Required sample container(s)
- Wooden stakes or pin flags

- Sealable polyethylene bags (e.g., Ziploc® baggies)
- Heavy duty cooler
- Ice
- Chain-of-custody records and custody seals

When acquiring surface soil samples, use the following procedure:

1. Place padding or use knee pads when kneeling near the sample location. If necessary, place plastic sheeting to provide a clean surface for sample equipment to avoid possible cross- contamination.
2. Carefully remove vegetation, roots, twigs, litter, etc. to expose an adequate soil surface area to accommodate sample volume requirements.
3. Using a precleaned syringe or EnCore™ samplers, follow the procedure in Section 6.2.1 for collecting surface soil samples for volatile analysis. Surface soil samples for volatile organic analysis should be collected deeper than 6 inches bgs because shallower material has usually lost most of the volatiles through evaporation. Ensure that the appropriate surface soil depth is being analyzed in accordance with the planning document.
4. Using decontaminated sampling tools, thoroughly mix in place a sufficient amount of soil to fill the remaining sample containers. See Section 6.5 of this procedure for hand auger instruction, as needed.
5. Transfer the sample into those containers utilizing a stainless steel trowel.
6. Cap and securely tighten all sample containers.
7. Affix a sample label to each container. Be sure to fill out each label carefully and clearly, addressing all the categories described in SOP SA-6.3.
8. Proceed with the handling and processing of each sample container as described in SOP SA-6.2.
9. Site restoration – Whenever removing sample materials, always restore the surface. It is our intent to leave the area better than we found it. Do NOT create trip hazards in areas when pedestrian traffic may exist.

6.4 Near-Surface Soil Sampling

Collection of samples from near the surface (depth of 6 to 18 inches) can be accomplished with tools such as shovels, hand auger, soil corers, and stainless steel or pre-cleaned disposable trowels and the equipment listed under Section 6.5 of this procedure.

To obtain near-surface soil samples, the following protocol shall be used:

1. With a clean shovel, make a series of vertical cuts in the soil to the depth required to form a square approximately 1 foot by 1 foot.
2. Lever out the formed plug and scrape the bottom of the freshly dug hole with a decontaminated stainless steel or pre-cleaned disposable trowel to remove any loose soil.

3. Follow steps 1 through 9 of Section 6.3.

6.5 Subsurface Soil Sampling With a Hand Auger

A hand augering system generally consists of a variety of stainless steel bucket bits (approximately 6.5 inches long and 2, 2.75, 3.25, and 4 inches in diameter), series of extension rods (available in 2-, 3-, 4- and 5-inch lengths), and a T-handle connected to extension rods and to the auger bucket. A larger-diameter bucket bit is commonly used to bore a hole to the desired sampling depth and then it is withdrawn. The larger-diameter bit is then replaced with a smaller-diameter bit, lowered down the hole, and slowly turned into the soil to the completion depth (approximately 6 inches). The apparatus is then withdrawn and the soil sample collected.

The hand auger can be used in a wide variety of soil conditions. It can be used to sample soil either from the surface, or to depths in excess of 12 feet. However, the presence of subsurface rocks and landfill material and collapse of the borehole normally limit sampling depth.

To accomplish soil sampling using a hand augering system, the following equipment is required:

- Complete hand auger assembly (variety of bucket bit sizes)
- Stainless steel mixing bowls
- The equipment listed in Section 6.3
- Miscellaneous hand tools as required to assemble and disassemble the hand auger units

CAUTION

Potential hazards associated with hand augering include:

- Muscle strain and sprain due to over twisting and/or over compromising yourself.
- Equipment failure due to excessive stress on the T-handle or rods through twisting. Failure of any of these components will result in a sudden release and potential injury due to that failure.

As in all situations, any intrusive activities that could damage underground utilities shall be proceeded by a Dig/Excavation permit/ticket. Call the Utility Locating service in the area or your Project Health and Safety Officer for more information. When in doubt – **Get the Ticket!**

To obtain soil samples using a hand auger, use the following procedure:

1. Wearing designated PPE, attach a properly decontaminated bucket bit to a clean extension rod and attach the T-handle to the extension rod.
2. Clear the area to be sampled of any surface debris (vegetation, twigs, rocks, litter, etc.).
3. Twist the bucket into the ground while pushing vertically downward on the auger. The cutting shoes fill the bucket as it is advanced into the ground.
4. As the auger bucket fills with soil, periodically remove any unneeded soil.

5. Add rod extensions as necessary to extend the reach of the auger. Also, note (in a field notebook, boring log, and/or on a standardized data sheet) any changes in the color, texture or odor of the soil as a function of depth. The project-specific planning document (SAP, HASP, etc.) describe requirements for scanning the soil with a real-time air monitoring instrument (e.g., PID, FID, etc.) and recording the measurements.

6. After reaching the desired depth (e.g., the top of the interval to be sampled), slowly and carefully withdraw the apparatus from the borehole to prevent or minimize movement of soil from shallower intervals to the bottom of the hole.

7. Remove the soiled bucket bit from the rod extension and replace it with another properly decontaminated bucket bit. The bucket bit used for sampling is to be smaller in diameter than the bucket bit employed to initiate the borehole.

8. Carefully lower the apparatus down the borehole. Care must be taken to avoid scraping the borehole sides.

9. Slowly turn the apparatus until the bucket bit is advanced approximately 6 inches.

10. Discard the top of the core (approximately 1 inch), which represents any loose material collected by the bucket bit before penetrating the sample material.

11. Using a precleaned syringe or EnCore™ samplers, follow the procedure in Section 6.2.1 for collecting a soil sample for volatile compound analysis directly from the bucket bit.
12. Utilizing a properly decontaminated stainless steel trowel or dedicated disposable trowel, remove the remaining sample material from the bucket bit and place into a properly decontaminated stainless steel mixing bowl.

13. Homogenize the sample material as thoroughly as practicable then fill the remaining sample containers. Refer to Section 6.2.2.

14. Follow steps 4 through 7 listed in Section 6.3.

6.5.1 Sampling Using Stainless Steel Soil Corers

A soil corer is a stainless steel tube equipped with a cutting shoe and sample window in the side. The soil corer is advanced into the soil by applying downward pressure (body weight). The soil is unloaded by then forcing a ram towards the cutting shoe, which results in the discharge of the soil core through a window in the sleeve.

Use, application, and sample protocol is the same as for hand augering provided above, but without necessarily rotating the corer while advancing it.

SAFETY REMINDER

Hand augering and soil corer sampling can be physically demanding based on the type of geology and subsurface encumbrances encountered. Soil coring has some added hazards such the corer collapsing under your weight. To reduce the potential for muscle strain and damage, the following measures will be incorporated:

- Stretch and limber your muscles before heavy exertion. This hazard becomes more predominant in the early morning hours (prior to muscles becoming limber) and later in the day (as a result of fatigue).

- Job rotation – Share the duties so that repetitive actions do not result in fatigue and injury.

- Increase break frequencies as needed, especially as ambient conditions of heat and/or cold stress may dictate.

- Do not force the hand tools or use cheater pipes or similar devices to bypass an obstruction. Move to another location near the sampling point. Exerting additional forces on the sampling devices can result in damage and/or failure that could potentially injure someone in the immediate vicinity.

- Do not over compromise yourself when applying force to the soil corer or hand auger. If there is a sudden release, it could result in a fall or muscle injury due to strain.

6.6 Subsurface Soil Sampling with a Split-Barrel Sampler

A split-barrel (split-spoon) sampler consists of a heavy carbon steel or stainless steel sampling tube that can be split into two equal halves to reveal the soil sample (see Attachment B). A drive head is attached to the upper end of the tube and serves as a point of attachment for the drill rod. A removable tapered nosepiece/drive shoe attaches to the lower end of the tube and facilitates cutting. A basket-like sample retainer can be fitted to the lower end of the split tube to hold loose, dry soil samples in the tube when the sampler is removed from the drill hole. This split-barrel sampler is made to be attached to a drill rod and forced into the ground by means of a 140-pound or larger casing driver.

Safety Reminder

It is intended through the Equipment Inspection for Drill Rigs form provided in the HASP that the hammer and hemp rope, where applicable, associated with this activity will be inspected (no physical damage is obvious), properly attached to the hammer (suitable knots or sufficient mechanical devices), and is in overall good condition.

Split-barrel samplers are used to collect soil samples from a wide variety of soil types and from depths greater than those attainable with other soil sampling equipment.

The following equipment is used for obtaining split-barrel samples:

- Drilling equipment (provided by subcontractor).
- Split-barrel samplers (2-inch OD, 1-3/8-inch ID, either 20 inches or 26 inches long); Larger OD samplers are available if a larger volume of sample is needed.
- Drive weight assembly, 140-pound weight, driving head, and guide permitting free fall of 30 inches.
- Stainless steel mixing bowls.
- Equipment listed in Section 6.3.

The following steps shall be followed to obtain split-barrel samples (Steps 1 through 4 are typically performed by the drilling subcontractor):

1. Attach the split-barrel sampler to the sampling rods.

2. Lower the sampler into the borehole inside the hollow stem auger bits.

3. Advance the split-barrel sampler by hammering the length (typically 18 or 24 inches) of the split-barrel sampler into the soil using 140-pound or larger hammer.

4. When the desired depth is achieved, extract the drill rods and sampler from the augers and/or borehole.

5. Detach the sampler from the drill rods.

6. Place the sampler securely in a vise so it can be opened using pipe wrenches.

> ***CAUTION***
> Pipe wrenches are used to separate the split spoon into several components. The driller's helper should not apply excessive force through the use of cheater pipes or push or pull in the direction where, if the wrench slips, hands or fingers will be trapped against an immovable object.

7. Remove the drive head and nosepiece with the wrenches, and open the sampler to reveal the soil sample.

8. Immediately scan the sample core with a real-time air monitoring instrument (e.g., FID, PID, etc.) (as project-specific planning documents dictate). Carefully separate (or cut) the soil core, with a decontaminated stainless steel knife or trowel, at about 6-inch intervals while scanning the center of the core for elevated readings. Also scan stained soil, soil lenses, and anomalies (if present), and record readings.

9. If elevated vapor readings were observed, collect the sample scheduled for volatile analysis from the center of the core where elevated readings occurred. If no elevated readings where encountered, the sample material should be collected from the core's center (this area represents the least disturbed area with minimal atmospheric contact) (refer to Section 6.2.1).

10. Using the same trowel, remove remaining sample material from the split-barrel sampler (except for the small portion of disturbed soil usually found at the top of the core sample) and place the soil into a decontaminated stainless steel mixing bowl.

11. Homogenize the sample material as thoroughly as practicable then fill the remaining sample containers (refer to Section 6.2.2).

12. Follow steps 4 through 7 in Section 6.3.

6.7 Subsurface Soil Sampling Using Direct-Push Technology

Subsurface soil samples can be collected to depths of 40+ feet using DPT. DPT equipment, responsibilities, and procedures are described in SOP SA-2.5.

6.8 Excavation and Sampling of Test Pits and Trenches

6.8.1 Applicability

This subsection presents routine test pit or trench excavation techniques and specialized techniques that are applicable under certain conditions.

CAUTION

During the excavation of trenches or pits at hazardous waste sites, several health and safety concerns arise from the method of excavation. No personnel shall enter any test pit or excavation over 4 feet deep except as a last resort, and then only under direct supervision of a Competent Person (as defined in 29 CFR 1929.650 of Subpart P - Excavations). Whenever possible, all required chemical and lithological samples should be collected using the excavator bucket or other remote sampling apparatus. If entrance is required, all test pits or excavations must be stabilized by bracing the pit sides using specifically designed wooden, steel, or aluminum support structures or through sloping and benching. Personnel entering the excavation may be exposed to toxic or explosive gases and oxygen-deficient environments; therefore, monitoring will be conducted by the Competent Person to determine if it is safe to enter. Any entry into a trench greater than 4 feet deep will constitute a Confined Space Entry and must be conducted in conformance with OSHA standard 29 CFR 1910.146. In all cases involving entry, substantial air monitoring, before entry, appropriate respiratory gear and protective clothing determination, and rescue provisions are mandatory. There must be at least three people present at the immediate site before entry by one of the field team members. This minimum number of people will increase based on the potential hazards or complexity of the work to be performed. The reader shall refer to OSHA regulations 29 CFR 1926.650, 29 CFR 1910.120, 29 CFR 1910.134, and 29 CFR 1910.146. High-hazard entries such as this will be supported by members of the Health Sciences Group professionally trained in these activities.

Excavations are generally not practical where a depth of more than about 15 to 20-feet is desired, and they are usually limited to a few feet below the water table. In some cases, a pumping system may be required to control water levels within the pit, providing that pumped water can be adequately stored or disposed. If soil data at depths greater than 15-feet are required, the data are usually obtained through test borings instead of test pits.

In addition, hazardous wastes may be brought to the surface by excavation equipment. This material, whether removed from the site or returned to the subsurface, must be properly handled according to any and all applicable federal, state, and local regulations.

6.8.2 Test Pit and Trench Excavation

Test pits or trench excavations are constructed with the intent that they will provide an open view of subsurface lithology and/or disposal conditions that a boring will not provide. These procedures describe the methods for excavating and logging test pits and trenches installed to determine subsurface soil and rock conditions. Test pit operations shall be logged and documented (see Attachment C).

Test pits and trenches may be excavated by hand or power equipment to permit detailed descriptions of the nature and contamination of the in-situ materials. The size of the excavation will depend primarily on the following:

- The purpose and extent of the exploration

- The space required for efficient excavation
- The chemicals of concern
- The economics and efficiency of available equipment

Test pits normally have a cross section that is 4 to 10 feet square; test trenches are usually 3 to 6 feet wide and may be extended for any length required to reveal conditions along a specific line. The following table provides guidelines for design consideration based on equipment efficiencies.

Equipment	Typical Widths, in Feet
Trenching machine	0.25 to 1.0
Backhoe/Track Hoe	2 to 6

The lateral limits of excavation of trenches and the position of test pits shall be carefully marked on area base maps. If precise positioning is required to indicate the location of highly hazardous materials, nearby utilities, or dangerous conditions, the limits of the excavation shall be surveyed. Also, if precise determination of the depth of buried materials is needed for design or environmental assessment purposes, the elevation of the ground surface at the test pit or trench location shall also be determined by survey. If the test pit/trench will not be surveyed immediately, it shall be backfilled and its position identified with stakes placed in the ground at the margin of the excavation for later surveying.

The construction of test pits and trenches shall be planned and designed in advance as much as possible. However, the following field conditions may necessitate revisions to the initial plans:

- Subsurface utilities
- Surface and subsurface encumbrances
- Vehicle and pedestrian traffic patterns
- Purpose for excavation (e.g., the excavation of potential ordnance items)

The final depth and construction method shall be collectively determined by the FOL and designated Competent Person. The actual layout of each test pit, temporary staging area, and spoils pile may further be predicated based on site conditions and wind direction at the time the test pit is excavated. Prior to excavation, the area may be surveyed by magnetometer or metal detector or other passive methods specified in SOP HS1.0, Utility Location and Excavation Clearance, to identify the presence of underground utilities or drums. Where possible, the excavator should be positioned upwind and preferably within an enclosed cab.

No personnel shall enter any test pit or excavation except as a last resort, and then only under direct supervision of a Competent Person. If entrance is required, OSHA requirements must be met (e.g., walls must be braced with wooden or steel braces, ladders must be placed for every 25 feet of lateral travel and extended 3 feet above ground surface). A temporary guard rail or vehicle stop must be placed along the surface of the hole before entry in situations where the excavation may be approached by traffic. Spoils will be stockpiled no closer than 2 feet from the sidewall of the excavation. The excavation equipment operator shall be careful not to undercut sidewalls and will, where necessary, bench back to increase stability. The top cover, when considered clean, will be placed separately from the subsurface materials to permit clean cover. It is emphasized that the project data needs should be structured such that required samples can be collected without requiring entrance into the excavation. For example,

samples of leachate, groundwater, or sidewall soil can be collected with telescoping poles or similar equipment.

Dewatering and watering may be required to ensure the stability of the side walls, to prevent the bottom of the pit from heaving, and to keep the excavation stable. This is an important consideration for excavations in cohesionless material below the groundwater table and for excavations left open greater than a day. Liquids removed as a result of dewatering operations must be handled as potentially contaminated materials. Procedures for the collection and disposal of such materials should be discussed in the site-specific project plans.

Where possible excavations and test pits shall be opened and closed within the same working day. Where this is not possible, the following engineering controls shall be put in place to control access:

- Trench covers/street plates
- Fences encompassing the entire excavation intended to control access
- Warning signs warning personnel of the hazards
- Amber flashing lights to demarcate boundaries of the excavation at night

Excavations left open will have emergency means to exit should someone accidentally enter.

6.8.3 Sampling in Test Pits and Trenches

6.8.3.1 General

Log test pits and trenches as they are excavated in accordance with the Test Pit Log presented in Attachment C. These records include plan and profile sketches of the test pit/trench showing materials encountered, their depth and distribution in the pit/trench, and sample locations. These records also include safety and sample screening information.

Entry of test pits by personnel is extremely dangerous, shall be avoided unless absolutely necessary, and can occur only after all applicable health and safety and OSHA requirements have been met as stated above. These provisions will be reiterated as appropriate in the project-specific HASP.

The final depth and type of samples obtained from each test pit will be determined at the time the test pit is excavated. Sufficient samples are usually obtained and analyzed to quantify contaminant distribution as a function of depth for each test pit. Additional samples of each waste phase and any fluids encountered in each test pit may also be collected.

In some cases, samples of soil may be extracted from the test pit for reasons other than waste sampling and chemical analysis, for instance, to obtain geotechnical information. Such information includes soil types, stratigraphy, strength, etc., and could therefore entail the collection of disturbed (grab or bulk) or relatively undisturbed (hand-carved or pushed/driven) samples that can be tested for geotechnical properties. The purposes of such explorations are very similar to those of shallow exploratory or test borings, but often test pits offer a faster, more cost-effective method of sampling than installing borings.

6.8.3.2 Sampling Equipment

The following equipment is needed for obtaining samples for chemical or geotechnical analysis from test pits and trenches:

- Backhoe or other excavating machinery.
- Shovels, picks, hand augers, and stainless steel trowels/disposable trowels.
- Sample container - bucket with locking lid for large samples; appropriate bottle ware for chemical or geotechnical analysis samples.
- Polyethylene bags for enclosing sample containers; buckets.
- Remote sampler consisting of 10-foot sections of steel conduit (1-inch-diameter), hose clamps, and right angle adapter for conduit (see Attachment D).

6.8.3.3 Sampling Methods

The methods discussed in this section refer to test pit sampling from grade level. If test pit entry is required, see Section 6.8.3.4.

- Excavate the trench or pit in several 0.5- to 1.0-foot depth increments. Where soil types support the use of a sand bar cutting plate, use of this device is recommended to avoid potentially snagging utilities with the excavator teeth. It is recommended that soil probes or similar devices be employed where buried items or utilities may be encountered. This permits the trench floor to be probed prior to the next cut.
- After each increment:
  - the operator shall wait while the sampler inspects the test pit from grade level
  - the sampler shall probe the next interval where this is considered necessary. Practical depth increments for lithological evaluations may range from 2 to 4 feet i or where lithological changes are noted.
- The backhoe operator, who will have the best view of the test pit, shall immediately cease digging if:
  - Any fluid phase, including groundwater seepage, is encountered in the test pit
  - Any drums, other potential waste containers, obstructions, or utility lines are encountered
  - Distinct changes of material being excavated are encountered

This action is necessary to permit proper sampling of the test pit and to prevent a breach of safety protocol. Depending on the conditions encountered, it may be required to excavate more slowly and carefully with the backhoe.

For obtaining test pit samples from grade level, the following procedure shall be followed:

- Use the backhoe to remove loose material from the excavation walls and floor to the greatest extent possible.
- Secure the walls of the pit, if necessary. (There is seldom any need to enter a pit or trench that would justify the expense of shoring the walls. All observations and samples should be taken from the ground surface.)

- Samples of the test pit material are to be obtained either directly from the backhoe bucket or from the material after it has been deposited on the ground, as follows:

  a. The sampler or FOL shall direct the backhoe operator to remove material from the selected depth or location within the test pit/trench.

  b. The backhoe operator shall bring the bucket over to a designated location on the sidewall a sufficient distance from the pit (at least 5 feet) to allow the sampler to work around the bucket.

  c. After the bucket has been set on the ground, the backhoe operator shall either disengage the controls or shut the machine down.

  d. When signaled by the operator that it is safe to do, the sampler will approach the bucket.

  e. The soil shall be monitored with a photoionization or flame ionization detector (PID or FID) as directed in the project -specific planning documents.

  f. The sampler shall collect the sample from the center of the bucket or pile in accordance with surface soil sampling procedures of Section 6.3 or 6.4, as applicable. Collecting samples from the center of a pile or bucket eliminates cross-contamination from the bucket or other depth intervals.

- If a composite sample is desired, several depths or locations within the pit/trench will be selected, and the bucket will be filled from each area. It is preferable to send individual sample bottles filled from each bucket to the laboratory for compositing under the more controlled laboratory conditions. However, if compositing in the field is required, each sample container shall be filled from materials that have been transferred into a mixing bucket and homogenized. Note that homogenization/compositing is not applicable for samples to be subjected to volatile organic analysis.

> ***CAUTION***
> Care must be exercised when using the remote sampler described in the next step because of potential instability of trench walls. In situations where someone must move closer than 2 feet to the excavation edge, a board or platform should be used to displace the sampler's weight to minimize the chance of collapse of the excavation edge. Fall protection should also be employed when working near the edges or trenches greater than 6 feet deep. An immediate means to extract people who have fallen into the trench will be immediately available. These means may include ladders or rope anchor points.

- Using the remote sampler shown in Attachment D, samples can be taken at the desired depth from the sidewall or bottom of the pit as follows:

  a. Scrape the face of the pit/trench using a long-handled shovel or hoe to remove the smeared zone that has contacted the backhoe bucket.

  b. Collect the sample directly into the sample jar, by scraping with the jar edge, eliminating the need for sample handling equipment and minimizing the likelihood of cross-contamination.

  c. Cap the sample jar, remove it from the remote sampler assembly, and package the sample for shipment in accordance with SOP SA-6.3.

- Complete documentation as described in SOP SA-6.3 and Attachment C of this SOP.

6.8.3.4 In-Pit Sampling

Under rare conditions, personnel may be required to enter the test pit/trench. This is necessary only when soil conditions preclude obtaining suitable samples from the backhoe bucket (e.g., excessive mixing of soil or wastes within the test pit/trench) or when samples from relatively small discrete zones within the test pit are required. This approach may also be necessary to sample any seepage occurring at discrete levels or zones in the test pit that are not accessible with remote samplers.

In general, personnel shall sample and log pits and trenches from the ground surface, except as provided for by the following criteria:

- There are no practical alternative means of obtaining such data.
- The SSO and Competent Person determine that such action can be accomplished without breaching site safety protocol. This determination will be based on actual monitoring of the pit/trench after it is dug (including, at a minimum, measurements of oxygen concentration, flammable gases, and toxic compounds, in that order). Action levels will be provided in project-specific planning documents.
- A company-designated Competent Person determines that the pit/trench is stable trough soil classification evaluation/inspections or is made stable (by cutting/grading the sidewalls or using shoring) prior to entrance of any personnel. OSHA requirements shall be strictly observed.

If these conditions are satisfied, only one person may enter the pit/trench. On potentially hazardous waste sites, this individual shall be dressed in selected PPE as required by the conditions in the pit. He/she shall be affixed to a harness and lifeline and continuously monitored while in the pit.

A second and possible third individual shall be fully dressed in protective clothing including a self-contained breathing device and on standby during all pit entry operations to support self rescue or assisted self rescue. The individual entering the pit shall remain therein for as brief a period as practical, commensurate with performance of his/her work. After removing the smeared zone, samples shall be obtained with a decontaminated trowel or spoon.

6.8.3.5 Geotechnical Sampling

In addition to the equipment described in Section 6.8.3.2, the following equipment is needed for geotechnical sampling:

- Soil sampling equipment, similar to that used in shallow drilled boring (i.e., thin-walled tube samplers), that can be pushed or driven into the floor of the test pit.
- Suitable driving (e,g., sledge hammer) or pushing (e.g., backhoe bucket) equipment used to advance the sampler into the soil.
- Knives, spatulas, and other suitable devices for trimming hand-carved samples.
- Suitable containers (bags, jars, tubes, boxes, etc.), labels, wax, etc. for holding and safely transporting collected soil samples.
- Geotechnical equipment (pocket penetrometer, torvane, etc.) for field testing collected soil samples for classification and strength properties.

Disturbed grab or bulk geotechnical soil samples may be collected for most soil in the same manner as comparable soil samples for chemical analysis. These collected samples may be stored in jars or plastic-lined sacks (larger samples), which will preserve their moisture content. Smaller samples of this type are usually tested for their index properties to aid in soil identification and classification: larger bulk samples are usually required to perform compaction tests.

Relatively undisturbed samples are usually extracted in cohesive soil using thin-walled tube samplers, and such samples are then tested in a geotechnical laboratory for their strength, permeability, and/or compressibility. The techniques for extracting and preserving such samples are similar to those used in performing Shelby tube sampling in borings, except that the sampler is advanced by hand or backhoe, rather than by a drill rig. Also, the sampler may be extracted from the test pit by excavation around the tube when it is difficult to pull it out of the ground. If this excavation requires entry of the test pit, the requirements described in Section 6.8.3.4 shall be followed. The thin-walled tube sampler shall be pushed or driven vertically into the floor or steps excavated in the test pit at the desired sampling elevations. Extracting tube samples horizontally from the walls of the test pit is not appropriate because the sample will not have the correct orientation.

A sledge hammer or backhoe may be used to drive or push the tube into the ground. Place a piece of wood over the top of the sampler or sampling tube to prevent damage during driving/pushing of the sample. Pushing the sampler with a constant thrust is always preferable to driving it with repeated blows, thus minimizing disturbance to the sample. When using a sledge hammer, it is recommended that the sampler be stabilized using a rope/strap wrench or pipe wrench to remove the person's hands holding the sampler from the strike zone. If the sample cannot be extracted by rotating it at least two revolutions (to shear off the sample at the bottom), hook the sampler to the excavator or backhoe and extract. This means an alternative head will be used as a connection point or that multiple choke hitches will be applied to extract the sampler. If this fails and the excavator can dig deeper without potentially impacting subsurface utilities, excavate the sampler. If this fails or if the excavator cannot be used due to subsurface utilities, hand-excavate to remove the soil from around the sides of the sampler. If hand-excavation requires entry into the test pit, the requirements in Section 6.8.3.4 must be followed. Prepare the sample as described in Steps 9 through 13 in Section 6.2.3, and label, pack and transport the sample in the required manner, as described in SOPs SA-6.3 and SA-6.1.

6.8.4 Backfilling of Trenches and Test Pits

All test pits and excavations must be either backfilled, covered, or otherwise protected at the end of each day. No excavations shall remain open during non-working hours unless adequately covered or otherwise protected.

Before backfilling, the onsite crew may photograph, if required by the project-specific work plan, all significant features exposed by the test pit and trench and shall include in the photograph a scale to show dimensions. Photographs of test pits shall be marked to include site number, test pit number, depth, description of feature, and date of photograph. In addition, a geologic description of each photograph shall be entered in the site logbook. All photographs shall be indexed and maintained as part of the project file for future reference.

After inspection, backfill material shall be returned to the pit under the direction of the FOL. Backfill should be returned to the trench or test pit in 6-inch to 1-foot lifts and compacted with the bucket. Remote controlled tampers or rollers may be lowered into the trench and operated from top side. This procedure will continue to the grade surface. It is recommended that the trench be tracked or rolled in. During excavation, clean soil from the top 2 feet may have been separated to be used to cover the last segments. Where these materials are not clean, it is recommended that clean fill be used for the top cover.

If a low-permeability layer is penetrated (resulting in groundwater flow from an upper contaminated flow zone into a lower uncontaminated flow zone), backfill material must represent original conditions or be impermeable. Backfill could consist of a soil-bentonite mix prepared in a proportion specified by the FOL (representing a permeability equal to or less than original conditions). Backfill can be covered by "clean" soil and graded to the original land contour. Revegetation of the disturbed area may also be required.

6.9 Records

The appropriate sample log sheet (see Attachment A of this SOP) must be completed by the site geologist/sampler for all samples collected. All soil sampling locations should be documented by tying in the location of two or more nearby permanent landmarks (building, telephone pole, fence, etc.) or obtaining GPS coordinates; and shall be noted on the appropriate sample log sheet, site map, or field notebook. Surveying may also be necessary, depending on the project requirements.

Test pit logs (see Attachment C of this SOP) shall contain a sketch of pit conditions. If the project-specific work plan requires photographs, at least one photograph with a scale for comparison shall be taken of each pit. Included in the photograph shall be a card showing the test pit number. Boreholes, test pits, and trenches shall be logged by the field geologist in accordance with SOP GH-1.5.

Other data to be recorded in the field logbook include the following:

- Name and location of job
- Date of boring and excavation
- Approximate surface elevation
- Total depth of boring and excavation
- Dimensions of pit
- Method of sample acquisition
- Type and size of samples
- Soil and rock descriptions
- Photographs if required
- Groundwater levels
- PID/FID/LEL/O_2 meter readings
- Other pertinent information, such as waste material encountered

In addition, site-specific documentation to be maintained by the SSO and/or Competent Person will be required including:

- Calibration logs
- Excavation inspection checklists

- Soil type classification

7.0 REFERENCES

American Society for Testing and Materials, 1987. ASTM Standards D1587-83 and D1586-84. ASTM Annual Book of Standards. ASTM. Philadelphia, Pennsylvania. Volume 4.08.

NUS Corporation, 1986. Hazardous Material Handling Training Manual.

NUS Corporation and CH2M Hill, August, 1987. Compendium of Field Operation Methods. Prepared for the U.S. EPA.

OSHA, Excavation, Trenching and Shoring 29 CFR 1926.650-653.

OSHA, Confined Space Entry 29 CFR 1910.146.

USEPA, November 2001. Environmental Investigations Standard Operating Procedures and Quality Assurance Manual.

ATTACHMENT A
SOIL & SEDIMENT SAMPLE LOG SHEET

Tetra Tech NUS, Inc.

SOIL & SEDIMENT SAMPLE LOG SHEET

Page___ of ___

Project Site Name: _____
Project No.: _____

[] Surface Soil
[] Subsurface Soil
[] Sediment
[] Other: _____
[] QA Sample Type: _____

Sample ID No.: _____
Sample Location: _____
Sampled By: _____
C.O.C. No.: _____

Type of Sample:
[] Low Concentration
[] High Concentration

GRAB SAMPLE DATA:

Date:	Depth	Color	Description (Sand, Silt, Clay, Moisture, etc.)
Time:			
Method:			
Monitor Reading (ppm):			

COMPOSITE SAMPLE DATA:

Date:	Time	Depth	Color	Description (Sand, Silt, Clay, Moisture, etc.)
Method:				
Monitor Readings (Range in ppm):				

SAMPLE COLLECTION INFORMATION:

Analysis	Container Requirements	Collected	Other

OBSERVATIONS / NOTES:

MAP:

Circle if Applicable:

MS/MSD	Duplicate ID No.:

Signature(s):

ATTACHMENT B
SPLIT-SPOON SAMPLER

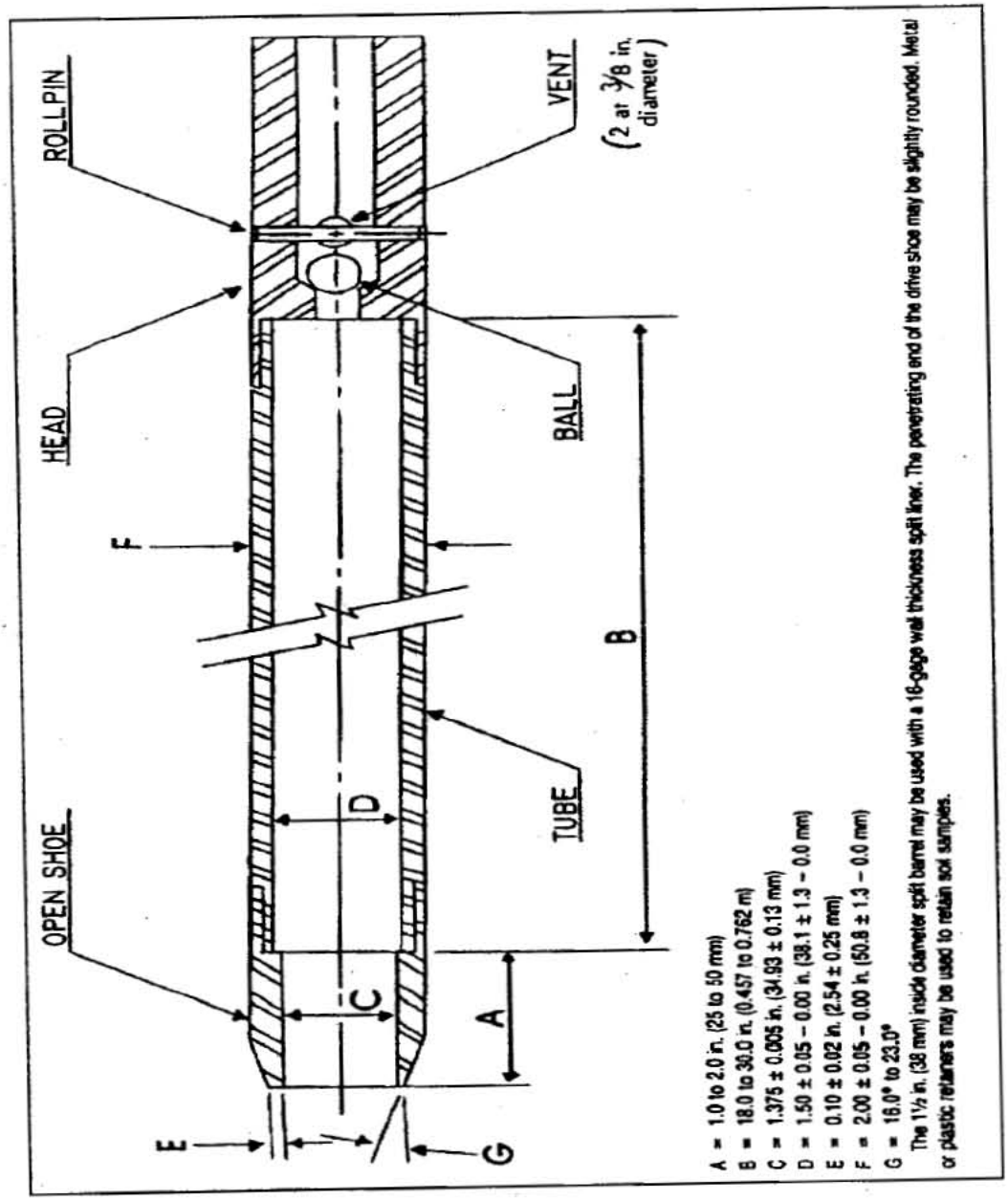

A = 1.0 to 2.0 in. (25 to 50 mm)
B = 18.0 to 30.0 in. (0.457 to 0.762 m)
C = 1.375 ± 0.005 in. (34.93 ± 0.13 mm)
D = 1.50 ± 0.05 – 0.00 in. (38.1 ± 1.3 – 0.0 mm)
E = 0.10 ± 0.02 in. (2.54 ± 0.25 mm)
F = 2.00 ± 0.05 – 0.00 in. (50.8 ± 1.3 – 0.0 mm)
G = 16.0° to 23.0°

The 1½ in. (38 mm) inside diameter split barrel may be used with a 16-gage wall thickness split liner. The penetrating end of the drive shoe may be slightly rounded. Metal or plastic retainers may be used to retain soil samples.

ATTACHMENT C
TEST PIT LOG

Tetra Tech NUS, Inc.

TEST PIT LOG

Page ___ of ___

PROJECT NAME: _____ TEST PIT No.: _____
PROJECT NUMBER: _____ DATE: _____
LOCATION: _____ GEOLOGIST: _____

Depth (Ft.)	Lithology Change (Depth/Ft.)	MATERIAL DESCRIPTION Soil/Waste Characteristics (lithology, density, color, etc.)	USCS	Remarks	PID/FID READING Source (ppm)	BZ (ppm)

TEST PIT CROSS SECTION AND / OR PLAN VIEW

REMARKS: _____

PHOTO LOG: _____

ATTACHMENT D
REMOTE SAMPLE HOLDER FOR TEST PIT/TRENCH SAMPLING

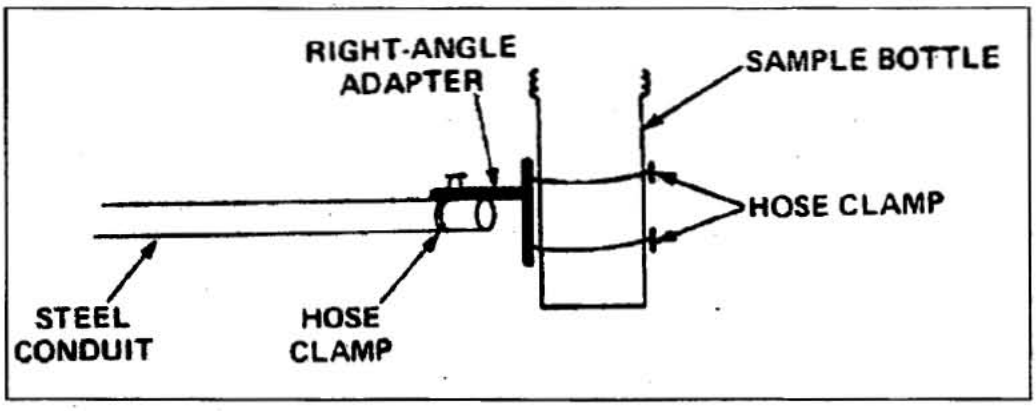

TABLE OF CONTENTS

SECTION **PAGE**

1.0 PURPOSE **2**

2.0 SCOPE **2**

3.0 GLOSSARY **2**

4.0 RESPONSIBILITIES **2**

5.0 SOIL SAMPLING PROCEDURES **3**

5.1 GENERAL 3
5.2 SAMPLING EQUIPMENT 3
5.3 DPT SAMPLING METHODOLOGY 3

6.0 GROUNDWATER SAMPLING PROCEDURES **4**

6.1 GENERAL 4
6.2 SAMPLING EQUIPMENT 4
6.3 DPT TEMPORARY WELL POINT INSTALLATION AND SAMPLING METHODOLOGY 5

7.0 RECORDS **5**

ATTACHMENTS

1 SAFE WORK PERMIT 6

1.0 PURPOSE

The purpose of this procedure is to provide general reference information on Direct Push Technology (DPT). DPT is designed to collect soil, groundwater, and soil gas samples without using conventional drilling techniques. The advantage of using DPT over conventional drilling includes the generation of little or no drill cuttings, sampling in locations with difficult accessibility, reduced overhead clearance requirements, no fluid introduction during probing, and typical lower costs per sample than with conventional techniques. Disadvantages include a maximum penetration depth of approximately 15 to 40 feet in dense soils (although it may be as much as 60 to 80 feet in certain types of geological environments), reduced capability of obtaining accurate water-level measurements, and the inability to install permanent groundwater monitoring wells. The methods and equipment described herein are for collection of surface and subsurface soil samples and groundwater samples. Soil gas sampling is discussed in SOP SA-2.4.

2.0 SCOPE

This procedure provides information on proper sampling equipment and techniques for DPT. Review of the information contained herein will facilitate planning of the field sampling effort by describing standard sampling techniques. The techniques described shall be followed whenever applicable, noting that site-specific conditions or project-specific plans may require adjustments in methodology.

3.0 GLOSSARY

Direct Push Technology (DPT) - DPT refers to sampling tools and sensors that are driven directly into the ground without the use of conventional drilling equipment. DPT typically utilizes hydraulic pressure and/or percussion hammers to advance the sampling tools. A primary advantage of DPT over conventional drilling techniques is that DPT results in the generation of little or no investigation derived waste.

Geoprobe® - Geoprobe® is a manufacturer of a hydraulically-powered, percussion/probing machines utilizing DPT to collect subsurface environmental samples. Geoprobe® relies on a relatively small amount of static weight (vehicle) combined with percussion as the energy for advancement of a tool string. The Geoprobe® equipment can be mounted in a multitude of vehicles for access to all types of environmental sites.

HydroPunch™ - HydroPunch™ is a manufacturer of stainless steel and Teflon® sampling tools that are capable of collecting representative groundwater and/or soil samples without requiring the installation of a groundwater monitoring well or conventional soil boring. HydroPunch™ is an example of DPT sampling equipment.

Flame Ionization Detector (FID) - A portable instrument for the measurement of many combustible organic compounds and a few inorganic compounds in air at parts-per million levels. The basis for the detection is the ionization of gaseous species utilizing a flame as the energizing source.

Photo Ionization Detector (PID) - A portable instrument for the measurement of many combustible organic compounds and a few inorganic compounds in air at parts-per million levels. The basis for the detection is the ionization of gaseous species utilizing ultraviolet radiation as the energizing source.

4.0 RESPONSIBILITIES

Project Manager - The Project Manager is responsible for selecting and/or reviewing the appropriate DPT drilling procedure required to support the project objectives.

Field Operations Leader (FOL)- The FOL is primarily responsible for performing the DPT in accordance with the project-specific plan.

5.0 SOIL SAMPLING PROCEDURES

5.1 General

The common methodology for the investigation of the vadose zone is soil boring drilling and soil sampling. However, drilling soil borings can be very expensive. Generally the advantage of DPT for subsurface soil sampling is the reduced cost of disposal of drilling cuttings and shorter sampling times.

5.2 Sampling Equipment

Equipment needed for conducting DPT drilling for subsurface soil sampling includes, but is not limited to, the following:

- Geoprobe® Sampling Kit
- Cut-resistant gloves
- 4-foot x 1.5-inch diameter macrocore sampler
- Probe sampling adapters
- Roto-hammer with 1.5-inch bit
- Disposable acetate liners for soil macrocore sampler
- Cast aluminum or steel drive points
- Geoprobe® AT-660 Series Large Bore Soil Sampler, or equivalent
- Standard decontamination equipment and solutions

For health and safety equipment and procedures, follow the direction provided in the Safe Work Permit in Attachment 1, or the more detailed directions provided in the project's Health and Safety Plan.

5.3 DPT Sampling Methodology

There are several methods for the collection of soil samples using DPT drilling. The most common method is discussed in the following section. Variations of the following method may be conducted upon approval of the Project Manager in accordance with the project-specific plan.

- Macrocore samplers fitted with detachable aluminum or steel drive points are driven into the ground using hydraulic pressure. If there is concrete or pavement over a sampling location, a Roto-hammer is used to drill a minimum 1.5-inch diameter hole through the surface material. A Roto-hammer may also be used if very dense soils are encountered.

- The sampler is advanced continuously in 4-foot intervals or less if desired. No soil cuttings are generated because the soil which is not collected in the sampler is displaced within the formation.

- The sampler is retracted from the hole, and the 4-foot continuous sample is removed from the outer coring tube. The sample is contained within an inner acetate liner.

- Attach the metal trough from the Geoprobe® Sampling Kit firmly to the tail gate of a vehicle. If a vehicle with a tail gate is not available, secure the trough on another suitable surface.

- Place the acetate liner containing the soils in the trough.

- While wearing cut-resistant gloves (constructed of leather or other suitable material), cut the acetate liner through its entire length using the double-bladed knife that accompanies the Geoprobe® Sampling Kit. Then remove the strip of acetate from the trough to gain access to the collected soils. Do not attempt to cut the acetate liner while holding it in your hand.

- Field screen the sample with an FID or PID, and observe/examine the sample (according to SOP GH-1.3). If appropriate, transfer the sample to sample bottles for laboratory analysis. If additional volume is required, push an additional boring adjacent to the first and composite/mix the same interval. Field compositing is usually not acceptable for sample requiring volatile organics analysis.

- Once sampling has been completed, the hole is backfilled with bentonite chips or bentonite cement grout, depending upon project requirements. Asphalt or concrete patch is used to cap holes through paved or concrete areas. All holes should be finished smooth to existing grade.

- In the event the direct push van/truck cannot be driven to a remote location or a sampling location with difficult accessibility, sampling probes may be advanced and sampled manually or with air/electric operated equipment (e.g., jack hammer).

- Sampling equipment is decontaminated prior to collecting the next sample.

6.0 GROUNDWATER SAMPLING PROCEDURES

6.1 General

The most common methodology for the investigation of groundwater is the installation and sampling of permanent monitoring wells. If only groundwater screening is required, the installation and sampling of temporary well points may be performed. The advantage of temporary well point installation using DPT is reduced cost due to no or minimal disposal of drilling cuttings and well construction materials, and shorter installation/times sampling.

Two disadvantages of DPT drilling for well point installation are:

- In aquifers with low yields, well points may have to be sampled without purging or development.
- If volume requirements are high, this method can be time consuming for low yield aquifers.

6.2 Sampling Equipment

Equipment needed for temporary well installation and sampling using DPT includes, but is not limited, to the following:

- 2-foot x 1-inch diameter mill-slotted (0.005 to 0.02-inch) well point
- Connecting rods
- Roto-hammer with 1.5-inch bit
- Mechanical jack
- 1/4-inch OD polyethylene tubing
- 3/8-inch OD polyethylene tubing
- Peristaltic pump
- Standard decontamination equipment and solutions

6.3 DPT Temporary Well Point Installation and Sampling Methodology

There are several methods for the installation and sampling of temporary well points using DPT. The most common methodology is discussed below. Variations of the following method may be conducted upon approval of the Project Manager in accordance with the project specific plan.

- A 2-foot x 1-inch diameter mill-slotted (0.005 to 0.02-inch) well point attached to connecting rods is driven into the ground to the desired depth using a rotary electric hammer or other direct push drill rig. If there is concrete or pavement over a sampling location, a Roto-hammer or electric coring machine is used to drill a hole through the surface material.

- The well point will be allowed to equilibrate for at least 15 minutes, after which a measurement of the static water level will be taken. The initial measurement of the water level will be used to assess the amount of water which is present in the well point and to determine the amount of silt and sand infiltration that may have occurred.

- The well point will be developed using a peristaltic pump and polyethylene tubing to remove silt and sand which may have entered the well point. The well point is developed by inserting polyethylene tubing to the bottom of the well point and lifting and lowering the tubing slightly while the pump is operating. The pump will be operated at a maximum rate of approximately 2 liters per minute. After removal of sediment from the bottom of the well point, the well point will be vigorously pumped at maximum capacity until discharge water is visibly clear and no further sediments are being generated. Measurements of pH, specific conductance, temperature, and turbidity shall be recorded every 5 to 10 minutes during the purging process. After two consistent readings of pH, specific conductance, temperature and turbidity ($\pm$10 percent), the well may be sampled.

- A sample will be collected using the peristaltic pump set at the same or reduced speed as during well development. Samples (with the exception of the samples to be analyzed for volatile organic compounds, VOCs) will be collected directly from the pump discharge. Sample containers for VOCs will be filled by (first shutting off the pump) crimping the discharge end of the sample tubing when filled, removing the inlet end of the sample tubing from the well, suspending the inlet tubing above the vial, and allowing water to fill each vial by gravity flow.

- Once the groundwater sample has been collected, the connecting rods and well point will be removed from the hole with the direct push rig hydraulics. The hole will be backfilled with bentonite chips or bentonite cement grout, depending upon project requirements. Asphalt or concrete patch will be used to cap holes through paved or concrete areas. All holes will be finished smooth to existing grade.

- In the event the direct push van/truck cannot be driven to a remote location or sampling location with difficult accessibility, sampling probes may be advanced and sampled manually or with air/electric-operated equipment (e.g., jack hammer).

- Decontaminate the equipment before moving to the next location.

7.0 RECORDS

A record of all field procedures, tests, and observations must be recorded in the field logbook, boring logs, and sample log sheets, as needed. Entries should include all pertinent data regarding the investigation. The use of sketches and field landmarks will help to supplement the investigation and evaluation.

ATTACHMENT 1
SAFE WORK PERMIT FOR DPT OPERATIONS

Permit No. _____ Date: _____ Time: From _____ to _____

SECTION I: General Job Scope

I. Work limited to the following (description, area, equipment used): **Monitoring well drilling and installation through direct push technology**

II. Required Monitoring Instruments: _____

III. Field Crew: _____

IV. On-site Inspection conducted ☐ Yes ☐ No Initials of Inspector _____ _____
TtNUS

SECTION II: General Safety Requirements (To be filled in by permit issuer)

V. Protective equipment required
Level D ☒ Level B ☐
Level C ☐ Level A ☐
Detailed on Reverse

Respiratory equipment required
Full face APR ☐ Escape Pack ☐
Half face APR ☐ SCBA ☐
SKA-PAC SAR ☐ Bottle Trailer ☐
Skid Rig ☐ None ☒

Level D Minimum Requirements: Sleeved shirt and long pants, safety footwear, and work gloves. Safety glasses, hard hats, and hearing protection will be worn when working near or sampling in the vicinity of the DPT rig.

Modifications/Exceptions.

VI. Chemicals of Concern | Action Level(s) | Response Measures

VII. Additional Safety Equipment/Procedures

Hard-hat	☒ Yes	☐ No	Hearing Protection (Plugs/Muffs)	☒ Yes	☐ No
Safety Glasses	☒ Yes	☐ No	Safety belt/harness	☐ Yes	☒ No
Chemical/splash goggles	☐ Yes	☒ No	Radio	☐ Yes	☒ No
Splash Shield	☐ Yes	☒ No	Barricades	☒ Yes	☐ No
Splash suits/coveralls	☐ Yes	☐ No	Gloves (Type - _____)	☐ Yes	☐ No
Steel toe Work shoes or boots	☒ Yes	☐ No	Work/warming regimen	☐ Yes	☐ No

Modifications/Exceptions: Reflective vests for high traffic areas.

VIII. Procedure review with permit acceptors

	Yes	NA		Yes	NA
Safety shower/eyewash (Location & Use)	☐	☒	Emergency alarms	☐	☐
Daily tail gate meetings	☒	☐	Evacuation routes	☐	☐
Contractor tools/equipment/PPE inspected	☐	☐	Assembly points	☐	☐

IX. Site Preparation

Utility Clearances obtained for areas of subsurface investigation	☐ Yes	☐ No
Physical hazards removed or blockaded	☐ Yes	☐ No
Site control boundaries demarcated/signage	☐ Yes	☐ No

X. Equipment Preparation

	Yes	NA
Equipment drained/depressurized	☐	☒
Equipment purged/cleaned	☐	☒
Isolation checklist completed	☐	☒
Electrical lockout required/field switch tested	☐	☒
Blinds/misalignments/blocks & bleeds in place	☐	☒
Hazardous materials on walls/behind liners considered	☐	☒

XI. Additional Permits required (Hot work, confined space entry). ☐ Yes ☐ No
If yes, complete permit required or contact Health Sciences, Pittsburgh Office

XII. Special instructions, precautions:

Permit Issued by: _____ Permit Accepted by: _____

TABLE OF CONTENTS

SECTION **PAGE**

1.0 PURPOSE **2**

2.0 SCOPE **2**

3.0 GLOSSARY **2**

4.0 RESPONSIBILITIES AND PERSONNEL QUALIFICATIONS **2**

5.0 PROCEDURES **2**

5.1 SITE LOGBOOK 2
5.1.1 General 2
5.1.2 Photographs 3
5.2 FIELD NOTEBOOKS 3
5.3 FIELD FORMS 4
5.3.1 Sample Collection, Labeling, Shipment, Request for Analysis, and Field Test Results. 4
5.3.2 Hydrogeological and Geotechnical Forms 5
5.3.3 Equipment Calibration and Maintenance Form 6
5.4 FIELD REPORTS 6
5.4.1 Daily Activities Report 7
5.4.2 Weekly Status Reports 7

6.0 LISTING OF FIELD FORMS ON THE TtNUS INTRANET SITE **7**

ATTACHMENTS

A TYPICAL SITE LOGBOOK ENTRY **9**
B SAMPLE LABEL **10**
C CHAIN-OF-CUSTODY RECORD FORM **11**
D CHAIN-OF-CUSTODY SEAL **12**

1.0 PURPOSE

The purpose of this Standard Operating Procedure (SOP) is to identify and designate the field data record forms, logs, and reports generally initiated and maintained for documenting Tetra Tech NUS, Inc. (TtNUS) field activities.

2.0 SCOPE

Documents presented within this SOP (or equivalents) shall be used for all TtNUS field activities, as applicable. Other or additional documents may be required by specific client contracts or project planning documents.

3.0 GLOSSARY

None.

4.0 RESPONSIBILITIES AND PERSONNEL QUALIFICATIONS

Project Manager (PM) - The PM is responsible for obtaining hardbound controlled-distribution logbooks (from the appropriate source), as needed. In addition, the Project Manager is responsible for placing all field documentation used in site activities (i.e., records, field reports, sample data sheets, field notebooks, and the site logbook) in the project's central file upon the completion of field work.

Field Operations Leader (FOL) - The FOL is responsible for ensuring that the site logbook, notebooks, and all appropriate and current forms and field reports included in this SOP (and any additional forms required by the contract) are correctly used, accurately filled out, and completed in the required time frame.

General personnel qualifications for field documentation activities include the following:

- Occupational Safety and Health Administration (OSHA) 40-hour and applicable refresher training.
- Capability of performing field work under the expected physical and environmental (i.e., weather) conditions.
- Familiarity with appropriate procedures for documentation, handling, packaging, and shipping.

5.0 PROCEDURES

5.1 SITE LOGBOOK

5.1.1 General

The site logbook is a hard-bound, paginated, controlled-distribution record book in which all major on-site activities are documented. At a minimum, record or reference the following activities/events (daily) in the site logbook:

- All field personnel present
- Arrival/departure times and names of site visitors
- Times and dates of health and safety training
- Arrival/departure times of equipment
- Times and dates of equipment calibration

- Start and/or completion of borehole, trench, monitoring well installation activities, etc.
- Daily on-site activities
- Sample pickup information
- Health and safety issues (level of protection, personal protective equipment [PPE], etc.)
- Weather conditions

Maintain a site logbook for each project and initiate it at the start of the first on-site activity (e.g., site visit or initial reconnaissance survey). Make entries every day that on-site activities take place involving TtNUS or subcontractor personnel. Upon completion of the fieldwork, provide the site logbook to the PM or designee for inclusion in the project's central file.

Record the following information on the cover of each site logbook:

- Project name
- TtNUS project number
- Sequential book number
- Start date
- End date

Information recorded daily in the site logbook need not be duplicated in other field notebooks (see Section 5.2) but must summarize the contents of these other notebooks and refer to specific page locations in these notebooks for detailed information (where applicable). An example of a typical site logbook entry is shown in Attachment A.

If measurements are made at any location, either record the measurements and equipment used in the site logbook or reference the field notebook in which the measurements are recorded (see Attachment A).

Make all logbook, notebook, and log sheet entries in indelible ink (black pen is preferred). No erasures are permitted. If an incorrect entry is made, cross out the entry with a single strike mark, initial, and date it. At the completion of entries by any individual, the logbook pages used must be signed and dated by the person making the entries. The site logbook must also be signed by the FOL at the end of each day.

5.1.2 Photographs

Sequentially number movies, slides, or photographs taken of a site or any monitoring location to correspond to logbook/notebook entries. Enter the name of the photographer, date, time, site location, site description, and weather conditions in the logbook/notebook as the photographs are taken. A series entry may be used for rapid-sequence photographs. The photographer is not required to record the aperture settings and shutter speeds for photographs taken within the normal automatic exposure range. However, special lenses, films, filters, and other image-enhancement techniques must be noted in the logbook/notebook. If possible, such techniques shall be avoided because they can adversely affect the accuracy of photographs. Chain-of-custody procedures depend on the subject matter, type of camera (digital or film), and the processing it requires. Follow chain-of-custody procedures for film used for aerial photography, confidential information, or criminal investigation. After processed, consecutively number the slides of photographic prints and label them according to the logbook/notebook descriptions. Docket the site photographs and associated negatives and/or digitally saved images to compact disks into the project's central file.

5.2 FIELD NOTEBOOKS

Key field team personnel may maintain a separate dedicated field notebook to document the pertinent field activities conducted directly under their supervision. For example, on large projects with multiple investigative sites and varying operating conditions, the Health and Safety Officer may elect to maintain a

separate field notebook. Where several drill rigs are in operation simultaneously, each site geologist assigned to oversee a rig must maintain a field notebook.

5.3 FIELD FORMS

All TtNUS field forms (see list in Section 6.0 of this SOP) can be found on the company's intranet site (http://intranet.ttnus.com) under Field Log Sheets. Forms may be altered or revised for project-specific needs, subject to client approval. Care must be taken to ensure that all essential information can be documented. Guidelines for completing these forms can be found in the related sampling SOPs.

5.3.1 Sample Collection, Labeling, Shipment, Request for Analysis, and Field Test Results

5.3.1.1 Sample Log Sheet

Sample log sheets are used to record specified types of data while sampling. The data recorded on these sheets are useful in describing the sample as well as pointing out any problems, difficulties, or irregularities encountered during sampling. Complete a sample log sheet for each sample obtained, including field quality control (QC) samples.

5.3.1.2 Sample Label

A typical sample label is illustrated in Attachment B. Complete the required information on the adhesive labels and apply them to every sample container. Obtain sample labels from the appropriate program/project source, request that they be electronically generated in house, or request them the laboratory subcontractor.

5.3.1.3 Chain-of-Custody Record

The chain-of-custody record is a multi-part form that is initiated as samples are acquired and accompanies a sample (or group of samples) as they are transferred from person to person. This form must be used as follows for any samples collected for chemical or geotechnical analysis whether the analyses are performed on site or off site:

- Retain one carbonless copy of the completed chain-of custody form in the field.
- Send one copy is sent to the PM (or designee)
- Send the original to the laboratory with the associated samples. Place the original (top, signed copy) of the chain-of custody form inside a large Ziploc®-type bag taped inside the lid of the shipping cooler. If multiple coolers are sent but are included on one chain-of custody form, send the form with the cooler containing vials for volatile organic compound (VOC) analysis or the cooler with the air bill attached. Indicate on the air bill how many coolers are included with that shipment.

An example of a chain-of-custody form is provided as Attachment C. After the samples are received at the laboratory, the sample cooler and contents are checked and any problems are noted on the enclosed chain-of custody form (any discrepancies between the sample labels and chain-of custody form and any other problems that are noted are resolved through communication between the laboratory point-of-contact and the TtNUS PM). The chain-of custody form is signed and copied. The laboratory will retain the copy, and the original becomes part of the samples' corresponding analytical data package.

5.3.1.4 Chain-of-Custody Seal

Attachment D is an example of a custody seal. The custody seal is an adhesive-backed label that is part of a chain-of-custody process and is used to prevent tampering with samples after they have been collected in the field and sealed in coolers for transport to the laboratory. Sign and date custody seals

and affix them across the lid and body of each cooler (front and back) containing environmental samples (see SOP SA-6.1). Obtain custody seals from the laboratory (if available) or purchase them from a supplier.

5.3.1.5 Geochemical Parameters Log Sheets

Complete Field Analytical Log Sheets to record geochemical and/or natural attenuation field test results.

5.3.2 Hydrogeological and Geotechnical Forms

5.3.2.1 Groundwater Level Measurement Sheet

Complete a Groundwater Level Measurement Sheet for each round of water level measurements made at a site.

5.3.2.2 Data Sheet for Pumping Test

During the performance of a pumping test (or an in-situ hydraulic conductivity test), a large amount of data must be recorded, often within a short time period. Use a Pumping Test Data Sheet to facilitate this task by standardizing the data collection format for the pumping well and observation wells, and allowing the time interval for collection to be established in advance.

5.3.2.3 Packer Test Report Form

Complete a Packer Test Report Form for each well at which a packer test is conducted.

5.3.2.4 Boring Log

Complete a Summary Log of Boring, or Boring Log for each soil boring performed to document the materials encountered, operation and driving of casing, and locations/depths of samples collected. In addition, if volatile organics are monitored on cores, samples, cuttings from the borehole, or breathing zone, (using a photoionization detector [PID] or flame ionization detector [FID]), enter these readings on the boring log at the appropriate depth. When they become available, enter the laboratory sample number, concentrations of key contaminants, or other pertinent information in the "Remarks" column. This feature allows direct comparison of contaminant concentrations with soil characteristics.

5.3.2.5 Monitoring Well Construction Details Form

Complete a Monitoring Well Construction Details Form for every monitoring well, piezometer, or temporary well point installed. This form contains specific information on length and type of well riser pipe and screen, backfill, filter pack, annular seal and grout characteristics, and surface seal characteristics. This information is important in evaluating the performance of the monitoring well, particularly in areas where water levels show temporal variation or where there are multiple (immiscible) phases of contaminants. Depending on the type of monitoring well (in overburden or bedrock, stick-up or flush mount), different forms are used.

5.3.2.6 Test Pit Log

When a test pit or trench is constructed for investigative or sampling purposes, a Test Pit Log must be filled out by the responsible field geologist or sampling technician.

5.3.2.7 Miscellaneous Monitoring Well Forms

Miscellaneous monitoring well forms that may be required on a project-specific basis include the Monitoring Well Materials Certificate of Conformance and Monitoring Well Development Record. Use a Monitoring Well Materials Certificate of Conformance to document all materials utilized during each monitoring well installation. Use a Monitoring Well Development Record to document all well development activities.

5.3.2.8 Miscellaneous Field Forms – Quality Assurance and Checklists

Miscellaneous field forms/checklists forms that may be required on a project-specific basis include the following:

- Container Sample and Inspection Sheet – use this form when a container (drum, tank, etc.) is sampled and/or inspected.
- QA Sample Log Sheet – use this form when a QA sample such as an equipment rinsate blank, source blank, etc. is collected.
- Field Task Modification Request (FTMR) – use this form to document deviations from the project planning documents. The FOL is responsible for initiating the FTMRs. Maintain copies of all FTMRs with the on-site planning documents, and place originals in the final evidence file.
- Field Project Daily Activities Checklist and Field Project Pre-Mobilization Checklist – used these during both the planning and field effort to ensure that all necessary tasks are planned for and completed. These two forms are not requirements but are useful tools for most field work.

5.3.3 Equipment Calibration and Maintenance Form

The calibration or standardization of monitoring, measuring, or test equipment is necessary to ensure the proper operation and response of the equipment, to document the accuracy, precision, or sensitivity of the measurements, and determine if correction should be applied to the readings. Some items of equipment require frequent calibration, others infrequent. Some are calibrated by the manufacturer, others by the user.

Each instrument requiring calibration has its own Equipment Calibration Log, which documents that the manufacturer's instructions were followed for calibration of the equipment, including frequency and type of standard or calibration device. Maintain an Equipment Calibration Log for each electronic measuring device used in the field; make entries for each day the equipment is used or in accordance with manufacturer recommendations.

5.4 FIELD REPORTS

The primary means of recording on-site activities is the site logbook. Other field notebooks may also be maintained. These logbooks and notebooks (and supporting forms) contain detailed information required for data interpretation or documentation but are not easily used for tracking and reporting of progress. Furthermore, the field logbook/notebooks remain on site for extended periods of time and are thus not accessible for timely review by project management. Other reports useful for tracking and reporting the progress of field activities are described below.

5.4.1 Daily Activities Report

To provide timely oversight of on-site contractors, complete and submit Daily Activities Reports (DARs) as described below.

5.4.1.1 Description

The DAR documents the activities and progress for each day's field work. Complete this report on a daily basis whenever there are drilling, test pitting, well construction, or other related activities occurring that involve subcontractor personnel. These sheets summarize the work performed and form the basis of payment to subcontractors. The DAR form can be found on the TtNUS intranet site.

5.4.1.2 Responsibilities

It is the responsibility of the rig geologist to complete the DAR and obtain the driller's signature acknowledging that the times and quantities of material entered are correct.

5.4.1.3 Submittal and Approval

At the end of the shift, the rig geologist must submit the DAR to the FOL for review and filing. The Daily Activities Report is not a formal report and thus requires no further approval. The DARs are retained by the FOL for use in preparing the site logbook and in preparing weekly status reports for submission to the PM.

5.4.2 Weekly Status Reports

To facilitate timely review by project management, photocopies of logbook/notebook entries may be made for internal use.

In addition to those described herein, other summary reports may also be contractually required.

All TtNUS field forms can be found on the company's intranet site at http://intranet.ttnus.com under Field Log Sheets.

6.0 LISTING OF FIELD FORMS ON THE TtNUS INTRANET SITE

- Boring Log
- Container Sample and Inspection Sheet
- Daily Activities Checklist
- Daily Activities Record
- Equipment Calibration Log
- Field Task Modification Request
- Field Analytical Log sheet - Geochemical Parameters
- Groundwater Level Measurement Sheet
- Groundwater Sample Log Sheet
- Hydraulic Conductivity Test Data Sheet
- Low Flow Purge Data Sheet
- Bedrock Monitoring Well Construction (Stick Up)
- Bedrock Monitoring Well Construction Flush Mount
- Bedrock Monitoring Well Construction Open Hole
- Confining Layer Monitoring Well Construction
- Monitoring Well Development Record

- Monitoring Well Materials Certificate of Conformance
- Overburden Monitoring Well Construction Flush Mount
- Overburden Monitoring Well Construction Stick Up
- Packer Test Report Form
- Pumping Test Data Sheet
- QA Sample Log Sheet
- Soil/Sediment Sample Log Sheet
- Surface Water Sample Log Sheet
- Test Pit Log
- Field Project Pre-Mobilization Checklist

ATTACHMENT A
TYPICAL SITE LOGBOOK ENTRY

START TIME: _____ DATE: _____

SITE LEADER: _____
PERSONNEL:

TtNUS	DRILLER	SITE VISITORS
_____	_____	_____
_____	_____	_____
_____	_____	_____

WEATHER: Clear, 68°F, 2-5 mph wind from SE

ACTIVITIES:

1. Steam jenney and fire hoses were set up.
2. Drilling activities at well ____ resumes. Rig geologist was _____. See Geologist's Notebook, No. 1, page 29-30, for details of drilling activity. Sample No. 123-21-S4 collected; see sample logbook, page 42. Drilling activities completed at 11:50 and a 4-inch stainless steel well installed. See Geologist's Notebook, No. 1, page 31, and well construction details for well _____.
3. Drilling rig No. 2 steam-cleaned at decontamination pit. Then set up at location of well _____.
4. Well _____ drilled. Rig geologist was _____. See Geologist's Notebook, No. 2, page ____ for details of drilling activities. Sample numbers 123-22-S1, 123-22-S2, and 123-22-S3 collected; see sample logbook, pages 43, 44, and 45.
5. Well _____ was developed. Seven 55-gallon drums were filled in the flushing stage. The well was then pumped using the pitcher pump for 1 hour. At the end of the hour, water pumped from well was "sand free."
6. EPA remedial project manger arrives on site at 14:25 hours.
7. Large dump truck arrives at 14:45 and is steam-cleaned. Backhoe and dump truck set up over test pit _____.
8. Test pit _____ dug with cuttings placed in dump truck. Rig geologist was _____. See Geologist's Notebook, No. 1, page 32, for details of test pit activities. Test pit subsequently filled. No samples taken for chemical analysis. Due to shallow groundwater table, filling in of test pit ___ resulted in a very soft and wet area. A mound was developed and the area roped off.
9. Express carrier picked up samples (see Sample Logbook, pages 42 through 45) at 17:50 hours. Site activities terminated at 18:22 hours. All personnel off site, gate locked.

_____

Field Operations Leader

ATTACHMENT B
SAMPLE LABEL

Tetra Tech NUS, Inc. 661 Andersen Drive Pittsburgh, 15220 (412)921-7090		Project: Site: Location:	
Sample No:			Matrix:
Date:	Time:	Preserve:	
Analysis:			
Sampled by:		Laboratory:	

ATTACHMENT C
CHAIN-OF-CUSTODY RECORD FORM

TETRA TECH NUS, INC. CHAIN OF CUSTODY | NUMBER 3413 | PAGE ____ OF _____

PROJECT NO:	FACILITY:	PROJECT MANAGER	PHONE NUMBER	LABORATORY NAME AND CONTACT:
SAMPLERS (SIGNATURE)		FIELD OPERATIONS LEADER	PHONE NUMBER	ADDRESS
		CARRIER/WAYBILL NUMBER		CITY, STATE

STANDARD TAT ☐
RUSH TAT ☐
☐ 24 hr. ☐ 48 hr. ☐ 72 hr. ☐ 7 day ☐ 14 day

CONTAINER TYPE PLASTIC (P) or GLASS (G)
PRESERVATIVE USED
TYPE OF ANALYSIS

DATE YEAR	TIME	SAMPLE ID	LOCATION ID	TOP DEPTH (FT)	BOTTOM DEPTH (FT)	MATRIX (GW, SO, SW, SD, QC, ETC.)	COLLECTION METHOD GRAP (G) COMP (C)	No. OF CONTAINERS									COMMENTS

1. RELINQUISHED BY	DATE	TIME	1. RECEIVED BY	DATE	TIME
2. RELINQUISHED BY	DATE	TIME	2. RECEIVED BY	DATE	TIME
3. RELINQUISHED BY	DATE	TIME	3. RECEIVED BY	DATE	TIME

COMMENTS

DISTRIBUTION: WHITE (ACCOMPANIES SAMPLE) YELLOW (FIELD COPY) PINK (FILE COPY)

4/02R
FORM NO. TtNUS-001

ATTACHMENT D
CHAIN-OF-CUSTODY SEAL

CUSTODY SEAL

Date

Signature

CUSTODY SEAL

Date

Signature

TABLE OF CONTENTS

SECTION **PAGE**

1.0 PURPOSE **2**

2.0 SCOPE AND APPLICABILITY **2**

3.0 GLOSSARY **2**

4.0 RESPONSIBILITIES AND PERSONNEL QUALIFICATIONS **3**

5.0 HEALTH AND SAFETY **3**

6.0 EQUIPMENT LIST **3**

7.0 PROCEDURES **4**

7.1 Decontamination Pad Design/Construction Considerations **5**
7.1.1 Temporary Decontamination Pads 5
7.1.2 Decontamination Activities at Drill Rigs/DPT Units 7
7.1.3 Decontamination Activities at Remote Sample Locations 7
7.2 Equipment Decontamination Procedures **7**
7.2.1 Monitoring Well Sampling Equipment 7
7.2.2 Downhole Drilling Equipment 9
7.2.3 Soil/Sediment Sampling Equipment 11
7.3 Contact Waste/Materials **11**
7.3.1 Investigation-Derived Wastes - Decontamination Wash Waters and Sediments 12
7.4 Decontamination Evaluation **13**

ATTACHMENTS

A INVESTIGATION-DERIVED WASTE LABEL 15

1.0 PURPOSE

Decontamination is the process of removing and/or neutralizing site contaminants that have contacted and/or accumulated on equipment. The purpose of this Standard Operating Procedure (SOP) is to protect site personnel, the general public, and the environment while preserving or maintaining sample integrity. It is further intended through this procedure to describe the steps necessary for proper decontamination of drilling equipment, earth-moving equipment , chemical sampling equipment and field operation and analytical equipment.

2.0 SCOPE AND APPLICABILITY

This procedure applies to all equipment used to provide access to/acquire environmental samples that may have become contaminated through direct contact with contaminated media including air, water, and soil. This equipment includes drilling and heavy equipment and chemical sampling and field analytical equipment. Where technologically and economically feasible, single-use sealed disposable equipment will be employed to minimize the potential for cross-contamination. This SOP also provides general reference information on the control of contaminated materials.

Decontamination methods and equipment requirements may differ from one project to another. General equipment items are specified in Section 6.0, but project-specific equipment must be obtained to address the project-specific decontamination procedures presented in Section 7.0 and applicable subsections.

3.0 GLOSSARY

Alconox/Liquinox - A brand of phosphate-free laboratory-grade detergent.

Decontamination Solution - A solution selected/identified in the Health and Safety Plan or Project-Specific Quality Assurance Plan. The solution is selected and employed as directed by the project chemist/health and safety professional.

Deionized Water (DI) - Tap water that has been treated by passing through a standard deionizing resin column. This water may also pass through additional filtering media to attain various levels of analyte-free status. The DI water should meet College of American Pathologists (CAP) and National Committee for Clinical Laboratory Standards (NCCLS) specifications for reagent-grade Type I water.

Potable Water - Tap water from any municipal water treatment system. Use of an untreated potable water supply is not an acceptable substitute for tap water.

Pressure Washing - Process employing a high-pressure pump and nozzle configuration to create a high-pressure spray of potable water. High-pressure spray is employed to remove solids from equipment.

Solvent – A liquid in which solid chemicals or other liquids are dissolved. The solvent of choice is pesticide-grade isopropanol. Use of other solvents (methanol, acetone, or hexane) may be required for particular projects or for a particular purpose (e.g., removal of concentrated waste) and must be justified in the project planning documents. For example, it may be necessary to use hexane when analyzing for trace levels of pesticides, PCBs, or fuels. In addition, because many of these solvents are not miscible in water, the equipment should be air dried prior to use. Solvents should not be used on PVC equipment or well construction materials.

Steam Pressure Washing - A cleaning method employing a high-pressure spray of heated potable water to remove various organic/inorganic chemicals from equipment.

4.0 RESPONSIBILITIES AND PERSONNEL QUALIFICATIONS

Project Manager - Responsible for ensuring that all field activities are conducted in accordance with approved project plan(s) requirements.

Decontamination Personnel - Individuals assigned the task of decontamination. It is the responsibility of these individuals to understand the use and application of the decontamination process and solutions as well as the monitoring of that process to ensure that it is working properly. This is accomplished through visual evaluation, monitoring instrument scanning of decontaminated items, and/or through the collection of rinsate blanks to verify contaminant removal.

Field Operations Leader (FOL) - Responsible for the implementation of project-specific planning documents. This includes on-site verification that all field activities are performed in compliance with approved SOPs or as otherwise dictated by the approved project plan(s). The FOL is also responsible for the completion and accuracy of all field documentation.

Site Safety Officer (SSO) - Exercises shared responsibility with the FOL concerning decontamination effectiveness. All equipment arriving on site (as part of the equipment inspection), leaving the site, and moving between locations is required to go through a decontamination evaluation. This is accomplished through visual examination and/or instrument screening to determine the effectiveness of the decontamination process. Improper or incomplete decontamination is sufficient to restrict equipment from entering the site, exiting the site, or moving to a new location on the site until the objectives are successfully completed.

General personnel qualifications for decontamination activities include the following:

- Occupational Safety and Health Administration (OSHA) 40-hour and applicable refresher training.
- Capability of performing field work under the expected physical and environmental (i.e., weather) conditions.
- Familiarity with appropriate decontamination procedures.

5.0 HEALTH AND SAFETY

In addition to the health and safety issues and reminders specified in subsections of this SOP, the following considerations and requirements must be observed as SOPs for field equipment decontamination activities:

- If any solvents or hazardous chemicals (e.g., isopropyl alcohol) are to be used in equipment decontamination activities, the FOL must first obtain the manufacturer's/supplier's Material Safety Data Sheet (MSDS) and assure that it is reviewed by all users (prior to its use), added to the site Hazardous Chemical Inventory, and maintained on site as part of the project Hazard Communication Program.
- Review and observe specific health and safety requirements (e.g., personal protective equipment [PPE]) specified in the project-specific health and safety plan for this activity.

6.0 EQUIPMENT LIST

- Wood for decontamination pad construction, when applicable (see Section 7.1).

- Tools for constructing decontamination pad frame, when applicable (see Section 7.1).
- Visqueen sheeting or comparable material to cover decontamination pad frame, when applicable (see Section 7.1).
- Wash/drying racks for auger flights and drill/drive rods, when applicable (see Section 7.2).
- PPE as specified in the project health and safety plan.
- Soap and water for washing and rinsing.
- Deionized water for final rinsing.
- Solvents (e.g., pesticide-grade isopropanol) for rinsing (see applicable portions of Section 7.2).
- Tubs, buckets, etc. for containerizing rinse water (see applicable portions of Section 7.2).
- Sample bottles for collecting rinsate blanks (see Section 7.2).
- Calibrated photoionization detector (PID) or flame ionization detector (FID) to monitor decontaminated equipment for organic vapors generated through the existence of residual contamination or the presence of decontamination solvent remaining after the piece was rinsed.
- Aluminum foil or clear clean plastic bag for covering cleaned equipment (see applicable portions of Section 7.2).
- Paper towels or cloths for wiping.
- Brushes, scrapers, or other hand tools useful for removing solid materials from equipment.
- Clear plastic wrap for covering or wrapping large decontaminated equipment items (see Section 7.2.2).
- Drum-moving equipment for moving filled waste drums (optional) (see Section 7.3).
- Drum labels for waste drums (see Attachment A).

7.0 PROCEDURES

The process of decontamination is accomplished through the removal of contaminants, neutralization of contaminants, or isolation of contaminants. To accomplish this activity, preparation is required including site preparation, equipment selection, and evaluation of the decontamination requirements and processes. Site contaminant types, concentrations, and media types are primary drivers in the selection of the types of decontamination and where it will be conducted. For purposes of this SOP, discussion is limited to decontamination procedures for general environmental investigations.

Decontamination processes will be performed at the location(s) specified in project-specific planning documents. Typical decontamination locations include the following:

- Temporary decontamination pads/facilities
- Sample locations
- Centralized decontamination pad/facilities

- Combination of some or all of the above

The following discussion includes general considerations for the decontamination process. Specific construction and implementation procedures will be as specified in the project-specific planning documents and/or may be as dictated by site-specific conditions as long as the intent of the requirements in the planning documents is met. This intent is to contain any residual fluids and solids generated through the decontamination process.

7.1 Decontamination Pad Design/Construction Considerations

7.1.1 Temporary Decontamination Pads

Temporary decontamination pads may be constructed at satellite locations within the site area in support of temporary work areas. These structures are generally constructed to support the decontamination of heavy equipment such as drill rigs and earth-moving equipment but can be employed for smaller articles.

The purpose of the decontamination pad is to contain wash waters and potentially contaminated soil generated during decontamination procedures. Therefore, construction of these pads should take into account the following considerations:

- Site location – The decontamination site selected should be far enough from the work site to maximize decontamination effectiveness while minimizing travel distance. The location of the decontamination site shall be selected to provide, in the judgment of the FOL or FOL designee, compliance with as many of the following characteristics as practicable:

  - Well removed from pedestrian/vehicle thoroughfares.

  - Avoidance of areas where control/custody cannot be maintained.

  - Avoidance of areas where potential releases of contaminated media or decontamination fluids may be compounded through access to storm water transport systems, streams, or other potentially sensitive areas.

  - Avoidance of potentially contaminated areas.

  - Avoidance of areas too close to the ongoing operation, where cross-contamination may occur.

  The selected decontamination site should include the following, where possible:

  - Areas where potable water and electricity are provided.

> ***Safety Reminder***
>
> When utilizing electrical power sources, either hard-wired or portable-generated sources, ensure that:
>
> - All power is routed through a Ground Fault Circuit Interrupter (GFCI).
>
> - All power cords are in good condition (no physical damage), rated for the intended energy load, and designated for outdoor use.
>
> In situations where accomplishing these elements is not possible, it will be necessary to implement a site electrical grounding program.

- Areas where support activities such as removing decontamination waters soil and sediment are possible without entering an active exclusion zone.

- Areas that offer sufficient size to carry out the specific decontamination sequence.

- Decontamination pad (decon pad) – The decon pad shall be constructed to meet the following characteristics:

  - Size – The size of the pad should be sufficient to accept the equipment to be decontaminated as well as permitting free movement around the equipment by the personnel conducting the decontamination. The size should permit these movements utilizing pressure/steam washer wands and hoses and minimizing splash due to work in close quarters.

  - Slope – An adequate slope will be constructed to permit the collection of water and potentially contaminated soil within a trough or sump constructed at one end. The collection point for wash waters should be of adequate distance that the decontamination workers do not have to walk through the wash waters while completing their tasks. Because the pad will be sloped, place a light coating of sand over the plastic to minimize potential slips and falls. See the text about liners below.

  - Sidewalls – The sidewalls shall be at least 6 inches in height (or as high as possible if 6 inches is not achievable) to provide adequate containment for wash waters and soil. If splash represents a potential problem, splash guards should be constructed to control overspray. Sidewalls may be constructed of wood, inflatables, sand bags, etc. to permit containment. Splash guards are typically wood frames with Visqueen coverings to control overspray.

  - Liner – Depending on the types of equipment and decontamination method to be used, the liner should be of sufficient thickness to provide a puncture-resistant barrier between the decontamination operation and the unprotected environment. Care should be taken to examine the surface area prior to placing the liner to remove sharp articles (sticks, stones, debris) that could puncture the liner. Liners are intended to form an impermeable barrier. The thickness may vary from a minimum recommended thickness of 10 mil to 30 mil. The desired thickness may be achieved through layering materials of lighter construction. It should be noted that various materials (rubber, polyethylene sheeting) become slippery when wet. To minimize this potential hazard associated with a sloped liner, a light coating of sand shall be applied to provide traction as necessary.

  - Wash/drying racks – Auger flights, drill/drive rods, and similar equipment require racks positioned off of the ground to permit these articles to be washed, drained, and dried while secured from falling during this process.

For decontamination of direct-push technology (DPT) equipment, the pad may be as simple as a mortar tub containing buckets of soapy water for washing and an empty bucket to capture rinse waters. Decontamination may be conducted at the rear of the rig to permit rapid tool exchange.

- Maintenance – Maintain the decontamination area by:

  - Periodically clearing the work area of standing water, soil, and debris, and coiling hoses to aid in eliminating slip, trip, and fall hazards. In addition, these articles will reduce potential backsplash and cross-contamination.

- Regularly changing the decontamination fluids to ensure proper cleaning and prevent cross-contamination.

- PPE – Periodically evaluate the condition of, and maintain the decontamination equipment, including regular cleaning of face shields and safety glasses. This is critical to ensuring the safety of decontamination personnel and the integrity of the decontamination process, and it will ensure that equipment is functioning properly.

7.1.2 Decontamination Activities at Drill Rigs/DPT Units

During subsurface sampling activities including drilling and DPT activities, decontamination of drive rods, Macro Core Samplers, split spoons, etc. is typically conducted at an area adjacent to the operation. Decontamination is generally accomplished using a soap/water wash and rinse utilizing buckets and brushes. This area requires sufficient preparation to accomplish the decontamination objectives.

Buckets shall be placed within mortar tubs or similar secondary containment tubs to prevent splash and spills from reaching unprotected environmental media. Drying racks shall be employed as directed for temporary pads to permit parts to dry and be evaluated prior to use/reuse. Methodology regarding this activity is provided in Section 7.2.

7.1.3 Decontamination Activities at Remote Sample Locations

When sampling at remote locations, sampling equipment such as trowels and pumps/tubing should be evacuated of potentially contaminated media to the extent possible. This equipment should be wrapped in plastic for transport to the temporary/centralized decontamination location for final cleaning and disposition. Flushing and cleaning of single-use equipment such as disposable trowels, tubing, and surgeon's gloves may allow disposal of this equipment after visible soil and water remnants have been removed.

7.2 Equipment Decontamination Procedures

The following represents procedures to be employed for the decontamination of equipment that may have contacted and/or accumulated contamination through site investigation activities.

7.2.1 Monitoring Well Sampling Equipment

7.2.1.1 Groundwater sampling equipment – This includes pumps inserted into monitoring wells such as bladder pumps, Whale pumps, and Redi-Flo pumps and reusable bailers, etc.

1. Evacuate to the extent possible, any purge water within the pump/bailer.

2. Scrub using soap and water and/or steam clean the outside of the pump/bailer and, if applicable, the pump tubing.

3. Insert the pump and tubing/bailer into a clean container of soapy water. Pump/run a sufficient amount of soapy water through the pump/bailer to flush out any residual well water. After the pump is flushed, circulate soapy water through the pump to ensure that the internal components are thoroughly flushed.

4. Remove the pump and tubing/bailer from the container

5. Rinse external pump components using tap water.

6. Insert the pump and tubing/bailer into a clean container of tap water. Pump/run a sufficient amount of tap water through the pump/bailer to evacuate all of the soapy water (until clear).

> ***CAUTION***
> Do not rinse PE, PVC, and associated tubing with solvents –
> Use the procedures defined in the project-specific planning documents. If they are not defined, contact the FOL for guidance. The solvent rinse described in Step 7 may be omitted if groundwater does not contain oil, grease, PAHs, PCBs, or other hard to remove organic materials.

7. If groundwater contains or is suspected to contain oil, grease, PAHs, PCBs, or other hard to remove organic materials, rinse the equipment to be cleaned with pesticide-grade isopropanol.

8. Pass deionized water through the hose to flush out the tap water and solvent residue as applicable.

9. Drain residual deionized water to the extent possible.

10. Allow components of the equipment to air dry.

11. For bladder pumps, disassemble the pump and wash the internal components with soap and water, then rinse with tap water, isopropanol, and deionized water and allow to dry. After the parts are dry, conduct a visual inspection and a monitoring instrument scan to ensure that potential contaminants and all decontamination solvent have been removed. Collect a rinsate blank in accordance with the project-specific planning documents to ensure that the decontamination process is functioning as intended. The typical frequency of collection for rinsate blanks is 1 per 20 field samples. In addition, wipe samples or field tests such as UV light may be used.

12. Wrap pump/bailer in aluminum foil or a clear clean plastic bag for storage.

> ***SAFETY REMINDER***
> Remember when handling powered equipment to disconnect the power source and render the equipment to a zero energy state (both potential and kinetic) before opening valves, disconnecting lines, etc.

7.2.1.2 Electronic Water Level Indicators/Sounders/Tapes

During water level measurements, rinsing the extracted tape and probe with deionized water and wiping the surface of the extracted tape between locations is acceptable. However, periodic full decontamination should be conducted as follows:

1. Wash with soap and water
2. Rinse with tap water
3. Rinse with deionized water

> ***NOTE***
> In situations where oil, grease, free product, other hard to remove materials are encountered, probes and exposed tapes should be washed in hot soapy water. If probes or tapes cannot be satisfactorily decontaminated (they are still stained, discolored, etc.), they should be removed from service.

7.2.1.3 Miscellaneous Equipment

Miscellaneous equipment including analytical equipment (water quality testing equipment) shall be cleaned per manufacturers' instructions. This generally includes wiping the sensor housing and rinsing with tap and deionized water.

Coolers/shipping containers employed to ship samples are received from the laboratory in a variety of conditions including marginal to extremely poor. Coolers shall be evaluated prior to use for the following:

- Structural integrity – Coolers missing handles or having breaks in the outer housing should be removed and not used. Notify the laboratory that the risk of shipping samples in the cooler(s) provided is too great and request a replacement unit.

- Cleanliness – As per protocol, only volatile organic samples are accompanied by a trip blank. If a cooler's cleanliness is in question (visibly dirty/stained) or if there are noticeable odors, the cooler should be decontaminated prior to use as follows:

  1. Wash with soap and water
  2. Rinse with tap water
  3. Dry

If these measures fail to clean the cooler to an acceptable level, remove the unit from use as a shipping container and ask the cooler provider (e.g., the analytical laboratory) to provide a replacement unit.

7.2.2 Downhole Drilling Equipment

This includes any portion of the drill rig that is over the borehole, including auger flights, drill stems, rods, and associated tooling that would extend over the borehole. The following procedure is to be employed prior to initiating the drilling/sampling activity, then between locations:

> ***CAUTION***
> Exercise care when using scrapers to remove soil and debris from downhole drilling equipment. Inadvertent slips of scrapers have resulted in cuts, scrapes, and injured knuckles, so use scrapers carefully when removing soil from these items.

1. Remove loose soil using shovels, scrapers, etc.

2. Through a combination of scrubbing using soap and water and/or steam cleaning or pressure washing, remove visible dirt/soil from the equipment being decontaminated.

> ***CAUTION***
> In Step 3, do not rinse PE, PVC, and associated tubing with solvents. The appropriate procedures should be defined within the project-specific planning documents. If they are not defined, contact the FOL for guidance. The solvent rinse described in Step 4 may be omitted if groundwater does not contain oil, grease, PAHs, PCBs, or other hard to remove organic materials.

3. Rinse the equipment with tap water, where applicable (steam cleaning and pressure washing incorporate rinsing as part of the process).

4. If the equipment has directly or indirectly contacted contaminated sample media and is known or suspected of being contaminated with oil, grease, PAHs, PCBs, or other hard to remove organic materials, rinse equipment with pesticide-grade isopropanol

5. To the extent possible, allow components to air dry.

6. If the decontaminated equipment is to be used immediately after decontamination, screen it with a calibrated photoionization detector (PID)/flame ionization detector (FID) to ensure that all contaminants and possible decontamination solvents (if they were used) have been adequately removed.

7. Wrap or cover equipment in clear plastic until it is time to be used.

SAFETY REMINDER

Even when equipment is disconnected from power sources, dangers such as the following may persist:

Falls - An auger flight standing on its end may fall and injure someone. Secure all loose articles to prevent heavy articles from falling onto people or equipment.

Burns - Steam cleaner water is heated to more than 212 ˚F and exhibits thermal energy that can cause burns. Prevent contact of skin with hot water or surfaces.

High water pressure - Pressure washer discharge can have 2,000 to 4,000 psi of water pressure. Water under this amount of pressure can rupture skin and other human tissues. Water at 4,000 psi exiting a 0˚ tip can be dangerous because of its relatively high cutting power. The exit velocity and cutting power of the water are reduced when exiting a 40˚ fan tip, but damage to soft tissues is still possible.

In general, follow the rules below to avoid injury, equipment damage, or incomplete decontamination:

1. Read the operating manual and follow the manufacturers' recommended safety practices before operating pressure washers and steam cleaners.

2. Never point the pressure washer or steam cleaner at another person or use to clean your boots or other parts of your body. Water lacerations and burns may appear to be minor at first but can be life threatening. Do not attempt to hold small parts in your hand while washing them with high-temperature or high-pressure water.

3. Always wear PPE as specified in the HASP such as:

   - Hard hat, safety glasses, splash shield, impermeable apron or splash suit, and hearing protection. Remember that excessive noise is a hazard when operating gas-powered engines and electrically driven pressure washers. PPE will be identified in your project specific planning documents.

4. Inspect each device before use. An inspection checklist will be provided in the project-specific planning documents. If it is a rented device, safety measures are typically provided by the vendor. In all cases, if you are not familiar with the operation of a pressure washer/steam cleaner, do not operate it until you obtain and thoroughly review operating instructions and recommended safety practices.

5. Do not modify equipment unless the manufacturer has approved the modifications.

7.2.3 Soil/Sediment Sampling Equipment

This section applies to soil sampling equipment including but not limited to hand augers, stainless steel trowels/spoons, bowls, dredges, scoops, split spoons, Macro Core samplers, etc.

1. Remove all loose soil from the equipment through manual means.

2. Through a combination of scrubbing using soap and water and/or steam cleaning or pressure washing, remove visible dirt/soil from the equipment.

3. Rinse the equipment with tap water.

> ***CAUTION***
> Do not rinse PE, PVC, and associated tubing with solvents. The appropriate procedures should be defined within the project-specific planning documents. If they are not defined, contact the FOL for guidance. The solvent rinse described in Step 4 may be omitted if groundwater does not contain oil, grease, PAHs, PCBs, or other hard to remove organic materials.

4. If the equipment is contaminated or suspected to be contaminated with oil, grease, PAHs, PCBs, or other hard to remove organic materials, rinse the equipment with pesticide-grade isopropanol.

5. Rinse the equipment with deionized water.

6. To the extent possible, allow components to air dry.

7. If the equipment is to be used immediately after decontamination, screen it with a calibrated PID/FID to ensure that all solvents (if they were used) and trace contaminants have been adequately removed.

8. After the equipment has dried, wrap it in aluminum foil for storage until use.

Dredges employed in sediment sampling are typically decontaminated as follows:

- Remove the sediment sample from the sampling device

- If sufficient associated surface water is available at the sampling site, place the dredge in the water and flush to remove visible sediment.

- Extract the dredge and wash it in soap and water per the project-specific planning documents.

> ***CAUTION***
> When handling dredges, the primary safety concern is trapping fingers or extremities in the larger dredge samplers within the jaws or pinch points of the mechanical jaws. Keep hands, fingers, and extremities away from these pinch and compression points. Either handle the device by the rope or preferably lock the jaws in place to control the potential for closing during maintenance and/or cleaning.

7.3 Contact Waste/Materials

During the course of field investigations, disposable/single-use equipment becomes contaminated. These items include tubing, trowels, PPE (gloves, overboots, splash suits, etc.), and broken sample containers.

With the exception of the broken glass, single-use articles should be cleaned (washed and rinsed) of visible materials and disposed as normal refuse. The exception to this rule is that extremely soiled materials that cannot be cleaned shall be containerized for disposal in accordance with applicable federal, state, and local regulations.

7.3.1 Investigation-Derived Wastes - Decontamination Wash Waters and Sediments

NOTE
Requirements for waste storage may differ from one facility to the next. Facility-specific directions for waste storage areas will be provided in project-specific documents, or separate direction will be provided by the Project Manager.

1. Assume that all investigation-derived waste (IDW) generated from decontamination activities contains the hazardous chemicals associated with the site unless there are analytical or other data to the contrary. Waste solution volumes could vary from a few gallons to several hundred gallons in cases where large equipment required cleaning.

2. Where possible, use filtering systems to extend the use of water within a closed system wash unit to recycle water and to reduce possible waste amounts.

NOTE
Containerized waste rinse solutions are best stored in 55-gallon drums (or equivalent containers) that can be sealed until ultimate disposal at an approved facility.

3. Label waste storage containers appropriately labeled (see Attachment A).

4. Ensure that the IDW storage area is configured to meet the following specifications to permit access to the containers and to conduct spill/leak monitoring, sampling, and extraction when the disposal route is determined:

   - Enclose areas accessible by the general public using construction fencing and signs.

   - Stored materials in 55-gallon drums on pallets with four (or fewer) drums per pallet.

   - Maintain the retaining bolt and label on the outside of storage containers where readily visible.

   - Provide at least 4 feet of room between each row of pallets to allow access to containers for sampling, drum removal, and spill response.

   - As directed in project-specific planning documents, maintain an IDW Inventory List and provide the list to the site Point of Contact at the termination of each shift.

   - Maintain spill response equipment at the IDW storage area in case it is required for immediate access.

- Where possible, use equipment for moving containers. Where not possible, obtain help to manipulate containers.

CAUTION

Each container of water can weigh up to 490 pounds. Each 55-gallon drum of wet soil can weigh more than 750 pounds. Fill drums and temporary containers to 80 percent capacity to minimize spill and handling difficulties. Use drum carts to move filled drums.

See safe lifting techniques provided in Section 4.4 of the Tetra Tech NUS, Inc. Health and Safety Guidance Manual.

When placing drums, keep your fingers out of pinch and smash points such as between the drums. In some cases such as well development and/or purge water, you can place the drums to be filled on the pallet and transport materials in smaller easier to handle containers.

7.4 Decontamination Evaluation

Upon decontamination of equipment, determine the effectiveness of the decontamination process in the following manner:

- Visual evaluation – A visual evaluation will be conducted to ensure the removal of particulate matter. This shall be done to ensure that the washing/rinsing process is working as intended.

- Instrument Screening – A properly calibrated PID/FID should be used to evaluate the presence of site contaminants and solvents used in the cleaning process. The air intake of the instrument shall be passed over the article to be evaluated. Avoid placing the instrument probe into residual waters. A PID/FID reading greater than the daily established background level requires a repeat of the decontamination process, followed by rescreening with the PID/FID. This sequence must be repeated until no instrument readings greater than the daily established background level are observed. It should be noted that the instrument scan is only viable if the contaminants are detectable within the instrument's capabilities.

NOTE

When required by project-specific planning documents, collection of rinsate blanks (see next step) shall be completed without exception unless approval to not collect these samples is obtained from the Project Manager.

- Collection of Rinsate Blanks – It is recommended that rinsate samples be collected to:

  - Evaluate the decontamination procedure representing different equipment applications (pumps versus drilling equipment) and different decontamination applications.

  - Single-use disposable equipment – The number of samples should represent different types of equipment as well as different lot numbers of single-use articles.

  - The collection and the frequency of collection of rinsate samples are as follows unless specified differently in the project-specific planning documents:

    - Per decontamination method
    - Per disposable article/batch number of disposable articles

NOTE

It is recommended that an initial rinsate sample be collected early in the project to ensure that the decontamination process is functioning properly and to avoid using a contaminated batch of single-use articles. It is recommended that a follow-up sample be collected later during the execution of the project to ensure that those conditions do not change.

Rinsate samples collection may be driven by types of and/or levels of contaminant. Difficult to remove contaminants, oils/greases, some PAHs/PCBs, etc. may also support the collection of additional rinsates due to the obvious challenges to the decontamination process. This is a field consideration to be determined by the FOL.

Attachment A
iDW Label

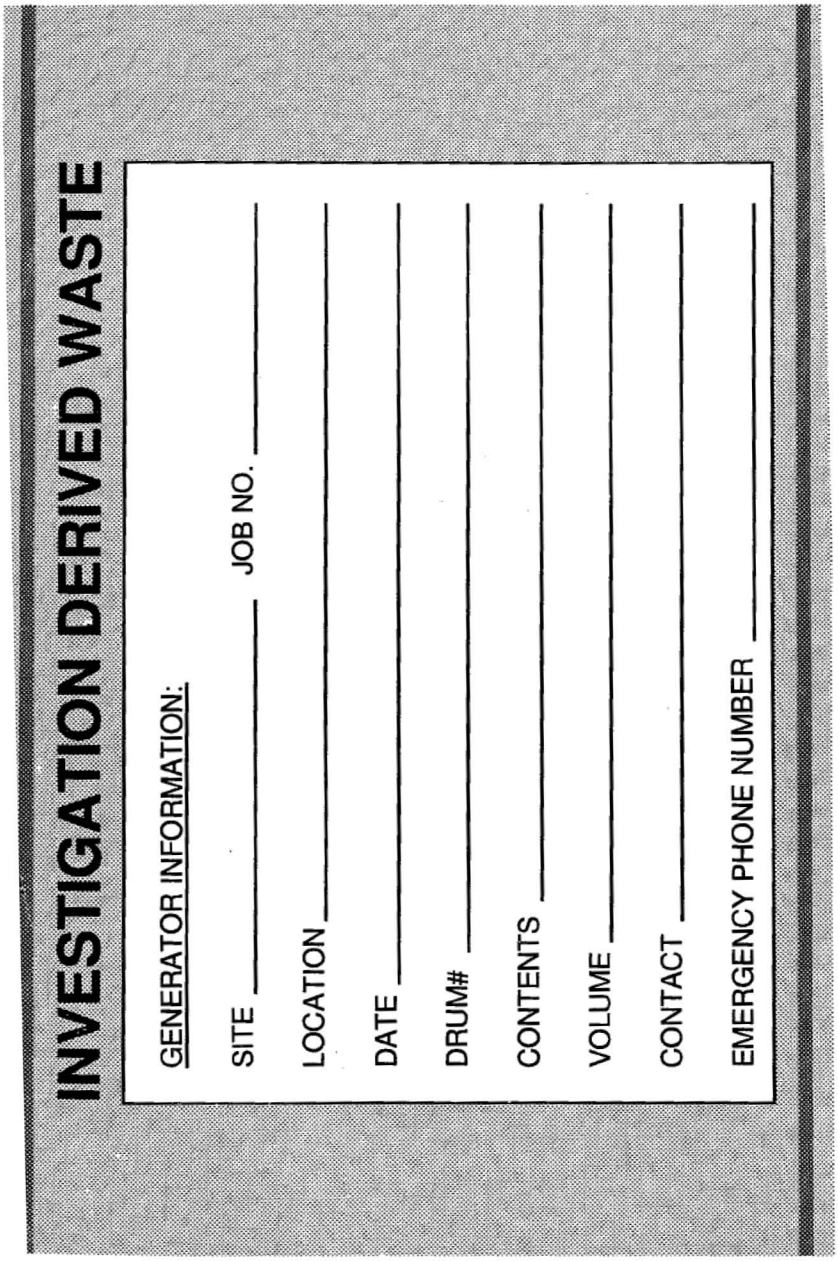

APPENDIX B

EPA FIELD SAMPLING GUIDE
METHOD 5035 A

Region III Fact Sheet:
Field Samplers Guide to the Collection and Handling of Soil Samples for Volatile Organic Analysis using SW 846 Method 5035A

Summary:

The purpose of this fact sheet is to specify procedures for the collection and handling by **field samplers** of soil samples for volatile organic analysis(VOA) in Region III. SW-846 Method 5035A is the collection method required for analysis of soil samples for VOA. This method incorporates chemical preservatives and sample storage techniques to limit volatilization and biodegradation of organic compounds. Method 5035A is applicable to both low/medium and high level soil samples.

Collection Procedures:

- Soil samples being analyzed for volatile organic compounds collected via Method 5035A should not be chemically preserved in the field.
- Samples should be collected using the following collection options:

Option 1: For most Soil types

Number of samples: 4 EnCore (or similiar closed-sampling vessel)[1] samples
4 QC EnCore samplers
1 40-mL vial for moisture analysis

[1]EnCore samplers (or similar sample collection device, refer to Section 4.5 of Method 5035)

Samples must be cooled to 4° C upon collection and during shipment and bagged individually upon collection.
Samples must be arrive at the laboratory within 24 hours.
Samples must be analyzed or preserved by the lab within 48 hours of collection.

Option 2: For Non-Cohesive Granular Material (wet, rocky, sediments, etc.)

Number of samples: 4 40mL vials (sampler may use wide mouth jars if sample not amiable to smaller vials)
2 QC 40 mL vials
1 40 mL vial for moisture analysis

Samples must be cooled to 4°C upon collection and during shipment.
Samples must be arrive at the laboratory within 24 hours.
Samples must be analyzed or preserved by the lab within 48 hours of collection.

METHOD 5035A

CLOSED-SYSTEM PURGE-AND-TRAP AND EXTRACTION FOR VOLATILE ORGANICS IN SOIL AND WASTE SAMPLES

1.0 SCOPE AND APPLICATION

1.1 This method describes a closed-system purge-and-trap process for the analysis of volatile organic compounds (VOCs) in solid materials (e.g., soils, sediments, and solid waste). While the method is designed for use on samples containing low levels of VOCs, procedures are also provided for collecting and preparing solid samples containing high concentrations of VOCs and for oily wastes. For these high concentration and oily materials, sample collection and preparation are performed using the procedures described here, and sample introduction is performed using the aqueous purge-and-trap procedure in Method 5030. These procedures may be used in conjunction with any appropriate determinative gas chromatographic procedure, including, but not limited to, Methods 8015, 8021, and 8260. The following compounds are appropriate for this sample preparation technique:

Compound	CAS No.[a]	Response	Stability
Acetone	67-64-1	ht	hs
Acetonitrile	75-05-8	pp	nd
Acrolein (Propenal)	107-02-8	pp	ms
Acrylonitrile	107-13-1	pp	hs
Allyl alcohol	107-18-6	ht	nd
Allyl chloride	107-05-1	c	ms
t-Amyl ethyl ether (TAEE)	919-94-8	c / ht	nd
t-Amyl methyl ether (TAME)	994-05-8	c / ht	hs
Benzene	71-43-2	c	hs
Benzyl chloride	100-44-7	c	nd
Bis(2-chloroethyl)sulfide	505-60-2	pp	nd
Bromoacetone	598-31-2	pp	nd
Bromochloromethane	74-97-5	c	hs
Bromodichloromethane	75-27-4	c	ms
Bromoform	75-25-2	c	hs
Bromomethane	74-83-9	c	hvs
n-Butanol	71-36-3	ht	nd
2-Butanone (MEK)	78-93-3	pp	hvs
t-Butyl alcohol	75-65-0	ht	nd
Carbon disulfide	75-15-0	pp	hvs
Carbon tetrachloride	56-23-5	c	hvs
Chloral hydrate	302-17-0	pp	nd
Chlorobenzene	108-90-7	c	hvs
Chlorodibromomethane	124-48-1	c	nd
Chloroethane	75-00-3	c	ms

(continued)

Compound	CAS No.[a]	Response	Stability
2-Chloroethanol	107-07-3	pp	nd
2-Chloroethyl vinyl ether	110-75-8	c	ls
Chloroform	67-66-3	c	hs
Chloromethane	74-87-3	c	hvs
Chloroprene	126-99-8	c	nd
Crotonaldehyde	4170-30-3	pp	nd
1,2-Dibromo-3-chloropropane	96-12-8	pp	ms
1,2-Dibromoethane	106-93-4	c	hs
Dibromomethane	74-95-3	c	hs
1,2-Dichlorobenzene	95-50-1	c	hs
1,3-Dichlorobenzene	541-73-1	c	ms
1,4-Dichlorobenzene	106-46-7	c	ms
cis-1,4-Dichloro-2-butene	1476-11-5	c	nd
trans-1,4-Dichloro-2-butene	110-57-6	pp	ls
Dichlorodifluoromethane	75-71-8	c	hs
1,1-Dichloroethane	75-34-3	c	hs
1,2-Dichloroethane	107-06-2	c	hs
1,1-Dichloroethene	75-35-4	c	hvs
cis-1,2-Dichloroethene	156-59-4	c	hs
trans-1,2-Dichloroethene	156-60-5	c	ms
1,2-Dichloropropane	78-87-5	c	hs
1,3-Dichloro-2-propanol	96-23-1	pp	nd
cis-1,3-Dichloropropene	10061-01-5	c	ls
trans-1,3-Dichloropropene	10061-02-6	c	ls
1,2,3,4-Diepoxybutane	1464-53-5	c	nd
Diethyl ether	60-29-7	c	nd
Diisopropyl ether (DIPE)	108-20-3	c / ht	hs
1,4-Dioxane	123-91-1	pp	nd
Ethylbenzene	100-41-4	c	hvs
Ethylene oxide	75-21-8	pp	nd
Ethyl methacrylate	97-63-2	c	ms
Ethyl *tert*-butyl ether (ETBE)	637-92-3	c / ht	hs
Hexachlorobutadiene	87-68-3	c	ms
2-Hexanone	591-78-6	pp	hvs
Iodomethane	74-88-4	c	nd
Isobutyl alcohol	78-83-1	ht / pp	nd
Isopropylbenzene	98-82-8	c	ms
Malononitrile	109-77-3	pp	nd
Methacrylonitrile	126-98-7	pp	hs
Methylene chloride	75-09-2	c	hs
Methyl methacrylate	80-62-6	c	ms
4-Methyl-2-pentanone (MIBK)	108-10-1	pp	ms
Methyl *tert*-butyl ether (MTBE)	1634-04-4	c / ht	hs
Naphthalene	91-20-3	c	ms
Nitrobenzene	98-95-3	c	nd

(continued)

Compound	CAS No.[a]	Response	Stability
2-Nitropropane	79-46-9	c	nd
N-Nitroso-di-*n*-butylamine	924-16-3	pp	nd
Paraldehyde	123-63-7	pp	nd
2-Pentanone	107-87-9	pp	nd
2-Picoline	109-06-8	pp	nd
1-Propanol	71-23-8	ht / pp	nd
2-Propanol	67-63-0	ht / pp	nd
â-Propiolactone	57-57-8	pp	nd
Propionitrile (ethyl cyanide)	107-12-0	ht	nd
n-Propylamine	107-10-8	c	nd
Styrene	100-42-5	c	hvs
1,1,1,2-Tetrachloroethane	630-20-6	c	hs
1,1,2,2-Tetrachloroethane	79-34-5	c	nd
Tetrachloroethene	127-18-4	c	ms
Toluene	108-88-3	c	hs
o-Toluidine	95-53-4	pp	nd
1,2,4-Trichlorobenzene	120-82-1	c	hs
1,1,1-Trichloroethane	71-55-6	c	ms
1,1,2-Trichloroethane	79-00-5	c	hs
Trichloroethene	79-01-6	c	ms
Trichlorofluoromethane	75-69-4	c	ls
1,2,3-Trichloropropane	96-18-4	c	ls
Vinyl acetate	108-05-4	c	ls
Vinyl chloride	75-01-4	c	hvs
o-Xylene	95-47-6	c	hvs
m-Xylene	108-38-3	c	hvs
p-Xylene	106-42-3	c	hvs

[a] Chemical Abstract Service Registry Number

c = Adequate response by this technique
ht = Method analyte only when purged at 80°C
pp = Poor purging efficiency resulting in high Estimated Quantitation Limits
nd = Not determined
hs = High stability in preserved water samples (> 60 days). Longer holding times may be appropriate, see Appendix A, Table A.1 footnote and ref. 47 for additional information
ms = Medium stability in preserved water samples (15 - 60 days). Longer holding times may be appropriate, see Appendix A, Table A.1 footnote and ref. 47 for additional information
ls = Low stability in preserved water samples (< 14 days), analyses should be performed as soon as possible.
hvs = Highly variable stability in preserved water samples. Longer holding times may be appropriate, see Appendix A, Table A.1 footnote and ref. 47 for additional information.

1.2 The low soil method utilizes a hermetically-sealed sample vial, the seal of which is never broken from the time of sampling to the time of analysis. Since the sample is never exposed to the atmosphere after sampling, the losses of VOCs during sample transport, handling, and analysis are minimized. The applicable concentration range of the low soil method is dependent on the determinative method, matrix, and compound. However, it will generally fall in the 0.5 to 200 µg/kg range.

1.3 Procedures are included for preparing high concentration samples for purging by Method 5030. High concentration samples are those containing VOC levels of >200 µg/kg.

1.4 Procedures are also included for addressing oily wastes that are soluble in a water-miscible solvent. These samples are also purged using Method 5030.

1.5 This method can be used for most volatile organic compounds that have boiling points below 200°C and that are insoluble or slightly soluble in water. Volatile, water-soluble compounds can be included in this analytical technique. However, quantitation limits (by GC or GC/MS) are significantly higher because of poor purging efficiency. The purging efficiency can be improved for water soluble analytes, e.g. ketones and alcohols, when purging at an elevated temperature of 80°C as compared to 20° or 40°C.

1.6 This method, in conjunction with Method 8015 (GC/FID), may be used for the analysis of the aliphatic hydrocarbon fraction in the light ends of total petroleum hydrocarbons, e.g., gasoline. For the aromatic fraction (BTEX), use this method and Method 8021 (GC/PID). A total determinative analysis of gasoline fractions may be obtained using Method 8021 in series with Method 8015.

1.7 As with any preparative method for volatiles, samples should be screened to avoid contamination of the purge-and-trap system by samples that contain very high concentrations of purgeable material above the calibration range of the low concentration method. In addition, because the sealed sample container cannot be opened to remove a sample aliquot without compromising the integrity of the sample, multiple sample aliquots should be collected to allow for screening and reanalysis.

1.8 The closed-system purge-and-trap equipment employed for low concentration samples is not appropriate for soil samples preserved in the field with methanol. Such samples should be analyzed using Method 5030 (see the note in Sec. 8.2.2).

1.9 Analysts should consult the disclaimer statement at the front of the manual and the information in Chapter Two for guidance on the intended flexibility in the choice of methods, apparatus, materials, reagents, and supplies, and on the responsibilities of the analyst for demonstrating that the techniques employed are appropriate for the analytes of interest, in the matrix of interest, and at the levels of concern.

In addition, analysts and data users are advised that, except where explicitly specified in a regulation, the use of SW-846 methods is *not* mandatory in response to Federal testing requirements. The information contained in this method is provided by EPA as guidance to be used by the analyst and the regulated community in making judgments necessary to generate results that meet the data quality objectives for the intended application.

1.10 Use of this method is restricted to use by, or under supervision of, appropriately experienced and trained laboratory analysts. Each analyst must demonstrate the ability to generate acceptable results with this method.

2.0 SUMMARY OF METHOD

2.1 Low concentration soil method - generally applicable to soils and other solid samples with VOC concentrations in the range of 0.5 to 200 µg/kg (refer to Appendix A for additional information).

Volatile organic compounds (VOCs) are determined by collecting an approximately 5-g sample and shipping to the laboratory or appropriate analysis site by the various methods outlined in Appendix A. To ensure minimal loss of volatile constituents prior to analysis the entire sample vial is placed, unopened with an unpierced septum, into the instrument auto sampler device. Immediately before analysis, organic-free reagent water, surrogates, and internal standards (if applicable) are automatically added without opening the sample vial. The vial containing the sample is heated to 40°C and the volatiles purged into an appropriate trap using an inert gas combined with agitation of the sample. Purged components travel via a transfer line to a trap. When purging is complete, the trap is heated and backflushed with helium to desorb the trapped sample components into a gas chromatograph for analysis by an appropriate determinative method.

2.2 High concentration method - generally applicable to soils and other solid samples with VOC concentrations greater than 200 µg/kg (refer to Appendix A for additional information).

The sample introduction technique in Sec. 2.1 is not applicable to all samples, particularly those containing high concentrations (generally greater than 200 µg/kg) of VOCs which may overload either the volatile trapping material or exceed the working range of the determinative instrument system (e.g., GC/MS, GC/FID, GC/ELCD, etc.). In such instances, this method describes two sample collection options and the corresponding sample purging procedures.

2.2.1 The first option is to collect an appropriate sample volume in a pre-weighed vial with a septum-sealed screw-cap (see Sec 6) that contains a water-miscible organic solvent (e.g., methanol). At the time of analysis, an aliquot of the solvent is removed from the vial and diluted into water along with the internal standards and surrogates, then purged using Method 5030 and analyzed by an appropriate determinative method.

2.2.2 The second option is to collect a bulk sample in a VOA vial without the use of a chemical preservative. A portion of that sample is removed from the container in the laboratory and is dispersed in a water-miscible solvent to dissolve the volatile organic constituents. An aliquot of the solution is added to reagent water in a purge tube. Surrogates and internal standards (if applicable) are added to the solution, then purged using Method 5030, and analyzed by an appropriate determinative method. Because the procedure involves opening the vial and removing a portion of the soil, a significant amount of volatile constituents may be lost during handling. (See Appendix A, Sec. 5.1 for additional details)

<u>NOTE</u>: Surrogate compounds may either be spiked into the solvent at the time of extraction or the reagent water containing an aliquot of the extract prior to analysis. Since the surrogate recovery data from these two options provides assurances of either extraction or analytical efficiencies, the decision as to when the surrogates are added depends on what questions need to be answered for a given sample matrix and the intended uses of the data.

2.3 High concentration oily waste method - generally applicable to oily samples with VOC concentrations greater than 200 µg/kg that can be diluted in a water-miscible solvent.

Samples that are comprised of oils or samples that contain significant amounts of oil present additional analytical challenges. This procedure is generally appropriate for such samples when they are soluble in a water-miscible solvent.

2.3.1 After demonstrating that a test aliquot of the sample is soluble in methanol or polyethylene glycol (PEG), a separate aliquot of the sample is spiked with surrogates and diluted in the appropriate solvent. An aliquot of the solution is added to 5 mL of reagent water in a purge tube, taking care to ensure that a floating layer of oil is not present in the purge tube. Internal standards (if applicable) are added to the solution which is then purged using Method 5030 and analyzed by an appropriate determinative method.

NOTE: Surrogate compounds may either be spiked into the solvent at the time of extraction or the reagent water containing an aliquot of the extract prior to analysis. Since the surrogate recovery data from these two options provides assurances of either extraction or analytical efficiencies, the decision as to when the surrogates are added depends on what questions need to be answered for a given sample matrix and the intended uses of the data.

2.3.2 Samples that contain oily materials that are not soluble in water-miscible solvents must be prepared according to Method 3585.

3.0 DEFINITIONS

Refer to Chapter One for a listing of applicable quality assurance/quality control (QA/QC) definitions.

4.0 INTERFERENCES

4.1 Impurities in the purge gas and from organic compounds out-gassing from the plumbing ahead of the trap account for the majority of contamination problems. The analytical system must be demonstrated to be free from contamination under the conditions of the analysis by running method blanks. The use of non-polytetrafluoroethylene (non-PTFE) plastic coating, non-PTFE thread sealants, or flow controllers with rubber components in the purging device must be avoided, since such materials out-gas organic compounds which can be concentrated in the trap during the purge operation. These compounds can result in interferences or false positives in the determinative step.

4.2 Samples can be contaminated by diffusion of volatile organics (particularly methylene chloride and fluorocarbons) through the septum seal of the sample vial during shipment and storage. A trip blank prepared from an appropriate organic-free matrix and sample container, and carried through sampling and handling protocols, serves as a check on such contamination.

4.3 Contamination by carryover can occur whenever high-concentration and low-concentration samples are analyzed in sequence. Where practical, samples with unusually high concentrations of analytes should be followed by an analysis of organic-free reagent water to check for cross-contamination. If the target compounds present in an unusually concentrated sample are also found to be present in the subsequent samples, the analyst must demonstrate that the compounds are not due to carryover. Conversely, if those target compounds are not present in the subsequent sample, then the analysis of organic-free reagent water is not necessary.

4.4 The laboratory where volatile analysis is performed should be completely free of solvents. Special precautions must be taken when analyzing for methylene chloride. The analytical and sample storage area should be isolated from all atmospheric sources of methylene chloride, otherwise random background levels will result. Since methylene chloride will permeate through PTFE tubing, all GC carrier gas lines and purge gas plumbing should be constructed of stainless steel or copper tubing. Laboratory workers' clothing previously exposed to methylene chloride fumes during common liquid/liquid extraction procedures can contribute to sample contamination. The presence of other organic solvents in the laboratory where volatile organics are analyzed can also lead to random background levels and the same precautions must be taken.

5.0 SAFETY

This method does not address all safety issues associated with its use. The laboratory is responsible for maintaining a safe work environment and a current awareness file of OSHA regulations regarding the safe handling of the chemicals included in this method. A reference file of material safety data sheets (MSDSs) should be available to all personnel involved in these analyses.

6.0 EQUIPMENT AND SUPPLIES

6.1 Sample containers

The specific sample containers required will depend on the purge-and-trap system to be employed (see Sec. 6.2). Several systems are commercially available. Some systems employ 40-mL clear vials with a special frit and equipped with two PTFE-faced silicone septa. Other systems permit the use of any good quality glass vial that is large enough to contain at least 5 g of soil or solid material and at least 10 mL of water and that can be sealed with a screw-cap containing a PTFE-faced silicone septum. Consult the purge-and-trap system manufacturer's instructions regarding the suitable specific vials, septa, caps, and mechanical agitation devices. Additional information on sample containers can be found in Appendix A, Secs. 1.6, 3.0, 7.0 and 8.0.

6.2 Purge-and-trap system

The purge-and-trap system consists of a unit that automatically adds water, surrogates, and internal standards (if applicable) to a vial containing the sample, purges the VOCs using an inert gas stream while agitating the contents of the vial, and also traps the released VOCs for subsequent desorption into the gas chromatograph. Such systems are commercially available from several sources and shall meet the following specifications.

6.2.1 The purging device should be capable of accepting a vial sufficiently large enough to contain a 5-g soil sample plus a magnetic stirring bar and 10 mL of water. The device must be capable of heating a soil vial to 40°C and holding it at that temperature while the inert purge gas is allowed to pass through the sample. The device should also be capable of introducing at least 5 mL of organic-free reagent water into the sample vial while trapping the displaced headspace vapors. It must also be capable of agitating the sealed sample during purging, (e.g., using a magnetic stirring bar added to the vial prior to sample collection, sonication, or other means). The analytes being purged must be quantitatively transferred to an absorber trap. The trap must be capable of transferring the absorbed VOCs to the gas chromatograph (see 6.2.2).

NOTE: The equipment used to develop this method was a Dynatech PTA-30 W/S Autosampler. This device was subsequently sold to Varian, and is now available as the Archon Purge and Trap Autosampler. See the Disclaimer at the front of this manual for guidance on the use of alternative equipment.

6.2.2 A variety of traps and trapping materials may be employed with this method. The choice of trapping material may depend on the analytes of interest. Whichever trap is employed, it must demonstrate sufficient adsorption and desorption characteristics to meet the quantitation limits of all desired target analytes for a given project and the QC requirements in Method 8000 and the determinative method. The most difficult analytes are generally the gases, especially dichlorodifluoromethane. The trap must be capable of desorbing the late eluting target analytes.

NOTE: Check the responses of the brominated compounds when using alternative charcoal traps (especially Vocarb 4000, Supelco, Inc., Bellefonte, PA), as some degradation has been noted when higher desorption temperatures (especially above 240 - 250°C) are employed. 2-Chloroethyl vinyl ether is degraded on Vocarb 4000 but performs adequately when Vocarb 3000 (Supelco, Inc., Bellefonte, PA) is used. The primary criterion, as stated above, is that all target analytes meet the sensitivity requirements for a given project.

6.2.2.1 The trap used to develop this method was 25 cm long, with an inside diameter of 0.105 inches, and was packed with Carbopack/Carbosieve (Supelco, Inc., Bellefonte, PA).

6.2.2.2 The standard trap used in other EPA purge-and-trap methods is also acceptable. That trap is 25 cm long and has an inside diameter of at least 0.105 in. Starting from the inlet, the trap contains the equal amounts of the adsorbents listed below. It is recommended that 1.0 cm of methyl silicone-coated packing (35/60 mesh, Davison, grade 15 or equivalent) be inserted at the inlet to extend the life of the trap. If the analysis of dichlorodifluoromethane or other fluorocarbons of similar volatility is not required, then the charcoal can be eliminated and the polymer increased to fill 2/3 of the trap. If only compounds boiling above 35°C are to be analyzed, both the silica gel and charcoal can be eliminated and the polymer increased to fill the entire trap.

6.2.2.2.1 2,6-Diphenylene oxide polymer - 60/80 mesh, chromatographic grade (Tenax GC or equivalent).

6.2.2.2.2 Methyl silicone packing - OV-1 (3%) on Chromosorb-W, 60/80 mesh or equivalent.

6.2.2.2.3 Coconut charcoal - Prepare from Barnebey Cheney, CA-580-26, or equivalent, by crushing through 26 mesh screen.

6.2.2.3 Trapping materials other than those listed above also may be employed, provided that they meet the specifications as noted above.

6.2.3 The desorber for the trap must be capable of rapidly heating the trap to the temperature recommended by the trap material manufacturer, prior to the beginning of the flow of desorption gas. Several commercial desorbers (purge-and-trap units) are available.

6.3 Syringe and syringe valves

6.3.1 25-mL glass hypodermic syringes with Luer-Lok (or equivalent) tip (other sizes are acceptable depending on sample volume used).

6.3.2 2-way syringe valves with Luer ends.

6.3.3 25-µL micro syringe with a 2-inch x 0.006-inch ID, 22° bevel needle (Hamilton #702N or equivalent).

6.3.4 Micro syringes - 10-, 100-µL.

6.3.5 Syringes - 0.5-, 1.0-, and 5-mL, gas-tight with shut-off valve.

6.4 Miscellaneous

6.4.1 Glass vials

6.4.1.1 60-mL, septum-sealed, to collect samples for screening, moisture determination.

6.4.1.2 40-mL, screw-cap, PTFE lined, septum-sealed. Examine each vial prior to use to ensure that the vial has a flat, uniform sealing surface.

6.4.2 Top-loading balance - Capable of accurately weighing to 0.01 g.

6.4.3 Glass scintillation vials - 20-mL, with screw-caps and PTFE liners, or glass culture tubes with screw-caps and PTFE liners, for dilution of oily waste samples.

6.4.4 Volumetric flasks - Class A, 10-mL and 100-mL, with ground-glass stoppers.

6.4.5 2-mL glass vials, for GC autosampler - Used for oily waste samples extracted with methanol or PEG.

6.4.6 Spatula, stainless steel - narrow enough to fit into a sample vial.

6.4.7 Disposable Pasteur pipettes.

6.4.8 Magnetic stirring bars - PTFE- or glass-coated, of the appropriate size to fit the sample vials. Consult manufacturer's recommendation for specific stirring bars. Stirring bars may be reused, provided that they are thoroughly cleaned between uses. Consult the manufacturers of the purging device and the stirring bars for suggested cleaning procedures.

6.5 Field sampling equipment

6.5.1 Purge-and-trap soil sampler - Model 3780PT (Associated Design and Manufacturing Company, Alexandria, VA), or equivalent.

6.5.2 EnCore™ sampler - (En Novative Technologies, Inc., Green Bay, WI), or equivalent.

6.5.3 Terra Core™ sampler - (En Novative Technologies, Inc., Green Bay, WI), or equivalent.

6.5.4 EasyDraw™ syringe and PowerStop™ handle - (US Oil Company, Inc., Kimberly, WI), or equivalent.

6.5.5 Alternatively, disposable plastic syringes with a barrel smaller than the neck of the soil vial may be used to collect the sample. The syringe end of the barrel is cut off prior to sampling. One syringe is needed for each sample aliquot to be collected.

6.5.4 Portable balance - For field use, capable of weighing to 0.01 g.

6.5.5 Balance weights - Balances employed in the field should be checked against an appropriate reference weight at least once daily, prior to weighing any samples, or as described in the sampling plan. The specific weights used will depend on the total weight of the sample container, sample, stirring bar, reagent water added, cap, and septum.

6.5.6 Additional types of field sampling equipment and accessories are described in Appendix A, Secs. 1.6 and 7.0.

7.0 REAGENTS AND STANDARDS

7.1 Organic-free reagent water - All references to water in this method refer to organic-free reagent water, as defined in Chapter One.

7.2 Methanol, CH_3OH - purge-and-trap quality or equivalent. Store away from other solvents.

7.3 Polyethylene glycol (PEG), $H(OCH_2CH_2)_nOH$ - free of interferences at the detection limit of the target analytes.

7.4 Low concentration sample preservative

7.4.1 For determination as to whether sample preservation is necessary and for selection of appropriate preservation options, see Appendix A, Secs. 1.2, 1.3, 3.0 and 8.0.

7.4.2 Sodium bisulfate, $NaHSO_4$ - ACS reagent grade or equivalent.

7.4.3 The preservative, if necessary, should be added to the vial prior to shipment to the field, and must be present in the vial prior to adding the sample.

7.5 See the determinative method and Method 5000 for guidance on internal standards and surrogates to be employed in this procedure. The recommended surrogates are 4-bromofluorobenzene, 1,2-dichloroethane-d_4, and toluene-d_8. Other compounds may be used as surrogates, depending upon the analysis requirements and the specific target analytes. The recommended internal standards are chlorobenzene-d_5, 1,4-dichlorobenzene-d_4, and fluorobenzene. Other compounds may be used as internal standards as long as they have retention times similar to the target analytes being detected.

8.0 SAMPLE COLLECTION, PRESERVATION, AND STORAGE

Refer to the introductory material in this chapter, Organic Analytes, Sec. 4.1, and Appendix A for general sample collection information. The low concentration portion of this method employs sample vials that are filled and weighed in the field and never opened during the analytical process.

As a result, sampling personnel should be equipped with a portable balance capable of weighing to 0.01 g.

8.1 Preparation of sample vials

The specific preparation procedures for sample vials depend on the expected concentration range of the sample, with separate preparation procedures for low concentration soil samples and high concentration soil and solid waste samples. Sample vials should be prepared in a fixed laboratory or other controlled environment, sealed, and shipped to the field location. Gloves should be worn during the preparation steps. More detailed information on additional options for the preparation of sample vials can be found in Appendix A, Secs. 3.0, 7.0, and 8.0.

8.1.1 Low concentration soil samples

The following steps apply to the preparation of vials used in the collection of low concentration soil samples to be analyzed by the closed-system purge-and-trap equipment described in this method.

8.1.1.1 Add a clean magnetic stirring bar to each clean vial. If the purge-and-trap device (Sec. 6.2) employs a means of stirring the sample other than a magnetic stirrer (e.g., sonication or other mechanical means), then the stir bar is omitted.

8.1.1.2 Add preservative, if necessary, (See Appendix A, Secs. 1.2, 1.3, 3.0 and 8.0) to each vial. The preservative is added to each vial prior to shipping the vial to the field. Add approximately 1 g of sodium bisulfate to each vial. If samples markedly smaller or larger than 5 g are to be collected, adjust the amount of preservative added to correspond to approximately 0.2 g of preservative for each 1 g of sample. Enough sodium bisulfate should be present to ensure a sample pH of ≤ 2.

8.1.1.3 Add 5 mL of organic-free reagent water to each vial. The water and the preservative will form an acid solution that will reduce or eliminate the majority of the biological activity in the sample, thereby preventing biodegradation of the volatile target analytes.

8.1.1.4 Seal the vial with the screw-cap and septum seal. If the double-ended, fritted, vials are used, seal both ends as recommended by the manufacturer.

8.1.1.5 Affix a label to each vial. This eliminates the need to label the vials in the field and assures that the tare weight of the vial includes the label. (The weight of any markings added to the label in the field is negligible).

8.1.1.6 Weigh the prepared vial to the nearest 0.01 g, record the tare weight, and write it on the label.

8.1.1.7 Because volatile organics will partition into the headspace of the vial from the aqueous solution and will be lost when the vial is opened, surrogates, matrix spikes, and internal standards (if applicable) should only be added to the vials after the sample has been added to the vial. These standards should be introduced back in the laboratory, either manually by puncturing the septum with a small-gauge needle or automatically by the sample introduction system, just prior to analysis.

8.1.2 High concentration soil samples collected without a preservative

When high concentration samples are collected without a preservative, a variety of sample containers may be employed, including 60-mL glass vials with septum seals (see Sec. 6.4). More detailed information on additional options for the preparation of sample vials can be found in Appendix A, Secs. 3.0, 7.0, and 8.0.

8.1.3 High concentration soil samples collected and preserved in the field

The following steps apply to the preparation of vials used in the collection of high concentration soil samples to be preserved in the field with methanol and analyzed by the aqueous purge-and-trap equipment described in Method 5030. See the water-miscible solvent dilution effect information in Sec. 11.5 and Method 8000 for guidance on correcting results for data reporting purposes. More detailed information on additional options for the preparation of sample vials can be found in Appendix A, Secs. 3.0, 7.0, and 8.0.

8.1.3.1 Add 10 mL of methanol to each vial.

8.1.3.2 Seal the vial with the screw-cap and septum seal.

8.1.3.3 Affix a label to each vial. This eliminates the need to label the vials in the field and assures that the tare weight of the vial includes the label. (The weight of any markings added to the label in the field is negligible).

8.1.3.4 Weigh the prepared vial to the nearest 0.01 g, record the tare weight, and write it on the label.

NOTE: Vials containing methanol should be weighed a second time on the day that they are to be used. Vials found to have lost methanol (reduction in weight of >0.01 g) should not be used for sample collection.

8.1.3.5 Surrogates, internal standards and matrix spikes (if applicable) should be added to the sample after it is returned to the laboratory and prior to analysis.

8.1.4 Oily waste samples

When oily waste samples are known to be soluble in methanol or PEG, sample vials may be prepared as described in Sec. 8.1.3, using the appropriate solvent. However, when the solubility of the waste is unknown, the sample should be collected without the use of a preservative, in a vial such as that described in Sec. 8.1.2.

8.2 Sample collection

Collect the sample according to the procedures outlined in the sampling plan. As with any sampling procedure for volatiles, care must be taken to minimize the disturbance of the sample in order to minimize the loss of the volatile components. Several techniques may be used to transfer a sample to the relatively narrow opening of the low concentration soil vial. These include devices such as the EnCore™ sampler, the Purge-and-Trap Soil Sampler ™, or any other sampling device listed in Sec. 6.5, or equivalent. Always wear gloves whenever handling the tared sample vials. More detailed information and additional sample collection options can be found in Appendix A, Sec. 7.0.

8.2.1 Low concentration soil samples

8.2.1.1 Volatile organic compounds (VOCs) are determined by collecting an approximately 5-g sample and shipping to the laboratory or appropriate analysis site by the various methods outlined in Appendix A. Using an appropriate sample collection device, collect approximately 5 g of sample as soon as possible after the surface of the soil or other solid material has been exposed to the atmosphere: generally within a few minutes at most. Carefully wipe the exterior of the sample collection device with a clean cloth or towel.

8.2.1.2 Using the sample collection device, add about 5 g (2 - 3 cm) of soil to the sample vial containing the preservative solution or other preservation options as discussed in Appendix A. Quickly brush any soil off the vial threads and immediately seal the vial with the septum and screw-cap. Store samples on ice at 4°C. Alternatively, samples can be collected into an empty vial or vial containing reagent water (with or without preservative) and stored frozen at < -7°C.

NOTE: Soil samples that contain carbonate minerals (either from natural sources or applied as an amendment) may effervesce upon contact with the acidic preservative solution option in the low concentration sample vial. If the amount of gas generated is very small (i.e., several mL), any loss of volatiles as a result of such effervescence may be minimal if the vial is sealed quickly. However, if larger amounts of gas are generated, not only may the sample lose a significant amount of analyte, but the gas pressure may shatter the vial if the sample vial is sealed. Therefore, when samples are known or suspected to contain high levels of carbonates, a test sample should be collected, added to a vial, and checked for effervescence. If a rapid or vigorous reaction occurs, discard the sample and collect low concentration samples in vials without chemical preservation.

8.2.1.3 When practical, use a portable balance to weigh the sealed vial containing the sample to ensure that 5.0 ± 0.5 g of sample were added. The balance should be calibrated in the field using an appropriate weight for the sample containers employed (Sec. 6.5.5). Record the weight of the sealed vial containing the sample to the nearest 0.01 g.

8.2.1.4 Alternatively, collect several trial samples with plastic syringes. Weigh each trial sample and note the length of the soil column in the syringe. Use these data to determine the length of soil in the syringe that corresponds to 5.0 ± 0.5 g. Discard each trial sample.

8.2.1.5 As with the collection of aqueous samples for volatiles, collect at least two replicate samples. This will allow the laboratory an additional sample for reanalysis, if needed. The second sample should be taken from the same soil stratum or the same section of the solid waste being sampled, and within close proximity to the location from which the original sample was collected.

8.2.1.6 In addition, since the soil vial cannot be opened without compromising the integrity of the sample, at least one additional aliquot of sample must be collected for screening, moisture determination, and high concentration analysis (if necessary). This third aliquot may be collected in a 60-mL glass vial or a third 40-mL soil sample vial. However, this third vial must *not* contain the sample preservative solution, as an aliquot will be used to determine % moisture. If high concentration samples are collected in

vials containing methanol, then two additional aliquots should be collected, one for high concentration analysis collected in a vial containing methanol, and another for the moisture determination in a vial without either methanol or the low concentration aqueous preservative solution.

8.2.1.7 If samples are known or expected to contain target analytes over a wide range of concentrations, thereby requiring the analyses of multiple sample aliquots, it may be advisable and practical to take an additional sample aliquot in a low concentration soil vial containing the preservative, but collecting only 1-2 g instead of the 5 g collected in Sec. 8.2.1.1. This aliquot may be used for those analytes that exceed the instrument calibration range in the 5-g analysis.

8.2.1.8 The EnCore™ sampler has not been thoroughly evaluated by EPA as a sample storage device. While preliminary results indicate that storage in the EnCore™ device may be appropriate for up to 48 hours, samples collected in this device should be transferred to the soil sample vials as soon as possible, or analyzed within 48 hours.

8.2.1.9 The collection of low concentration soil samples in vials that contain methanol is not appropriate for samples analyzed with the closed-system purge-and-trap equipment described in this method (see Sec. 8.2.2).

8.2.2 High concentration soil samples preserved in the field

The collection of soil samples in vials that contain methanol has been suggested by some as a combined preservation and extraction procedure. However, this procedure is not appropriate for use with the low concentration soil procedure described in this method.

NOTE: The use of methanol preservation has not been formally evaluated by EPA and analysts must be aware of three potential problems. First, the use of methanol as a preservative and extraction solvent introduces a significant dilution factor that will raise the method quantitation limit beyond the operating range of the low concentration direct purge-and-trap procedure (0.5-200 µg/kg). The exact dilution factor will depend on the masses of solvent and sample, but generally exceeds 100, and may make it difficult to demonstrate compliance with regulatory limits or action levels for some analytes. Because the analytes of interest are volatile, the methanol extract cannot be concentrated to overcome the dilution problem. Thus, for samples of unknown composition, it may still be necessary to collect an aliquot for analysis by this closed-system procedure and another aliquot preserved in methanol and analyzed by other procedures. Secondly, solid samples with a significant moisture content (>10%) that are extracted prior to analysis in a water miscible solvent such as methanol are diluted by the total volume of the solvent/water mixture. (see Sec. 11.5 and Method 8000) The final problem is that the addition of methanol to the sample is likely to cause the sample to fail the ignitability characteristic, or cause it to become a listed waste, thereby requiring the unused sample volume to be managed as a hazardous waste.

8.2.2.1 When samples are known to contain volatiles at concentrations high enough that the dilution factor will not preclude obtaining results within the calibration range of the appropriate determinative method, a sample may be collected and immediately placed in a sample vial containing purge-and-trap grade methanol.

8.2.2.2 Using an appropriate sample collection device, collect approximately 5 g of sample as soon as possible after the surface of the soil or other solid material has been exposed to the atmosphere: generally within a few minutes at most. Carefully wipe the exterior of the sample collection device with a clean cloth or towel.

8.2.2.3 Using the sample collection device, add about 5 g (2 - 3 cm) of soil to the vial containing 10 mL of methanol. Quickly brush any soil off the vial threads and immediately seal the vial with the septum and screw-cap. Store samples on ice at 4 °C.

8.2.2.4 When practical, use a portable balance to weigh the sealed vial containing the sample to ensure that 5.0 ± 0.5 g of sample were added. The balance should be calibrated in the field using an appropriate weight for the sample containers employed (Sec. 6.5.5). Record the weight of the sealed vial containing the sample to the nearest 0.01 g.

8.2.2.5 Alternatively, collect several trial samples with plastic syringes. Weigh each trial sample and note the length of the soil column in the syringe. Use these data to determine the length of soil in the syringe that corresponds to 5.0 ± 0.5 g. Discard each trial sample.

8.2.2.6 Other sample weights and volumes of methanol may be employed, provided that the analyst can demonstrate that the sensitivity of the overall analytical procedure is appropriate for the intended application.

8.2.2.7 The collection of at least one additional sample aliquot is required for the determination of the moisture content, as described in Sec. 6.2.1.6. Samples collected in methanol should be shipped as described in Sec. 6.3, and must be clearly labeled as containing methanol, so that the samples are not analyzed using the closed-system purge-and-trap equipment described in this procedure.

8.2.3 High concentration sample <u>not</u> preserved in the field

The collection of high concentration bulk samples, i.e., wastes containing percent level concentrations, that are not preserved in the field generally follows similar procedures as for the other types of samples described in Secs. 8.2.1 and 8.2.2, with the obvious exception that the sample vials contain neither the aqueous preservative solution nor methanol. However, when field preservation is not employed, it is better to collect a larger volume sample, filling the sample container as full as practical in order to minimize the headspace. Such collection procedures generally do not require the collection of a separate aliquot for moisture determination, but it may be advisable to collect a second sample aliquot for screening purposes, in order to minimize the loss of volatiles in either aliquot.

8.2.4 Oily waste samples

The collection procedures for oily samples depend on knowledge of the waste and its solubility in methanol or other solvents.

8.2.4.1 When an oily waste is <u>known</u> to be soluble in methanol or PEG, the sample may be collected in a vial containing such a solvent (see Sec. 8.1.4), using procedures similar to those described in Sec. 8.2.2.

8.2.4.2 When the solubility of the oily waste is <u>not</u> known, the sample should either be collected in a vial without a preservative, as described in Sec. 8.2.3, or the

solubility of a trial sample should be tested in the field, using a vial containing solvent. If the trial sample is soluble in the solvent, then collect the oily waste sample as described in Sec. 8.2.2. Otherwise, collect an unpreserved sample as described in Sec. 8.2.3.

8.3 Sample handling and shipment

All samples for volatiles analysis should be cooled to approximately 4°C, packed in appropriate containers, and shipped to the laboratory on ice, as described in the sampling plan. See Appendix A, Secs. 3.0, 7.0, and 8.0 for additional sample handling options.

8.4 Sample storage

8.4.1 Once in the laboratory, store samples at the recommended temperature until analysis (refer to Appendix A, Secs. 3.0 and 7.4 for additional sample storage information). The sample storage area should be free of organic solvent vapors.

8.4.2 All samples should be analyzed as soon as practical, and within the designated holding time from collection. Samples not analyzed within the designated holding time must be noted and the data are considered minimum values.

8.4.3 When the low concentration samples are strongly alkaline or highly calcareous in nature, the sodium bisulfate preservative solution may not be strong enough to reduce the pH of the soil/water solution to below 2. Therefore, when low concentration soils to be sampled are known or suspected to be strongly alkaline or highly calcareous, additional steps may be required to preserve the samples. Such steps include: addition of larger amounts of the sodium bisulfate preservative to non-calcareous samples, storage of low concentration samples at <-7°C (taking care not to fill the vials so full that the expansion of the water in the vial breaks the vial), or significantly reducing the maximum holding time for low concentration soil samples. Whichever steps are employed, they should be clearly described in the sampling and QA project plans and distributed to both the field and laboratory personnel. See Sec. 8.2.1.2 for additional information.

8.4.4 See Appendix A, Secs. 3.0, 7.0, and 8.0 for additional sample storage options.

9.0 QUALITY CONTROL

9.1 Refer to Chapter One for guidance on quality assurance (QA) and quality control (QC) protocols and Method 5000 for sample preparation QC procedures. Each laboratory should maintain a formal quality assurance program. The laboratory should also maintain records to document the quality of the data generated. All data sheets and quality control data should be maintained for reference or inspection. When inconsistencies exist between QC guidelines, method-specific QC criteria take precedence over both technique-specific criteria and those criteria given in Chapter One, and technique-specific QC criteria take precedence over the criteria in Chapter One.

9.2 Before processing any samples, the analyst should demonstrate through the analysis of an organic-free reagent water method blank that all glassware and reagents are interference free. Each time a set of samples is extracted, or there is a change in reagents, a method blank should be processed as a safeguard against chronic laboratory contamination. The blank samples should be carried through all stages of the sample preparation and measurement.

9.3 Initial demonstration of proficiency - Each laboratory must demonstrate initial proficiency with each sample preparation and determinative method combination it utilizes, by generating data of acceptable accuracy and precision for target analytes in a clean matrix. The laboratory must also repeat this demonstration whenever new staff are trained or significant changes in instrumentation are made. See the Quality Control Section of Methods 5000 and 8000 for information on how to accomplish this demonstration.

9.4 Sample quality control for preparation and analysis - See the Quality Control Section of Method 5000 and Method 8000 for procedures to follow to demonstrate acceptable continuing performance on each set of samples to be analyzed. These include the method blank, either a matrix spike/matrix spike duplicate or a matrix spike and duplicate sample analysis, a laboratory control sample (LCS), and the addition of surrogates to each sample and QC sample.

9.5 It is recommended that the laboratory adopt additional quality assurance practices for use with this method. The specific practices that are most productive depend upon the needs of the laboratory and the nature of the samples. Whenever possible, the laboratory should analyze standard reference materials and participate in relevant performance evaluation studies.

9.6 The laboratory should have quality control procedures to make sure that sample integrity is not compromised during the sample collection and sample handling process, e.g., making sure that septa and vial caps do not leak, etc. (See Appendix A, Secs. 1.6 and 7.1.1) In addition, it would be advisable for the laboratory to monitor the internal standard's (IS) area counts for the low concentration samples, since leaks attributed to a poor seal with the vial caps and septa will be evident by low IS area counts. Sample containers and data results for instances where low IS area counts are observed and leaks are suspected, should be discarded.

10.0 CALIBRATION AND STANDARDIZATION

Refer to the appropriate determinative method for calibration and standardization procedures.

11.0 PROCEDURE

This section describes procedures for sample screening, the low concentration soil method, the high concentration soil method, and the procedure for oily waste samples. High concentration samples are to be introduced into the GC system using Method 5030. Oily waste samples are to be introduced into the GC system using Method 5030 if they are soluble in a water-miscible solvent, or using Method 3585 if they are not.

11.1 Sample screening

11.1.1 It is highly recommended that all samples be screened prior to the purge-and-trap GC or GC/MS analysis. Samples may contain higher than expected quantities of purgeable organics that will contaminate the purge-and-trap system, thereby requiring extensive cleanup and instrument maintenance. The screening data are used to determine which is the appropriate sample preparation procedure for the particular sample, the low concentration closed-system direct purge-and-trap method (Sec. 11.2), the high concentration (methanol extraction) method (Sec. 11.3), or the nonaqueous liquid (oily waste) methanol or PEG dilution procedure (Sec. 11.4).

11.1.2 The analyst may employ any appropriate screening technique. Three suggested screening techniques employing SW-846 methods are:

11.1.2.1 Automated headspace (Method 5021) using a gas chromatograph (GC) equipped with an appropriate detector,

11.1.2.2 Screening with a portable photoionization detector (PID) (Method 3815) or,

11.1.2.3 Extraction of the sample with hexadecane (Method 3820) and analysis of the extract on a GC equipped with a FID and/or an ECD.

11.1.3 The analyst may inject a calibration standard containing the analytes of interest at a concentration equivalent to the upper limit of the calibration range of the low concentration soil method. The results from this standard may be used to determine when the screening results approach the upper limit of the low concentration soil method. There are no linearity or other performance criteria associated with the injection of such a standard, and other approaches may be employed to estimate sample concentrations.

11.1.4 Use the low concentration closed-system purge-and-trap method (Sec. 11.2) if the estimated concentration from the screening procedure falls within the calibration range of the selected determinative method. If the concentration exceeds the calibration range of the low concentration soil method, then use either the high concentration soil method (Sec. 11.3), or the oily waste method (Sec. 11.4).

11.2 Low concentration soil method (Approximate concentration range of 0.5 to 200 µg/kg - the concentration range is dependent upon the determinative method and the sensitivity of each analyte.)

11.2.1 Initial set-up

Prior to using this introduction technique for any GC or GC/MS method, the system must be calibrated. General calibration procedures are discussed in Method 8000, while the determinative methods and Method 5000 provide specific information on calibration and preparation of standards. Normally, external standard calibration is preferred for the GC methods (non-MS detection) because of possible interference problems with internal standards. If interferences are not a problem, or when a GC/MS method is used, internal standard calibration may be employed.

11.2.1.1 Assemble a purge-and-trap device that meets the specification in Sec. 6.2 and that is connected to a gas chromatograph or a gas chromatograph/mass spectrometer system.

11.2.1.2 Before initial use, a Carbopack/Carbosieve trap should be conditioned overnight at 245°C by baking out with an inert gas flow of at least 20 mL/minute. If other trapping materials are substituted for the Carbopack/Carbosieve, follow the manufacturers recommendations for conditioning. Vent the trap effluent to the hood, not to the analytical column. Prior to daily use, the trap should be conditioned by baking for 10 minutes at 245°C. The trap may be vented to the analytical column during daily conditioning; however, the column must be run through the temperature program prior to analysis of samples.

11.2.1.3 If the standard trap in Sec. 6.2.2.2 is employed, prior to initial use, the trap should be conditioned overnight at 180°C by baking out with an inert gas flow of at least 20 mL/min, or according to the manufacturer's recommendations. Vent the trap effluent to the hood, not to the analytical column. Prior to daily use, the trap should be

conditioned by baking for 10 min at 180°C. The trap may be vented to the analytical column during daily conditioning; however, the column must be run through the temperature program prior to analysis of samples.

11.2.1.4 Establish the purge-and-trap instrument operating conditions. Adjust the instrument to inject 5 mL of water, to heat the sample to 40°C, and to hold the sample at 40°C for 1.5 minutes before commencing the purge process, or as recommended by the instrument manufacturer.

11.2.1.5 Prepare a minimum of five initial calibration standards containing all the analytes of interest and surrogates, as described in Method 8000, and following the instrument manufacturer's instructions. The calibration standards are prepared in organic-free reagent water. The volume of organic-free reagent water used for calibration must be the same volume used for sample analysis (normally 5 mL added to the vial before shipping it to the field plus the organic-free reagent water added by the instrument). When the sodium bisulfate preservation technique is used, the calibration standards should also contain approximately the same amount of the sodium bisulfate preservative as the sample (e.g., ~1 g), as the presence of the preservative will affect the purging efficiencies of the analytes. The internal standard solution must be added automatically, by the instrument, in the same fashion as used for the samples. Place the soil vial containing the solution in the instrument carousel. In order to calibrate the surrogates using standards at five concentrations, it may be necessary to disable the automatic addition of surrogates to each vial containing a calibration standard (consult the manufacturer's instructions). Prior to purging, heat the sample vial to 40°C for 1.5 minutes, or as recommended by the manufacturer.

11.2.1.6 Carry out the purge-and-trap procedure as outlined in Secs. 11.2.3. to 11.2.5.

11.2.1.7 Calculate calibration factors (CF) or response factors (RF) for each analyte of interest using the procedures described in Method 8000. Calculate the average CF (external standards) or RF (internal standards) for each compound, as described in Method 8000. Evaluate the linearity of the calibration data, or choose another calibration model, as described in Method 8000 and the specific determinative method.

11.2.1.8 For GC/MS analysis, a system performance check must be made before this calibration curve is used (see Method 8260). If the purge-and-trap procedure is used with Method 8021, evaluate the response for the following four compounds: chloromethane; 1,1-dichloroethane; bromoform; and 1,1,2,2-tetrachloroethane. They are used to check for proper purge flow and to check for degradation caused by contaminated lines or active sites in the system.

11.2.1.8.1 Chloromethane is the most likely compound to be lost if the purge flow is too fast.

11.2.1.8.2 Bromoform is one of the compounds most likely to be purged very poorly if the purge flow is too slow. Cold spots and/or active sites in the transfer lines may adversely affect response.

11.2.1.8.3 Tetrachloroethane and 1,1-dichloroethane are degraded by contaminated transfer lines in purge-and-trap systems and/or active sites in trapping materials.

11.2.1.9 When analyzing for very late eluting compounds with Method 8021 (i.e., hexachlorobutadiene, 1,2,3-trichlorobenzene, etc.), cross-contamination and memory effects from a high concentration sample or even the standard are a common problem. Extra rinsing of the purge vessel after analysis normally corrects this. The newer purge-and-trap systems often overcome this problem with better bake-out of the system following the purge-and-trap process. Also, the charcoal traps retain less moisture and decrease the problem.

11.2.2 Calibration verification (see appropriate determinative method)

Refer to Method 8000 for details on calibration verification. A single standard near the mid-point of calibration range is used for verification. This standard should also contain approximately 1 g of sodium bisulfate if the samples are also preserved in this manner.

11.2.3 Sample purge-and-trap

This method is designed for a 5-g sample size, but smaller sample sizes may be used. Consult the instrument manufacturer's instructions regarding larger sample sizes, in order to avoid clogging of the purging apparatus. The soil vial is hermetically sealed at the sampling site, and MUST remain so in order to guarantee the integrity of the sample. Gloves must be worn when handling the sample vial since the vial has been tared. If any soil is noted on the exterior of the vial or cap, it must be carefully removed prior to weighing. Weigh the vial and contents to the nearest 0.01 g, even if the sample weight was determined in the field, and record this weight. This second weighing provides a check on the field sampling procedures and provides additional assurance that the reported sample weight is accurate. Data users should be advised on significant discrepancies between the field and laboratory weights.

11.2.3.1 Remove the sample vial from storage and allow it to warm to room temperature. Shake the vial gently, to ensure that the contents move freely and that stirring will be effective. Place the sample vial in the instrument carousel according to the manufacturer's instructions.

11.2.3.2 Without disturbing the hermetic seal on the sample vial, add 5 mL of organic-free reagent water, the internal standards, and the surrogate compounds. This is carried out using the automated sampler. Other volumes of organic-free reagent water may be used, however, it is imperative that all samples, blanks, and calibration standards have exactly the same final volume of organic-free reagent water. Prior to purging, heat the sample vial to 40°C for 1.5 minutes, or as described by the manufacturer.

11.2.3.3 For the sample selected for matrix spiking, add the matrix spiking solution described in the Reagents Section of Method 5000, either manually, or automatically, following the manufacturer's instructions. The concentration of the spiking solution and the amount added should be established as described in the Quality Control Section of Method 8000.

11.2.3.4 Purge the sample with helium or another inert gas at a flow rate of up to 40 mL/minute (the flow rate may vary from 20 to 40 mL/min, depending on the target analyte group) for the appropriate purge time (usually 11 minutes) while the sample is being agitated with the magnetic stirring bar or other mechanical means. The purged analytes are allowed to flow out of the vial through a glass-lined transfer line to a trap packed with suitable sorbent materials.

11.2.4 Sample desorption

11.2.4.1 Non-cryogenic interface - After the purge, place the purge-and-trap system in the desorb mode and preheat the trap to 245°C without a flow of desorption gas. Start the flow of desorption gas at 10 mL/minute for about four minutes (1.5 min is normally adequate for analytes in Method 8015). Begin the temperature program of the gas chromatograph and start data acquisition.

11.2.4.2 Cryogenic interface - After the purge, place the purge-and-trap system in the desorb mode, make sure that the cryogenic interface is at -150°C or lower, and rapidly heat the trap to 245°C while backflushing with an inert gas at 4 mL/minute for about 5 minutes (1.5 min is normally adequate for analytes in Method 8015). At the end of the 5-minute desorption cycle, rapidly heat the cryogenic trap to 250°C. Begin the temperature program of the gas chromatograph and start the data acquisition.

11.2.5 Trap reconditioning

After desorbing the sample, recondition the trap by returning the purge-and-trap system to the purge mode. Maintain the trap temperature at 245°C (or other temperature recommended by the manufacturer of the trap packing materials). After approximately 10 minutes, turn off the trap heater and halt the purge flow through the trap. When the trap is cool, the next sample can be analyzed.

11.2.6 Data interpretation

Perform qualitative and quantitative analysis following the guidance given in the determinative method and Method 8000. If the concentration of any target analyte exceeds the calibration range of the instrument, it will be necessary to reanalyze the sample by the high concentration method. Such reanalyses need only address those analytes for which the concentration exceeded the calibration range of the low concentration method. Alternatively, if a sample aliquot of 1-2 g was also collected (see Sec. 8.2.1.7), it may be practical to analyze that aliquot for the analytes that exceeded the instrument calibration range in the 5-g analysis. If results are to be corrected for moisture content, proceed to Sec. 11.5.

11.3 High concentration method for soil samples with concentrations generally greater than 200 µg/kg.

The high concentration method for soil is based on a solvent extraction. A solid sample is either extracted or diluted, depending on sample solubility in a water-miscible solvent. An aliquot of the extract is added to organic-free reagent water containing, if applicable, internal and matrix spiking standards, purged according to Method 5030, and analyzed by an appropriate determinative method. Wastes that are insoluble in methanol (i.e., petroleum and coke wastes) are diluted with hexadecane (see Sec. 11.3.8).

NOTE: Surrogate compounds may either be spiked into the solvent at the time of extraction or the reagent water containing an aliquot of the extract prior to analysis. Since the surrogate recovery data from these two options provides assurances of either extraction or analytical efficiencies, the decision as to when the surrogates are added depends on what questions need to be answered for a given sample matrix and the intended uses of the data.

The specific sample preparation steps depend on whether or not the sample was preserved in the field. Samples that were not preserved in the field are prepared using the steps below,

beginning at Sec. 11.3.1. If solvent preservation was employed in the field, then the preparation begins with Sec. 11.3.4.

11.3.1 When the high concentration sample is not preserved in the field, the sample consists of the entire contents of the sample container. Do not discard any supernatant liquids. Whenever practical, mix the contents of the sample container by shaking or other mechanical means without opening the vial. When shaking is not practical, quickly mix the contents of the vial with a narrow metal spatula and immediately reseal the vial.

11.3.2 If the sample is from an unknown source, perform a solubility test preferably using a sample container reserved for the % moisture determination before proceeding. Remove several grams of material from the sample container. If the sample material is obtained from a vial dedicated for analysis, quickly reseal the container to minimize the loss of volatiles. Weigh 1-g aliquots of the sample into several test tubes or other suitable containers. Add 10 mL of methanol to the first tube, 10 mL of PEG to the second, and 10 mL of hexadecane to the third. Swirl the sample and determine if it is soluble in the solvent. Once the solubility has been evaluated, discard these test solutions. If the sample is soluble in either methanol or PEG, proceed with Sec. 11.3.3. If the sample is only soluble in hexadecane, proceed with Sec. 11.3.8.

11.3.3 For soil and solid waste samples that are soluble in methanol, add 9.0 mL of methanol and 1.0 mL of the surrogate spiking solution, or 10.0 mL of methanol without surrogates to a tared 20-mL vial. Using a top-loading balance, weigh 5 g (wet weight) of sample into the vial. Quickly cap the vial and reweigh the vial. Record the weight to 0.1 g. See Appendix A, Sec. 6.2.1 for methanol contact time information. If the sample was not soluble in methanol, but was soluble in PEG, employ the same procedure described above, but use 9.0 or 10.0 mL of PEG in place of the methanol. Proceed with Sec. 11.3.5.

NOTE: The steps in Secs. 11.3.1, 11.3.2, and 11.3.3 must be performed rapidly and without interruption to avoid loss of volatile organics. These steps must be performed in a laboratory free from solvent fumes.

11.3.4 For soil and solid waste samples that were collected in methanol or PEG (see Sec. 8.2.2), weigh the vial to 0.1 g as a check on the weight recorded in the field. If desired, add the surrogate spiking solution to the vial by injecting it through the septum, and proceed with Sec. 11.3.5. See Appendix A, Sec. A.6.2.1 for methanol contact time information.

11.3.5 Pipet approximately 1 mL of the extract from either Sec. 11.3.3 or 11.3.4 into a GC vial for storage, using a disposable pipet, and seal the vial. The remainder of the extract may be discarded. Add approximately 1 mL of methanol or PEG to a separate GC vial for use as the method blank for each set of samples extracted with the same solvent.

11.3.6 The extracts must be stored at 4°C in the dark, prior to analysis. Add an appropriate aliquot of the extract (based on the approximate sample concentration as noted in the table below) to 5.0 mL of organic-free reagent water containing if applicable, surrogates, internal standards, and matrix spike compounds, and analyze by Method 5030 in conjunction with the appropriate determinative method. Proceed to the Procedure Section in Method 5030 and follow the procedure for purging high concentration samples.

QUANTITY OF METHANOL EXTRACT REQUIRED FOR ANALYSIS OF HIGH CONCENTRATION SOILS/SEDIMENTS

Approximate Concentration Range	Volume of Methanol Extract[a]
500 - 10,000 µg/kg	100 µL
1,000 - 20,000 µg/kg	50 µL
5,000 - 100,000 µg/kg	10 µL
25,000 - 500,000 µg/kg	100 µL of 1/50 dilution[b]

Calculate appropriate dilution factor for concentrations exceeding those in this table.

[a] The volume of methanol added to 5 mL of water being purged should be kept constant. Therefore, add to the 5-mL syringe whatever volume of methanol is necessary to maintain a total volume of 100 µL of methanol.

[b] Dilute an aliquot of the methanol extract and then take 100 µL for analysis.

11.3.7 If results are to be reported using a correction factor for moisture content, determine the moisture content of a separate aliquot of the sample, using the procedure in Sec. 11.5, after the sample extract has been transferred to a GC vial and the vial sealed.

11.3.8 For solids that are not soluble in methanol or PEG (including those samples consisting primarily of petroleum or coking waste) dilute or extract the sample with hexadecane using the procedures in the Procedure Section of Method 3585.

11.4 High concentration method for oily waste samples

This procedure for the analysis of oily waste samples involves the dilution of the sample in methanol or PEG. However, care must be taken to avoid introducing any of the floating oil layer into the instrument. A portion of the diluted sample is then added to 5.0 mL of organic-free reagent water, purged according to Method 5030, and analyzed using an appropriate determinative method.

NOTE: Surrogate compounds may either be spiked into the solvent at the time of extraction or the reagent water containing an aliquot of the extract prior to analysis. Since the surrogate recovery data from these two options provides assurances of either extraction or analytical efficiencies, the decision as to when the surrogates are added depends on what questions need to be answered for a given sample matrix and the intended uses of the data.

For oily samples that are not soluble in methanol or PEG (including those samples consisting primarily of petroleum or coking waste), dilute or extract with hexadecane using the procedures in the Procedure Section of Method 3585.

The specific sample preparation steps depend on whether or not the sample was preserved in the field. Samples that were not preserved in the field are prepared using the steps below, beginning at Sec. 11.4.1. If methanol preservation was employed in the field, then the preparation begins with Sec. 11.4.3.

11.4.1 If the waste was not preserved in the field and it is soluble in methanol or PEG, weigh 1 g (wet weight) of the sample into a tared 10-mL volumetric flask, a tared scintillation vial, or a tared culture tube. If a vial or tube is used instead of a volumetric flask, it must be calibrated prior to use. This operation must be performed prior to opening the sample vial and weighing out the aliquot for analysis.

11.4.1.1 To calibrate the vessel, pipet 10.0 mL of methanol or PEG into the vial or tube and mark the bottom of the meniscus.

11.4.1.2 Discard this solvent, and proceed with weighing out the 1-g sample aliquot.

11.4.2 Quickly add 1.0 mL of surrogate spiking solution, if desired, to the flask, vial, or tube, and dilute to 10.0 mL with the appropriate solvent (methanol or PEG). Swirl the vial to mix the contents. See Appendix A, Sec. 6.2.1 for methanol contact time information.

11.4.3 If the sample was collected in the field in a vial containing methanol or PEG, weigh the vial to 0.1 g as a check on the weight recorded in the field. If desired, add the surrogate spiking solution to the vial by injecting it through the septum. Swirl the vial to mix the contents and proceed with Sec. 11.4.4. See Appendix A, Sec. 6.2.1 for methanol contact time information.

11.4.4 Regardless of how the sample was collected, the target analytes are extracted into the solvent along with the majority of the oily waste (i.e., some of the oil may still be floating on the surface). If oil is floating on the surface, transfer 1 to 2 mL of the extract to a clean GC vial using a Pasteur pipet. Ensure that no oil is transferred to the vial.

11.4.5 Add 10 - 50 µL of the methanol extract to 5 mL of organic-free reagent water containing if applicable, surrogates and internal standards, followed by purge-and-trap analysis, using Method 5030.

11.4.6 If necessary, prepare a matrix spike sample by adding 10 - 50 µL of the matrix spike standard dissolved in methanol to a 1-g aliquot of the oily waste. Shake the vial to disperse the matrix spike solution throughout the oil. Then add 10 mL of extraction solvent and proceed with the extraction and analysis, as described in Secs. 11.4.2 - 11.4.5. Calculate the recovery of the spiked analytes as described in Method 8000. If the recovery is not within the acceptance limits for the application, use the hexadecane dilution technique in the Procedure Section of Method 3585.

11.5 Determination of % moisture

If results are to be reported using a correction factor for moisture content, it is necessary to determine the moisture content of the sample. Also note that solid samples with a significant moisture content (>10%) that are extracted prior to analysis in a water miscible solvent such as methanol are diluted by the total volume of the solvent/water mixture. (Ref. 51) In order to report this type of sample result on an "as received" basis, the detected concentration needs to be corrected by the solvent/water dilution factor. See Method 8000 for an explanation and the applicable calculations.

NOTE: It is highly recommended that the moisture content determination only be made after the analyst has determined that no sample aliquots will be taken from the 60-mL vial for high concentration analysis. This is to minimize loss of volatiles and to avoid sample contamination from the laboratory atmosphere. There is no holding time associated with the moisture content determination. Thus, this determination can be made any time prior to reporting the sample results, as long as the vial containing the additional sample has remained sealed and properly stored.

11.5.1 Weigh 5-10 g of the sample from the 60-mL VOA vial into a tared crucible.

11.5.2 Dry this aliquot overnight at 105°C. Allow to cool in a desiccator before weighing. Calculate the % moisture as follows:

$$\% \text{ moisture} = \frac{\text{g of sample} - \text{g of dry sample}}{\text{g of sample}} \times 100$$

WARNING: The drying oven should be contained in a hood or vented. Significant laboratory contamination may result from a heavily contaminated hazardous waste sample.

12.0 DATA ANALYSIS AND CALCULATIONS

There are no calculations explicitly associated with this extraction procedure. See the appropriate determinative method and Method 8000 for calculation of final sample results.

13.0 METHOD PERFORMANCE

13.1 Single laboratory accuracy and precision data were obtained for the method analytes in three soil matrices, sand, a soil collected 10 feet below the surface of a hazardous landfill, called the C-Horizon, and a surface garden soil. Each sample was fortified with the analytes at a concentration of 20 ng/5 g, which is equivalent to 4 µg/kg. These data are listed in tables found in Method 8260.

13.2 Single laboratory accuracy and precision data were obtained for certain method analytes when extracting oily liquid using methanol as the extraction solvent. The data are presented in a table in Method 8260. The compounds were spiked into three portions of an oily liquid (taken from a waste site) following the procedure for matrix spiking described in Sec. 7.4. This represents a worst case set of data based on recovery data from many sources of oily liquid.

14.0 POLLUTION PREVENTION

14.1 Pollution prevention encompasses any technique that reduces or eliminates the quantity and/or toxicity of waste at the point of generation. Numerous opportunities for pollution prevention exist in laboratory operation. The EPA has established a preferred hierarchy of environmental management techniques that places pollution prevention as the management option of first choice. Whenever feasible, laboratory personnel should use pollution prevention techniques to address their waste generation. When wastes cannot be feasibly reduced at the source, the Agency recommends recycling as the next best option.

14.2 For information about pollution prevention that may be applicable to laboratories and research institutions consult *Less is Better: Laboratory Chemical Management for Waste*

Reduction available from the American Chemical Society's Department of Government Relations and Science Policy, 1155 16th St., N.W. Washington, D.C. 20036.

15.0 WASTE MANAGEMENT

The Environmental Protection Agency requires that laboratory waste management practices be conducted consistent with all applicable rules and regulations. The Agency urges laboratories to protect the air, water, and land by minimizing and controlling all releases from hoods and bench operations, complying with the letter and spirit of any sewer discharge permits and regulations, and by complying with all solid and hazardous waste regulations, particularly the hazardous waste identification rules and land disposal restrictions. For further information on waste management, consult *The Waste Management Manual for Laboratory Personnel* available from the American Chemical Society at the address listed in Sec. 12.2.

16.0 REFERENCES

1. Bellar, T., "Measurement of Volatile Organic Compounds in Soils Using Modified Purge-and-Trap and Capillary Gas Chromatography/Mass Spectrometry" U.S. Environmental Protection Agency, Environmental Monitoring Systems Laboratory, Cincinnati, OH, November 1991.

2. Siegrist, R. L., Jenssen, P. D., "Evaluation of Sampling Method Effects on Volatile Organic Compound Measurements in Contaminated Soils", Envir Sci Technol, 1990; 24; 1387-92.

3. Hewitt, A. D., Jenkins, T. F., Grant, C. L., "Collection, Handling and Storage: Keys to Improved Data Quality for Volatile Organic Compounds in Soil", Am Environ Lab, 1995; 7(1); 25-8.

4. Liikala, T. L., Olsen, K. B., Teel, S. S., Lanigan, D. C., "Volatile Organic Compounds: Comparison of Two Sample Collection and Preservation Methods", Envir Sci Technol, 1996; 30; 3441-7.

5. Lewis, T. E., Crockett, A. B., Siegrist, R. L., Zarrabi, K., "Soil Sampling and Analysis for Volatile Organic Compounds", Envir Monitoring & Assessment, 1994; 30; 213-46.

6. Hewitt, A. D., "Enhanced Preservation of Volatile Organic Compounds in Soil with Sodium Bisulfate", SR95-26, U. S. Army Cold Regions Research and Engineering Laboratory, Hanover, NH.

7. Hewitt, A. D., Lukash, N. J. E., "Sampling for In-Vial Analysis of Volatile Organic Compounds in Soil", Am Environ Lab, 1996; Aug; 15-9.

8. Hewitt, A. D., Miyares, P. H., Sletten, R. S., "Determination of Two Chlorinated Volatile Organic Compounds in Soil by Headspace Gas Chromatography and Purge-and-Trap Gas Chromatography/Mass Spectrometry", Hydrocarbon Contaminated Soils, 1993, 3; 135-45, Chelsea, MI, Lewis Publishers.

9. Hewitt, A. D., "Methods of Preparing Soil Samples for Headspace Analysis of Volatile Organic Compounds: Emphasis on Salting Out", 12th Annual Waste Testing and Quality Assurance Symposium, Washington, DC, 1996, 322-9.

10. Hewitt, A. D., Miyares, P. H., Leggett, D. C., Jenkins, T. F., "Comparison of Analytical Methods for Determination of Volatile Organic Compounds", Envir Sci Tech, 1992; 26; 1932-8.

APPENDIX C

NAVY, EPA ACM GUIDANCE

DEPARTMENT OF THE NAVY
COMMANDER, NAVY INSTALLATIONS COMMAND
2713 MITSCHER ROAD, SW
ANACOSTIA ANNEX, DC 20373-5802

CNICINST 5100.1
N3
DEC 07 2006

CNIC INSTRUCTION 5100.1

From: Commander, Navy Installations Command

Subj: ASBESTOS MANAGEMENT PROGRAM

Ref: (a) OPNAVINST 5100.23
(b) OPNAVINST 5090.1
(c) DoD 4715-15-G, Overseas Environmental Baseline Guidance Document of 15 Mar 00

Encl: (1) Asbestos Management Plan

1. Purpose. The purpose of this instruction is to provide policy guidance and assignment of responsibilities for the coordination of a comprehensive asbestos management program at Navy region commands and installations.

2. Background. The asbestos management program serves as the principal method for Commander, Navy Installations Command (CNIC), to implement standards for the periodic inspection, sampling, control, evaluation, maintenance, and abatement of asbestos containing material (ACM) as specified by references (a) through (c) as well as applicable Overseas Final Governing Standards (FGS).

3. Objective. The primary objective of the asbestos management program is to protect personnel onboard Navy installations from harmful exposures to airborne asbestos fibers through:

a. Periodic inspection of all asbestos materials;

b. Operations and maintenance activities that repair, encapsulate, or remove asbestos containing material;

c. Documentation and notification of asbestos-related activities; and

d. Strict compliance with this instruction and all other applicable federal, state, and local laws and regulations.

4. Scope and Applicability. This instruction applies to all Navy installations in the United States, its territories and possessions, and overseas. This instruction applies to all facilities, structures and op ations on Navy installations where asbestos is found.

5. Responsibilities

a. Regional and Installation Safety Departments. Safety Managers are responsible for Navy occupational safety and health compliance related to all asbestos work. Safety managers, working in coordination with Navy or contractor industrial hygiene professionals, shall take all necessary steps to prevent worker asbestos exposure issues, including personal or area air sampling for friable asbestos. At regional and installation levels:

(1) Safety managers are assigned overall responsibility for Navy asbestos worker protection involving all regulatory issues on asbestos worker exposure including federal regulatory requirements specified in reference (a) for listed toxic and hazardous substances in general industry (29 CFR 1910.1001) and construction (29 CFR 1926.1101). In addition, safety managers are responsible for ensuring that occupants of buildings (that contain asbestos) are not exposed to asbestos that has the potential to release airborne asbestos fibers.

(2) Safety managers will work closely with the designated respiratory protection program manager. The respiratory protection program manager will implement written policies and procedures per reference (a) including implementation of proper medical surveillance program requirements.

(3) Contractors are responsible for the supervision of contractor asbestos removal personnel.

b. Regional and Installation Environmental Departments. Unless otherwise designated in writing by the regional or installation commanding officer, the installation environmental department shall be the lead in all regulatory matters involving the collection, storage, transportation and disposal of government-generated asbestos-containing waste material (ACWM). Environmental provides regulatory support, oversight and direction. Environmental departments coordinate disposal and

provide regulatory support, oversight and direction, but does not fund the disposal cost. For government generated ACM, Facilities fund the disposal and perform the ACM handling and disposal. For ACM generated during contractor projects, the project funds the disposal, and the contractor performs ACM handling and disposal. The environmental department shall perform Environmental Quality Assessments of the Asbestos Management Program to ensure compliance with National Emissions Standards for Hazardous Air Pollutants (NESHAP) requirements. Additionally, the environmental department shall provide regulatory interface between the installation and federal, state, and local environmental agencies with respect to asbestos containing waste material. Preparation of federally mandated National Environmental Policy Act (NEPA) documentation prior to construction contract award for all proposed projects on Navy installations including any activity involving known or presumed contact with asbestos material that may generate asbestos containing waste. Simple Categorical Exclusion (CATEX) NEPA documents may be prepared by the Facilities' Program.

c. Regional and Installation Facility Departments. A representative from the installation facility department shall serve as the installation asbestos program manager. The installation asbestos program manager shall work closely with installation safety and environmental departments to ensure compliance with all applicable asbestos regulations. Asbestos program manager responsibilities shall include serving as lead for:

(1) Implementation of the asbestos operation and maintenance plan and principal point of contact for completion of federal, state, and local laws and compliance requirements for documentation and notification of all asbestos-related activities.

(2) Completion of building surveys to determine if ACM or presumed asbestos containing materials (PACM) are present anywhere in a building, and if so, determine the location, square footage and type of asbestos present from bulk sampling of ACM or PACM. Specific responsibility for such surveys is to ensure that the required determination for the presence of friable and non-friable ACM or the presence of PACM is completed before any demolition; repair or renovation work is done.

(3) Asbestos project design and abatement. Asbestos designers assigned to asbestos project design and abatement shall complete specialized training in accordance with appendix 17-B of reference (a). Assigned project designers shall use data gathered by asbestos inspectors to assess potential asbestos hazards and prepare asbestos remediation plans. Asbestos project plans shall include scope, timing, phasing and determination of remediation methods and specifications for any asbestos project.

(4) Completion of an annual review and update of the installation asbestos management plan, and the operations and maintenance (O&M) plan.

(5) Implementation of federal Environmental Protection Agency (EPA) rules on Asbestos Hazard Emergency Response Act (AHERA), 40 CFR 763, and the 1992 Asbestos School Hazard Abatement Reauthorization Act (ASHARA). AHERA responsibility includes documentation of ACM management in schools (including child day care facilities) and ASHARA regulations extended AHERA regulations to cover public and commercial buildings.

(6) Implementation of EPA Clean Air Act amendments on NESHAP, 40 CFR 61. NESHAP responsibility involves documentation of installation compliance with state and federal emission control procedures and appropriate work practices during collection, packaging, transportation or disposal of friable ACM waste.

d. All other departments and tenant commands will comply with the requirements for handling and/or possessing asbestos material as specified in enclosure (1). Smaller installations with host-tenant relationships may use the building manager or facility representative to act as the liaison with the host installation when a written agreement exists specifying that the host installation is responsible for carrying out asbestos program management responsibilities. Each host or tenant command shall provide annual asbestos awareness training to their personnel who occupy buildings that contain asbestos.

6. Action. Regional and installation commanders shall develop program guidance based on references (a) and (b) and this instruction.

7. Effective Date. This instruction is effective immediately.

R. T. CONWAY, JR.
Vice Admiral, U.S. Navy

Distribution:
Electronic only, via E-Rooms, CNIC, Policies and Procedures
HTTP://EROOM.NAVAIR.NAVY.MIL/EROOM/CNI/CNI-MAIN/0 2453

ASBESTOS PROGRAM MANAGEMENT

1. Introduction. This Asbestos Management Plan consolidates all asbestos-related activities on Navy installations, to include all installation departments and tenant commands. It includes an Operation and Maintenance (O&M) Plan for management of in-place asbestos, an inventory of asbestos, and a record of abatement actions. The plan will be used in coordination with references (a) and (b) to identify asbestos material, maintain required documentation and ensure proper notification, collection and disposal.

2. Definitions

a. Asbestos-Containing Material (ACM) - Any material containing more than one percent asbestos as determined using polarized light microscopy according to the method specified in Appendix A, Subpart F, 40 C.F.R. part 763, section 1, Polarized Light Microscopy.

b. Asbestos-Containing Waste Materials - Mill tailings or any waste that contains commercial asbestos. This includes filters from control devices, friable asbestos waste material and bags or other packing contaminated with asbestos. As applied to demolition and renovation operations, this term also includes regulated asbestos-containing material waste and materials contaminated with asbestos including disposable equipment and clothing.

c. Asbestos Program Manager (APM) - A designated representative in the installation facility office who supervises all aspects of the asbestos management and control program. The APM duties can be performed as collateral duty.

d. Glove Bag - A polyethylene or polyvinyl chloride bag-like enclosure affixed around an asbestos-containing source so that the material may be removed while minimizing release of airborne fibers to the surrounding atmosphere.

e. High-Efficiency Particulate Air Filter (HEPA) - HEPA filters are rated to trap at least 99.97 percent of all particles 0.3 microns in diameter or larger.

f. Industrial Hygienist - A professional qualified by education, training and experience to anticipate, recognize, evaluate and develop controls for occupational health hazards.

g. Miscellaneous ACM - Interior building materials on structural components, structural members or fixtures, such as floor and ceiling tiles and does not include surfacing material or thermal insulation (reference 40 CFR 763.83).

h. Regulated Asbestos-Containing Material (RACM) - Friable asbestos material, Category I non-friable asbestos-containing material that has become friable. Category I non-friable asbestos-containing material that will be or has been subjected to sanding, grinding, cutting, or abrading, or Category II non-friable asbestos-containing material that has a high probability of becoming or has become crumbled, pulverized, or reduced to powder by the forces expected to act on the material in the course of demolition or renovation operations.

i. Resilient Floor Covering - Asbestos-containing floor tile, including asphalt and vinyl floor tile, and sheet vinyl floor covering containing more than one percent asbestos as determined using polarized light microscopy according to the method specified in Appendix A, Subpart F, 40 C.F.R. part 763, section 1, Polarized Light Microscopy.

j. Surfacing Material - ACM which is sprayed or troweled onto surfaces. Examples include the underside of concrete slabs or decking, fire-proofing materials on structures and decorative plaster on ceilings or acoustic tiles.

k. Thermal System Insulation (TSI) - ACM applied to pipes, boilers, tanks and ducts to prevent heat loss or gain.

3. Classes of Asbestos - Refer to regulated ACM guidance available via the Internet at the following web address: http://www.epa.gov/region4/air/asbestos/asbmatl.htm

a. Friable Asbestos - Any material that contains greater than one percent asbestos and can be crumbled, pulverized or reduced to powder by hand pressure. This may also include previously non-friable material which becomes broken or damaged

by mechanical force.

b. Category I - Any non-friable asbestos-containing packings, gaskets, resilient floor coverings and asphalt roofing products which contain more than one percent asbestos. These non-friable ACM materials when crushed or pulverized may become friable.

c. Category II - Any non-friable ACM, excluding Category I non-friable ACM, which contains more than one percent asbestos and cannot be crumbled, pulverized or reduced to powder by hand pressure.

4. Identification

a. Building survey and material evaluation is the initial step in any asbestos related action. If asbestos is found, further measures to determine the condition and type of asbestos will be required.

(1) Facility related construction material which includes:

(a) Pipe and boiler insulation;

(b) Roof tiles;

(c) External shingles;

(d) Vinyl floor tiles;

(e) Acoustic ceiling tiles, or coatings;

(f) Cementatious (transite) materials;

(g) Mastic;

(h) Textured wall surfaces;

(2) Fire retardant asbestos furniture which includes:

(a) Filing cabinets;

(b) Safes;

(3) Equipment and parts containing asbestos includes:

(a) Brake shoes;

(b) Gaskets;

(c) Clutch plates;

(d) Aircraft parts;

b. A bulk sample of the suspected substance must be examined for asbestos by a qualified laboratory. Once the characteristics of the asbestos are compiled, a detailed assessment of necessary action can begin.

c. Asbestos regulations require that an accredited inspector perform the asbestos survey. Persons conducting asbestos surveys must be trained in accordance with section 1708 and appendix 17-B of reference (a). The person responsible for determining the presence of asbestos must have a general knowledge of building construction and materials of construction, where and how asbestos was applied to buildings; a knowledge of how to sample for ACM; and a knowledge of the analytical methods and interpretation of data used for determining the presence of ACM.

5. Assessment

a. Proper assessment of a facility containing asbestos is an important step in a successful management program. Occupancy requirements and actual asbestos characteristics are combined to make the necessary assessment. Because the possibility of exposure to asbestos can vary with personnel operations, both the number of assigned employees and the duration of occupancy are important in determining the required action.

b. Material percentage, friability, accessibility and condition are elements within asbestos characteristics. The percentage of asbestos within a material has direct relationship to the possibility of exposure.

c. If a substance is friable, the potential for airborne fibers is significantly higher and more dangerous than with a non-friable or encapsulated substance. The potential for fiber release can also be increased by the actual condition of damaged or deteriorated material. If an area containing asbestos material is accessible by personnel, the hazard is also increased.

d. After the occupancy requirements and asbestos characteristics are evaluated, the facility is categorized as either requiring action such as abatement or requiring maintenance within the Operations and Maintenance (O&M) program. If a facility contains damaged friable pipe lagging in an exposed area, an appropriate abatement procedure shall be required. Upon assessment, if the asbestos material is in good condition, abatement would not be necessary. The facility containing currently safe material would be included in the operation and maintenance plan.

6. Operations and Maintenance Program

a. The Operations and Maintenance (O&M) Program is designed to maintain a current inventory of all in-place asbestos. This will result in information that will assist in daily operations of occupant and facilities maintenance personnel. The operations and maintenance program will include:

(1) An installation-wide inventory of facilities containing asbestos. This section will indicate potentially-hazardous facilities.

(2) A notification program to inform occupants of asbestos location and awareness training, including how to avoid disturbing asbestos.

(3) A periodic inspection and air monitoring schedule for detecting changes in condition of asbestos.

(4) Asbestos schedules for removal identified in the O&M program until abatement is completed.

(5) In the event of an unscheduled release episode, the APM and installation occupational safety and health (OSH) office will be contacted immediately. Depending on severity, the APM,

asbestos consultants, and abatement contractors will develop a strategy for conducting clean-up operations, per references (a) and (b).

b. The O&M program is intended to prevent the release of asbestos fibers by minimizing disturbance or damage to ACM during normal operations, and by monitoring the condition of ACM.

7. Abatement

a. If the assessment findings determine that abatement action is necessary, a long-term control measure must be specified. Either containment or removal is the appropriate procedure. Potential hazard, accessibility, and abatement costs are factors addressed when selecting the most appropriate procedure. The two methods of containment include:

(1) Encapsulation - This method involves application of material which will envelop the fiber matrix. This provides minimal protection against contact disturbance. This procedure should not be considered when the surfaces are:

(a) In direct contact with occupants;

(b) Subject to water damage;

(c) Subject to structural vibrations; and/or

(d) Insufficient strength to bear the weight of itself and the encapsulate.

(2) Enclosure - This method isolates the asbestos within a barrier to prohibit any fiber release into occupant work areas. This barrier, usually constructed of a framework and gypsum board, should not be accessible to occupants. This enclosure procedure should not be selected if:

(a) Damage during routine activities is a possibility; and/or

(b) Condensation might build up;

8. Removal

a. Removal is a long-term permanent solution by eliminating the contaminated source.

b. Although removal is recommended, removal can be the most costly, complicated, and time-consuming technique. The elimination of exposure potential is the major advantage. Disadvantages include cost, feasibility and location of material.

9. Asbestos Abatement Personnel

a. Abatement, including renovation and demolition, normally will be contracted through the installation facility office. An example would be a multi-level facility requiring complete asbestos removal.

b. The APM, installation Environmental Department and Occupational Safety and Health (OSH) office will be notified prior to any and all asbestos related activities.

10. Record Keeping

a. The installation facility department will prepare NEPA documentation prior to construction contract award for proposed asbestos related activities.

b. APM documentation will include a facility inventory, assessment findings, abatement records and disposal documentation. The current status of asbestos will be updated and retained for future reference.

c. The identification and assessment phases of asbestos activities will require the following records:

(1) Survey and sampling will be conducted by qualified personnel. This section includes survey procedures, location floor plans, and sampling protocol.

(2) Facility descriptions include:

(a) Building construction specifics;

(b) Suspect materials inventory;

(c) Sampling summary; and

(d) Inaccessible area determination;

(3) Laboratory Data Sheets include:

(a) Date of samples taken;

(b) Sample description;

(c) Percent of asbestos;

(d) Type of asbestos;

(4) Abatement Alternatives and Considerations. This section compiles the information within the assessment and recommends the most appropriate action. In most instances, the assessment will be performed and the data compiled by a qualified assessment contractor. It will be retained by the APM.

d. Abatement Records. If the findings within the assessment require action, both Federal Occupational Safety and Health Administration (OSHA) and Environmental Protection Agency (EPA), have specific test requirements, the following documentation will be required:

(1) Contract specifications including:

(a) Asbestos abatement contracts and abatement contract specifications will be prepared for appropriate personnel.

1. Abatement contracts and specifications will be reviewed by installation Environmental Department and OSH.

2. Abatement work executed by installation personnel or installation contractors requires that records required by regulation be compiled and retained.

(b) The contract specifications require an asbestos hazard abatement plan which will include:

1. Federal, state, and local regulation proof of compliance

2. Description of work

3. Equipment

   a. Respiratory Protection

   b. Protective Clothing

   c. Change room

   d. Eye protection

   e. Exhaust systems

4. Work Procedures

   a. General procedures

   b. Asbestos control measure

   c. Removal method (if applicable)

   d. Clean-up

   e. Monitoring

   f. Removal and disposal

(c) Specifications will also require each contractor to prepare a respirator protection program and include it within the initial submittal.

(2) Abatement Notification. A pre-work notification may be required by local (city, county or state) environmental regulation and management authorities depending on the asbestos quantity involved, as measured in linear, square, or cubic feet. Typically contract specifications require the respective asbestos contractor to provide this notification to local environmental authorities. Abatement notification will be documented by the APM. In NAVFACENGCOM-related contract abatement, the construction representative will obtain a copy of

the notification and forward it to the APM for maintenance prior to the start of any removal work.

(3) A record of asbestos related actions not requiring notification to local environmental authorities must also be maintained by the APM. If the sum of the non-reportable abated material results in more than the quantity for EPA notification, a report must be compiled. Where applicable, any asbestos removal project fees based upon the amount of asbestos being removed will be paid by the contractor at the time of notification to the local environmental authorities.

(4) Disposal Records. Asbestos waste requires stringent handling, manifesting, and disposal procedures. During any abatement activity, certain disposal provisions will be followed. These provisions include:

(a) Depositing all asbestos waste material at a pre-designated staging site.

(b) Discharge no visible emissions to the outside air from the transfer of the asbestos waste.

(c) When waste material is transported off the site, maintain shipment records and manifests. Designated Navy personnel will be required to sign the manifest as the waste generator. These records will be maintained by the APM.

http://www.epa.gov/region4/air/asbestos/asbmatl.htm
Last updated on Friday, May 29th, 2009.

Region 4: Asbestos

Asbestos/NESHAP Regulated Asbestos Containing Materials Guidance

1. INTRODUCTION:

Section 112 of the Clean Air Act (CAA) requires EPA to develop emission standards for hazardous air pollutants. In response to this section the Environmental Protection Agency (EPA) published a list of hazardous air pollutants and promulgated the "National Emission Standards for Hazardous Air Pollutants" (NESHAP) regulations. Since asbestos presents a significant risk to human health as a result of air emissions from one or more source categories, it is therefore considered a hazardous air pollutant. The Asbestos NESHAP (40 CFR 61, Subpart M) addresses milling, manufacturing and fabricating operations, demolition and renovation activities, waste disposal issues, active and inactive waste disposal sites and asbestos conversion processes.

In the initial Asbestos NESHAP rule promulgated in 1973, a distinction was made between building materials that would readily release asbestos fibers when damaged or disturbed and those materials that were unlikely to result in significant fiber release. The terms "friable" and non-friable" were used to make this distinction. EPA has since determined that, if severely damaged, otherwise non-friable materials can release significant amounts of asbestos fibers.

Friable asbestos-containing material (ACM), is defined by the Asbestos NESHAP, as any material containing more than one percent (1%) asbestos as determined using the method specified in Appendix A, Subpart F, 40 CFR Part 763, Section 1, Polarized Light Microscopy (PLM), that, when dry, can be crumbled, pulverized or reduced to powder by hand pressure. (Sec. 61.141)

Non-friable ACM is any material containing more than one percent (1%) asbestos as determined using the method specified in Appendix A, Subpart F, 40 CFR Part 763, Section 1, Polarized Light Microscopy (PLM), that, when dry, cannot be crumbled, pulverized, or reduced to powder by hand pressure. EPA also defines two categories of non-friable ACM, Category I and Category II non-friable ACM, which are described later in this guidance.

"Regulated Asbestos-Containing Material" (RACM) is (a) friable asbestos material, (b) Category I non-friable ACM that has become friable, (c) Category I non-friable ACM that will be or has been subjected to sanding, grinding, cutting or abrading, or (d) Category II non-friable ACM that has a high probability of becoming or has become crumbled, pulverized, or reduced to powder by the forces expected to act on the material in the course of demolition or renovation operations.

The purpose of this document is to assist asbestos inspectors and the regulated community in determining whether or not a material is RACM and thus subject to the Asbestos NESHAP.

The recommendations made in this guidance are solely recommendations. They are not the exclusive means of complying with the Asbestos NESHAP requirements. Following these recommendations is not a guarantee against findings of violation. The EPA intends for owners/operators to be reasonably certain whether or not they are subject to the NESHAP. In the end, if a question arises, determinations of whether asbestos containing materials are regulated by the Asbestos NESHAP are made by EPA inspectors on site.

2. FRIABLE ASBESTOS-CONTAINING MATERIALS:

Due to their high tensile strength, incombustibility, corrosion and friction resistance and other properties, such as acoustical and thermal insulation abilities, asbestos fibers have been incorporated into over thirty-six hundred (3600) commercial products. Thermal system, fireproofing and acoustical insulation materials have been used extensively in the construction industry.

Thermal system applications include steam or hot water pipe coverings and thermal block insulation found on boilers and hot water tanks. Fireproofing insulation may be found on building structural beams and decking. Acoustical insulation (soundproofing) commonly has been applied as a troweled-on plaster in school and office building stairwells and hallways. Unfortunately, with time and exposure to damaging forces (e.g., severe weather, chemicals, mechanical forces, etc.), many asbestos-containing materials may become crumbled, pulverized or reduced to powder, thereby releasing asbestos fibers, or may deteriorate to the extent that they may release fibers if disturbed. Since inhalation of asbestos fibers has been linked to the development of respiratory and other diseases, any material which is friable, or has a high probability of releasing fibers, must be handled in accordance with the Asbestos NESHAP.

The following work practice should be followed whenever demolition/renovation activities involving RACM occur:

Notify EPA of intention to demolish/renovate,

remove all RACM from a facility being demolished or renovated before any disruptive activity begins or before access to the material is precluded,

keep RACM adequately wet before, during, and after removal operations,

conduct demolition/renovation activities in a manner which produces no visible emissions to the outside air, and

handle and dispose of all RACM in an approved manner.

3. non-friable ASBESTOS-CONTAINING MATERIALS:

Because of the resilient nature of asbestos, it is used in materials exposed to a wide variety of stressful environments. These environments can cause the deterioration of binding materials and cause non-friable materials to become friable. For example, asbestos-containing packings and gaskets (Category I non-friable ACM) used in thermal systems may be found in poor condition as a result of the heat they have encountered. In petrochemical handling facilities, which may have miles of transfer pipes and fittings which contain asbestos gaskets and/or packings, profound degradation of the ACM may occur due to exposure to organic-based liquids and gases or to corrosive agents used to chemically clean these lines.

When non-friable ACM is subjected to intense mechanical forces, such as those encountered during demolition or renovation, it can be crumbled, pulverized, or reduced to powder, and thereby release asbestos fibers. When non-friable materials are damaged or are likely to become damaged during such activities, they must be handled in accordance with the Asbestos NESHAP.

There are two categories of non-friable materials: Category I non-friable ACM and Category II non-friable ACM.

CATEGORY I non-friable ACM

Category I non-friable ACM is any asbestos-containing packing, gasket, resilient floor covering or asphalt roofing product which contains more than one percent (1%) asbestos as determined using polarized light microscopy (PLM) according to the method specified in Appendix A, Subpart F, 40 CFR Part 763. (Sec. 61.141)

Category I non-friable ACM must be inspected and tested for friability if it is in poor condition before demolition to determine whether or not it is subject to the Asbestos NESHAP. If the ACM is friable, it must be handled in accordance with the NESHAP. Asbestos-containing packings, gaskets, resilient floor coverings and asphalt roofing materials must be removed before demolition only if they are in poor condition and are friable.

The Asbestos NESHAP further requires that if a facility is demolished by intentional burning, all of the facility's ACM, including Category I and II non-friable ACM, be considered RACM and be removed prior to burning (Sec. 61.145(c)(10)). Additionally, if Category I or Category II non-friable ACM is to be sanded, ground, cut, or abraded, the material is considered RACM and the owner or operator must abide by the following (Sec. 61.145(c)(1)):

(i) Adequately wet the material during the sanding, grinding, cutting or abrading operations.

(ii) comply with the requirements of 61.145(c)(3)(i) if wetting would unavoidably damage equipment or present a safety hazard.

(iii) Handle asbestos material produced by the sanding, grinding, cutting, or abrading, as asbestos-containing waste material subject to the waste handling and collection provisions of Section 61.150.

CATEGORY II non-friable ACM

Category II non-friable ACM is any material, excluding Category I non-friable ACM, containing more than one percent (1%) asbestos as determined using polarized light microscopy according to the methods specified in Appendix A, Subpart F, 40 CFR Part 763 that, when dry, cannot be crumbled, pulverized, or reduced to powder by hand pressure. (Sec. 61.141)

Category II non-friable ACMs (cement siding, transite board shingles, etc.) subjected to intense weather conditions such as thunderstorms, high winds or prolonged exposure to high heat and humidity may become "weathered" to a point where they become friable.

The following table lists examples and other relevant information about Category I and Category II non-friable ACM.

TABLE 1. non-friable ASBESTOS PRODUCTS

Subdivision Generic Name		Asbest %	Binder/sizing
Cementitious extrusion panels:		8	portland cement
concrete -like products	corrugated	20-45	portland cement
(Category II)	flat	40-50	portland cement
	flexible	30-50	portland cement
	flexible perforated	30-50	portland cement
	laminated (outer surface)	35-50	portland cement
	roof tiles	20-30	portland cement
	clapboard and shingles:		
	clapboard	12-15	portland cement
	siding shingles	12-14	portland cement
	roofing shingles	20-32	portland cement
	pipe	20-15	portland cement
Roofing felts	smooth surface	10-15	asphalt
(Category I)	mineral surface	10-15	asphalt
	shingles	1	asphalt
	pipeline	10	asphalt
Asbestos-containing	caulking putties	30	linseed oil
compunds	adhesive (cold applied	5-25	asphalt
(Category I and II)	roofing asphalt	5	asphalt
	mastics	5-25	asphalt
	asphalt tile cement	13-25	asphalt
	roof putty	10-25	asphalt
	plaster/stucco	2-10	portland cement
	sealants fire/water	50-55	castor oil or polyisobuxylene
	cement, insulation	20-100	clay
	cement, finishing	55	clay
	cement, magnesia	15	magnesium carbonate
Asbestos ebony products		50	portland cement
Floor tile and vinyl/asbestos tile		21	poly(vinyl)chloride
Sheet goods asphalt/asbestos tile		26-33	asphalt
Sheet goods/resilient		30	dry oils

From EPA Guidance entitled "Guidance for Controlling Asbestos- Containing Materials in Buildings" (Purple Book), appendix A, Page A-1; EPA 560/5-85-024.

Except for the following, Section 61.145(c) of the Asbestos NESHAP requires that each owner or operator of a demolition or renovation activity involving RACM remove all such material from a facility being demolished or renovated before any activity begins that would break up, dislodge, or similarly disturb the material or preclude access to the material for subsequent removal.

ACM need not be removed before demolition if it:

(i) Is a Category I non-friable ACM that is not friable.

(ii) Is on a facility component that is encased in concrete or other similarly hard material and

is adequately wet whenever exposed during demolition.

(iii) Was not accessible for testing and therefore was not discovered until after demolition began and, as a result of the demolition, cannot be safely removed. If not removed for safety reasons, the exposed RACM and any asbestos-contaminated debris must be treated as asbestos-containing waste material and kept adequately wet at at all times until disposed of.

(iv) Is a Category II non-friable ACM and the probability is low that the material will become crumbled, pulverized, or reduced to powder during demolition.

4. INSPECTION PROCEDURES TO DETERMINE THE POTENTIAL FOR FIBER RELEASE FROM non-friable ASBESTOS-CONTAINING MATERIALS:

Members of the regulated community (i.e. abatement contractors, industrial hygienists, building owners & operators, etc.) should become familiar with these procedures as they are designed to enhance compliance with the Asbestos NESHAP.

GENERAL INSPECTION PROCEDURES

1. Identify all non-friable suspect ACM and determine whether it is Category I or II.

2. If it is Category I non-friable RACM:

Is it in "poor condition?" [Is the binding of the ACM losing its integrity? Is the ACM peeling, cracking, or crumbling? (Remember, friable ACM may not appear in poor condition.)]

Is it friable?

- Collect a piece of dry ACM and seal it in a transparent, reclosable sample bag.

- Apply hand pressure and observe if the ACM falls apart to the extent that it is crumbled, pulverized, or reduced to powder. Does it occur suddenly, all at once?

- Send representative samples of the RACM to an analytical laboratory which is able to test them for the presence of asbestos according to the methods specified in 40 CFR Part 763 Subpart F, Appendix A.

- Ask the owner/operator if any ACM or RACM has been sampled and analyzed. If so, determine where the samples were taken and ask if the methods of demolition/renovation were considered when assessing the fiber release potential of the material. Will it or has it been subjected to sanding, grinding, cutting or abrading?

3. If it is Category II non-friable ACM:

- Has the material been crumbled, pulverized or reduced to powder or is there a high probability that it will be crumbled, pulverized or reduced to powder during the demolition/renovation operations, thus rendering the material friable and subject to the Asbestos NESHAP?

- If Category II non-friable ACM has been or will be crumbled, pulverized, or reduced to powder by demolition or renovation forces, take representative samples and send them to a laboratory to test for the presence of asbestos according to the method specified in 40 CFR Part 763, Subpart F, Appendix A.

5. SPECIFIC INSPECTION PROCEDURES:

CATEGORY I non-friable ACM

Packings and Gaskets

These materials are often very difficult to find because they are usually placed inside ovens, doors, pipes, boilers, etc. Often a packing or gasket is discovered during a stripping or demolition activity. For example, some boilers have an asbestos containing paraffin wax packing between the steam lines that travel between the mud and fire boxes. The paraffin binding of the packing may decompose due to the high temperatures, and render the packing friable. Observe all of the packing and note areas that are in poor condition. Packings in poor condition appear dry and discolored, and fibers may be visible.

A representative piece of asbestos-containing packing material (in good or poor condition) should be removed with a utility knife and sealed in a transparent, reclosable bag. Apply hand pressure to the packing in the sample bag to determine if any portion is crumbled, pulverized or reduced to powder. If the material simply deforms, but does not crumble or reduces to a powder, then the material is considered non-friable.

Resilient Floor Covering

There is a wide variety of resilient floor covering applications that contain asbestos. The most common are linoleum flooring and vinyl asbestos tile (VAT). VAT is most commonly found in either a 9"x9" or a 12"x12" square size. The 9"x9" VAT's are normally found in older buildings because they were manufactured earlier than the 12"x12" VAT's; however, floor tile sizes and resilient floor covering applications vary greatly since many buildings have been re-tiled several times.

In order to determine if a resilient floor covering is in poor condition look for sections or tiles which are cracked or peeling to the extent that they are crumbled. Floor coverings in poor condition can often be found near doorways or loading/staging areas where the floor has sustained a lot of stress and traffic. If the floor covering is in poor condition, collect a small representative sample and seal it in a transparent, sample bag. Hand pressure should be applied to determine if the material can be crumbled, pulverized, or reduced to powder. If it can, the material is considered friable. Resilient floor covering that will be or has been sanded, ground or abraded is subject to the Asbestos NESHAP.

Asphalt Roofing Products

Asbestos-containing roofing felts have been widely used in "built-up" roofs. Built-up roofing was used on flat surfaces and consists of alternating layers of roofing felt and asphalt. The roofing felt consists of asbestos paper saturated and coated with asphalt. Asphalt-asbestos roofing products made from roofing felt coated with asphalt were reportedly used on residential structures for only a short time (1971-1974).

To determine if an asphalt roofing product is covered by the Asbestos NESHAP, examine the RACM to spot any areas where the material is in poor condition and friable.

If possible, sample areas where fibers can be seen protruding from the matrix of the asphalt. The sample should be sealed into a transparent, reclosable sample bag and hand pressure applied to see if the sample can be crumbled, pulverized, or reduced to powder.

CATEGORY II non-friable ACM

Asbestos Cement Pipe and Sheet Products

Asbestos-cement (A-C) pipe has been widely used for water and sewer mains and occasionally used as electrical conduits, drainage pipe, and vent pipes. A-C sheet, manufactured in flat or corrugated panels and shingles (transite board), has been used primarily for roofing and siding, but also for cooling tower fill sheets, canal bulkheads, laboratory tables, and electrical switching gear panels. If these ACM are crumbled, pulverized or reduced to a powder, they are friable and thus covered by the Asbestos NESHAP. Broken edges of these material typically are friable. The fractured surface should be rubbed to see if it produces powder.

If Category II non-friable ACM has not crumbled, been pulverized or reduced to powder and will not become so during the course of demolition/renovation operations, it is considered non-friable and therefore is not subject to Asbestos NESHAP. However, if during the demolition or renovation activity it becomes crumbled, pulverized or reduced to powder, it is covered by the Asbestos NESHAP.

DISCLAIMER and ACKNOWLEDGEMENTS

This document was written by Alliance Technologies, Inc., based on discussions with a work group from EPA. The group consisted of the Regional Asbestos NESHAP Coordinators, Ron Shafer, Scott Throwe, and Omayra Salgado of the Stationary Source Compliance Division, Charles Garlow and Elise Hoerath of the Air Enforcement Division and Sims Roy of the Standards Development Branch. We thank the individuals who reviewed an earlier draft and provided comments, many of which are incorporated in the final version. Their input is gratefully acknowledged.

For information about the contents of this page please contact John Hund

APPENDIX D

DETECTION LIMITS REQUIRED

APPENDIX D
REQUIRED COMPOUND LIST AND QUANTITATION LIMITS
CERFA CATEGORY 3 SITES
NAS JRB WILLOW GROVE, PENNSYLVANIA

CHEMICAL	CAS	Required Quantitation Limit[6]	PADEP MSC Resident. Soil to GW TDS ≤ 2500	PADEP MSC Residential Soil 0-15 ft	PADEP MSC Non-Residential Soil Surface (0-2 ft)	PADEP MSC Non-Residential Soil Subsurfacem (2-15 ft)
METALS		**mg/kg**	**mg/kg**	**mg/kg**	**mg/kg**	**mg/kg**
ALUMINUM	7429-90-5	63000	---	1.9E+05	1.9E+05	1.9E+05
ANTIMONY	7440-36-0	9	2.7E+01	8.8E+01	1.1E+03	1.9E+05
ARSENIC	7440-38-2	4	1.5E+02	1.2E+01	5.3E+01	1.9E+05
BARIUM	7440-39-3	2700	8.2E+03	1.5E+04	1.9E+05	1.9E+05
BERYLLIUM	7440-41-7	100	3.2E+02	4.4E+02	5.6E+03	1.9E+05
CADMIUM	7440-43-9	12	3.8E+01	4.7E+01	2.1E+02	1.9E+05
CALCIUM	7440-70-2	---	---	---	---	---
CHROMIUM[1]	18540-29-9	31	1.9E+02	9.4E+01	4.2E+02	1.9E+05
COBALT	7440-48-4	2.7	8.1E+00	4.4E+03	5.6E+04	1.9E+05
COPPER	7440-50-8	2700	3.6E+04	8.2E+03	1.0E+05	1.9E+05
IRON	7439-89-6	22000	---	6.6E+04	1.9E+05	1.9E+05
LEAD	7439-92-1	150	4.5E+02	5.0E+02	1.0E+03	1.9E+05
MAGNESIUM	7439-95-4	---	---	---	---	---
MANGANESE	7439-96-5	---	---	3.1E+04	1.9E+05	1.9E+05
MERCURY	22967-92-6	3.3	1.0E+01	6.6E+01	8.4E+02	1.9E+05
NICKEL	7440-02-0	210	6.5E+02	4.4E+03	5.6E+04	1.9E+05
POTASSIUM	2023-69-5	---	---	---	---	---
SELENIUM	7782-49-2	8.6	2.6E+01	1.1E+03	1.4E+04	1.9E+05
SILVER	7440-22-4	28	8.4E+01	1.1E+03	1.4E+04	1.9E+05
SODIUM	7440-23-5	---	---	---	---	---
THALLIUM	7440-28-0	4.6	1.4E+01	1.5E+01	2.0E+02	1.9E+05
VANADIUM	7440-62-2	500	2.6E+04	1.5E+03	2.0E+04	1.9E+05
ZINC	7440-66-6	4000	1.2E+04	6.6E+04	1.9E+05	1.9E+05
CYANIDE	57-12-5	66	2.0E+02	4.4E+03	5.6E+04	1.9E+05
VOLATILES		**ug/kg**	**ug/kg**	**ug/kg**	**ug/kg**	**ug/kg**
1,1,1-TRICHLOROETHANE	71-55-6	2400	7.2E+03	1.0E+07	1.0E+07	1.0E+07
1,1,2,2-TETRACHLOROETHANE	79-34-5	3.1	9.3E+00	5.5E+03	2.8E+04	3.3E+04
1,1,2-TRICHLORO-1,2,2-TRIFLUOROETHANE	76-13-1	17000000	5.3E+07	1.9E+08	1.9E+08	1.9E+08
1,1,2-TRICHLOROETHANE	79-00-5	160	5.0E+02	2.0E+04	1.0E+05	1.2E+05
1,1-DICHLOROETHANE	75-34-3	210	6.5E+02	2.0E+05	1.0E+06	1.2E+06
1,1-DICHLOROETHENE	75-35-4	63	1.9E+02	6.4E+03	3.3E+04	3.8E+04
1,3,5-TRICHLOROBENZENE	108-70-3	1300	4.0E+03	1.3E+06	1.7E+07	1.9E+08
1,2,4-TRICHLOROBENZENE	120-82-1	2300	7.0E+03	2.2E+06	1.0E+07	1.0E+07
1,2-DIBROMO-3-CHLOROPROPANE	96-12-8	3.1	9.2E+00	3.8E+03	1.1E+04	1.2E+04
1,2-DIBROMOETHANE	106-93-4	0.4	1.2E+00	2.1E+02	9.3E+02	8.6E+03
1,2-DICHLOROBENZENE	95-50-1	19000	5.9E+04	3.8E+06	1.0E+07	1.0E+07
1,2-DICHLOROETHANE	107-06-2	33	1.0E+02	1.2E+04	6.3E+04	7.3E+04
1,2-DICHLOROPROPANE	78-87-5	36	1.1E+02	3.1E+04	1.6E+05	1.8E+05
1,3-DICHLOROBENZENE	541-73-1	20000	6.1E+04	6.6E+06	1.0E+07	1.0E+07
1,4-DICHLOROBENZENE	106-46-7	3300	1.0E+04	7.5E+05	3.3E+06	1.9E+08
1,4-DIOXANE	123-91-1	24	7.3E+01	4.1E+04	2.1E+05	2.4E+05
2-BUTANONE	78-93-3	18000	5.4E+04	1.0E+07	1.0E+07	1.0E+07
2-HEXANONE	591-78-6	---	---	---	---	---
4-METHYL-2-PENTANONE	108-10-1	960	2.9E+03	1.5E+06	4.3E+06	4.9E+06
ACETONE	67-64-1	13000	4.1E+04	1.0E+07	1.0E+07	1.0E+07
BENZENE	71-43-2	43	1.3E+02	4.1E+04	2.1E+05	2.4E+05
BROMOCHLOROMETHANE	74-97-5	530	1.6E+03	2.2E+06	1.0E+07	1.0E+07
BROMODICHLOROMETHANE	75-27-4	1100	3.4E+03	8.6E+03	4.5E+04	5.1E+04
BROMOFORM	75-25-2	96	4.4E+03	2.9E+02	1.5E+03	1.7E+03
BROMOMETHANE	74-83-9	180	5.4E+02	9.5E+04	2.7E+05	3.0E+05
CARBON DISULFIDE	75-15-0	53000	1.6E+05	1.0E+07	1.0E+07	1.0E+07
CARBON TETRACHLORIDE	56-23-5	86	2.6E+02	2.1E+04	1.1E+05	1.2E+05
CHLOROBENZENE	108-90-7	2000	6.1E+03	4.4E+06	1.0E+07	1.0E+07
CHLOROETHANE	75-00-3	1600	5.0E+03	6.2E+06	1.0E+07	1.0E+07
CHLOROFORM	67-66-3	830	2.5E+03	6.0E+03	1.7E+04	1.9E+04
CHLOROMETHANE	74-87-3	12	3.8E+01	1.8E+05	9.2E+05	1.0E+06
CIS-1,2-DICHLOROETHENE	156-59-2	530	1.6E+03	6.7E+05	1.9E+06	2.1E+06
CIS-1,3-DICHLOROPROPENE[2]	10061-01-5	40	1.2E+02	8.0E+04	4.1E+05	4.7E+05
CYCLOHEXANE	110-82-7	---	---	---	---	---
DIBROMOCHLOROMETHANE	124-48-1	1000	3.2E+03	1.2E+04	6.1E+04	7.0E+04
DICHLORODIFLUOROMETHANE	75-71-8	33000	1.0E+05	3.8E+06	1.0E+07	1.0E+07
ETHYLBENZENE	100-41-4	15000	4.6E+04	1.0E+07	1.0E+07	1.0E+07
ISOPROPYLBENZENE	98-82-8	260000	7.8E+05	7.3E+06	1.0E+07	1.0E+07
M,P-XYLENE[4]	179601-23-1	330000	9.9E+05	8.0E+06	1.0E+07	1.0E+07
METHYL ACETATE	79-20-9	230000	6.9E+05	1.0E+07	1.0E+07	1.0E+07
METHYL TERT BUTYL ETHER (MTBE)	1634-04-4	93	2.8E+02	6.2E+05	3.2E+06	3.7E+06
METHYLCYCLOHEXANE	108-87-2	---	---	---	---	---
METHYLENE CHLORIDE	75-09-2	25	7.6E+01	6.8E+05	3.5E+06	4.0E+06
O-XYLENE[4]	95-47-6	330000	9.9E+05	8.0E+06	1.0E+07	1.0E+07
STYRENE	100-42-5	8000	2.4E+04	1.0E+07	1.0E+07	1.0E+07
TETRACHLOROETHENE	127-18-4	140	4.3E+02	3.4E+05	1.5E+06	3.3E+06
TOLUENE	108-88-3	14000	4.4E+04	7.6E+06	1.0E+07	1.0E+07
TRANS-1,2-DICHLOROETHENE	156-60-5	760	2.3E+03	1.3E+06	3.7E+06	4.3E+06
TRANS-1,3-DICHLOROPROPENE[2]	10061-02-6	40	1.2E+02	8.0E+04	4.1E+05	4.7E+05
TRICHLOROETHENE	79-01-6	56	1.7E+02	1.9E+05	9.7E+05	1.1E+06
TRICHLOROFLUOROMETHANE	75-69-4	29000	8.7E+04	1.0E+07	1.0E+07	1.0E+07
VINYL CHLORIDE	75-01-4	9	2.7E+01	1.2E+04	5.3E+04	2.2E+05

APPENDIX D
REQUIRED COMPOUND LIST AND QUANTITATION LIMITS
CERFA CATEGORY 3 SITES
NAS JRB WILLOW GROVE, PENNSYLVANIA

CHEMICAL	CAS	Required Quantitation Limit[5]	PADEP MSC Resident. Soil to GW TDS ≤ 2500	PADEP MSC Residential Soil 0-15 ft	PADEP MSC Non-Residential Soil Surface (0-2 ft)	PADEP MSC Non-Residential Soil Subsurfacem (2-15 ft)
SEMIVOLATILES		ug/kg	ug/kg	ug/kg	ug/kg	ug/kg
1,1'-BIPHENYL	92-52-4	730000	2.2E+06	1.1E+07	1.4E+08	1.9E+08
2,3,4,6-TETRACHLOROPHENOL	58-90-2	310000	9.5E+05	6.6E+06	8.4E+07	1.9E+08
2,4,5-TRICHLOROPHENOL	95-95-4	2000000	6.1E+06	2.2E+07	1.9E+08	1.9E+08
2,4,6-TRICHLOROPHENOL	88-06-2	2900	8.9E+03	6.6E+04	8.4E+05	1.9E+08
2,4-DICHLOROPHENOL	120-83-2	330	1.0E+03	6.6E+05	8.4E+05	1.9E+08
2,4-DIMETHYLPHENOL	105-67-9	29000	8.7E+04	4.4E+06	1.0E+07	1.0E+07
2,4-DINITROPHENOL	51-28-5	150	4.6E+02	4.4E+05	5.6E+06	1.9E+08
2,4-DINITROTOLUENE	121-14-2	66	2.0E+02	5.8E+04	2.6E+05	1.9E+08
2,6-DINITROTOLUENE	606-20-2	1000	3.0E+03	2.2E+05	2.8E+06	1.9E+08
2-CHLORONAPHTHALENE	91-58-7	6000000	1.8E+07	1.8E+07	1.9E+08	1.9E+08
2-CHLOROPHENOL	95-57-8	1400	4.4E+03	3.3E+05	9.2E+05	1.1E+06
2-METHYLNAPHTHALENE	91-57-6	1400000	8.0E+06	4.4E+06	1.0E+07	1.0E+07
2-METHYLPHENOL	95-48-7	3300000	1.8E+08	1.0E+07	1.0E+07	1.0E+07
2-NITROANILINE	88-74-4	33	1.0E+02	1.3E+04	1.6E+05	1.9E+08
2-NITROPHENOL	88-75-5	600000	1.7E+07	1.8E+06	2.2E+07	1.9E+08
3,3'-DICHLOROBENZIDINE	91-94-1	10000	3.2E+04	4.0E+04	1.8E+05	1.9E+08
3-NITROANILINE	99-09-2	30	9.1E+01	1.3E+04	1.6E+05	1.9E+08
4,6-DINITRO-2-METHYLPHENOL	534-52-1	---	---	---	---	---
4-BROMOPHENYL PHENYL ETHER	101-55-3	---	---	---	---	---
4-CHLORO-3-METHYLPHENOL	59-50-7	36000	1.1E+05	1.1E+06	1.4E+07	1.9E+08
4-CHLOROANILINE	106-47-8	17000	5.2E+04	8.8E+05	1.1E+07	1.9E+08
4-CHLOROPHENYL PHENYL ETHER	7005-72-3	---	---	---	---	---
4-METHYLPHENOL	106-44-5	3300000	1.2E+07	1.0E+07	1.0E+07	1.0E+07
4-NITROANILINE	100-01-6	28	8.6E+01	1.3E+04	1.6E+05	1.9E+08
4-NITROPHENOL	100-02-7	1300	4.1E+03	1.8E+06	2.2E+07	1.9E+08
ACENAPHTHENE	83-32-9	1500000	4.7E+06	1.3E+07	1.7E+08	1.9E+08
ACENAPHTHYLENE[3]	208-96-8	2300000	6.9E+06	1.3E+07	1.7E+08	1.9E+08
ACETOPHENONE	98-86-2	180000	5.4E+05	1.0E+07	1.0E+07	1.0E+07
ANTHRACENE	120-12-7	110000	3.5E+05	6.6E+07	1.9E+08	1.9E+08
ATRAZINE	1912-24-9	43	1.3E+02	8.1E+04	3.6E+05	1.9E+08
BENZ[A]ANTHRACENE	56-55-3	8300	3.2E+05	2.5E+04	1.1E+05	1.9E+08
BENZALDEHYDE	100-52-7	---	---	---	---	---
BENZO[A]PYRENE	50-32-8	830	4.6E+04	2.5E+03	1.1E+04	1.9E+08
BENZO[B]FLUORANTHENE	205-99-2	8300	1.7E+05	2.5E+04	1.1E+05	1.9E+08
BENZO[G,H,I]PERYLENE	191-24-2	60000	1.8E+05	1.3E+07	1.7E+08	1.9E+08
BENZO[K]FLUORANTHENE	207-08-9	83000	6.1E+05	2.5E+05	1.1E+06	1.9E+08
BIS(2-CHLORETHOXY)METHANE	111-91-1	---	---	---	---	---
BIS(2-CHLOROETHYL)ETHER	111-44-4	5.6	1.7E+01	9.6E+02	5.0E+03	5.7E+03
BIS(2-CHLOROISOPROPYL)ETHER	108-60-1	2600	8.0E+03	3.2E+04	1.6E+05	1.9E+05
BIS(2-ETHYLHEXYL)PHTHALATE	117-81-7	43000	1.3E+05	1.3E+06	5.7E+06	1.0E+07
BUTYLBENZYLPHTHALATE	85-68-7	3300000	1.0E+07	1.0E+07	1.0E+07	1.0E+07
CAPROLACTAM	105-60-2	---	---	---	---	---
CARBAZOLE	86-74-8	27000	8.3E+04	9.0E+05	4.0E+06	1.9E+08
CHRYSENE	218-01-9	76000	2.3E+05	2.5E+06	1.1E+07	1.9E+08
DIBENZ[A,H]ANTHRACENE	53-70-3	53000	1.6E+05	2.5E+03	1.1E+04	1.9E+08
DIBENZOFURAN	132-64-9	---	---	---	---	---
DIETHYLPHTHALATE	84-66-2	53000	1.6E+05	1.0E+07	1.0E+07	1.0E+07
DIMETHYLPHTHALATE	131-11-3	---	---	---	---	---
DI-N-BUTYLPHTHALATE	84-74-2	1300000	4.1E+06	1.0E+07	1.0E+07	1.0E+07
DI-N-OCTYLPHTHALATE	117-84-0	---	---	---	---	---
FLUORANTHENE	206-44-0	1000000	3.2E+06	8.8E+06	1.1E+08	1.9E+08
FLUORENE	86-73-7	1200000	3.8E+06	8.8E+06	1.1E+08	1.9E+08
HEXACHLOROBENZENE	118-74-1	320	9.6E+02	1.1E+04	5.0E+04	1.9E+08
HEXACHLOROBUTADIENE	87-68-3	400	1.2E+03	4.4E+04	5.6E+05	1.9E+08
HEXACHLOROCYCLOPENTADIENE	77-47-4	30000	9.1E+04	1.3E+06	1.0E+07	1.0E+07
HEXACHLOROETHANE	67-72-1	180	5.6E+02	2.2E+05	2.8E+06	1.9E+08
INDENO[1,2,3-C,D]PYRENE	193-39-5	8300	2.8E+07	2.5E+04	1.1E+05	1.9E+08
ISOPHORONE	78-59-1	630	1.9E+03	1.0E+07	1.0E+07	1.0E+07
NAPHTHALENE	91-20-3	8300	2.5E+04	4.4E+06	5.6E+07	1.9E+08
NITROBENZENE	98-95-3	730	2.2E+03	1.1E+05	1.4E+06	1.0E+07
N-NITROSODIPHENYLAMINE	86-30-6	27000	8.3E+04	3.7E+06	1.6E+07	1.9E+08
N-NITROSODIPROPYLAMINE	621-64-7	1.7	5.1E+00	2.6E+03	1.1E+04	1.0E+07
PENTACHLOROPHENOL	87-86-5	1600	5.0E+03	1.5E+05	6.6E+05	1.9E+08
PHENANTHRENE	85-01-8	3300000	1.0E+07	6.6E+07	1.9E+08	1.9E+08
PHENOL	108-95-2	22000	6.6E+04	1.3E+08	1.9E+08	1.9E+08
PYRENE	129-00-0	730000	2.2E+06	6.6E+06	8.4E+07	1.9E+08

[1] The value for hexavalent chromium was used.
[2] The value for 1,3-dichloropropene was used as a surrogate for cis-1,3-dichloropropene and trans-1,3-dichloropropene.
[3] The value for acenapthene was used as a surrogate for acenaphthylene.
[4] The value for total xylenes was used as a surrogate for m,p-xylene and o-xylene.
[5] The required quantitation limit is 3X less than the most stringent PADEP MSC for that chemical.
--- Indicates that no PADEP MSC is available.
PADEP MSC, November 2001 - http://www.depweb.state.pa.us/ocrlgs/cwp/view.asp?A=1459&Q=518871&landrecwasteNav=|

APPENDIX E

CERFA CATEGORY 3 SITE DOCUMENT REVIEW NOTES

APPENDIX E
CERFA AREA OF INTEREST REVIEW NOTES
NAS JRB WILLOW GROVE

SITE	DESCRIPTION	Notes after Tetra Tech Table Top Investigation	ACTION REQUIRED	HAND AUGER BORINGS	DIRECT PUSH BORINGS	SOIL SAMPLES	PACM SAMPLES	LAB ANALYSIS	DECISION STATEMENT
Lead-Based Paint									
108	Former water tower	Closed and sampled, but lead in soil above 600 mg/kg non-residential limit.	Run IEUBK risk model using available results.						If results are acceptable, then no action will be taken; otherwise, team will meet to discuss future action.
114	Quarters A	Lead inspection in 1995. Elevated soil lead concentrations.	Lead inspection to be performed within 12 months of property transfer.						
63	Quarters A barn	No lead inspection performed.							
110	Quarters B	Lead inspection in 1995. Soil sample results OK.							
111	Quarters C	Lead inspection in 1995. Soil sample results OK.							
112	Quarters D	Lead inspection in 1995. Elevated soil lead concentrations.							
113	Quarters E	Lead inspection in 1995. Elevated soil lead concentrations.							
109	Quarters F	Lead inspection in 1995. Soil sample results OK.							
Septic Systems									
164	Building in Marine Compound	Abandoned septic system. Tank and soils sampled for SVOCs in 1997. No detections. Historical activities at bldg. not known.	Subsurface soil samples to determine if release has occurred based on ACT 2 standards.		2	2		VOC, SVOCs	If sample results less than Act 2 standards, then No Action; otherwise, team will meet to discuss future action.
114	Quarters A	Abandoned residential septic system. Tank sludge sampled for SVOCs in 1997. No detections.	No Action						
118	Ground Electronics	Abandoned septic system. Tank and soils sampled for SVOCs in 1997. No detections. Tank encountered by excavation contractor in 2001.	Subsurface soil samples to determine if release has occurred based on ACT 2 standards.		2	2		VOC, SVOCs	If sample results less than Act 2 standards, then No Action; otherwise, team will meet to discuss future action.
Spills									
80S, 80N	Control tower.	Two AFFF spills in 1999 (800 and 400 gal.) on hangar deck and inside hangar. Wait for Navy guidance on AFFF. No evidence that spills contacted soil.	No Action						
680,634	Hangar area	100 gal. AFFF spill in 1998. Possible contact with soil. Anecdotal report of fuel spill on "Apron west."	No Action						
USTs									
78	Civil works	UST No. 20. Properly closed.	No Action						
175	UST 14 (Tank 018)	Confirmation samples less than action levels. Properly closed.	No Action						
ASTs									
181,184	Hangar area	Three diesel ASTs failed tightness tests in 1995. No secondary containment. Tanks have been replaced since HRP inspection. Tanks were non-regulated due to small size and usage.	Visual Inspection						
681	MAG Pump House	200 gal. diesel AST failed tightness test in 1995; tank had secondary containment. UST properly closed. Tank still in use, inside building.	Visual Inspection						
Old Flight Line									
Former Bldg 20 and Old Flight Line	Buildings 22, 29, 70 and former hangar, etc.	Visual evidence of possible UST found. Ed Barnes also investigating. Historical record of "Fuel Farm No. 1" west of building 20 with four aviation fuel USTs. Blueprint dated 1959 shows plans for removal of tanks.	Subsurface soil samples at accessible former tank locations.		4	4		VOCs, SVOCs	If sample results less than Act 2 standards, then No Action; otherwise, team will meet to discuss future action.
15A	Old boiler building	Asbestos inspection performed. ACM in good condition. CERFA notes boiler blow down pipe discharged to ground surface.	Surface soil sample at boiler blow down.	1		1		SVOC, metals	If sample results greater than Act 2 standards, then further study; otherwise, NFA.
15B	Electric sub-station	Asbestos inspection performed. ACM in good condition. PCB transformers removed/replaced. Bill Heil confirmed record of removal/disposal with photos.	NFA.						
21	Paint Shop	Lead found in surface soil in 1995. Sufficient evidence of release.	No sampling						
70	Airfield Light Vault (contains transformers)	Lighting regulator had PCB contamination. Bill Heil confirmed record of removal/disposal with photos.	NFA						
Miscellaneous									
16	Former sludge drying beds	Properly closed.	NFA.						
176,177, 178, 653	Army Reserve vehicle maintenance facility	UST No. 019 (Bldg. 178) removed in 1998. Closure report exists. NFA tentatively planned.	PADEP to follow up on records check.						
188, 129	LOX Storage	ACM in Building 129. To be transferred to Army and demolished.	Sample external friable PACM mentioned in CERFA report.				1	asbestos	
Outside Fence line Maple Ave	Flight approach clear zone; Concrete slab	Aerial photos in 1970's show scattered vehicles and debris on ground surface. File review resulted in no evidence of release found.	No action.						