N00158.AR.000283
NAS WILLOW GROVE
5090.3a

SITE 1 – PRIVET ROAD COMPOUND REMEDIAL INVESTIGATION ADDENDUM 5 GROUNDWATER (OU 3)

CONTINUED GROUNDWATER SOURCE INVESTIGATION

NAVAL AIR STATION JOINT RESERVE BASE WILLOW GROVE, PENNSYLVANIA

Naval Facilities Engineering Command Mid-Atlantic

Contract Number N62472-03-D-0057
Contract Task Order 003

JANUARY 2008

TETRA TECH NUS, INC.

PHIL-21228

SITE 1 – PRIVET ROAD COMPOUND
REMEDIAL INVESTIGATION ADDENDUM 5
GROUNDWATER (OU 3)

CONTINUED GROUNDWATER SOURCE INVESTIGATION

NAVAL AIR STATION JOINT RESERVE BASE
WILLOW GROVE, PENNSYLVANIA

COMPREHENSIVE LONG-TERM
ENVIRONMENTAL ACTION NAVY (CLEAN) CONTRACT

Submitted to:
Naval Facilities Engineering Command Mid-Atlantic
9742 Maryland Avenue
Norfolk, Virginia 23511-3095

Submitted by:
Tetra Tech NUS, Inc.
234 Mall Boulevard, Suite 260
King of Prussia, Pennsylvania 19406

Contract No. N62472-03-D-0057
Contract Task Order 003

JANUARY 2008

PREPARED UNDER DIRECTION OF:

RUSSELL E. TURNER
PROJECT MANAGER
TETRA TECH NUS, INC.
KING OF PRUSSIA, PENNSYLVANIA

APPROVED FOR SUBMISSION BY:

JOHN J. TREPANOWSKI, P.E.
PROGRAM MANAGER
TETRA TECH NUS, INC.
KING OF PRUSSIA, PENNSYLVANIA

TABLE OF CONTENTS

SECTION **PAGE**

1.0 INTRODUCTION 1-1

2.0 GROUNDWATER CONDITIONS 2-1
2.1 OFF-BASE GROUNDWATER CONDITIONS 2-2
2.1.1 Groundwater Flow Direction 2-2
2.1.2 Groundwater Quality 2-2
2.1.3 Off-Base Groundwater Condition Discussion Summary 2-6
2.2 GROUNDWATER QUALITY AT THE BASE PROPERTY BOUNDARY 2-7
2.2.1 Scope of Continued Groundwater Investigation 2-8
2.2.2 Monitoring Well Installation 2-8
2.2.3 Groundwater Sampling and Analysis 2-10
2.2.4 Groundwater Quality at the Base Boundary Discussion 2-11
2.3 GROUNDWATER CONDITIONS IN THE VICINITY OF THE SUPPLY WELLS 2-12
2.3.1 Groundwater Conditions in the Vicinity of Site 1 2-13
2.3.2 Groundwater Conditions in the Vicinity of Supply Well No. 1 2-14
2.3.3 Groundwater Conditions in the Vicinity of the Navy Fuel Farm 2-17
2.4 OTHER POTENTIAL SOURCE AREAS IN THE VICINITY OF THE SUPPLY WELLS. 2-18
3.0 SUMMARY OF CONCLUSIONS 3-1

REFERENCES R-1

APPENDICES

A REGIONAL POTENTIOMETRIC SURFACE (USGS, 2001)
B ANALYSIS OF KELLETT AIRCRAFT WASTE HOLDING TANK (NUS, 1988)
C ANALYSIS OF WELL - PRIVATE RESIDENCE (PADEP FILE DATA)
D ANALYSIS OF WELL - COMMERCIAL ESTABLISHMENT (PADEP FILE DATA)
E BORING LOGS FOR MONITORING WELLS 01MW09 AND 01MW10.
F ANALYSIS OF PACKER TESTS FOR WELLS 01MW09 AND 01MW10
G WELL CONSTRUCTION DIAGRAMS FOR WELLS 01MW09 AND 01MW10
H SURVEY DATA FOR WELLS 01MW09 AND 01MW10
I ANALYTICAL DATA (VALIDATED) FOR WELLS 01MW09 AND 01MW10

TABLES

NUMBER

1 Monitoring Well Construction Details
2 Groundwater Analytical Results Summary
3 USGS Packer Test Analytical Results of Navy Supply Wells

FIGURES

NUMBER

1 Groundwater Conditions in the Vicinity of Site 1 - Privet Road Compound
2 Distribution of TCE in the Unconfined Aquifer in the Vicinity of Site 1
3 Distribution of TCE in the Semiconfined Aquifer in the Vicinity of Site 1
4 Distribution of PCE in the Unconfined Aquifer in the Vicinity of Site 1
5 Distribution of PCE in the Semiconfined Aquifer in the Vicinity of Site 1

1.0 INTRODUCTION

The Navy has performed multiple phases of remedial investigation (RI) and additional post-remedial investigation of the groundwater at Site 1 (the former Privet Road Compound) at the Naval Air Station Joint Reserve Base (NAS JRB) Willow Grove, Pennsylvania. The results of these investigations have been presented in several documents, including the final Remedial Investigation Report for Site 1 - Privet Road Compound (Tetra Tech NUS, July 2002), the Site 1 Remedial Investigation Addendum Two (2) - Groundwater Human Health Risk Assessment Technical Memorandum (Tetra Tech NUS, August 2005), and the Site 1 Remedial Investigation Addendum Three (3) for Groundwater (Tech NUS, September 2005).

One objective of the remedial investigation addenda process was to obtain additional data to support the conclusion, presented in the RI, that Site 1 is not the source of the volatile organic compounds (VOCs) that are detected in the Navy's potable supply wells. The purpose of this RI addendum report is to consolidate data, interpretations, and discussions from the previous remedial investigation reports referenced to demonstrate that VOCs are migrating onto the Base from an upgradient, off-Base source area.

2.0 GROUNDWATER CONDITIONS

The RI for Site 1 delineated coalescing groundwater plumes that are either migrating through the site under natural (ambient) conditions or are drawn to the site by the pumping of the two deep and high-yielding Navy potable water wells. The RI report concluded that Site 1 is not the major source of the VOCs detected in the Site 1 area groundwater (including the potable supply wells), but noted that the difficulty and uncertainty in delineating the individual extents of the multiple plumes and their sources was compounded by the complex hydrogeology, which is characterized by the presence of multiple (unconfined and semi-confined) aquifers that respond differently to the daily pumping and cycling (alternating between both wells "on" or both wells "off" multiple times per day) of the supply wells. The transition zone between the unconfined and semi-confined portions of the aquifer occur between the subsurface depths of about 40 to 70 feet.

The RI report concluded that an off-site source (possibly in the vicinity of the former Kellett Aircraft Facility) appears to be the most significant source of the VOCs in the vicinity of Site 1 and in the Navy potable supply wells, but the RI also delineated three potential on-Base, lesser sources of VOCs, including:

- A potential source of PCE and TCE in the vicinity of Supply Well No. 1 or the Public Works Building.
- A possible minor source of PCE at the Privet Road Compound.
- A potential minor source of TCE southwest of the compound, in the vicinity of, or upgradient from, the Navy Fuel Farm.

Confirmation of the presence of off-Base contamination migrating onto NAS JRB Willow Grove (and into the supply wells) was constrained by the lack of groundwater analytical data at the Base property line. Additional data was needed to document the quality of the groundwater as it flows onto the property at a location upgradient from the supply wells. The delineation or identification of the potential lesser, on-Base sources was constrained to varying degrees by the absence of monitoring wells at some locations, or, if wells were present, by the absence of well clusters to simultaneously monitor the unconfined and confined portions of the aquifer. Subsequent to the completion of the final RI report in 2002, the Navy installed additional monitoring wells to address all of these data gaps. The results from these additional wells, installed and sampled after the 2002 RI report was distributed, form the basis of this report.

2.1 OFF-BASE GROUNDWATER CONDITIONS

The off-Base groundwater conditions, including groundwater quality and groundwater flow directions, are summarized and illustrated in Figure 1, and discussed in the following sections.

2.1.1 Groundwater Flow Direction

The regional groundwater flow patterns in the vicinity of the NAS JRB Willow Grove were interpreted by the USGS through a cooperative investigation with the Navy. The USGS interpretation used groundwater elevations obtained from both on-Base monitoring wells and accessible off-Base wells located within the surrounding neighborhoods (USGS 2001, Open-File Report 01-149). The groundwater elevation contours in the vicinity of Site 1 are included on Figure 1, and the complete map is included in Appendix A.

The USGS report indicates that the regional direction of groundwater flow is dominantly to the northwest, which is the same site-specific direction previously interpreted for Site 1 (Tetra Tech NUS, July 2002). The USGS interpretation also indicates that in the off-Base area immediately east of Site 1, there is the potential for a local component of northward to northeastward flow, reflecting the local topography of an intermittent stream (in its uppermost reaches) to perennial stream.

2.1.2 Groundwater Quality

Information regarding the off-Base groundwater quality in the locations upgradient of Site 1 and the Navy supply wells (in the general vicinity along Route 611) was documented and discussed in detail in the RI report (Tetra Tech NUS, July 2002). These results are also illustrated in Figure 1, and are summarized in the following discussions.

2.1.2.1 Former Kellett Aircraft Corporation Facility

The former Kellett Aircraft Corporation facility has been the subject of multiple environmental investigations. EPA completed both a Preliminary Assessment (USEPA, 1987) and a Site Inspection (USEPA, 1988) for the property. In addition, PADEP has monitored the facility and conducted limited field investigation, including the sampling and analysis of neighboring potable wells (PADEP project files).

As part of their SI, EPA sampled the facility's liquid waste holding tank. These results (which are included in Appendix B) document that the VOCs that were present on site and used in the manufacturing process

at the time of sampling included trichloroethene (TCE), tetrachloroethene (PCE), 1,2-dichloroethane (1,2-DCA), chloroform, and 1,1,1-trichloroethane (1,1,1-TCA).

EPA also conducted limited sampling of the site's soil and surface water during the SI. No groundwater samples were obtained. The results of the media sampling indicated that the site's surface water was contaminated with TCE, PCE, and 1,1,1-TCA. These aqueous samples were obtained from a drainage swale that received the former Kellett process discharge and an intermittent tributary located downgradient of the Kellett building (see Figure 1). The drainage swale and tributary flow into another, larger unnamed tributary that originates on NAS JRB Willow Grove property. A surface water sample obtained from the larger tributary at a location downstream of NAS JRB Willow Grove, but upstream of the discharge contribution from the Kellett facility, contained only one VOC (carbon disulfide at 1 ug/L), indicating that neither the TCE, PCE, nor 1,1,1-TCA originates on NAS JRB Willow Grove property.

2.1.2.2 Private Residence

A private residence located north of the former Kellett facility is served by a well that is equipped with a water treatment system. The construction details of the residential well are not known, but based on the advanced age of the house, the well is likely shallow (possibly less than 100 feet), or is almost certainly open through that interval. Although the resident declined to participate in the EPA investigations, they did allow PADEP to sample their well. The results from two sampling events (obtained from the PADEP project files) are summarized in Figure 1 and included in Appendix C. The two results are markedly different and apparently contradictory, and range from very high concentrations of VOCs in 1996 (including PCE at 1,800E ug/L and TCE at 69 ug/L) to essentially no detections in 2003 (only PCE at 0.5 ug/L). It is unlikely that both analytical results represent valid samples of untreated groundwater, because it is unlikely that the groundwater quality could be restored within that timeframe in the absence of a major remedial effort. It is hypothesized that the 1996 event represents actual groundwater conditions and that the 2003 event may have inadvertently sampled treated groundwater. Additional testing of this well would be required to test this hypothesis.

Based on the interpreted directions of groundwater flow, the results of the 1996 sampling event indicate that the groundwater directly downgradient of the former Kellett facility is significantly contaminated with the same VOCs that were documented as present and used within the Kellett facility, and that occur within the surface waters of that facility. These results document that the off-Base groundwater upgradient of NAS JRB Willow Grove is significantly contaminated with the same VOCs that are detected in the Navy supply wells.

2.1.2.3 Commercial Establishment

A commercial establishment located south of the former Kellett facility was sampled by PADEP in 1997. The analytical results were obtained from the PADEP project files and are included in Appendix D. These results indicate that the groundwater immediately upgradient of the Kellett facility contains the same suite of VOCs that are detected downgradient of the facility (in the residential well), although at much lower concentrations. Records from the PADEP site sampling event mention a carbon filter and water softener, but do not indicate if the water sample was obtained from untreated groundwater. The construction details of the commercial establishment well are not known, but as discussed in the RI (Tetra Tech NUS, July 2002), the well only serves the one establishment so it is likely to be constructed in a manner similar to a typical residential well and as such, it is unlikely to be cased entirely through the unconfined interval of the aquifer (typically, residential wells are cased into the top of competent rock, which generally occurs at a depth of about 20 feet in this area).

Analytical results from the commercial establishment well further document the presence of VOCs in the groundwater upgradient of NAS JRB Willow Grove, although the source(s) of these VOCs is not known. Although the VOCs detected in this well are the same as those used in the former Kellett facility (or are breakdown products of those compounds), this well is located upgradient of the Kellett property, and it is uncertain if the capture zone of this well could be that extensive. The presence of VOCs in the commercial establishment well could be indicative of multiple off-Base VOC sources in the general area located east of Route 611.

2.1.2.4 Public Supply Well

The Horsham Township Municipal Authority (HTMA) Well No. 10 is located approximately 3,600 feet southeast (upgradient) of Site 1. According to the HTMA, this well is 271 feet deep and has surface casing set to a depth of 50 feet. Historical analytical results from this well were obtained from the HTMA for the RI and discussed in that report (Tetra Tech NUS, July 2002). Low concentrations of TCE and 1,1,1-TCA were detected fairly frequently, but inconsistently, and included detections of 0.2 ug/L for both compounds for the most recent analysis that was available at that time (October 2001). A review of the historical (post-1996) data indicated that although the data were incomplete, the concentrations reported for October 2001 were fairly typical for the well when VOCs were detected, although no detections were reported for many sampling events.

The detections of VOCs in the nearby commercial establishment well and the absence (or very limited) detections of VOCs in the public supply well (which are approximately 1,600 feet apart) indirectly support the existence of an off-Base VOC source in the vicinity of these wells. The casing depth of the public

supply well would effectively case off the shallow groundwater of the unconfined zone and place the open portion of the borehole within the semiconfined zone. As discussed, it is unlikely that the surface casing of the commercial establishment well is set deep enough to entirely case off the groundwater of the unconfined zone, which would allow groundwater from that interval to enter the well. Although circumstantial, the absence of VOCs in a well known to be cased off from the shallow groundwater and the presence of VOCs in a well that is probably not cased off from the shallow groundwater appears to be indicative of a shallow source of groundwater contamination in the vicinity of the wells.

2.1.2.5 Tinius Olsen Property / Retail Gasoline Station / MTBE Plume

The Tinius Olsen metal working (manufacturing) facility and the retail gasoline station are located approximately 4,000 feet and 5,000 feet southeast (upgradient) of Site 1, respectively. In 1997, the Navy installed four shallow monitoring wells around the Tinius Olsen property (which lies along the west side of Route 611 and immediately adjacent to NAS JRB Willow Grove) due to the detection of the gasoline component methyl tert butyl ether (MTBE) in the Tinius Olsen supply well (Brown & Root Environmental, September 1997). Based on the site-specific determination of groundwater flow to the northwest (consistent with the subsequent USGS investigation), the report concluded that the contamination did not originate on Navy property and that the retail gasoline station (which had a documented gasoline release) was a possible source. Relative to the Site 1 investigation, chlorinated solvents were not common in the wells (one well contained 12 ug/L of carbon tetrachloride, but no wells contained TCE or PCE), indicating that neither of these properties is a potential source of the contamination detected in the NAS JRB Willow Grove supply wells.

Also, relative to the USGS interpretation of groundwater flow, these shallow monitoring wells are located along the Navy property boundary in an area where a potential north to northeastward component of groundwater flow from the Navy property to the off-Base properties (and generally toward the former Kellett facility) could be inferred. The absence of site-related VOCs in these wells indicates that this portion of NAS JRB Willow Grove is not the source of the off-Base groundwater contamination.

2.1.2.6 Willow Grove Air Reserve Station (ARS)

The ARS is a Department of Defense (DOD) Air Force facility that is contiguous with the NAS JRB and lies within the installation's fenced boundaries. Although EPA provides regulatory oversight to the ARS and the NAS JRB as a common Superfund site, these activities are operated by different defense services, Air Force and Navy, respectively. The ARS is not part of the NAS JRB, and is therefore considered to be off-Base relative to the Navy's property.

The ARS Site SD-4 (Aircraft Wash Rack/Trickling Filter Site) lies several hundred feet west of the Privet Road Compound (Figure 1). Unlike the Privet Road Compound Site where no historic investigation detected Target Compound List (TCL) VOCs contamination in subsurface soils, an ESI at ARS SD-4 detected PCE at 1 mg/kg in a subsurface soil sample. PCE and its breakdown product TCE have historically been detected in the monitoring wells at Site SD-4. The ground water extent of contamination at the ARS Site SD-4 and the impact to the Navy Supply wells from this source are unknown, at this time. Therefore, ARS SD-4 cannot be eliminated as a present or historic off-Base contributor of ground water contamination to the underlying aquifer.

2.1.3 Off-Base Groundwater Condition Discussion Summary

The off-Base groundwater located south and east of NAS JRB Willow Grove is significantly impacted by the same VOCs that are detected on the Navy property, at Site 1 and in the two Navy potable supply wells. The results of investigations conducted by EPA and PADEP at the off-Base locations indicate that there is at least one potential source (the former Kellett aircraft facility) of the VOC contamination in the immediate vicinity of the off-Base impacted groundwater, although this facility has not been confirmed as a source, and it is possible that other off-Base sources of contamination may exist. Planned future investigation by EPA at the Kellett facility may provide additional information regarding the specific source(s) of the off-Base groundwater contamination.

The results of groundwater flow studies conducted specifically for Site 1 (by the Navy) and for the region (by the USGS) indicate that the impacted off-Base groundwater (in the vicinity of the former Kellett facility) is located hydraulically upgradient of NAS JRB Willow Grove, and that the general direction of groundwater flow is from this off-Base area towards the Base. These observations confirm the potential for the source of the groundwater contamination at Site 1 and in the supply wells to be an off-Base location.

The surface water contamination at the former Kellett facility indicates that TCE, PCE, and 1,1,1-TCA (which have been documented as having been used at the facility) were apparently released there to the environment. PCE is the dominant contaminant at both Kellett and within the Navy supply wells. The Kellett facility sits on or very near the outcrop area of the most highly contaminated lithologic unit (Unit “H”) beneath the Privet Road Site (Figure 1). In their initial report (USGS 2001), the USGS also noted that the fractures associated with Lithologic Unit H formed one of the more pervasive fracture sets (in terms of interconnectedness and continuity) beneath the Privet Road Site and in the two supply well boreholes. Michalski and Britton (Ground Water, Vol 35, No. 2, 1997) point out that within the Triassic Basin, updip extensions of the major bedding fractures into the weathered zone provide dominant pathways for downdip drainage across the weathered zone. Thus, a plausible conceptual model would

include the introduction of the TCE, PCE, and 1,1,1-TCA into the aquifer near the Kellett facility, the downdip (and downgradient) migration of the contaminants within the bedding plane fractures, and the subsequent capture of these contaminants by the Navy supply wells. This model also explains why the VOCs detected in the vicinity of Site 1 occur dominantly within the semiconfined zone as opposed to the shallower unconfined zone, where they would be expected if these wells were located in the proximity of the contamination source.

Regulators have questioned whether the off-Base contamination could be the result of a groundwater plume originating at, and migrating from NAS JRB Willow Grove property to off-Base locations; because the USGS interpretation of groundwater flow indicates a local north to northeastward component of flow in the vicinity of the former Kellett facility (see Figure 1). The Navy monitoring wells installed around the Tinius-Olsen property are located in a position that is generally upgradient of the former Kellett facility, based on topography and the USGS interpretation of local groundwater flow direction. The groundwater analytical results from these wells do not contain chlorinated VOCs, indicating that the contamination detected in the vicinity of the former Kellett property does not originate on the NAS JRB Willow Grove property.

2.2 GROUNDWATER QUALITY AT THE BASE PROPERTY BOUNDARY

Subsequent to the submittal of the RI report for Site 1, the regulatory community expressed the opinion that the lack of groundwater information at the NAS JRB Willow Grove property boundary along Easton Road was a key data gap in the technical discussions linking the off-Base groundwater conditions to the on-Base impacts to the Navy supply wells. As a result, the Navy contracted with ECOR Solutions (ECOR) to perform field work and data collection in accordance with the approved Work Plan for Groundwater Investigation, summer 2005 Continued Groundwater Source Investigation, Site 1 - Groundwater (OU 3) (Tetra Tech NUS, September 2005).

The purpose of this investigation was to acquire the additional data needed to support the hypothesis that the volatile organic compounds (VOCs) detected in the Navy supply wells are emanating from an off-Base source. Three new monitoring wells were installed at two locations adjacent to the NAS JRB Willow Grove boundary along Easton Road (Figure 1). These wells, which are located geologically updip and hydraulically upgradient from Site 1, were installed to determine the quality of the local groundwater that is migrating onto NAS JRB Willow Grove from upgradient, off-Base locations.

2.2.1 Scope Continued Groundwater Investigation

The following field investigation tasks were completed to measure the quality of groundwater migrating onto NAS JRB Willow Grove property from upgradient, off-Base locations.

- Monitoring Well Installation Three new monitoring wells were installed at two locations (see Figure 1). One of the wells (01MW09S) was installed at a location in a direct line between the former Kellett facility and the Navy supply wells. Two of the wells (01MW10S and 01MW10D) were installed at a location geologically downdip of the former Kellett facility and generally along bedrock strike from the Navy supply wells.

- Groundwater Sampling and Analysis The new monitoring wells were sampled for VOCs. Before permanent monitoring well construction within the borehole, groundwater samples were obtained from multiple horizons at each location by performing packer tests within the open borehole. Samples were also obtained from the permanent monitoring wells that were subsequently installed within the boreholes.

2.2.2 Monitoring Well Installation

The locations of the new monitoring wells are illustrated on Figure 1. The rationale for each location relative to the site conceptual model and to the identified data gaps is discussed briefly in Section 2.2.1 and in detail in the work plan (TtNUS, September 2005). Construction details for each well are summarized in Appendix G.

2.2.2.1 Borehole Drilling

The drilling subcontractor was Eichelbergers, Inc., of Mechanicsburg, Pennsylvania. The monitoring well boreholes were drilled by the air percussion drilling method. At each location, an 8-inch I.D. steel casing was grouted into a 12-inch borehole that was drilled to a depth of 30 feet, or approximately 20 feet below the overburden/bedrock interface. At each location, a nominal 8-inch diameter borehole was drilled out of the casing to the total depth of the borehole, 150 feet for 01MW09 and 350 feet for 01MW10.

The boreholes were logged by an ECOR geologist. The geologist also monitored the borehole for organic vapors with a photoionization detector (PID). The boring logs are included in Appendix E.

2.2.2.2 Geophysical Borehole Logging

Geophysical logs of the open-bedrock boreholes were obtained by the United States Geological Survey (USGS) under their interagency agreement with the Navy. The boreholes were logged a minimum of 2 days after their drilling completion to allow the borehole parameters to return to ambient conditions. The borehole logs generated by the USGS included the following:

- Caliper
- Natural gamma
- Single point resistance
- Fluid temperature
- Fluid conductivity
- Fluid velocity by heat pulse flowmeter
- Borehole television
- Digital acoustic televiewer

Copies of the logs and documentation of the borehole logging program are provided in a report published by the USGS (USGS, 2007).

2.2.2.3 Aquifer-Isolation (Packer) Testing

The boring logs generated by ECOR and the geophysical logs generated by the USGS were reviewed by the Navy, EPA, ECOR, TtNUS, and the USGS. For each borehole, several vertical intervals were identified as potential screen zones for permanent monitoring wells to be built in the boreholes. Because selection of the zone to be screened was not unequivocal, packer testing of the potential zones was performed to determine VOC concentrations of those zones. Laboratory analytical results from the packer tests are included in Appendix F (these results did not receive validation). The documentation of the aquifer isolation tests is provided in a report published by the USGS (USGS, 2007). The analytical results for PCE are also illustrated on the hydrogeologic cross-section presented as an inset to Figure 1.

The packer tests were performed by the USGS. Inflatable straddle packers were used to isolate the water-bearing zones of interest, and a submersible pump was used to obtain groundwater samples from these zones. ECOR collected groundwater samples and submitted them via overnight air courier to a Navy-approved laboratory for low-concentration VOC analyses on a quick-turnaround (48-hour) schedule. Groundwater samples were analyzed fro VOCs by laboratory analytical method SW-846 Method 8260B. Analytical data from the packer samples was used for field screening purposes to guide permanent monitoring well construction details only, and therefore was not validated.

In addition to obtaining groundwater samples, the USGS investigated the hydraulic connection between the pumped interval and other stratigraphic intervals in both the newly installed monitoring wells and adjacent wells by installing pressure transducers and monitoring water level changes induced by pumping. During this investigation, the USGS noted that water levels in 01MW09 were somewhat influenced by the pumping of the Navy supply wells and that water levels in 01MW10 were strongly influenced by the pumping of the Navy supply wells, confirming the frequently-noted observation of enhanced drawdown along bedrock strike within the Stockton Formation and establishing that the zone of influence of the supply wells extends at least to the vicinity of 01MW10.

2.2.2.4 Monitoring Well Installation and Development

The boreholes were fitted with screened monitoring wells constructed to monitor groundwater from a specific vertical interval. The interval to be monitored in each monitoring well was generally based upon the approximate depth where hydrogeological and chemical data were needed to fill the data gaps at that location, and was based upon the evaluation criteria discussed above, including the boring logs, geophysical logs, and packer test results. Well construction details for the three new monitoring wells are summarized in Table 1. Well construction diagrams are included in Appendix G.

The monitoring wells were constructed with 2-inch-diameter (at 01MW10) or 4-inch-diameter (at 01MW09), flush-joint and threaded PVC well casing and corresponding 2-inch or 4-inch-diameter, Schedule 40, 0.020-inch slotted well screen fitted with a bottom cap. At location 01MW09, a single well was installed within the borehole, and at location 01MW10, two wells were installed within the borehole. At each location, the bottom of the well screen was installed above the bottom of the borehole. The interval between the bottom of the monitoring well screen and the bottom of the borehole was backfilled with bentonite at 01MW09 and with gravel at 01MW10, because the interval to be sealed at the latter location was short and no significant water-bearing zones were identified within that interval. The annular space between the well screens and the boreholes was packed with No. 2 quartz sand to a height of 5 feet above the top of the screens and a bentonite seal with a thickness of 5 feet was emplaced above the sand pack. The remainder of the annular space from the bentonite seal to the ground surface was grouted with a 5 percent bentonite/cement grout. The monitoring wells were subsequently developed with a submersible pump. Reference elevations were established by James M. Stewart, Inc., a Pennsylvania-licensed surveyor. The survey data is included in Appendix H.

2.2.3 Groundwater Sampling and Analysis

The three new monitoring wells were sampled for low-concentration TCL VOCs. The analytical data are summarized in Table 2. The complete set of validated analytical data is presented in Appendix I.

Low-concentration TCL VOC analyses were performed by SW-846 Method 8260B. A Practical Quantitation Limit (PQL) of 1 ug/L was achieved for most compounds. Samples from all monitoring wells were also analyzed in the field for the following parameters.

- Dissolved oxygen (meter)
- pH
- temperature
- conductivity (meter)

Groundwater samples were obtained by the low-flow purging and sampling method following EPA Region 3 guidelines (Bulletin QAD023 - June 16, 1999). The new monitoring wells were sampled a minimum of 2 weeks after their development.

2.2.4 Groundwater Quality at the Base Boundary Discussion

Analytical results from the new monitoring well locations installed along the fence line (see Figure 1) confirm the presence of VOCs in the groundwater at the NAS JRB Willow Grove property boundary. Based on the site-specific groundwater flow directions interpreted by the Navy for Site 1 and the regional groundwater flow directions interpreted by the USGS, the new wells are at a location that is hydraulically upgradient of Site 1 and the Base potable water supply wells, and hydraulically downgradient from the identified area of off-Base VOC groundwater contamination (Section 2.1). These results confirm that contaminated groundwater originating at an off-Base location is migrating onto the NAS JRB Willow Grove property along the eastern boundary of the Base.

Monitoring well 01MW09 was installed at a location between the Navy supply wells and the off-Base former Kellett facility. Based on the overall regional groundwater flow direction to the northwest, this well is located almost directly downgradient of the Kellett facility, and directly upgradient of the Navy supply wells. The analytical results from 01MW09, however, indicate that the groundwater at this location is not highly contaminated (see Cross-Section Inset, Figure 1). These results are interpreted to indicate that the local groundwater east of the Base and in the vicinity of the Kellett facility flows in a more northward direction in response to the local topography (as indicated by the intermittent-to-perennial stream valley, and as interpreted by the USGS). This northward direction of groundwater flow places 01MW09 along the western fringe of the off-Base plume (in agreement with the low VOC concentrations detected in this well), and places the off-Base residential well (Section 2.1.2.2) nearly directly downgradient of the former Kellett facility (in agreement with the high VOC concentrations detected in this residential well). Together, the regional groundwater flow interpretation and the analytical results from these wells indicate that an

off-Base groundwater plume originating somewhere in the vicinity of the former Kellett facility flows in a generally northward direction.

Monitoring well cluster 01MW10 was installed at a location downgradient of the former Kellett facility, and along the bedrock strike of the Navy supply wells. The water level in the 01MW10 borehole was strongly influenced by the pumping of the Navy supply wells (approximately 4.7 feet of hydraulic head per pumping cycle), which reflects the characteristic enhanced drawdown along bedrock strike that is typical for the Stockton Formation, and which places the 01MW10 location within the zone of influence of the pumping wells. Although there are insufficient hydraulic head data along Rte. 611 to define the actual capture zone of the wells, the magnitude of the head fluctuations within the zone of influence and the similarity of the chemical signature (VOC concentrations) between 01MW10 and Supply Well No. 1 strongly suggest that the VOCs detected in the Navy supply wells are attributable to the off-Base plume that is migrating under ambient conditions to the vicinity of 01MW10, where the plume is captured by, and drawn into, the Navy supply wells. The generally similar vertical distribution and concentrations of VOCs in 01MW10 and Navy Supply Well No. 1 are consistent with this interpretation. The VOC concentrations in Supply Well No. 2 are historically lower than Well No. 1, but Well No. 2 is a much less efficient well (as determined by specific capacities).

In conclusion, the available hydrogeological and chemical data for the off-Base areas located adjacent to the NAS JRB Willow Grove, and the delineation of the Base's boundary conditions (located between the off-Base areas and the Navy's supply wells), are consistent with the existence of a VOC plume that emanates from an off-Base source (possibly from multiple sources) somewhere in the vicinity of the former Kellett facility, and flows in a generally northward direction under ambient conditions until the plume is captured by the Navy supply wells, and drawn along strike into the wells.

2.3 GROUNDWATER CONDITIONS IN THE VICINITY OF THE SUPPLY WELLS

The RI report (Tetra Tech NUS, July 2002) concluded that the nature and three-dimensional extent of TCE and PCE in the vicinity of Site 1 and the Navy supply wells is extremely complex, and that possibly two PCE plumes and four TCE plumes coalesce (at least laterally, if not vertically) in this area. Based on the convergence of multiple lines of evidence, the report concluded that an off-Base source was the most significant source of the VOCs detected in the Navy supply wells (this interpretation is summarized in Sections 2.1 and 2.2 of this report). Based on the site conceptual model (including the nature and extent of the VOCs and the groundwater flow characteristics relative to the unconfined and semiconfined portions of the aquifer) the report also postulated three potential on-Base, lesser sources of VOCs that could not be the primary source of the VOCs in the supply wells, but might still be impacting the wells to a lesser extent. These potential sources included:

- A possible minor source of PCE at the Privet Road Compound (Site 1).

- A potential source of PCE and TCE in the vicinity of Supply Well No. 1 or the Public Works Building.

- A potential minor source of TCE southwest of the compound, in the vicinity of, or upgradient from, the Navy Fuel Farm.

In the 2002 RI report, the identification of these potential lesser, on-Base sources was constrained to varying degrees by the absence of monitoring wells at some locations, or, if wells were present, by the absence of well clusters to simultaneously monitor the unconfined and semiconfined portions of the aquifer. Subsequent to the completion of the 2002 RI report, the Navy installed additional monitoring wells to address these data gaps. The results from the additional wells (combined with the previously existing data) are summarized in the following discussion, and are presented and discussed in much more detail in the Remedial Investigation Addendum 3 for Site 1 Groundwater - Privet Road Compound (Tetra Tech NUS, September 2005).

The monitoring wells existing in the vicinity of Site 1 and the Navy supply wells are illustrated in Figure 1, and their analytical results for TCE and PCE in the unconfined and semiconfined portions of the aquifer are illustrated in Figure 2 through Figure 5. The analytical results from interval packer (isolation) tests conducted in the Navy supply wells is summarized in Table 3, and the PCE results from these packer tests are illustrated on the hydrogeologic cross-section (Inset on Figure 1).

2.3.1 Groundwater Conditions in the Vicinity of Site 1

As discussed in detail in the RI report (Tetra Tech NUS, July 2002), the lateral extent and vertical distribution of TCE and PCE at Site 1 (relative to their concentrations upgradient and downgradient of the site, and their concentrations in the unconfined versus the semiconfined portions of the aquifer) indicate that the primary source of VOCs in the Site 1 monitoring wells is not located in the immediate vicinity of the former Privet Road Compound, but must be at some unknown, upgradient location.

Site 1 may be a minor source of PCE because of the detections of PCE in monitoring wells located downgradient of the northwestern corner of the site at concentrations ranging from 4 - 6 ug/L in the unconfined zone (Figure 4) to 5-11 ug/L in the semiconfined zone (Figure 5). The absence of PCE in the Site 1 soils, the absence of PCE in other downgradient monitoring wells, and the absence of PCE in the monitoring wells located between Site 1 and the supply wells, however, indicate that the site is not a substantial source of PCE to the groundwater, and that this groundwater is not the primary source (or not a source at all) of the PCE detected in the supply wells.

2.3.2 Groundwater Conditions in the Vicinity of Supply Well No. 1

The 2002 RI report concluded that a minor source of TCE and PCE might exist in the general vicinity of Supply Well No. 1 and the Public Works Building (Bldg. No. 78). As a result, the Navy subsequently installed a well cluster to monitor the unconfined (10MW27) and semiconfined (10MW28) portions of the aquifer at this location.

2.3.2.1 TCE

TCE was detected at a maximum concentration of 0.2J ug/L in the unconfined zone (10MW27), indicating that a very minor source of TCE exists in this area (Figure 2). TCE was detected at a concentration of 2 ug/L in the semiconfined zone (10MW28) (Figure 3). The higher concentrations of TCE in the semiconfined aquifer versus the unconfined aquifer supports the conclusion that the source of the TCE is not in the immediate vicinity of the monitoring wells, but must be at some hydraulically upgradient location.

Although the higher concentration of TCE in the semiconfined aquifer (10MW28) versus the unconfined aquifer (10MW27) overall are consistent with the site conceptual model, the presence of TCE in 10MW28 (screened from 98 - 108 feet) and its absence in Supply Well No. 1 within the packered intervals of similar depth (79 - 85 feet, 106 feet, and 124 - 152 feet) represents an apparent inconsistency in this compound's distribution. Former monitoring well MW-1 (a former monitoring well that was reportedly damaged by construction and apparently covered by a building foundation or asphalt paving) was located near (approximately 200 feet northeast) of 10MW28. This well was cased to a depth of 40 feet, and was an open borehole between the depths of 40 - 200 feet. An historical (1984) groundwater sample from MW-1 contained TCE at a concentration of 2.3 ug/L, which is similar to the concentrations detected in 10MW28 (2 ug/L) and in the fracture within Supply Well No. 1 located at a depth of 182 feet (2.4 ug/L). The RI concluded that under non-pumping conditions, the vertical hydraulic gradient in this area is oriented upward, indicating the tendency for groundwater (in the absence of a confining layer) to flow upward from the confined interval to the unconfined interval and potentially redistribute the deeper contamination into the shallower horizons. The circumstantial evidence discussed above indicates that this vertical flow may account for the presence of the shallow groundwater contamination detected in the vicinity of these wells. The Navy has tried to locate the former well MW-1 (using historical site drawings and a magnetometer), but without success. If the former monitoring well MW-1 is the cause of the low levels of TCE detected in this area, there is no way to confirm that relationship now.

2.3.2.2 PCE

PCE was not detected in the unconfined zone (10MW27) (Figure 4), and was detected at a maximum concentration of 5 ug/L in the semiconfined zone (10MW28) (Figure 5). The non-detection of the PCE in the shallow groundwater and the detection of PCE in the semiconfined aquifer at the same location support the conclusion that the source of the PCE is not in this immediate area. If the source was in this area (or just upgradient of this area), then PCE would have been expected in the unconfined aquifer. The absence of PCE in the unconfined aquifer and the presence of PCE in the semiconfined aquifer indicates that the primary source of the PCE contamination in this area must be located hydraulically upgradient and at a sufficient distance to allow the PCE to migrate to the depths where it is detected within the semiconfined aquifer.

The PCE concentration in the semiconfined zone is consistent with the PCE concentrations (ranging from 1.7J - 6.2J ug/L) that were detected in the shallower packer test intervals (between the depths of 52 - 152 feet) in the adjacent Supply Well No. 1 (see Figure 1 and Table 3). The RI report had tentatively attributed these shallower PCE detections in the supply well to groundwater impacts within the unconfined zone, but also concluded that based on the depths of the packered intervals and the conceptual site model, most of these zones were potentially in the semiconfined portion of the aquifer. The analytical data from the 10MW27/28 well cluster (see Figure 2 through Figure 5) indicate that the shallower packered intervals within Supply Well No. 1 are within the semiconfined portion of the aquifer, and that the VOCs detected in this zone are attributable to a hydraulically upgradient source.

2.3.2.3 cis-1,2-Dichloroethene (cis-1,2-DCE)

Cis-1,2-DCE was not detected in the unconfined zone (10MW27), and was detected in the semiconfined aquifer (10MW28) at a low concentration of 0.2J ug/L. Cis-1,2-DCE generally occurs as a dechlorination (breakdown) product of TCE, and typically has a similar extent or occurrence pattern as the parent compound. In the Supply Well No. 1 packer tests, cis-1,2-DCE was detected at concentrations ranging from 1.0J - 4.7J ug/L in the four zones ranging between the depths of 182 - 354 that also contained detections of TCE (Table 3). Similarly, cis-1,2-DCE was not detected in the four shallower zones (ranging between the depths of 52 - 152 feet) where TCE was not detected. Within the other Site 1 monitoring wells, cis-1,2-DCE was only reported from 05MW07I, which is also the monitoring well that is most heavily impacted by TCE. At the new monitoring well cluster 10MW27/ 10MW28, the absence of cis-1,2-DCE in the unconfined aquifer and its occurrence at a very low concentration in the confined aquifer are consistent and proportional to the concentrations of TCE reported from these wells, and similarly indicate that there is not a significant source of TCE (or cis-1,2-DCE) in the immediate vicinity of these monitoring wells.

2.3.2.4 1,1,1-Trichloroethane (1,1,1-TCA)

1,1,1-TCA was detected in both the unconfined (10MW27) and semiconfined (10MW28) zones, but the concentrations in the unconfined aquifer are greater by approximately one order of magnitude. The concentrations of 1,1,1-TCA in the unconfined zone range between 3 - 6 ug/L, and the concentrations in the semiconfined zone range between 0.5J - 0.9J ug/L.

For the Supply Well No. 1 packer tests, 1,1,1-TCA was detected at concentrations ranging between 1.5J and 2.6 ug/L in four of the five zones tested between the subsurface depths of 52 - 182 feet, but it was not detected in the three deeper zones tested between the subsurface depths of 241 - 354 feet (Table 3). For the Supply Well No. 2 packer tests, 1,1,1-TCA was not detected in any of the five zones tested between the subsurface depths of 68 - 314 feet. At Site 1, the only two historical detections of 1,1,1-TCA were at 01MW01S (1J ug/L in 1991 but not detected in 1997), and at 01MW06I (3J ug/L in 1991 but ND in 1997).

The observations that the highest concentrations of 1,1,1-TCA are detected in the shallower (unconfined) portions of the aquifer, and that the detections (except for the two low detections in 1991) are restricted to the immediate vicinity of Supply Well No. 1, are apparently indicative of a minor source of 1,1,1-TCA in the general vicinity (or just upgradient) of 10MW27. This VOC, however, has also been detected upgradient and off-Base at the former Kellett facility (Section 2.1.2.1) and in the adjacent residential well (Section 2.1.2.2).

2.3.2.5 1,1-Dichloroethene (1,1-DCE)

1,1-DCE was detected in both the unconfined (10MW27) and semiconfined (10MW28) zones, but the concentrations in the unconfined aquifer are greater by approximately one order of magnitude. The concentrations of 1,1-DCE in the unconfined zone range between 2 - 4 ug/L, and the concentrations in the semiconfined zone range between 0.1J - 0.4J ug/L.

1,1-DCE was not detected during the Site 1 RI in either the Navy supply wells or the Site 1 monitoring wells. The limited areal extent of 1,1-DCE in the vicinity of the new monitoring well cluster, and the observation that the highest concentrations are detected in the shallower (unconfined) portion of the aquifer, appear to be indicative of a minor source of 1,1-DCE in the general vicinity (or just upgradient) of 10MW27. This VOC, however, has also been detected upgradient and off-Base in the residential well adjacent to the former Kellett facility (Section 2.1.2.2), and in the commercial establishment well (Section 2.1.2.3).

2.3.2.6 Discussion of Groundwater Conditions in the Vicinity of Supply Well No. 1

The groundwater analytical results from the new monitoring well cluster 10MW27/10MW28 and the packer test results from the Navy supply wells indicate that there is no significant source of TCE or PCE in the vicinity of Supply Well No. 1.

Although the concentrations are low in an absolute sense, the relatively higher concentrations of 1,1,1-TCA and 1,1-DCE in the unconfined aquifer versus the semiconfined aquifer indicate that a minor source of these VOCs may exist in this general area. Both of these VOCs, however, are also detected in the off-Base, upgradient groundwater, and their vertical distribution in the vicinity of Supply Well No. 1 may also have been influenced by redistribution through the open borehole of former monitoring well MW-1.

2.3.3 Groundwater Conditions in the Vicinity of the Navy Fuel Farm

The RI report (Tetra Tech NUS, July 2002) concluded that although the data were considered incomplete and inconclusive, the quantitative distribution of TCE within the upper portion of the semiconfined aquifer at, and downgradient of, Site 1 (Figure 3) was indicative of possible TCE sources located either in the general vicinity, or upgradient, of Site 10 (the Navy Fuel Farm), and Site Screening Area 11 (the Aircraft Parking Apron). As a result, three new deeper monitoring wells were installed adjacent to existing shallow wells at the fuel farm (new wells 10MW24, -25, and -26) to create cluster locations monitoring both the unconfined and semiconfined portions of the aquifer.

The analytical results for all of the Site 10 and Site 11 monitoring wells for TCE are included in Figure 2 (unconfined zone) and Figure 3 (semiconfined zone), and for PCE in Figure 4 (unconfined zone) and Figure 5 (semiconfined zone). These analytical results indicate that overall, the VOCs of concern occur infrequently and at very low concentrations (typically less than 1 ug/L) in the general vicinity of the Fuel Farm.

2.3.3.1 TCE

The Fuel Farm is not a significant source of TCE. TCE is detected in only a few wells at low concentrations (none exceeding 0.5J ug/L), which is not indicative of a significant source in this area, or a source large enough to account for the TCE concentrations detected within the upper portion of the confined aquifer at Site 1. The low detections of TCE in the unconfined aquifer (Figure 2) indicate that several very minor sources of TCE may exist in this area, including the Aircraft Parking Apron (Site Screening Area 11).

2.3.3.2 PCE

PCE is detected in only one shallow well at a low concentration (0.6J ug/L) at the Fuel Farm (Figure 4), indicating that this site is not a source of this VOC. PCE is detected in the semiconfined aquifer at low concentrations (less than 0.5 ug/L) in only two monitoring wells (Figure 5) that also have corresponding and similarly low concentrations of TCE.

The concentrations of PCE (and TCE) detected at the Fuel Farm are consistent with the concentrations detected further upgradient at the Navy property boundary in monitoring well 01MW09 (Figure 1, Cross-Section inset). Based on the regional groundwater flow patterns, the limited detections of VOCs at low concentrations within the confined aquifer at the Fuel Farm are interpreted to represent the western lateral extent of the large off-Base VOC plume that originates in the general area of the former Kellett facility.

2.3.3.3 Other VOCs

A minor source of 1,1-DCA may exist in the general vicinity (but upgradient) of the Fuel Farm. Multiple wells monitoring both the unconfined and confined portions of the aquifer contain low concentrations (1 ug/L or less) of 1,1-DCA, which are located upgradient of the Fuel Farm. The presence of 1,1-DCA in the unconfined aquifer at the Fuel Farm, and its absence in the adjacent off-Base groundwater, suggest that the minor source of this VOC may be on Base.

Multiple monitoring wells at the Fuel Farm contain BTEX compounds that have been addressed by a remedial action. These compounds are not discussed in this report because they are not detected in the Navy supply wells, and their distribution does not impact the evaluation of the Fuel Farm vicinity as a potential source of the VOCs in the supply wells or the Site 1 monitoring wells.

2.4 OTHER POTENTIAL SOURCE AREAS IN THE VICINITY OF THE SUPPLY WELLS

Regulators questioned the function and use of the NAS JRB Willow Grove administrative buildings that are clustered in the vicinity of the main entrance gate, in the east-central portion of the Base (see Figure 1). These buildings lay directly upgradient from Site 1 and the Navy supply wells, based on both the regional and Site 1 - specific interpreted groundwater flow directions. In addition, the regional groundwater flow interpretation suggests that the groundwater in this area could potentially be influenced by the local northward component of groundwater flow. Thus, if the groundwater plume were to originate in this portion of the Base, it would be possible for the plume to either migrate directly downgradient to the

vicinity of Site 1 and the supply wells, or to initially migrate off-Base (and either cause or contribute to the off-Base groundwater plume) before ultimately being captured by the Navy supply wells.

In response to these concerns, the Navy (in 2005) conducted a desktop survey and assessment of these buildings, and concluded that they are administrative buildings in which VOCs were neither used nor stored. Although documentation of this survey is no longer available, these conclusions were recently reinforced and documented by the CERFA (Community Environmental Response Facilitation Act) Identification of Uncontaminated Property at the NAS JRB Willow Grove (Tetra Tech NUS, December 2006).

3.0 SUMMARY OF CONCLUSIONS

The major source of the VOCs that are detected in the Site 1 groundwater and in the Navy potable supply wells is located upgradient of Site 1, at an off-Base location. The integration of the hydrogeological and chemical data produced by the Navy during multiple field investigations, combined with the results produced by the regulatory agencies in their investigations of off-Base facilities, documents the existence of the VOCs in the off-Base groundwater, and the flow of this groundwater onto the NAS JRB Willow Grove property.

Potential on-Base sources of the Site 1 VOCs that were identified in the RI report (Tetra Tech NUS, July 2002) have had data gaps filled through additional post-RI investigation. These new data support the interpretations and conclusion drawn in the RI that although Site 1 and the adjacent areas may locally constitute a minor source of VOCs, they cannot account for the higher concentrations of VOCs that are detected in the deeper, semiconfined aquifer beneath Site 1, in the Navy supply wells, and at the off-Base locations.

REFERENCES

Brown & Root Environmental, September 1997. Addendum Remedial Investigation Report for Site Investigation near the TINIUS Olsen Property.

Michalski and Britton, 1997. Ground Water, Vol 35, No. 2.

Tetra Tech NUS, Incorporated, July 2002. Remedial Investigation (RI) Report: for Site 1 - Privet Road Compound Area, NAS JRB Willow Grove, Horsham Township, Pennsylvania.

Tetra Tech NUS, Incorporated, August 2005. Site 1 RI Addendum 2, Technical Memorandum of Risk Assessment Evaluation for Site 1 - Privet Road Compound Groundwater (OU 3), Naval Air Station Joint Reserve Base, Willow Grove, Pennsylvania.

Tetra Tech NUS, Incorporated, September 2005. Site 1 RI Addendum 3 for Groundwater, Privet Road Compound Groundwater (OU 3), Naval Air Station Joint Reserve Base, Willow Grove, Pennsylvania.

Tetra Tech NUS, Incorporated, September 2005. Work Plan for Continued Groundwater Source Investigation, Site 1 - Groundwater (OU 3).

Tetra Tech NUS, Incorporated, December 2006. Community Environmental Response Facilitation Act Identification of Uncontaminated Property at NAS JRB Willow Grove.

United States Environmental Protection Agency, Hazardous Control Division, July 16, 1987. Preliminary Assessment of Kellett Aircraft Corporation.

United States Environmental Protection Agency, Hazardous Control Division, July 28, 1988. Site Inspection of Kellett Aircraft Corporation.

United States Environmental Protection Agency, Region 3, June 16, 1999. Bulletin QAD023 - Low Flow Groundwater Purge and Sampling Guidance.

United States Geological Survey (USGS), 2006. Open File report 01-149.

United States Geological Survey (USGS), 2007. Scientific Investigations Report 2006-5243

TABLES

TABLE 1
MONITORING WELL CONSTRUCTION DETAILS

CONTINUED GROUNDWATER (OU 3) SOURCE INVESTIGATION
SITE 1 - PRIVET ROAD COMPOUND
NAS JRB WILLOW GROVE
HORSHAM TOWNSHIP, MONTGOMERY COUNTY, PENNSYLVANIA

WELL	BOREHOLE DEPTH (ft)	SCREEN INTERVAL	SANDPACK INTERVAL	REFERENCE ELEVATION (TOP OF PVC CASING)
01MW09S	150	120 - 130	115 - 135	338.53
01MW10S	350	148 - 158	143 - 163	317.00
01MW10D		300 - 320	295 - 320	317.01

ABLE 2
GROUNDWATER ANALYTICAL RESULTS SUMMARY
NAS JRB WILLOW GROVE, PA
Site 1 - January-February 2006

Well ID	Date Sampled	Acetone	CCl4	Chloroform	cis-1,2-DCE	Methylene Chloride	PCE	TCE	Toluene
01MW10S	2-Feb-06	ND	ND	4.5	2.6	3.0 B	**20**	3.2	0.24 J
01MW10D	3-Feb-06	2.6 J	ND	0.47 J	0.59 J	1.0 B	3.0	0.88 J	0.33 J
01MW09	7-Feb-06	ND	0.30 J	1.2	2.8	ND	**6.8**	3.8	ND

Notes:
Only analytes detected in at least one sample are included on the table. Results are reported in ug/L.
ND: Compound Not Detected
J : Estimated value
B : Analyte was also found in the associated lab blank

TABLE 3

SITE 1: PRIVET ROAD COMPOUND
USGS PACKER TEST ANALYTICAL RESULTS OF NAVY SUPPLY WELLS NO. 1 AND NO. 2

SUPPLY WELL NO. 1 (April 2000)				
SAMPLE DEPTH	TCE	PCE	c-1,2-DCE	1,1,1-TCA
52 - 59	ND	4.0 J	ND	1.5 J
79 - 85	ND	1.7 J	ND	2.6 J
106	ND	2.0 J	ND	2.3 J
124 - 152	ND	6.2 J	ND	ND
182	2.4 J	16	1.0 J	1.9 J
241	9.0 J	34	3.9 J	ND
256	8.3 J	39	4.7 J	ND
350 - 354	8.3 J	21	3.1 J	ND

SUPPLY WELL NO. 2 (March 2000)				
SAMPLE DEPTH	TCE	PCE	c-1,2-DCE	1,1,1-TCA
68 - 74	ND	ND	ND	ND
115	ND	ND	ND	ND
162	1.6 J	ND	ND	ND
205	1.1 J	3.6 J	ND	ND
314	ND	1.8 J	ND	ND

Notes:
Sample depth is in feet.
Analytical results are in ug/L.
TCE = Trichloroethene.
PCE = Tetrachloroethene.
c-1,2-DCE = cis-1,2-Dichloroethene.
1,1,1-TCA = 1,1,1-Trichloroethane.

Source:
Remedial Investigation Report for Site 1 - Privet Road Compound (Tetra Tech NUS, July 2002)

FIGURES

2192_Willow_Grove\0911\2192GM05.dwg 06/28/07 MKB

LEGEND

- MONITORING WELL LOCATION
- NAVY SUPPLY WELL LOCATION
- 300 REGIONAL HYDRAULIC HEAD CONTOUR (FROM USGS)
- BOUNDARY MONITORING WELL LOCATION
- PROJECTED OUTCROP AREA OF PRINCIPAL STRATIGRAPHIC UNIT AT SITE 1 (USGS, 2001)

N

FORMER AIR FORCE SUPPLY WELL

NAVY SITE 1 PRIVET ROAD

NAVY SUPPLY WELL 1

AIR FORCE SITE 4 WASH RACK

N76E BEDROCK STRIKE FOR SUPPLY WELL NO. 1

N76E BEDROCK STRIKE FOR SUPPLY WELL NO. 2

NAVY SUPPLY WELL 2

ADMINISTRATIVE BUILDINGS

(SEE INSET - CROSS-SECTION)

DIRECTION OF BEDROCK DIP

INTERMITTENT STREAM

NAVY SITE 10 FUEL FARM

FORMER KELLETT FACILITY

APPROXIMATE EXTENT OF MTBE PLUME

PRIVATE RESIDENCE (PADEP FILES)	
WELL	1996
PCE (ug/L)	1,800 E
TCE (ug/L)	69
C-1,2-DCE (ug/L)	91
1,1-DCE (ug/L)	13
1,1,1-TCA (ug/L)	1 J
t-1,2-TCE (ug/L)	1 J
WELL	2003
PCE (ug/L)	0.5
TCE (ug/L)	ND
C-1,2-DCE (ug/L)	ND
1,1-DCE (ug/L)	ND
1,1,1-TCA (ug/L)	ND
t-1,2-TCE (ug/L)	ND
POST-FILTER?	

SURFACE WATER SAMPLES	1988
PCE (ug/L)	43
TCE (ug/L)	9
1,1,1-TCA (ug/L)	10/11 (DUP)
SI (NUS) (SEE INSET - KELLETT FACILITY)	

HTMA WELL NO. 10	2001
TCE (ug/L)	0.2
1,1,1-TCA (ug/L)	0.2
HTMA	

RESTAURANT WELL	1997
PCE (ug/L)	16
TCE (ug/L)	5
C-1,2-DCE (ug/L)	4.6
1,1-DCE (ug/L)	0.75 J
1,1,1-TCA (ug/L)	0.31 J
PADEP	

U S NAVAL AIR STATION (WILLOW GROVE)

Hallowell

Warm Garden

Gethsemane Cem

IBM 369 Armory

0 600 1,200

SCALE IN FEET

INSET - KELLETT FACILITY

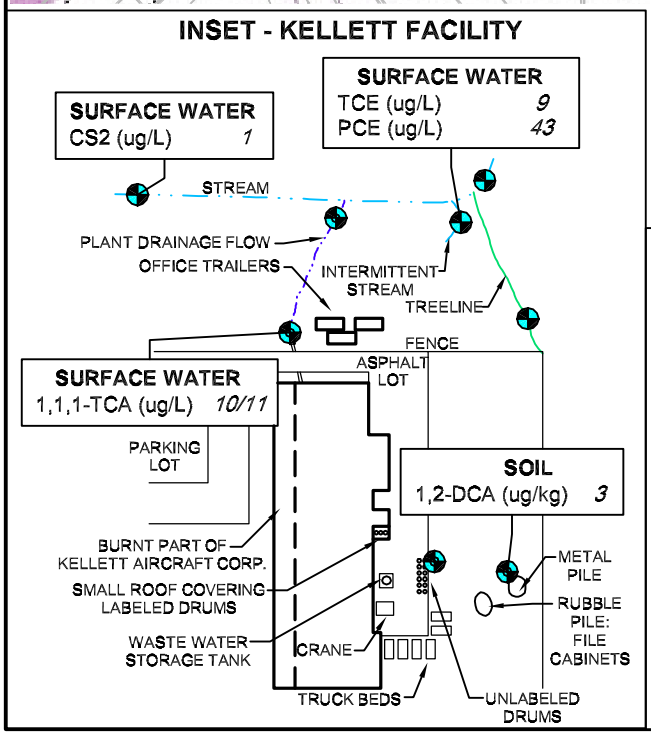

INSET - CROSS-SECTION (USGS, 2007)

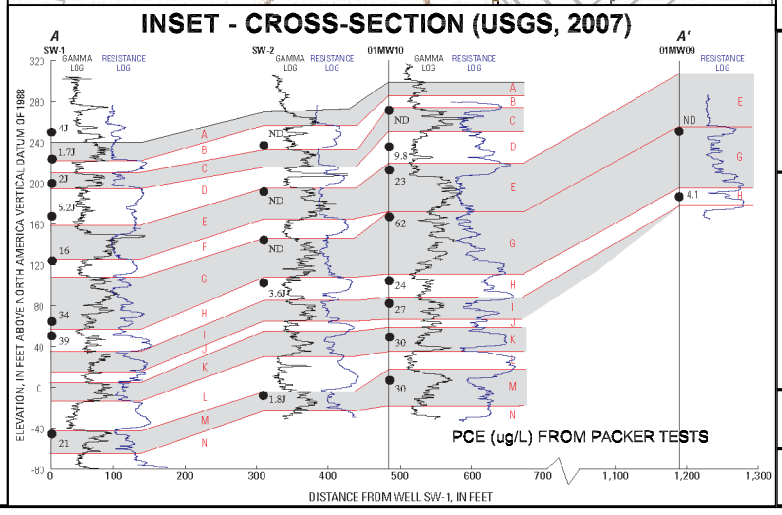

TETRA TECH NUS, INC.

GROUNDWATER CONDITIONS
IN THE VICINITY OF
NAS JRB SITE 1 – PRIVET ROAD
NAS JRB WILLOW GROVE
WILLOW GROVE, PENNSYLVANIA

FILE	SCALE
2192GM05.DWG	AS NOTED
FIGURE NUMBER	REV / DATE
FIGURE 1	0 / 06/28/07

2192 Willow Grove\0912\2192GM03-4.dwg 06/27/07 MKB

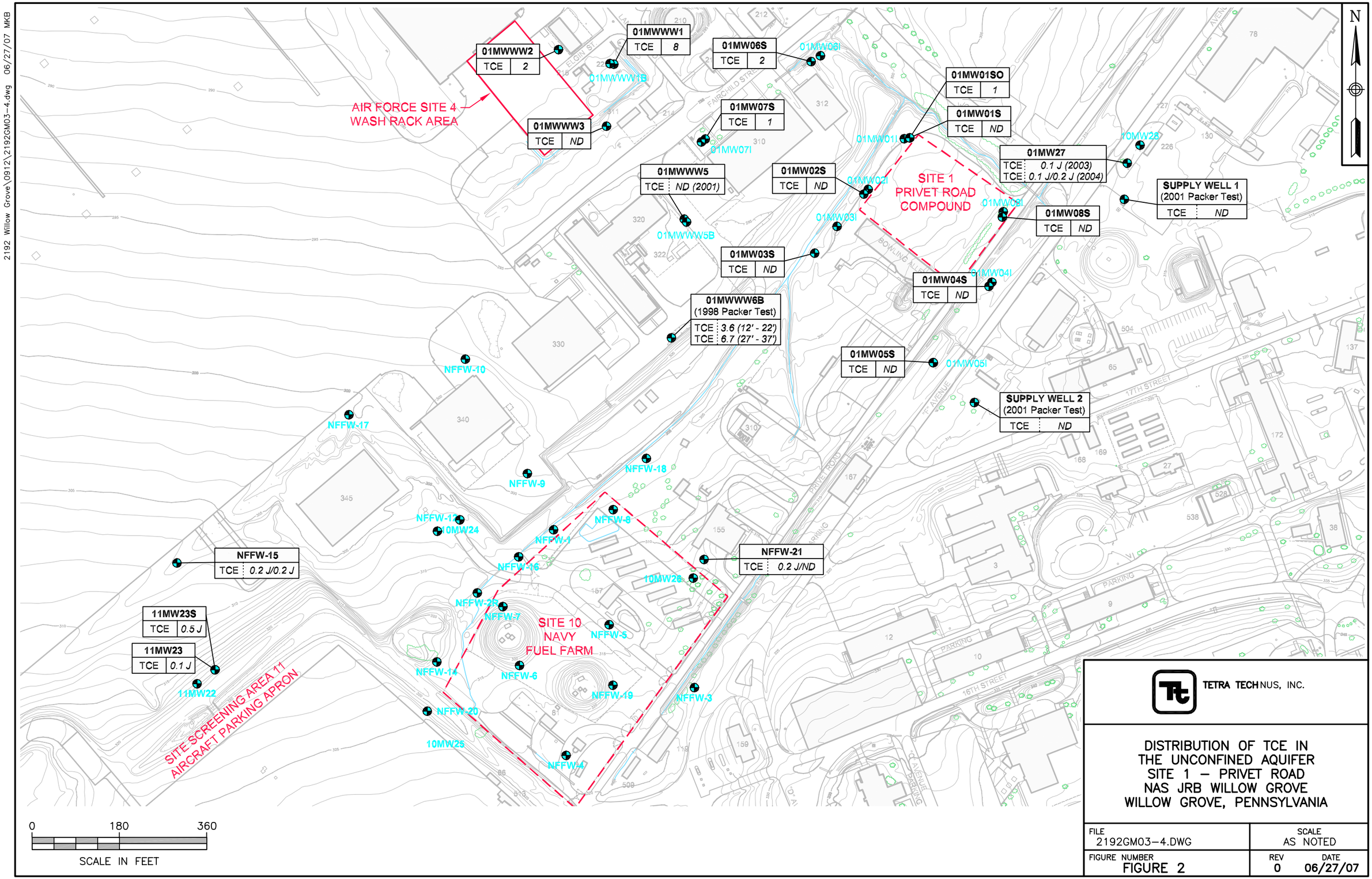

TETRA TECH NUS, INC.

DISTRIBUTION OF TCE IN
THE UNCONFINED AQUIFER
SITE 1 – PRIVET ROAD
NAS JRB WILLOW GROVE
WILLOW GROVE, PENNSYLVANIA

FILE	SCALE
2192GM03-4.DWG	AS NOTED
FIGURE NUMBER	REV / DATE
FIGURE 2	0 / 06/27/07

2192 Willow Grove\0912\2192GM03-5.dwg 06/27/07 MKB

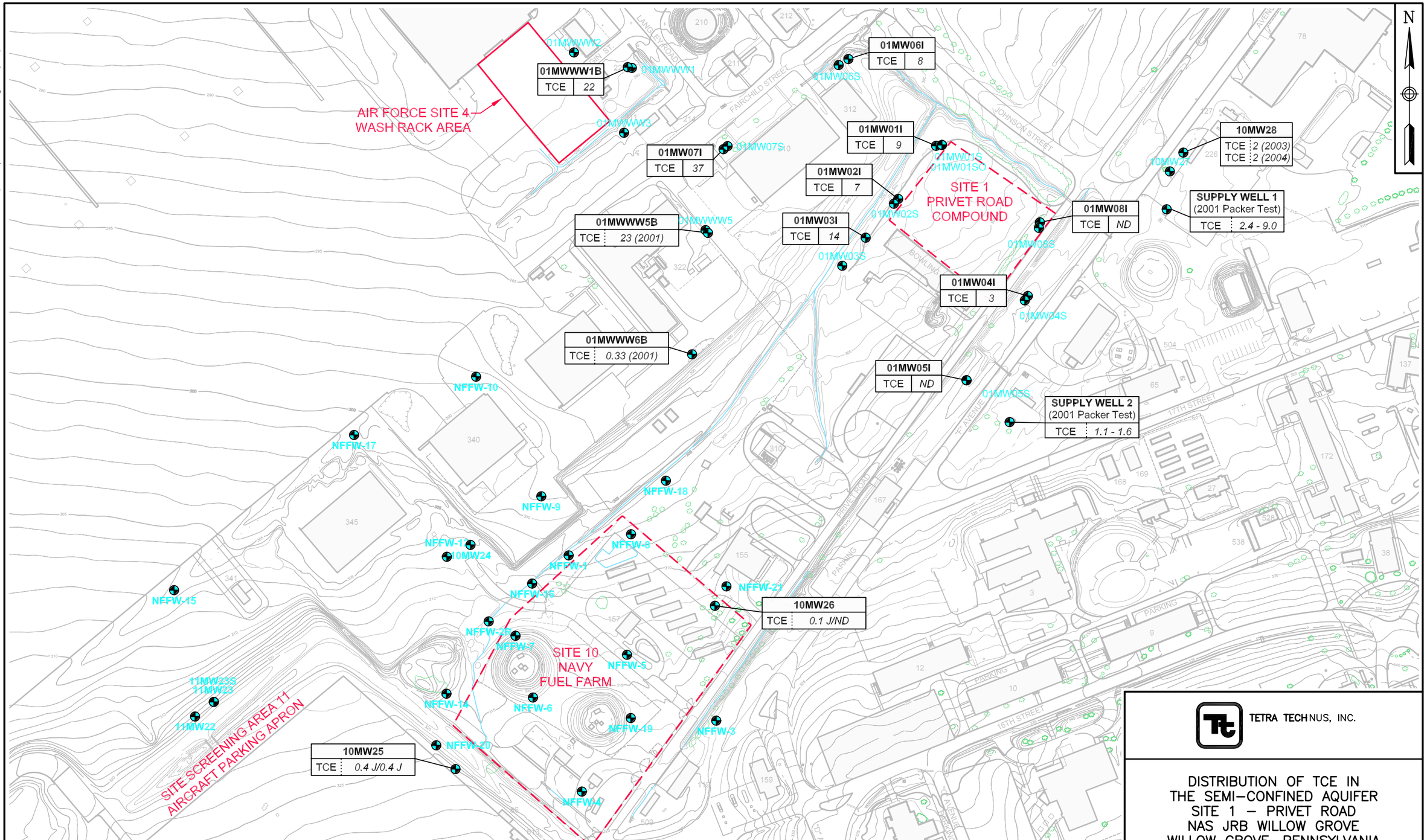

TETRA TECHNUS, INC.

DISTRIBUTION OF TCE IN
THE SEMI-CONFINED AQUIFER
SITE 1 – PRIVET ROAD
NAS JRB WILLOW GROVE
WILLOW GROVE, PENNSYLVANIA

FILE	SCALE
2192GM03-5.DWG	AS NOTED
FIGURE NUMBER	REV / DATE
FIGURE 3	0 / 06/27/07

2192 Willow Grove\0912\2192GM03-2.dwg 06/27/07 MKB

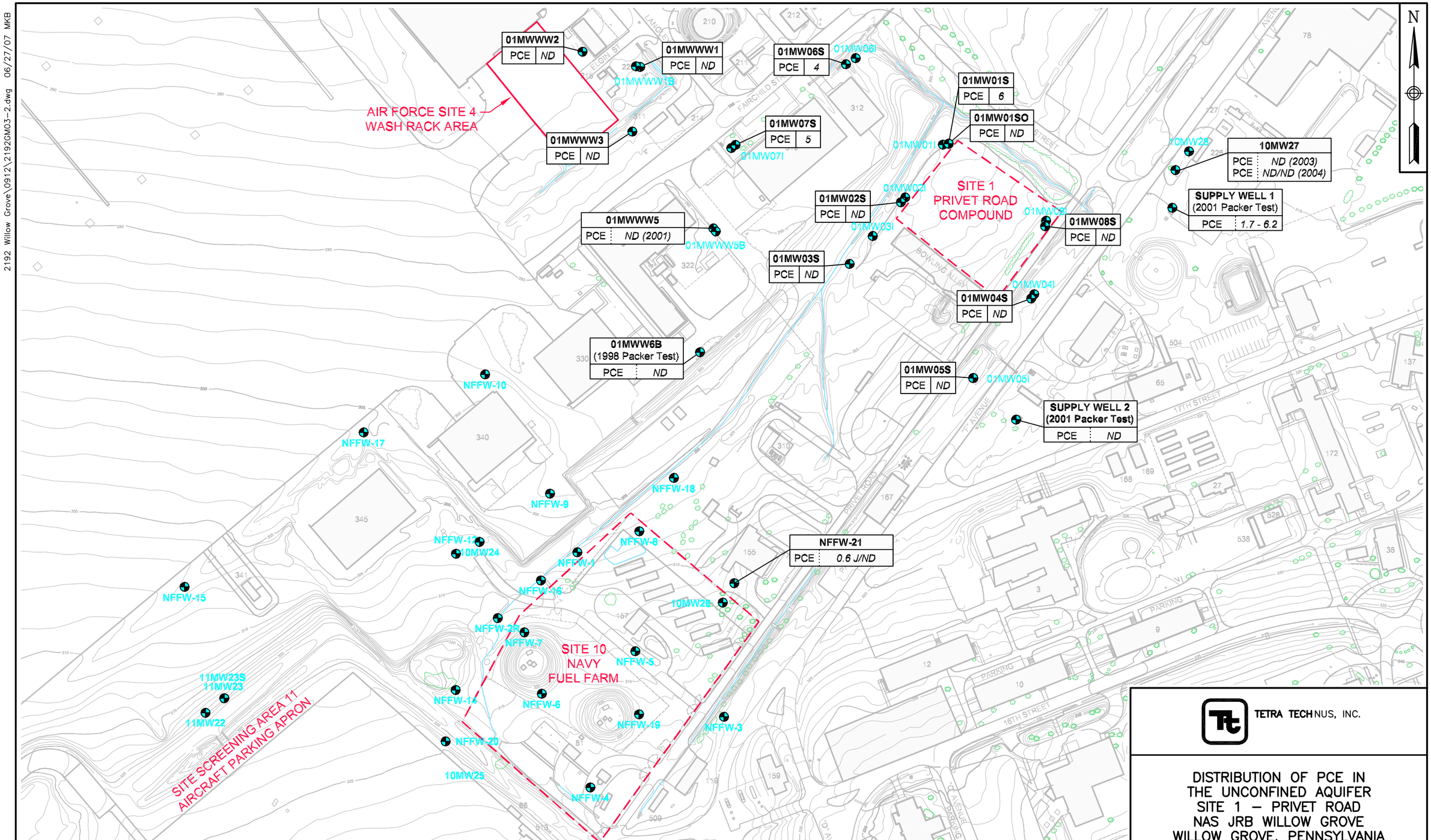

TETRA TECH NUS, INC.

DISTRIBUTION OF PCE IN
THE UNCONFINED AQUIFER
SITE 1 – PRIVET ROAD
NAS JRB WILLOW GROVE
WILLOW GROVE, PENNSYLVANIA

FILE 2192GM03-2.DWG	SCALE AS NOTED
FIGURE NUMBER FIGURE 4	REV 0 / DATE 06/27/07

2192 Willow Grove\0912\2192GM03-3.dwg 06/27/07 MKB

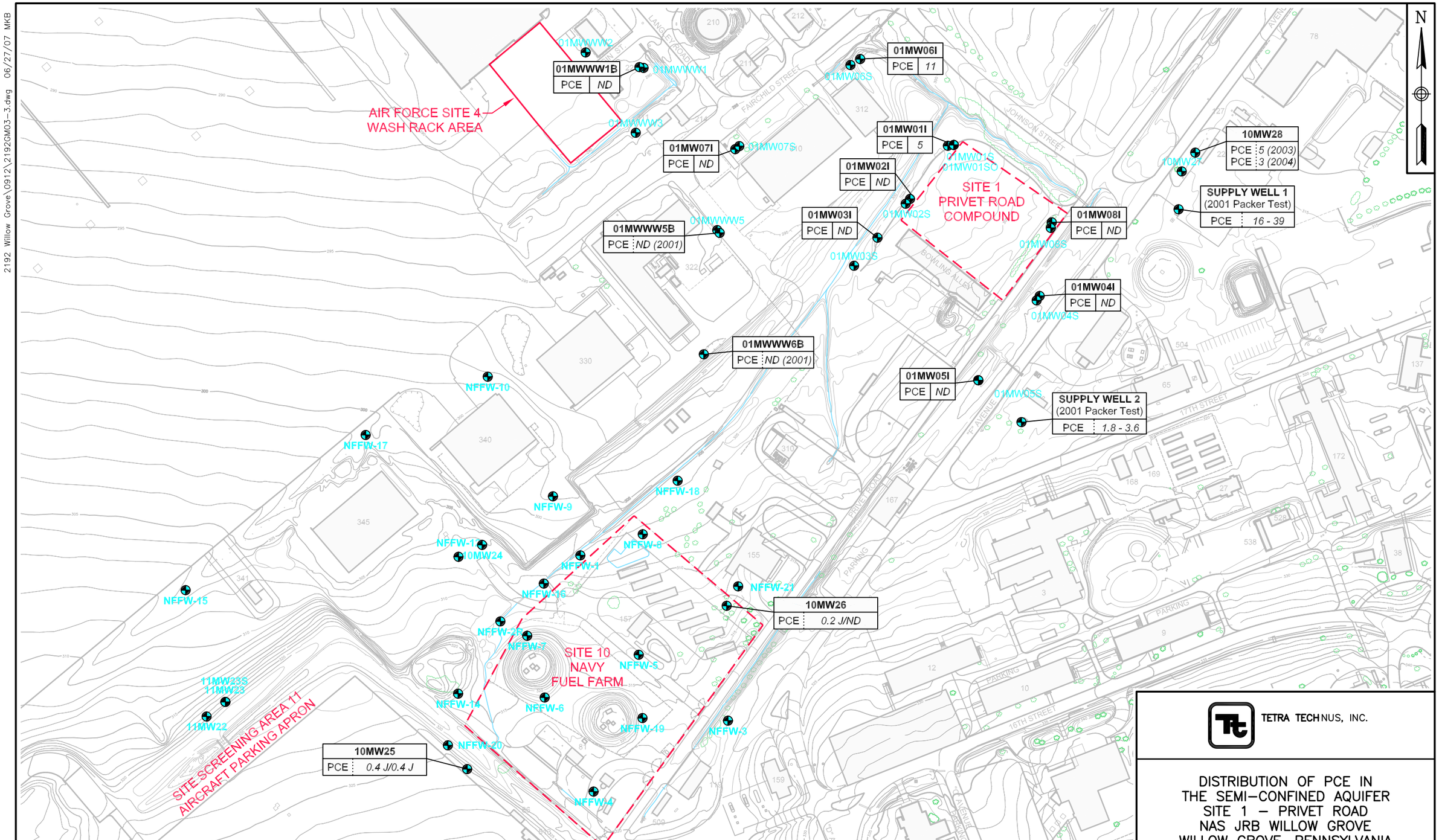

TETRA TECHNUS, INC.

DISTRIBUTION OF PCE IN
THE SEMI-CONFINED AQUIFER
SITE 1 – PRIVET ROAD
NAS JRB WILLOW GROVE
WILLOW GROVE, PENNSYLVANIA

FILE	SCALE
2192GM03-3.DWG	AS NOTED
FIGURE NUMBER	REV / DATE
FIGURE 5	0 / 06/27/07

APPENDICES

APPENDIX A

U.S. DEPARTMENT OF THE INTERIOR
U.S. GEOLOGICAL SURVEY

Prepared in cooperation with the
U.S. NAVY

OPEN-FILE REPORT 01-149

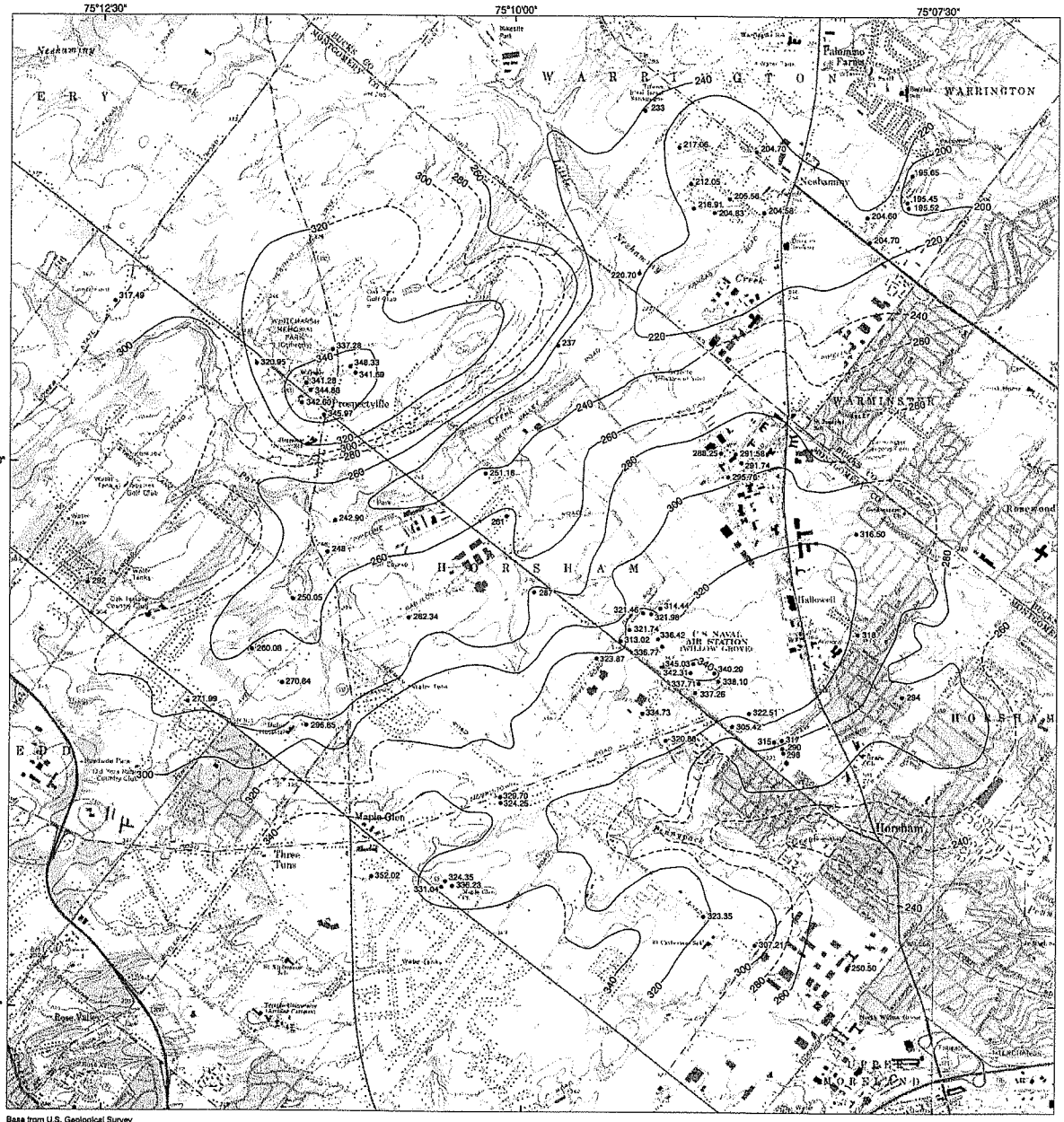

Base from U.S. Geological Survey
Ambler 1:24,000, 1983
Hatboro 1:24,000, 1983

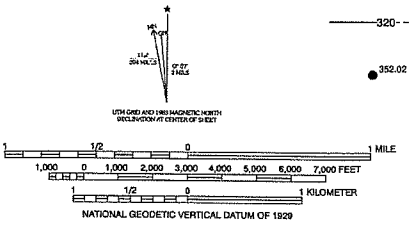

EXPLANATION

—320— POTENTIOMETRIC CONTOUR -- Shows altitude of the potentiometric surface as defined by measured water levels, altitudes of streams, and topography. Dashed where approximately located. Contour interval is 20 feet. Altitude in feet above National Geodetic Vertical Datum of 1929.

352.02 WATER-LEVEL MEASUREMENT SITE -- Symbol gives location of site. Number is altitude of water level measured in a drilled well in feet above the National Geodetic Vertical Datum of 1929.

LOCATION OF MAPPED AREA

ALTITUDE AND CONFIGURATION OF THE REGIONAL POTENTIOMETRIC SURFACE, WILLOW GROVE NAVAL AIR STATION/JOINT RESERVE BASE AND VICINITY, HORSHAM TOWNSHIP, MONTGOMERY COUNTY, PENNSYLVANIA, OCTOBER 7-8, 1999

By
RONALD A. SLOTO, DANIEL J. GOODE, AND JOHN H. WAY

2001

APPENDIX B

EPA

POTENTIAL HAZARDOUS WASTE SITE
SITE INSPECTION REPORT
PART 2 - WASTE INFORMATION

I. IDENTIFICATION

01 STATE	02 SITE NUMBER
PA	1280

II. WASTE STATES, QUANTITIES, AND CHARACTERISTICS

01 PHYSICAL STATES (Check all that apply)

- ☐ A. SOLID
- ☐ B. POWDER, FINES
- ☐ C. SLUDGE
- ☐ D. OTHER _____ (Specify)
- ☐ E. SLURRY
- ☒ F. LIQUID
- ☐ G. GAS

02 WASTE QUANTITY AT SITE (Measures of waste quantities must be independent)

TONS _____
CUBIC YARDS Unknown
NO. OF DRUMS _____

03 WASTE CHARACTERISTICS (Check all that apply)

- ☐ A. TOXIC
- ☐ B. CORROSIVE
- ☐ C. RADIOACTIVE
- ☐ D. PERSISTENT
- ☐ E. SOLUBLE
- ☐ F. INFECTIOUS
- ☐ G. FLAMMABLE
- ☐ H. IGNITABLE
- ☐ I. HIGHLY VOLATILE
- ☐ J. EXPLOSIVE
- ☐ K. REACTIVE
- ☐ L. INCOMPATIBLE
- ☐ M. NOT APPLICABLE

III. WASTE TYPE

CATEGORY	SUBSTANCE NAME	01 GROSS AMOUNT	02 UNIT OF MEASURE	03 COMMENTS
SLU	SLUDGE			The waste generated is the re-
OLW	OILY WASTE			sult of the aluminum cleaning
SOL	SOLVENTS			process. The waste is stored on
PSD	PESTICIDES			site until it is removed by a
OCC	OTHER ORGANIC CHEMICALS			licensed hauler. The waste consists
IOC	INORGANIC CHEMICALS			of the rinse material that exists
ACD	ACIDS			after the aluminum has been treat-
BAS	BASES			ed with chromocoat, deoxidizer,
MES	HEAVY METALS			oakite aluminum cleaner, and deterge

IV. HAZARDOUS SUBSTANCES (See Appendix for most frequently cited CAS Numbers)

01 CATEGORY	02 SUBSTANCE NAME	03 CAS NUMBER	04 STORAGE DISPOSAL METHOD	05 CONCENTRATION	06 MEASURE OF CONCENTRATION
SOL	1,1,1-trichloroethane	71-55-6		11	ug/l
SOL	chloroform	67-66-3		230	ug/l
SOL	1,2-dichloroethane	107-06-2		3	ug/kg
SOL	trichloroethene	79-01-6		20	ug/l
SOL	tetrachloroethene	127-18-4		57	ug/l
MES	cadmium	7440-43-9		42	mg/kg
MES	chromium	7440-47-3		1,040	mg/kg
MES	copper	7440-50-8		189	mg/kg
MES	iron	1309-37-1		186,000	mg/kg
MES	lead	7439-92-1		322	mg/kg
MES	zinc	7440-66-6		1,830	mg/kg

IV. FEEDSTOCKS (See Appendix for CAS Numbers)

CATEGORY	01 FEEDSTOCK NAME	02 CAS NUMBER	CATEGORY	01 FEEDSTOCK NAME	02 CAS NUMBER
FDS			FDS		
FDS			FDS		
FDS			FDS		
FDS			FDS		

VI. SOURCES OF INFORMATION (Cite specific references, e.g., state files, sample analysis, reports)

NUS FIT 3 preliminary assessment on March 27, 1987.

NUS FIT 3 site inspection on September 30, 1987. PA DER files

APPENDIX C

-BL-13.1
3

7-15-96

Lab Number ORG-3993

Date Received 7/16/96

1

COMMONWEALTH OF PENNSYLVANIA
DEPARTMENT OF ENVIRONMENTAL RESOURCES
BUREAU OF LABORATORIES
SPECIAL ANALYSES REPORT

BLISHMENT	CASE	FACILITY	COLL NUMBER
Hankin	GAS STAR		0145

NTY	MUNICIPALITY	PROGRAM	COLL NAME/PHONE NUMBER	TYPE TR	STD ANALYSIS
Montgomery	Horsham	ECP	Thomas Sanigiani 610-832-5926		04

CARD (3)	ID CODE (ALL CARDS) 4–16	LATITUDE 4–10	LONGITUDE 11–18	DATE 19–24	TIME 25–28	KIND 29
1 / 2	Cnty Mun T Est Case Fac.		0	M D Y: 07 15 96	Hr Min: 10 30	

S Q 30 34	BUREAU 35–37 AMIS	SAMPLE NUMBER 38–43	STREAM NAME 44–57	RELATIVE POINT 58
	ECP	014512 6		

DESCRIPTION WHERE SAMPLE TAKEN: Taken from holding tank before carbon filter. HNU reading of 5ppm was observed

CUSTODY LOG

Shipped U.S. Cargo Date 7-15-96

Seal No. A06739

ed by: GNC

Seal Condition: INTACT

ADDITIONAL LAB ANALYSES

VOA Scan
BTEX, MTBE,
TCE and breakdowns

QUALITATIVE REPORT

DO NOT WRITE BELOW THIS LINE

DEP-RECEIVED
SOUTHEAST REGION
JUL 29 1996

See ATTACHED SHEETS (3)

QUANTITATIVE RESULTS

SIB:	UNITS:	ANALYSIS CODE	RESULTS (SHOW DECIMAL POINTS ON LINES)

ANALYST SIGNATURE [signature] DATE 7/23/96

RINE PRESENT IN SAMPLE

___ YES X NO

1ADL
VOLATILE ORGANICS ANALYSIS DATA SHEET
MULTIPLE DILUTION RESULTS

EPA SAMPLE NO.

0145126

ab Name:

ab Code: Case No.: Contract:

atrix: (soil/water) WATER SAS No.: SDG No.: 960718HP5972A

mple wt/vol: 25.00 (g/mL) ML Lab Sample ID: 96003993

vel: (low/med) LOW Lab File ID: 963993

Moisture: _____ decanted: (Y/N)___ Date Received: _____

ncentrated Extract Volume: _____ (uL) Date Extracted: 07/16/96

jection Volume: _____ (uL) Date Analyzed: 07/17/96

Cleanup: (Y/N) N pH: 7.0 Dilution Factor: 1.0

CAS NO.	COMPOUND	CONCENTRATION UNITS: (ug/L or ug/Kg) UG/L	Q
563-58-6	1,1-Dichloropropene	2.0	U
10061-01-5	cis-1,3-Dichloropropene	2.0	U
10061-02-6	trans-1,3-Dichloropropene	2.0	U
98-06-6	1,1-Dimethylethylbenzene	2.0	U
100-41-4	Ethylbenzene	2.0	U
87-68-3	Hexachlorobutadiene	2.0	U
591-78-6	2-Hexanone	2.0	U
99-87-6	4-Isopropyltoluene	20	U
1634-04-4	2-Methoxy-2-methylpropane	2.0	U
98-82-8	1-Methylethylbenzene	2.0	U
108-10-1	4-Methyl-2-pentanone	2.0	U
135-98-8	1-Methylpropylbenzene	20	U
91-20-3	Napthalene	2.0	U
103-65-1	n-Propylbenzene	2.0	U
100-42-5	Styrene	2.0	U
630-20-6	1,1,1,2-Tetrachloroethane	2.0	U
79-34-5	1,1,2,2-Tetrachloroethane	2.0	U
127-18-4	Tetrachloroethene	2.0	U
108-88-3	Toluene	1800	E
87-61-6	1,2,3-Trichlorobenzene	2.0	U
120-82-1	1,2,4-Trichlorobenzene	2.0	U
71-55-6	1,1,1-Trichloroethane	2.0	U
79-00-5	1,1,2-Trichloroethane	1.0	J
79-01-6	Trichloroethene	2.0	U
75-69-4	Trichlorofluoromethane	69	
96-18-4	1,2,3-Trichloropropane	2.0	U
95-63-6	1,2,4-Trimethylbenzene	2.0	U
108-67-8	1,3,5-Trimethylbenzene	2.0	U
75-01-4	Vinyl chloride	2.0	U
108-38-3	m/p-Xylene	2.0	U
95-47-6	o-Xylene	2.0	U
		2.0	U

FORM I PEST

KELLETT

11-20-03

Zang, Robert

From: Zang, Robert
Sent: Thursday, November 20, 2003 8:39 AM
To: Mills, Sharon
Subject: RE: Kellet/Hankin Well

Sharon:

I appreciate the feedback. Mrs. Hankin's address is-

Mrs. Janet Hankin
1300 Easton Road
Horsham, PA
19044

Thanks,
Rob

-----Original Message-----
From: Mills, Sharon
Sent: Wednesday, November 19, 2003 2:57 PM
To: Canigiani, Thomas; Zang, Robert
Subject: Kellet/Hankin Well

I have just received the results from the sampling that we did at the Hankin well on October 30, 2003. The pre-treated water was found to have lead at 30.8 ug/L; there were no VOAs above the MCLs - TCE was ND and PCE was 0.5 ppb. The treated water had no VOAs or inorganics above MCLs.
Tom: I just thought you might be interested.
Rob: I will provide you with a copy of all of the results. Please provide me with Mrs. Hankin's mailing address so that I may draft a letter to her.
Thank you both,
-Sharon.

APPENDIX D

HCL

Rev.11/91

97002413

ES

Lab Use Only

Lab Number

Date Received 6-20-97

Matrix Code 1

ENT	CASE	FACILITY	COLL NUMBER
Double Vision	GAS STAR		0145

	MUNICIPALITY	GRANT CODE	COLL NAME/PHONE NUMBER	TYPE TR	STD ANALYSIS
Tapinery	Horsham	009	Tom Canigrani 610-832-5926		04

3)	JO CODE (ALL CARDS) 4-16	LATITUDE 4-10	LONGITUDE 11-18	DATE 19-24	TIME 25-28	KIND 29
	Cnty / Mun / T / Est / Case / Fac.		0	M 05 D 19 Y 97	Hr 11 Min 30	

34	BUREAU 35-37 AMIS	SAMPLE NUMBER 38-43	STREAM NAME 44-57	RELATIVE POINT 58
	FCR	014569		

RIPTION WHERE SAMPLE TAKEN: Sample taken from pressure tank in basement ~~DX~~ treatment observed. Well purged Carbon Filter and Water Softener (unknown concentration) should not be any.

REQUESTED LAB ANALYSES: VOA Drinking Water Standard

CUSTODY LOG

U.S. Cargo Date 5-19-97

o. A07654

ondition: Intact

QUALITATIVE REPORT

DO NOT WRITE BELOW THIS LINE

Please see the attached sheets

JUN 09 1997

QUANTITATIVE RESULTS

	UNITS:	ANALYSIS CODE	RESULTS (SHOW DECIMAL POINTS ON LINES)

ANALYST [signature] SIGNATURE DATE 6/5/97

ORINE PRESENT IN SAMPLE

____ YES X NO Ph < 2

1ADL
VOLATILE ORGANICS ANALYSIS DATA SHEET
MULTIPLE DILUTION RESULTS

EPA SAMPLE NO.

0145169

Contract:

ode: Case No.: SAS No.: SDG No.: 970520ITD

ix: (soil/water) WATER Lab Sample ID: 97002413

ple wt/vol: 25.00 (g/mL) ML Lab File ID: 02413

el: (low/med) LOW Date Received: _____

Moisture: _____ decanted: (Y/N)___ Date Extracted:

ncentrated Extract Volume:_____(uL) Date Analyzed: 05/21/97

ection Volume: _____(uL) Dilution Factor: 1.0

Cleanup: (Y/N) N pH: 2.0

CAS NO.	COMPOUND	CONCENTRATION UNITS: (ug/L or ug/Kg) UG/L	Q
67-64-1	Acetone	5.0	U
71-43-2	Benzene	0.50	U
108-86-1	Bromobenzene	0.50	U
74-97-5	Bromochloromethane	0.50	U
75-27-4	Bromodichloromethane	0.50	U
75-25-2	Bromoform	0.50	U
74-83-9	Bromomethane	2.0	U
78-93-3	2-Butanone (MEK)	5.0	U
104-51-8	n-Butylbenzene	0.50	U
56-23-5	Carbon tetrachloride	8.1	
108-90-7	Chlorobenzene	0.11	J
75-00-3	Chloroethane	0.50	U
67-66-3	Chloroform	2.3	
74-87-3	Chloromethane	0.50	U
95-49-8	o-Chlorotoluene	0.50	U
106-43-4	p-Chlorotolulene	0.50	U
124-48-1	Dibromochloromethane	0.50	U
96-12-8	1,2-Dibromo-3-chloropropane	0.50	U
106-93-4	1,2-Dibromoethane (EDB)	0.50	U
74-95-3	Dibromomethane	0.50	U
95-50-1	1,2-Dichlorobenzene	0.062	J
541-73-1	1,3-Dichlorobenzene	0.50	U
106-46-7	1,4-Dichlorobenzene	0.50	U
75-71-8	Dichlorodifluoromethane	0.50	U
75-34-3	1,1-Dichloroethane	0.57	
107-06-2	1,2-Dichloroethane	0.50	U
75-35-4	1,1-Dichloroethene	0.75	
156-59-2	cis-1,2-Dichloroethene	4.6	
156-60-5	Trans-1,2-Dichloroethene	0.50	U
75-09-2	Dichloromethane	0.50	U
78-87-5	1,2-Dichloropropane	0.50	U
142-28-9	1,3-dichloropropane	0.50	U
594-20-7	2,2-Dichloropropane	0.50	U

FORM I PEST

2 Pages

1ADL
VOLATILE ORGANICS ANALYSIS DATA SHEET
MULTIPLE DILUTION RESULTS

EPA SAMPLE NO.

0145169

me: Contract:

Code: Case No.: SAS No.: SDG No.: 970520ITD

rix: (soil/water) WATER Lab Sample ID: 97002413

ple wt/vol: 25.00 (g/mL) ML Lab File ID: 02413

el: (low/med) LOW Date Received: _____

oisture: _____ decanted: (Y/N)____ Date Extracted:

centrated Extract Volume:_____(uL) Date Analyzed: 05/21/97

ection Volume: _____(uL) Dilution Factor: 1.0

Cleanup: (Y/N) N pH: 2.0

CAS NO.	COMPOUND	CONCENTRATION UNITS: (ug/L or ug/Kg) UG/L	Q
563-58-6	1,1-Dichloropropene	0.50	U
10061-01-5	cis-1,3-Dichloropropene	0.50	U
10061-02-6	trans-1,3-Dichloropropene	0.50	U
98-06-6	1,1-Dimethylethylbenzene	0.50	U
100-41-4	Ethylbenzene	0.50	U
87-68-3	Hexachlorobutadiene	0.50	U
591-78-6	2-Hexanone	5.0	U
99-87-6	4-Isopropyltoluene	0.50	U
1634-04-4	2-Methoxy-2-methylpropane	2.2	
98-82-8	1-Methylethylbenzene	0.50	U
108-10-1	4-Methyl-2-pentanone (MIBK)	5.0	U
135-98-8	1-Methylpropylbenzene	0.50	U
91-20-3	Napthalene	0.50	U
103-65-1	n-Propylbenzene	0.50	U
100-42-5	Styrene	0.50	U
630-20-6	1,1,1,2-Tetrachloroethane	0.50	U
79-34-5	1,1,2,2-Tetrachloroethane	0.50	U
127-18-4	Tetrachloroethene	16	
108-88-3	Toluene	0.50	U
87-61-6	1,2,3-Trichlorobenzene	0.50	U
120-82-1	1,2,4-Trichlorobenzene	0.50	U
71-55-6	1,1,1-Trichloroethane	0.31	J
79-00-5	1,1,2-Trichloroethane	0.50	U
79-01-6	Trichloroethene	5.0	
75-69-4	Trichlorofluoromethane	0.50	U
96-18-4	1,2,3-Trichloropropane	0.50	U
95-63-6	1,2,4-Trimethylbenzene	0.50	U
108-67-8	1,3,5-Trimethylbenzene	0.50	U
108-38-3	m/p-Xylene	1.0	U
95-47-6	o-Xylene	0.50	U
75-01-4	Vinyl chloride	0.50	U

APPENDIX E

BORING LOG

PROJECT NAME: GW INVEST. - NAS WILLOW GROVE
PROJECT NUMBER: N62472-03-D-0057
DRILLING COMPANY: BICHELBERGERS, INC.
DRILLING RIG: INGERSOLL RAND - T3W
BORING NUMBER: 01 MW09
DATE: 11/01 + 11/03/05
GEOLOGIST: R.G. SCHAAR
DRILLER: D. NEY

Sample No. and Type or RQD	Depth (Ft.) or Run No.	Blows / 6" or RQD (%)	Sample Recovery / Sample Length	Lithology Change (Depth/Ft.) or Screened Interval	Soil Density/ Consistency or Rock Hardness	Color	Material Classification	USCS*	Remarks	PID/FID Reading (ppm) Sample	Sampler BZ	Borehole**	Drilling BZ**
				2'		BRWN	TOPSOIL ORGANIC	SP				0.0	
							CONTENT, SILT			0.0			
							INCREASING W.				0.0	0.0	
							DEPTH					0.0	
				11'									
							FRACTURED			0.0			
							BEDROCK (SANDST.)					0.0	
										0.0		0.0	
		N.A.		20'									
						RED	ZEOLITES, FERICH,		YIELD 5-10		0.0		
				24'			COARSER FRAGS		GPM			0.0	
							FRACTURE ZONE?			0.1			
									LOW YIELD			0.1	
						RED	CLAY MINERALS		(<5GPM)	0.0			
				31'		GREY	STILL SAME						
30/35	A			34'			FRAC ZONE				PID		
										DEFECTIVE			
35/40	A						MOD. MINERALIZ.		OVERPRESSURE				
									ON DRILL SITE!!				
				42									
40/45	A						CLAY MINERALS		YIELD >10GPM				
							LARGER FRAGS						
45/50	A						FRACTURE ZONE						
				50'			GREY, COARSE FRAGS, NO HYD						

0 → 50

* When rock coring, enter rock brokeness.
** Include monitor reading in 6 foot intervals @ borehole. Increase reading frequency if elevated response read.

Drilling Area Background (ppm): ____

Remarks: All samples are for archive purposes only

Converted to Well: Yes ____ No ____ Well I.D. #: ____

BORING LOG

PROJECT NAME: GW INVEST. - NAS WILLOW GROVE
PROJECT NUMBER: N62472-03-D-0057
DRILLING COMPANY: EICHELBERGERS, INC.
DRILLING RIG: INGERSOLL RAND - T3W
BORING NUMBER: 01 MW 09
DATE: 11/01 + 11/03/05
GEOLOGIST: R. G. SCHAAR
DRILLER: D. NEY

Sample No. and Type or RQD	Depth (Ft.) or Run No.	Blows / 6" or RQD (%)	Sample Recovery / Sample Length	Lithology Change (Depth/Ft.) or Screened Interval	Soil Density/ Consistency or Rock Hardness	Color	Material Classification	USCS*	Remarks	PID/FID Reading (ppm) Sample	Sampler BZ	Borehole**	Drillar BZ**
						RED	FRACTURE ZONE						
							CONTINUED ?		YIELD 10				
							CLAY MINERALS		GPM				
A	60						STILL SAME		OVERPRESSURE				
							FRACTURE ZONE		ON DRILL STEM				
A	65			65'						PID			
							COMP. BEDROCK		REDUCTION	DEFECTIVE			
A	70						SANDSTONE		IN YIELD				
									(~5 GPM)				
							VERY COARSE FRAGS,						
A	75						RED, SOME MINERALIZ.						
							SHALE-TYPE CHARACT.						
A	80												
							NO LITH.						
							CHANGES						
A	85												
A	90												
							NO LITH						
A	95						CHANGES						
A	100												

50 ↑ ↓ 100

* When rock coring, enter rock brokenness.

** Include monitor reading in 6 foot intervals @ borehole. Increase reading frequency if elevated response read.

Drilling Area Background (ppm): ____

Remarks: ____

Converted to Well: Yes ____ No ____ Well I.D. #: ____

BORING LOG

PROJECT NAME: GW INVEST. - NAS WILLOW GROVE
PROJECT NUMBER: N62472-03-D-0057
DRILLING COMPANY: BICHELBERGERS, INC.
DRILLING RIG: INGERSOLL RAND - T3W
BORING NUMBER: 01MW09
DATE: 11/01 + 11/03/05
GEOLOGIST: R.G. SCHAAR
DRILLER: D. NEY

Sample No. and Type or RQD	Depth (Ft.) or Run No.	Blows / 6" or RQD (%)	Sample Recovery / Sample Length	Lithology Change (Depth/Ft.) or Screened Interval	Soil Density/ Consistency or Rock Hardness	Color	Material Classification	USCS	Remarks	PID/FID Reading (ppm) Sample	Sampler BZ	Borehole**	Driller BZ**
						RED	COARSE FRAGS		YIELD ~5GPM				
							WITH VARYING DEGREE						
A	105						OF MINERALIZATION						
							MINERALIZATION						
A	110						GENERALLY POOR TO						
							MODERATE,						
				115'			SHALE FROM ABV 90-						
A	115						115'?		SLIPPAGE ON				
						GREY	FINER FRAGS		DRILL STEM	PID			
A	120			120'			GREY COLOR,		(~2')	DEFECTIVE			
							MOD. MINERALIZ.		YIELD ~5GPM				
A	125						DEVOID OF Fe						
							INCREASING FINES						
				128'			W. MINERALIZATION						
A	130						120 - 128' INCREASING						
							COARSE CONTENTS BELOW						
							128'						
A	135						Fe CONTENT INCREASING						
							WITH DEPTH						
A	140						TRANSITION FROM GREY						
							INTO RED BY 145' SOME MINERALIZATION						
				144'			ZEOLITES LARGER		YIELD ~5GPM				
A	145					RED	FRAGS, INCREASED Fe		SLIGHT INCREASE				
							APPROACHING						
A	150			EOB			FRAC ZONE						

100 ↑ ↓ 150

* When rock coring, enter rock brokeness.

** Include monitor reading in 5 foot intervals @ borehole. Increase reading frequency if elevated response read.

Remarks:

Drilling Area Background (ppm):

Converted to Well: Yes ____ No ____ Well I.D. #: ____

BORING LOG

PROJECT NAME: GW INVEST. - NAS WILLOW GROVE
PROJECT NUMBER: N62472-03-D-0057
DRILLING COMPANY: EICHELBERGERS, INC.
DRILLING RIG: INGERSOLL RAND - T3W
BORING NUMBER: 01MW10
DATE: 11/01 + 11/02/05
GEOLOGIST: R.G. SCHAAR
DRILLER: D. NEY

Sample No. and Type or RQD	Depth (Ft.) or Run No.	Blows / 6" or RQD (%)	Sample Recovery / Sample Length	Lithology Change (Depth/Ft.) or Screened Interval	Soil Density/ Consistency or Rock Hardness	Color	Material Classification	USCS	Remarks	PID/FID Reading (ppm) Sample	Sample BZ	Borehole*	Drifter BZ**
					VERY LOOSE	BROWN	TOP SOIL WITH	SP		0.0			
							ORGANIC CONTENT				0.0	0.0	
A	S				LOOSE		INCREASING SILT			1.7		0.8	
				8'			W. DEPTH						
				9'		BROWN	WEATHERED BEDROCK		SHOTTER/	0.1			
									OVERPRESSURE		0.0	0.0	
									ON DRILL STEM				0.0
									BZ?		0.0		
													0.0
A	20	N.A.								0.0			
												0.0	
									OVERPRESSURE				0.0
									ON DRILL STEM		0.1		
						RED	INCREASING Fe			0.0		0.0	
													0.0
							INCREASING						
							MINERALIZATION		OVERPRESSURE		0.0		
							COARSER MATRIX		ON DRILL STEM	0.0			0.0
				~40'		LT BROWN	ZEOLITES/COMPL.		FRACTURE ZONE?	0.1		0.0	
				42'			MINERALIZATION						
				46'					INCREASED YIELD	0.0	0.0	0.0	0.0
									@ ~46' APX.			0.0	
A	50								10 GPM	0.0			0.0

0 ↑ ↓ 50

* When rock coring, enter rock brokeness.
** Include monitor reading in 6 foot intervals @ borehole. Increase reading frequency if elevated response read.

Remarks:

Drilling Area Background (ppm):

Converted to Well: Yes _____ No _____ Well I.D. #: _____

BORING LOG

PROJECT NAME: GW INVEST. - NAS WILLOW GROVE
PROJECT NUMBER: N62472-03-D-0057
DRILLING COMPANY: EICHELBERGERS, INC.
DRILLING RIG: INGERSOLL RAND - T3W
BORING NUMBER: 01 MW10
DATE: 11/01 + 11/02/05
GEOLOGIST: R. G. SCHAAR
DRILLER: D. NEY

Sample No. and Type or RQD	Depth (Ft.) or Run No.	Blows / 6" or RQD (%)	Sample Recovery / Sample Length	Lithology Change (Depth/Ft.) or Screened Interval	Soil Density/ Consistency or Rock Hardness	Color	Material Classification	USCS*	Remarks	PIDAID Reading (ppm) Sample	Sampler BZ	Borehole**	Drilled BZ**
A	50					LT BROWN	INCREASING		INCREASING	0.0			
						↓	CLAY MINERALS		YIELD >10GPM			01	
A	55					RED	AND Fe CONTENT		(>15GPM?)		0.0		0.0
A	60			60'			END OF FRACTURE		DECREASED	0.0		0.0	
							ZONE?		YIELD (<5GPM)	0.0			
											0.0	0.0	0.0
A	65						CONTINUED POORLY			0.0			
							MINERALIZED			0.0			0.0
A	70	N.A.		70'			SANDSTONE		SLIPPAGE ON	0.1		0.0	
							ZEOLITES ABUNDANT @		DRILL STEM				
							70' MATRIX INCREASINGLY		(APX 18")		0.0		
							FINER, Fe INCREASE		INCREASING				
									YIELD (>10GPM)			0.0	
							FRAGS INCREASINGLY			0.0			
							COARSE, TRANS INTO						
A	84					LT BROWN	SHALE		NO CHANGE	0.0		0.0	
A	85			85'			FRACTURED SHALE		IN YIELD ~10GPM				
						GRAY	W. CLAY MINERALS			0.0		0.0	
A	90			90'			DECREASE IN Fe						
							CONTENT						
							VERY COARSE FRAGS,			0.0		0.0	
A	95						ZEOLITES + CLAY						
							MINERALS						0.0
A	100					V					0.0		

50 ↑ ↓ 100

* When rock coring, enter rock brokeness.
** Include monitor reading in 6 foot intervals @ borehole. Increase reading frequency if elevated response read.

Drilling Area Background (ppm): ____

Remarks: ____

Converted to Well: Yes ____ No ____ Well I.D. #: ____

BORING LOG

PROJECT NAME: GW INVEST. - NAS WILLOW GROVE
PROJECT NUMBER: N62472-03-D-0057
DRILLING COMPANY: BICHELBERGERS, INC.
DRILLING RIG: INGERSOLL RAND - T3W

BORING NUMBER: 01 MW10
DATE: 11/01 + 11/02/05
GEOLOGIST: R. G. SCHAAR
DRILLER: D. NEY

Sample No. and Type or RQD	Depth (Ft.) or Run No.	Blows / 6" or RQD (%)	Sample Recovery / Sample Length	Lithology Change (Depth/Ft.) or Screened Interval	Soil Density/ Consistency or Rock Hardness	Color	Material Classification	USCS*	Remarks	PIDARD Reading (ppm) Sample	Sampler BZ	Borehole**	Drilling BZ**
A	100					LT BRWN	MED. TO COARSE			0.0			
							SANDST. FRAGS, ABUND.						0.0
A	105						ZEOLITES + CLAY MINERALS				0.0	0.0	
				108		RED	FRACTURE ZONE,		INCREASED	6.0			
							SEVERELY WEATHERED		YIELD (10-15				
							BEDROCK, ABUNDANT		GPM)		0.1	0.2	
							ZEOLITES + QUARTZ.			0.1			0.1
A	115			116'			INCREASING FE				0.1	0.1	
							CONTENT, SHALE						0.0
A	120	N.A.								0.0		0.0	
											0.0		
										0.0		0.0	
A	125								REDUCED				0.0
									YIELD (<5GPM)				
A	130			130			FE RICH SILTSTONE W.					0.0	
							FINER FRAGS AND			0.0			
							MOD. MINERALIZATION						0.0
A	135											0.0	
							NO CHANGES		OVERPRESSURE				
A	140								ON DRILL STEM	0.0		0.0	
											0.0		0.0
							LARGE FRAGMENTS		LOW YIELD				
A	145						(73") @ ~ 145'-150'		CONTINUES	0.0		0.0	
													0.0
											0.0		

100 ↑ ↓ 150

*When rock coring, enter rock brokeness.
** Include monitor reading in 6 foot intervals @ borehole. Increase reading frequency if elevated response read.

Remarks:

Drilling Area Background (ppm):

Converted to Well: Yes ____ No ____ Well I.D. #: ____

BORING LOG

PROJECT NAME: GW INVEST. - NAS WILLOW GROVE
PROJECT NUMBER: N62472-03-D-0057
DRILLING COMPANY: EICHELBERGERS, INC.
DRILLING RIG: INGERSOLL RAND - T3W
BORING NUMBER: 01 MW10
DATE: 11/01 + 11/02/05
GEOLOGIST: R. G. SCHAAR
DRILLER: D. NEY

Sample No. and Type or RQD	Depth (Ft.) or Run No.	Blows / 6" or RQD (%)	Sample Recovery / Sample Length	Lithology Change (Depth/Ft.) or Screened Interval	Soil Density/ Consistency or Rock Hardness	Color	Material Classification	USCS	Remarks	PID/FID Reading (ppm) Sample	Sampler BZ	Borehole**	Driller BZ**
						RED	NO CHANGES		LOW YIELD	0.0			
							SANDSTONE,		<5GPM				0.0
							MED. MINERALIZAT.					0.0	
										0.1			
											0.0		
									OVERPRESSURE		0.0		0.0
				164'			LARGE SANDSTONE		ON DRILL				
							FRAGMENTS,		STEM	0.0			
				168'			ZEOLITES + CLAY MN.				0.0	0.0	0.0
		N.A.					FRACTURE ZONE?						
							NO CHANGES			0.0	0.0		
												0.0	
A	175								OVERPRESSURE		0.0		0.0
									ON DRILL STEM	0.0		0.0	
						DRK BROWN	NO CHANGES IN						
							MINERALIZATION				0.0		0.0
							(SANDSTONE)				0.0		
A	185						Fe REDUCTION		SHUTTER ON	0.0		0.0	
									DRILL STEM				
A	190										0.0		0.0
						RED	INCRESING Fe						
							CONTENT,		YIELD MAINTAINS	0.1		0.0	
							NO CHANGES		@ <5GPM				
							OTHERWISE			0.0			0.0
												0.0	

150 ↑ ↓ 200

* When rock coring, enter rock brokeness.

** Include monitor reading in 8 foot intervals @ borehole. Increase reading frequency if elevated response read.

Drilling Area Background (ppm): ____

Remarks: ____

Converted to Well: Yes ____ No ____ Well I.D. #: ____

BORING LOG

PROJECT NAME: GW INVEST. - NAS WILLOW GROVE
PROJECT NUMBER: N62472-03-D-0057
DRILLING COMPANY: EICHELBERGERS, INC.
DRILLING RIG: INGERSOLL RAND - T3W

BORING NUMBER: 01 MW10
DATE: 11/01 + 11/02/05
GEOLOGIST: R. G. SCHAAR
DRILLER: D. NEY

Sample No. and Type or RQD	Depth (Ft.) or Run No.	Blows / 6" or RQD (%)	Sample Recovery / Sample Length	Lithology Change (Depth/Ft.) or Screened Interval	Soil Density/ Consistency or Rock Hardness	Color	Material Classification	USCS	Remarks	PID/FID Reading (ppm) Sample	Sampler BZ	Borehole*	Drillers BZ**
						RED	NO CHANGES IN			0.0			
							LITHOLOGY		OVERPRESSURE		0.0	0.0	
							STILL SANDSTONE		ON DRILL STEM				0.0
							W. POOR TO MOD.				0.0		
							MINERALIZATION			0.0			
									SHUTTER ON		0.0		0.0
									DRILL STEM			0.0	
											0.0		
				218			ZEOLITES, LARGE		Fe INCREASE	0.0			0.0
						GREY	FRAGMENTS						
				220							0.1		0.0
A	225			225'		GREY	CLAY MINERALS		NO CHANGE	0.0			
							AND COARSER		IN YIELD			0.0	
							FRAGMENTS		(CONTINUES @	0.0			0.1
							(FRACTURE ZONE?)		~5GPM)				
							Fe INCREASING IN				0.0		
A	235						DEPTH					0.0	
										0.0			
												0.0	
											0.0		
										0.1		0.1	
A	245						INCREASING				0.0		
							MINERALIZATION					0.0	
									"SHUTTER ON RIG"	0.0			0.0
A	250												

250

* When rock coring, enter rock brokenness.
** Include monitor reading in 6 foot intervals @ borehole. Increase reading frequency if elevated response read.

Drilling Area Background (ppm):

Remarks:

Converted to Well: Yes _____ No _____ Well I.D. #: _____

BORING LOG

PROJECT NAME: GW INVEST. - NAS WILLOW GROVE
PROJECT NUMBER: N62472-03-D-0057
DRILLING COMPANY: EICHELBERGERS INC.
DRILLING RIG: INGERSOLL RAND - T3W
BORING NUMBER: 01 MW10
DATE: 11/01 + 11/02/05
GEOLOGIST: R.G. SCHAAR
DRILLER: D. NEY

Sample No. and Type or RQD	Depth (Ft.) or Run No.	Blows / 6" or RQD (%)	Sample Recovery & Sample Length	Lithology Change (Depth/Ft.) or Expanded Interval	Soil Density/ Consistency or Rock Hardness	Color	Material Classification	USCS	Remarks	PID/FID Reading (ppm) Sample	Sampler BZ	Borehole**	Drilled BZ**
						RED	MOD. MINERALIZATION,					0.0	
							INCREASING			0.0			0.0
							Fe CONTENT					0.0	
									OVERPRESSURE				0.0
									ON DRILL	0.0			
									STEM				
												0.0	
				266'			LARGE SANDSTONE				0.1		
				268'			FRAGMENTS		INCREASED	0.1	0.1		0.0
							ZEOLITES ABUNDANT		YIELD (~10GPM)	0.1	0.1	0.1	
							FRACTURED BEDROCK		MAYBE 15GPM		0.1		0.1
							FRACTURE ZONE?		SHEEN ON	0.0		0.0	
									WATER @ 274'	0.0			0.0
				278'									
							COMP. BEDROCK,		REDUCTION			0.0	
							COMPLETE MINERAL.		IN YIELD				
A	284			284'		LIGHT ~~DARK~~			(<5GPM)	0.0			0.0
A	285			286'		BROWN	ZEOLITES PRESENT					0.0	
						GREY	MICRO-FRACTURES?						
A	290								OVERPRESSURE	0.0			0.0
							COMP. BEDROCK,		ON DRILL STEM			0.0	
							DEVOID OF						
A	295						ZEOLITES AND FE		H2O CLOUDY/ ~~CLEAR~~	0.0		0.0	
									MILKY/GREY		0.0		
A	300												0.0

250 ↑ ↓ 300

* When rock coring, enter rock brokenness.

** Include monitor reading in 6 foot intervals @ borehole. Increase reading frequency if elevated response read.

Drilling Area Background (ppm): ____

Remarks: ____

Converted to Well: Yes ____ No ____ Well I.D. #: ____

BORING LOG

PROJECT NAME: GW INVEST. - NAS WILLOW GROVE
PROJECT NUMBER: N62472-03-D-0057
DRILLING COMPANY: EICHELBERGERS, INC.
DRILLING RIG: INGERSOLL RAND - T3W

BORING NUMBER: 01 MW 10
DATE: 11/01 + 11/02/05
GEOLOGIST: R.G. SCHAAR
DRILLER: D. NEY

Sample No. and Type or RQD	Depth (Ft.) or Run No.	Blows / 6" or RQD (%)	Sample Recovery / Sample Length	Lithology Change (Depth/Ft.) or Screened Interval	Soil Density/ Consistency or Rock Hardness	Color	Material Classification	USCS*	Remarks	PID/FID Reading (ppm) Sample	Sampler BZ	Borehole**	Driller BZ**
						RED	COMP. BEDROCK						
							INCREASE IN Fe CONTENT		YIELD ~ 10 GPM				
A	310												
				312'			CLAY MINERALS, LARGER FRAGMENTS		INCREASE IN YIELD (~ 15 GPM)				
				316'			FRACTURE ZONE?						
		N.A.					COMP. BEDROCK Fe CONTENT SILTSTONE?		"SHUTTER" ON DRILL STRING	0.0			
									SHEEN ON WATER	0.0	0.1	0.1	0.1
A	325			⊕					INCREASE IN YIELD (10-15 GPM)	0.1		0.1	0.0
											0.1		0.0
A	335						NO CHANGES IN LITHOLOGY						
A	340								YIELD ~ 10 GPM				
A	350			EOB									

300 ↑ ↓ 350

*When rock coring, enter rock brokeness.
**Include monitor reading in 6 foot intervals @ borehole. Increase reading frequency if elevated response read.

Drilling Area Background (ppm):

Remarks:

Converted to Well: Yes _____ No _____ Well I.D. #: _____

APPENDIX F

U.S. GEOLOGICAL SURVEY
PACKER TESTING AT WILLOW GROVE NAS JRB
NOVEMBER 2005

01MW09

Two packers; 10 feet between bottom of upper packer and top of lower packer (notr: packer length is 7.5 ft)

Three zones:

Zone 3 - above 54 ftbls; **NO YIELD ZONE - NO SAMPLE**; lower centered packer at 54 ft bls; upper packer not inflated.

Zone 2 (sample ID 53.5-71.5) - fracture at 59-62 ftbls; upper packer centered at 53 ft bls; lower packer centered at 72 ft bls.

Zone 1 (sample ID 125) - fracture at 125 ft; upper packer centered at 119 ft bls; lower packer centered at 136 ft bls.

01MW10

Two packer settings:

A) 23 ft between bottom of upper packer and top of lower packer

B) 11 ft between bottom of upper packer and top of lower packer

Eight zones

Packer setting A (23 ft between bottom of upper packer and top of lower packer) -- center of upper packer at 65.5 ft bls.

Zone 8 (sample ID zone 8) - above 61 ft bls; inflate upper packer only; pump zone above packer.

Zone 7 (sample ID 66) - fracture at 71-86 ft bls; inflate both packers.

Packer setting B (11 ft between bottom of upper packer and top of lower packer); inflate both packers).

Zone 6 (sample ID 26) - fracture at 108-113 ft bls; center of upper packer at 102.5 ft bls.

Zone 5 (sample ID 145) - fracture at 153 ft bls; center of upper packer at 145.5 ft bls.

Zone 4 (sample ID 203.5) - fracture at 214 ft bls; center of upper packer at 203.5 ft bls.

Zone 3 (sample ID 226.5) - fracture at 233 ft bls; center of upper packer at 226.5 ft bls; low yield zone.

Zone 2 (sample ID 259) - fracture at 266-272 ft bls; center of upper packer at 259.5 ft bls.

Zone 1 (sample ID 301) - fracture at 311 ft bls; center of upper packer at 301.5 ft bls.

03MW-08

Packer spacing 11 ft bottom of upper packer to top of lower packer.

Six zones:

Zone 5 (sample ID 72) - fractures above 69 ft; upper packer centered at 72 ft and inflated; lower packer not inflated.

Zone 4 (sample ID 78) - fracture at 78-82 ft; upper packer centered at 72 ft; both packers inflated.

Zone 3 (sample ID 121) - fracture at 121 ft; upper packer centered at 114.5 ft.

Zone 2 (sample ID ___) - fracture at 139 ft; upper packer centered at 131.5 ft.

Zone 1 (sample ID ___) - fracture at 169 ft; upper packer centered at 158.5 ft.

Zone 0 (sample ID ___) - fractures below 180 ft; upper packer centered at 175 ft bls; lower packer not inflated.

Table 1
NAS JRB Willow Grove
Packer Sample
Analytical Results
November 2005

VOCs (µg/L)	Zone Fracture Location (at ft bls)	Acetone	Chloroform	1,1-Dichloroethane	1,1-Dichloroethene	cis-1,2-Dichloroethene	Tetrachloroethene	Toluene	1,1,1-Trichloroethane	Trichloroethene
01MW09										
Zone 3 (54') *	above 54'	NA	NA	NA	NA	NA	NA	NA	NA	NA
Zone 2 (53.5-71.5')	59-62'	ND	2.4	ND	ND	ND	ND	ND	ND	0.76 J
Zone 1 (125')	125'	6.2	3.4	ND	ND	0.71 J	4.1	1.1	ND	1.5
01MW10										
Zone 8 (>61')	above 61'	ND	ND	ND	ND	ND	ND	0.98 BJ	ND	ND
Zone 7 (66')	71-86'	3.3 J	ND	ND	ND	ND	9.8	0.66 BJ	ND	0.94 J
Zone 6 (28)	108-113'	9.0	ND	ND	ND	0.77 J	23	0.67 BJ	ND	2.3
Zone 5 (145')	153'	ND	7.1	ND	ND	3.4	62	ND	ND	4.5
Zone 4 (203.5')	214'	2.9 J	0.96 J	ND	ND	1.7	24	0.43 J	ND	2.8
Zone 3 (226.5')	233'	2.8 J	1.1	ND	ND	2.0	27	0.46 J	ND	3.6
Zone 2 (259')	266-272'	2.7 J	1.1	ND	ND	2.1	30	ND	ND	3.3
Zone 1 (301')	311'	3.1 J	1.0	ND	ND	2.0	30	ND	ND	3.3
03MW08										
Zone 5 (72')	above 69'	2.6 J	ND	ND	ND	ND	ND	2.9	ND	ND
Zone 4 (78')	78-82'	ND	ND	ND	ND	ND	ND	1.1	ND	ND
Zone 3 (121')	121'	ND	ND	2.2	1.2	0.49 J	1.8	0.66 J	1.1	0.89 J
Zone 2 (138')	138'	3.2 J	ND	4.0	2.2	0.81 J	1.6	0.96 J	2.1	1.6
Zone 1 (158')	169'	2.8 J	ND	9.3	5.7	1.6	1.7	0.67 J	5.3	3.5
Zone 0 (Zone OA)	below 180'	ND	ND	7.3	5.0	1.1	0.88 J	ND	4.5	2.4

*The yield for the zone was too low, so a sample was not collected.

Notes:
ND = Not Detected. Compound was analyzed for but not detected.
J = Analyte detected at a concentration between the detection limit and the reporting limit.
B = Analyte found in associated blank.
NS = Not sampled.
NA = Not available.

APPENDIX G

WELL NO.: [illegible]

Tetra Tech NUS, Inc.

BEDROCK
MONITORING WELL SHEET
WELL INSTALLED IN BEDROCK

PROJECT Willow Grove NAS JRB LOCATION Horsham Twnp PA
PROJECT NO. _____ BORING _____
DATE BEGUN 11/1/05 DATE COMPLETED 11/3/05
FIELD GEOLOGIST R.B. Schaar / ECOR Solutions
GROUND ELEVATION _____ DATUM _____

DRILLER Eichelberger
DRILLING METHOD Air Rotary
DEVELOPMENT METHOD _____

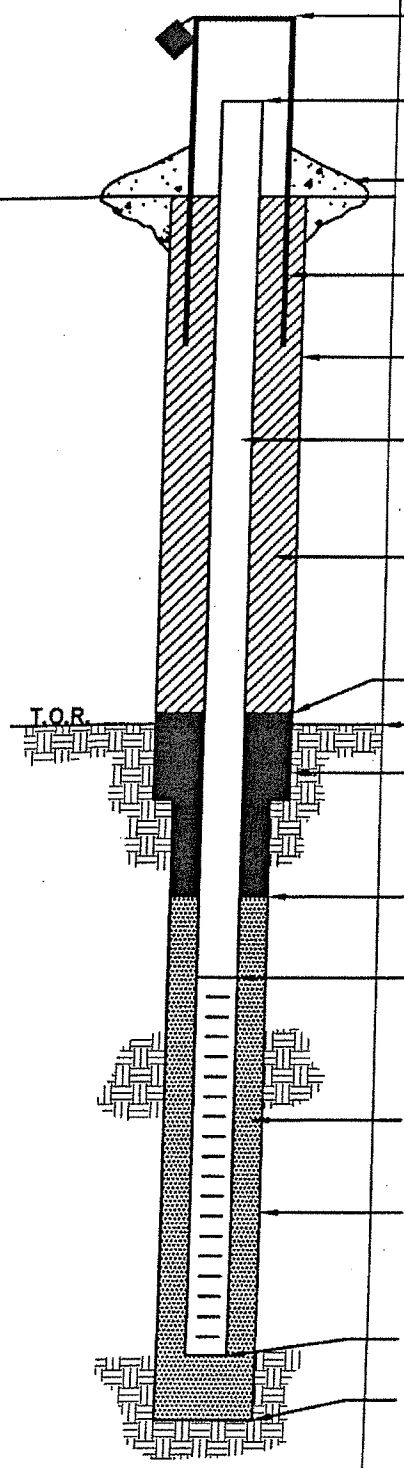

ELEVATION/HEIGHT OF TOP OF SURFACE CASING: /
ELEVATION/HEIGHT TOP OF RISER: /
TYPE OF SURFACE SEAL: _____
I.D. OF SURFACE CASING: 8"
DIAMETER OF HOLE: 12"
RISER PIPE I.D.: 4"
TYPE OF RISER PIPE: Sched 40 PVC
TYPE OF BACKFILL: 5% Bentonite/cement Grout
ELEVATION/DEPTH TOP OF SEAL: /110
ELEVATION/DEPTH TOP OF BEDROCK: 11
TYPE OF SEAL: Bentonite
ELEVATION/DEPTH TOP OF SAND: /115
ELEVATION/DEPTH TOP OF SCREEN: /120
TYPE OF SCREEN: Sched 40 PVC
SLOT SIZE x LENGTH: 0.020" x 10'
I.D. SCREEN: 4"
TYPE OF SAND PACK: No. 2
DIAMETER OF HOLE IN BEDROCK: 8"
CORE/REAM: _____
ELEVATION/DEPTH BOTTOM SCREEN: /130
ELEVATION/DEPTH BOTTOM OF SAND: /135
ELEVATION/DEPTH BOTTOM OF HOLE: /150
BACKFILL MATERIAL BELOW SAND: Bentonite

ACAD:FORM_MWINBR.dwg 07/20/99 INL

Tetra Tech NUS, Inc.

BEDROCK MONITORING WELL SHEET WELL INSTALLED IN BEDROCK

WELL IS CONSTRUCTED IN SAME borehole WITH 01MW10D

PROJECT Willow Grove NASJRB	LOCATION HORSHAM TWNP, PA	DRILLER Eichelberger
PROJECT NO.	BORING 01MW10	DRILLING METHOD AIR ROTARY
DATE BEGUN 11/1/05	DATE COMPLETED 11/2/05	DEVELOPMENT METHOD
FIELD GEOLOGIST R. G. Schoar / ECOR SOLUTIONS		
GROUND ELEVATION	DATUM	

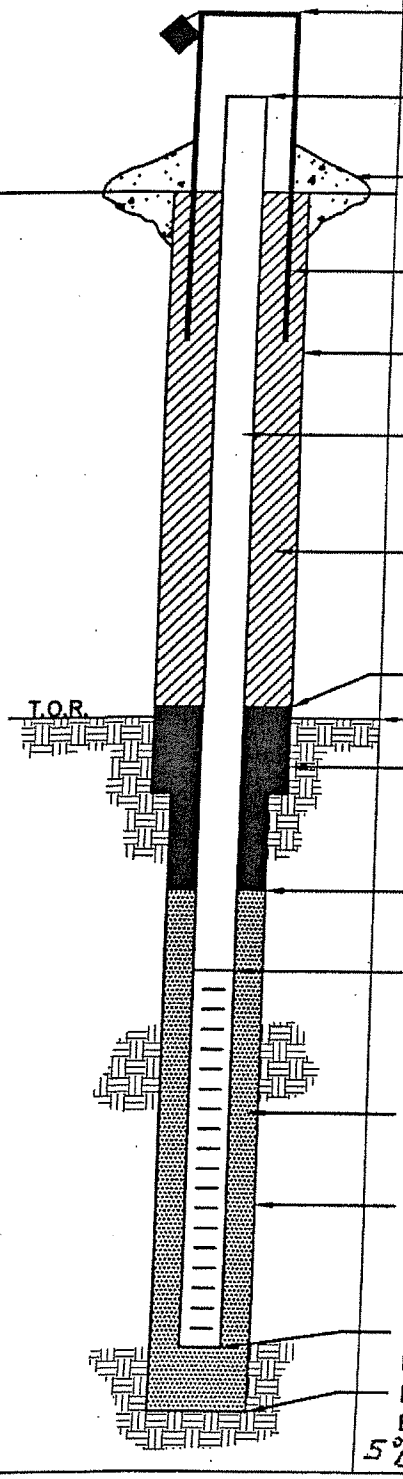

ELEVATION/HEIGHT OF TOP OF SURFACE CASING: /

ELEVATION/HEIGHT TOP OF RISER: /

TYPE OF SURFACE SEAL:

I.D. OF SURFACE CASING: 8"

DIAMETER OF HOLE: 12"

RISER PIPE I.D.: 2"
TYPE OF RISER PIPE: SCHED 40 PVC

TYPE OF BACKFILL: 5% Bentonite/cement Grout

ELEVATION/DEPTH TOP OF SEAL: /138

ELEVATION/DEPTH TOP OF BEDROCK: 9

TYPE OF SEAL: Bentonite

ELEVATION/DEPTH TOP OF SAND: /143

ELEVATION/DEPTH TOP OF SCREEN: /148
TYPE OF SCREEN:
SLOT SIZE x LENGTH: 0.020" X 10'
I.D. SCREEN: 2"

TYPE OF SAND PACK: No. 2

DIAMETER OF HOLE IN BEDROCK: 8"
CORE/REAM:

ELEVATION/DEPTH BOTTOM SCREEN: /158
ELEVATION/DEPTH BOTTOM OF SAND: /163
ELEVATION/DEPTH BOTTOM OF HOLE: /350
BACKFILL MATERIAL BELOW SAND: 5' bentonite, 5% bentonite/cement Grout To 290'

ACAD:FORM_MWINBR.dwg 07/20/99 INL

WELL NO.: _____

Well is constructed in same borehole with 01MW10S

Tetra Tech NUS, Inc.

BEDROCK MONITORING WELL SHEET WELL INSTALLED IN BEDROCK

PROJECT Willow Grove NAS JRB	LOCATION Horsham Twnp, PA	DRILLER Eichelberger
PROJECT NO.	BORING 01MW10	DRILLING METHOD Air Rotary
DATE BEGUN 11/1/05	DATE COMPLETED 11/2/05	DEVELOPMENT METHOD
FIELD GEOLOGIST R.G. Schaar/ECOR Solutions		
GROUND ELEVATION	DATUM	

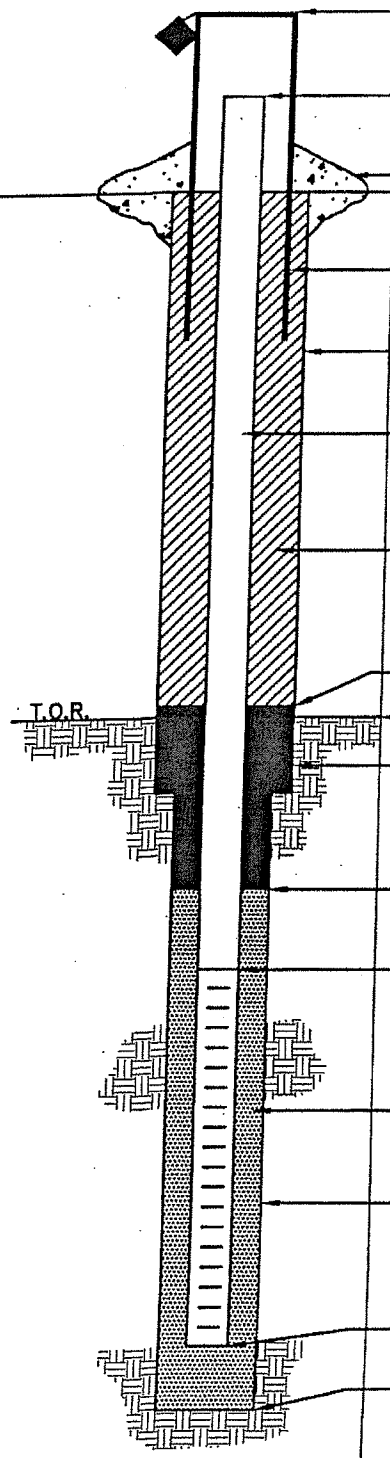

ELEVATION/HEIGHT OF TOP OF SURFACE CASING: /

ELEVATION/HEIGHT TOP OF RISER: /

TYPE OF SURFACE SEAL:

I.D. OF SURFACE CASING: 8"

DIAMETER OF HOLE: 12"

RISER PIPE I.D.: 2"

TYPE OF RISER PIPE: Sched 40 PVC

TYPE OF BACKFILL: 5% bentonite/cement grout to 163'

ELEVATION/DEPTH TOP OF SEAL: /290

ELEVATION/DEPTH TOP OF BEDROCK: 9

TYPE OF SEAL: Bentonite

ELEVATION/DEPTH TOP OF SAND: /295

ELEVATION/DEPTH TOP OF SCREEN: /300

TYPE OF SCREEN:

SLOT SIZE x LENGTH: 0.020" x 20'

I.D. SCREEN: 2"

TYPE OF SAND PACK: No. 2

DIAMETER OF HOLE IN BEDROCK: 8"

CORE/REAM:

ELEVATION/DEPTH BOTTOM SCREEN: /320

ELEVATION/DEPTH BOTTOM OF SAND: /320

ELEVATION/DEPTH BOTTOM OF HOLE: /350

BACKFILL MATERIAL BELOW SAND: Gravel

ACAD:FORM_MWINBR.dwg 07/20/99 INL

APPENDIX H

James M. Stewart, Inc. - Land Surveyors

9622 Evans Street Philadelphia Pennsylvania 19115

Telephone: 215-969-1577 Fax: 215-969-0338 Email: jmssurveys@comcast.net

Willow Grove Naval Air Station
Sites 01 & 03
Willow Grove - Pennsylvania

April 27, 2006

Project #: 3997
Horizontal Datum: Pennsylvania State Plane Coordinates NAD 83 - South Zone
Vertical Datum: NAVD 88
Monuments Used: Horizontal: NGS CORS (PARL1) / Vertical: NGS Pitcairn A (PID# KV2150)
Comments: Datums verified against existing data at Site 05 (Fire Training Area)

	Elevations			Coordinates			
Monitoring Wells	Ground	Inner	Protective	Northing	Easting	Date of Survey	Comments
03MW08D	364.25	365.63	365.91	324096.68	2694420.70	April 27, 2006	Common Protective Casing
03MW08S	364.25	365.59	365.91	324096.60	2694420.40	April 27, 2006	Common Protective Casing
01MW09	337.32	338.53	338.84	328398.75	2697345.48	April 27, 2006	
01MW10D	315.58	317.01	317.47	329322.44	2697389.56	April 27, 2006	Common Protective Casing
01MW10S	315.58	317.00	317.47	329322.57	2697389.70	April 27, 2006	Common Protective Casing

APPENDIX I

APPENDIX F
GROUNDWATER ANALYTICAL RESULTS SUMMARY
NAS JRB WILLOW GROVE, PA
Site 1 - January-February 2006

Well ID	Date Sampled	Acetone	CCl4	Chloroform	1,1-DCA	1,1-DCE	cis-1,2-DCE	Methylene Chloride	MTBE	Styrene	PCE	1,1,1-TCA	TCE	1,1,2-Trichloro-1,2,2-trifluoroethane	Toluene	Phenanthene	Naphthalene
01MW10S	2-Feb-06	ND	ND	4.5	ND	ND	2.6	3.0 B	ND	ND	20	ND	3.2	ND	0.24 J	-	-
01MW10D	3-Feb-06	2.6 J	ND	0.47 J	ND	ND	0.59 J	1.0 B	ND	ND	3.0	ND	0.88 J	ND	0.33 J	-	-
01MW09	7-Feb-06	ND	0.30 J	1.2	ND	ND	2.8	ND	ND	ND	6.8	ND	3.8	ND	ND	-	-
FD-1(03MW08S)	30-Jan-06	ND	ND	ND	ND	ND	ND	ND	ND	ND	ND	ND	ND	ND	ND	0.15J	ND
FD-2 (03MW02S)	6-Feb-06	ND	ND	ND	ND	ND	ND	ND	ND	ND	ND	ND	ND	ND	ND	-	-
FD-3 (03MW04S)	10-Feb-06	ND	ND	0.17 J	ND	ND	ND	ND	ND	ND	9.1	ND	ND	ND	ND	-	-
RB01300601	30-Jan-06	ND	ND	ND	ND	ND	ND	ND	ND	ND	ND	ND	ND	ND	ND	0.051 J	0.10 J
RB01310602	31-Jan-06	ND	ND	ND	ND	ND	ND	2.1 B	ND	0.60 J	ND	ND	0.45 J	ND	0.56 J	-	-
RB02010603	1-Feb-06	3.0 J	ND	ND	ND	ND	ND	2.6 B	ND	ND	ND	ND	0.37 J	ND	0.52 J	-	-
RB02020604	2-Feb-06	ND	ND	ND	ND	ND	ND	2.4 B	ND	0.53 J	ND	ND	0.40 J	ND	0.51 J	-	-
RB02030605	3-Feb-06	ND	ND	ND	ND	ND	ND	ND	ND	ND	ND	ND	ND	ND	0.22 J	-	-
RB02060606	6-Feb-06	ND	ND	ND	ND	ND	ND	ND	ND	ND	ND	ND	ND	ND	ND	-	-
RB02070607	7-Feb-06	ND	ND	ND	ND	ND	ND	ND	ND	0.67 J	ND	ND	ND	ND	0.45 J	-	-
RB02080608	8-Feb-06	ND	ND	ND	ND	ND	ND	ND	ND	ND	ND	ND	ND	ND	ND	-	-
RB02100609	10-Feb-06	ND	ND	ND	ND	ND	ND	ND	ND	ND	ND	ND	ND	ND	ND	-	-
Trip Blank	2-Feb-06	2.7 J	ND	ND	ND	ND	ND	3.2 B	ND	0.65 J	ND	ND	0.45 J	ND	0.47 J	-	-
Trip Blank	7-Feb-06	ND	ND	ND	ND	ND	ND	ND	ND	ND	ND	ND	ND	ND	ND	-	-
Trip Blank	10-Feb-06	ND	ND	ND	ND	ND	ND	ND	ND	ND	ND	ND	ND	ND	ND	-	-

Notes:
Only analytes detected in at least one sample are included on the table. Results are reported in ug/L.
ND: Compound Not Detected
J : Estimated value
B : Analyte was also found in the associated lab blank