N00158.AR.000236
NAS WILLOW GROVE
5090.3a

REMEDIAL INVESTIGATION ADDENDUM
for
SITE 5 - FIRE TRAINING AREA
GROUNDWATER (OU 2)

NAVAL AIR STATION
JOINT RESERVE BASE
WILLOW GROVE, PENNSYLVANIA

Naval Facilities Engineering Command
Mid-Atlantic

Contract Number N62472-03-D-0057
Contract Task Order 003

September 2006

PHIL-19612

REMEDIAL INVESTIGATION ADDENDUM
for
SITE 5 - FIRE TRAINING AREA
GROUNDWATER (OU 2)

NAVAL AIR STATION JOINT RESERVE BASE
WILLOW GROVE, PENNSYLVANIA

COMPREHENSIVE LONG-TERM
ENVIRONMENTAL ACTION NAVY (CLEAN) CONTRACT

Submitted to:
Naval Facilities Engineering Command Mid-Atlantic
9742 Maryland Avenue
Norfolk, Virginia 23511-3095

Submitted by:
Tetra Tech NUS, Inc.
600 Clark Avenue, Suite 3
King of Prussia, Pennsylvania 19406-1433

Contract No. N62472-03-D-0057
Contract Task Order 003

September 2006

PREPARED UNDER DIRECTION OF:

RUSSELL E. TURNER
PROJECT MANAGER
TETRA TECH NUS, INC.
KING OF PRUSSIA, PENNSYLVANIA

APPROVED FOR SUBMISSION BY:

JOHN J. TREPANOWSKI, P.E.
PROGRAM MANAGER
TETRA TECH NUS, INC.
KING OF PRUSSIA, PENNSYLVANIA

TABLE OF CONTENTS

SECTION		PAGE
1.0	INTRODUCTION	1
2.0	FIELD INVESTIGATION	2
3.0	SCOPE OF THE INVESTIGATION	3
4.0	SUMMARY OF FIELD INVESTIGATION	5
4.1	MONITORING WELL INSTALLATION	5
4.1.1	Borehole Drilling	5
4.1.2	Geophysical Borehole Logging	5
4.1.3	Aquifer-Isolation (Packer) Testing	6
4.1.4	Monitoring Well Installation and Development	7
4.2	GROUNDWATER ELEVATION MEASUREMENTS	7
4.3	GROUNDWATER SAMPLING AND ANALYSIS	8
5.0	RESULTS OF FIELD INVESTIGATION AND UPDATED CONCEPTUAL SITE MODEL	9
5.1	HYDROGEOLOGY	9
5.2	GROUNDWATER FLOW DIRECTIONS	10
5.3	NATURE AND EXTENT OF GROUNDWATER PLUME	10
6.0	EVALUATION OF NATURAL ATTENUATION (NA) OF CONTAMINANTS	13

APPENDICES

- **A SITE 5 BORING LOGS**
- **B MONITORING WELL INSTALLATION DETAILS**
- **C MONITORING WELL CONSTRUCTION DETAILS**
- **D SURVEY DATA**
- **E GROUNDWATER ELEVATION DATA**
- **F GROUNDWATER SAMPLE LOG SHEETS**
- **G ANALYTICAL DATA**

TABLES

NUMBER	
1	Construction Details for New Monitoring Wells Installed Summer 2005
2	Data Summary of Analytical Results Packer Test Samples
3	Data Summary of Analytical Results Monitoring Well Samples
4	Data Summary of Analytical Results Complete Data Set of Natural Attenuation Parameters - 2000 and 2005

TABLE OF CONTENTS (Continued)

FIGURES

NUMBER

1 Location of RI Sites
2 Monitoring Well Locations
3 Groundwater Elevation Map - Shallow Groundwater Zone
4 Groundwater Elevation Map - Intermediate Groundwater Zone
5 Total VOC Concentrations - Shallow Groundwater Zone
6 Total VOC Concentrations - Intermediate Groundwater Zone
7 Groundwater Detections Exceeding MCLs Summer 2005
8 Hydrogeologic Cross-Section B-B

ADDENDUM FOR REMEDIAL INVESTIGATION
SITE 5 - FIRE TRAINING AREA
NAS JRB WILLOW GROVE
HORSHAM TOWNSHIP, MONTGOMERY COUNTY, PENNSYLVANIA

1.0 INTRODUCTION

Tetra Tech NUS (TtNUS) performed additional investigation of the groundwater at Site 5 (the former Fire Training Area) at the Naval Air Station Joint Reserve Base (NAS JRAB) Willow Grove, Pennsylvania. The work was performed under Contract Task Order No. 003 under Contract N62472-03-D-0057, Comprehensive Long-Term Environmental Action - Navy (CLEAN), in accordance with the approved Work Plan Addendum for Remedial Investigation at Site 5 - Fire Training Area (Tetra Tech NUS, June 2005). This work complements the previous remedial investigation work that is documented in the Remedial Investigation Report for Site 5 - Fire Training Area (Tetra Tech NUS, February 2002).

The purposes of this groundwater investigation were to address regulatory concerns regarding the nature and extent of groundwater contamination at several currently unmonitored locations, to determine whether the chemical 1,4-dioxane is present in site groundwater, and to obtain supplemental chemical data needed for the evaluation of natural attenuation as a component of any groundwater remedy.

2.0 SITE DESCRIPTION AND SETTING

NAS JRB Willow Grove is located in Horsham Township, Montgomery County, Pennsylvania, approximately 20 miles north of the city of Philadelphia. NAS JRB Willow Grove occupies 1,000 acres of the 1,200 acres maintained by the Department of Defense at the Air Station, and the Willow Grove Air Reserve Station occupies the remaining 200 acres (see Figure 1). The Air Station is generally bounded by State Route 611 (Easton Road) to the east, State Route 463 (Horsham Road) to the southwest, and Keith Valley Road to the north.

Site 5 is located in the south-central portion of NAS JRB, approximately midway between Runway 10/28 and Horsham Road. The site is located immediately south of Taxiway Juliet, and covers an irregularly shaped area of approximately 1.25 acres. The training area was used from 1942 to 1975 for firefighting exercises, which included the disposal and burning of flammable liquid wastes generated by the Naval Air Station. Wastes including solvents, paint chemicals, xylenes, toluene, and various petroleum compounds were reportedly consumed at the rate of at least 4,000 gallons per year. Drums were reportedly stored in the vicinity of the burn ring during the periods between burning exercises.
Site 5 is comprised of flat to slightly rolling terrain, and is primarily covered by grasses, buildings, and a parking lot, with some woody and brushy vegetation present within the southern portion of the area.

3.0 SCOPE OF THE INVESTIGATION

The field investigation was designed to gather additional hydrogeological and chemical information to address the following data gaps concerning the nature and extent of the groundwater plume:

- Groundwater quality was not known downgradient from the source area in the direction directly along bedrock strike, a potential preferred pathway for groundwater and plume migration.

- Groundwater quality was not known in the direction directly down bedrock dip (at location 05MW12) within the equivalent stratigraphic interval that is monitored by the most highly-impacted well at the source area (05MW01S).

- The downgradient extent of the plume had not been identified. Groundwater quality was not known downgradient of well 05MW04I, which contained significant concentrations of VOCs and was the furthest downgradient monitoring point within the plume.

- The potential presence of 1,4-dioxane had not been investigated. Based on the historical concentrations of 1,1,1-TCA detected at the site, it was possible that 1,4-dioxane could be present.

- Additional groundwater chemical data were needed to further evaluate the potential inclusion of natural attenuation as a component of a groundwater remedy.

The following field investigation tasks were completed to address the identified data gaps:

- Monitoring Well Installation (see Section 4.1). Six new monitoring wells were installed at Site 5 at four locations (see Figure 2). Four of the wells were installed at two locations (05MW14 and 05MW15) downgradient from the source area and directly along bedrock strike, one of the wells was installed at a location (05MW12) directly down bedrock dip, and one of the wells was installed at a location (05MW13) hydraulically downgradient from location 05MW04. In addition, two new monitoring wells subsequently installed for additional investigation at Site 3 (see Figure 2 and TtNUS, December 2005) were integrated into the Site 5 investigation when it was determined that the groundwater at this hydraulically downgradient location was impacted by the Site 5 plume.

- Groundwater Elevation Measurements (See Section 4.2). Three synoptic rounds of groundwater elevation measurements were performed to refine the interpreted directions of groundwater flow, and to determine the impact of the additional data from the new wells on the site conceptual model.

- Groundwater Sampling and Analysis (See Section 4.3). All Site 5 monitoring wells were sampled for VOCs and 1,4-dioxane to determine the current nature and extent of the plume, and the newly-installed Site 5 monitoring wells were sampled for selected natural attenuation parameters to complement the data previously obtained from the existing wells. The Site 3 monitoring wells were sampled for multiple parameters as part of that site investigation, but only the VOC data are pertinent to this Site 5 report.

4.0 SUMMARY OF FIELD INVESTIGATION

4.1 MONITORING WELL INSTALLATION

The locations of all monitoring wells are illustrated on Figure 2. The rationale for each new Site 5 well location relative to the site conceptual model and to the identified data gaps is discussed briefly in Section 3.0, and in detail in the Work Plan Addendum (TtNUS, June 2005). The construction details for each well are summarized in Table 1.

Each drilling location was cleared for subsurface utilities by NAS JRB personnel, and by contacting the Pennsylvania One-Call utility clearing system.

4.1.1 Borehole Drilling

The drilling subcontractor was Talon Drilling Company of Trenton, New Jersey. The monitoring well boreholes were drilled by the air percussion drilling method. At three locations (05MW13, -14, and -15), an 8-inch I.D. steel casing was grouted into a 12-inch borehole that was drilled to a depth of approximately 10 to 15 feet into competent bedrock. At one location (05MW12), an 8-inch I.D. temporary steel casing was driven to a depth of 18 feet, and ultimately removed during the well building (retrofitting) activities. At each location, a nominal 8-inch diameter borehole was drilled out of the casing to the total depth of the borehole.

The boreholes were logged by a TtNUS geologist. The geologist described the lithology of the rock cuttings at a maximum interval of 5 feet, or at shorter intervals if significant lithologic changes were noted. The geologist also monitored the borehole for organic vapors with a photoionization detector (PID). Site 5 boring logs are included in Appendix A.

4.1.2 Geophysical Borehole Logging

The open-bedrock boreholes were geophysically logged by the United States Geological Survey (USGS) under their interagency agreement with the Navy. The boreholes were logged a minimum of 2 days after their drilling completion to allow the borehole parameters to return to ambient conditions. The borehole logs generated by the USGS included the following:

- Caliper
- Natural gamma
- Single point resistance

- Fluid temperature
- Fluid conductivity
- Fluid velocity by heat pulse flowmeter under pumped and non-pumped conditions
- Borehole television
- Digital acoustic televiewer

The documentation of the borehole logging program will be provided in a separate report to be published by the USGS.

4.1.3 Aquifer-Isolation (Packer) Testing

The boring logs generated by TtNUS and the geophysical logs generated by the USGS were reviewed by the Navy, EPA, TtNUS, and the USGS. For each borehole, several vertical intervals were identified as potential screen zones for the permanent monitoring wells to be built in the boreholes. Because the selection of the zone to be screened was not unequivocal, packer testing of the potential zones was performed to determine the VOC concentrations of those zones. The Site 5 unvalidated laboratory analytical results from the packer tests are summarized in Table 2.

The packer tests were performed by the USGS. Inflatable straddle packers were used to isolate the water-bearing zones of interest, and a submersible pump was used to obtain groundwater samples from these zones. TtNUS collected the groundwater samples and submitted them via overnight air courier to a Navy-approved laboratory for low-concentration VOC analyses on a quick-turnaround (48-hour) schedule. The VOC samples were analyzed by laboratory analytical method SW-846 Method 8260B. The analytical data from the packer samples was used for field screening purposes only, and therefore was not validated.

In addition to obtaining the groundwater samples, the USGS investigated the hydraulic connection between the pumped interval and other stratigraphic intervals in both the packered well and adjacent wells by installing pressure transducers in those wells, and monitoring the water level changes induced by the pumping.

The documentation of the aquifer isolation tests will be provided in a separate report to be published by the USGS.

4.1.4 Monitoring Well Installation and Development

Each borehole was retrofitted with a screened monitoring well that was constructed to monitor the groundwater from a specific vertical interval. The interval to be monitored in each borehole was generally based upon the approximate depths where hydrogeological and chemical data were needed to fill the data gaps at that location, and was specifically based upon the evaluation criteria discussed above, including the boring logs, geophysical logs, and packer test results. Well construction details for the new monitoring wells are summarized in Table 1. Well construction diagrams are included in Appendix B and construction details for all Site 5 monitoring wells are summarized in Appendix C.

The monitoring wells were constructed with 2-inch-diameter, flush-joint and threaded PVC well casing and 2-inch-diameter, Schedule 40, 0.020-inch slotted well screen that is fitted with a bottom cap. At three of the four locations, the screen was placed in the bottom of the borehole. At location 05MW13, the interval to be screened was above the bottom of the borehole, and the space between the bottom of the borehole and the bottom of the screen and filter pack was sealed with bentonite. The annular space between the well screen and the borehole was packed with No. 2 quartz sand to a height of at least 3 feet above the top of the screen, and a bentonite seal with a minimum thickness of 3 feet was emplaced above the sand pack. At locations 05MW14 and 05MW15, a shallow well was installed within the same borehole as the deeper well through these same installation methods. The remainder of the annular space from the bentonite seal to the ground surface was grouted with a 5% bentonite/cement grout. The monitoring wells were subsequently developed with a submersible pump, and the reference elevations established by James M. Stewart, Inc., a Pennsylvania-licensed surveyor. The elevations are listed in Table 1, and the complete list of Site 5 survey data is included in Appendix D.

4.2 GROUNDWATER ELEVATION MEASUREMENTS

Three synoptic rounds of water-level elevation measurements were performed. One round was obtained immediately prior to the Site 5 groundwater sampling task on 16 August 2005, and one round was obtained at the conclusion of the sampling task on 25 August 2005. A third synoptic round was obtained on 05 May 2006 from all Site 5 wells and the Site 3 well cluster (03MW08S and 03MW08D), after it was determined that data from the Site 3 location would be pertinent to this Site 5 investigation. The elevations were obtained during a day of no precipitation, and at least 24 hours after the conclusion of any precipitation event. The groundwater elevation data are included in Appendix E, and are interpreted and discussed in Section 5.0.

4.3 GROUNDWATER SAMPLING AND ANALYSIS

All Site 5 monitoring wells (a total of 33 wells, including the 27 existing wells and the 6 newly-installed wells) were sampled for low-concentration TCL VOCs and 1,4-dioxane. The Site 5 sample log sheets are included in Appendix F. The analytical data are summarized in Table 3. The complete set of validated analytical data is presented in Appendix G.

- Low-concentration TCL VOC analyses were performed by SW-846 Method 8260B. A detection limit of <1 ug/L was achieved for most compounds.

- 1,4-dioxane analyses were performed by SW-846 Method 8270C. A detection limit of 2.1 ug/L was achieved for most of the analyses.

Samples from the six new Site 5 monitoring wells were also analyzed in the laboratory for select natural attenuation parameters to supplement the existing data previously collected from other site wells.

- Nitrate analysis by IC Method 300.
- Sulfate analysis by IC Method 300.
- Methane analysis by Robert S. Kerr (RSK) Method RSKSOP-147/175.
- Ethane analysis by Robert S. Kerr (RSK) Method RSKSOP-147/175.
- Ethene analysis by Robert S. Kerr (RSK) Method RSKSOP-147/175.
- Total Organic Carbon (TOC) analysis by SW 846 Method 9060.
- Chloride analysis by SW 846 Method 9050 or IC Method 300.
- Oxidation/Reduction Potential (ORP) by ASTM Method D1498.

Samples from all monitoring wells were analyzed in the field for the following parameters.

- Dissolved oxygen (meter)
- pH
- temperature
- conductivity (meter)

Groundwater samples were obtained by the low-flow purging and sampling method following EPA Region 3 guidelines (Bulletin QAD023 - June 16, 1999). The new monitoring wells were sampled a minimum of 2 weeks after their development. The groundwater analytical data were validated by TtNUS following the standard EPA national and regional protocol.

5.0 RESULTS OF FIELD INVESTIGATION AND UPDATED CONCEPTUAL SITE MODEL

5.1 HYDROGEOLOGY

NAS JRB Willow Grove is located within the Triassic Basin of southeastern Pennsylvania, in the Gettysburg-Newark Lowland Section Physiographic Province. The bedrock underlying the site consists of the middle arkose member of the Stockton Formation, which locally is about 5,000 feet thick and is unconformably underlain by Ordovician to PreCambrian-age basement rocks.

The results from previous investigations indicated that the thickness of the overburden, or the depth to the top of weathered bedrock, ranged from about 7 to 18 feet. The thickness of the overburden at the four new localities ranged from 7 feet (at 05MW12) to 12 feet (at 05MW14), or within the previously established range of thickness. The overburden generally consists of silty clay to clayey silt, with minor amounts of silty sand.

The bedrock lithologies encountered during the current investigation (see boring logs in Appendix A) were consistent with the lithologies encountered during previous investigations. The bedrock is characterized by a predominantly coarse-grained lithology, and typically consists of alternating sequences of siltstone and sandstone. Thin but laterally persistent beds of finer-grained mudstone and claystone are located within the lower portions of the monitored section. A reddish-brown claystone that occurs at a subsurface depth of about 100 feet beneath the source area is fairly correlatable throughout the site, and was encountered at the new Site 5 locations at depths consistent with the previously-established bedrock dip of 7° NW. This lithologic unit serves as a site marker bed for subsurface correlations, although the uncertainty in the correlations increases with increasing distance from the source area. The claystone was not identified at the Site 3 location 03MW08.

Consistent with previous investigations, almost all of the groundwater in the borings was encountered at discrete fractures or fracture intervals. The primary porosity of the various lithologic units (particularly the sandstones) most likely contributed some groundwater to each borehole, but the volume or yield could not be quantified (either by the rig geologist or by the flow logs) due to the low volume of groundwater entering the borehole through the primary pore spaces relative to the volume of groundwater entering through the secondary openings. The depth to groundwater throughout most of the site generally ranges from about 20 to 30 feet except for the lower topographic elevations (at 05MW011 and 05MW15), where the depth to groundwater is less than 15 feet.

5.2 GROUNDWATER FLOW DIRECTIONS

The groundwater flow directions for the shallow and intermediate zones are illustrated in Figure 3 (shallow zone) and Figure 4 (intermediate zone). The maps were constructed using the groundwater elevations measured 05 May 2006. These results are similar to the site-specific groundwater flow directions interpreted for the RI report, and to the regional groundwater flow directions that have been interpreted by the USGS. These results indicate that the additional hydraulic head data obtained from the new monitoring wells have confirmed the previous interpretations.

The contour maps indicate that the site is underlain by a local groundwater divide within the shallow groundwater zone and a regional groundwater divide within the intermediate groundwater zone, and that the groundwater flow directions beneath the site vary with depth. Groundwater at the water table and within the shallow groundwater zone (which is most directly influenced by surface topography) flows in an overall southeastward to southwestward direction, depending on surface location. A groundwater divide at the water table generally coincides with the location and orientation of the runway, and indicates that the shallow groundwater beneath Site 5 does not migrate toward Site 3. Groundwater flow within the intermediate zone is influenced by the regional groundwater divide, which trends southwest-northeast through the area and lies just to the east of the source area (or well cluster 05MW01). To the west of the divide, groundwater at Site 5 flows in a generally west-northwest direction (toward Site 3), and to the east of the divide, groundwater flows in a generally east-southeast direction.

The results of this investigation indicate that the horizontal hydraulic gradients throughout the site are very low, which is similar to the results from previous investigation. For the shallow zone, the horizontal hydraulic gradient ranges from about 0.01 ft/ft to 0.001 ft/ft (depending on topographic location), and for the intermediate zone, the horizontal hydraulic gradient is about 0.001 ft/ft. Based on the groundwater elevations measured at the well cluster locations, the overall vertical hydraulic gradient is oriented downward throughout most of the site, although the borehole flow logs also indicate that within any particular borehole, the vertical flow may be upward, downward, or (in some cases) both. Previously, it was believed that the claystone may have acted as a semi-confining unit controlling vertical flow, but the results of the current investigation do not support this hypothesis.

5.3 NATURE AND EXTENT OF GROUNDWATER PLUME

Remedial investigation activities conducted to date indicate that the source of the VOC plume is the former drum storage area located northwest of the burn ring, near monitoring well cluster 05MW01.

Historically, the highest total VOC concentrations are detected in the shallow well at that cluster (05MW01S), which is screened across the water table.

The analytical results are presented in Table 3 (summarized) and Appendix G (complete data set), and the current extent of the plume is illustrated in Figure 5 (shallow groundwater) and Figure 6 (intermediate groundwater). The detections exceeding the Maximum Contaminant Level (MCL) concentrations are illustrated in Figure 7. Consistent with previous investigations, the migration pathway of the dissolved-phase plume is consistent with the groundwater flow directions. Within the shallower aquifer (at and just below the water table), the plume flows in a generally south to southwest direction, as it also migrates downward within the aquifer. As a result, the highest total VOC concentrations within the intermediate depths of the aquifer (about 100 to 150 feet) are detected at monitoring well cluster 05MW10. By this depth, however, the plume is also influenced by the regional groundwater divide and the position of the plume relative to the divide. As illustrated in Figure 6, the direction of plume migration within the intermediate depths of the aquifer is toward the west-northwest, or parallel to the direction of groundwater flow.

The results of the current investigation confirm that the plume is migrating to the northwest, and that the axis of the plume passes near cluster location 05MW04. Because of the VOC concentrations detected at 05MW04, the new monitoring well cluster 05MW13 was installed downgradient of 05MW04 to identify the distal end (or downgradient extent) of the plume. The total VOC concentration of 105 ug/L in 05MW13I (including detections of TCE and 1,1-DCE above their respective MCL), however, indicated that the downgradient extent of the plume had not been identified, and that it existed some distance northwest of well cluster 05MW13.

Monitoring well cluster 03MW08 (a shallow and deep well) was installed subsequent to the Site 5 investigation as an upgradient monitoring location for Site 3. However, the hydraulic head data obtained from these wells also indicates that the cluster is located nearly directly downgradient from the Site 5 source area. No VOCs were detected in the shallow well, and a total VOC concentration of 14.8 ug/L (with no individual detections above their MCL) was detected in the deep well. The VOC concentrations and their vertical position within the aquifer are consistent with the conclusion that although 03MW08 is a Site 3 well cluster, it is also located in an appropriate position to identify and monitor the downgradient edge of the Site 5 groundwater plume.

Monitoring wells at locations 05MW14 and 05MW15 were installed along bedrock strike from the source area to investigate if the strike of the bedrock (bedding plane partings) were a preferred avenue for groundwater and plume migration. The lower concentrations of VOCs at these locations relative to

05MW04 and 05MW13 indicate that the strike of the bedrock is not exerting a major structural control on the migration of the plume.

The new shallow monitoring well at cluster location 05MW12 was installed directly downdip from the source area. This well was screened across the same stratigraphic interval that is monitored by 05MW01S (which is the site's most highly impacted well) to investigate if the dip of the bedrock was a preferred avenue for contaminant migration, particularly if a non-aqueous (DNAPL) solvent phase ever existed. The low concentration of total VOCs at 05MW12S indicate that the dip of the bedrock is not exerting a major structural control on the migration of the plume.

The updated hydrogeologic cross-section is presented in Figure 8. As discussed, the highest VOC concentrations are detected at the water table in the vicinity of the source area (05MW01S). As the groundwater flows away from the source area, the dissolved-phase plume migrates downward within the aquifer in response to the hydraulic gradient. The plume extends to the northwest beyond 05MW13, and attenuates in the immediate vicinity (or just downgradient) of 03MW08. Previously, the vertical migration of the plume was thought to be attenuated to some degree by the persistent claystone, but the results of the current investigation (particularly the VOC detections from packer-tested intervals below the claystone) indicate that the claystone does not impede, or exert a significant influence on the migration of the plume.

All Site 5 monitoring well samples were analyzed for 1,4-dioxane for the first time. Based on the historical concentrations of 1,1,1-TCA detected at the site, it was determined that 1,4-dioxane (a stabilizer commonly associated with 1,1,1-TCA, but not amenable to many VOC treatment technologies) may also be present. The only detection of 1,4-dioxane occurred at 05MW01S (the shallow well at the source area), with a concentration of 13 ug/L (and 12 ug/L in a field duplicate sample), which exceeds the EPA Region 3 risk-based concentration (RBC) of 6.1 ug/L. Well 05MW01S also historically has the highest concentrations of 1,1,1-TCA, including 930 ug/L for this current round.

6.0 EVALUATION OF NATURAL ATTENUATION (NA) OF CONTAMINANTS

Groundwater samples from the five newly installed wells were submitted for laboratory analysis of typical NA parameters to gauge the natural conditions governing biological degradation in the Site 5 groundwater plume. Laboratory NA parameter results from the new monitoring well samples are presented in Table 3. These data, which were similar to the results previously obtained from other monitoring wells, were combined with the historical NA data to evaluate the propensity for natural biological degradation in the Site 5 groundwater regime. The new (combined) data set is presented in Table 4. These data were evaluated relative to the EPA "lines of evidence" evaluation protocol presented in the EPA Office of Solid Waste and Emergency Response (OSWER) Monitored Natural Attenuation, Directive 9200.4-17P, dated April 21, 1999, pages 13 to 16.

Hydrogen concentrations were high and most oxygen concentrations were below 5 mg/L, indicating that anaerobic conditions prevail at many of the sample locations. Based on the preliminary screening for anaerobic biodegradation process in Table 2.3 of EPA's Technical Protocol for Evaluating Natural Attenuation of Chlorinated Solvents in Ground Water, there is "limited evidence" of anaerobic biodegradation of chlorinated organics. The Site 5 groundwater contaminated plume scores 9 points, using 05MW02S as a background well. The score is based on the following results:

1 point for alkalinity,
2 points for nitrate,
2 points for chloride,
3 points for hydrogen, and
1 point for carbon dioxide.

The current (2005) sampling data continue to show a decreasing concentration trend for 1,1,1-TCA in parts of the aquifer, except at 05MW10S, where 1,1,1-TCA has increased. Well clusters 05MW09 and 05MW10 are located downgradient of the suspected source area at 05MW01. Monitoring well clusters 05MW09 and 05MW10 show minor increasing concentrations of 1,1-DCA, 1,1-DCE, TCE, 1,1,2-TCA and cis-1,2-DCE.

Analytical data for each well shows a decreasing concentration trend for 1,1,1-TCA in all samples, and in most cases the daughter products are decreasing as well. Based on the three-tiered EPA "lines of evidence" approach, the site analytical data show a decrease in contaminant mass, and the hydrogeologic data show low flow through the aquifers, implying that anaerobic biological remediation activity is occurring at the site.

Remediation of chlorinated solvents in parts of the groundwater plume is favored by natural conditions. If relying solely on biologically mediated natural attenuation, the groundwater remediation could take a long time to meet human health-based remediation goals due to limited site conditions that favor natural biological degradation. However, the natural biological degradation of the chlorinated solvents could be enhanced by a variety of commercially available systems. The evaluation of the RI data indicates that if enhanced methods (such as providing carbon metabolic substrate) are used, natural attenuation could be an applicable component of any proposed remedial alternative.

TABLES

TABLE 1

CONSTRUCTION DETAILS FOR NEW MONITORING WELLS INSTALLED SUMMER 2005
NAS JRB WILLOW GROVE
SITE 5 - FIRE TRAINING AREA

WELL	BOREHOLE DEPTH (ft)	SCREENED INTERVAL (ft)	SAND-PACK INTERVAL (ft)	ELEVATION	
				GROUND	PVC CASING
05MW12S	70	50 - 70	46 - 70	364.47	365.90
05MW13I	180	127 - 142	122 - 150	362.85	363.88
05MW14S	150	36 - 66	32 - 75	358.71	359.81
05MW14I		130 - 150	125 - 150		359.84
05MW15S	150	30 - 45	27 - 50	353.82	354.61
05MW15I		140 - 150	135 - 150		354.55

SITE 3 - NINTH STREET LANDFILL

WELL	BOREHOLE DEPTH (ft)	SCREENED INTERVAL (ft)	SAND-PACK INTERVAL (ft)	ELEVATION	
				GROUND	PVC CASING
03MW08S	225	38 - 68	33 - 73	364.25	365.59
03MW08D		163 - 173	158 - 178		365.63

TABLE 2

DATA SUMMARY OF ANALYTICAL RESULTS
PACKER TEST SAMPLES
NAS JRB WILLOW GROVE SITE 5 - FORMER FIRE TRAINING AREA

Sample ID:	05MW12S		05MW12S		05MW14I		05MW14I		05MW-DUP01		05MW14I		05MW15I		05MW15I-DL		05MW15I		05MW15I-DL		05MW15I	
Sample Date:	07/11/05		07/11/05		07/13/05		07/12/05		07/12/05		07/13/05		07/14/05		07/14/05		07/15/05		07/15/05		07/19/05	
Dup Of:							05MW-DUP01		05MW14I													
Depth (feet):	0-48		48-70		0-65		75-90		75-90		120-150		0-50		0-50		120-130		120-130		130-150	
VOLATILES	ug/L		ug/L		ug/L		ug/L		ug/L		ug/L		ug/L		ug/L		ug/L		ug/L		ug/L	
1,1,1-Trichloroethane		U		U	13		33		31		18			U		U	0.48	J		U	1	
1,1,2,2-Tetrachloroethane		U		U		U		U		U		U		U		U		U		U		U
1,1,2-Trichloroethane		U		U		U	0.42	J	0.43	J	0.3	J		U		U		U		U		U
1,1,2-Trichlorotrifluoroethane		U		U		U		U		U		U		U		U		U		U		U
1,1-Dichloroethane		U	0.46	J	6.7		16		16		9.2			U		U	0.34	J		U	0.75	J
1,1-Dichloroethene		U		U	12		28		27		17			U		U	0.77	J		U	1.8	
1,2,4-Trichlorobenzene		U		U		U		U		U		U		U		U		U		U		U
1,2-Dibromo-3-chloropropane		U		U		U		U		U		U		U		U		U		U		U
1,2-Dibromoethane		U		U		U		U		U		U		U		U		U		U		U
1,2-Dichlorobenzene		U		U		U		U		U		U		U		U		U		U		U
1,2-Dichloroethane		U		U		U		U		U		U		U		U		U		U		U
1,2-Dichloroethene (cis)		U		U	1.2		2.7		2.6		1.6			U		U		U		U		U
1,2-Dichloroethene (trans)		U		U		U		U		U		U		U		U		U		U		U
1,2-Dichloropropane		U		U		U		U		U		U		U		U		U		U		U
1,3-Dichlorobenzene		U		U		U		U		U		U		U		U		U		U		U
1,4-Dichlorobenzene		U		U		U		U		U		U		U		U		U		U		U
1,4-Dioxane		U		U		U		U		U		U		U		U		U		U		U
2-Butanone		U		U		U		U		U		U		U		U		U		U		U
2-Hexanone		U		U		U		U		U		U		U		U		U		U		U
4-Methyl-2-pentanone		U		U		U		U		U		U		U		U		U		U		U
Acetone		U		U		U		U		U		U		U		U		U		U		U
Benzene		U		U		U		U		U		U		U		U		U		U		U
Bromodichloromethane		U		U		U		U		U		U		U		U		U		U		U
Bromoform		U		U		U		U		U		U		U		U		U		U		U
Bromomethane		U		U		U		U		U		U		U		U		U		U		U
Carbon Disulfide		U		U		U		U		U		U		U		U		U		U		U
Carbon Tetrachloride		U		U		U		U		U		U		U		U		U		U		U
Chlorobenzene		U		U		U		U		U		U		U		U		U		U		U
Chloroethane		U		U		U		U		U		U		U		U		U		U		U
Chloroform		U		U		U		U		U		U		U		U		U		U		U
Chloromethane		U		U		U		U		U		U		U		U		U		U		U
cis-1,3-Dichloropropene		U		U	0.42	J		U		U		U		U		U		U		U		U
Cyclohexane		U		U		U		U		U		U		U		U		U		U		U
Dibromochloromethane		U		U		U		U		U		U		U		U		U		U		U
Dichlorodifluoromethane		U		U		U		U		U		U		U		U		U		U		U
Ethylbenzene		U		U		U		U		U		U		U		U		U		U		U
Isopropylbenzene		U		U		U		U		U		U		U		U		U		U		U
M+p-xylenes		U		U		U		U		U		U		U		U	0.34	J		U		U
Methyl Acetate		U		U		U		U		U		U		U		U		U		U		U
Methyl Cyclohexane		U		U		U		U		U		U		U		U	0.5	J		U		U
Methyl Tert-butyl Ether		U		U		U		U		U		U		U		U		U		U		U
Methylene Chloride	0.63	JB	0.72	JB	0.52	J	0.61	JB	0.66	JB		U		U	2.6	JDB	0.56	JB		U		U
O-xylene		U		U		U		U		U		U		U		U		U		U		U
Styrene		U		U		U		U		U		U		U		U		U		U		U
Tetrachloroethene		U	0.38	J	0.35	J	0.72	J	0.72	J	0.58	J		U		U		U		U		U
Toluene	4.1		0.86	J	27		2.6		2.5		2.2		52	E	45	D	98	E	77	D	2.8	
trans-1,3-Dichloropropene		U		U		U		U		U		U		U		U		U		U		U
Trichloroethene		U		U	4.8		11		11		7.7			U		U	0.3	J		U	0.62	J
Trichlorofluoromethane		U		U		U		U		U		U		U		U		U		U		U
Vinyl Chloride		U		U		U		U		U		U		U		U		U		U		U
Xylene (Total)		U		U		U		U		U		U		U		U		U		U		U

TABLE 3

DATA SUMMARY OF ANALYTICAL RESULTS
MONITORING WELL SAMPLES
NAS JRB WILLOW GROVE SITE 5 - FORMER FIRE TRAINING AREA

Sample ID:	05-MW01-I		05-MW01-S		05-MW01-S-D		05-MW01-SI		05-MW02-S		05-MW03-I		05-MW03-I-D		05-MW03-S		05-MW04-I		05-MW04-S		05-MW05-I	
Sample Date:	08/17/05		08/18/05		08/18/05		08/18/05		08/17/05		08/16/05		08/16/05		08/16/05		08/16/05		08/16/05		08/10/05	
Dup Of:					05-MW01-S								05-MW03-I									
SEMIVOLATILES	ug/L		ug/L		ug/L		ug/L		ug/L		ug/L		ug/L		ug/L		ug/L		ug/L		ug/L	
1,4-Dioxane	2.1	U	13		12		2.1	U	2.1	U	2.1	U	2.1	U	2.1	U	2.1	UL	2.1	U	2.1	U
VOLATILES	ug/L		ug/L		ug/L		ug/L		ug/L		ug/L		ug/L		ug/L		ug/L		ug/L		ug/L	
1,1,1-Trichloroethane	0.45	J	930		960		15		0.16	U	1.3		1.3		0.16	U	25		0.16	U	0.16	U
1,1,2-Trichloroethane	0.11	U	23		22		0.66	J	0.11	U	0.11	U	0.11	U	0.11	U	0.7	J	0.11	U	0.11	U
1,1-Dichloroethane	0.85	J	480		500		26		0.17	U	5.7		5.7		0.17	U	24		0.17	U	0.17	U
1,1-Dichloroethene	0.41	J	180		190		12		0.19	U	1.8		1.8		0.19	U	16		0.19	U	2.4	
1,2-Dichlorobenzene	0.08	U	1.7		1.8		0.08	U	0.08	U	0.08	U	0.08	U	0.08	U	0.08	U	0.08	U	0.08	U
1,2-Dichloroethane	0.13	U	4.1		4.1		3.6		0.13	U	0.13	U	0.13	U	0.13	U	0.4	J	0.13	U	0.13	U
1,2-Dichloroethene (cis)	0.09	U	270		270		5.5		0.61	J	1.4		1.4		0.09	U	5.7		0.09	U	0.09	U
1,2-Dichloroethene (trans)	0.1	U	0.89	J	0.93	J	0.1	U	0.1	U	0.1	U	0.1	U	0.1	U	0.1	U	0.1	U	0.1	U
1,4-Dichlorobenzene	0.12	U	7.6		8.2		0.12	U	0.12	U	0.12	U	0.12	U	0.12	U	0.12	U	0.12	U	0.12	U
Acetone	1.6	UR	1.6	UR	1.6	UR	1.6	UR	1.6	UR	1.6	UR	1.6	UR	1.6	UR	1.6	UR	1.6	UR	1.6	U
Benzene	0.15	U	8.5		8.8		0.15	U	0.15	U	0.15	U	0.15	U	0.15	U	0.15	U	0.15	U	0.15	U
Chloroethane	0.46	U	0.63	J	0.62	J	0.46	U	0.46	U	0.46	U	0.46	U	0.46	U	0.46	U	0.46	U	0.46	U
Chloroform	0.16	U	0.33	J	0.33	J	0.16	U	0.16	U	0.16	U	0.16	U	0.16	U	0.16	U	0.16	U	0.16	U
M+p-xylenes	0.24	U	0.24	U	0.24	U	0.24	U	0.24	U	0.24	U	0.24	U	0.24	U	0.24	U	0.24	U	0.24	UJ
Methyl Cyclohexane	0.14	U	2.3		2		0.14	U	0.14	U	0.14	U	0.14	U	0.14	U	0.14	U	0.14	U	0.14	U
Methylene Chloride	0.78	J	1.2	B	1.1	B	0.42	U	0.42	U	0.42	U	0.42	U	0.42	U	0.42	U	0.42	U	0.42	U
Tetrachloroethene	0.12	UJ	50	J	49	J	2.5		1.7		1.2		1.1		0.12	U	1.5		0.12	U	0.12	U
Toluene	0.11	U	0.11	U	0.11	U	0.11	U	0.11	U	0.11	U	0.11	U	0.11	U	0.11	U	0.11	U	0.11	U
Trichloroethene	0.36	J	470		490		10		0.12	U	1.4		1.4		0.12	U	14		0.12	U	1	J
Xylene (Total)	0.37	U	0.37	U	0.37	U	0.37	U	0.37	U	0.37	U	0.37	U	0.37	U	0.37	U	0.37	U	0.37	U
MISCELLANEOUS																						
Chloride (mg/L)	NA		NA		NA		NA		NA		NA		NA		NA		NA		NA		NA	
Nitrate (mg/L)	NA		NA		NA		NA		NA		NA		NA		NA		NA		NA		NA	
Sulfate (mg/L)	NA		NA		NA		NA		NA		NA		NA		NA		NA		NA		NA	
Oxidation Reduction Potential (mV)	NA		NA		NA		NA		NA		NA		NA		NA		NA		NA		NA	
Total Organic Carbon (mg/L)	NA		NA		NA		NA		NA		NA		NA		NA		NA		NA		NA	
Ethane (ug/L)	NA		NA		NA		NA		NA		NA		NA		NA		NA		NA		NA	
Ethene (ug/L)	NA		NA		NA		NA		NA		NA		NA		NA		NA		NA		NA	
Methane (ug/L)	NA		NA		NA		NA		NA		NA		NA		NA		NA		NA		NA	
Dissolved Oxygen (mg/L)	3.83		0.99		NA		5.12		9.14		8.92		NA		9.35		4.11		3.32		NA	
pH	7.22		5.98		NA		4.83		4.2		4.52		NA		5.37		6.14		4.17		6.25	
Specific Conductivity (mS/cm)	0.305		0.218		NA		0.196		0.127		0.165		NA		0.126		0.16		0.112		0.367	
Turbidity (NTU)	6		0		NA		2		0		8.3		NA		0		55		5.9		30	

TABLE 3

DATA SUMMARY OF ANALYTICAL RESULTS
MONITORING WELL SAMPLES
NAS JRB WILLOW GROVE SITE 5 - FORMER FIRE TRAINING AREA

Sample ID:	05-MW05-S		05-MW06-I		05-MW06-S		05-MW07-I		05-MW07-S		05-MW08-I		05-MW08-S		05-MW08-SI		05-MW08-SI-D		05-MW09-I		05-MW09-S	
Sample Date:	08/10/05		08/12/05		08/12/05		08/09/05		08/09/05		08/18/05		08/12/05		08/12/05		08/12/05		08/17/05		08/17/05	
Dup Of:																	05-MW08-SI					
SEMIVOLATILES	ug/L		ug/L		ug/L		ug/L		ug/L		ug/L		ug/L		ug/L		ug/L		ug/L		ug/L	
1,4-Dioxane	2.1	U	2	U	2.1	U	2.1	U	2.1	U	2.1	U	2.1	U	2.1	U	2	U	2.1	U	2.1	U
VOLATILES	ug/L		ug/L		ug/L		ug/L		ug/L		ug/L		ug/L		ug/L		ug/L		ug/L		ug/L	
1,1,1-Trichloroethane	0.16	U	0.16	U	0.16	U	0.16	U	0.16	U	0.16	U	0.16	U	0.16	U	0.16	U	9.4		8.2	
1,1,2-Trichloroethane	0.11	U	0.11	U	0.11	U	0.11	U	0.11	U	0.11	U	0.11	U	0.11	U	0.11	U	0.11	U	0.11	U
1,1-Dichloroethane	0.17	U	0.17	U	0.17	U	0.17	U	0.17	U	0.17	U	0.17	U	0.17	U	0.17	U	14		21	
1,1-Dichloroethene	0.19	U	0.19	U	0.19	U	3		0.19	U	0.19	U	0.19	U	0.19	U	0.19	U	13		15	
1,2-Dichlorobenzene	0.08	U	0.08	U	0.08	U	0.08	U	0.08	U	0.08	U	0.08	U	0.08	U	0.08	U	0.08	U	0.08	U
1,2-Dichloroethane	0.13	U	0.13	U	0.13	U	0.13	U	0.13	U	0.13	U	0.13	U	0.13	U	0.13	U	0.78	J	0.4	J
1,2-Dichloroethene (cis)	0.09	U	0.09	U	0.09	U	0.09	U	0.09	U	0.09	U	0.09	U	0.09	U	0.09	U	2.3		0.8	J
1,2-Dichloroethene (trans)	0.1	U	0.1	U	0.1	U	0.1	U	0.1	U	0.1	U	0.1	U	0.1	U	0.1	U	0.1	U	0.1	U
1,4-Dichlorobenzene	0.12	U	0.12	U	0.12	U	0.12	U	0.12	U	0.12	U	0.12	U	0.12	U	0.12	U	0.12	U	0.12	U
Acetone	1.6	U	1.6	UR	1.6	UR	1.6	U	1.6	U	1.6	UR	1.6	UR	1.6	UR	1.6	UR	1.6	UR	1.6	UR
Benzene	0.15	U	0.15	U	0.15	U	0.15	U	0.15	U	0.15	U	0.15	U	0.15	U	0.15	U	0.15	U	0.83	J
Chloroethane	0.46	U	0.46	U	0.46	U	0.46	U	0.46	U	0.46	U	0.46	U	0.46	U	0.46	U	0.46	U	0.46	U
Chloroform	0.16	U	0.16	U	0.16	U	0.16	U	0.16	U	0.16	U	0.16	U	0.16	U	0.16	U	0.16	U	0.16	U
M+p-xylenes	0.24	UJ	0.24	U	0.24	U	0.24	UJ	0.24	UJ	0.24	U	0.24	U	0.24	U	0.24	U	0.24	U	0.24	U
Methyl Cyclohexane	0.14	U	0.14	U	0.14	U	0.14	U	0.14	U	0.14	U	0.14	U	0.14	U	0.14	U	0.14	U	0.14	U
Methylene Chloride	0.42	U	0.42	U	0.42	U	0.42	U	0.42	U	0.42	U	0.42	U	0.42	U	0.42	U	1		0.65	J
Tetrachloroethene	0.12	U	0.12	U	0.77	J	0.12	U	0.12	U	0.12	UJ	0.12	U	0.12	U	0.12	U	1	J	1.5	J
Toluene	0.11	U	0.11	U	0.11	U	0.11	U	0.11	U	0.11	U	0.11	U	0.11	U	0.11	U	0.11	U	0.11	U
Trichloroethene	0.12	U	0.12	U	0.12	U	1.6	J	0.12	U	0.12	U	0.12	U	0.12	U	0.12	U	7.3		6.2	
Xylene (Total)	0.37	U	0.37	U	0.37	U	0.37	U	0.37	U	0.37	U	0.37	U	0.37	U	0.37	U	0.37	U	0.37	U
MISCELLANEOUS																						
Chloride (mg/L)	NA		NA		NA		NA		NA		NA		NA		NA		NA		NA		NA	
Nitrate (mg/L)	NA		NA		NA		NA		NA		NA		NA		NA		NA		NA		NA	
Sulfate (mg/L)	NA		NA		NA		NA		NA		NA		NA		NA		NA		NA		NA	
Oxidation Reduction Potential (mV)	NA		NA		NA		NA		NA		NA		NA		NA		NA		NA		NA	
Total Organic Carbon (mg/L)	NA		NA		NA		NA		NA		NA		NA		NA		NA		NA		NA	
Ethane (ug/L)	NA		NA		NA		NA		NA		NA		NA		NA		NA		NA		NA	
Ethene (ug/L)	NA		NA		NA		NA		NA		NA		NA		NA		NA		NA		NA	
Methane (ug/L)	NA		NA		NA		NA		NA		NA		NA		NA		NA		NA		NA	
Dissolved Oxygen (mg/L)	NA		5.2		2.54		2.87		NA		3.82		4.48		0.98		NA		1.73		5.73	
pH	4.67		6.32		5.32		6.77		4.48		7.07		5.67		6.16		NA		6.63		4.19	
Specific Conductivity (mS/cm)	0.124		0.352		0.141		0.316		0.284		0.267		0.24		0.278		NA		0.317		0.161	
Turbidity (NTU)	8.7		4.2		10		6.3		0		6		6.2		18		NA		0		5.4	

TABLE 3

DATA SUMMARY OF ANALYTICAL RESULTS
MONITORING WELL SAMPLES
NAS JRB WILLOW GROVE SITE 5 - FORMER FIRE TRAINING AREA

Sample ID:	05-MW09-SI		05-MW10-I		05-MW10-S		05-MW10-SI		05-MW11-D		05-MW11-I		05-MW11-S		05-MW12-I		05-MW12S		05-MW13I		05-MW14I	
Sample Date:	08/17/05		08/09/05		08/09/05		08/09/05		08/11/05		08/11/05		08/11/05		08/17/05		08/25/05		08/24/05		08/25/05	
Dup Of:																						
SEMIVOLATILES	ug/L		ug/L		ug/L		ug/L		ug/L		ug/L		ug/L		ug/L		ug/L		ug/L		ug/L	
1,4-Dioxane	2.1	U	2	U	2.1	U	2.1	U	2	U	2	U	2.1	U	2.1	U	2	U	2.1	U	2.1	U
VOLATILES	ug/L		ug/L		ug/L		ug/L		ug/L		ug/L		ug/L		ug/L		ug/L		ug/L		ug/L	
1,1,1-Trichloroethane	16		2.7		22		73		0.16	U	0.16	U	0.16	U	0.16	U	2.3	J	28		20	
1,1,2-Trichloroethane	0.64	J	0.11	U	0.11	U	2.6		0.11	U	0.11	U	0.11	U	0.11	U	0.8	J	0.11	U	0.11	U
1,1-Dichloroethane	19		0.17	U	11	J	51		0.17	U	0.17	U	0.17	U	0.79	J	27		29		13	
1,1-Dichloroethene	25		4.6		17		79		0.19	U	0.19	U	0.19	U	0.19	U	3	J	29		24	
1,2-Dichlorobenzene	0.08	U	0.08	U	0.08	U	0.08	U	0.08	U	0.08	U	0.08	U	0.08	U	0.08	UJ	0.08	U	0.08	U
1,2-Dichloroethane	0.89	J	0.13	U	0.13	U	0.13	U	0.13	U	0.13	U	0.13	U	0.13	U	0.13	UJ	0.13	U	0.13	U
1,2-Dichloroethene (cis)	1.9		0.51	J	1.3		14		0.09	U	0.09	U	0.09	U	0.6	J	7.2	J	4.8		2	
1,2-Dichloroethene (trans)	0.1	U	0.1	U	0.1	U	0.1	U	0.1	U	0.1	U	0.1	U	0.1	U	0.1	UJ	0.1	U	0.1	U
1,4-Dichlorobenzene	0.12	U	0.12	U	0.12	U	0.12	U	0.12	U	0.12	U	0.12	U	0.12	U	0.12	UJ	0.12	U	0.12	U
Acetone	1.6	UR	1.6	U	1.6	U	1.6	U	1.6	UR	1.6	UR	1.6	UR	1.6	UR	1.6	UJ	1.6	UR	1.6	U
Benzene	0.39	J	0.15	U	0.15	U	1.1		0.15	U	0.15	U	0.15	U	0.15	U	0.15	UJ	0.15	U	0.15	U
Chloroethane	0.46	U	0.46	U	0.46	U	0.46	U	0.46	U	0.46	U	0.46	U	0.46	U	0.46	UJ	0.46	U	0.46	U
Chloroform	0.16	U	0.16	U	0.16	U	0.16	U	0.16	U	0.16	U	0.16	U	0.16	U	0.16	UJ	0.16	U	0.16	U
M+p-xylenes	0.24	U	0.24	UJ	0.24	UJ	0.24	UJ	0.24	U	0.24	U	0.24	U	0.24	U	0.61	J	0.24	U	0.24	U
Methyl Cyclohexane	0.14	U	0.14	U	0.14	U	0.14	U	0.14	U	0.14	U	0.14	U	0.14	U	0.14	UJ	0.14	U	0.14	U
Methylene Chloride	1		0.42	U	0.42	U	0.42	U	0.42	U	0.42	U	0.42	U	0.42	U	0.42	UJ	0.42	U	0.42	UJ
Tetrachloroethene	1.5	J	0.12	U	1.5		4		0.12	U	0.12	U	0.12	U	1.1		1.2	J	1		0.12	U
Toluene	0.11	U	0.11	U	0.11	U	0.11	U	0.11	U	0.11	U	0.11	U	0.11	U	0.65	J	0.11	U	0.11	U
Trichloroethene	13		2.3	J	6.2	J	52		0.12	U	0.12	U	0.12	U	0.12	U	3.7	J	13		7.9	
Xylene (Total)	0.37	U	0.37	U	0.37	U	0.37	U	0.37	U	0.37	U	0.37	U	0.37	U	0.61	J	0.37	U	0.37	U
MISCELLANEOUS																						
Chloride (mg/L)	NA		NA		NA		NA		NA		NA		NA		NA		3.52		2.88	L	3.72	
Nitrate (mg/L)	NA		NA		NA		NA		NA		NA		NA		NA		0.613		0.621		0.481	
Sulfate (mg/L)	NA		NA		NA		NA		NA		NA		NA		NA		29		29		28	
Oxidation Reduction Potential (mV)	NA		NA		NA		NA		NA		NA		NA		NA		390		390		400	
Total Organic Carbon (mg/L)	NA		NA		NA		NA		NA		NA		NA		NA		0.4	U	0.4	U	0.419	
Ethane (ug/L)	NA		NA		NA		NA		NA		NA		NA		NA		5	U	5	U	5	U
Ethene (ug/L)	NA		NA		NA		NA		NA		NA		NA		NA		5	U	5	U	5	U
Methane (ug/L)	NA		NA		NA		NA		NA		NA		NA		NA		5	U	5	U	5	U
Dissolved Oxygen (mg/L)	5.42		3.09		NA		NA		NA		NA		NA		3.3		3.19		1.53		1.16	
pH	4.7		7.21		4.3		5.12		5.85		4.68		4.69		5.5		5.66		6.97		6.84	
Specific Conductivity (mS/cm)	0.265		0.322		0.221		0.37		0.343		1.84		0.182		0.146		0.168		0.385		0.346	
Turbidity (NTU)	3.9		3.2		10		9.4		1.9		0		0		110		19		19		9.7	

TABLE 3

DATA SUMMARY OF ANALYTICAL RESULTS
MONITORING WELL SAMPLES
NAS JRB WILLOW GROVE SITE 5 - FORMER FIRE TRAINING AREA

Sample ID:	05-MW14S		05-MW15I		05-MW15S		05MW14I-D		03-MW08-D		03-MW08-S
Sample Date:	08/24/05		08/24/05		08/24/05		08/25/05		01/30/06		01/30/06
Dup Of:							05MW14I				
SEMIVOLATILES	ug/L		ug/L		ug/L		ug/L		ug/L		ug/L
1,4-Dioxane	2	U	2	U	2	U	2	U	NA		NA
VOLATILES	ug/L		ug/L		ug/L		ug/L				
1,1,1-Trichloroethane	0.16	UJ	2.4		0.16	U	20		3		ND
1,1,2-Trichloroethane	0.11	UJ	0.11	U	0.11	U	0.11	U	NA		NA
1,1-Dichloroethane	0.17	UJ	1.4		0.17	U	14		5.9		ND
1,1-Dichloroethene	0.19	UJ	1.8		0.19	U	23		2.5		ND
1,2-Dichlorobenzene	0.08	UJ	0.08	U	0.08	U	0.08	U	NA		NA
1,2-Dichloroethane	0.13	UJ	0.13	U	0.13	U	0.13	U	NA		NA
1,2-Dichloroethene (cis)	0.09	UJ	0.09	U	0.09	U	2		0.9	J	ND
1,2-Dichloroethene (trans)	0.1	UJ	0.1	U	0.1	U	0.1	U	NA		NA
1,4-Dichlorobenzene	0.12	UJ	0.12	U	0.12	U	0.12	U	NA		NA
Acetone	3.3	J	1.6	UR	1.6	UR	1.6	U	ND		ND
Benzene	0.15	UJ	0.15	U	0.15	U	0.15	U	NA		NA
Chloroethane	0.46	UJ	0.46	U	0.46	U	0.46	U	NA		NA
Chloroform	0.16	UJ	0.16	U	0.16	U	0.16	U	ND		ND
M+p-xylenes	0.24	UJ	0.24	U	0.24	U	0.24	U	NA		NA
Methyl Cyclohexane	0.14	UJ	0.14	U	0.14	U	0.14	U	NA		NA
Methylene Chloride	0.42	UJ	0.42	U	0.42	U	0.42	UJ	ND		ND
Tetrachloroethene	0.12	UJ	0.12	U	0.12	U	0.12	U	0.78	J	ND
Toluene	0.11	UJ	0.11	U	0.11	U	0.11	U	0.19	J	ND
Trichloroethene	0.12	UJ	1		0.12	U	7.5		1.5		ND
Xylene (Total)	0.37	UJ	0.37	U	0.37	U	0.37	U	NA		NA
MISCELLANEOUS											
Chloride (mg/L)	2.97	L	13	L	2.64	L	NA		NA		NA
Nitrate (mg/L)	0.783		0.791		0.678		NA		NA		NA
Sulfate (mg/L)	43		38		36		NA		NA		NA
Oxidation Reduction Potential (mV)	400		400		410		NA		NA		NA
Total Organic Carbon (mg/L)	0.4	U	0.621		0.4	U	NA		NA		NA
Ethane (ug/L)	5	U	5	U	5	U	NA		NA		NA
Ethene (ug/L)	5	U	5	U	5	U	NA		NA		NA
Methane (ug/L)	5	U	5	U	5	U	NA		NA		NA
Dissolved Oxygen (mg/L)	1.02		2.76		4.56		NA		NA		NA
pH	6.82		6.02		6.25		NA		NA		NA
Specific Conductivity (mS/cm)	0.413		0.343		0.247		NA		NA		NA
Turbidity (NTU)	550		3.6		14		NA		NA		NA

TABLE 4

DATA SUMMARY OF ANALYTICAL RESULTS
COMPLETE DATA SET OF NATURAL ATTENUATION PARAMETERS - 2000 AND 2005
NAS JRB WILLOW GROVE SITE 5 - FIRE TRAINING AREA

		BACKGROUND																											
Sample ID:		05MW02S		05MW01S		05MW01SI		05MW01I		05MW03S		05MW03I		05MW04S		05MW04I		05MW05S		05MW05I		05MW06S		05MW06I		05MW07S	
Sample Date:		09/18/00		09/25/00		09/25/00		09/25/00		09/18/00		09/18/00		09/21/00		09/21/00		09/12/00		09/21/00		09/13/00		09/13/00		09/14/00	
MISCELLANEOUS PARAMETERS	Preliminary Screening Parameters	mg/L		mg/L		mg/L		mg/L		mg/L		mg/L		mg/L		mg/L		mg/L		mg/L		mg/L		mg/L		mg/L	
Chloride	>2X Background	1.3		14.4		4.5		2.5		1.2		1.8		1.7		2.6		2.9		9.3		2.3		2.9		NA	
Ferrous Iron	>1mg/L	0.088		0.0045	B	0.05	U	0.0045	B	0.0045	B	0.0045	B	0.0045	B	0.33		0.078		0.63		0.05	U	0.05	U	NA	
Nitrate	<1mg/L	0.74		0.5	U	0.78		1.1		0.94		0.83		0.79		0.75		0.53		0.16	B	1.3		1.1		NA	
Sulfate	<20mg/L	29.7		15		19		17.2		27.7		27.4		31.8		23		16.9		27.3		32		10.5		NA	
Sulfide	>1mg/L	1	U	1	U	3.8		1	U	1	U	1	U	1	U	1	U	1	U	2.4		1	U	1	U	1	U
Total Alkalinity	>2X Background	10		73.6		103		125		6.4		51.2		7.8		41.6		58.4		163		18.2		189		NA	
Total Organic Carbon	>20mg/L	0.48	B	2.6		0.79	B	1	U	0.18	B	0.31	B	1	U	0.32	B	0.38	B	0.8	B	0.55	B	0.4	B	NA	
Oxidation Reduction Potential	<50 mV or <-100mV	NS		NS		NS		NS		NS		NS		NS		NS		NS		NS		NS		NS		NS	
Carbon Dioxide	>2X Background	37.1		128.4		71.9		6.3		23.2		45.6		38.2		55.1		76.2		0.4	U	95.6		8.8		119.1	
Oxygen	<0.5 mg/L	4.62		1.09		0.75		3.05		5.3		2.92		5.07		4		2.31		1.06		2.46		2.12		0.64	
		nm/L		nm/L		nm/L		nm/L		nm/L		nm/L		nm/L		nm/L		nm/L		nm/L		nm/L		nm/L		nm/L	
Hydrogen	>1 nM	3.6		6.4		8.8		8		4.1		3.4		7.1		7		>50		18.2		>50		>50		>50	
		ug/L		ug/L		ug/L		ug/L		ug/L		ug/L		ug/L		ug/L		ug/L		ug/L		ug/L		ug/L		ug/L	
Ethane	>100 ug/L	0.01		0.03		0.01	U	0.01	U	0.01	U	0.01		0.01	U	0.01	U	0.01	U	0.01		0.01	U	0.01	U	0.01	U
Ethene	>10 ug/L	0.01		0.05		0.02		0.01	U	0.01	U	0.01		0.01	U	0.01	U	0.01	U	0.01		0.01		0.01	U	0.01	
Methane	>500 ug/L	0.02	U	15.8		0.3		0.02	U	0.02	U	0.02	U	0.02	U	0.02	U	0.02	U	0.02	U	0.02	U	161.9		0.02	U

Notes:
- Bolded means concentration meets the preliminary screening parameters.
- NA means not applicable.
- NS means not sampled for this analyte.

TABLE 4

DATA SUMMARY OF ANALYTICAL RESULTS
COMPLETE DATA SET OF NATURAL ATTENUATION PARAMETERS - 2000 AND 2005
NAS JRB WILLOW GROVE SITE 5 - FIRE TRAINING AREA

Sample ID:		05MW07I	05MW08S	05MW08SI	05MW08I	05MW09S	05MW09SI	05MW09I	05MW10S	05MW10SI	05MW10I	05MW11S	05MW11SI	05MW11I
Sample Date:		09/14/00	09/15/00	09/15/00	09/15/00	09/26/00	09/22/00	09/22/00	09/15/00	09/18/00	09/18/00	09/12/00	09/12/00	09/13/00
MISCELLANEOUS PARAMETERS	Preliminary Screening Parameters	mg/L	mg/L	mg/L	mg/L	mg/L	mg/L	mg/L	mg/L	mg/L	mg/L	mg/L	mg/L	mg/L
Chloride	>2X Background	NA	**4.9**	**4.5**	**2.8**	**4.5**	**5.1**	**3.3**	**3.8**	**5**	**2.7**	**6.8**	**6.7**	**9.9**
Ferrous Iron	>1mg/L	NA	0.057	0.0045 B	0.0045 B	0.0045 B	0.0045 B	0.0045 B	0.067	0.015 B	0.026 B	0.067	0.046 B	0.05 U
Nitrate	<1mg/L	NA	1.9	1.5	1.1	**0.32** B	**0.93**	1.1	**0.39** B	**0.8**	1	2.1	2	**0.4** B
Sulfate	<20mg/L	NA	36.9	**19.2**	**16.4**	31.9	**14.3**	**15.6**	33.8	**14.9**	**15.8**	47.8	44.1	**15.2**
Sulfide	>1mg/L	1 U	1 U	1 U	1 U	1 U	1 U	1 U	1 U	**1.8**	1 U	1 U	1 U	1 U
Total Alkalinity	>2X Background	NA	**59**	**139**	**129**	**42**	**131**	**142**	**45.5**	**155**	**138**	**69.1**	**33.6**	**170**
Total Organic Carbon	>20mg/L	NA	1.5	0.93 B	0.35 B	1.1	0.92 B	0.33 B	1.1	1.6	0.51 B	12.5	0.33 B	0.23 B
Oxidation Reduction Potential	<50 mV or <-100mV	NS	NS	NS	NS	NS	NS	NS	NS	NS	NS	NS	NS	NS
Carbon Dioxide	>2X Background	21.8	**122**	67.2	16.1	**174.9**	**90.5**	21.8	**192.9**	58.2	6.5	**100.4**	**83.5**	1.7
Oxygen	<0.5 mg/L	1.95	0.86	0.82	2.33	**0.36**	0.73	1.92	0.52	1.06	3.89	**0.21**	3.05	1.09
		nm/L	nm/L	nm/L	nm/L		nm/L	nm/L	nm/L	nm/L	nm/L	nm/L	nm/L	nm/L
Hydrogen	>1 nM	**>50**	**>50**	**>50**	**>50**	**11.1**	**6.6**	**7**	**>50**	**>50**	**>50**	**1.8**	**2.5**	**>50**
		ug/L	ug/L	ug/L	ug/L	ug/L	ug/L	ug/L	ug/L	ug/L	ug/L	ug/L	ug/L	ug/L
Ethane	>100 ug/L	0.01 U	0.01 U	0.01 U	0.01 U	0.01	0.01 U	0.01	0.01 U	0.01	0.01	0.01 U	0.01 U	0.01 U
Ethene	>10 ug/L	0.01 U	0.01 U	0.01 U	0.01 U	0.05	0.02	0.01	0.01	0.01	0.02	0.01	0.01 U	0.01 U
Methane	>500 ug/L	1.5	0.02 U	0.02 U	0.02 U	0.8	0.02 U	0.02 U	2.8	0.02 U	0.02 U	0.02 U	0.02 U	1.3

Notes:
- Bolded means concentration meets the preliminary screening parameters.
- NA means not applicable.
- NS means not sampled for this analyte.

TABLE 4

DATA SUMMARY OF ANALYTICAL RESULTS
COMPLETE DATA SET OF NATURAL ATTENUATION PARAMETERS - 2000 AND 2005
NAS JRB WILLOW GROVE SITE 5 - FIRE TRAINING AREA

Sample ID:		**05MW12S**		**05MW12I**		**05MW13I**		**05MW14S**		**05MW14I**		**05MW15S**		**05MW15I**		
Sample Date:		**8/25/2005**		**09/21/00**		**8/24/2005**		**8/24/2005**		**8/25/2005**		**8/24/2005**		**8/24/2005**		
MISCELLANEOUS	**Preliminary Screening**															**POINTS FROM PRELIMINARY**
PARAMETERS	**Parameters**	**mg/L**		**mg/L**		**mg/L**		**mg/L**		**mg/L**		**mg/L**		**mg/L**		**SCREENING**
Chloride	>2X Background	**3.52**		2.4		**2.88**	L	**2.97**	L	**3.72**		**2.64**	L	**13**	L	2 points
Ferrous Iron	>1mg/L	NS		0.5		NS		NS		NS		NS		NS		0 points
Nitrate	<1mg/L	**0.613**		**0.88**		**0.621**		**0.783**		**0.481**		**0.678**		**0.791**		2 points
Sulfate	<20mg/L	29		27.8		29		43		28		36		38		0 points
Sulfide	>1mg/L	NS		1	U	NS		NS		NS		NS		NS		0 points
Total Alkalinity	>2X Background	NS		**38.6**		NS		NS		NS		NS		NS		1 point
Total Organic Carbon	>20mg/L	0.4	U	0.35	B	0.4	U	0.4	U	0.419		0.4	U	0.621		0 points
Oxidation Reduction Potential	<50 mV or <-100mV	390		NS		390		400		400		410		400		0 points
Carbon Dioxide	>2X Background	NS		55		NS		NS		NS		NS		NS		1 point
Oxygen	<0.5 mg/L	3.19		3.3		1.53		1.02		1.16		4.56		2.76		0 points
		nm/L		**nm/L**		**nm/L**		**nm/L**		**nm/L**		**nm/L**		**nm/L**		
Hydrogen	>1 nM	NS		**9.9**		NS		NS		NS		NS		NS		3 points
		ug/L		**ug/L**		**ug/L**		**ug/L**		**ug/L**		**ug/L**		**ug/L**		
Ethane	>100 ug/L	5	U	0.01	U	5	U	5	U	5	U	5	U	5	U	0 points
Ethene	>10 ug/L	5	U	0.01		5	U	5	U	5	U	5	U	5	U	0 points
Methane	>500 ug/L	5	U	0.02	U	5	U	5	U	5	U	5	U	5	U	0 points
																TOTAL 9 POINTS

Notes:
- Bolded means concentration meets the preliminary screening parameters.
- NA means not applicable.
- NS means not sampled for this analyte.

FIGURES

2192 WillowGrove\1401\2192CM02.DWG 05/05/05 MKB

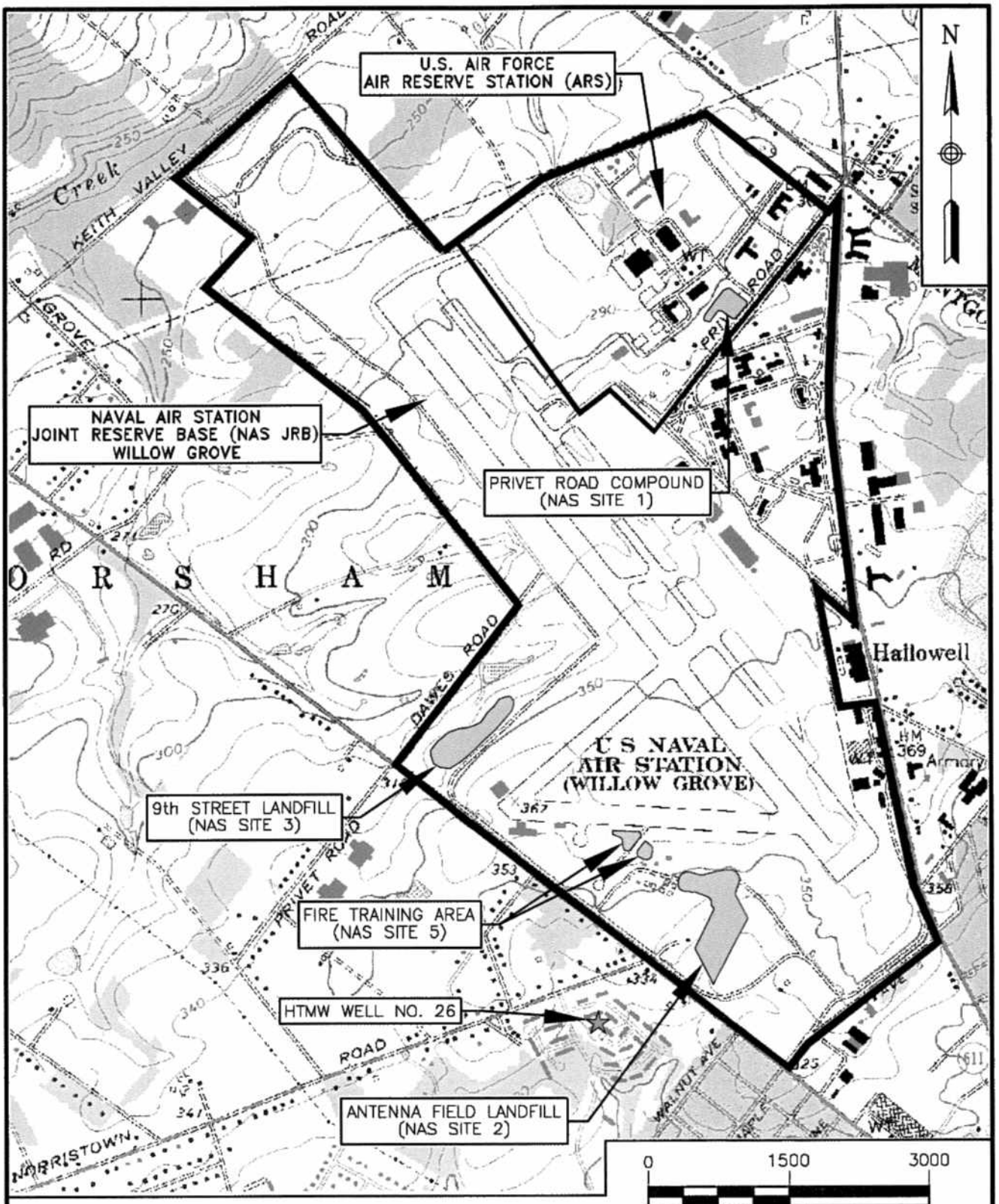

BASE MAP IS A PORTION OF THE AMBLER, PA U.S.G.S. 7.5 MINUTE QUADRANGLE MAP, DATED 1963, PHOTOREVISED IN 1983.

DRAWN BY MKB DATE 05/05/05	Tetra Tech NUS, Inc.	CONTRACT NO.: 2192	OWNER NO.: CTO 003
CHECKED BY DATE	LOCATION OF RI SITES SITE 5 – FIRE TRAINING AREA NAS JRB WILLOW GROVE WILLOW GROVE, PENNSYLVANIA	DRAWING INFORMATION:	
REVISED BY DATE		APPROVED BY: DATE	
SCALE AS NOTED		DRAWING NO.: FIGURE 1	REV.

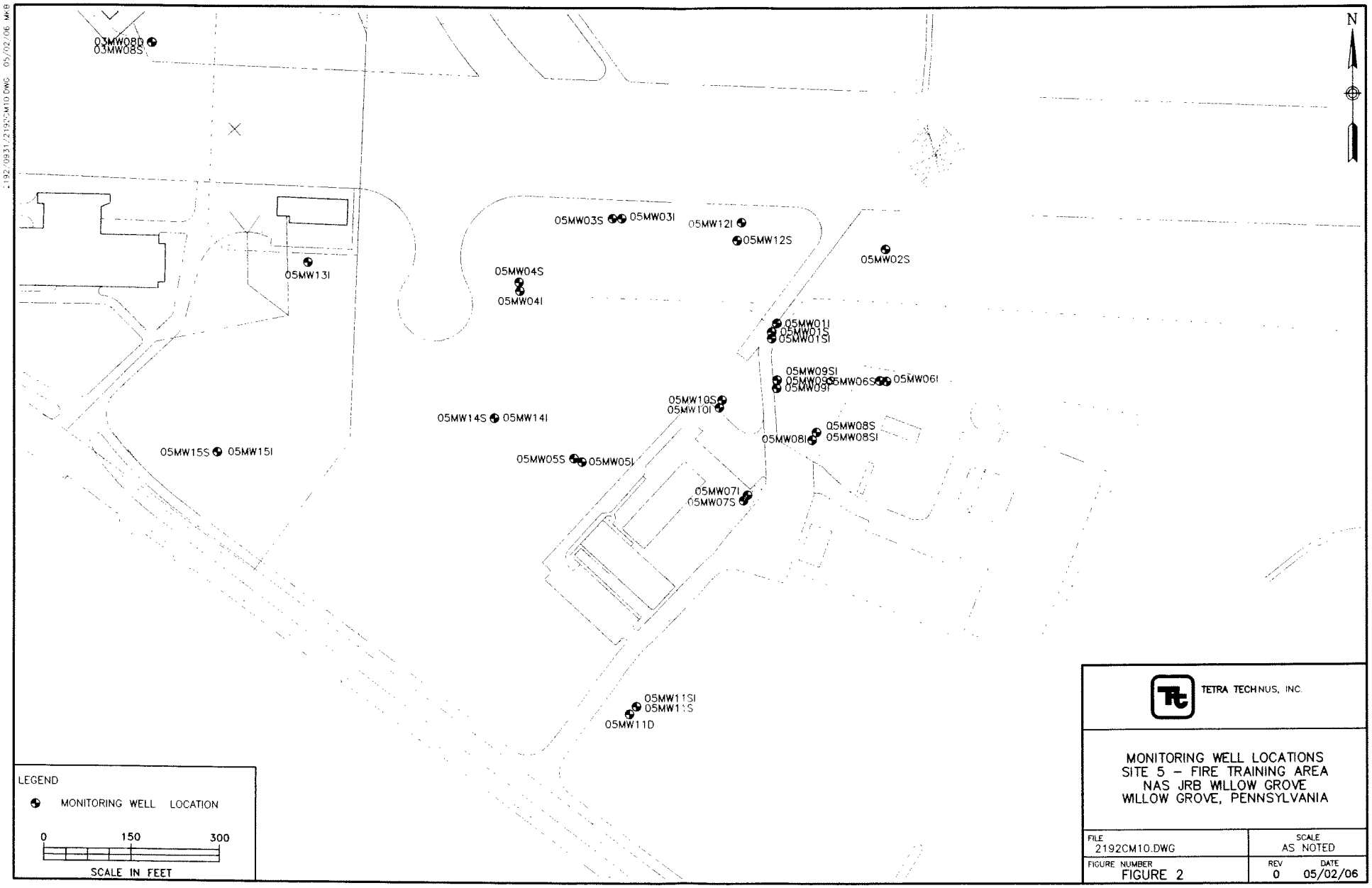

TETRA TECH NUS, INC.

MONITORING WELL LOCATIONS
SITE 5 – FIRE TRAINING AREA
NAS JRB WILLOW GROVE
WILLOW GROVE, PENNSYLVANIA

FILE	SCALE
2192CM10.DWG	AS NOTED
FIGURE NUMBER	REV / DATE
FIGURE 2	0 / 05/02/06

2192/0931/2192CM10.DWG 05/02/06 MPB

2192/0931/2192CM11-1.DWG 05/11/06 MKB

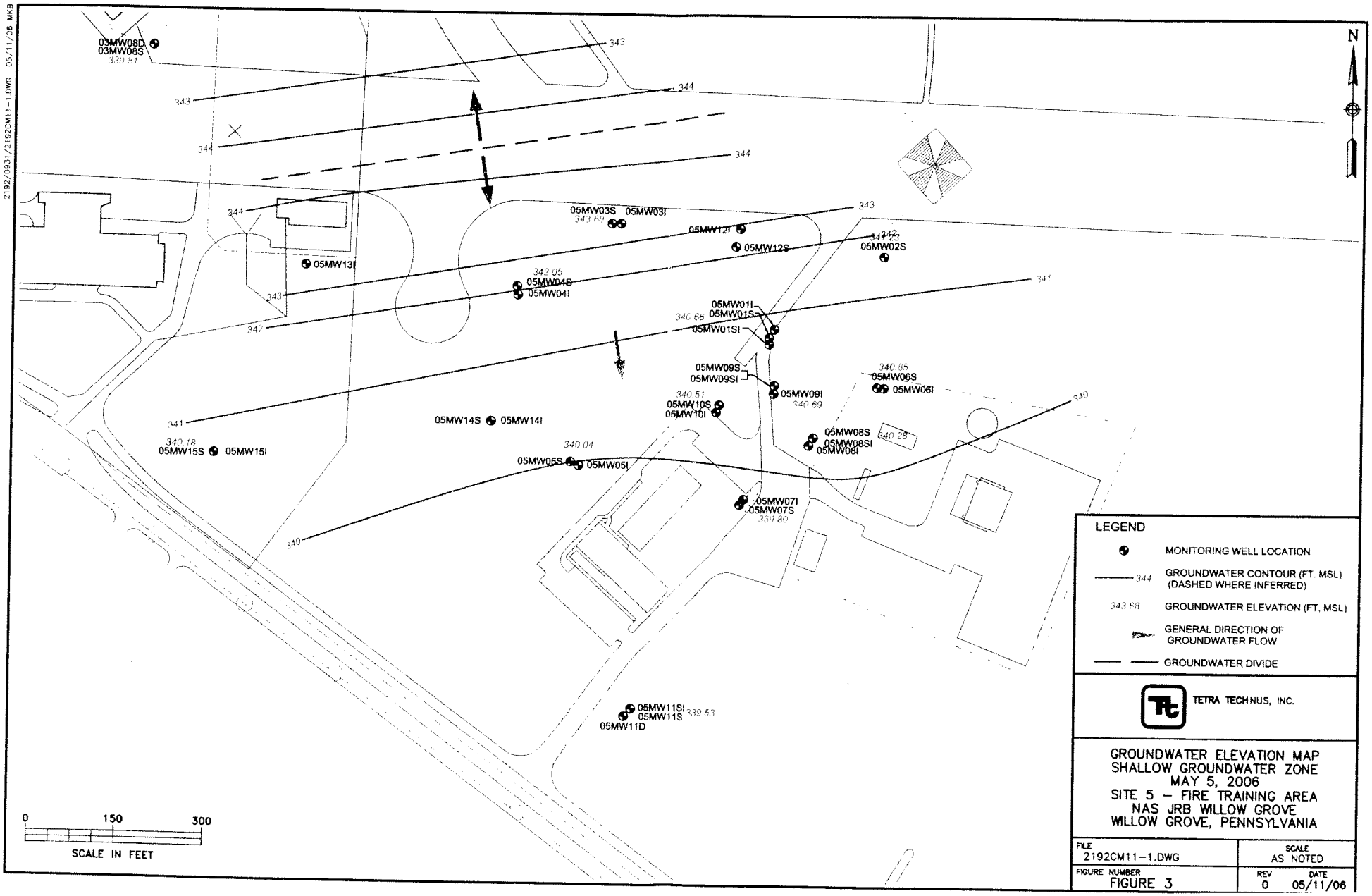

LEGEND

- MONITORING WELL LOCATION
- 344 GROUNDWATER CONTOUR (FT. MSL) (DASHED WHERE INFERRED)
- 343.68 GROUNDWATER ELEVATION (FT. MSL)
- GENERAL DIRECTION OF GROUNDWATER FLOW
- GROUNDWATER DIVIDE

TETRA TECH NUS, INC.

GROUNDWATER ELEVATION MAP
SHALLOW GROUNDWATER ZONE
MAY 5, 2006
SITE 5 – FIRE TRAINING AREA
NAS JRB WILLOW GROVE
WILLOW GROVE, PENNSYLVANIA

FILE	SCALE
2192CM11-1.DWG	AS NOTED
FIGURE NUMBER	REV / DATE
FIGURE 3	0 / 05/11/06

2192/0931/2192CM11-2.DWG 05/11/06 MKB

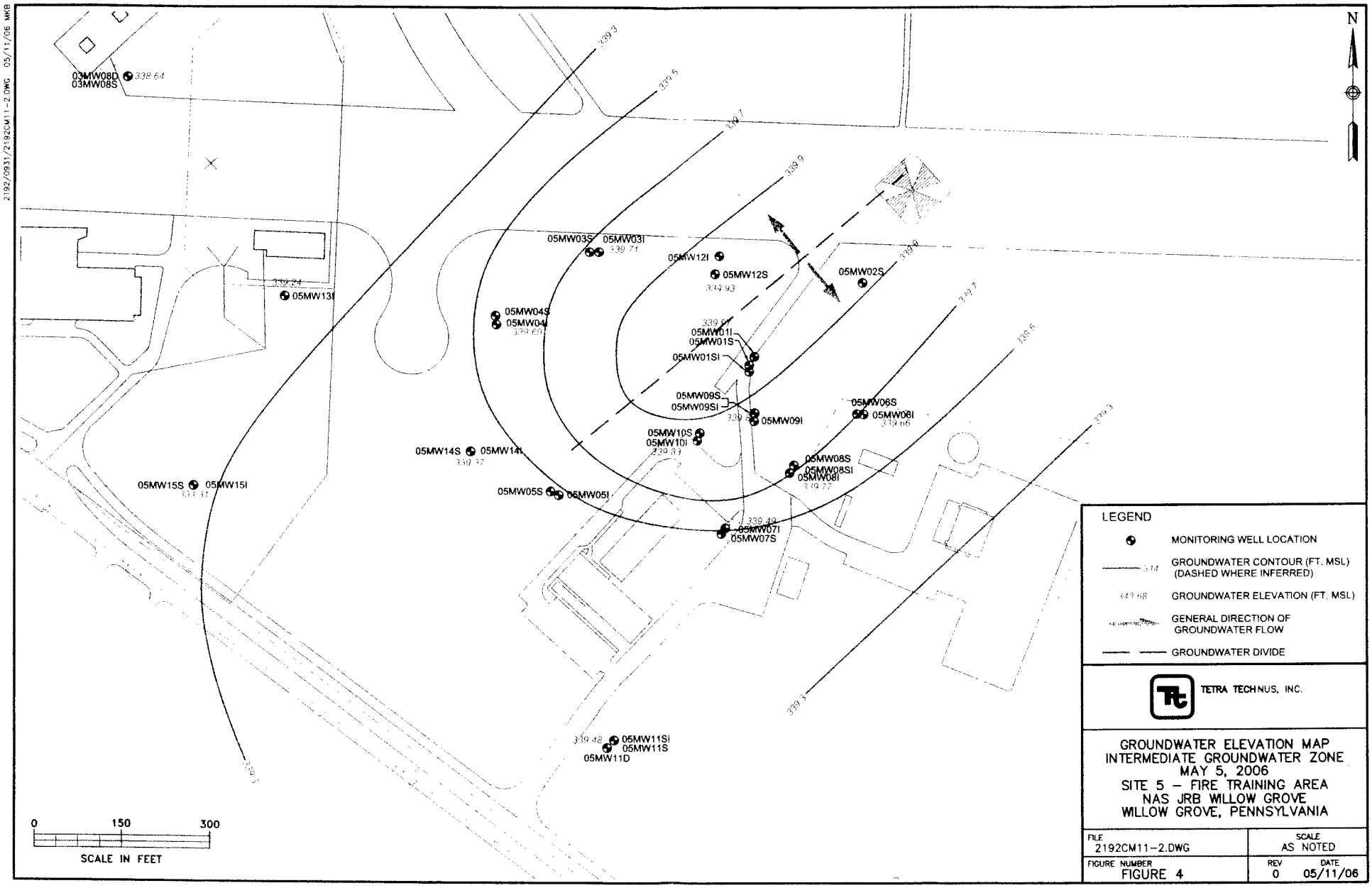

LEGEND

- MONITORING WELL LOCATION
- GROUNDWATER CONTOUR (FT. MSL) (DASHED WHERE INFERRED)
- GROUNDWATER ELEVATION (FT. MSL)
- GENERAL DIRECTION OF GROUNDWATER FLOW
- GROUNDWATER DIVIDE

TETRA TECH NUS, INC.

GROUNDWATER ELEVATION MAP
INTERMEDIATE GROUNDWATER ZONE
MAY 5, 2006
SITE 5 – FIRE TRAINING AREA
NAS JRB WILLOW GROVE
WILLOW GROVE, PENNSYLVANIA

FILE	SCALE
2192CM11-2.DWG	AS NOTED
FIGURE NUMBER	REV / DATE
FIGURE 4	0 / 05/11/06

2192/0931/2192CM09-2.DWG 11/01/05 MKB

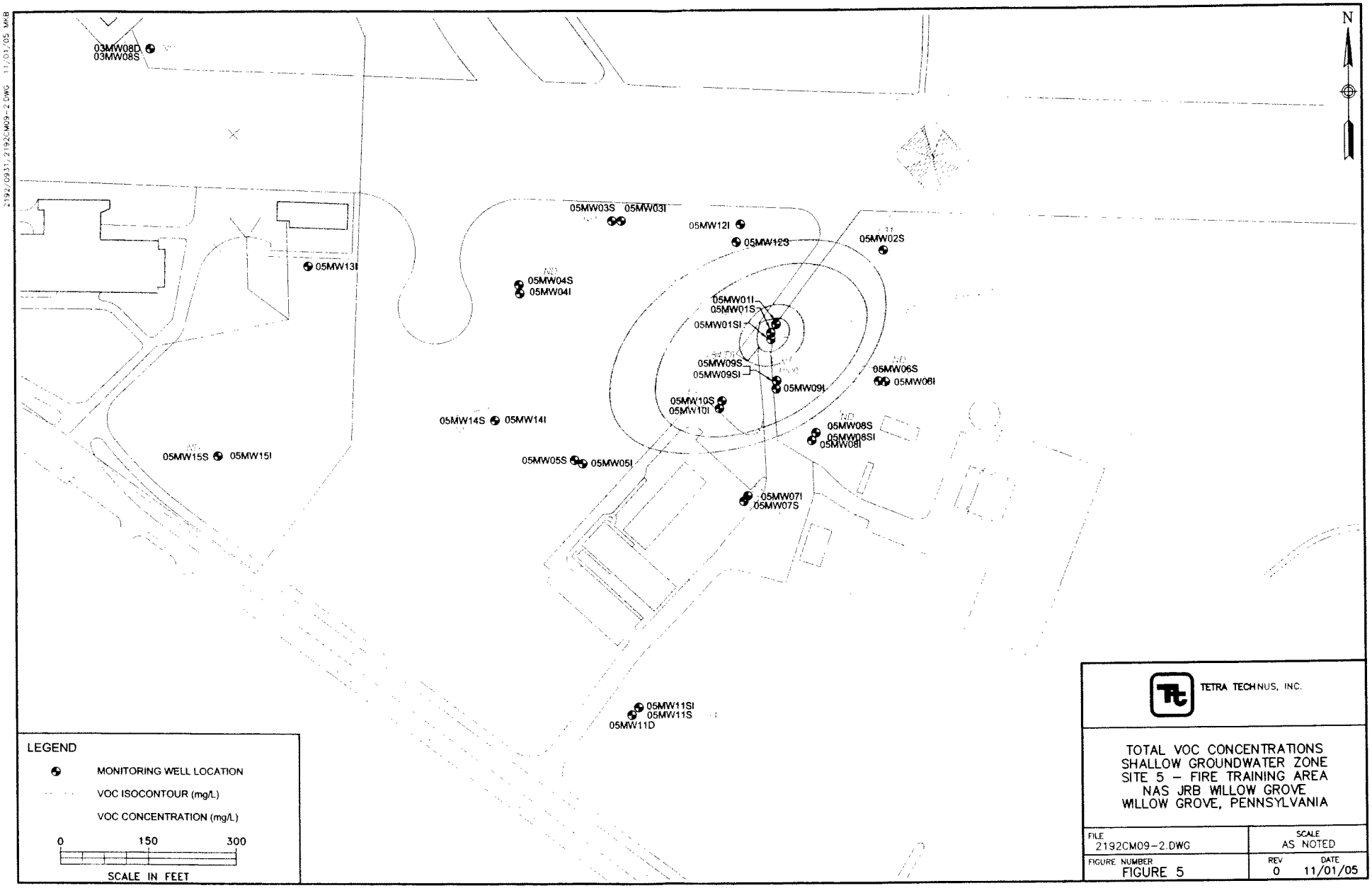

LEGEND

- MONITORING WELL LOCATION
- VOC ISOCONTOUR (mg/L)
- VOC CONCENTRATION (mg/L)

0 150 300

SCALE IN FEET

TETRA TECH NUS, INC.

TOTAL VOC CONCENTRATIONS
SHALLOW GROUNDWATER ZONE
SITE 5 – FIRE TRAINING AREA
NAS JRB WILLOW GROVE
WILLOW GROVE, PENNSYLVANIA

FILE	SCALE
2192CM09-2.DWG	AS NOTED
FIGURE NUMBER	REV / DATE
FIGURE 5	0 / 11/01/05

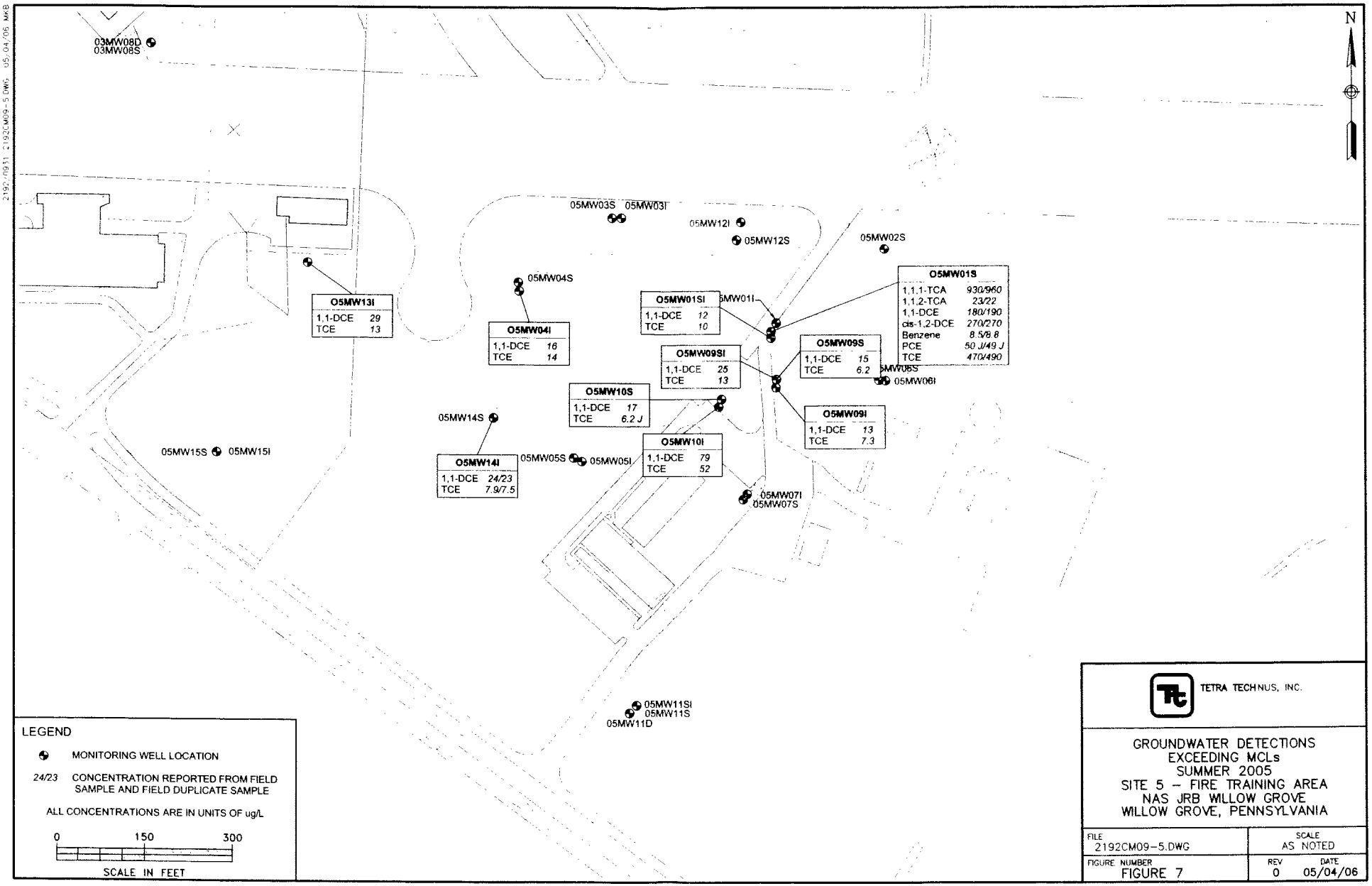

TETRA TECH NUS, INC.

GROUNDWATER DETECTIONS
EXCEEDING MCLs
SUMMER 2005
SITE 5 – FIRE TRAINING AREA
NAS JRB WILLOW GROVE
WILLOW GROVE, PENNSYLVANIA

FILE	SCALE
2192CM09-5.DWG	AS NOTED
FIGURE NUMBER	REV / DATE
FIGURE 7	0 / 05/04/06

2192/0911 2192CM09-5.DWG 05/04/06 MKB

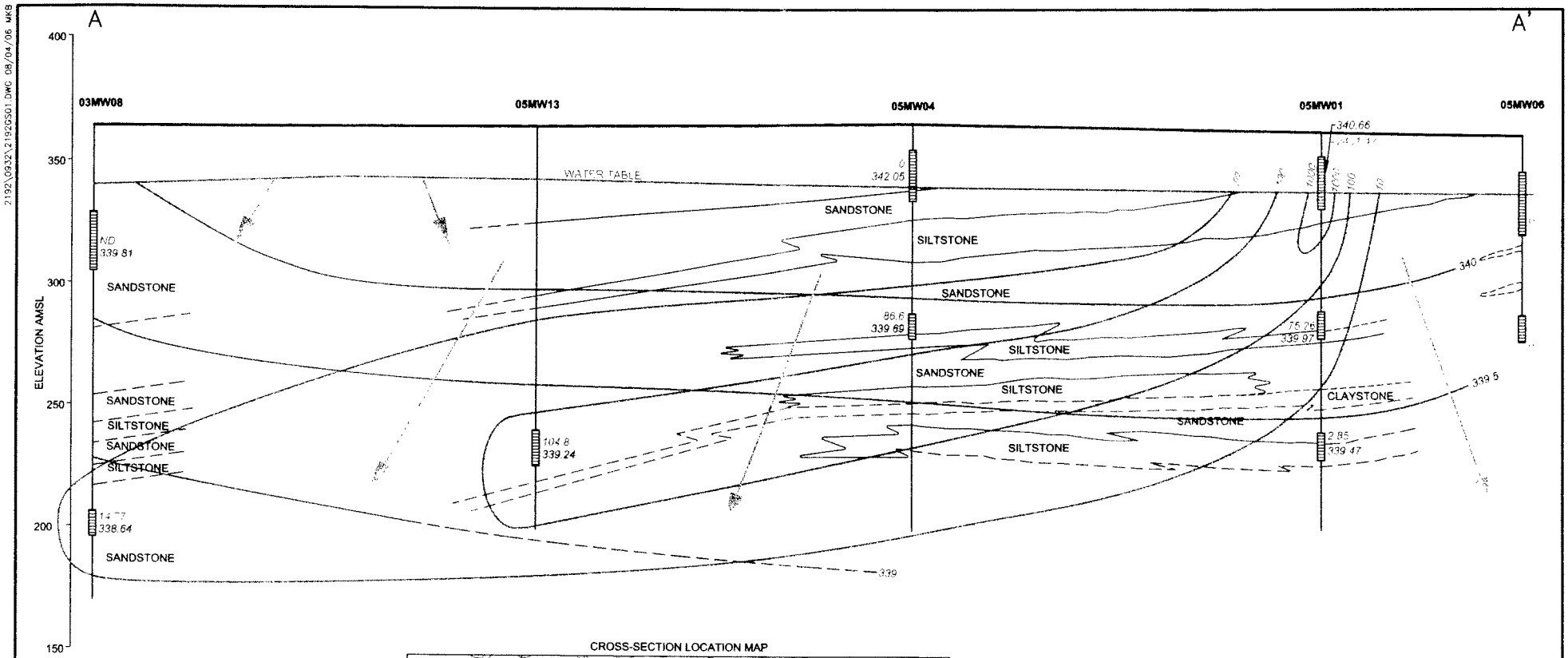

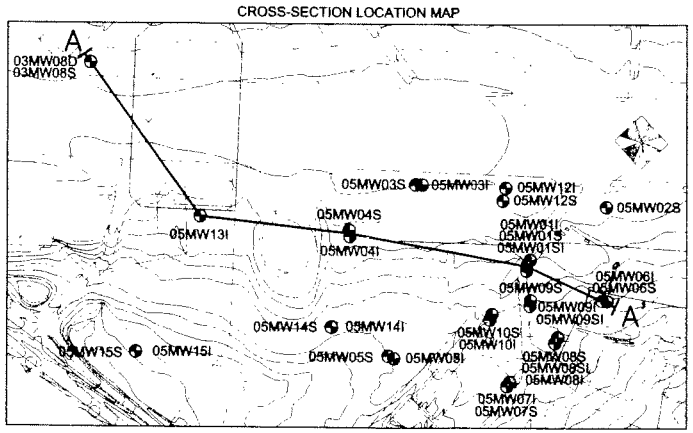

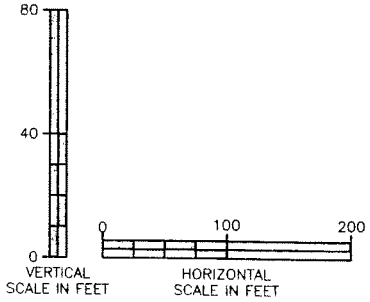

LEGEND

340 HYDRAULIC HEAD

TOTAL VOCs

GENERAL DIRECTION OF GROUNDWATER FLOW

TETRA TECH NUS, INC.

HYDROGEOLOGIC CROSS-SECTION A-A'
SITE 5
FIRE TRAINING AREA
NAS JRB WILLOW GROVE
WILLOW GROVE, PENNSYLVANIA

FILE	SCALE
2192GS01.DWG	AS NOTED
FIGURE NUMBER	REV / DATE
FIGURE 8	0 / 08/04/06

2192\0932\2192GS01.DWG 08/04/06 MKB

APPENDICES

APPENDIX A

Tetra Tech NUS, Inc.

BORING LOG

PROJECT NAME: NASJRB Willow Grove
PROJECT NUMBER: N2192/CTO-003
DRILLING COMPANY: Talon Drilling Co.
DRILLING RIG: REICH T-650-WII

BORING No.: OSMW12S
DATE: 6-20-08
GEOLOGIST: Neb Dedic
DRILLER: Joe Diethorn

Sample No. and Type or RQD	Depth (Ft.) or Run No.	Blows / 6" or RQD (%)	Sample Recovery / Sample Length	Lithology Change (Depth/FL) or Screened Interval	MATERIAL DESCRIPTION: Soil Density/ Consistency or Rock Hardness	Color	Material Classification	USCS *	Remarks	PID/FID Reading (ppm): Sample	Sampler BZ	Borehole**	Driller BZ**
						Brn	Loam, grass, roots		moist				
						↓	clayey silt						
						Red Brn	micaceous silt						
5												0	
						Brn Red	weathered rock (siltstone)						
							siltstone		driller: hard rock				
10												0	
15												0	
20												0	
25						↓	↓					0	

* When rock coring, enter rock brokeness.

** Include monitor reading in 6 foot intervals @ borehole. Increase reading frequency if elevated reponse read.

Drilling Area Background (ppm): 0.0

Remarks: Air Rotary drilling 20' Rods; Drove in (8") steel casing to 18', 18'-70' open borehole (8"). Lithology described using driller comments and visually observed drilling cuttings.

Converted to Well: Yes _____ No _____ Well I.D. #: _____

Tetra Tech NUS, Inc.

BORING LOG

PROJECT NAME: NASJRB Willow Grove
PROJECT NUMBER: N2192/CTO-003
DRILLING COMPANY: Talon Drilling Co.
DRILLING RIG: REICH T-650-WII

BORING No.: OSMW125
DATE: 6-20-05
GEOLOGIST: Neb Dedic
DRILLER: Joe Dietthorn

Sample No. and Type or RQD	Depth (Ft.) or Run No.	Blows / 6" or RQD (%)	Sample Recovery / Sample Length	Lithology Change (Depth/Ft.) or Screened Interval	MATERIAL DESCRIPTION: Soil Density/ Consistency or Rock Hardness	Color	Material Classification	USCS *	Remarks	PID/FID Reading (ppm): Sample	Sampler BZ	Borehole**	Driller BZ**
						Grey Red	F. Sandstone		wet				
55									fracture(s)			0	
60												0	
65							M. Sandstone		stained			0	
									fracture(s)				
70												0	
				EOB									
75													

* When rock coring, enter rock brokeness.
** Include monitor reading in 6 foot intervals @ borehole. Increase reading frequency if elevated reponse read.

Drilling Area Background (ppm): 0.0

Remarks:

Converted to Well: Yes _____ No _____ Well I.D. #: _____

Tetra Tech NUS, Inc.

BORING LOG

PROJECT NAME: NASJRB Willow Grove
PROJECT NUMBER: N2192/CTO-003
DRILLING COMPANY: Talon Drilling Co.
DRILLING RIG: REICH T-650-WII

BORING No.: 05MW13I
DATE: 6-17-05 / 6-20-05
GEOLOGIST: Neb Dedic
DRILLER: Joe Dierthorn

Sample No. and Type or RQD	Depth (Ft.) or Run No.	Blows / 6" or RQD (%)	Sample Recovery / Sample Length	Lithology Change (Depth/Ft.) or Screened Interval	MATERIAL DESCRIPTION: Soil Density/ Consistency or Rock Hardness	Color	Material Classification	USCS *	Remarks	PID/FID Reading (ppm): Sample	Sampler BZ	Borehole**	Driller BZ**
						red brn	siltstone / f. sandstone						
30												0	
35												0	
40												0	
45						red	f. sandstone					0	
50												0	

* When rock coring, enter rock brokeness.
** Include monitor reading in 6 foot intervals @ borehole. Increase reading frequency if elevated reponse read.

Drilling Area Background (ppm): 0.0

Remarks:

Converted to Well: Yes _____ No _____ Well I.D. #: _____

Tetra Tech NUS, Inc.

BORING LOG

PROJECT NAME: NASJRB Willow Grove
PROJECT NUMBER: N2192/CTO-003
DRILLING COMPANY: Talon Drilling Co.
DRILLING RIG: REICH T-650-WII

BORING No.: 05MW13J
DATE: 6-20-05
GEOLOGIST: Neb Dedic
DRILLER: Joe Diethorn

Sample No. and Type or RQD	Depth (Ft.) or Run No.	Blows / 6" or RQD (%)	Sample Recovery / Sample Length	Lithology Change (Depth/Ft.) or Screened Interval	MATERIAL DESCRIPTION: Soil Density/ Consistency or Rock Hardness	Color	Material Classification	USCS*	Remarks	PID/FID Reading (ppm): Sample	Sampler BZ	Borehole**	Driller BZ**
						Red	Siltstone / Mudstone						
80												0	
85									5-> gpm			0	
									fracture				
90												0	
						Gray Red	Sandstone/Siltstone						
95												0	
100												0	

* When rock coring, enter rock brokeness.
** Include monitor reading in 6 foot intervals @ borehole. Increase reading frequency if elevated reponse read.

Drilling Area Background (ppm): 0.0

Remarks:

Converted to Well: Yes _____ No _____ Well I.D. #: _____

Tetra Tech NUS, Inc.

BORING LOG

PROJECT NAME: NASJRB Willow Grove
PROJECT NUMBER: N2192/CTO-003
DRILLING COMPANY: Talon Drilling Co.
DRILLING RIG: REICH T-650-WII

BORING No.: OSMW13I
DATE: 6-20-05
GEOLOGIST: Neb Dedic
DRILLER: Joe Dierthorn

Sample No. and Type or RQD	Depth (Ft.) or Run No.	Blows / 6" or RQD (%)	Sample Recovery / Sample Length	Lithology Change (Depth/Ft.) or Screened Interval	MATERIAL DESCRIPTION: Soil Density/ Consistency or Rock Hardness	Color	Material Classification	USCS *	Remarks	PID/FID Reading (ppm): Sample	Sampler BZ	Borehole**	Driller BZ**
						Red	Sandstone						
							↓						
							↓						
							↓						
130						Wh gy	Sandstone					0	
						↓	↓						
						↓	↓						
						↓	↓						
						↓	↓						
135						↓	↓					0	
						↓	↓						
						↓	↓						
						↓	↓						
						↓	↓						
140						Gry red	Sandstone					0	
						↓	↓						
						↓	↓						
						↓	↓						
						↓	↓						
145						↓						0	
						↓	↓						
						↓	↓						
						↓	↓						
						↓	↓						
150						↓	↓					0	

* When rock coring, enter rock brokeness.

** Include monitor reading in 6 foot intervals @ borehole. Increase reading frequency if elevated reponse read.

Remarks:

Drilling Area Background (ppm): 0-0

Converted to Well: Yes _____ No _____ Well I.D. #: _____

Tetra Tech NUS, Inc.

BORING LOG

PROJECT NAME: NASJRB Willow Grove
PROJECT NUMBER: N2192/CTO-003
DRILLING COMPANY: Talon Drilling Co.
DRILLING RIG: REICH T-650-WII

BORING No.: 05MW13J
DATE: 6-20-05
GEOLOGIST: Neb Dedic
DRILLER: Joe Dieffenbach

Sample No. and Type or RQD	Depth (Ft.) or Run No.	Blows / 6" or RQD (%)	Sample Recovery / Sample Length	Lithology Change (Depth/Ft.) or Screened Interval	MATERIAL DESCRIPTION: Soil Density/ Consistency or Rock Hardness	Color	Material Classification	USCS *	Remarks	PID/FID Reading (ppm): Sample	Sampler BZ	Borehole**	Driller BZ**
						LMY GRY	sandstone						
180									60-80 gpm ?			0	
				EOB									
185													
190													
195													
200													

* When rock coring, enter rock brokeness.

** Include monitor reading in 6 foot intervals @ borehole. Increase reading frequency if elevated reponse read.

Drilling Area Background (ppm): 0.0

Remarks:

Converted to Well: Yes _____ No _____ Well I.D. #: _____

Tetra Tech NUS, Inc.

BORING LOG

PROJECT NAME: NASJRB Willow Grove
PROJECT NUMBER: N2192/CTO-003
DRILLING COMPANY: Talon Drilling Co.
DRILLING RIG: REICH T-650-WII

BORING No.: 05MW14I
DATE: 6-21-05
GEOLOGIST: Neb Dedic
DRILLER: Joe Diethorn

Sample No. and Type or RQD	Depth (Ft.) or Run No.	Blows / 6" or RQD (%)	Sample Recovery / Sample Length	Lithology Change (Depth/Ft.) or Screened Interval	MATERIAL DESCRIPTION: Soil Density/ Consistency or Rock Hardness	Color	Material Classification	USCS *	Remarks	PID/FID Reading (ppm): Sample	Sampler BZ	Borehole**	Driller BZ**
						Red Brn	siltstone		dry-p				
						↓	↓						
						gry Red	sandstone		stained				
30												0	
35												0	
40												0	
45						wh gry	sandstone					0	
50												0	

* When rock coring, enter rock brokeness.
** Include monitor reading in 6 foot intervals @ borehole. Increase reading frequency if elevated reponse read.

Drilling Area Background (ppm): 0.0

Remarks:

Converted to Well: Yes _____ No _____ Well I.D. #: _____

Tetra Tech NUS, Inc.

BORING LOG

PROJECT NAME: NASJRB Willow Grove
PROJECT NUMBER: N2192/CTO-003
DRILLING COMPANY: Talon Drilling Co.
DRILLING RIG: REICH T-650-WII

BORING No.: 05MW14I
DATE: 6-21-05
GEOLOGIST: Neb Dedic
DRILLER: Joe Diethorn

Sample No. and Type or RQD	Depth (Ft.) or Run No.	Blows / 6" or RQD (%)	Sample Recovery / Sample Length	Lithology Change (Depth/Ft.) or Screened Interval	MATERIAL DESCRIPTION: Soil Density/ Consistency or Rock Hardness	Color	Material Classification	USCS *	Remarks	PID/FID Reading (ppm): Sample	Sampler BZ	Borehole**	Driller BZ**
						wh gry	sandstone		red-brn silt				
									wet 3-5 ppm?				
80						wh gry	sandstone		brn mud			0	
85												0	
90												0	
95									red brn mud			0	
100												0	

* When rock coring, enter rock brokeness.
** Include monitor reading in 6 foot intervals @ borehole. Increase reading frequency if elevated reponse read.

Drilling Area Background (ppm): 0.0

Remarks:

Converted to Well: Yes _____ No _____ Well I.D. #: _____

Tetra Tech NUS, Inc.

BORING LOG

PROJECT NAME: NASJRB Willow Grove
PROJECT NUMBER: N2192/CTO-003
DRILLING COMPANY: Talon Drilling Co.
DRILLING RIG: REICH T-650-WII

BORING No.: OSMW14T
DATE: 6-21-05
GEOLOGIST: Neb Dedic
DRILLER: Joe Dipthorn

Sample No. and Type or RQD	Depth (Ft.) or Run No.	Blows / 6" or RQD (%)	Sample Recovery / Sample Length	Lithology Change (Depth/Ft.) or Screened Interval	MATERIAL DESCRIPTION: Soil Density/ Consistency or Rock Hardness	Color	Material Classification	USCS *	Remarks	PID/FID Reading (ppm): Sample	Sampler BZ	Borehole**	Driller BZ**
						lt gy	sandstone		stained				
									slightly				
130												0	
135												0	
140												0	
145												0	
						gry red	sandstone		stained				
150				EOB					~20 gpm			0	

* When rock coring, enter rock brokeness.

** Include monitor reading in 6 foot intervals @ borehole. Increase reading frequency if elevated reponse read.

Drilling Area Background (ppm): 0.0

Remarks:

Converted to Well: Yes _____ No _____ Well I.D. #: _____

Tetra Tech NUS, Inc.

BORING LOG

PROJECT NAME: NASJRB Willow Grove
PROJECT NUMBER: N2192/CTO-003
DRILLING COMPANY: Talon Drilling Co.
DRILLING RIG: REICH T-650-WII

BORING No.: 05MW15I
DATE: 6-20-05 / 6-21-05
GEOLOGIST: Neb Dedic
DRILLER: Joe Diethorn

Sample No. and Type or RQD	Depth (Ft.) or Run No.	Blows / 6" or RQD (%)	Sample Recovery / Sample Length	Lithology Change (Depth/Ft.) or Screened Interval	MATERIAL DESCRIPTION: Soil Density/ Consistency or Rock Hardness	Color	Material Classification	USCS *	Remarks	PID/FID Reading (ppm): Sample	Sampler BZ	Borehole**	Driller BZ**
						Dry Red	Sandstone		damp				
30												0	
35												0	
40												0	
45												0	
50												0	

0-05
1-05

* When rock coring, enter rock brokeness.
** Include monitor reading in 6 foot intervals @ borehole. Increase reading frequency if elevated reponse read.

Drilling Area Background (ppm): 0.0

Remarks:

Converted to Well: Yes _____ No _____ Well I.D. #: _____

Tetra Tech NUS, Inc.

BORING LOG

PROJECT NAME: NASJRB Willow Grove
PROJECT NUMBER: N2192/CTO-003
DRILLING COMPANY: Talon Drilling Co.
DRILLING RIG: REICH T-650-WII

BORING No.: 05MW15T
DATE: 6-21-05
GEOLOGIST: Neb Dedic
DRILLER: Joe Diethorn

Sample No. and Type or RQD	Depth (Ft.) or Run No.	Blows / 6" or RQD (%)	Sample Recovery / Sample Length	Lithology Change (Depth/Ft.) or Screened Interval	MATERIAL DESCRIPTION: Soil Density/ Consistency or Rock Hardness	Color	Material Classification	USCS *	Remarks	PID/FID Reading (ppm): Sample	Sampler BZ	Borehole**	Driller BZ**
						gry	sandstone						
80									fracture ?			0	
85												0	
90						gry red	f. sandstone					0	
95												0	
						gry red	sandstone + siltstone						
100												0	

* When rock coring, enter rock brokeness.

** Include monitor reading in 6 foot intervals @ borehole. Increase reading frequency if elevated reponse read.

Drilling Area Background (ppm): 0.0

Remarks:

Converted to Well: Yes _____ No _____ Well I.D. #: _____

Tetra Tech NUS, Inc.

BORING LOG

PROJECT NAME: NASJRB Willow Grove
PROJECT NUMBER: N2192/CTO-003
DRILLING COMPANY: Talon Drilling Co.
DRILLING RIG: REICH T-650-WII

BORING No.: 05MW15I
DATE: 6-21-05
GEOLOGIST: Neb Dedic
DRILLER: Joe Diethorn

Sample No. and Type or RQD	Depth (Ft.) or Run No.	Blows / 6" or RQD (%)	Sample Recovery / Sample Length	Lithology Change (Depth/Ft.) or Screened Interval	MATERIAL DESCRIPTION: Soil Density/ Consistency or Rock Hardness	Color	Material Classification	USCS *	Remarks	PID/FID Reading (ppm): Sample	Sampler BZ	Borehole**	Driller BZ**
						gry	sandstone					0	
							+ blck siltstone/		structure?				
							shale						
130												0	
						Red gry	siltstone/shale						
135												0	
140												0	
						gry blck	siltstone / s. sandstone		stained				
145												0	
							sandstone						
150				EOB					10-15 gpm			0	

* When rock coring, enter rock brokeness.

** Include monitor reading in 6 foot intervals @ borehole. Increase reading frequency if elevated reponse read.

Drilling Area Background (ppm): 0.0

Remarks:

Converted to Well: Yes _____ No _____ Well I.D. #: _____

APPENDIX B

WELL NO.: 05MW12S

Tetra Tech NUS, Inc.

BEDROCK
MONITORING WELL SHEET
WELL INSTALLED IN BEDROCK

PROJECT NAS JRB Willow Grove
PROJECT NO. 2192
DATE BEGUN 6-20-05
FIELD GEOLOGIST Neb Dedic
GROUND ELEVATION _____ DATUM _____

LOCATION Site 5
BORING 05MW12S
DATE COMPLETED 8-1-05

DRILLER Joe Diethorn
DRILLING METHOD Air Rotary
DEVELOPMENT METHOD Pumping/submersible

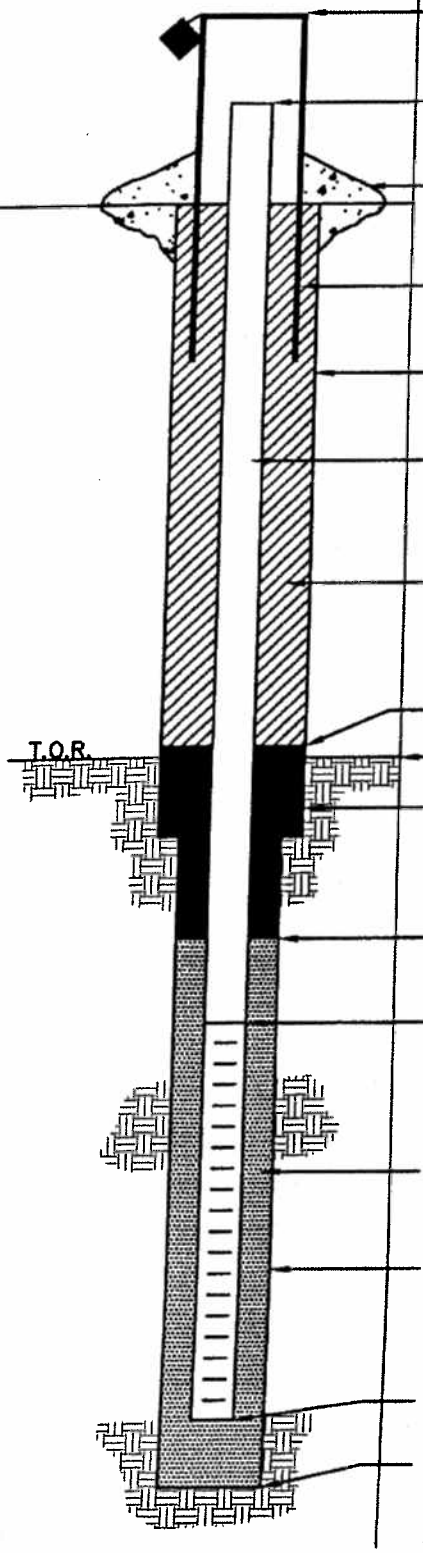

ELEVATION/HEIGHT OF TOP OF SURFACE CASING: /

ELEVATION/HEIGHT TOP OF RISER: /

TYPE OF SURFACE SEAL: cement

I.D. OF SURFACE CASING: 8"

DIAMETER OF HOLE: 8"

RISER PIPE I.D.: 2"
TYPE OF RISER PIPE: schedule 40 pvc

TYPE OF BACKFILL: cement grout

ELEVATION/DEPTH TOP OF SEAL: 138'

ELEVATION/DEPTH TOP OF BEDROCK: ~10'

TYPE OF SEAL: bentonite

ELEVATION/DEPTH TOP OF SAND: 146'

ELEVATION/DEPTH TOP OF SCREEN: 150'
TYPE OF SCREEN: schedule 40 pvc
SLOT SIZE x LENGTH: 0.02" x 20'
I.D. SCREEN: 2"

TYPE OF SAND PACK: #7 silica quartz sand

DIAMETER OF HOLE IN BEDROCK: 8"
CORE/REAM: _____

ELEVATION/DEPTH BOTTOM SCREEN: 170'
ELEVATION/DEPTH BOTTOM OF SAND: 170'
ELEVATION/DEPTH BOTTOM OF HOLE: 170'
BACKFILL MATERIAL BELOW SAND: _____

ACAD:FORM_MWNBR.dwg 07/20/99 INL

WELL NO.: 05MW145

Tetra Tech NUS, Inc.

BEDROCK
MONITORING WELL SHEET
WELL INSTALLED IN BEDROCK

PROJECT NAS JRB Willow Grove	LOCATION Site 5	DRILLER Joe Birthrow
PROJECT NO. 2192	BORING 05MW145	DRILLING METHOD Air Rotary
DATE BEGUN 6-17-05	DATE COMPLETED	DEVELOPMENT METHOD Pumping/Submersible
FIELD GEOLOGIST Neb Devic		
GROUND ELEVATION	DATUM	

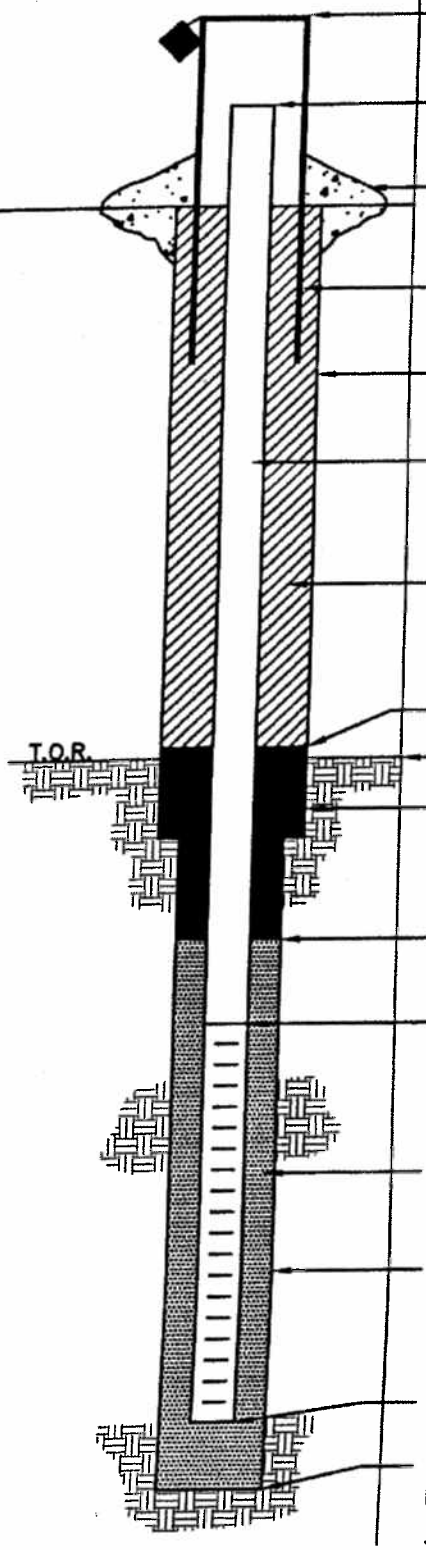

ELEVATION/HEIGHT OF TOP OF SURFACE CASING: /

ELEVATION/HEIGHT TOP OF RISER: /

TYPE OF SURFACE SEAL: Cement

I.D. OF SURFACE CASING: 8"

DIAMETER OF HOLE: 12"

RISER PIPE I.D.: 2"

TYPE OF RISER PIPE: Schedule 40 PVC

TYPE OF BACKFILL: cement grout

ELEVATION/DEPTH TOP OF SEAL: /28'

ELEVATION/DEPTH TOP OF BEDROCK:

TYPE OF SEAL: bentonite

ELEVATION/DEPTH TOP OF SAND: /32'

ELEVATION/DEPTH TOP OF SCREEN: /36'

TYPE OF SCREEN: Schedule 40 PVC

SLOT SIZE x LENGTH: 0.02 x 30'

I.D. SCREEN: 2"

TYPE OF SAND PACK: #2 Silica Quartz Sand

DIAMETER OF HOLE IN BEDROCK: 8"

CORE/REAM:

ELEVATION/DEPTH BOTTOM SCREEN: /66'

ELEVATION/DEPTH BOTTOM OF SAND: /66'

ELEVATION/DEPTH BOTTOM OF HOLE: /150'

BACKFILL MATERIAL BELOW SAND: bentonite

below installed deeper well/see 05MW147

ACAD:FORM_MWINBR.dwg 07/28/99 INL

WELL NO.: 05MW15S

Tetra Tech NUS, Inc.

BEDROCK
MONITORING WELL SHEET
WELL INSTALLED IN BEDROCK

PROJECT NAS JRB Willow Grove	LOCATION Site 5	DRILLER Joe Dirthorn
PROJECT NO. 2192	BORING 05MW15I	DRILLING METHOD Air Rotary
DATE BEGUN 6-20-05	DATE COMPLETED 8-4-05	DEVELOPMENT METHOD Pumping/Submersible
FIELD GEOLOGIST Neb Dedic		
GROUND ELEVATION	DATUM	

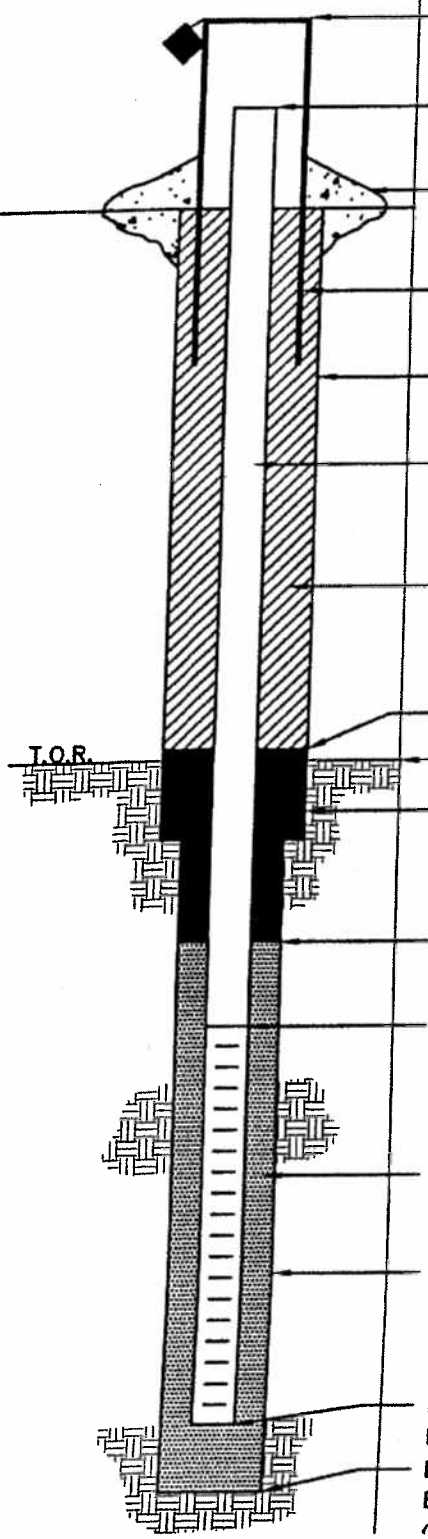

ELEVATION/HEIGHT OF TOP OF SURFACE CASING: 1

ELEVATION/HEIGHT TOP OF RISER: 1

TYPE OF SURFACE SEAL: cement

I.D. OF SURFACE CASING: 8"

DIAMETER OF HOLE: 12"

RISER PIPE I.D.: 2"

TYPE OF RISER PIPE: schedule 40 pvc

TYPE OF BACKFILL: cement grout

ELEVATION/DEPTH TOP OF SEAL: 124'

ELEVATION/DEPTH TOP OF BEDROCK: ~ 12'

TYPE OF SEAL: bentonite

ELEVATION/DEPTH TOP OF SAND: 127'

ELEVATION/DEPTH TOP OF SCREEN: 130'

TYPE OF SCREEN: schedule 40 pvc

SLOT SIZE x LENGTH: 0.02" x 15'

I.D. SCREEN: 2"

TYPE OF SAND PACK: #2 Silica Quartz Sand

DIAMETER OF HOLE IN BEDROCK: 8"

CORE/REAM:

ELEVATION/DEPTH BOTTOM SCREEN: 145'

ELEVATION/DEPTH BOTTOM OF SAND: 150'

ELEVATION/DEPTH BOTTOM OF HOLE: 150'

BACKFILL MATERIAL BELOW SAND: bentonite, cement grout below installed deeper well/see 05MW15T

ACAD: FORM_MWINBR.dwg 07/20/99 INL

APPENDIX C

APPENDIX C

WILLOW GROVE - SITE 5
FORMER FIRE TRAINING AREA

WELL CONSTRUCTION DETAILS

Well	Well Depth (feet bgs)	Screen Interval (feet bgs)	Elevation (TOC)
05MW01S	32	12 - 32	364.11
05MW01SI	84.5	74.5 - 84.5	363.64
05MW01I	135	125 - 135	363.99
05MW02S	30	10 - 30	365.48
05MW03S	31	11 - 31	367.18
05MW03I	128	118 - 128	367.35
05MW04S	30	10 - 30	365.62
05MW04I	84.5	74.5 - 84.5	364.75
05MW05S	40	20 - 40	359.92
05MW05I	209.5	189.5 - 209.5	358.89
05MW06S	37.5	17.5 - 37.5	362.38
05MW06I	84	74 - 84	361.08
05MW07S	26	6 - 26	360.73
05MW07I	84	74 - 84	360.2
05MW08S	36	26 - 36	360.88
05MW08SI	65	55 - 65	360.92
05MW08I	99	89 - 99	361.02
05MW09S	32	27 - 32	361.91
05MW09SI	74	59 - 74	361.74
05MW09I	106	96 - 106	362.11
05MW10S	32	22 - 32	362.54
05MW10SI	94	79 - 94	362.44
05MW10I	126	116 - 126	362.48
05MW11S	25	20 - 25	349.5
05MW11I	50	40 - 50	349.51
05MW11D	149	139 - 149	348.96
05MW12I	113.5	103.5 - 113.5	365.98
05MW12S	70	50 - 70	365.9
05MW13I	142	127 - 142	363.88
05MW14S	66	36 - 66	359.81
05MW14I	150	130 - 150	359.84
05MW15S	45	30 - 45	354.61
05MW15I	150	140 - 150	354.55

TOC = Top of casing
bgs = Below ground surface

APPENDIX D

James M. Stewart, Inc. - Land Surveyors

9622 Evans Street Philadelphia Pennsylvania 19115

Telephone: 215-969-1577 Fax: 215-969-0338 Email: jmssurveys@comcast.net

Willow Gove Naval Air Station
Site 05 - Fire Training Area
Willow Grove - Pennsylvania

Project #: 3516
Horizontal Datum: Pennsylvania State Plane Coordinates NAD 83 - South Zone
Vertical Datum: NAVD 88
Monuments Used: Site Datum Provided By Client (Tie To "NGS PITCAIRN A" And Verified)

August 30, 2005

	Elevations			Coordinates			
Monitoring Wells	Ground	Inner	Protective	Northing	Easting	Date of Survey	Comments
05MW07I	N/A	360.67	N/A	323324.70	2695447.79	August 29, 2005	
05MW07S	N/A	360.16	N/A	323315.24	2695440.94	August 29, 2005	Held As Benchmark
05MW09I	N/A	362.11	N/A	323509.35	2695497.87	August 29, 2005	
05MW10I	N/A	362.48	N/A	323475.90	2695399.07	August 29, 2005	
05MW12S	364.47	365.90	366.21	323763.31	2695429.98	August 29, 2005	
05MW13I	362.85	363.88	364.27	323723.15	2694688.86	August 29, 2005	
05MW14I	358.71	359.84	360.15	323456.03	2695009.58	August 29, 2005	
05MW14S	358.71	359.81	360.15	323456.18	2695009.48	August 29, 2005	
05MW15I	353.82	354.55	355.17	323395.01	2694533.60	August 29, 2005	
05MW15S	353.82	354.61	355.17	323394.89	2694533.35	August 29, 2005	

APPENDIX E

Tetra Tech NUS, Inc.

GROUNDWATER LEVEL MEASUREMENT SHEET

Project Name: NAS JRB Willow Grove
Project No.: 2192
Location:
Personnel: C.Meyer N.Dedic
Weather Conditions:
Measuring Device: Herron Dipper T
Tidally Influenced: Yes ___ No ___
Remarks:

Well or Piezometer Number	Date	Time	Elevation of Reference Point (feet)*	Total Well Depth (feet)*	Water Level Indicator Reading (feet)*	Thickness of Free Product (feet)*	Groundwater Elevation (feet)*	Comments
05MW01S	8/16/2005		364.11		25.87	---	338.24	
05MW01SI	8/16/2005		363.64		25.88	---	337.76	
05MW01I	8/16/2005		363.99		26.49	---	337.5	
05MW02S	8/16/2005		365.48		26.57	---	338.91	
O5MW03S	8/16/2005		367.18		25.71	---	341.47	
05MW03I	8/16/2005		367.35		29.93	---	337.42	
05MW04S	8/16/2005		365.62		25.79	---	339.83	
05MW04I	8/16/2005		364.75		27.38	---	337.37	
05MW05S	8/16/2005		359.92		22.04	---	337.88	
05MW05I	8/16/2005		358.89		37.09	---	321.8	
05MW06S	8/16/2005		362.38		23.95	---	338.43	
05MW06I	8/16/2005		361.08		23.5	---	337.58	
05MW07S	8/16/2005		360.16		22.35	---	337.81	
05MW07I	8/16/2005		360.67		23.13	---	337.54	
05MW08S	8/16/2005		360.88		22.84	---	338.04	
05MW08SI	8/16/2005		360.92		23.21	---	337.71	
05MW08I	8/16/2005		361.02		23.33	---	337.69	
05MW09S	8/16/2005		361.91		23.66	---	338.25	
05MW09SI	8/16/2005		361.74		24.01	---	337.73	
05MW09I	8/16/2005		362.11		24.58	---	337.53	
05MW10S	8/16/2005		362.54		24.42	---	338.12	
05MW10SI	8/16/2005		362.44		24.73	---	337.71	
05MW10I	8/16/2005		362.48		25.01	---	337.47	
05MW11S	8/16/2005		349.5		11.94	---	337.56	
05MW11SI	8/16/2005		349.51		11.98	---	337.53	

* All measurements to the nearest 0.01 foot

Tetra Tech NUS, Inc.

GROUNDWATER LEVEL MEASUREMENT SHEET

Project Name: NAS JRB Willow Grove
Project No.: 2192
Location:
Personnel: C.Meyer N.Dedic
Weather Conditions:
Measuring Device: Herron Dipper T
Tidally Influenced: Yes ___ No ___
Remarks:

Well or Piezometer Number	Date	Time	Elevation of Reference Point (feet)*	Total Well Depth (feet)*	Water Level Indicator Reading (feet)*	Thickness of Free Product (feet)*	Groundwater Elevation (feet)*	Comments
05MW11I	8/16/2005		348.96		27.12	---	321.84	
05MW12S	8/16/2005		365.9		28.23	---	337.67	
05MW12I	8/16/2005		365.98		28.44	---	337.54	
05MW13I	8/16/2005		363.88		26.88	---	337	
05MW14S	8/16/2005		359.81		22.2	---	337.61	
05MW14I	8/16/2005		359.84		22.41	---	337.43	
05MW15S	8/16/2005		354.61		16.87	---	337.74	
05MW15I	8/16/2005		354.55		17.09	---	337.46	

* All measurements to the nearest 0.01 foot

Tetra Tech NUS, Inc.

GROUNDWATER LEVEL MEASUREMENT SHEET

Project Name: NAS JRB Willow Grove **Project No.:** 2192
Location: **Personnel:** D. Whalen
Weather Conditions: sunny, 80 **Measuring Device:** Solinst
Tidally Influenced: Yes ___ No ___ **Remarks:**

Well or Piezometer Number	Date	Time	Elevation of Reference Point (feet)*	Total Well Depth (feet)*	Water Level Indicator Reading (feet)*	Thickness of Free Product (feet)*	Groundwater Elevation (feet)*	Comments
05MW01S	8/25/2005		364.11		26.63	---	337.48	
05MW01SI	8/25/2005		363.64		26.53	---	337.11	
05MW01I	8/25/2005		363.99		27.04	---	336.95	
05MW02S	8/25/2005		365.48		27.33	---	338.15	
O5MW03S	8/25/2005		367.18		27.33	---	339.85	
05MW03I	8/25/2005		367.35		30.54	---	336.81	
05MW04S	8/25/2005		365.62		26.59	---	339.03	
05MW04I	8/25/2005		364.75		27.96	---	336.79	
05MW05S	8/25/2005		359.92		22.65	---	337.27	
05MW05I	8/25/2005		358.89		37.67	---	321.22	
05MW06S	8/25/2005		362.38		24.68	---	337.7	
05MW06I	8/25/2005		361.08		24.11	---	336.97	
05MW07S	8/25/2005		360.16		22.92	---	337.24	
05MW07I	8/25/2005		360.67		23.62	---	337.05	
05MW08S	8/25/2005		360.88		23.49	---	337.39	
05MW08SI	8/25/2005		360.92		23.79	---	337.13	
05MW08I	8/25/2005		361.02		23.89	---	337.13	
05MW09S	8/25/2005		361.91		24.38	---	337.53	
05MW09SI	8/25/2005		361.74		24.61	---	337.13	
05MW09I	8/25/2005		362.11		25.13	---	336.98	
05MW10S	8/25/2005		362.54		25.13	---	337.41	
05MW10SI	8/25/2005		362.44		25.32	---	337.12	
05MW10I	8/25/2005		362.48		25.58	---	336.9	
05MW11S	8/25/2005		349.5		12.54	---	336.96	
05MW11SI	8/25/2005		349.51		12.52	---	336.99	

* All measurements to the nearest 0.01 foot

Tetra Tech NUS, Inc.

GROUNDWATER LEVEL MEASUREMENT SHEET

Project Name: NAS JRB Willow Grove **Project No.:** 2192
Location: **Personnel:** D. Whalen
Weather Conditions: sunny, 80 **Measuring Device:** Solinst
Tidally Influenced: Yes ___ No ___ **Remarks:**

Well or Piezometer Number	Date	Time	Elevation of Reference Point (feet)*	Total Well Depth (feet)*	Water Level Indicator Reading (feet)*	Thickness of Free Product (feet)*	Groundwater Elevation (feet)*	Comments
05MW11I	8/25/2005		348.96		27.72	---	321.24	
05MW12S	8/25/2005		365.9		28.88	---	337.02	
05MW12I	8/25/2005		365.98		29.04	---	336.94	
05MW13I	8/25/2005		363.88		27.52	---	336.36	
05MW14S	8/25/2005		359.81		22.82	---	336.99	
05MW14I	8/25/2005		359.84		22.94	---	336.9	
05MW15S	8/25/2005		354.61		17.41	---	337.2	
05MW15I	8/25/2005		354.55		17.69	---	336.86	

* All measurements to the nearest 0.01 foot

Tetra Tech NUS, Inc.

GROUNDWATER LEVEL MEASUREMENT SHEET

Project Name: NASJRB Willow Grove
Project No.: 2192
Location:
Personnel: VS, KW
Weather Conditions: High clouds, 65
Measuring Device: Solinst
Tidally Influenced: Yes ___ No ___
Remarks:

Well or Piezometer Number	Date	Time	Elevation of Reference Point (feet)*	Total Well Depth (feet)*	Water Level Indicator Reading (feet)*	Thickness of Free Product (feet)*	Groundwater Elevation (feet)*	Comments
05MW01S	5/5/2006		364.11		23.45	---	340.66	
05MW01SI	5/5/2006		363.64		23.67	---	339.97	
05MW01I	5/5/2006		363.99		24.52	---	339.47	
05MW02S	5/5/2006		365.48		24.25	---	341.23	
O5MW03S	5/5/2006		367.18		23.5	---	343.68	
05MW03I	5/5/2006		367.35		27.64	---	339.71	
05MW04S	5/5/2006		365.62		23.57	---	342.05	
05MW04I	5/5/2006		364.75		25.06	---	339.69	
05MW05S	5/5/2006		359.92		19.88	---	340.04	
05MW05I	5/5/2006		358.89		34.39	---	324.5	
05MW06S	5/5/2006		362.38		21.53	---	340.85	
05MW06I	5/5/2006		361.08		21.42	---	339.66	
05MW07S	5/5/2006		360.16		20.36	---	339.8	
05MW07I	5/5/2006		360.67		21.18	---	339.49	
05MW08S	5/5/2006		360.88		20.6	---	340.28	
05MW08SI	5/5/2006		360.92		21.11	---	339.81	
05MW08I	5/5/2006		361.02		21.25	---	339.77	
05MW09S	5/5/2006		361.91		21.22	---	340.69	
05MW09SI	5/5/2006		361.74		21.87	---	339.87	
05MW09I	5/5/2006		362.11		22.61	---	339.5	
05MW10S	5/5/2006		362.54		22.03	---	340.51	
05MW10SI	5/5/2006		362.44		22.61	---	339.83	
05MW10I	5/5/2006		362.48		23.07	---	339.41	
05MW11S	5/5/2006		349.5		9.97	---	339.53	
05MW11SI	5/5/2006		349.51		10.03	---	339.48	

* All measurements to the nearest 0.01 foot

Tetra Tech NUS, Inc.

GROUNDWATER LEVEL MEASUREMENT SHEET

Project Name: NASJRB Willow Grove
Project No.: 2192
Location:
Personnel: VS, KW
Weather Conditions: High clouds, 65
Measuring Device: Solinst
Tidally Influenced: Yes ___ No ___
Remarks:

Well or Piezometer Number	Date	Time	Elevation of Reference Point (feet)*	Total Well Depth (feet)*	Water Level Indicator Reading (feet)*	Thickness of Free Product (feet)*	Groundwater Elevation (feet)*	Comments
05MW11I	5/5/2006		348.96		24.43	---	324.53	
05MW12S	5/5/2006		365.9		25.97	---	339.93	
05MW12I	5/5/2006		365.98		26.15	---	339.83	
05MW13I	5/5/2006		363.88		24.64	---	339.24	
05MW14S	5/5/2006		359.81		20.05	---	339.76	
05MW14I	5/5/2006		359.84		20.47	---	339.37	
05MW15S	5/5/2006		354.61		14.43	---	340.18	
05MW15I	5/5/2006		354.55		15.24	---	339.31	
03MW08S	5/5/2006		365.59		25.87		339.72	
03MW08D	5/5/2006		365.63		26.99		338.64	

* All measurements to the nearest 0.01 foot

Tetra Tech NUS, Inc.

GROUNDWATER SAMPLE LOG SHEET

Project Site Name: NASJRB Willow Grove
Project No.: 2192

[] Domestic Well Data
[X] Monitoring Well Data
[] Other Well Type:
[] QA Sample Type:

Sample ID No.: 05MW01S
Sample Location: Site 5
Sampled By: N. Redlin
C.O.C. No.:
Type of Sample:
[X] Low Concentration
[] High Concentration

SAMPLING DATA:

	Color Visual	pH Standard	S.C. mS/cm	Temp. °C	Turbidity NTU	DO mg/l	ORP mV	TBD
Date: 8-18-05								
Time: 1315								
Method: Grundfos Redi-Flo	clear	5.58	0.218	20.30	0	0.59	113	

PURGE DATA:

	Volume	pH	S.C.	Temp. (C)	Turbidity	DO	ORP	TBD
Date:								
Method:								
Monitor Reading (ppm): 14.5								
Well Casing Diameter & Material Type: 4", PVC		See	Low	Flow				
Total Well Depth (TD): 33.8								
Static Water Level (WL): 26.09		Purge	Data	Sheet				
One ~~Casing~~ Screen Volume(~~gal~~/L): 49.5								
Start Purge (hrs): 1155								
End Purge (hrs): 1315								
Total Purge Time (min): 80								
Total Vol. Purged (~~gal~~/L): 22.5								

SAMPLE COLLECTION INFORMATION:

Analysis	Preservative	Container Requirements	Collected
TCL VOC	HCL	40 ml VOA Vials	6
1,4-Dioxane	4 C	1 Liter Amber Glass	2

OBSERVATIONS / NOTES:

* Water column partially covers screen length, ~ 5'-7', therefore not waited to purge extra amount (49.5 L) of GW.

Circle if Applicable:

MS/MSD | Duplicate ID No.: DUP-03

Signature(s): N. Redlin

TBD: To Be Determined

LOW FLOW PURGE DATA SHEET

PROJECT SITE NAME: NAS JRB Willow Grove
PROJECT NUMBER: 2192

WELL ID.: 05MW015
DATE: 8-18-05

Time (Hrs.)	Water Level (Ft. below TOC)	Flow (mL/Min.)	pH (S.U.)	S. Cond. (mS/cm)	Turb. (NTU)	DO (mg/L)	Temp. (Celcius)	ORP mV	Salinity % or ppt	Comments
1155	26.09	300	6.74	0.231	8	5.59	17.36	104	0.01	
1200	26.31	300	6.10	0.225	14	3.43	18.03	96	0.01	
1205	26.37	200	6.03	0.224	12	3.15	18.62	97	0.01	
1210	26.38	200	5.99	0.222	0	3.05	19.53	99	0.01	
1215	26.39	200	6.00	0.222	7	2.78	19.88	101	0.01	
1220	26.45	300	5.99	0.222	13	2.54	20.15	103	0.01	
1225	26.51	300	5.99	0.220	14	2.17	20.17	104	0.01	
1230	26.51	300	5.98	0.220	15	1.80	20.20	105	0.01	
1235	26.51	300	5.98	0.220	18	1.75	20.21	107	0.01	
1240	26.52	300	5.99	0.220	16	1.63	20.24	108	0.01	
1245	26.52	300	5.99	0.219	14	1.47	20.23	109	0.01	
1250	26.53	300	5.99	0.219	12	1.32	20.21	110	0.01	
1255	26.54	300	5.98	0.218	6	1.27	20.25	111	0.01	
1300	26.57	300	5.98	0.218	0	1.13	20.22	111	0.01	
1305	26.58	300	5.98	0.218	0	1.06	20.25	112	0.01	
1310	26.60	300	5.97	0.218	0	1.01	20.24	113	0.01	
1315	26.61	300	5.98	0.218	0	0.99	20.30	113	0.01	Collected Sample

SIGNATURE(S): _____

Tetra Tech NUS, Inc.

GROUNDWATER SAMPLE LOG SHEET

Page___ of ___

Project Site Name: NASJRB Willow Grove
Project No.: 2192

[] Domestic Well Data
[X] Monitoring Well Data
[] Other Well Type:
[] QA Sample Type:

Sample ID No.: 05-MW01-SI
Sample Location: MW01-SI
Sampled By:
C.O.C. No.:
Type of Sample:
[X] Low Concentration
[] High Concentration

SAMPLING DATA:

	Color Visual	pH Standard	S.C. mS/cm	Temp. °C	Turbidity NTU	DO mg/l	ORP mV	TBD
Date: 8/18/05								
Time: 1330								
Method: Redi-flo-2 Pump	clear	4.83	0.196	17.52	2.0	5.12	156	

PURGE DATA:

	Volume	pH	S.C.	Temp. (C)	Turbidity	DO	ORP	TBD
Date: 8/18/05								
Method: Redi-flo-2 Pump								
Monitor Reading (ppm): 14.80								
Well Casing Diameter & Material Type: 4" PVC		(See Low Flow Purge Data Sheet)						
Total Well Depth (TD): 86.32								
Static Water Level (WL): 25.95								
One Casing Volume(gal/L):								
Start Purge (hrs): 1200								
End Purge (hrs): 1325								
Total Purge Time (min): 85								
Total Vol. Purged (gal/L): 12								

SAMPLE COLLECTION INFORMATION:

Analysis	Preservative	Container Requirements	Collected
TCL VOC	HCL	40 ml VOA Vials	3
1,4-Dioxane	4 C	1 Liter Amber Glass	1

OBSERVATIONS / NOTES:

Circle if Applicable:

MS/MSD	Duplicate ID No.:

Signature(s):

TBD: To Be Determined

LOW FLOW PURGE DATA SHEET

PROJECT SITE NAME: NASJRB Willow Grove
PROJECT NUMBER: 2192
WELL ID.: 05-MW01-SE
DATE: 8/18/05

Time (Hrs.)	Water Level (Ft. below TOC)	Flow (mL/Min.)	pH (S.U.)	S. Cond. (mS/cm)	Turb. (NTU)	DO (mg/L)	Temp. (Celcius)	ORP mV	Salinity % or ppt	Comments
1200	25.95	500	4.82	0.189	12	15.81	16.24	196	0.0	
1205	26.81	500	4.81	0.190	9.8	12.67	16.38	191	0.0	
1210	26.85	500	4.85	0.192	5.4	10.01	16.46	181	0.0	
1215	26.85	500	4.86	0.201	3.3	9.56	16.49	175	0.0	
1220	26.85	500	4.87	0.192	3.0	7.80	16.61	167	0.0	
1225	26.85	500	4.85	0.196	3.5	6.88	16.73	165	0.0	
1230	26.85	500	4.85	0.196	2.7	6.35	16.88	162	0.0	
1235	26.85	500	4.84	0.195	3.0	6.19	16.57	161	0.0	
1240	26.85	500	4.80	0.196	2.9	5.97	16.58	161	0.0	
1245	26.85	500	4.82	0.196	2.7	5.84	16.94	158	0.0	
1250	26.85	500	4.82	0.196	1.6	5.79	16.73	160	0.0	
1255	26.85	500	4.83	0.196	2.2	5.67	16.89	158	0.0	
1300	26.85	500	4.83	0.196	2.4	5.53	17.06	157	0.0	
1305	26.85	500	4.83	0.196	2.5	5.43	16.90	155	0.0	
1310	26.85	500	4.83	0.196	2.2	5.36	17.15	155	0.0	
1315	26.85	500	4.83	0.196	2.2	5.30	17.01	154	0.0	
1320	26.85	500	4.83	0.196	2.0	5.19	17.41	156	0.0	
1325	26.85	500	4.83	0.196	2.0	5.12	17.52	156	0.0	
1330	Sample	05-MW01-SE								

SIGNATURE(S): _____

PAGE___OF___

Tetra Tech NUS, Inc.

GROUNDWATER SAMPLE LOG SHEET

Project Site Name: NASJRB Willow Grove
Project No.: 2192

[] Domestic Well Data
[X] Monitoring Well Data
[] Other Well Type:
[] QA Sample Type:

Sample ID No.: 05MW01T
Sample Location: Site 5
Sampled By: N. Nerlic
C.O.C. No.:
Type of Sample:
[X] Low Concentration
[] High Concentration

SAMPLING DATA:

	Color Visual	pH Standard	S.C. mS/cm	Temp. °C	Turbidity NTU	DO mg/l	ORP mV	TBD
Date: 8-17-05								
Time: 1325								
Method: Grundfos Redi-flo	clear	7.22	0.305	18.83	6	3.83	48	

PURGE DATA:

	Volume	pH	S.C.	Temp. (C)	Turbidity	DO	ORP	TBD
Date:								
Method:								
Monitor Reading (ppm): 2.5								
Well Casing Diameter & Material Type: 2" PVC			See Low Flow Purge Data Sheet					
Total Well Depth (TD): 135								
Static Water Level (WL): 26.48								
One ~~Casing~~ Screen Volume(~~gal~~/L): 6.2								
Start Purge (hrs): 1215								
End Purge (hrs): 1325								
Total Purge Time (min): 70								
Total Vol. Purged (~~gal~~/L): 11.6								

SAMPLE COLLECTION INFORMATION:

Analysis	Preservative	Container Requirements	Collected
TCL VOC	HCL	40 ml VOA Vials	3
1,4-Dioxane	4 C	1 Liter Amber Glass	1

OBSERVATIONS / NOTES:

Circle if Applicable:

MS/MSD	Duplicate ID No.:

Signature(s): N. Nerlic

TBD: To Be Determined

LOW FLOW PURGE DATA SHEET

PROJECT SITE NAME: NAS JRB Willow Grove
PROJECT NUMBER: 2192

WELL ID.: 05MW01I
DATE: 8-17-05

Time (Hrs.)	Water Level (Ft. below TOC)	Flow (mL/Min.)	pH (S.U.)	S. Cond. (mS/cm)	Turb. (NTU)	DO (mg/L)	Temp. (Celcius)	ORP mV	Salinity % or ppt	Comments
1215	26.48	200	7.06	0.304	0	8.52	18.72	275	0.01	
1220	27.39	200	7.15	0.300	18	6.28	18.61	268	0.01	
1225	27.41	180	7.19	0.310	120	5.72	18.47	153	0.01	
1230	27.37	180	7.20	0.310	110	5.44	18.74	121	0.01	
1235	27.32	160	7.22	0.311	75	4.92	18.88	92	0.01	
1240	27.24	160	7.25	0.311	40	4.70	18.90	80	0.01	
1245	27.27	160	7.23	0.306	25	4.31	19.62	76	0.01	
1250	27.25	150	7.24	0.307	21	4.39	18.94	70	0.01	
1255	27.33	160	7.24	0.307	19	4.27	18.77	63	0.01	
1300	27.33	160	7.23	0.306	17	4.12	18.84	58	0.01	
1305	27.31	160	7.22	0.302	7	3.74	19.36	54	0.01	
1310	27.31	160	7.22	0.303	5	3.78	18.55	52	0.01	
1315	27.31	160	7.22	0.304	5	3.81	18.21	50	0.01	
1320	27.34	160	7.21	0.299	5	3.76	19.08	47	0.01	
1325	27.33	160	7.22	0.305	5	3.83	18.33	48	0.01	

SIGNATURE(S): Neb Devic

Tetra Tech NUS, Inc.

GROUNDWATER SAMPLE LOG SHEET

Page___ of ___

Project Site Name: NASJRB Willow Grove
Project No.: 2192

[] Domestic Well Data
[X] Monitoring Well Data
[] Other Well Type:
[] QA Sample Type:

Sample ID No.: 05-MW02-S
Sample Location: MW02-S
Sampled By: CM
C.O.C. No.:
Type of Sample:
[X] Low Concentration
[] High Concentration

SAMPLING DATA:

	Color Visual	pH Standard	S.C. mS/cm	Temp. °C	Turbidity NTU	DO mg/l	ORP mV	TBD
Date: 8/17/05								
Time: 1115								
Method: Redi-flo-2 Pump	clear	4.20	0.127	17.2	0.0	9.14	218	

PURGE DATA:

	Volume	pH	S.C.	Temp. (C)	Turbidity	DO	ORP	TBD
Date: 8/19/05								
Method: Redi-flo-2 Pump								
Monitor Reading (ppm): 0.0								
Well Casing Diameter & Material Type: 4" PVC	(See Low Flow Purge Data Sheet)							
Total Well Depth (TD): 31.80								
Static Water Level (WL): 26.64								
One Casing Volume(gal/L):								
Start Purge (hrs): 0950								
End Purge (hrs): 1110								
Total Purge Time (min): 80								
Total Vol. Purged (gal/L): 10								

SAMPLE COLLECTION INFORMATION:

Analysis	Preservative	Container Requirements	Collected
TCL VOC	HCL	40 ml VOA Vials	3
1,4-Dioxane	4 C	1 Liter Amber Glass	1

OBSERVATIONS / NOTES:

Circle if Applicable:

MS/MSD	Duplicate ID No.:

Signature(s):

TBD: To Be Determined

LOW FLOW PURGE DATA SHEET

PROJECT SITE NAME: NAS JRB Willow Grove
PROJECT NUMBER: 2192

WELL ID.: 05-MWX02-S
DATE: 8/17/05

Time (Hrs.)	Water Level (Ft. below TOC)	Flow (mL/Min.)	pH (S.U.)	S. Cond. (mS/cm)	Turb. (NTU)	DO (mg/L)	Temp. (Celcius)	ORP mV	Salinity % or ppt	Comments
0950	26.65	500	4.22	0.140	14	12.42	15.14	216	0.0	
0955	26.73	500	4.22	0.136	7.8	11.62	15.75	217	0.0	
1000	26.74	500	4.24	0.134	4.3	11.07		217	0.0	
1005	26.75	500	4.26	0.132	2.7	10.27	15.89	218	0.0	
1010	26.72	500	4.28	0.130	1.5	9.70	15.94	218	0.0	
1015	26.72	500	4.26	0.129	0.85	9.10	16.58	218	0.0	
1020	26.72	500	4.28	0.129	0.32	9.11	16.70	218	0.0	
1025	26.72	500	4.29	0.128	0.25	9.05	16.84	217	0.0	
1030	26.72	500	4.25	0.127	0.10	9.45	16.84	218	0.0	
1035	26.72	500	4.24	0.127	0.53	9.62	16.86	218	0.0	
1040	26.72	500	4.24	0.127	0.80	9.84	16.89	217	0.0	
1045	26.72	500	4.26	0.127	0.20	9.68	16.95	217	0.0	
1050	26.72	500	4.21	0.127	0.25	9.44	16.98	217	0.0	
1055	26.70	500	4.20	0.127	0.10	9.24	16.98	218	0.0	
1100	26.70	500	4.20	0.127	0.00	9.19	17.00	217	0.0	
1105	26.70	500	4.20	0.127	0.00	9.14	17.02	218	0.0	

SIGNATURE(S): _____

PAGE___OF___

Tetra Tech NUS, Inc.

GROUNDWATER SAMPLE LOG SHEET

Project Site Name: NASJRB Willow Grove
Project No.: 2192

[] Domestic Well Data
[X] Monitoring Well Data
[] Other Well Type:
[] QA Sample Type:

Sample ID No.: 05MW035
Sample Location: Site 5
Sampled By: Neb Dedic
C.O.C. No.:
Type of Sample:
[X] Low Concentration
[] High Concentration

SAMPLING DATA:

	Color Visual	pH Standard	S.C. mS/cm	Temp. °C	Turbidity NTU	DO mg/l	ORP mV	TBD
Date: 8-16-05								
Time: 1545								
Method: Groundtos Rel. Flo	Clear	5.37	0.124	13.26	0	9.55	257	

PURGE DATA:

	Volume	pH	S.C.	Temp. (C)	Turbidity	DO	ORP	TBD
Date:								
Method:								
Monitor Reading (ppm): 0.0								
Well Casing Diameter & Material Type: 4" PVC		See Low Flow						
Total Well Depth (TD): 31		Purge Data Sheet						
Static Water Level (WL): 25.71								
One Casing Volume(gal/L): 49.5								
Start Purge (hrs): 14.25								
End Purge (hrs): 1545								
Total Purge Time (min): 80								
Total Vol. Purged (gal/L): 40.25								

SAMPLE COLLECTION INFORMATION:

Analysis	Preservative	Container Requirements	Collected
TCL VOC	HCL	40 ml VOA Vials	3
1,4-Dioxane	4 C	1 Liter Amber Glass	1

OBSERVATIONS / NOTES:

Circle if Applicable:

MS/MSD	Duplicate ID No.:

Signature(s): Neb Dedic

TBD: To Be Determined

LOW FLOW PURGE DATA SHEET

PROJECT SITE NAME: NAS JRB Willow Grove
PROJECT NUMBER: 2192

WELL ID.: OSMW3S
DATE: 8-16-05

Time (Hrs.)	Water Level (Ft. below TOC)	Flow (mL/Min.)	pH (S.U.)	S. Cond. (mS/cm)	Turb. (NTU)	DO (mg/L)	Temp. (Celcius)	ORP mV	Salinity % or ppt	Comments
1425	25.71	550	6.02	0.125	32	9.45	17.28	247	0.0	
1430	25.85	500	5.54	0.124	25	9.43	19.06	236	0.0	
1435	25.86	500	5.54	0.124	17	9.43	19.25	230	0.0	
1440	25.88	500	5.50	0.125	12	9.42	19.57	225	0.0	
1445	25.88	500	5.46	0.126	6	9.42	19.78	217	0.0	
1450	25.89	500	5.42	0.125	4	9.40	19.83	227	0.0	
1455	25.90	500	5.42	0.125	3	9.36	19.85	232	0.0	
1500	25.89	500	5.42	0.125	4	9.35	19.86	237	0.0	
1505	25.90	500	5.41	0.125	2	9.33	19.87	241	0.0	
1510	25.92	500	5.41	0.125	0	9.30	19.86	243	0.0	
1515	25.94	500	5.40	0.125	0	9.33	19.63	243	0.0	
1520	25.95	500	5.38	0.124	0	9.32	19.46	245	0.0	
1525	25.96	500	5.37	0.124	0	9.42	19.35	247	0.0	
1530	25.97	510	5.37	0.124	0	9.32	19.31	250	0.0	
1535	25.99	500	5.37	0.124	0	9.35	19.34	252	0.0	
1540	26.01	500	5.38	0.124	0	9.34	19.33	254	0.0	
1545	26.02	500	5.37	0.124	0	9.35	19.26	257	0.0	Collected sample

SIGNATURE(S): Neil Davis

Tetra Tech NUS, Inc.

GROUNDWATER SAMPLE LOG SHEET

Page___ of ___

Project Site Name: NASJRB Willow Grove
Project No.: 2192

[] Domestic Well Data
[X] Monitoring Well Data
[] Other Well Type:
[] QA Sample Type:

Sample ID No.: 05-MW03-I
Sample Location: MW03-I
Sampled By: CM
C.O.C. No.:
Type of Sample:
[X] Low Concentration
[] High Concentration

SAMPLING DATA:

	Color Visual	pH Standard	S.C. mS/cm	Temp. °C	Turbidity NTU	DO mg/l	ORP mV	TBD
Date: 8/16/05								
Time: 1550								
Method: Rediflo-2 Pump	Clear	4.52	0.165	17.35	8.3	8.92	166	

PURGE DATA:

	Volume	pH	S.C.	Temp. (C)	Turbidity	DO	ORP	TBD
Date: 8/16/05								
Method: Rediflo-2 Pump								
Monitor Reading (ppm): 0.0								
Well Casing Diameter & Material								
Type: 2" PVC		(See	Low	Flow	Purge	Data	Sheet)	
Total Well Depth (TD):								
Static Water Level (WL): 29.92								
One Casing Volume(gal/L):								
Start Purge (hrs): 1425								
End Purge (hrs): 1545								
Total Purge Time (min): 80								
Total Vol. Purged (gal/L): 6.0								

SAMPLE COLLECTION INFORMATION:

Analysis	Preservative	Container Requirements	Collected
TCL VOC	HCL	40 ml VOA Vials	6
1,4-Dioxane	4 C	1 Liter Amber Glass	2

OBSERVATIONS / NOTES:

Circle if Applicable:

MS/MSD

Duplicate ID No.: Dup-02 Assigned time 1735

Signature(s):

TBD: To Be Determined

LOW FLOW PURGE DATA SHEET

PROJECT SITE NAME: NASJRB - Willow Grove
PROJECT NUMBER: 2192

WELL ID.: 05-MW03-I
DATE: 8/16/05

Time (Hrs.)	Water Level (Ft. below TOC)	Flow (mL/Min.)	pH (S.U.)	S. Cond. (mS/cm)	Turb. (NTU)	DO (mg/L)	Temp. (Celcius)	ORP mV	Salinity % or ppt	Comments
1425	29.92	200	4.47	0.162	65	9.92	19.26	197	0.0	
1430	29.90	200	4.52	0.162	65	9.47	18.42	180	0.0	
1435	29.90	200	4.55	0.162	53	9.98	18.51	176	0.0	
1440	29.90	200	4.51	0.162	45	9.32	18.57	170	0.0	
1445	29.90	200	4.50	0.162	37	9.67	18.60	169	0.0	
1450	29.90	200	4.49	0.162	30	9.54	18.62	167	0.0	
1455	29.90	200	4.49	0.164	21	9.39	18.54	167	0.0	
1500	29.90	200	4.49	0.165	17	9.49	18.50	167	0.0	
1505	29.90	200	4.49	0.166	15	9.40	18.21	167	0.0	
1510	29.90	200	4.49	0.166	14	9.49	18.12	167	0.0	
1515	29.90	200	4.49	0.166	13	9.53	18.06	167	0.0	
1520	29.90	200	4.50	0.166	11	9.42	17.91	167	0.0	
1525	29.90	200	4.51	0.165	10	9.31	17.79	166	0.0	
1530	29.90	200	4.52	0.165	9.3	9.20	17.62	166	0.0	
1535	29.90	200	4.52	0.165	7.9	9.09	17.49	166	0.0	
1540	29.90	200	4.52	0.165	8.9	9.01	17.41	166	0.0	
1545	29.90	200	4.52	0.165	8.3	8.92	17.35	166	0.0	
1550	Samples 05-MW03I and Dup-02 with an assigned time of 1235 were collected. The water was clear with no odor or sheen									

SIGNATURE(S): _____

PAGE___OF___

Tetra Tech NUS, Inc.

GROUNDWATER SAMPLE LOG SHEET

Page___ of ___

Project Site Name: NASJRB Willow Grove
Project No.: 2192

[] Domestic Well Data
[X] Monitoring Well Data
[] Other Well Type:
[] QA Sample Type:

Sample ID No.: 05-MW04-S
Sample Location: MW04-S
Sampled By:
C.O.C. No.:
Type of Sample:
[X] Low Concentration
[] High Concentration

SAMPLING DATA:

	Color Visual	pH Standard	S.C. mS/cm	Temp. °C	Turbidity NTU	DO mg/l	ORP mV	TBD
Date: 8/16/05								
Time: 1225								
Method: Redi flo-2 Pump	Clear	4.17	0.112	16.64	5.9	3.32	246	

PURGE DATA:

	Volume	pH	S.C.	Temp. (C)	Turbidity	DO	ORP	TBD
Date: 8/16/05								
Method: Redi flo-2 Pump								
Monitor Reading (ppm): 10.5								
Well Casing Diameter & Material Type: 4" PVC		(See	Low	Flow	Purge	Data	Sheet)	
Total Well Depth (TD): 51.80								
Static Water Level (WL): 25.79								
One Casing Volume(gal/L):								
Start Purge (hrs): 1120								
End Purge (hrs): 1220								
Total Purge Time (min): 60								
Total Vol. Purged (gal/L): 7.0								

SAMPLE COLLECTION INFORMATION:

Analysis	Preservative	Container Requirements	Collected
TCL VOC	HCL	40 ml VOA Vials	
1,4-Dioxane	4 C	1 Liter Amber Glass	

OBSERVATIONS / NOTES:

Circle if Applicable:

MS/MSD	Duplicate ID No.:

Signature(s):

TBD: To Be Determined

LOW FLOW PURGE DATA SHEET

PROJECT SITE NAME: NASJRB - Willow Grove
PROJECT NUMBER: 2192

WELL ID.: OS-MW04-S
DATE: 8/16/05

Time (Hrs.)	Water Level (Ft. below TOC)	Flow (mL/Min.)	pH (S.U.)	S. Cond. (mS/cm)	Turb. (NTU)	DO (mg/L)	Temp. (Celcius)	ORP mV	Salinity % or ppt	Comments
1120	25.79	500	4.25	0.125	14	8.97	14.96	234	0.0	
1125	25.90	500	4.23	0.125	10	7.78	14.74	240	0.0	
1130	25.85	500	4.22	0.112	8.0	5.68	16.24	238	0.0	
1135	25.85	500	4.22	0.112	8.2	5.39	16.24	240	0.0	
1140	25.85	500	4.22	0.112	8.8	5.19	16.22	242	0.0	
1145	25.85	500	4.21	0.112	7.3	4.72	16.26	242	0.0	
1150	25.85	500	4.22	0.112	6.9	4.37	16.24	245	0.0	
1155	25.85	500	4.19	0.112	6.2	3.46	16.34	245	0.0	
1200	25.85	500	4.18	0.112	6.0	3.32	16.46	245	0.0	
1205	25.85	500	4.18	0.112	6.9	3.43	16.47	246	0.0	
1210	25.85	500	4.17	0.112	6.5	3.49	16.59	247	0.0	
1215	25.85	500	4.17	0.112	6.3	3.32	16.63	247	0.0	
1220	25.85	500	4.17	0.112	5.9	3.32	16.64	246	0.0	

SIGNATURE(S): _____

PAGE___OF___

Tetra Tech NUS, Inc.

GROUNDWATER SAMPLE LOG SHEET

Project Site Name: NASJRB Willow Grove
Project No.: 2192

[] Domestic Well Data
[X] Monitoring Well Data
[] Other Well Type:
[] QA Sample Type:

Sample ID No.: 05MW04T
Sample Location: Site 5
Sampled By: N. Nevic
C.O.C. No.:
Type of Sample:
[X] Low Concentration
[] High Concentration

SAMPLING DATA:

	Color Visual	pH Standard	S.C. mS/cm	Temp. °C	Turbidity NTU	DO mg/l	ORP mV	TBD
Date: 8-16-05								
Time: 1305								
Method: Grundfos Rediflo	Clear	6.14	0.160	16.81	55	4.11	220	

PURGE DATA:

	Volume	pH	S.C.	Temp. (C)	Turbidity	DO	ORP	TBD
Date:								
Method:								
Monitor Reading (ppm): 75.0								
Well Casing Diameter & Material Type: 2" PVC	See Low Flow Purge Data Sheet							
Total Well Depth (TD): 85.5								
Static Water Level (WL): 27.38								
One ~~Casing~~ Screen Volume(gal/L): 6.2								
Start Purge (hrs): 1115								
End Purge (hrs): 1305								
Total Purge Time (min): 110								
Total Vol. Purged (gal/L): 27.5								

SAMPLE COLLECTION INFORMATION:

Analysis	Preservative	Container Requirements	Collected
TCL VOC	HCL	40 ml VOA Vials	3
1,4-Dioxane	4 C	1 Liter Amber Glass	1

OBSERVATIONS / NOTES:

Circle if Applicable:

MS/MSD	Duplicate ID No.:

Signature(s): [illegible]

TBD: To Be Determined

LOW FLOW PURGE DATA SHEET

PROJECT SITE NAME: NAS JRB Willow Grove
PROJECT NUMBER: 2192

WELL ID.: 05MW04I
DATE: 8-16-05

Time (Hrs.)	Water Level (Ft. below TOC)	Flow (mL/Min.)	pH (S.U.)	S. Cond. (mS/cm)	Turb. (NTU)	DO (mg/L)	Temp. (Celcius)	ORP mV	Salinity % or ppt	Comments
1115	27.38	550	5.92	0.176	670	6.52	14.71	213	0.01	
1120	27.38	250	6.05	0.167	520	4.91	14.97	220	0.01	
1125	27.38	250	6.08	0.166	510	4.84	15.28	225	0.01	
1130	27.38	250	6.10	0.165	490	4.71	16.51	229	0.01	
1135	27.38	250	6.10	0.165	480	4.76	16.50	230	0.01	
1140	27.38	250	6.10	0.165	470	4.62	16.45	232	0.01	
1145	27.38	250	6.11	0.165	450	4.42	16.42	233	0.01	
1150	27.38	250	6.11	0.164	430	4.38	16.45	235	0.01	
1155	27.38	250	6.11	0.163	400	4.31	16.38	236	0.01	
1200	27.38	250	6.12	0.163	470	4.25	16.30	236	0.01	L. Mottle 200
1205	27.38	250	6.12	0.162	380	4.25	16.33	235	0.01	
1210	27.38	250	6.12	0.162	320	4.25	16.45	234	0.01	
1215	27.38	250	6.12	0.161	260	4.26	16.63	233	0.01	
1220	27.38	250	6.12	0.161	210/120	4.21	16.62	232	0.01	L. Mottle
1225	27.38	250	6.12	0.161	200	4.19	16.60	231	0.01	
1230	27.38	250	6.12	0.161	190	4.17	16.64	230	0.01	
1235	27.38	250	6.14	0.161	180	4.17	16.72	229	0.01	
1240	27.38	250	6.14	0.161	160	4.16	16.84	227	0.01	
1245	27.38	250	6.13	0.160	150	4.12	16.79	226	0.01	
1250	27.38	250	6.14	0.160	130/65	4.09	16.75	225	0.01	
1255	27.38	250	6.14	0.160	120/65	4.10	16.77	223	0.01	
1300	27.38	250	6.14	0.160	120/55	4.11	16.78	221	0.01	
1305	27.38	250	6.14	0.160	120/55	4.11	16.81	220	0.01	collect sample

SIGNATURE(S): Neb Devlin

LOW FLOW PURGE DATA SHEET

PROJECT SITE NAME: NASJRB Willow Grove
PROJECT NUMBER: 2192

WELL ID.: 05-MW05-S
DATE: 8/10/05

4" PVC

x 42.21
S 40.43

Time (Hrs.)	Water Level (Ft. below TOC)	Flow (mL/Min.)	pH (S.U.)	S. Cond. (mS/cm)	Turb. (NTU)	DO (mg/L)	Temp. (Celcius)	ORP mV	Salinity % or ppt	Comments
1350	21.58	500	5.41	0.115	11.4		13.90	207	0.0	
1355	22.13	500	5.33	0.116	10.3		14.89	206	0.0	
1400	22.75	500	5.24	0.117	8.1		15.27	205	0.0	
1405	22.80	500	5.06	0.119	8.9		15.00	210	0.0	
1410	22.80	500	5.00	0.119	9.2		15.10	212	0.0	
1415	22.80	500	4.93	0.120	10		15.14	213	0.0	
1420	22.80	500	4.90	0.120	11		15.18	214	0.0	
1425	22.80	400	4.85	0.117	11		15.07	215	0.0	
1430	22.80	400	4.80	0.117	10		14.83	219	0.0	
1435	22.80	400	4.77	0.116	9.1		14.39	221	0.0	
1440	22.81	400	4.75	0.117	9.5		14.56	221	0.0	
1445	22.82	400	4.74	0.118	9.6		14.74	221	0.0	
1450	22.82	400	4.73	0.120	8.4		14.73	221	0.0	
1455	22.82	400	4.70	0.122	7.1		14.71	221	0.0	
1500	22.82	400	4.69	0.122	6.9		14.67	221	0.0	
1505	22.82	400	4.67	0.123	7.4		14.64	222	0.0	
1510	22.82	400	4.67	0.124	8.1		14.96	222	0.0	
1515	22.82	400	4.67	0.124	8.7		14.89	222	0.0	
1520	sample 05-MW05-S was collected after purging 13 gallons from the well. The water was clear with no odor or sheen present.									

SIGNATURE(S): _____

PAGE___OF___

LOW FLOW PURGE DATA SHEET

PROJECT SITE NAME: NASJRB - Willow Grove
PROJECT NUMBER: 2192
WELL ID.: 05-MW05-I
DATE: 8/10/05

Time (Hrs.)	Water Level (Ft. below TOC)	Flow (mL/Min.)	pH (S.U.)	S. Cond. (mS/cm)	Turb. (NTU)	DO (mg/L)	Temp. (Celcius)	ORP mV	Salinity % or ppt	Comments
211.1 210.6 1035	36.24	200	5.31	0.535	6.4		14.72	189	0.0	
1040	36.97	200	5.53	0.530	40.7		14.31	173	0.0	
1045	37.51	200	5.66	0.526	650		14.10	162	0.0	
1050	37.97	200	5.77	0.525	600		14.03	154	0.0	
1055	37.95	200	5.86	0.522	500		13.84	145	0.0	
1100	37.94	200	5.90	0.517	410		13.87	140	0.0	
1105	37.53	200	5.92	0.513	340		13.90	138	0.0	
1110	37.53	200	5.96	0.501	276		13.52	134	0.0	
1115	37.54	200	6.00	0.485	193		13.01	130	0.0	
1120	37.55	200	6.03	0.472	124		12.75	127	0.0	
1125	37.56	200	6.06	0.460	75		12.44	124	0.0	
1130	37.53	200	6.09	0.437	52		12.75	120	0.0	
1135	37.54	200	6.11	0.429	39		12.77	118	0.0	
1140	37.57	200	6.14	0.403	36		12.75	114	0.0	
1145	37.56	200	6.15	0.396	29		12.66	112	0.0	
1150	37.56	200	6.18	0.385	30		12.63	109	0.0	
1155	37.56	200	6.18	0.383	30		12.71	108	0.0	
1200	37.56	200	6.20	0.378	30		12.75	106	0.0	
1205	37.56	200	6.22	0.378	29		12.71	104	0.0	
1210	37.57	200	6.24	0.375	30		12.76	102	0.0	
1215	37.56	200	6.24	0.372	30		12.83	100	0.0	
1220	37.57	200	6.25	0.369	30		12.82	98	0.0	
1225	37.57	200	6.25	0.368	30		12.64	96	0.0	
1230	37.57	200	6.25	0.369	29		12.76	95	0.0	
1235	37.57	200	6.25	0.367	30		12.83	97	0.0	
1240	Sample 05-MW05-I was collected after purging 11 gallons from the well. The water was tinted light brown but clear with no odor or sheen noted after purging 11 gallons from the well									

SIGNATURE(S): _____

PAGE___OF___

Tetra Tech NUS, Inc.

GROUNDWATER SAMPLE LOG SHEET

Project Site Name: NASJRB Willow Grove
Project No.: 2192

[] Domestic Well Data
[X] Monitoring Well Data
[] Other Well Type:
[] QA Sample Type:

Sample ID No.: 05MW06S
Sample Location: Site 5
Sampled By: P. Redler
C.O.C. No.:
Type of Sample:
[X] Low Concentration
[] High Concentration

SAMPLING DATA:

	Color Visual	pH Standard	S.C. mS/cm	Temp. °C	Turbidity NTU	DO mg/l	ORP mV	TBD
Date: 8-12-05								
Time: 1050								
Method: Grundfos Rediflo	clear	5.32	0.141	15.07	10	2.54	273	

PURGE DATA:

	Volume	pH	S.C.	Temp. (C)	Turbidity	DO	ORP	TBD
Date:								
Method:								
Monitor Reading (ppm): 0.0								
Well Casing Diameter & Material Type: 4", PVC				NA				
Total Well Depth (TD): 38	See							
Static Water Level (WL): 23.59	Low	Flow		Purge				
One ~~Casing~~ Screen Volume(~~gal~~/L): 50								
Start Purge (hrs): 0855	Data	Sheet						
End Purge (hrs): 1050								
Total Purge Time (min): 115								
Total Vol. Purged (~~gal~~/L): 56.7								

SAMPLE COLLECTION INFORMATION:

Analysis	Preservative	Container Requirements	Collected
TCL VOC	HCL	40 ml VOA Vials	3
1,4-Dioxane	4 C	1 Liter Amber Glass	1

OBSERVATIONS / NOTES:

Circle if Applicable:

MS/MSD	Duplicate ID No.:

Signature(s): Neil Redler

TBD: To Be Determined

LOW FLOW PURGE DATA SHEET

PROJECT SITE NAME: NAS JRB Willow Grove / Site 5
PROJECT NUMBER: 2192

WELL ID.: 05MW06S
DATE: 8-12-05

Time (Hrs.)	Water Level (Ft. below TOC)	Flow (mL/Min.)	pH (S.U.)	S. Cond. (mS/cm)	Turb. (NTU)	DO (mg/L)	Temp. (Celcius)	ORP mV	Salinity % or ppt	Comments
0855	23.59	1000	5.41	0.147	92	5.52	14.30	245	0.01	
0900	23.61	250	5.29	0.147	30	3.55	15.86	250	0.01	
0905	23.61	250	5.31	0.147	24	3.43	15.91	245	0.01	
0910	23.61	250	5.32	0.147	22	3.37	16.23	238	0.01	
0915	23.61	250	5.34	0.147	18	3.31	16.54	227	0.01	
0920	23.61	250	5.33	0.147	19	3.14	16.82	228	0.01	
0925	23.61	250	5.33	0.147	16	2.98	16.93	229	0.01	
0930	23.61	250	5.35	0.147	16	2.97	16.91	229	0.01	
0935	23.61	250	5.35	0.147	14	2.92	16.89	229	0.01	
0940	23.61	250	5.35	0.147	14	2.90	16.95	231	0.01	
0945	23.61	250	5.35	0.147	11	2.88	17.03	232	0.01	
0950	23.61	250	5.35	0.146	12	2.83	17.08	233	0.01	
0955	23.61	250	5.33	0.146	13	2.77	16.94	245	0.01	
1000	23.61	750	5.30	0.145	12	2.72	15.70	258	0.01	
1005	23.63	750	5.30	0.145	12	2.70	15.58	260	0.01	
1010	23.63	750	5.30	0.145	12	2.64	15.55	262	0.01	
1015	23.63	750	5.30	0.143	12	2.61	15.21	263	0.01	
1020	23.63	750	5.31	0.142	12	2.58	15.09	265	0.01	
1025	23.63	750	5.31	0.142	12	2.56	15.12	266	0.01	
1030	23.63	750	5.31	0.142	11	2.53	15.15	268	0.01	
1035	23.63	750	5.31	0.141	11	2.53	15.19	270	0.01	
1040	23.63	750	5.31	0.141	11	2.53	15.24	271	0.01	
1045	23.63	750	5.32	0.141	11	2.53	15.21	272	0.01	
1050	23.63	750	5.32	0.141	10	2.54	15.07	273	0.01	Collected Sample

SIGNATURE(S): [illegible]

Tetra Tech NUS, Inc.

GROUNDWATER SAMPLE LOG SHEET

Page___ of ___

Project Site Name: NASJRB Willow Grove
Project No.: 2192

[] Domestic Well Data
[X] Monitoring Well Data
[] Other Well Type:
[] QA Sample Type:

Sample ID No.: 05-MW06-I
Sample Location: MW06-I
Sampled By: CLM
C.O.C. No.:
Type of Sample:
[X] Low Concentration
[] High Concentration

SAMPLING DATA:

	Color Visual	pH Standard	S.C. mS/cm	Temp. °C	Turbidity NTU	DO mg/l	ORP mV	TBD
Date: 8/12/05								
Time: 1045								
Method: Rediflo-2 Pump	Clear	6.32	0.352	16.40	4.2	5.20	100	

PURGE DATA:

	Volume	pH	S.C.	Temp. (C)	Turbidity	DO	ORP	TBD
Date: 8/12/05								
Method: Rediflo-2 Pump								
Monitor Reading (ppm): 4.5								
Well Casing Diameter & Material Type: 4" PVC		(See Low Flow Purge Data Sheets)						
Total Well Depth (TD): 85'								
Static Water Level (WL): 23.20								
One Casing Volume(gal/L):								
Start Purge (hrs): 0850								
End Purge (hrs): 1040								
Total Purge Time (min): 110								
Total Vol. Purged (gal): 11								

SAMPLE COLLECTION INFORMATION:

Analysis	Preservative	Container Requirements	Collected
TCL VOC	HCL	40 ml VOA Vials	3
1,4-Dioxane	4 C	1 Liter Amber Glass	1

OBSERVATIONS / NOTES:

Circle if Applicable:

MS/MSD	Duplicate ID No.:

Signature(s):

TBD: To Be Determined

LOW FLOW PURGE DATA SHEET

PROJECT SITE NAME: NASJRB Willow Grove
PROJECT NUMBER: 2192

WELL ID.: 05MW06I
DATE: 8/12/05

Time (Hrs.)	Water Level (Ft. below TOC)	Flow (mL/Min.)	pH (S.U.)	S. Cond. (mS/cm)	Turb. (NTU)	DO (mg/L)	Temp. (Celcius)	ORP mV	Salinity % or ppt	Comments
0850	23.20	500	5.97	0.417	11	6.98	17.31	192	0.0	
0855	24.09	500	5.42	0.382	7.6	6.21	15.94	173	0.0	
0900	24.63	500	5.08	0.367	2.1	6.09	14.98	154	0.0	
0905	24.89	500	5.35	0.367	0.55	5.00	15.11	144	0.0	
0910	25.04	500	5.61	0.365	3.51	4.57	15.77	135	0.0	
0915	25.15	250	5.69	0.365	4.17	4.71	15.66	133	0.0	
0920	25.31	250	5.80	0.363	5.31	4.75	16.15	130	0.0	
0925	25.50	250	5.83	0.358	5.3	4.92	15.10	126	0.0	
0930	25.71	250	5.89	0.360	4.9	5.02	15.26	119	0.0	
0935	25.80	250	6.01	0.359	4.7	4.99	15.81	116	0.0	
0940	25.85	250	6.08	0.357	4.6	4.95	15.93	114	0.0	
0945	25.83	250	6.12	0.359	4.9	5.04	15.91	113	0.0	
0950	25.80	250	6.15	0.358	4.9	5.10	16.12	112	0.0	
0955	25.79	250	6.17	0.357	5.3	5.12	16.32	110	0.0	
1000	25.78	250	6.21	0.357	5.8	5.16	15.99	108	0.0	
1005	25.78	250	6.23	0.356	6.6	5.32	16.55	107	0.0	
1010	25.78	250	6.29	0.350	6.2	5.30	16.38	102	0.0	
1015	25.78	250	6.27	0.350	5.9	5.32	16.15	102	0.0	
1020	25.78	250	6.29	0.352	5.3	5.30	16.37	101	0.0	
1025	25.78	250	6.31	0.352	4.9	5.23	16.42	100	0.0	
1030	25.78	250	6.33	0.352	4.5	5.19	16.45	101	0.0	
1035	25.78	250	6.33	0.352	4.2	5.17	16.45	100	0.0	
1040	25.78		6.32	0.352		5.20	16.40	100	0.0	

SIGNATURE(S): _____

PAGE___OF___

Tetra Tech NUS, Inc.

GROUNDWATER SAMPLE LOG SHEET

Project Site Name: NASJRB Willow Grove
Project No.: 2192

[] Domestic Well Data
[X] Monitoring Well Data
[] Other Well Type:
[] QA Sample Type:

Sample ID No.: 05MW075
Sample Location: Site 5
Sampled By: N. Dedic
C.O.C. No.:
Type of Sample:
[X] Low Concentration
[] High Concentration

SAMPLING DATA:

	Color Visual	pH Standard	S.C. mS/cm	Temp. °C	Turbidity NTU	DO mg/l	ORP mV	TBD
Date: 8-9-05								
Time: 1115								
Method: Grundfos Redi flo	Clear	4.48	0.284	15.51	0.0	NA	226	

PURGE DATA:

	Volume	pH	S.C.	Temp. (C)	Turbidity	DO	ORP	TBD
Date:								
Method:								
Monitor Reading (ppm): 0.0								
Well Casing Diameter & Material Type:	See Low Flow Purge Data Sheet				NA			
Total Well Depth (TD):								
Static Water Level (WL):								
One ~~Casing~~ Screen Volume(~~gal~~/L): 75/50								
Start Purge (hrs): 0940								
End Purge (hrs): 1115								
Total Purge Time (min): 95								
Total Vol. Purged (~~gal~~/L): 76								

SAMPLE COLLECTION INFORMATION:

Analysis	Preservative	Container Requirements	Collected
TCL VOC	HCL	40 ml VOA Vials	3
1,4-Dioxane	4 C	1 Liter Amber Glass	1

OBSERVATIONS / NOTES:

Circle if Applicable:

MS/MSD	Duplicate ID No.:

Signature(s): Neil Dedic

TBD: To Be Determined

LOW FLOW PURGE DATA SHEET

PROJECT SITE NAME: NAS JRB Willow Grove
PROJECT NUMBER: 2192

WELL ID.: OSMW075
DATE: 8-9-05

Time (Hrs.)	Water Level (Ft. below TOC)	Flow (mL/Min.)	pH (S.U.)	S. Cond. (mS/cm)	Turb. (NTU)	DO (mg/L)	Temp. (Celcius)	ORP mV	Salinity % or ppt	Comments
0940	21.90	800	4.43	0.277	2.9	*	15.92	218	0.0	* DO probe
0945	21.90	800	4.46	0.278	2.5		17.40	214	0.0	malfunction
0950	21.90	800	4.45	0.280	1.4		17.50	213	0.0	
0955	21.90	800	4.43	0.280	1.1		17.12	216	0.0	
1000	21.90	800	4.41	0.281	0.88		16.63	220	0.0	
1005	21.92	800	4.41	0.281	0.75		16.51	221	0.0	
1010	21.92	800	4.41	0.282	0.0		16.39	221	0.0	
1015	21.92	800	4.42	0.282	0.0		16.45	221	0.0	
1020	21.92	800	4.44	0.281	0.0		16.81	220	0.0	
1025	21.92	800	4.44	0.281	0.0		16.40	220	0.0	
1030	21.92	800	4.44	0.281	0.0		16.30	221	0.0	
1035	21.92	800	4.45	0.282	0.0		16.22	222	0.0	
1040	21.92	800	4.45	0.282	0.0		16.58	222	0.0	
1045	21.92	800	4.43	0.283	0.0		16.03	223	0.0	
1050	21.92	800	4.43	0.285	0.0		15.82	223	0.0	
1055	21.92	800	4.43	0.285	0.0		15.67	225	0.0	
1100	21.94	800	4.44	0.285	0.0		15.48	228	0.0	
1105	21.94	800	4.46	0.285	0.0		15.46	228	0.0	
1110	21.94	800	4.48	0.284	0.0		15.47	227	0.0	
1115	21.94	800	4.48	0.284	0.0		15.51	226	0.0	

SIGNATURE(S): _____

PAGE___OF___

LOW FLOW PURGE DATA SHEET

PROJECT SITE NAME: NASJRB - Willow Grove
PROJECT NUMBER: 2992

WELL ID.: 05MW07I
DATE: 8-9-05

Time (Hrs.)	Water Level (Ft. below TOC)	Flow (mL/Min.)	pH (S.U.)	S. Cond. (mS/cm)	Turb. (NTU)	DO (mg/L)	Temp. (Celcius)	ORP mV	Salinity % or ppt	Comments
0940	22.59	200	6.73	0.323	8.0	4.79	18.27	246		
0945	22.69	200	6.77	0.324	6.0	4.34	18.17	208		
0950	22.69	200	6.79	0.323	7.1	4.12	18.10	157		
0955	22.69	200	6.80	0.323	7.0	3.88	17.87	133		
1000	22.69	200	6.80	0.322	6.4	3.70	17.81	127		
1005	22.69	200	6.80	0.322	6.0	3.61	17.83	125		
1010	22.69	200	6.80	0.322	5.6	3.52	17.83	123		
1015	22.69	200	6.80	0.322	5.2	3.46	17.83	120		
1020	22.74	500	6.80	0.322	7.7	3.33	16.48	109		
1025	22.75	500	6.78	0.319	6.6	3.07	16.45	102		
1030	22.75	500	6.77	0.319	7.2	3.02	16.43	108		
1035	22.75	500	6.76	0.319	7.4	2.95	16.42	110		
1040	22.75	500	6.75	0.318	8.40	2.89	16.41	112		
1045	22.75	500	6.75	0.318	7.5	2.87	16.62	113		
1050	22.75	500	6.75	0.318	7.0	2.87	16.54	112		
1055	22.75	500	6.75	0.317	6.6	2.87	16.56	111		
1100	22.75	500	6.75	0.317	6.9	2.88	16.54	112		
1105	22.75	500	6.76	0.316	7.3	2.89	16.67	113		
1110	22.75	500	6.76	0.316	7.5	2.88	16.93	112		
1115	22.75	500	6.77	0.316	7.6	2.87	17.00	113		
1120	22.75	500	6.77	0.316	6.3	2.87	17.10	114		
1125										

Sample 05-MW07-I was collected water clear no odor or sheen present 15 gallons removed

SIGNATURE(S): _____

PAGE___OF___

Tetra Tech NUS, Inc.

GROUNDWATER SAMPLE LOG SHEET

Page___ of ___

Project Site Name: NASJRB Willow Grove
Project No.: 2192

[] Domestic Well Data
[X] Monitoring Well Data
[] Other Well Type:
[] QA Sample Type:

Sample ID No.: 05-MW08-S
Sample Location: MW08-S
Sampled By: CM
C.O.C. No.:
Type of Sample:
[X] Low Concentration
[] High Concentration

SAMPLING DATA:

	Color Visual	pH Standard	S.C. mS/cm	Temp. °C	Turbidity NTU	DO mg/l	ORP mV	TBD
Date: 8/12/05								
Time: 1325								
Method: Redi flo-2 Pump	Clear	5.67	0.240	18.72	6.2	4.48	160	

PURGE DATA:

	Volume	pH	S.C.	Temp. (C)	Turbidity	DO	ORP	TBD
Date: 8/12/05								
Method: Redi flo-2 Pump								
Monitor Reading (ppm): 0.0								
Well Casing Diameter & Material Type: 2" PVC		(See Low Flow Purge Data Sheet)						
Total Well Depth (TD): 38.19								
Static Water Level (WL): 22.53								
One Casing Volume(gal/L):								
Start Purge (hrs): 1205								
End Purge (hrs): 1320								
Total Purge Time (min): 75								
Total Vol. Purged (gal/L): 6								

SAMPLE COLLECTION INFORMATION:

Analysis	Preservative	Container Requirements	Collected
TCL VOC	HCL	40 ml VOA Vials	3
1,4-Dioxane	4 C	1 Liter Amber Glass	1

OBSERVATIONS / NOTES:

Circle if Applicable:

MS/MSD	Duplicate ID No.:

Signature(s):

TBD: To Be Determined

LOW FLOW PURGE DATA SHEET

PROJECT SITE NAME: NAS JRB Willow Grove
PROJECT NUMBER: 2192

WELL ID.: 05-MW08-S
DATE: 8/12/05

Time (Hrs.)	Water Level (Ft. below TOC)	Flow (mL/Min.)	pH (S.U.)	S. Cond. (mS/cm)	Turb. (NTU)	DO (mg/L)	Temp. (Celcius)	ORP mV	Salinity % or ppt	Comments
1205	22.53	200	6.20	0.438	100	11.51	17.60	159	0.0	
1210	22.73	200	6.11	0.410	68	9.30	17.59	159	0.0	
1215	22.75	200	6.04	0.379	36	7.15	17.89	158	0.0	
1220	22.75	200	5.97	0.351	20	6.19	18.27	152	0.0	
1225	22.75	200	5.91	0.320	17	5.64	18.33	152	0.0	
1230	22.75	200	5.88	0.299	13	5.28	18.57	153	0.0	
1235	22.75	200	5.83	0.277	10	5.43	18.81	153	0.0	
1240	22.75	200	5.81	0.266	8.6	5.68	19.01	155	0.0	
1245	22.75	200	5.78	0.256	9.3	5.26	18.98	156	0.0	
1250	22.75	200	5.75	0.248	6.9	5.41	19.19	157	0.0	
1255	22.75	200	5.71	0.247	8.5	4.79	19.09	158	0.0	
1300	22.75	200	5.69	0.245	7.9	4.63	19.09	158	0.0	
1305	22.75	200	5.68	0.244	7.1	4.52	19.09	159	0.0	
1310	22.75	200	5.69	0.243		4.47	19.18	161	0.0	
1315	22.75	200	5.68	0.241		4.58	18.61	159	0.0	
1320	22.75	200	5.67	0.240		4.48	18.72	160	0.0	
1325	sample MW08-S was collected after purging 6 gallons from the well. Water was clear no odor or sheen.									

SIGNATURE(S): _____

PAGE___OF___

LOW FLOW PURGE DATA SHEET

PROJECT SITE NAME: NASJRB Willow Grove
PROJECT NUMBER: 2192

WELL ID.: 05-MW08-S 1,4 Dioxane
DATE: 8/18/05

Time (Hrs.)	Water Level (Ft. below TOC)	Flow (mL/Min.)	pH (S.U.)	S. Cond. (mS/cm)	Turb. (NTU)	DO (mg/L)	Temp. (Celcius)	ORP mV	Salinity % or ppt	Comments
0940	23.00	200	4.68	0.428	76	19.11	15.09	138	0.0	
0945	23.05	200	4.67	0.386	42	17.65	16.82	138	0.0	
0950	23.10	200	4.64	0.351	27	13.57	17.15	138	0.0	
0955	23.15	200	4.62	0.335	16	12.14	17.48	139	0.0	
1000	23.15	200	4.62	0.315	15	10.81	17.60	145	0.0	
1005	23.15	200	4.60	0.288	14	9.72	17.85	150	0.0	
1010	23.15	200	4.60	0.279	13	9.02	17.95	152	0.0	
1015	23.15	200	4.60	0.271	9.6	8.62	18.00	155	0.0	
1020	23.15	200	4.61	0.258	7.7	7.79	18.18	158	0.0	
1025	23.15	200	4.62	0.251	7.3	7.59	18.18	158	0.0	
1030	23.15	200	4.64	0.250	6.2	7.30	18.48	158	0.0	
1035	23.15	200	4.63	0.245	6.6	7.10	18.59	160	0.0	
1040	23.15	200	4.63	0.242	5.0	6.97	18.57	160	0.0	
1045	23.15	200	4.63	0.240	5.3	6.88	18.44	159	0.0	
1050	23.15	200	4.64	0.234	5.0	6.80	18.58	158	0.0	
1055	23.15	200	4.65	0.237	6.1	6.60	18.65	160	0.0	
1100	23.15	200	4.66	0.236	6.2	5.99	18.78	158	0.0	
1105	23.15	200	4.66	0.238	5.8	5.89	18.65	159	0.0	
1110	23.15	200	4.67	0.237	5.0	5.76	18.77	159	0.0	
1115	Sample 05-MW08-S for 1,4-Dioxane was collected									

SIGNATURE(S): _____

PAGE___OF___

Tetra Tech NUS, Inc.

GROUNDWATER SAMPLE LOG SHEET

Project Site Name: NASJRB Willow Grove
Project No.: 2192

[] Domestic Well Data
[X] Monitoring Well Data
[] Other Well Type:
[] QA Sample Type:

Sample ID No.: 05MW085I
Sample Location: Site 5
Sampled By: N. Redlich
C.O.C. No.:
Type of Sample:
[X] Low Concentration
[] High Concentration

SAMPLING DATA:

	Color Visual	pH Standard	S.C. mS/cm	Temp. °C	Turbidity NTU	DO mg/l	ORP mV	TBD
Date: 8-12-05								
Time: 1315								
Method: Grundfos Redi-flo	Clear	6.16	0.278	17.62	18	0.38	147	

PURGE DATA:

	Volume	pH	S.C.	Temp. (C)	Turbidity	DO	ORP	TBD
Date:								
Method:								
Monitor Reading (ppm): 0.0								
Well Casing Diameter & Material Type: 2", PVC					ND			
Total Well Depth (TD):	See Low Flow Purge Data Sheet							
Static Water Level (WL): 22.91								
One ~~Casing~~ Screen Volume(~~gal~~/L): 6.2								
Start Purge (hrs): 1205								
End Purge (hrs): 1315								
Total Purge Time (min): 70								
Total Vol. Purged (~~gal~~/L): 19.6								

SAMPLE COLLECTION INFORMATION:

Analysis	Preservative	Container Requirements	Collected
TCL VOC	HCL	40 ml VOA Vials	6
1,4-Dioxane	4 C	1 Liter Amber Glass	2

OBSERVATIONS / NOTES:

Circle if Applicable:
MS/MSD
Duplicate ID No.: DUP-01

Signature(s): Neil Redlich

TBD: To Be Determined

LOW FLOW PURGE DATA SHEET

PROJECT SITE NAME: NAS JRB Willow Grove/Site 5
PROJECT NUMBER: 2192
WELL ID.: 05MW085I
DATE: 8-12-05

Time (Hrs.)	Water Level (Ft. below TOC)	Flow (mL/Min.)	pH (S.U.)	S. Cond. (mS/cm)	Turb. (NTU)	DO (mg/L)	Temp. (Celcius)	ORP mV	Salinity % or ppt	Comments
1205	22.91	350	6.07	0.265	460	2.41	17.70	188	0.01	
1210	22.95	300	6.04	0.270	270	2.21	17.87	138	0.01	
1215	22.97	300	6.08	0.277	210	1.94	18.02	121	0.01	
1220	22.97	300	6.09	0.279	190	1.60	18.08	117	0.01	
1225	22.97	300	6.09	0.280	160	1.55	18.15	119	0.01	
1230	22.97	300	6.11	0.281	110	1.48	18.37	121	0.01	
1235	22.97	300	6.11	0.280	85	1.42	18.10	125	0.01	
1240	22.97	300	6.11	0.279	66	1.36	17.81	128	0.01	
1245	22.97	300	6.11	0.278	42	1.30	17.62	133	0.01	
1250	22.97	300	6.11	0.278	35	1.28	17.61	138	0.01	
1255	22.97	300	6.12	0.278	28	1.22	17.55	141	0.01	
1300	22.97	300	6.13	0.279	23	1.11	17.53	143	0.01	
1305	22.97	300	6.13	0.279	20	1.09	17.41	145	0.01	
1310	22.97	300	6.14	0.278	19	1.03	17.56	146	0.01	
1315	22.97	300	6.16	0.278	18	0.98	17.62	147	0.01	Collected sample

SIGNATURE(S): [illegible]

Tetra Tech NUS, Inc.

GROUNDWATER SAMPLE LOG SHEET

Project Site Name: NASJRB Willow Grove
Project No.: 2192

[] Domestic Well Data
[X] Monitoring Well Data
[] Other Well Type:
[] QA Sample Type:

Sample ID No.: 05MW081
Sample Location: Site 5
Sampled By: D. Nedic
C.O.C. No.:
Type of Sample:
[X] Low Concentration
[] High Concentration

SAMPLING DATA:

	Color Visual	pH Standard	S.C. mS/cm	Temp. °C	Turbidity NTU	DO mg/l	ORP mV	TBD
Date: 8-18-05								
Time: 1040								
Method: Grundfos Redi flo	clear	7.07	0.267	15.67	6	3.82	24	

PURGE DATA:

	Volume	pH	S.C.	Temp. (C)	Turbidity	DO	ORP	TBD
Date:								
Method:								
Monitor Reading (ppm): 14.1								
Well Casing Diameter & Material Type: 2" PVC		See	Low	Flow				
Total Well Depth (TD): 101		Purge	Data		Sheet			
Static Water Level (WL): 23.44								
One ~~Casing~~ Screen Volume(~~gal~~/L): 6.2								
Start Purge (hrs): 0925								
End Purge (hrs): 1040								
Total Purge Time (min): 75								
Total Vol. Purged (gal/L): 25.8								

SAMPLE COLLECTION INFORMATION:

Analysis	Preservative	Container Requirements	Collected
TCL VOC	HCL	40 ml VOA Vials	3
1,4-Dioxane	4 C	1 Liter Amber Glass	1

OBSERVATIONS / NOTES:

Circle if Applicable:

MS/MSD	Duplicate ID No.:
	#

Signature(s): [illegible]

TBD: To Be Determined

LOW FLOW PURGE DATA SHEET

PROJECT SITE NAME: NAS JRB Willow Grove
PROJECT NUMBER: 2192

WELL ID.: 05MW08T
DATE: 8-18-05

Time (Hrs.)	Water Level (Ft. below TOC)	Flow (mL/Min.)	pH (S.U.)	S. Cond. (mS/cm)	Turb. (NTU)	DO (mg/L)	Temp. (Celcius)	ORP mV	Salinity % or ppt	Comments
0925	23.44	500	6.49	0.287	36	5.22	14.08	187	0.01	
0930	23.48	400	6.89	0.273	34	4.07	14.82	98	0.01	
0940	23.48	350	6.93	0.272	28	4.05	14.81	85	0.01	
0945	23.46	350	6.99	0.271	20	4.02	14.89	81	0.01	
0950	23.46	350	7.02	0.270	18	3.93	15.07	72	0.01	
0955	23.46	350	7.02	0.270	24	3.92	15.11	70	0.01	
1000	23.46	350	7.02	0.270	21	3.92	15.13	70	0.01	
1005	23.46	350	7.04	0.270	19	3.90	15.33	72	0.01	
1010	23.46	300	7.04	0.270	15	3.88	15.47	72	0.01	
1015	23.46	300	7.05	0.269	11	3.88	15.53	72	0.01	
1020	23.46	300	7.06	0.269	7	3.87	15.56	73	0.01	
1025	23.46	300	7.06	0.268	6	3.81	15.36	74	0.01	
1030	23.46	300	7.07	0.268	7	3.82	15.58	74	0.01	
1035	23.46	300	7.07	0.268	5	3.82	15.65	74	0.01	
1040	23.46	300	7.07	0.267	6	3.82	15.67	74	0.01	

SIGNATURE(S): Neil Rehder

Tetra Tech NUS, Inc.

GROUNDWATER SAMPLE LOG SHEET

Page___ of ___

Project Site Name: NASJRB Willow Grove
Project No.: 2192

[] Domestic Well Data
[X] Monitoring Well Data
[] Other Well Type:
[] QA Sample Type:

Sample ID No.: 05-MW09-S
Sample Location: 05-MW09-S
Sampled By:
C.O.C. No.:
Type of Sample:
[X] Low Concentration
[] High Concentration

SAMPLING DATA:

	Color Visual	pH Standard	S.C. mS/cm	Temp. °C	Turbidity NTU	DO mg/l	ORP mV	TBD
Date: 8/17/05								
Time: 1610								
Method: Rediflo-2 Pump	Clear	4.19	0.161	17.93	5.4	5.73	194	

PURGE DATA:

	Volume	pH	S.C.	Temp. (C)	Turbidity	DO	ORP	TBD
Date: 8/17/05								
Method: Rediflo-2 Pump								
Monitor Reading (ppm): 0.0								
Well Casing Diameter & Material Type: 2" PVC	(See Low Flow Purge Data Sheet)							
Total Well Depth (TD): 33.70								
Static Water Level (WL): 23.73								
One Casing Volume(gal/L):								
Start Purge (hrs): 1445								
End Purge (hrs): 1605								
Total Purge Time (min): 80								
Total Vol. Purged (gal/L): 6								

SAMPLE COLLECTION INFORMATION:

Analysis	Preservative	Container Requirements	Collected
TCL VOC	HCL	40 ml VOA Vials	3
1,4-Dioxane	4 C	1 Liter Amber Glass	1

OBSERVATIONS / NOTES:

Circle if Applicable:

MS/MSD	Duplicate ID No.:

Signature(s):

TBD: To Be Determined

LOW FLOW PURGE DATA SHEET

PROJECT SITE NAME: NASJRB Willow Grove
PROJECT NUMBER: 2192

WELL ID.: 05-MW09-S
DATE: 8/17/05

Time (Hrs.)	Water Level (Ft. below TOC)	Flow (mL/Min.)	pH (S.U.)	S. Cond. (mS/cm)	Turb. (NTU)	DO (mg/L)	Temp. (Celcius)	ORP mV	Salinity % or ppt	Comments
1445	23.73	200	4.04	0.174	45	19.57	16.60	180	0.0	
1450	23.80	200	4.19	0.172	21	18.01	17.00	182	0.0	
1455	23.90	200	4.27	0.172	15	16.59	17.39	184	0.0	
1500	23.95	200	4.33	0.171	12	15.24	17.65	185	0.0	
1505	23.95	200	4.28	0.169	10	9.58	17.21	189	0.0	
1510	23.95	200	4.22	0.168	8.9	8.52	17.72	190	0.0	
1515	23.95	200	4.20	0.167	7.5	7.97	17.96	190	0.0	
1520	23.95	200	4.22	0.166	8.0	7.49	17.92	189	0.0	
1525	23.95	200	4.21	0.166	8.0	7.43	17.93	190	0.0	
1530	23.95	200	4.20	0.165	6.3	6.91	17.86	192	0.0	
1535	23.95	200	4.18	0.164	6.7	6.57	18.13	194	0.0	
1540	23.95	200	4.18	0.163	6.9	6.49	18.01	195	0.0	
1545	23.95	200	4.17	0.163	6.3	6.40	17.92	195	0.0	
1550	23.95	200	4.18	0.162	6.2	6.00	17.82	194	0.0	
1555	23.95	200	4.19	0.162	6.2	5.90	17.73	193	0.0	
1600	23.95	200	4.19	0.161	5.5	5.85	17.79	194	0.0	
1605	23.95	200	4.19	0.161	5.4	5.73	17.93	194	0.0	
1610	Sample 05-MW09-S was collected after removing 6 gallons from the well the water was clear with no odor or sheen									

SIGNATURE(S): _____

PAGE___OF___

Tetra Tech NUS, Inc.

GROUNDWATER SAMPLE LOG SHEET

Page___ of ___

Project Site Name: NASJRB Willow Grove
Project No.: 2192

[] Domestic Well Data
[X] Monitoring Well Data
[] Other Well Type:
[] QA Sample Type:

Sample ID No.: 05-MW09-SI
Sample Location: MW09-SI
Sampled By:
C.O.C. No.:
Type of Sample:
[X] Low Concentration
[] High Concentration

SAMPLING DATA:

	Color Visual	pH Standard	S.C. mS/cm	Temp. °C	Turbidity NTU	DO mg/l	ORP mV	TBD
Date: 8/17/09								
Time: 1330								
Method: Redi-flo-2 pump	clear	4.70	0.265	16.70	3.9	5.42	126	

PURGE DATA:

	Volume	pH	S.C.	Temp. (C)	Turbidity	DO	ORP	TBD
Date: 8/17/09								
Method: Redi-flo-2 Pump								
Monitor Reading (ppm): 0.0								
Well Casing Diameter & Material Type: 2" PVC	(See Low Flow Purge Data sheet)							
Total Well Depth (TD):								
Static Water Level (WL): 24.04								
One Casing Volume(gal/L):								
Start Purge (hrs): 1215								
End Purge (hrs): 1325								
Total Purge Time (min):								
Total Vol. Purged (gal/L): 5.0								

SAMPLE COLLECTION INFORMATION:

Analysis	Preservative	Container Requirements	Collected
TCL VOC	HCL	40 ml VOA Vials	4
1,4-Dioxane	4 C	1 Liter Amber Glass	3

OBSERVATIONS / NOTES:

MS/MSD was collected at this Location

Circle if Applicable:

(MS/MSD) Duplicate ID No.:

Signature(s):

TBD: To Be Determined

LOW FLOW PURGE DATA SHEET

PROJECT SITE NAME: NASJRB Willow Grove
PROJECT NUMBER: 2192

WELL ID.: 05-MW09-SE
DATE: 8/17/05

Time (Hrs.)	Water Level (Ft. below TOC)	Flow (mL/Min.)	pH (S.U.)	S. Cond. (mS/cm)	Turb. (NTU)	DO (mg/L)	Temp. (Celcius)	ORP mV	Salinity % or ppt	Comments
1215	24.04	200	4.58	0.534	40		16.38	148	0.0	
1220	24.11	200	4.54	0.313	70	14.34	16.35	145	0.0	
1225	24.11	200	4.55	0.247	43	10.26	16.33	140	0.0	
1230	24.11	200	4.56	0.280	26	9.01	16.31	138	0.0	
1235	24.11	200	4.57	0.278	15	9.34	16.44	137	0.0	
1240	24.11	200	4.58	0.273	9.7	7.49	16.28	136	0.0	
1245	24.11	200	4.58	0.272	8.3	7.03	16.34	136	0.0	
1250	24.11	200	4.58	0.272	7.8	6.70	16.40	136	0.0	
1255	24.11	200	4.60	0.270	6.8	6.30	16.45	134	0.0	
1300	24.11	200	4.62	0.270	6.2	6.00	16.50	130	0.0	
1305	24.11	200	4.65	0.269	5.7	5.79	16.52	127	0.0	
1310	24.11	200	4.68	0.267	5.1	5.62	16.57	126	0.0	
1315	24.11	200	4.69	0.265	4.3	5.51	16.60	125	0.0	
1320	24.11	200	4.69	0.265	4.0	5.44	16.63	125	0.0	
1325	24.11	200	4.70	0.265	3.9	5.42	16.70	126	0.0	
1330	Sample 05-MW09-SE MS/MSD was collected. The water was clear with no odor or sheen present.									

SIGNATURE(S): _____

PAGE___OF___

Tetra Tech NUS, Inc.

GROUNDWATER SAMPLE LOG SHEET

Project Site Name: NASJRB Willow Grove
Project No.: 2192

[] Domestic Well Data
[X] Monitoring Well Data
[] Other Well Type:
[] QA Sample Type:

Sample ID No.: 05MW09I
Sample Location: Site 5
Sampled By: N. Radic
C.O.C. No.:
Type of Sample:
[X] Low Concentration
[] High Concentration

SAMPLING DATA:

	Color Visual	pH Standard	S.C. mS/cm	Temp. °C	Turbidity NTU	DO mg/l	ORP mV	TBD
Date: 8-17-05								
Time: 1600								
Method: Grundfos Redi-flo	Clear	6.63	0.317	17.05	0	1.73	41	

PURGE DATA:

	Volume	pH	S.C.	Temp. (C)	Turbidity	DO	ORP	TBD
Date:								
Method:								
Monitor Reading (ppm): 3.0								
Well Casing Diameter & Material Type: 2", PVC			See Low Flow					
Total Well Depth (TD): 109			Purge Data			Sheet		
Static Water Level (WL): 24.59								
One ~~Casing~~ Screen Volume(~~gal~~/L): 6.2								
Start Purge (hrs): 1445								
End Purge (hrs): 1600								
Total Purge Time (min): 75								
Total Vol. Purged (~~gal~~/L): 22.8								

SAMPLE COLLECTION INFORMATION:

Analysis	Preservative	Container Requirements	Collected
TCL VOC	HCL	40 ml VOA Vials	3
1,4-Dioxane	4 C	1 Liter Amber Glass	1

OBSERVATIONS / NOTES:

Circle if Applicable:

MS/MSD	Duplicate ID No.:

Signature(s): Neb Radic

TBD: To Be Determined

LOW FLOW PURGE DATA SHEET

PROJECT SITE NAME: NAS JRB Willow Grove
PROJECT NUMBER: 2192

WELL ID.: OSMW09T
DATE: 8-17-05

Time (Hrs.)	Water Level (Ft. below TOC)	Flow (mL/Min.)	pH (S.U.)	S. Cond. (mS/cm)	Turb. (NTU)	DO (mg/L)	Temp. (Celcius)	ORP mV	Salinity % or ppt	Comments
1445	24.59	350	7.44	0.350	150	5.30	16.16	74	0.01	
1450	24.60	350	6.58	0.340	78	1.39	16.81	19	0.01	
1455	24.62	350	6.50	0.343	40	1.08	17.34	15	0.01	
1500	24.62	300	6.52	0.338	38	1.11	17.41	18	0.01	
1505	24.62	300	6.53	0.335	34	1.14	17.52	23	0.01	
1510	24.62	300	6.54	0.331	36	1.18	17.89	24	0.01	
1515	24.62	300	6.55	0.329	35	1.29	18.68	25	0.01	
1520	24.61	280	6.58	0.329	35	1.37	18.84	28	0.01	
1525	24.61	280	6.59	0.328	33	1.46	18.91	31	0.01	
1530	24.61	280	6.60	0.325	22	1.50	18.15	32	0.01	
1535	24.61	280	6.60	0.321	16	1.54	17.78	32	0.01	
1540	24.61	300	6.61	0.320	18	1.57	17.56	34	0.01	
1545	24.62	300	6.61	0.318	16	1.58	17.10	36	0.01	
1550	24.62	300	6.62	0.320	14	1.70	17.59	38	0.01	
1555	24.62	300	6.62	0.317	0	1.75	17.57	39	0.01	
1600	24.62	300	6.63	0.317	0	1.73	17.05	41	0.01	

SIGNATURE(S): NEB Neblit

Tetra Tech NUS, Inc.

GROUNDWATER SAMPLE LOG SHEET

Project Site Name: NASJRB Willow Grove
Project No.: 2192

[] Domestic Well Data
[X] Monitoring Well Data
[] Other Well Type:
[] QA Sample Type:

Sample ID No.: 05MW10S
Sample Location: Site 5
Sampled By: N. Redic
C.O.C. No.:
Type of Sample:
[X] Low Concentration
[] High Concentration

SAMPLING DATA:

	Color Visual	pH Standard	S.C. mS/cm	Temp. °C	Turbidity NTU	DO mg/l	ORP mV	TBD
Date: 8-9-05								
Time: 1610								
Method: Grundfos Redi flo	clear	4.30	0.221	17.52	10	NA	220	

PURGE DATA:

	Volume	pH	S.C.	Temp. (C)	Turbidity	DO	ORP	TBD
Date:								
Method:								
Monitor Reading (ppm):								
Well Casing Diameter & Material Type: 2" PVC								
Total Well Depth (TD): 32								
Static Water Level (WL): 23.80								
One ~~Casing~~ Screen Volume(~~gal~~/L): 6.2								
Start Purge (hrs): 1500								
End Purge (hrs): 1610								
Total Purge Time (min): 70								
Total Vol. Purged (~~gal~~/L): 18.8								

NA
See Low Flow Purge Data Sheet

SAMPLE COLLECTION INFORMATION:

Analysis	Preservative	Container Requirements	Collected
TCL VOC	HCL	40 ml VOA Vials	3
1,4-Dioxane	4 C	1 Liter Amber Glass	1

OBSERVATIONS / NOTES:

Circle if Applicable:

MS/MSD	Duplicate ID No.:

Signature(s): NB Redic

TBD: To Be Determined

LOW FLOW PURGE DATA SHEET

PROJECT SITE NAME: NASJRB Willow Grove
PROJECT NUMBER: 2192

WELL ID.: 05-MW10-S
DATE: 8/9/05

365
32.00
TOC
34.00

Time (Hrs.)	Water Level (Ft. below TOC)	Flow (mL/Min.)	pH (S.U.)	S. Cond. (mS/cm)	Turb. (NTU)	DO (mg/L)	Temp. (Celcius)	ORP mV	Salinity % or ppt	Comments
1500	23.80	450	5.09	0.219	650	*	15.26	204	0.0	* DO probe malfunction
1505	23.89	250	4.82	0.228	570		16.66	210	0.0	
1510	23.87	250	4.60	0.256	450		17.71	203	0.0	
1515	23.87	250	4.54	0.241	280		18.10	201	0.0	
1520	23.87	250	4.45	0.228	220		18.15	203	0.0	
1525	23.87	250	4.39	0.221	170		18.35	205	0.0	
1530	23.88	250	4.35	0.224	120		18.12	210	0.0	
1535	23.88	250	4.29	0.226	100		17.52	218	0.0	
1540	23.88	250	4.30	0.226	57		17.54	220	0.0	
1545	23.88	250	4.31	0.221	32		17.56	222	0.0	
1550	23.88	250	4.26	0.221	25		17.70	222	0.0	
1555	23.88	250	4.29	0.221	17		17.66	220	0.0	
1600	23.88	250	4.31	0.221	13		17.82	219	0.0	
1605	23.88	250	4.30	0.221	10		17.52	220	0.0	
1610		sample 05-MW10-S was collected by ND. after purging a total of 6 gallons water clear no odor or sheen present								

SIGNATURE(S): _____

PAGE 1 OF 1

Tetra Tech NUS, Inc.

GROUNDWATER SAMPLE LOG SHEET

Project Site Name: NASJRB Willow Grove
Project No.: 2192

[] Domestic Well Data
[X] Monitoring Well Data
[] Other Well Type:
[] QA Sample Type:

Sample ID No.: 05MW105T
Sample Location: Site 5
Sampled By: N. Neidt
C.O.C. No.:
Type of Sample:
[X] Low Concentration
[] High Concentration

SAMPLING DATA:

	Color Visual	pH Standard	S.C. mS/cm	Temp. °C	Turbidity NTU	DO mg/l	ORP mV	TBD
Date: 8-9-05								
Time: 1415								
Method: Grundfos Reliflo	clear	5.17	0.370	16.23	9.4	NA	130	

PURGE DATA:

	Volume	pH	S.C.	Temp. (C)	Turbidity	DO	ORP	TBD
Date:								
Method:								
Monitor Reading (ppm): 0.0								
Well Casing Diameter & Material Type: 2", PVC								
Total Well Depth (TD): 93	See Low Flow Purge Data Sheet				NA			
Static Water Level (WL): 24.19								
One ~~Casing~~ Screen Volume(~~gal~~/L): 9.3								
Start Purge (hrs): 1255								
End Purge (hrs): 1415								
Total Purge Time (min): 80								
Total Vol. Purged (~~gal~~/L): 24.75								

SAMPLE COLLECTION INFORMATION:

Analysis	Preservative	Container Requirements	Collected
TCL VOC	HCL	40 ml VOA Vials	3
1,4-Dioxane	4 C	1 Liter Amber Glass	1

OBSERVATIONS / NOTES:

Circle if Applicable:

MS/MSD	Duplicate ID No.:

Signature(s): Neb Neidt

TBD: To Be Determined

LOW FLOW PURGE DATA SHEET

PROJECT SITE NAME: NASJRB - Willow Grove
PROJECT NUMBER: 2192
WELL ID.: 08 - MW10 - SI
DATE: 8/9/05

93.00 BGS
15.50 TOC

Time (Hrs.)	Water Level (Ft. below TOC)	Flow (mL/Min.)	pH (S.U.)	S. Cond. (mS/cm)	Turb. (NTU)	DO (mg/L)	Temp. (Celcius)	ORP mV	Salinity % or ppt	Comments
1255	24.19	250	5.54	0.381	58	*	14.97	163	0.0	* DO PROBE
1300	24.29	280	5.37	0.380	50		15.08	159	0.0	malfunction
1305	24.29	280	5.33	0.380	45		15.14	156	0.0	
1310	24.29	280	5.30	0.385	43		16.38	159	0.0	
1315	24.29	280	5.29	0.388	37		16.80	147	0.0	
1320	24.29	280	5.24	0.386	32		16.62	142	0.0	
1325	24.29	280	5.23	0.384	21		16.45	136	0.0	
1330	24.29	280	5.22	0.380	18		16.37	133	0.0	
1335	24.29	280	5.22	0.378	16		16.28	131	0.0	
1340	24.29	280	5.20	0.374	15			131	0.0	
1345	24.29	280	5.19	0.372	12		16.48	131	0.0	
1350	24.29	280	5.19	0.371	11		16.40	131	0.0	
1355	24.29	280	5.18	0.371	11		16.32	131	0.0	
1400	24.29	280	5.18	0.371	10		16.21	131	0.0	
1405	24.29	280	5.17	0.371	9.5		16.20	131	0.0	
1410	24.29	280	5.17	0.370	5.8		16.22	130	0.0	
1415	24.29	280	5.17	0.370	9.4		16.23	130	0.0	Collected Sample

SIGNATURE(S): [illegible]

PAGE 1 OF 1

LOW FLOW PURGE DATA SHEET

PROJECT SITE NAME: NASJRB Willow Grove
PROJECT NUMBER: 2192

WELL ID.: 05-MW10-I
DATE: 8/9/05

29 BGS
31 TOC

Time (Hrs.)	Water Level (Ft. below TOC)	Flow (mL/Min.)	pH (S.U.)	S. Cond. (mS/cm)	Turb. (NTU)	DO (mg/L)	Temp. (Celcius)	ORP mV	Salinity % or ppt	Comments
1300	24.53	200	7.42	0.325	11	5.42	16.95	264	0.01	
1305	24.55	200	7.23	0.327	8	4.04	17.33	222	0.01	
1310	24.55	200	7.20	0.329	11	3.55	16.98	129	0.01	
1315	24.56	200	7.20	0.329	11	3.42	16.82	107	0.01	
1320	24.56	200	7.20	0.328	12	3.27	16.61	98	0.01	
1325	24.56	200	7.20	0.328	13	3.13	16.53	92	0.01	
1330	24.56	200	7.20	0.326	13	3.12	16.42	87	0.01	
1335	24.56	200	7.20	0.326	11	3.11	16.23	85	0.01	
1340	24.56	200	7.20	0.325	7.6	3.12	16.07	84	0.01	
1345	24.56	200	7.21	0.324	8.3	3.10	16.00	82	0.01	
1350	24.56	200	7.21	0.323	6.2	3.09	15.46	81	0.01	
1355	24.56	200	7.21	0.322	7.1	3.09	15.85	81	0.01	
1400	24.56	200	7.21	0.322	5.9	3.09	15.83	81	0.01	
1405	24.56	200	7.21	0.322	3.7	3.09	15.80	80	0.01	
1410	24.56		7.21	0.322	3.5	3.09	15.78	80	0.01	
1415	24.56	200	7.21	0.322	3.2	3.09	15.76	80	0.01	
1420	sample	05-MW10-I	MS/MSD	was	collected	by	CM	water		
		clear	no odor or sheen							

SIGNATURE(S): _____

PAGE___OF___

Tetra Tech NUS, Inc.

GROUNDWATER SAMPLE LOG SHEET

Page___ of ___

Project Site Name: NASJRB Willow Grove
Project No.: 2192

[] Domestic Well Data
[X] Monitoring Well Data
[] Other Well Type:
[] QA Sample Type:

Sample ID No.: 05-MW11-S
Sample Location: MW11-S
Sampled By: CM
C.O.C. No.:
Type of Sample:
[X] Low Concentration
[] High Concentration

SAMPLING DATA:

	Color Visual	pH Standard	S.C. mS/cm	Temp. °C	Turbidity NTU	DO mg/l	ORP mV	TBD
Date: 8/11/05								
Time: 1540								
Method: Redi flo-2 Pump	Clear	4.69	0.182	17.65	0.00	–	197	

PURGE DATA:

	Volume	pH	S.C.	Temp. (C)	Turbidity	DO	ORP	TBD
Date: 8/11/05								
Method: Redi flo-2 Pump								
Monitor Reading (ppm):								
Well Casing Diameter & Material Type: 2" PVC		(See	Low	Flow	Purge	Data	Sheet)	
Total Well Depth (TD): 26.95								
Static Water Level (WL): 11.61								
One Casing Volume(gal/L):								
Start Purge (hrs): 1420								
End Purge (hrs): 1535								
Total Purge Time (min): 75								
Total Vol. Purged (gal/L): 5.5								

SAMPLE COLLECTION INFORMATION:

Analysis	Preservative	Container Requirements	Collected
TCL VOC	HCL	40 ml VOA Vials	3
1,4-Dioxane	4 C	1 Liter Amber Glass	1

OBSERVATIONS / NOTES:

Circle if Applicable:

MS/MSD	Duplicate ID No.:

Signature(s):

TBD: To Be Determined

LOW FLOW PURGE DATA SHEET

PROJECT SITE NAME: NASJRB Willow Grove
PROJECT NUMBER: 2193

WELL ID.: 05-MW11-S
DATE: 8/11/05

Time (Hrs.)	Water Level (Ft. below TOC)	Flow (mL/Min.)	pH (S.U.)	S. Cond. (mS/cm)	Turb. (NTU)	DO (mg/L)	Temp. (Celcius)	ORP mV	Salinity % or ppt	Comments
1420	11.61	200	5.41	0.187	1.20		16.95	203	0.0	
1425	11.61	200	5.27	0.186	0.30		17.25	196	0.0	
1430	11.61	200	5.13	0.186	0.00		17.35	194	0.0	
1435	11.61	200	5.03	0.185	0.00		17.30	191	0.0	
1440	11.61	200	4.98	0.184	0.00		17.32	190	0.0	
1445	11.61	200	4.93	0.184	0.00		17.29	189	0.0	
1450	11.61	200	4.87	0.183	0.00		17.28	190	0.0	
1455	11.61	200	4.81	0.183	0.00		17.55	191	0.0	
1500	11.61	200	4.77	0.182	0.00		17.52	192	0.0	
1505	11.61	200	4.76	0.182	0.00		17.62	192	0.0	
1510	11.61	200	4.72	0.182	0.00		17.63	193	0.0	
1515	11.61	200	4.68	0.182	0.00		17.73	194	0.0	
1520	11.61	200	4.67	0.182	0.00		17.66	195	0.0	
1525	11.61	200	4.66	0.181	0.00		17.74	195	0.0	
1530	11.61	200	4.68	0.182	0.00		17.68	196	0.0	
1535	11.61	200	4.69	0.182	0.00		17.65	197	0.0	
1540	Sample 05-MW11-S was collected after removing 5.5 gallons from the well. The water was clear with no odor or sheen									

SIGNATURE(S): _____

PAGE___OF___

Tetra Tech NUS, Inc.

GROUNDWATER SAMPLE LOG SHEET

Page___ of ___

Project Site Name: NASJRB Willow Grove
Project No.: 2192

[] Domestic Well Data
[X] Monitoring Well Data
[] Other Well Type:
[] QA Sample Type:

Sample ID No.: 05-MW11-I
Sample Location: MW11-I
Sampled By: CM
C.O.C. No.:
Type of Sample:
[X] Low Concentration
[] High Concentration

SAMPLING DATA:

	Color Visual	pH Standard	S.C. mS/cm	Temp. °C	Turbidity NTU	DO mg/l	ORP mV	TBD
Date: 8/11/05								
Time: 1340								
Method: Rediflo-2 Pump	Clear	4.68	1.84	17.48	0.00	—	207	

PURGE DATA:

	Volume	pH	S.C.	Temp. (C)	Turbidity	DO	ORP	TBD
Date: 8/11/05								
Method: Rediflo-2 Pump								
Monitor Reading (ppm):								
Well Casing Diameter & Material Type: 2" PVC		(See Low Flow Purge Data Sheet)						
Total Well Depth (TD): 51.70								
Static Water Level (WL): 11.64								
One Casing Volume(gal/L):								
Start Purge (hrs): 1225								
End Purge (hrs): 1335								
Total Purge Time (min): 70								
Total Vol. Purged (gal/L): 6.5								

SAMPLE COLLECTION INFORMATION:

Analysis	Preservative	Container Requirements	Collected
TCL VOC	HCL	40 ml VOA Vials	
1,4-Dioxane	4 C	1 Liter Amber Glass	

OBSERVATIONS / NOTES:

Circle if Applicable:

MS/MSD	Duplicate ID No.:

Signature(s):

TBD: To Be Determined

LOW FLOW PURGE DATA SHEET

PROJECT SITE NAME: NASJRB Willow Grove
PROJECT NUMBER: 8192

WELL ID.: 05-MW11-I
DATE: 8/11/05

Time (Hrs.)	Water Level (Ft. below TOC)	Flow (mL/Min.)	pH (S.U.)	S. Cond. (mS/cm)	Turb. (NTU)	DO (mg/L)	Temp. (Celcius)	ORP mV	Salinity % or ppt	Comments
1225	11.65	200	5.67	0.199	25		18.46	198	0.0	
1230	11.65	200	5.25	0.194	11		20.13	195	0.0	
1235	11.67	200	4.98	0.190	1.2		15.94	194	0.0	
1240	11.67	200	4.93	0.189	0.2		16.35	198	0.0	
1245	11.67	200	4.94	0.188	0.0		16.31	198	0.0	
1250	11.67	200	4.90	0.188	0.0		16.20	198	0.0	
1255	11.67	200	4.88	0.187	0.0		16.06	200	0.0	
1300	11.67	200	4.80	0.186	0.0		16.34	202	0.0	
1305	11.67	200	4.78	0.186	0.0		16.34	201	0.0	
1310	11.67	200	4.74	0.184	0.0		16.52	204	0.0	
1315	11.67	200	4.71	0.185	0.0		16.86	205	0.0	
1320	11.67	200	4.69	0.185	0.0		17.05	206	0.0	
1325	11.67	200	4.68	0.185	0.0		17.38	207	0.0	
1330	11.67	200	4.67	0.184	0.0		18.60	206	0.0	
1335	11.67	200	4.68	0.184	0.0		17.48	207	0.0	
1340	Sample 05-MW11-I was collected after purging 6.5 gallons from the well. The water was clear with no odor or sheen present									

SIGNATURE(S): _____

PAGE___OF___

Tetra Tech NUS, Inc.

GROUNDWATER SAMPLE LOG SHEET

Page___ of ___

Project Site Name: NASJRB Willow Grove
Project No.: 2192

[] Domestic Well Data
[X] Monitoring Well Data
[] Other Well Type:
[] QA Sample Type:

Sample ID No.: 05-MW11-D
Sample Location: MW11-D
Sampled By: CM
C.O.C. No.:
Type of Sample:
[X] Low Concentration
[] High Concentration

SAMPLING DATA:

	Color Visual	pH Standard	S.C. mS/cm	Temp. °C	Turbidity NTU	DO mg/l	ORP mV	TBD
Date: 8/11/05								
Time: 1120								
Method: Rediflo-2 PUMP	Clear	5.85	0.343	16.17	1.9	—	-33	

PURGE DATA:

	Volume	pH	S.C.	Temp. (C)	Turbidity	DO	ORP	TBD
Date: 8/11/05								
Method: Rediflo-2 PUMP								
Monitor Reading (ppm): 0.0								
Well Casing Diameter & Material Type: 2" PVC		See	Low	Flow	Purge	Data	Sheet	
Total Well Depth (TD): 150.54								
Static Water Level (WL): 26.45								
One Casing Volume(gal/L):								
Start Purge (hrs): 0950								
End Purge (hrs): 1115								
Total Purge Time (min): 85								
Total Vol. Purged (gal/L): 6.0								

SAMPLE COLLECTION INFORMATION:

Analysis	Preservative	Container Requirements	Collected
TCL VOC	HCL	40 ml VOA Vials	3
1,4-Dioxane	4 C	1 Liter Amber Glass	1

OBSERVATIONS / NOTES:

Circle if Applicable:

MS/MSD	Duplicate ID No.:

Signature(s):

TBD: To Be Determined

LOW FLOW PURGE DATA SHEET

PROJECT SITE NAME: NASJRB Willow Grove
PROJECT NUMBER: 2193

WELL ID.: 05-MW01-D
DATE: 8/11/05

Time (Hrs.)	Water Level (Ft. below TOC)	Flow (mL/Min.)	pH (S.U.)	S. Cond. (mS/cm)	Turb. (NTU)	DO (mg/L)	Temp. (Celcius)	ORP mV	Salinity % or ppt	Comments
0950	26.45	200	4.96	0.381	8.7		17.00	173	0.0	Clear No odor Sheen
0955	26.49	200	5.52	0.378	75.9		16.73	11	0.0	Lt Brn No odor or Sheen
1000	26.49	200	5.63	0.379	200		16.46	-58	0.0	Brn No odor or Sheen
1005	26.49	200	5.63	0.378	95		16.08	-67	0.0	Lt Brn No odor or Sheen
1010	26.49	200	5.64	0.381	55		15.90	-66	0.0	
1015	26.49	200	5.66	0.376	26		15.80	-61	0.0	
1020	26.49	200	5.71	0.370	15		15.76	-57	0.0	
1025	26.49	200	5.72	0.366	11		15.71	-47	0.0	
1030	26.49	200	5.74	0.360	7.8		15.80	-43	0.0	
1035	26.49	200	5.76	0.355	5.9		15.65	-36	0.0	
1040	26.49	200	5.79	0.354	4.7		15.82	-35	0.0	
1045	26.49	200	5.79	0.353	4.3		15.82	-35	0.0	
1050	26.49	200	5.81	0.348	3.6		16.10	-32	0.0	
1055	26.49	200	5.82	0.344	2.5		16.20	-31	0.0	
1100	26.49	200	5.83	0.343	2.7		16.22	-31	0.0	
1105	26.49	200	5.84	0.344	2.9		16.08	-32	0.0	
1110	26.49	200	5.84	0.343	2.7		16.16	-33	0.0	
1115	26.49	200	5.85	0.343	1.9		16.17	-33	0.0	
1120	Sample 05-MW01-D was collected after purging 6 gallons from the well. The water was clear with no odor or sheens present									

SIGNATURE(S): _____

PAGE___OF___

Tetra Tech NUS, Inc.

GROUNDWATER SAMPLE LOG SHEET

Page___ of ___

Project Site Name: NASJRB Willow Grove
Project No.: 2192

[] Domestic Well Data
[X] Monitoring Well Data
[] Other Well Type:
[] QA Sample Type:

Sample ID No.: 05MW125
Sample Location:
Sampled By: DA/DW
C.O.C. No.:
Type of Sample:
[X] Low Concentration
[] High Concentration

SAMPLING DATA:

	Color Visual	pH Standard	S.C. mS/cm	Temp. °C	Turbidity NTU	DO mg/l	ORP mV	Other NA
Date: 8-25-05								
Time: 1215								
Method: Redi Flo 2 Pump	clear	5.66	.168	19.92	19	3.19	184	

PURGE DATA:

	Volume	pH	S.C.	Temp. (C)	Turbidity	DO	ORP	Other
Date: 8-25-05								
Method: Redi Flo 2 Pump								
Monitor Reading (ppm): 4.3	—	SEE	LOW	FLOW	PURGE	DATA	SHEET	—
Well Casing Diameter & Material								
Type: 2" PVC								
Total Well Depth (TD): 70								
Static Water Level (WL): 28.88								
One Casing Volume(gal/L): 7								
Start Purge (hrs): 1117								
End Purge (hrs): 1210								
Total Purge Time (min): 53								
Total Vol. Purged (gal/L): 4								

SAMPLE COLLECTION INFORMATION:

Analysis	Preservative	Container Requirements	Collected
TCL VOC	HCl	3 x 40 ml	✓
1,4-Dioxane	Ice	1 x 1 L amber	✓
methane, ethane, ethene	HCl	2 x 40 ml	✓
anions, ORP	Ice	1 L Poly	✓
TOC	H2SO4	500 ml poly	✓

OBSERVATIONS / NOTES:

Sample collected from pump discharge.

Circle if Applicable:

MS/MSD	Duplicate ID No.:

Signature(s): [illegible]

Tetra Tech NUS, Inc.

LOW FLOW PURGE DATA SHEET

PROJECT SITE NAME: ~~NWS Lahe~~ Willow Grove
PROJECT NUMBER: ~~1940~~ 2192

WELL ID.: 05MW12S
DATE: 8-25-05

Time (Hrs.)	Water Level (Ft. below TOC)	Flow (mL/Min.)	pH (S.U.)	Cond. (mS/cm)	Turb. (NTU)	DO (mg/L)	Temp. (Celsius)	ORP (mV)	Comments
1117	28.91	300							Start Purge
1120	28.95	300	5.65	0.187	190	3.64	18.43	237	CLEAR
1125	28.95	300	5.66	0.175	160	3.25	18.60	184	CLOUDY TAN
1130	28.95	300	5.67	0.175	55	3.12	18.66	173	~~TAN~~ LIGHT TAN
1135	28.95	300	5.65	0.176	70	3.09	19.27	166	LIGHT TAN
1140	28.95	300	5.63	0.175	50	3.12	18.95	171	LIGHT TAN
1145	28.95	300	5.64	0.173	37	3.15	19.35	175	LIGHT TAN
1150	28.95	300	5.64	0.170	26	3.14	19.65	179	LIGT TAN
1155	28.95	300	5.66	0.170	26	3.10	20.46	183	LIGHT TAN
1200	28.95	300	5.66	0.169	19	3.13	20.95	183	LIGHT TAN
1205	28.95	300	5.66	0.169	16	3.17	20.62	183	CLEAR
1210	28.95	300	5.66	0.168	19	3.19	19.92	184	CLEAR
1215									SAMPLE COLLECTED

SIGNATURE(S): David Mulah

PAGE___OF___

Tetra Tech NUS, Inc.

GROUNDWATER SAMPLE LOG SHEET

Project Site Name: NASJRB Willow Grove
Project No.: 2192

[] Domestic Well Data
[X] Monitoring Well Data
[] Other Well Type:
[] QA Sample Type:

Sample ID No.: 05MW12I
Sample Location: Site 5
Sampled By: N. Nedic
C.O.C. No.:
Type of Sample:
[X] Low Concentration
[] High Concentration

SAMPLING DATA:

	Color Visual	pH Standard	S.C. mS/cm	Temp. °C	Turbidity NTU	DO mg/l	ORP mV	TBD
Date: 8-17-05								
Time: 1105								
Method: Grundfos Redi-Flo	Sl. cloudy	5.50	0.146	15.38	160	5.31	161	

PURGE DATA:

	Volume	pH	S.C.	Temp. (C)	Turbidity	DO	ORP	TBD
Date:								
Method:								
Monitor Reading (ppm): 0.0								
Well Casing Diameter & Material		See Low Flow						
Type: 2" PVC		Purge Data Sheet						
Total Well Depth (TD): 113.5								
Static Water Level (WL): 28.44								
One Casing Volume(~~gal~~/L): 6.2								
Start Purge (hrs): 0940								
End Purge (hrs): 1105								
Total Purge Time (min): 85								
Total Vol. Purged (~~gal~~/L): 25.5								

SAMPLE COLLECTION INFORMATION:

Analysis	Preservative	Container Requirements	Collected
TCL VOC	HCL	40 ml VOA Vials	3
1,4-Dioxane	4 C	1 Liter Amber Glass	1

OBSERVATIONS / NOTES:

Circle if Applicable:

MS/MSD	Duplicate ID No.:

Signature(s): Neb Nedic

TBD: To Be Determined

LOW FLOW PURGE DATA SHEET

PROJECT SITE NAME: NAS JRB Willow Grove
PROJECT NUMBER: 2192

WELL ID.: OSMW 12I
DATE: 8-17-05

Time (Hrs.)	Water Level (Ft. below TOC)	Flow (mL/Min.)	pH (S.U.)	S. Cond. (mS/cm)	Turb. (NTU)	DO (mg/L)	Temp. (Celcius)	ORP mV	Salinity % or ppt	Comments
0940	28.44	300	5.35	0.167	0	7.92	16.83	299	0.01	
0945	28.44	300	5.37	0.155	0	6.34	16.88	252	0.01	
0950	28.44	300	5.40	0.153	95	5.85	16.91	212	0.01	
0955	28.44	300	5.41	0.151	81	5.60	16.95	159	0.01	
1000	28.44	300	5.42	0.149	110	5.42	17.05	158	0.01	
1005	28.44	300	5.44	0.147	130	5.33	17.21	159	0.01	
1010	28.44	300	5.42	0.146	140	5.22	18.57	162	0.01	
1015	28.44	300	5.42	0.146	130	5.21	18.46	161	0.01	
1020	28.44	300	5.44	0.147	130	5.22	18.42	160	0.01	
1025	28.44	300	5.44	0.147	130	5.25	18.42	160	0.01	
1030	28.44	300	5.46	0.147	120	5.28	18.52	160	0.01	
1035	28.44	300	5.46	0.147	130	5.33	18.60	161	0.01	
1040	28.44	300	5.47	0.148	120	5.40	18.76	162	0.01	
1045	28.46	300	5.47	0.147	110	5.39	18.91	162	0.01	
1050	28.46	300	5.48	0.147	110	5.37	19.20	161	0.01	
1055	28.48	300	5.48	0.147	100	5.37	19.23	161	0.01	
1100	28.48	300	5.50	0.147	100	5.33	19.42	161	0.01	
1105	28.48	300	5.50	0.146	110	5.31	19.38	161	0.01	Collected Sample

SIGNATURE(S): Neb Radic

Tetra Tech NUS, Inc.

GROUNDWATER SAMPLE LOG SHEET

Page___ of ___

Project Site Name: NASJRB Willow Grove
Project No.: 2192

[] Domestic Well Data
[X] Monitoring Well Data
[] Other Well Type:
[] QA Sample Type:

Sample ID No.: 05MW13I
Sample Location:
Sampled By: DWIDA
C.O.C. No.:
Type of Sample:
[X] Low Concentration
[] High Concentration

SAMPLING DATA:

	Color Visual	pH Standard	S.C. mS/cm	Temp. °C	Turbidity NTU	DO mg/l	ORP mV	Other NA
Date: 8/24/05								
Time: 1355								
Method: Redi Flo 2	clear	6.97	.385	16.58	19	1.53	40	

PURGE DATA:

	Volume	pH	S.C.	Temp. (C)	Turbidity	DO	ORP	Other
Date: 8/24/05								
Method: Redi Flo 2								
Monitor Reading (ppm): 4.1	—	See	Low	Flow	Purge	Data	SHEET	—
Well Casing Diameter & Material								
Type: 2" PVC								
Total Well Depth (TD): 142								
Static Water Level (WL): 27.66								
One Casing Volume(gal/L): 18.6								
Start Purge (hrs): 1300								
End Purge (hrs): 1350								
Total Purge Time (min): 50								
Total Vol. Purged (gal/L): 4.5								

SAMPLE COLLECTION INFORMATION:

Analysis	Preservative	Container Requirements	Collected
TCL VOC	HCl	3 x 40 ml	✓
1,4-Dioxane	Ice	1 x 1 L amber	✓
methane, ethane, ethene	HCl	2 x 40 ml	✓
anions, ORP	Ice	1 L Poly	✓
TOC	H2SO4	500 ml poly	✓

OBSERVATIONS / NOTES:

Sample collected from pump discharge

Circle if Applicable:

MS/MSD

Duplicate ID No.:

Signature(s): David Wheeler

Tetra Tech NUS, Inc.

LOW FLOW PURGE DATA SHEET

PROJECT SITE NAME: ~~NWG Earle~~ Willow Grove
PROJECT NUMBER: ~~1940~~ 2192

WELL ID.: 05MW13I
DATE: 8/24/05

Time (Hrs.)	Water Level (Ft. below TOC)	Flow (mL/Min.)	pH (S.U.)	Cond. (mS/cm)	Turb. (NTU)	DO (mg/L)	Temp. (Celsius)	ORP (mV)	Comments
1300	27.66	550							START PURGE
1305	27.75	550	8.05	.495	73	4.64	16.95	188	
1310	27.82	250	7.24	.419	700	1.50	15.35	19	CLOUDY, WHITE
1315	27.72	375	7.08	.398	390	1.37	17.83	33	CLOUDY WHITE
1320	27.73	375	7.04	.404	190	1.42	16.76	21	CLOUDY WHITE
1325	27.73	375	7.01	.395	110	1.45	16.62	22	CLOUDY WHITE
1330	27.73	375	7.00	.390	65	1.49	16.69	28	CLOUDY WHITE
1335	27.73	375	6.99	.388	45	1.51	16.58	33	CLEAR
1340	27.73	375	6.97	.386	32	1.53	16.64	37	CLEAR
1345	27.74	375	6.97	.385	27	1.54	16.54	40	CLEAR
1350	27.74	375	6.97	.385	19	1.53	16.58	40	CLEAR
1355									SAMPLE COLLECTED

SIGNATURE(S): _____

PAGE___OF___

Tetra Tech NUS, Inc.

GROUNDWATER SAMPLE LOG SHEET

Page___ of ___

Project Site Name: NASJRB Willow Grove
Project No.: 2192

[] Domestic Well Data
[X] Monitoring Well Data
[] Other Well Type:
[] QA Sample Type:

Sample ID No.: 05MW145
Sample Location:
Sampled By: DA/DW
C.O.C. No.:
Type of Sample:
[X] Low Concentration
[] High Concentration

SAMPLING DATA:

	Color Visual	pH Standard	S.C. mS/cm	Temp. °C	Turbidity NTU	DO mg/l	ORP mV	Other NA
Date: 8/24/05								
Time: 1605								
Method: Redi Flo 2 Pump	Gray	6.82	.413	15.85	550	1.02	83	

PURGE DATA:

	Volume	pH	S.C.	Temp. (C)	Turbidity	DO	ORP	Other
Date: 8/24/05								
Method: Redi Flo 2 Pump								
Monitor Reading (ppm): 4	—	see	Low	Flow	Purge	Data	Sheet	—
Well Casing Diameter & Material								
Type: 2" PVC								
Total Well Depth (TD): 66								
Static Water Level (WL): 22.78								
One Casing Volume(gal/L):								
Start Purge (hrs): 1427								
End Purge (hrs): 1600								
Total Purge Time (min): 93								
Total Vol. Purged (gal/L): 7								

SAMPLE COLLECTION INFORMATION:

Analysis	Preservative	Container Requirements	Collected
TCL VOC	HCl	3 x 40 ml	✓
1,4-Dioxane	Ice	1 x 1 L amber	✓
methane, ethane, ethene	HCl	2 x 40 ml	✓
anions, ORP	Ice	1 L Poly	✓
TOC	H2SO4	500 ml poly	✓

OBSERVATIONS / NOTES:

Sample collected from pump discharge.

Circle if Applicable:

MS/MSD	Duplicate ID No.:

Signature(s): Donald [illegible]

Tetra Tech NUS, Inc.

LOW FLOW PURGE DATA SHEET

PROJECT SITE NAME: NWS Earle
PROJECT NUMBER: 1940

WELL ID.: 05 MW 14 S
DATE: 8/24/05

Time (Hrs.)	Water Level (Ft. below TOC)	Flow (mL/Min.)	pH (S.U.)	Cond. (mS/cm)	Turb. (NTU)	DO (mg/L)	Temp. (Celsius)	ORP (mV)	Comments
1427	22.86								
1430	23.30	200	6.81	.427	>1000	2.57	16.81	134	BEGIN PURGE
1435	23.19	200	6.72	.437	>1000	2.57	17.57	120	CLOUDY GRAYISH TAN
1440	23.18	200	6.75	.447	>1000	2.32	17.97	107	CLOUDY GRAYISH TAN
1445	23.26	300	6.79	.462	>1000	1.87	17.12	95	CLOUDY GRAY
1450	23.27	300	6.99	.523	>1000	1.37	17.02	83	CLOUDY GRAY
1455	23.30	300	7.07	.528	>1000	1.23	16.85	78	CLOUDY GRAY
1500	23.32	300	7.02	.511	>1000	1.11	16.54	79	CLOUDY GRAY
1505	23.33	300	7.01	.501	>1000	1.06	16.44	78	CLOUDY GRAY
1510	23.34	300	6.97	.486	>1000	1.03	16.21	78	CLOUDY GRAY
1515	23.35	300	6.95	.474	>1000	1.01	16.28	79	CLOUDY GRAY
1520	23.35	300	6.91	.468	>1000	0.98	16.14	80	CLOUDY GRAY, CLEARING
1525	23.36	300	6.89	.457	1100	0.98	16.08	80	CLOUDY GRAY
1530	23.40	300	6.87	.444	1100	0.98	15.72	81	CLOUDY GRAY
1535	23.40	300	6.85	.437	950	0.98	15.73	81	CLOUDY GRAY
1540	23.39	300	6.84	.430	850	0.99	15.88	82	CLOUDY GRAY
1545	23.39	300	6.83	.424	750	0.99	16.07	82	CLOUDY GRAY
1550	23.39	300	6.83	.420	550	1.02	15.74	82	CLOUDY GRAY
1555	23.39	300	6.82	.416	600	1.03	15.71	82	CLOUDY GRAY
1600	23.39	300	6.82	.413	550	1.02	15.85	83	CLOUDY GRAY
1605									SAMPLE COLLECTED

SIGNATURE(S): [illegible]

PAGE___OF___

Tetra Tech NUS, Inc.

GROUNDWATER SAMPLE LOG SHEET

Page___ of ___

Project Site Name: NASJRB Willow Grove
Project No.: 2192

[] Domestic Well Data
[X] Monitoring Well Data
[] Other Well Type:
[] QA Sample Type:

Sample ID No.: 05MW14I
Sample Location:
Sampled By: DW/DA
C.O.C. No.:
Type of Sample:
[X] Low Concentration
[] High Concentration

SAMPLING DATA:

	Color Visual	pH Standard	S.C. mS/cm	Temp. °C	Turbidity NTU	DO mg/l	ORP mV	Other NA
Date: 8-25-05								
Time: 1550								
Method: Hdi Flo 2	clear	6.84	.346	14.62	9.7	1.16	-33	~~clear~~

PURGE DATA:

	Volume	pH	S.C.	Temp. (C)	Turbidity	DO	ORP	Other
Date: 8/25/05								
Method: Hdi Flo 2								
Monitor Reading (ppm): 12.2	—	See	Low	Flow	Purge	Data	Sheet	—
Well Casing Diameter & Material								
Type: 2" PVC								
Total Well Depth (TD): 150								
Static Water Level (WL): 22.94								
One Casing Volume(gal/L): 21								
Start Purge (hrs): 1317								
End Purge (hrs): 1455								
Total Purge Time (min): 98								
Total Vol. Purged (gal/L): 8								

SAMPLE COLLECTION INFORMATION:

Analysis	Preservative	Container Requirements	Collected
TCL VOC	HCl	3 x 40 ml	✓
1,4-Dioxane	Ice	1 x 1 L amber	✓
methane, ethane, ethene	HCl	2 x 40 ml	✓
anions, ORP	Ice	1 L Poly	✓
TOC	H2SO4	500 ml poly	✓

OBSERVATIONS / NOTES:

Sample collected from pump discharge.

Circle if Applicable:

MS/MSD

Duplicate ID No.: DUP 04 (1000)

Signature(s): Dall Wlah

Tetra Tech NUS, Inc.

LOW FLOW PURGE DATA SHEET

PROJECT SITE NAME: ~~Fort Dix~~ Willow Grove
PROJECT NUMBER: ~~2339~~ 2192

WELL ID.: 05MW14I
DATE: 8-25-05

Time (Hrs.)	Water Level (Ft. below TOC)	Flow (mL/Min.)	pH (S.U.)	Cond. (mS/cm)	Turb. (NTU)	DO (mg/L)	Temp. (Celsius)	ORP (mV)	Comments
1317	22.94	350							
1320	23.02	350	6.89	0.435	70	0.75	15.86	-42	START PURGING
1325	22.98	325	6.93	0.439	360	0.67	15.30	-98	CLOUDY, LIGHT TAN
1330	22.99	325	6.99	0.437	140	0.66	15.66	-99	CLOUDY, REDISH TAN
1335	22.99	325	7.00	0.434	60	0.66	15.94	-96	CLOUDY, TAN
1340	22.98	325	6.98	0.427	25	0.66	15.62	-90	LIGHT TAN
1345	22.99	325	6.96	0.411	18	0.63	15.12	-86	CLEAR
1350	22.99	325	6.93	0.406	13	0.64	15.26	-80	CLEAR
1355	22.98	325	6.90	0.395	12	0.66	15.43	-75	CLEAR
1400	22.98	325	6.88	0.388	12	0.70	15.53	-70	CLEAR
1405	22.99	325	6.88	0.382	13	0.73	15.12	-65	CLEAR
1410	22.98	325	6.87	0.378	13	0.79	15.03	-62	CLEAR
1415	22.98	325	6.86	0.371	12	0.81	15.06	-58	CLEAR
1420	22.98	325	6.85	0.366	12	0.85	15.33	-55	CLEAR
1425	22.98	325	6.85	0.363	12	0.89	14.90	-51	CLEAR
1430	22.98	325	6.85	0.360	13	0.94	14.98	-49	CLEAR
1435	22.99	325	6.85	0.358	11	0.97	14.76	-45	CLEAR
1440	22.99	325	6.84	0.352	8.6	1.05	14.64	-44	CLEAR
1445	22.99	325	6.84	0.349	8.7	1.06	14.70	-40	CLEAR
1450	22.98	325	6.84	0.347	9.8	1.11	14.60	-35	CLEAR
1455	22.98	325	6.84	0.346	9.7	1.16	14.62	-33	CLEAR
1500									SAMPLE TAKEN

SIGNATURE(S): Paul Wilson

PAGE___OF___

Tetra Tech NUS, Inc.

GROUNDWATER SAMPLE LOG SHEET

Page___ of ___

Project Site Name: NASJRB Willow Grove
Project No.: 2192

[] Domestic Well Data
[X] Monitoring Well Data
[] Other Well Type:
[] QA Sample Type:

Sample ID No.: 05 MW 155
Sample Location:
Sampled By: DW/DA
C.O.C. No.:
Type of Sample:
[X] Low Concentration
[] High Concentration

SAMPLING DATA:

	Color Visual	pH Standard	S.C. mS/cm	Temp. °C	Turbidity NTU	DO mg/l	ORP mV	Other NA
Date: 8/24/05								
Time: 1230								
Method: RediFlo 2	clear	6.75	0.247	20.0	14	4.56	122	

PURGE DATA:

	Volume	pH	S.C.	Temp. (C)	Turbidity	DO	ORP	Other
Date: 8/24/05								
Method: RediFlo 2								
Monitor Reading (ppm): 17.9	—	SEE	LOW	FLOW	DATA	SHEET	—	
Well Casing Diameter & Material								
Type: 2" PVC								
Total Well Depth (TD): 45								
Static Water Level (WL): 16.90								
One Casing Volume(gal/L): 4.5								
Start Purge (hrs): 1103								
End Purge (hrs): 1220								
Total Purge Time (min): 77								
Total Vol. Purged (gal/L): 6.5								

SAMPLE COLLECTION INFORMATION:

Analysis	Preservative	Container Requirements	Collected
TCL VOC	HCl	3 x 40 ml	✓
1,4-Dioxane	Ice	1 x 1 L amber	✓
methane, ethane, ethene	HCl	2 x 40 ml	✓
anions, ORP	Ice	1 L Poly	✓
TOC	H2SO4	500 ml poly	✓

OBSERVATIONS / NOTES:

Sample collected from pump discharge.

Circle if Applicable:

MS/MSD

Duplicate ID No.:

Signature(s): Donald Wheeler

Tetra Tech NUS, Inc.

LOW FLOW PURGE DATA SHEET

PROJECT SITE NAME: ~~NWS Earle~~ Willow Grove
PROJECT NUMBER: ~~1940~~ 2192

WELL ID.: 05 MW 15S
DATE: 8/24/05

Time (Hrs.)	Water Level (Ft. below TOC)	Flow (mL/Min.)	pH (S.U.)	Cond. (mS/cm)	Turb. (NTU)	DO (mg/L)	Temp. (Celsius)	ORP (mV)	Comments
1103	16.90	350							
1105	19.24	350	9.65	0.354	>1000	5.19	16.13	118	START PURGE
1110	18.38	350	9.57	0.347	>1000	4.92	16.98	104	CLOUDY, TAN, NO ODOR, GROUT PARTIC
1115	18.97	275	9.33	0.351	1100	4.82	18.41	103	CLOUDY WHITE
1120	19.01	350	8.68	0.365	600	4.83	18.21	121	CLOUDY WHITE
1125	19.01	350	8.30	0.366	320	4.88	18.20	135	CLOUDY WHITE
1130	18.98	350	7.30	0.338	150	4.84	18.56	145	CLOUDY WHITE
1135	18.97	350	6.82	0.305	95	4.76	18.43	116	SLIGHTLY CLOUDY, TAN
1140	18.96	350	6.60	0.292	55	4.72	18.53	106	SLIGHTLY CLOUDY, TAN
1145	18.96	350	6.53	0.283	45	4.63	18.57	107	SLIGHTLY CLOUDY, TAN
1150	18.95	350	6.40	0.272	38	4.62	19.37	110	LIGHT TAN
1155	18.92	350	6.36	0.264	24	4.68	19.03	112	LIGHT TAN
1200	18.87	350	6.32	0.260	23	4.68	19.18	114	CLEAR
1205	18.83	350	6.30	0.253	19	4.62	19.45	117	CLEAR
1210	18.79	350	6.28	0.252	26	4.61	19.67	119	CLEAR
1215	18.70	350	6.25	0.247	13	4.66	19.77	121	CLEAR
1220	18.65	350	6.25	0.247	14	4.56	20.0	122	CLEAR
1230									SAMPLE COLLECTED

SIGNATURE(S): Daniel Nikolas

Tetra Tech NUS, Inc.

GROUNDWATER SAMPLE LOG SHEET

Page___ of ___

Project Site Name: NASJRB Willow Grove
Project No.: 2192

[] Domestic Well Data
[X] Monitoring Well Data
[] Other Well Type:
[] QA Sample Type:

Sample ID No.: 05MW15I
Sample Location:
Sampled By: DW/DA
C.O.C. No.:
Type of Sample:
[X] Low Concentration
[] High Concentration

SAMPLING DATA:

	Color Visual	pH Standard	S.C. mS/cm	Temp. °C	Turbidity NTU	DO mg/l	ORP mV	TBD
Date: 8/24/05								
Time: 1040								
Method: RediFlo 2 Pump	Clear	6.02	.343	14.03	3.6	2.76	141	—

PURGE DATA:

	Volume	pH	S.C.	Temp. (C)	Turbidity	DO	ORP	TBD
Date: 8/24/05								
Method: RediFlo 2 Pump								
Monitor Reading (ppm): 16.2	—	See	Low	Flow	Purge	data	sheet	—
Well Casing Diameter & Material								
Type: 2" PVC								
Total Well Depth (TD): 150'								
Static Water Level (WL): 17.63								
One Casing Volume(gal/L):								
Start Purge (hrs): 0915								
End Purge (hrs): 1030								
Total Purge Time (min): 75								
Total Vol. Purged (gal/L): 8								

SAMPLE COLLECTION INFORMATION:

Analysis	Preservative	Container Requirements	Collected
TCL VOC	HCL	40 ml VOA Vials	✓
1,4-Dioxane	4°C	1 Liter Amber Glass	✓
TOC	H_2SO_4	500 ml Poly	✓
Anions, ORP	4°C	1 l Poly	✓
methanol	HCl	2x40ml	✓

OBSERVATIONS / NOTES:

sample collected from pump discharge

Circle if Applicable:

MS/MSD | Duplicate ID No.:

Signature(s): [illegible]

TBD: To Be Determined

LOW FLOW PURGE DATA SHEET

PROJECT SITE NAME: NASJRB Willow Grove
PROJECT NUMBER: 2192

WELL ID.: 05MW15I
DATE: 8/24/05

Time (Hrs.)	Water Level (Ft. below TOC)	Flow (mL/Min.)	pH (S.U.)	S. Cond. (mS/cm)	Turb. (NTU)	DO (mg/L)	Temp. (Celcius)	ORP mV	Salinity % or ppt	Comments
0915	17.63	400								
0916	17.66	400	9.52	1.06	28	1.84	14.48	182	0.05	START PURGE
0920	17.68	400	7.55	0.780	500	1.29	13.69	178	0.03	CLEAR, NO ODOR
0925	17.68	400	6.96	0.697	180	1.56	13.70	163	0.03	REDDISH TAN
0930	17.68	400	6.50	0.614	110	1.87	13.85	144	0.03	LIGHT TAN
0935	17.68	400	6.32	0.560	55	2.11	13.79	137	0.02	LIGHT TAN
0940	17.66	400	6.23	0.511	38	2.24	13.81	134	0.02	LIGHT TAN
0945	17.67	400	6.15	0.457	31	2.39	13.89	132	0.02	LIGHT TAN
0950	17.67	400	6.10	0.428	18	2.50	13.89	134	0.02	LIGHT TAN
0955	17.67	400	6.05	0.400	12	2.57	13.80	135	0.02	CLEAR
1000	17.67	400	6.04	0.386	7.7	2.62	13.86	138	0.02	CLEAR
1005	17.66	400	6.03	0.374	7.7	2.68	13.90	138	0.01	CLEAR
1010	17.66	400	6.02	0.367	5.5	2.70	13.87	140	0.01	CLEAR
1015	17.66	400	6.02	0.357	5.5	2.72	13.91	141	0.01	CLEAR
1020	17.66	400	6.02	0.350	3.8	2.75	13.87	140	0.01	CLEAR
1025	17.67	400	6.02	0.345	5.0	2.75	13.97	140	0.01	CLEAR
1030	17.67	400	6.02	0.343	3.6	2.76	14.03	141	0.01	CLEAR
1040										SAMPLE COLLECTED

SIGNATURE(S): Donald Wheeler

PROJ_NO: 2192

SDG: T4162 MEDIA: WATER DATA FRACTION: OV

nsample	05-MW05-I
samp_date	8/10/2005
lab_id	T4162-09
qc_type	NM
units	UG/L
Pct_Solids	0.0
DUP_OF:	

Parameter	Result	Val Qual	Qual Code
1,1,1-TRICHLOROETHANE	0.16	U	
1,1,2,2-TETRACHLOROETHANE	0.09	U	
1,1,2-TRICHLOROETHANE	0.11	U	
1,1,2-TRICHLOROTRIFLUOROETHANE	0.13	U	
1,1-DICHLOROETHANE	0.17	U	
1,1-DICHLOROETHENE	2.4		
1,2,4-TRICHLOROBENZENE	0.08	U	
1,2-DIBROMO-3-CHLOROPROPANE	0.2	U	
1,2-DIBROMOETHANE	0.12	U	
1,2-DICHLOROBENZENE	0.08	U	
1,2-DICHLOROETHANE	0.13	U	
1,2-DICHLOROPROPANE	0.15	U	
1,3-DICHLOROBENZENE	0.1	U	
1,4-DICHLOROBENZENE	0.12	U	
2-BUTANONE	0.23	U	
2-HEXANONE	0.57	U	
4-METHYL-2-PENTANONE	0.46	U	
ACETONE	1.6	U	
BENZENE	0.15	U	
BROMODICHLOROMETHANE	0.14	U	
BROMOFORM	0.09	U	
BROMOMETHANE	0.18	U	
CARBON DISULFIDE	0.11	U	
CARBON TETRACHLORIDE	0.16	U	
CHLOROBENZENE	0.11	U	
CHLORODIBROMOMETHANE	0.13	U	
CHLOROETHANE	0.46	U	
CHLOROFORM	0.16	U	
CHLOROMETHANE	0.08	U	
CIS-1,2-DICHLOROETHENE	0.09	U	
CIS-1,3-DICHLOROPROPENE	0.12	U	
CYCLOHEXANE	0.15	U	

nsample	05-MW05-I
samp_date	8/10/2005
lab_id	T4162-09
qc_type	NM
units	UG/L
Pct_Solids	0.0
DUP_OF:	

Parameter	Result	Val Qual	Qual Code
DICHLORODIFLUOROMETHANE	0.12	U	
ETHYLBENZENE	0.11	U	
ISOPROPYLBENZENE	0.12	U	
M+P-XYLENES	0.24	UJ	C
METHYL ACETATE	0.16	UJ	C
METHYL CYCLOHEXANE	0.14	U	
METHYL TERT-BUTYL ETHER	0.22	U	
METHYLENE CHLORIDE	0.42	U	
O-XYLENE	0.13	U	
STYRENE	0.11	U	
TETRACHLOROETHENE	0.12	U	
TOLUENE	0.11	U	
TOTAL XYLENES	0.37	U	
TRANS-1,2-DICHLOROETHENE	0.1	U	
TRANS-1,3-DICHLOROPROPENE	0.1	U	
TRICHLOROETHENE	1	J	C
TRICHLOROFLUOROMETHANE	0.1	U	
VINYL CHLORIDE	0.09	U	

nsample	05-MW05-S
samp_date	8/10/2005
lab_id	T4162-10
qc_type	NM
units	UG/L
Pct_Solids	0.0
DUP_OF:	

Parameter	Result	Val Qual	Qual Code
1,1,1-TRICHLOROETHANE	0.16	U	
1,1,2,2-TETRACHLOROETHANE	0.09	U	
1,1,2-TRICHLOROETHANE	0.11	U	
1,1,2-TRICHLOROTRIFLUOROETHANE	0.13	U	
1,1-DICHLOROETHANE	0.17	U	
1,1-DICHLOROETHENE	0.19	U	
1,2,4-TRICHLOROBENZENE	0.08	U	
1,2-DIBROMO-3-CHLOROPROPANE	0.2	U	
1,2-DIBROMOETHANE	0.12	U	
1,2-DICHLOROBENZENE	0.08	U	
1,2-DICHLOROETHANE	0.13	U	
1,2-DICHLOROPROPANE	0.15	U	
1,3-DICHLOROBENZENE	0.1	U	
1,4-DICHLOROBENZENE	0.12	U	
2-BUTANONE	0.23	U	
2-HEXANONE	0.57	U	
4-METHYL-2-PENTANONE	0.46	U	
ACETONE	1.6	U	
BENZENE	0.15	U	
BROMODICHLOROMETHANE	0.14	U	
BROMOFORM	0.09	U	
BROMOMETHANE	0.18	U	
CARBON DISULFIDE	0.11	U	
CARBON TETRACHLORIDE	0.16	U	
CHLOROBENZENE	0.11	U	
CHLORODIBROMOMETHANE	0.13	U	
CHLOROETHANE	0.46	U	
CHLOROFORM	0.16	U	
CHLOROMETHANE	0.08	U	
CIS-1,2-DICHLOROETHENE	0.09	U	
CIS-1,3-DICHLOROPROPENE	0.12	U	
CYCLOHEXANE	0.15	U	

SDG: T4162 MEDIA: WATER DATA FRACTION: OV

nsample	05-MW05-S
samp_date	8/10/2005
lab_id	T4162-10
qc_type	NM
units	UG/L
Pct_Solids	0.0
DUP_OF:	

Parameter	Result	Val Qual	Qual Code
DICHLORODIFLUOROMETHANE	0.12	U	
ETHYLBENZENE	0.11	U	
ISOPROPYLBENZENE	0.12	U	
M+P-XYLENES	0.24	UJ	C
METHYL ACETATE	0.16	UJ	C
METHYL CYCLOHEXANE	0.14	U	
METHYL TERT-BUTYL ETHER	0.22	U	
METHYLENE CHLORIDE	0.42	U	
O-XYLENE	0.13	U	
STYRENE	0.11	U	
TETRACHLOROETHENE	0.12	U	
TOLUENE	0.11	U	
TOTAL XYLENES	0.37	U	
TRANS-1,2-DICHLOROETHENE	0.1	U	
TRANS-1,3-DICHLOROPROPENE	0.1	U	
TRICHLOROETHENE	0.12	U	
TRICHLOROFLUOROMETHANE	0.1	U	
VINYL CHLORIDE	0.09	U	

nsample	05-MW07-I
samp_date	8/9/2005
lab_id	T4162-03
qc_type	NM
units	UG/L
Pct_Solids	0.0
DUP_OF:	

Parameter	Result	Val Qual	Qual Code
1,1,1-TRICHLOROETHANE	0.16	U	
1,1,2,2-TETRACHLOROETHANE	0.09	U	
1,1,2-TRICHLOROETHANE	0.11	U	
1,1,2-TRICHLOROTRIFLUOROETHANE	0.13	U	
1,1-DICHLOROETHANE	0.17	U	
1,1-DICHLOROETHENE	3		
1,2,4-TRICHLOROBENZENE	0.08	U	
1,2-DIBROMO-3-CHLOROPROPANE	0.2	U	
1,2-DIBROMOETHANE	0.12	U	
1,2-DICHLOROBENZENE	0.08	U	
1,2-DICHLOROETHANE	0.13	U	
1,2-DICHLOROPROPANE	0.15	U	
1,3-DICHLOROBENZENE	0.1	U	
1,4-DICHLOROBENZENE	0.12	U	
2-BUTANONE	0.23	U	
2-HEXANONE	0.57	U	
4-METHYL-2-PENTANONE	0.46	U	
ACETONE	1.6	U	
BENZENE	0.15	U	
BROMODICHLOROMETHANE	0.14	U	
BROMOFORM	0.09	U	
BROMOMETHANE	0.18	U	
CARBON DISULFIDE	0.11	U	
CARBON TETRACHLORIDE	0.16	U	
CHLOROBENZENE	0.11	U	
CHLORODIBROMOMETHANE	0.13	U	
CHLOROETHANE	0.46	U	
CHLOROFORM	0.16	U	
CHLOROMETHANE	0.08	U	
CIS-1,2-DICHLOROETHENE	0.09	U	
CIS-1,3-DICHLOROPROPENE	0.12	U	
CYCLOHEXANE	0.15	U	

nsample	05-MW07-I
samp_date	8/9/2005
lab_id	T4162-03
qc_type	NM
units	UG/L
Pct_Solids	0.0
DUP_OF:	

Parameter	Result	Val Qual	Qual Code
DICHLORODIFLUOROMETHANE	0.12	U	
ETHYLBENZENE	0.11	U	
ISOPROPYLBENZENE	0.12	U	
M+P-XYLENES	0.24	UJ	C
METHYL ACETATE	0.16	UJ	C
METHYL CYCLOHEXANE	0.14	U	
METHYL TERT-BUTYL ETHER	0.22	U	
METHYLENE CHLORIDE	0.42	U	
O-XYLENE	0.13	U	
STYRENE	0.11	U	
TETRACHLOROETHENE	0.12	U	
TOLUENE	0.11	U	
TOTAL XYLENES	0.37	U	
TRANS-1,2-DICHLOROETHENE	0.1	U	
TRANS-1,3-DICHLOROPROPENE	0.1	U	
TRICHLOROETHENE	1.6	J	C
TRICHLOROFLUOROMETHANE	0.1	U	
VINYL CHLORIDE	0.09	U	

SDG: T4162 MEDIA: WATER DATA FRACTION: OV

nsample	05-MW07-S
samp_date	8/9/2005
lab_id	T4162-02
qc_type	NM
units	UG/L
Pct_Solids	0.0
DUP_OF:	

Parameter	Result	Val Qual	Qual Code
1,1,1-TRICHLOROETHANE	0.16	U	
1,1,2,2-TETRACHLOROETHANE	0.09	U	
1,1,2-TRICHLOROETHANE	0.11	U	
1,1,2-TRICHLOROTRIFLUOROETHANE	0.13	U	
1,1-DICHLOROETHANE	0.17	U	
1,1-DICHLOROETHENE	0.19	U	
1,2,4-TRICHLOROBENZENE	0.08	U	
1,2-DIBROMO-3-CHLOROPROPANE	0.2	U	
1,2-DIBROMOETHANE	0.12	U	
1,2-DICHLOROBENZENE	0.08	U	
1,2-DICHLOROETHANE	0.13	U	
1,2-DICHLOROPROPANE	0.15	U	
1,3-DICHLOROBENZENE	0.1	U	
1,4-DICHLOROBENZENE	0.12	U	
2-BUTANONE	0.23	U	
2-HEXANONE	0.57	U	
4-METHYL-2-PENTANONE	0.46	U	
ACETONE	1.6	U	
BENZENE	0.15	U	
BROMODICHLOROMETHANE	0.14	U	
BROMOFORM	0.09	U	
BROMOMETHANE	0.18	U	
CARBON DISULFIDE	0.11	U	
CARBON TETRACHLORIDE	0.16	U	
CHLOROBENZENE	0.11	U	
CHLORODIBROMOMETHANE	0.13	U	
CHLOROETHANE	0.46	U	
CHLOROFORM	0.16	U	
CHLOROMETHANE	0.08	U	
CIS-1,2-DICHLOROETHENE	0.09	U	
CIS-1,3-DICHLOROPROPENE	0.12	U	
CYCLOHEXANE	0.15	U	

nsample	05-MW07-S
samp_date	8/9/2005
lab_id	T4162-02
qc_type	NM
units	UG/L
Pct_Solids	0.0
DUP_OF:	

Parameter	Result	Val Qual	Qual Code
DICHLORODIFLUOROMETHANE	0.12	U	
ETHYLBENZENE	0.11	U	
ISOPROPYLBENZENE	0.12	U	
M+P-XYLENES	0.24	UJ	C
METHYL ACETATE	0.16	UJ	C
METHYL CYCLOHEXANE	0.14	U	
METHYL TERT-BUTYL ETHER	0.22	U	
METHYLENE CHLORIDE	0.42	U	
O-XYLENE	0.13	U	
STYRENE	0.11	U	
TETRACHLOROETHENE	0.12	U	
TOLUENE	0.11	U	
TOTAL XYLENES	0.37	U	
TRANS-1,2-DICHLOROETHENE	0.1	U	
TRANS-1,3-DICHLOROPROPENE	0.1	U	
TRICHLOROETHENE	0.12	U	
TRICHLOROFLUOROMETHANE	0.1	U	
VINYL CHLORIDE	0.09	U	

nsample	05-MW10-I
samp_date	8/9/2005
lab_id	T4162-05
qc_type	NM
units	UG/L
Pct_Solids	0.0
DUP_OF:	

Parameter	Result	Val Qual	Qual Code
1,1,1-TRICHLOROETHANE	2.7		
1,1,2,2-TETRACHLOROETHANE	0.09	U	
1,1,2-TRICHLOROETHANE	0.11	U	
1,1,2-TRICHLOROTRIFLUOROETHANE	0.13	U	
1,1-DICHLOROETHANE	0.17	U	
1,1-DICHLOROETHENE	4.6		
1,2,4-TRICHLOROBENZENE	0.08	U	
1,2-DIBROMO-3-CHLOROPROPANE	0.2	U	
1,2-DIBROMOETHANE	0.12	U	
1,2-DICHLOROBENZENE	0.08	U	
1,2-DICHLOROETHANE	0.13	U	
1,2-DICHLOROPROPANE	0.15	U	
1,3-DICHLOROBENZENE	0.1	U	
1,4-DICHLOROBENZENE	0.12	U	
2-BUTANONE	0.23	U	
2-HEXANONE	0.57	U	
4-METHYL-2-PENTANONE	0.46	U	
ACETONE	1.6	U	
BENZENE	0.15	U	
BROMODICHLOROMETHANE	0.14	U	
BROMOFORM	0.09	U	
BROMOMETHANE	0.18	U	
CARBON DISULFIDE	0.11	U	
CARBON TETRACHLORIDE	0.16	U	
CHLOROBENZENE	0.11	U	
CHLORODIBROMOMETHANE	0.13	U	
CHLOROETHANE	0.46	U	
CHLOROFORM	0.16	U	
CHLOROMETHANE	0.08	U	
CIS-1,2-DICHLOROETHENE	0.51	J	
CIS-1,3-DICHLOROPROPENE	0.12	U	
CYCLOHEXANE	0.15	U	

SDG: T4162 MEDIA: WATER DATA FRACTION: OV

nsample	05-MW10-I	nsample	05-MW10-S	nsample	05-MW10-S
samp_date	8/9/2005	samp_date	8/9/2005	samp_date	8/9/2005
lab_id	T4162-05	lab_id	T4162-08	lab_id	T4162-08
qc_type	NM	qc_type	NM	qc_type	NM
units	UG/L	units	UG/L	units	UG/L
Pct_Solids	0.0	Pct_Solids	0.0	Pct_Solids	0.0
DUP_OF:		DUP_OF:		DUP_OF:	

Parameter	Result	Val Qual	Qual Code
DICHLORODIFLUOROMETHANE	0.12	U	
ETHYLBENZENE	0.11	U	
ISOPROPYLBENZENE	0.12	U	
M+P-XYLENES	0.24	UJ	C
METHYL ACETATE	0.16	UJ	C
METHYL CYCLOHEXANE	0.14	U	
METHYL TERT-BUTYL ETHER	0.22	U	
METHYLENE CHLORIDE	0.42	U	
O-XYLENE	0.13	U	
STYRENE	0.11	U	
TETRACHLOROETHENE	0.12	U	
TOLUENE	0.11	U	
TOTAL XYLENES	0.37	U	
TRANS-1,2-DICHLOROETHENE	0.1	U	
TRANS-1,3-DICHLOROPROPENE	0.1	U	
TRICHLOROETHENE	2.3	J	C
TRICHLOROFLUOROMETHANE	0.1	U	
VINYL CHLORIDE	0.09	U	

Parameter	Result	Val Qual	Qual Code
1,1,1-TRICHLOROETHANE	22		
1,1,2,2-TETRACHLOROETHANE	0.09	U	
1,1,2-TRICHLOROETHANE	0.11	U	
1,1,2-TRICHLOROTRIFLUOROETHANE	0.13	U	
1,1-DICHLOROETHANE	11	J	C
1,1-DICHLOROETHENE	17		
1,2,4-TRICHLOROBENZENE	0.08	U	
1,2-DIBROMO-3-CHLOROPROPANE	0.2	U	
1,2-DIBROMOETHANE	0.12	U	
1,2-DICHLOROBENZENE	0.08	U	
1,2-DICHLOROETHANE	0.13	U	
1,2-DICHLOROPROPANE	0.15	U	
1,3-DICHLOROBENZENE	0.1	U	
1,4-DICHLOROBENZENE	0.12	U	
2-BUTANONE	0.23	U	
2-HEXANONE	0.57	U	
4-METHYL-2-PENTANONE	0.46	U	
ACETONE	1.6	U	
BENZENE	0.15	U	
BROMODICHLOROMETHANE	0.14	U	
BROMOFORM	0.09	U	
BROMOMETHANE	0.18	U	
CARBON DISULFIDE	0.11	U	
CARBON TETRACHLORIDE	0.16	U	
CHLOROBENZENE	0.11	U	
CHLORODIBROMOMETHANE	0.13	U	
CHLOROETHANE	0.46	U	
CHLOROFORM	0.16	U	
CHLOROMETHANE	0.08	U	
CIS-1,2-DICHLOROETHENE	1.3		
CIS-1,3-DICHLOROPROPENE	0.12	U	
CYCLOHEXANE	0.15	U	

Parameter	Result	Val Qual	Qual Code
DICHLORODIFLUOROMETHANE	0.12	U	
ETHYLBENZENE	0.11	U	
ISOPROPYLBENZENE	0.12	U	
M+P-XYLENES	0.24	UJ	C
METHYL ACETATE	0.16	UJ	C
METHYL CYCLOHEXANE	0.14	U	
METHYL TERT-BUTYL ETHER	0.22	U	
METHYLENE CHLORIDE	0.42	U	
O-XYLENE	0.13	U	
STYRENE	0.11	U	
TETRACHLOROETHENE	1.5		
TOLUENE	0.11	U	
TOTAL XYLENES	0.37	U	
TRANS-1,2-DICHLOROETHENE	0.1	U	
TRANS-1,3-DICHLOROPROPENE	0.1	U	
TRICHLOROETHENE	6.2	J	C
TRICHLOROFLUOROMETHANE	0.1	U	
VINYL CHLORIDE	0.09	U	

SDG: T4162 MEDIA: WATER DATA FRACTION: OV

nsample	05-MW10-SI
samp_date	8/9/2005
lab_id	T4162-04
qc_type	NM
units	UG/L
Pct_Solids	0.0
DUP_OF:	

Parameter	Result	Val Qual	Qual Code
1,1,2,2-TETRACHLOROETHANE	0.09	U	
1,1,2-TRICHLOROETHANE	2.6		
1,1,2-TRICHLOROTRIFLUOROETHANE	0.13	U	
1,2,4-TRICHLOROBENZENE	0.08	U	
1,2-DIBROMO-3-CHLOROPROPANE	0.2	U	
1,2-DIBROMOETHANE	0.12	U	
1,2-DICHLOROBENZENE	0.08	U	
1,2-DICHLOROETHANE	0.13	U	
1,2-DICHLOROPROPANE	0.15	U	
1,3-DICHLOROBENZENE	0.1	U	
1,4-DICHLOROBENZENE	0.12	U	
2-BUTANONE	0.23	U	
2-HEXANONE	0.57	U	
4-METHYL-2-PENTANONE	0.46	U	
ACETONE	1.6	U	
BENZENE	1.1		
BROMODICHLOROMETHANE	0.14	U	
BROMOFORM	0.09	U	
BROMOMETHANE	0.18	U	
CARBON DISULFIDE	0.11	U	
CARBON TETRACHLORIDE	0.16	U	
CHLOROBENZENE	0.11	U	
CHLORODIBROMOMETHANE	0.13	U	
CHLOROETHANE	0.46	U	
CHLOROFORM	0.16	U	
CHLOROMETHANE	0.08	U	
CIS-1,2-DICHLOROETHENE	14		
CIS-1,3-DICHLOROPROPENE	0.12	U	
CYCLOHEXANE	0.15	U	
DICHLORODIFLUOROMETHANE	0.12	U	
ETHYLBENZENE	0.11	U	
ISOPROPYLBENZENE	0.12	U	

nsample	05-MW10-SI
samp_date	8/9/2005
lab_id	T4162-04
qc_type	NM
units	UG/L
Pct_Solids	0.0
DUP_OF:	

Parameter	Result	Val Qual	Qual Code
M+P-XYLENES	0.24	UJ	C
METHYL ACETATE	0.16	UJ	C
METHYL CYCLOHEXANE	0.14	U	
METHYL TERT-BUTYL ETHER	0.22	U	
METHYLENE CHLORIDE	0.42	U	
O-XYLENE	0.13	U	
STYRENE	0.11	U	
TETRACHLOROETHENE	4		
TOLUENE	0.11	U	
TOTAL XYLENES	0.37	U	
TRANS-1,2-DICHLOROETHENE	0.1	U	
TRANS-1,3-DICHLOROPROPENE	0.1	U	
TRICHLOROFLUOROMETHANE	0.1	U	
VINYL CHLORIDE	0.09	U	

nsample	05-MW10-SIDL
samp_date	8/9/2005
lab_id	T4162-04DL
qc_type	NM
units	UG/L
Pct_Solids	0.0
DUP_OF:	

Parameter	Result	Val Qual	Qual Code
1,1,1-TRICHLOROETHANE	73		
1,1-DICHLOROETHANE	51		
1,1-DICHLOROETHENE	79		
TRICHLOROETHENE	52		

SDG: T4162 MEDIA: WATER DATA FRACTION: OV

nsample	FB-081005
samp_date	8/10/2005
lab_id	T4162-11
qc_type	NM
units	UG/L
Pct_Solids	0.0
DUP_OF:	

Parameter	Result	Val Qual	Qual Code
1,1,1-TRICHLOROETHANE	0.16	U	
1,1,2,2-TETRACHLOROETHANE	0.09	U	
1,1,2-TRICHLOROETHANE	0.11	U	
1,1,2-TRICHLOROTRIFLUOROETHANE	0.13	U	
1,1-DICHLOROETHANE	0.17	U	
1,1-DICHLOROETHENE	0.19	U	
1,2,4-TRICHLOROBENZENE	0.08	U	
1,2-DIBROMO-3-CHLOROPROPANE	0.2	U	
1,2-DIBROMOETHANE	0.12	U	
1,2-DICHLOROBENZENE	0.08	U	
1,2-DICHLOROETHANE	0.13	U	
1,2-DICHLOROPROPANE	0.15	U	
1,3-DICHLOROBENZENE	0.1	U	
1,4-DICHLOROBENZENE	0.12	U	
2-BUTANONE	0.23	U	
2-HEXANONE	0.57	U	
4-METHYL-2-PENTANONE	0.46	U	
ACETONE	1.6	U	
BENZENE	0.15	U	
BROMODICHLOROMETHANE	0.14	U	
BROMOFORM	0.09	U	
BROMOMETHANE	0.18	U	
CARBON DISULFIDE	0.11	U	
CARBON TETRACHLORIDE	0.16	U	
CHLOROBENZENE	0.11	U	
CHLORODIBROMOMETHANE	0.13	U	
CHLOROETHANE	0.46	U	
CHLOROFORM	0.16	U	
CHLOROMETHANE	0.08	U	
CIS-1,2-DICHLOROETHENE	0.09	U	
CIS-1,3-DICHLOROPROPENE	0.12	U	
CYCLOHEXANE	0.15	U	

nsample	FB-081005
samp_date	8/10/2005
lab_id	T4162-11
qc_type	NM
units	UG/L
Pct_Solids	0.0
DUP_OF:	

Parameter	Result	Val Qual	Qual Code
DICHLORODIFLUOROMETHANE	0.12	U	
ETHYLBENZENE	0.11	U	
ISOPROPYLBENZENE	0.12	U	
M+P-XYLENES	0.24	UJ	C
METHYL ACETATE	0.16	U	
METHYL CYCLOHEXANE	0.14	U	
METHYL TERT-BUTYL ETHER	0.22	U	
O-XYLENE	0.13	U	
STYRENE	0.11	U	
TETRACHLOROETHENE	0.12	U	
TOLUENE	0.11	U	
TOTAL XYLENES	0.37	U	
TRANS-1,2-DICHLOROETHENE	0.1	U	
TRANS-1,3-DICHLOROPROPENE	0.1	U	
TRICHLOROETHENE	0.12	U	
TRICHLOROFLUOROMETHANE	0.1	U	
VINYL CHLORIDE	0.09	U	

nsample	FB-081005DL
samp_date	8/10/2005
lab_id	T4162-11DL
qc_type	NM
units	UG/L
Pct_Solids	0.0
DUP_OF:	

Parameter	Result	Val Qual	Qual Code
METHYLENE CHLORIDE	34		

SDG: T4162 MEDIA: WATER DATA FRACTION: OV

nsample	TB-080905
samp_date	8/9/2005
lab_id	T4162-01
qc_type	NM
units	UG/L
Pct_Solids	0.0
DUP_OF:	

Parameter	Result	Val Qual	Qual Code
1,1,1-TRICHLOROETHANE	0.16	U	
1,1,2,2-TETRACHLOROETHANE	0.09	U	
1,1,2-TRICHLOROETHANE	0.11	U	
1,1,2-TRICHLOROTRIFLUOROETHANE	0.13	U	
1,1-DICHLOROETHANE	0.17	U	
1,1-DICHLOROETHENE	0.19	U	
1,2,4-TRICHLOROBENZENE	0.08	U	
1,2-DIBROMO-3-CHLOROPROPANE	0.2	U	
1,2-DIBROMOETHANE	0.12	U	
1,2-DICHLOROBENZENE	0.08	U	
1,2-DICHLOROETHANE	0.13	U	
1,2-DICHLOROPROPANE	0.15	U	
1,3-DICHLOROBENZENE	0.1	U	
1,4-DICHLOROBENZENE	0.12	U	
2-BUTANONE	0.23	U	
2-HEXANONE	0.57	U	
4-METHYL-2-PENTANONE	0.46	U	
ACETONE	1.6	U	
BENZENE	0.15	U	
BROMODICHLOROMETHANE	0.14	U	
BROMOFORM	0.09	U	
BROMOMETHANE	0.18	U	
CARBON DISULFIDE	0.11	U	
CARBON TETRACHLORIDE	0.16	U	
CHLOROBENZENE	0.11	U	
CHLORODIBROMOMETHANE	0.13	U	
CHLOROETHANE	0.46	U	
CHLOROFORM	0.16	U	
CHLOROMETHANE	0.08	U	
CIS-1,2-DICHLOROETHENE	0.09	U	
CIS-1,3-DICHLOROPROPENE	0.12	U	
CYCLOHEXANE	0.15	U	

nsample	TB-080905
samp_date	8/9/2005
lab_id	T4162-01
qc_type	NM
units	UG/L
Pct_Solids	0.0
DUP_OF:	

Parameter	Result	Val Qual	Qual Code
DICHLORODIFLUOROMETHANE	0.12	U	
ETHYLBENZENE	0.11	U	
ISOPROPYLBENZENE	0.12	U	
M+P-XYLENES	0.24	UJ	C
METHYL ACETATE	0.16	U	
METHYL CYCLOHEXANE	0.14	U	
METHYL TERT-BUTYL ETHER	0.22	U	
METHYLENE CHLORIDE	2.3		
O-XYLENE	0.13	U	
STYRENE	0.11	U	
TETRACHLOROETHENE	0.12	U	
TOLUENE	0.11	U	
TOTAL XYLENES	0.37	U	
TRANS-1,2-DICHLOROETHENE	0.1	U	
TRANS-1,3-DICHLOROPROPENE	0.1	U	
TRICHLOROETHENE	0.12	U	
TRICHLOROFLUOROMETHANE	0.1	U	
VINYL CHLORIDE	0.09	U	

PROJ_NO: 2192

SDG: T4162 MEDIA: WATER DATA FRACTION: OS

nsample	05-MW05-I
samp_date	8/10/2005
lab_id	T4162-09
qc_type	NM
units	UG/L
Pct_Solids	0.0
DUP_OF:	

Parameter	Result	Val Qual	Qual Code
1,4-DIOXANE	2.1	U	

nsample	05-MW05-S
samp_date	8/10/2005
lab_id	T4162-10
qc_type	NM
units	UG/L
Pct_Solids	0.0
DUP_OF:	

Parameter	Result	Val Qual	Qual Code
1,4-DIOXANE	2.1	U	

nsample	05-MW07-I
samp_date	8/9/2005
lab_id	T4162-03
qc_type	NM
units	UG/L
Pct_Solids	0.0
DUP_OF:	

Parameter	Result	Val Qual	Qual Code
1,4-DIOXANE	2.1	U	

SDG: T4162 MEDIA: WATER DATA FRACTION: OS

nsample	05-MW07-S
samp_date	8/9/2005
lab_id	T4162-02
qc_type	NM
units	UG/L
Pct_Solids	0.0
DUP_OF:	

Parameter	Result	Val Qual	Qual Code
1,4-DIOXANE	2.1	U	

nsample	05-MW10-I
samp_date	8/9/2005
lab_id	T4162-05
qc_type	NM
units	UG/L
Pct_Solids	0.0
DUP_OF:	

Parameter	Result	Val Qual	Qual Code
1,4-DIOXANE	2	U	

nsample	05-MW10-S
samp_date	8/9/2005
lab_id	T4162-08
qc_type	NM
units	UG/L
Pct_Solids	0.0
DUP_OF:	

Parameter	Result	Val Qual	Qual Code
1,4-DIOXANE	2.1	U	

SDG: T4162 MEDIA: WATER DATA FRACTION: OS

nsample	05-MW10-SI	nsample	FB-081005
samp_date	8/9/2005	samp_date	8/10/2005
lab_id	T4162-04	lab_id	T4162-11
qc_type	NM	qc_type	NM
units	UG/L	units	UG/L
Pct_Solids	0.0	Pct_Solids	0.0
DUP_OF:		DUP_OF:	

Parameter	Result	Val Qual	Qual Code
1,4-DIOXANE	2.1	U	

Parameter	Result	Val Qual	Qual Code
1,4-DIOXANE	2.1	U	

PROJ_NO: 2192

SDG: T4189 MEDIA: WATER DATA FRACTION: OV

nsample	05-MW06-I
samp_date	8/12/2005
lab_id	T4189-05
qc_type	NM
units	UG/L
Pct_Solids	0.0
DUP_OF:	

Parameter	Result	Val Qual	Qual Code
1,1,1-TRICHLOROETHANE	0.16	U	
1,1,2,2-TETRACHLOROETHANE	0.09	U	
1,1,2-TRICHLOROETHANE	0.11	U	
1,1,2-TRICHLOROTRIFLUOROETHANE	0.13	U	
1,1-DICHLOROETHANE	0.17	U	
1,1-DICHLOROETHENE	0.19	U	
1,2,4-TRICHLOROBENZENE	0.08	U	
1,2-DIBROMO-3-CHLOROPROPANE	0.2	U	
1,2-DIBROMOETHANE	0.12	U	
1,2-DICHLOROBENZENE	0.08	U	
1,2-DICHLOROETHANE	0.13	U	
1,2-DICHLOROPROPANE	0.15	U	
1,3-DICHLOROBENZENE	0.1	U	
1,4-DICHLOROBENZENE	0.12	U	
2-BUTANONE	0.23	U	
2-HEXANONE	0.57	U	
4-METHYL-2-PENTANONE	0.46	U	
ACETONE	1.6	R	C
BENZENE	0.15	U	
BROMODICHLOROMETHANE	0.14	U	
BROMOFORM	0.09	U	
BROMOMETHANE	0.18	U	
CARBON DISULFIDE	0.11	U	
CARBON TETRACHLORIDE	0.16	U	
CHLOROBENZENE	0.11	U	
CHLORODIBROMOMETHANE	0.13	U	
CHLOROETHANE	0.46	U	
CHLOROFORM	0.16	U	
CHLOROMETHANE	0.08	U	
CIS-1,2-DICHLOROETHENE	0.09	U	
CIS-1,3-DICHLOROPROPENE	0.12	U	
CYCLOHEXANE	0.15	U	

nsample	05-MW06-I
samp_date	8/12/2005
lab_id	T4189-05
qc_type	NM
units	UG/L
Pct_Solids	0.0
DUP_OF:	

Parameter	Result	Val Qual	Qual Code
DICHLORODIFLUOROMETHANE	0.12	U	
ETHYLBENZENE	0.11	U	
ISOPROPYLBENZENE	0.12	U	
M+P-XYLENES	0.24	U	
METHYL ACETATE	0.16	U	
METHYL CYCLOHEXANE	0.14	U	
METHYL TERT-BUTYL ETHER	0.22	U	
METHYLENE CHLORIDE	0.42	U	
O-XYLENE	0.13	U	
STYRENE	0.11	U	
TETRACHLOROETHENE	0.12	U	
TOLUENE	0.11	U	
TOTAL XYLENES	0.37	U	
TRANS-1,2-DICHLOROETHENE	0.1	U	
TRANS-1,3-DICHLOROPROPENE	0.1	U	
TRICHLOROETHENE	0.12	U	
TRICHLOROFLUOROMETHANE	0.1	U	
VINYL CHLORIDE	0.09	U	

nsample	05-MW06-S
samp_date	8/12/2005
lab_id	T4189-06
qc_type	NM
units	UG/L
Pct_Solids	0.0
DUP_OF:	

Parameter	Result	Val Qual	Qual Code
1,1,1-TRICHLOROETHANE	0.16	U	
1,1,2,2-TETRACHLOROETHANE	0.09	U	
1,1,2-TRICHLOROETHANE	0.11	U	
1,1,2-TRICHLOROTRIFLUOROETHANE	0.13	U	
1,1-DICHLOROETHANE	0.17	U	
1,1-DICHLOROETHENE	0.19	U	
1,2,4-TRICHLOROBENZENE	0.08	U	
1,2-DIBROMO-3-CHLOROPROPANE	0.2	U	
1,2-DIBROMOETHANE	0.12	U	
1,2-DICHLOROBENZENE	0.08	U	
1,2-DICHLOROETHANE	0.13	U	
1,2-DICHLOROPROPANE	0.15	U	
1,3-DICHLOROBENZENE	0.1	U	
1,4-DICHLOROBENZENE	0.12	U	
2-BUTANONE	0.23	U	
2-HEXANONE	0.57	U	
4-METHYL-2-PENTANONE	0.46	U	
ACETONE	1.6	R	C
BENZENE	0.15	U	
BROMODICHLOROMETHANE	0.14	U	
BROMOFORM	0.09	U	
BROMOMETHANE	0.18	U	
CARBON DISULFIDE	0.11	U	
CARBON TETRACHLORIDE	0.16	U	
CHLOROBENZENE	0.11	U	
CHLORODIBROMOMETHANE	0.13	U	
CHLOROETHANE	0.46	U	
CHLOROFORM	0.16	U	
CHLOROMETHANE	0.08	U	
CIS-1,2-DICHLOROETHENE	0.09	U	
CIS-1,3-DICHLOROPROPENE	0.12	U	
CYCLOHEXANE	0.15	U	

PROJ_NO: 2192

SDG: T4189 MEDIA: WATER DATA FRACTION: OV

nsample	05-MW06-S
samp_date	8/12/2005
lab_id	T4189-06
qc_type	NM
units	UG/L
Pct_Solids	0.0
DUP_OF:	

Parameter	Result	Val Qual	Qual Code
DICHLORODIFLUOROMETHANE	0.12	U	
ETHYLBENZENE	0.11	U	
ISOPROPYLBENZENE	0.12	U	
M+P-XYLENES	0.24	U	
METHYL ACETATE	0.16	U	
METHYL CYCLOHEXANE	0.14	U	
METHYL TERT-BUTYL ETHER	0.22	U	
METHYLENE CHLORIDE	0.42	U	
O-XYLENE	0.13	U	
STYRENE	0.11	U	
TETRACHLOROETHENE	0.77	J	
TOLUENE	0.11	U	
TOTAL XYLENES	0.37	U	
TRANS-1,2-DICHLOROETHENE	0.1	U	
TRANS-1,3-DICHLOROPROPENE	0.1	U	
TRICHLOROETHENE	0.12	U	
TRICHLOROFLUOROMETHANE	0.1	U	
VINYL CHLORIDE	0.09	U	

nsample	05-MW08-S
samp_date	8/12/2005
lab_id	T4189-08
qc_type	NM
units	UG/L
Pct_Solids	0.0
DUP_OF:	

Parameter	Result	Val Qual	Qual Code
1,1,1-TRICHLOROETHANE	0.16	U	
1,1,2,2-TETRACHLOROETHANE	0.09	U	
1,1,2-TRICHLOROETHANE	0.11	U	
1,1,2-TRICHLOROTRIFLUOROETHANE	0.13	U	
1,1-DICHLOROETHANE	0.17	U	
1,1-DICHLOROETHENE	0.19	U	
1,2,4-TRICHLOROBENZENE	0.08	U	
1,2-DIBROMO-3-CHLOROPROPANE	0.2	U	
1,2-DIBROMOETHANE	0.12	U	
1,2-DICHLOROBENZENE	0.08	U	
1,2-DICHLOROETHANE	0.13	U	
1,2-DICHLOROPROPANE	0.15	U	
1,3-DICHLOROBENZENE	0.1	U	
1,4-DICHLOROBENZENE	0.12	U	
2-BUTANONE	0.23	U	
2-HEXANONE	0.57	U	
4-METHYL-2-PENTANONE	0.46	U	
ACETONE	1.6	R	C
BENZENE	0.15	U	
BROMODICHLOROMETHANE	0.14	U	
BROMOFORM	0.09	U	
BROMOMETHANE	0.18	U	
CARBON DISULFIDE	0.11	U	
CARBON TETRACHLORIDE	0.16	U	
CHLOROBENZENE	0.11	U	
CHLORODIBROMOMETHANE	0.13	U	
CHLOROETHANE	0.46	U	
CHLOROFORM	0.16	U	
CHLOROMETHANE	0.08	U	
CIS-1,2-DICHLOROETHENE	0.09	U	
CIS-1,3-DICHLOROPROPENE	0.12	U	
CYCLOHEXANE	0.15	U	

nsample	05-MW08-S
samp_date	8/12/2005
lab_id	T4189-08
qc_type	NM
units	UG/L
Pct_Solids	0.0
DUP_OF:	

Parameter	Result	Val Qual	Qual Code
DICHLORODIFLUOROMETHANE	0.12	U	
ETHYLBENZENE	0.11	U	
ISOPROPYLBENZENE	0.12	U	
M+P-XYLENES	0.24	U	
METHYL ACETATE	0.16	U	
METHYL CYCLOHEXANE	0.14	U	
METHYL TERT-BUTYL ETHER	0.22	U	
METHYLENE CHLORIDE	0.42	U	
O-XYLENE	0.13	U	
STYRENE	0.11	U	
TETRACHLOROETHENE	0.12	U	
TOLUENE	0.11	U	
TOTAL XYLENES	0.37	U	
TRANS-1,2-DICHLOROETHENE	0.1	U	
TRANS-1,3-DICHLOROPROPENE	0.1	U	
TRICHLOROETHENE	0.12	U	
TRICHLOROFLUOROMETHANE	0.1	U	
VINYL CHLORIDE	0.09	U	

SDG: T4189 MEDIA: WATER DATA FRACTION: OV

nsample	05-MW08-SI
samp_date	8/12/2005
lab_id	T4189-07
qc_type	NM
units	UG/L
Pct_Solids	0.0
DUP_OF:	DUP-01

Parameter	Result	Val Qual	Qual Code
1,1,1-TRICHLOROETHANE	0.16	U	
1,1,2,2-TETRACHLOROETHANE	0.09	U	
1,1,2-TRICHLOROETHANE	0.11	U	
1,1,2-TRICHLOROTRIFLUOROETHANE	0.13	U	
1,1-DICHLOROETHANE	0.17	U	
1,1-DICHLOROETHENE	0.19	U	
1,2,4-TRICHLOROBENZENE	0.08	U	
1,2-DIBROMO-3-CHLOROPROPANE	0.2	U	
1,2-DIBROMOETHANE	0.12	U	
1,2-DICHLOROBENZENE	0.08	U	
1,2-DICHLOROETHANE	0.13	U	
1,2-DICHLOROPROPANE	0.15	U	
1,3-DICHLOROBENZENE	0.1	U	
1,4-DICHLOROBENZENE	0.12	U	
2-BUTANONE	0.23	U	
2-HEXANONE	0.57	U	
4-METHYL-2-PENTANONE	0.46	U	
ACETONE	1.6	R	C
BENZENE	0.15	U	
BROMODICHLOROMETHANE	0.14	U	
BROMOFORM	0.09	U	
BROMOMETHANE	0.18	U	
CARBON DISULFIDE	0.11	U	
CARBON TETRACHLORIDE	0.16	U	
CHLOROBENZENE	0.11	U	
CHLORODIBROMOMETHANE	0.13	U	
CHLOROETHANE	0.46	U	
CHLOROFORM	0.16	U	
CHLOROMETHANE	0.08	U	
CIS-1,2-DICHLOROETHENE	0.09	U	
CIS-1,3-DICHLOROPROPENE	0.12	U	
CYCLOHEXANE	0.15	U	

nsample	05-MW08-SI
samp_date	8/12/2005
lab_id	T4189-07
qc_type	NM
units	UG/L
Pct_Solids	0.0
DUP_OF:	DUP-01

Parameter	Result	Val Qual	Qual Code
DICHLORODIFLUOROMETHANE	0.12	U	
ETHYLBENZENE	0.11	U	
ISOPROPYLBENZENE	0.12	U	
M+P-XYLENES	0.24	U	
METHYL ACETATE	0.16	U	
METHYL CYCLOHEXANE	0.14	U	
METHYL TERT-BUTYL ETHER	0.22	U	
METHYLENE CHLORIDE	0.42	U	
O-XYLENE	0.13	U	
STYRENE	0.11	U	
TETRACHLOROETHENE	0.12	U	
TOLUENE	0.11	U	
TOTAL XYLENES	0.37	U	
TRANS-1,2-DICHLOROETHENE	0.1	U	
TRANS-1,3-DICHLOROPROPENE	0.1	U	
TRICHLOROETHENE	0.12	U	
TRICHLOROFLUOROMETHANE	0.1	U	
VINYL CHLORIDE	0.09	U	

nsample	05-MW11-D
samp_date	8/11/2005
lab_id	T4189-02
qc_type	NM
units	UG/L
Pct_Solids	0.0
DUP_OF:	

Parameter	Result	Val Qual	Qual Code
1,1,1-TRICHLOROETHANE	0.16	U	
1,1,2,2-TETRACHLOROETHANE	0.09	U	
1,1,2-TRICHLOROETHANE	0.11	U	
1,1,2-TRICHLOROTRIFLUOROETHANE	0.13	U	
1,1-DICHLOROETHANE	0.17	U	
1,1-DICHLOROETHENE	0.19	U	
1,2,4-TRICHLOROBENZENE	0.08	U	
1,2-DIBROMO-3-CHLOROPROPANE	0.2	U	
1,2-DIBROMOETHANE	0.12	U	
1,2-DICHLOROBENZENE	0.08	U	
1,2-DICHLOROETHANE	0.13	U	
1,2-DICHLOROPROPANE	0.15	U	
1,3-DICHLOROBENZENE	0.1	U	
1,4-DICHLOROBENZENE	0.12	U	
2-BUTANONE	0.23	U	
2-HEXANONE	0.57	U	
4-METHYL-2-PENTANONE	0.46	U	
ACETONE	1.6	R	C
BENZENE	0.15	U	
BROMODICHLOROMETHANE	0.14	U	
BROMOFORM	0.09	U	
BROMOMETHANE	0.18	U	
CARBON DISULFIDE	0.11	U	
CARBON TETRACHLORIDE	0.16	U	
CHLOROBENZENE	0.11	U	
CHLORODIBROMOMETHANE	0.13	U	
CHLOROETHANE	0.46	U	
CHLOROFORM	0.16	U	
CHLOROMETHANE	0.08	U	
CIS-1,2-DICHLOROETHENE	0.09	U	
CIS-1,3-DICHLOROPROPENE	0.12	U	
CYCLOHEXANE	0.15	U	

SDG: T4189 MEDIA: WATER DATA FRACTION: OV

nsample	05-MW11-D
samp_date	8/11/2005
lab_id	T4189-02
qc_type	NM
units	UG/L
Pct_Solids	0.0
DUP_OF:	

Parameter	Result	Val Qual	Qual Code
DICHLORODIFLUOROMETHANE	0.12	U	
ETHYLBENZENE	0.11	U	
ISOPROPYLBENZENE	0.12	U	
M+P-XYLENES	0.24	U	
METHYL ACETATE	0.16	U	
METHYL CYCLOHEXANE	0.14	U	
METHYL TERT-BUTYL ETHER	0.22	U	
METHYLENE CHLORIDE	0.42	U	
O-XYLENE	0.13	U	
STYRENE	0.11	U	
TETRACHLOROETHENE	0.12	U	
TOLUENE	0.11	U	
TOTAL XYLENES	0.37	U	
TRANS-1,2-DICHLOROETHENE	0.1	U	
TRANS-1,3-DICHLOROPROPENE	0.1	U	
TRICHLOROETHENE	0.12	U	
TRICHLOROFLUOROMETHANE	0.1	U	
VINYL CHLORIDE	0.09	U	

nsample	05-MW11-I
samp_date	8/11/2005
lab_id	T4189-03
qc_type	NM
units	UG/L
Pct_Solids	0.0
DUP_OF:	

Parameter	Result	Val Qual	Qual Code
1,1,1-TRICHLOROETHANE	0.16	U	
1,1,2,2-TETRACHLOROETHANE	0.09	U	
1,1,2-TRICHLOROETHANE	0.11	U	
1,1,2-TRICHLOROTRIFLUOROETHANE	0.13	U	
1,1-DICHLOROETHANE	0.17	U	
1,1-DICHLOROETHENE	0.19	U	
1,2,4-TRICHLOROBENZENE	0.08	U	
1,2-DIBROMO-3-CHLOROPROPANE	0.2	U	
1,2-DIBROMOETHANE	0.12	U	
1,2-DICHLOROBENZENE	0.08	U	
1,2-DICHLOROETHANE	0.13	U	
1,2-DICHLOROPROPANE	0.15	U	
1,3-DICHLOROBENZENE	0.1	U	
1,4-DICHLOROBENZENE	0.12	U	
2-BUTANONE	0.23	U	
2-HEXANONE	0.57	U	
4-METHYL-2-PENTANONE	0.46	U	
ACETONE	1.6	R	C
BENZENE	0.15	U	
BROMODICHLOROMETHANE	0.14	U	
BROMOFORM	0.09	U	
BROMOMETHANE	0.18	U	
CARBON DISULFIDE	0.11	U	
CARBON TETRACHLORIDE	0.16	U	
CHLOROBENZENE	0.11	U	
CHLORODIBROMOMETHANE	0.13	U	
CHLOROETHANE	0.46	U	
CHLOROFORM	0.16	U	
CHLOROMETHANE	0.08	U	
CIS-1,2-DICHLOROETHENE	0.09	U	
CIS-1,3-DICHLOROPROPENE	0.12	U	
CYCLOHEXANE	0.15	U	

nsample	05-MW11-I
samp_date	8/11/2005
lab_id	T4189-03
qc_type	NM
units	UG/L
Pct_Solids	0.0
DUP_OF:	

Parameter	Result	Val Qual	Qual Code
DICHLORODIFLUOROMETHANE	0.12	U	
ETHYLBENZENE	0.11	U	
ISOPROPYLBENZENE	0.12	U	
M+P-XYLENES	0.24	U	
METHYL ACETATE	0.16	U	
METHYL CYCLOHEXANE	0.14	U	
METHYL TERT-BUTYL ETHER	0.22	U	
METHYLENE CHLORIDE	0.42	U	
O-XYLENE	0.13	U	
STYRENE	0.11	U	
TETRACHLOROETHENE	0.12	U	
TOLUENE	0.11	U	
TOTAL XYLENES	0.37	U	
TRANS-1,2-DICHLOROETHENE	0.1	U	
TRANS-1,3-DICHLOROPROPENE	0.1	U	
TRICHLOROETHENE	0.12	U	
TRICHLOROFLUOROMETHANE	0.1	U	
VINYL CHLORIDE	0.09	U	

SDG: T4189 MEDIA: WATER DATA FRACTION: OV

nsample	05-MW11-S
samp_date	8/11/2005
lab_id	T4189-04
qc_type	NM
units	UG/L
Pct_Solids	0.0
DUP_OF:	

Parameter	Result	Val Qual	Qual Code
1,1,1-TRICHLOROETHANE	0.16	U	
1,1,2,2-TETRACHLOROETHANE	0.09	U	
1,1,2-TRICHLOROETHANE	0.11	U	
1,1,2-TRICHLOROTRIFLUOROETHANE	0.13	U	
1,1-DICHLOROETHANE	0.17	U	
1,1-DICHLOROETHENE	0.19	U	
1,2,4-TRICHLOROBENZENE	0.08	U	
1,2-DIBROMO-3-CHLOROPROPANE	0.2	U	
1,2-DIBROMOETHANE	0.12	U	
1,2-DICHLOROBENZENE	0.08	U	
1,2-DICHLOROETHANE	0.13	U	
1,2-DICHLOROPROPANE	0.15	U	
1,3-DICHLOROBENZENE	0.1	U	
1,4-DICHLOROBENZENE	0.12	U	
2-BUTANONE	0.23	U	
2-HEXANONE	0.57	U	
4-METHYL-2-PENTANONE	0.46	U	
ACETONE	1.6	R	C
BENZENE	0.15	U	
BROMODICHLOROMETHANE	0.14	U	
BROMOFORM	0.09	U	
BROMOMETHANE	0.18	U	
CARBON DISULFIDE	0.11	U	
CARBON TETRACHLORIDE	0.16	U	
CHLOROBENZENE	0.11	U	
CHLORODIBROMOMETHANE	0.13	U	
CHLOROETHANE	0.46	U	
CHLOROFORM	0.16	U	
CHLOROMETHANE	0.08	U	
CIS-1,2-DICHLOROETHENE	0.09	U	
CIS-1,3-DICHLOROPROPENE	0.12	U	
CYCLOHEXANE	0.15	U	

nsample	05-MW11-S
samp_date	8/11/2005
lab_id	T4189-04
qc_type	NM
units	UG/L
Pct_Solids	0.0
DUP_OF:	

Parameter	Result	Val Qual	Qual Code
DICHLORODIFLUOROMETHANE	0.12	U	
ETHYLBENZENE	0.11	U	
ISOPROPYLBENZENE	0.12	U	
M+P-XYLENES	0.24	U	
METHYL ACETATE	0.16	U	
METHYL CYCLOHEXANE	0.14	U	
METHYL TERT-BUTYL ETHER	0.22	U	
METHYLENE CHLORIDE	0.42	U	
O-XYLENE	0.13	U	
STYRENE	0.11	U	
TETRACHLOROETHENE	0.12	U	
TOLUENE	0.11	U	
TOTAL XYLENES	0.37	U	
TRANS-1,2-DICHLOROETHENE	0.1	U	
TRANS-1,3-DICHLOROPROPENE	0.1	U	
TRICHLOROETHENE	0.12	U	
TRICHLOROFLUOROMETHANE	0.1	U	
VINYL CHLORIDE	0.09	U	

nsample	DUP-01
samp_date	8/12/2005
lab_id	T4189-10
qc_type	NM
units	UG/L
Pct_Solids	0.0
DUP_OF:	05-MW08-SI

Parameter	Result	Val Qual	Qual Code
1,1,1-TRICHLOROETHANE	0.16	U	
1,1,2,2-TETRACHLOROETHANE	0.09	U	
1,1,2-TRICHLOROETHANE	0.11	U	
1,1,2-TRICHLOROTRIFLUOROETHANE	0.13	U	
1,1-DICHLOROETHANE	0.17	U	
1,1-DICHLOROETHENE	0.19	U	
1,2,4-TRICHLOROBENZENE	0.08	U	
1,2-DIBROMO-3-CHLOROPROPANE	0.2	U	
1,2-DIBROMOETHANE	0.12	U	
1,2-DICHLOROBENZENE	0.08	U	
1,2-DICHLOROETHANE	0.13	U	
1,2-DICHLOROPROPANE	0.15	U	
1,3-DICHLOROBENZENE	0.1	U	
1,4-DICHLOROBENZENE	0.12	U	
2-BUTANONE	0.23	U	
2-HEXANONE	0.57	U	
4-METHYL-2-PENTANONE	0.46	U	
ACETONE	1.6	R	C
BENZENE	0.15	U	
BROMODICHLOROMETHANE	0.14	U	
BROMOFORM	0.09	U	
BROMOMETHANE	0.18	U	
CARBON DISULFIDE	0.11	U	
CARBON TETRACHLORIDE	0.16	U	
CHLOROBENZENE	0.11	U	
CHLORODIBROMOMETHANE	0.13	U	
CHLOROETHANE	0.46	U	
CHLOROFORM	0.16	U	
CHLOROMETHANE	0.08	U	
CIS-1,2-DICHLOROETHENE	0.09	U	
CIS-1,3-DICHLOROPROPENE	0.12	U	
CYCLOHEXANE	0.15	U	

PROJ_NO: 2192

SDG: T4189 MEDIA: WATER DATA FRACTION: OV

nsample	DUP-01
samp_date	8/12/2005
lab_id	T4189-10
qc_type	NM
units	UG/L
Pct_Solids	0.0
DUP_OF:	05-MW08-SI

Parameter	Result	Val Qual	Qual Code
DICHLORODIFLUOROMETHANE	0.12	U	
ETHYLBENZENE	0.11	U	
ISOPROPYLBENZENE	0.12	U	
M+P-XYLENES	0.24	U	
METHYL ACETATE	0.16	U	
METHYL CYCLOHEXANE	0.14	U	
METHYL TERT-BUTYL ETHER	0.22	U	
METHYLENE CHLORIDE	0.42	U	
O-XYLENE	0.13	U	
STYRENE	0.11	U	
TETRACHLOROETHENE	0.12	U	
TOLUENE	0.11	U	
TOTAL XYLENES	0.37	U	
TRANS-1,2-DICHLOROETHENE	0.1	U	
TRANS-1,3-DICHLOROPROPENE	0.1	U	
TRICHLOROETHENE	0.12	U	
TRICHLOROFLUOROMETHANE	0.1	U	
VINYL CHLORIDE	0.09	U	

nsample	RB-081205
samp_date	8/12/2005
lab_id	T4189-09
qc_type	NM
units	UG/L
Pct_Solids	0.0
DUP_OF:	

Parameter	Result	Val Qual	Qual Code
1,1,1-TRICHLOROETHANE	0.16	U	
1,1,2,2-TETRACHLOROETHANE	0.09	U	
1,1,2-TRICHLOROETHANE	0.11	U	
1,1,2-TRICHLOROTRIFLUOROETHANE	0.13	U	
1,1-DICHLOROETHANE	0.17	U	
1,1-DICHLOROETHENE	0.19	U	
1,2,4-TRICHLOROBENZENE	0.08	U	
1,2-DIBROMO-3-CHLOROPROPANE	0.2	U	
1,2-DIBROMOETHANE	0.12	U	
1,2-DICHLOROBENZENE	0.08	U	
1,2-DICHLOROETHANE	0.13	U	
1,2-DICHLOROPROPANE	0.15	U	
1,3-DICHLOROBENZENE	0.1	U	
1,4-DICHLOROBENZENE	0.12	U	
2-BUTANONE	0.23	U	
2-HEXANONE	0.57	U	
4-METHYL-2-PENTANONE	0.46	U	
ACETONE	1.6	R	C
BENZENE	0.15	U	
BROMODICHLOROMETHANE	0.14	U	
BROMOFORM	0.09	U	
BROMOMETHANE	0.18	U	
CARBON DISULFIDE	0.11	U	
CARBON TETRACHLORIDE	0.16	U	
CHLOROBENZENE	0.11	U	
CHLORODIBROMOMETHANE	0.13	U	
CHLOROETHANE	0.46	U	
CHLOROFORM	0.16	U	
CHLOROMETHANE	0.08	U	
CIS-1,2-DICHLOROETHENE	0.09	U	
CIS-1,3-DICHLOROPROPENE	0.12	U	
CYCLOHEXANE	0.15	U	

nsample	RB-081205
samp_date	8/12/2005
lab_id	T4189-09
qc_type	NM
units	UG/L
Pct_Solids	0.0
DUP_OF:	

Parameter	Result	Val Qual	Qual Code
DICHLORODIFLUOROMETHANE	0.12	U	
ETHYLBENZENE	0.11	U	
ISOPROPYLBENZENE	0.12	U	
M+P-XYLENES	0.24	U	
METHYL ACETATE	0.16	U	
METHYL CYCLOHEXANE	0.14	U	
METHYL TERT-BUTYL ETHER	0.22	U	
METHYLENE CHLORIDE	30		
O-XYLENE	0.13	U	
STYRENE	0.11	U	
TETRACHLOROETHENE	0.12	U	
TOLUENE	0.11	U	
TOTAL XYLENES	0.37	U	
TRANS-1,2-DICHLOROETHENE	0.1	U	
TRANS-1,3-DICHLOROPROPENE	0.1	U	
TRICHLOROETHENE	0.12	U	
TRICHLOROFLUOROMETHANE	0.1	U	
VINYL CHLORIDE	0.09	U	

SDG: T4189 MEDIA: WATER DATA FRACTION: OV

nsample	TB-081105
samp_date	8/11/2005
lab_id	T4189-01
qc_type	NM
units	UG/L
Pct_Solids	0.0
DUP_OF:	

Parameter	Result	Val Qual	Qual Code
1,1,1-TRICHLOROETHANE	0.16	U	
1,1,2,2-TETRACHLOROETHANE	0.09	U	
1,1,2-TRICHLOROETHANE	0.11	U	
1,1,2-TRICHLOROTRIFLUOROETHANE	0.13	U	
1,1-DICHLOROETHANE	0.17	U	
1,1-DICHLOROETHENE	0.19	U	
1,2,4-TRICHLOROBENZENE	0.08	U	
1,2-DIBROMO-3-CHLOROPROPANE	0.2	U	
1,2-DIBROMOETHANE	0.12	U	
1,2-DICHLOROBENZENE	0.08	U	
1,2-DICHLOROETHANE	0.13	U	
1,2-DICHLOROPROPANE	0.15	U	
1,3-DICHLOROBENZENE	0.1	U	
1,4-DICHLOROBENZENE	0.12	U	
2-BUTANONE	0.23	U	
2-HEXANONE	0.57	U	
4-METHYL-2-PENTANONE	0.46	U	
ACETONE	1.6	R	C
BENZENE	0.15	U	
BROMODICHLOROMETHANE	0.14	U	
BROMOFORM	0.09	U	
BROMOMETHANE	0.18	U	
CARBON DISULFIDE	0.11	U	
CARBON TETRACHLORIDE	0.16	U	
CHLOROBENZENE	0.11	U	
CHLORODIBROMOMETHANE	0.13	U	
CHLOROETHANE	0.46	U	
CHLOROFORM	0.16	U	
CHLOROMETHANE	0.08	U	
CIS-1,2-DICHLOROETHENE	0.09	U	
CIS-1,3-DICHLOROPROPENE	0.12	U	
CYCLOHEXANE	0.15	U	

nsample	TB-081105
samp_date	8/11/2005
lab_id	T4189-01
qc_type	NM
units	UG/L
Pct_Solids	0.0
DUP_OF:	

Parameter	Result	Val Qual	Qual Code
DICHLORODIFLUOROMETHANE	0.12	U	
ETHYLBENZENE	0.11	U	
ISOPROPYLBENZENE	0.12	U	
M+P-XYLENES	0.24	U	
METHYL ACETATE	0.16	U	
METHYL CYCLOHEXANE	0.14	U	
METHYL TERT-BUTYL ETHER	0.22	U	
METHYLENE CHLORIDE	2		
O-XYLENE	0.13	U	
STYRENE	0.11	U	
TETRACHLOROETHENE	0.12	U	
TOLUENE	0.11	U	
TOTAL XYLENES	0.37	U	
TRANS-1,2-DICHLOROETHENE	0.1	U	
TRANS-1,3-DICHLOROPROPENE	0.1	U	
TRICHLOROETHENE	0.12	U	
TRICHLOROFLUOROMETHANE	0.1	U	
VINYL CHLORIDE	0.09	U	

PROJ_NO: 2192

SDG: T4189 MEDIA: WATER DATA FRACTION: OS

nsample	05-MW06-I
samp_date	8/12/2005
lab_id	T4189-05
qc_type	NM
units	UG/L
Pct_Solids	0.0
DUP_OF:	

Parameter	Result	Val Qual	Qual Code
1,4-DIOXANE	2	U	

nsample	05-MW06-S
samp_date	8/12/2005
lab_id	T4189-06
qc_type	NM
units	UG/L
Pct_Solids	0.0
DUP_OF:	

Parameter	Result	Val Qual	Qual Code
1,4-DIOXANE	2.1	U	

nsample	05-MW08-SI
samp_date	8/12/2005
lab_id	T4189-07
qc_type	NM
units	UG/L
Pct_Solids	0.0
DUP_OF:	DUP-01

Parameter	Result	Val Qual	Qual Code
1,4-DIOXANE	2.1	U	

SDG: T4189 MEDIA: WATER DATA FRACTION: OS

nsample	05-MW11-D
samp_date	8/11/2005
lab_id	T4189-02
qc_type	NM
units	UG/L
Pct_Solids	0.0
DUP_OF:	

Parameter	Result	Val Qual	Qual Code
1,4-DIOXANE	2	U	

nsample	05-MW11-I
samp_date	8/11/2005
lab_id	T4189-03
qc_type	NM
units	UG/L
Pct_Solids	0.0
DUP_OF:	

Parameter	Result	Val Qual	Qual Code
1,4-DIOXANE	2	U	

nsample	05-MW11-S
samp_date	8/11/2005
lab_id	T4189-04
qc_type	NM
units	UG/L
Pct_Solids	0.0
DUP_OF:	

Parameter	Result	Val Qual	Qual Code
1,4-DIOXANE	2.1	U	

SDG: T4189 MEDIA: WATER DATA FRACTION: OS

nsample	DUP-01	nsample	RB-081205
samp_date	8/12/2005	samp_date	8/12/2005
lab_id	T4189-10	lab_id	T4189-09
qc_type	NM	qc_type	NM
units	UG/L	units	UG/L
Pct_Solids	0.0	Pct_Solids	0.0
DUP_OF:	05-MW08-SI	DUP_OF:	

Parameter	Result	Val Qual	Qual Code
1,4-DIOXANE	2	U	

Parameter	Result	Val Qual	Qual Code
1,4-DIOXANE	2	U	

PROJECT: 2192

SDG: T4272 MEDIA: WATER DATA FRACTION: OV

nsample	05-MW01-I
samp_date	8/17/2005
lab_id	T4272-09
qc_type	NM
units	UG/L
Pct_Solids	0.0
DUP_OF:	

Parameter	Result	Val Qual	Qual Code
1,1,1-TRICHLOROETHANE	0.45	J	P
1,1,2,2-TETRACHLOROETHANE	0.09	U	
1,1,2-TRICHLOROETHANE	0.11	U	
1,1,2-TRICHLOROTRIFLUOROETHANE	0.13	U	
1,1-DICHLOROETHANE	0.85	J	P
1,1-DICHLOROETHENE	0.41	J	P
1,2,4-TRICHLOROBENZENE	0.08	U	
1,2-DIBROMO-3-CHLOROPROPANE	0.2	U	
1,2-DIBROMOETHANE	0.12	U	
1,2-DICHLOROBENZENE	0.08	U	
1,2-DICHLOROETHANE	0.13	U	
1,2-DICHLOROPROPANE	0.15	U	
1,3-DICHLOROBENZENE	0.1	U	
1,4-DICHLOROBENZENE	0.12	U	
2-BUTANONE	0.23	U	
2-HEXANONE	0.57	U	
4-METHYL-2-PENTANONE	0.46	U	
ACETONE	1.6	R	C
BENZENE	0.15	U	
BROMODICHLOROMETHANE	0.14	U	
BROMOFORM	0.09	U	
BROMOMETHANE	0.18	U	
CARBON DISULFIDE	0.11	U	
CARBON TETRACHLORIDE	0.16	U	
CHLOROBENZENE	0.11	U	
CHLORODIBROMOMETHANE	0.13	U	
CHLOROETHANE	0.46	U	
CHLOROFORM	0.16	U	
CHLOROMETHANE	0.08	U	
CIS-1,2-DICHLOROETHENE	0.09	U	
CIS-1,3-DICHLOROPROPENE	0.12	U	
CYCLOHEXANE	0.15	U	

nsample	05-MW01-I
samp_date	8/17/2005
lab_id	T4272-09
qc_type	NM
units	UG/L
Pct_Solids	0.0
DUP_OF:	

Parameter	Result	Val Qual	Qual Code
DICHLORODIFLUOROMETHANE	0.12	U	
ETHYLBENZENE	0.11	U	
ISOPROPYLBENZENE	0.12	U	
M+P-XYLENES	0.24	U	
METHYL ACETATE	0.16	U	
METHYL CYCLOHEXANE	0.14	U	
METHYL TERT-BUTYL ETHER	0.22	U	
METHYLENE CHLORIDE	0.78	J	P
O-XYLENE	0.13	U	
STYRENE	0.11	U	
TETRACHLOROETHENE	0.12	UJ	C
TOLUENE	0.11	U	
TOTAL XYLENES	0.37	U	
TRANS-1,2-DICHLOROETHENE	0.1	U	
TRANS-1,3-DICHLOROPROPENE	0.1	U	
TRICHLOROETHENE	0.36	J	P
TRICHLOROFLUOROMETHANE	0.1	U	
VINYL CHLORIDE	0.09	U	

nsample	05-MW02-S
samp_date	8/17/2005
lab_id	T4272-08
qc_type	NM
units	UG/L
Pct_Solids	0.0
DUP_OF:	

Parameter	Result	Val Qual	Qual Code
1,1,1-TRICHLOROETHANE	0.16	U	
1,1,2,2-TETRACHLOROETHANE	0.09	U	
1,1,2-TRICHLOROETHANE	0.11	U	
1,1,2-TRICHLOROTRIFLUOROETHANE	0.13	U	
1,1-DICHLOROETHANE	0.17	U	
1,1-DICHLOROETHENE	0.19	U	
1,2,4-TRICHLOROBENZENE	0.08	U	
1,2-DIBROMO-3-CHLOROPROPANE	0.2	U	
1,2-DIBROMOETHANE	0.12	U	
1,2-DICHLOROBENZENE	0.08	U	
1,2-DICHLOROETHANE	0.13	U	
1,2-DICHLOROPROPANE	0.15	U	
1,3-DICHLOROBENZENE	0.1	U	
1,4-DICHLOROBENZENE	0.12	U	
2-BUTANONE	0.23	U	
2-HEXANONE	0.57	U	
4-METHYL-2-PENTANONE	0.46	U	
ACETONE	1.6	R	C
BENZENE	0.15	U	
BROMODICHLOROMETHANE	0.14	U	
BROMOFORM	0.09	U	
BROMOMETHANE	0.18	U	
CARBON DISULFIDE	0.11	U	
CARBON TETRACHLORIDE	0.16	U	
CHLOROBENZENE	0.11	U	
CHLORODIBROMOMETHANE	0.13	U	
CHLOROETHANE	0.46	U	
CHLOROFORM	0.16	U	
CHLOROMETHANE	0.08	U	
CIS-1,2-DICHLOROETHENE	0.61	J	P
CIS-1,3-DICHLOROPROPENE	0.12	U	
CYCLOHEXANE	0.15	U	

SDG: T4272 MEDIA: WATER DATA FRACTION: OV

nsample	05-MW02-S
samp_date	8/17/2005
lab_id	T4272-08
qc_type	NM
units	UG/L
Pct_Solids	0.0
DUP_OF:	

Parameter	Result	Val Qual	Qual Code
DICHLORODIFLUOROMETHANE	0.12	U	
ETHYLBENZENE	0.11	U	
ISOPROPYLBENZENE	0.12	U	
M+P-XYLENES	0.24	U	
METHYL ACETATE	0.16	U	
METHYL CYCLOHEXANE	0.14	U	
METHYL TERT-BUTYL ETHER	0.22	U	
METHYLENE CHLORIDE	0.42	U	
O-XYLENE	0.13	U	
STYRENE	0.11	U	
TETRACHLOROETHENE	1.7		
TOLUENE	0.11	U	
TOTAL XYLENES	0.37	U	
TRANS-1,2-DICHLOROETHENE	0.1	U	
TRANS-1,3-DICHLOROPROPENE	0.1	U	
TRICHLOROETHENE	0.12	U	
TRICHLOROFLUOROMETHANE	0.1	U	
VINYL CHLORIDE	0.09	U	

nsample	05-MW03-I
samp_date	8/16/2005
lab_id	T4272-04
qc_type	NM
units	UG/L
Pct_Solids	0.0
DUP_OF:	DUP-02

Parameter	Result	Val Qual	Qual Code
1,1,1-TRICHLOROETHANE	1.3		
1,1,2,2-TETRACHLOROETHANE	0.09	U	
1,1,2-TRICHLOROETHANE	0.11	U	
1,1,2-TRICHLOROTRIFLUOROETHANE	0.13	U	
1,1-DICHLOROETHANE	5.7		
1,1-DICHLOROETHENE	1.8		
1,2,4-TRICHLOROBENZENE	0.08	U	
1,2-DIBROMO-3-CHLOROPROPANE	0.2	U	
1,2-DIBROMOETHANE	0.12	U	
1,2-DICHLOROBENZENE	0.08	U	
1,2-DICHLOROETHANE	0.13	U	
1,2-DICHLOROPROPANE	0.15	U	
1,3-DICHLOROBENZENE	0.1	U	
1,4-DICHLOROBENZENE	0.12	U	
2-BUTANONE	0.23	U	
2-HEXANONE	0.57	U	
4-METHYL-2-PENTANONE	0.46	U	
ACETONE	1.6	R	C
BENZENE	0.15	U	
BROMODICHLOROMETHANE	0.14	U	
BROMOFORM	0.09	U	
BROMOMETHANE	0.18	U	
CARBON DISULFIDE	0.11	U	
CARBON TETRACHLORIDE	0.16	U	
CHLOROBENZENE	0.11	U	
CHLORODIBROMOMETHANE	0.13	U	
CHLOROETHANE	0.46	U	
CHLOROFORM	0.16	U	
CHLOROMETHANE	0.08	U	
CIS-1,2-DICHLOROETHENE	1.4		
CIS-1,3-DICHLOROPROPENE	0.12	U	
CYCLOHEXANE	0.15	U	

nsample	05-MW03-I
samp_date	8/16/2005
lab_id	T4272-04
qc_type	NM
units	UG/L
Pct_Solids	0.0
DUP_OF:	DUP-02

Parameter	Result	Val Qual	Qual Code
DICHLORODIFLUOROMETHANE	0.12	U	
ETHYLBENZENE	0.11	U	
ISOPROPYLBENZENE	0.12	U	
M+P-XYLENES	0.24	U	
METHYL ACETATE	0.16	U	
METHYL CYCLOHEXANE	0.14	U	
METHYL TERT-BUTYL ETHER	0.22	U	
METHYLENE CHLORIDE	0.42	U	
O-XYLENE	0.13	U	
STYRENE	0.11	U	
TETRACHLOROETHENE	1.2		
TOLUENE	0.11	U	
TOTAL XYLENES	0.37	U	
TRANS-1,2-DICHLOROETHENE	0.1	U	
TRANS-1,3-DICHLOROPROPENE	0.1	U	
TRICHLOROETHENE	1.4		
TRICHLOROFLUOROMETHANE	0.1	U	
VINYL CHLORIDE	0.09	U	

SDG: T4272 MEDIA: WATER DATA FRACTION: OV

nsample	05-MW03-S
samp_date	8/16/2005
lab_id	T4272-05
qc_type	NM
units	UG/L
Pct_Solids	0.0
DUP_OF:	

Parameter	Result	Val Qual	Qual Code
1,1,1-TRICHLOROETHANE	0.16	U	
1,1,2,2-TETRACHLOROETHANE	0.09	U	
1,1,2-TRICHLOROETHANE	0.11	U	
1,1,2-TRICHLOROTRIFLUOROETHANE	0.13	U	
1,1-DICHLOROETHANE	0.17	U	
1,1-DICHLOROETHENE	0.19	U	
1,2,4-TRICHLOROBENZENE	0.08	U	
1,2-DIBROMO-3-CHLOROPROPANE	0.2	U	
1,2-DIBROMOETHANE	0.12	U	
1,2-DICHLOROBENZENE	0.08	U	
1,2-DICHLOROETHANE	0.13	U	
1,2-DICHLOROPROPANE	0.15	U	
1,3-DICHLOROBENZENE	0.1	U	
1,4-DICHLOROBENZENE	0.12	U	
2-BUTANONE	0.23	U	
2-HEXANONE	0.57	U	
4-METHYL-2-PENTANONE	0.46	U	
ACETONE	1.6	R	C
BENZENE	0.15	U	
BROMODICHLOROMETHANE	0.14	U	
BROMOFORM	0.09	U	
BROMOMETHANE	0.18	U	
CARBON DISULFIDE	0.11	U	
CARBON TETRACHLORIDE	0.16	U	
CHLOROBENZENE	0.11	U	
CHLORODIBROMOMETHANE	0.13	U	
CHLOROETHANE	0.46	U	
CHLOROFORM	0.16	U	
CHLOROMETHANE	0.08	U	
CIS-1,2-DICHLOROETHENE	0.09	U	
CIS-1,3-DICHLOROPROPENE	0.12	U	
CYCLOHEXANE	0.15	U	

nsample	05-MW03-S
samp_date	8/16/2005
lab_id	T4272-05
qc_type	NM
units	UG/L
Pct_Solids	0.0
DUP_OF:	

Parameter	Result	Val Qual	Qual Code
DICHLORODIFLUOROMETHANE	0.12	U	
ETHYLBENZENE	0.11	U	
ISOPROPYLBENZENE	0.12	U	
M+P-XYLENES	0.24	U	
METHYL ACETATE	0.16	U	
METHYL CYCLOHEXANE	0.14	U	
METHYL TERT-BUTYL ETHER	0.22	U	
METHYLENE CHLORIDE	0.42	U	
O-XYLENE	0.13	U	
STYRENE	0.11	U	
TETRACHLOROETHENE	0.12	U	
TOLUENE	0.11	U	
TOTAL XYLENES	0.37	U	
TRANS-1,2-DICHLOROETHENE	0.1	U	
TRANS-1,3-DICHLOROPROPENE	0.1	U	
TRICHLOROETHENE	0.12	U	
TRICHLOROFLUOROMETHANE	0.1	U	
VINYL CHLORIDE	0.09	U	

nsample	05-MW04-I
samp_date	8/16/2005
lab_id	T4272-02
qc_type	NM
units	UG/L
Pct_Solids	0.0
DUP_OF:	

Parameter	Result	Val Qual	Qual Code
1,1,1-TRICHLOROETHANE	25		
1,1,2,2-TETRACHLOROETHANE	0.09	U	
1,1,2-TRICHLOROETHANE	0.7	J	P
1,1,2-TRICHLOROTRIFLUOROETHANE	0.13	U	
1,1-DICHLOROETHANE	24		
1,1-DICHLOROETHENE	16		
1,2,4-TRICHLOROBENZENE	0.08	U	
1,2-DIBROMO-3-CHLOROPROPANE	0.2	U	
1,2-DIBROMOETHANE	0.12	U	
1,2-DICHLOROBENZENE	0.08	U	
1,2-DICHLOROETHANE	0.4	J	P
1,2-DICHLOROPROPANE	0.15	U	
1,3-DICHLOROBENZENE	0.1	U	
1,4-DICHLOROBENZENE	0.12	U	
2-BUTANONE	0.23	U	
2-HEXANONE	0.57	U	
4-METHYL-2-PENTANONE	0.46	U	
ACETONE	1.6	R	C
BENZENE	0.15	U	
BROMODICHLOROMETHANE	0.14	U	
BROMOFORM	0.09	U	
BROMOMETHANE	0.18	U	
CARBON DISULFIDE	0.11	U	
CARBON TETRACHLORIDE	0.16	U	
CHLOROBENZENE	0.11	U	
CHLORODIBROMOMETHANE	0.13	U	
CHLOROETHANE	0.46	U	
CHLOROFORM	0.16	U	
CHLOROMETHANE	0.08	U	
CIS-1,2-DICHLOROETHENE	5.7		
CIS-1,3-DICHLOROPROPENE	0.12	U	
CYCLOHEXANE	0.15	U	

SDG: T4272 MEDIA: WATER DATA FRACTION: OV

nsample	05-MW04-I
samp_date	8/16/2005
lab_id	T4272-02
qc_type	NM
units	UG/L
Pct_Solids	0.0
DUP_OF:	

Parameter	Result	Val Qual	Qual Code
DICHLORODIFLUOROMETHANE	0.12	U	
ETHYLBENZENE	0.11	U	
ISOPROPYLBENZENE	0.12	U	
M+P-XYLENES	0.24	U	
METHYL ACETATE	0.16	U	
METHYL CYCLOHEXANE	0.14	U	
METHYL TERT-BUTYL ETHER	0.22	U	
METHYLENE CHLORIDE	0.42	U	
O-XYLENE	0.13	U	
STYRENE	0.11	U	
TETRACHLOROETHENE	1.5		
TOLUENE	0.11	U	
TOTAL XYLENES	0.37	U	
TRANS-1,2-DICHLOROETHENE	0.1	U	
TRANS-1,3-DICHLOROPROPENE	0.1	U	
TRICHLOROETHENE	14		
TRICHLOROFLUOROMETHANE	0.1	U	
VINYL CHLORIDE	0.09	U	

nsample	05-MW04-S
samp_date	8/16/2005
lab_id	T4272-03
qc_type	NM
units	UG/L
Pct_Solids	0.0
DUP_OF:	

Parameter	Result	Val Qual	Qual Code
1,1,1-TRICHLOROETHANE	0.16	U	
1,1,2,2-TETRACHLOROETHANE	0.09	U	
1,1,2-TRICHLOROETHANE	0.11	U	
1,1,2-TRICHLOROTRIFLUOROETHANE	0.13	U	
1,1-DICHLOROETHANE	0.17	U	
1,1-DICHLOROETHENE	0.19	U	
1,2,4-TRICHLOROBENZENE	0.08	U	
1,2-DIBROMO-3-CHLOROPROPANE	0.2	U	
1,2-DIBROMOETHANE	0.12	U	
1,2-DICHLOROBENZENE	0.08	U	
1,2-DICHLOROETHANE	0.13	U	
1,2-DICHLOROPROPANE	0.15	U	
1,3-DICHLOROBENZENE	0.1	U	
1,4-DICHLOROBENZENE	0.12	U	
2-BUTANONE	0.23	U	
2-HEXANONE	0.57	U	
4-METHYL-2-PENTANONE	0.46	U	
ACETONE	1.6	R	C
BENZENE	0.15	U	
BROMODICHLOROMETHANE	0.14	U	
BROMOFORM	0.09	U	
BROMOMETHANE	0.18	U	
CARBON DISULFIDE	0.11	U	
CARBON TETRACHLORIDE	0.16	U	
CHLOROBENZENE	0.11	U	
CHLORODIBROMOMETHANE	0.13	U	
CHLOROETHANE	0.46	U	
CHLOROFORM	0.16	U	
CHLOROMETHANE	0.08	U	
CIS-1,2-DICHLOROETHENE	0.09	U	
CIS-1,3-DICHLOROPROPENE	0.12	U	
CYCLOHEXANE	0.15	U	

nsample	05-MW04-S
samp_date	8/16/2005
lab_id	T4272-03
qc_type	NM
units	UG/L
Pct_Solids	0.0
DUP_OF:	

Parameter	Result	Val Qual	Qual Code
DICHLORODIFLUOROMETHANE	0.12	U	
ETHYLBENZENE	0.11	U	
ISOPROPYLBENZENE	0.12	U	
M+P-XYLENES	0.24	U	
METHYL ACETATE	0.16	U	
METHYL CYCLOHEXANE	0.14	U	
METHYL TERT-BUTYL ETHER	0.22	U	
METHYLENE CHLORIDE	0.42	U	
O-XYLENE	0.13	U	
STYRENE	0.11	U	
TETRACHLOROETHENE	0.12	U	
TOLUENE	0.11	U	
TOTAL XYLENES	0.37	U	
TRANS-1,2-DICHLOROETHENE	0.1	U	
TRANS-1,3-DICHLOROPROPENE	0.1	U	
TRICHLOROETHENE	0.12	U	
TRICHLOROFLUOROMETHANE	0.1	U	
VINYL CHLORIDE	0.09	U	

SDG: T4272 MEDIA: WATER DATA FRACTION: OV

nsample	05-MW09-I
samp_date	8/17/2005
lab_id	T4272-14
qc_type	NM
units	UG/L
Pct_Solids	0.0
DUP_OF:	

Parameter	Result	Val Qual	Qual Code
1,1,1-TRICHLOROETHANE	9.4		
1,1,2,2-TETRACHLOROETHANE	0.09	U	
1,1,2-TRICHLOROETHANE	0.11	U	
1,1,2-TRICHLOROTRIFLUOROETHANE	0.13	U	
1,1-DICHLOROETHANE	14		
1,1-DICHLOROETHENE	13		
1,2,4-TRICHLOROBENZENE	0.08	U	
1,2-DIBROMO-3-CHLOROPROPANE	0.2	U	
1,2-DIBROMOETHANE	0.12	U	
1,2-DICHLOROBENZENE	0.08	U	
1,2-DICHLOROETHANE	0.78	J	P
1,2-DICHLOROPROPANE	0.15	U	
1,3-DICHLOROBENZENE	0.1	U	
1,4-DICHLOROBENZENE	0.12	U	
2-BUTANONE	0.23	U	
2-HEXANONE	0.57	U	
4-METHYL-2-PENTANONE	0.46	U	
ACETONE	1.6	R	C
BENZENE	0.15	U	
BROMODICHLOROMETHANE	0.14	U	
BROMOFORM	0.09	U	
BROMOMETHANE	0.18	U	
CARBON DISULFIDE	0.11	U	
CARBON TETRACHLORIDE	0.16	U	
CHLOROBENZENE	0.11	U	
CHLORODIBROMOMETHANE	0.13	U	
CHLOROETHANE	0.46	U	
CHLOROFORM	0.16	U	
CHLOROMETHANE	0.08	U	
CIS-1,2-DICHLOROETHENE	2.3		
CIS-1,3-DICHLOROPROPENE	0.12	U	
CYCLOHEXANE	0.15	U	

nsample	05-MW09-I
samp_date	8/17/2005
lab_id	T4272-14
qc_type	NM
units	UG/L
Pct_Solids	0.0
DUP_OF:	

Parameter	Result	Val Qual	Qual Code
DICHLORODIFLUOROMETHANE	0.12	U	
ETHYLBENZENE	0.11	U	
ISOPROPYLBENZENE	0.12	U	
M+P-XYLENES	0.24	U	
METHYL ACETATE	0.16	U	
METHYL CYCLOHEXANE	0.14	U	
METHYL TERT-BUTYL ETHER	0.22	U	
METHYLENE CHLORIDE	1		
O-XYLENE	0.13	U	
STYRENE	0.11	U	
TETRACHLOROETHENE	1	J	C
TOLUENE	0.11	U	
TOTAL XYLENES	0.37	U	
TRANS-1,2-DICHLOROETHENE	0.1	U	
TRANS-1,3-DICHLOROPROPENE	0.1	U	
TRICHLOROETHENE	7.3		
TRICHLOROFLUOROMETHANE	0.1	U	
VINYL CHLORIDE	0.09	U	

nsample	05-MW09-S
samp_date	8/17/2005
lab_id	T4272-13
qc_type	NM
units	UG/L
Pct_Solids	0.0
DUP_OF:	

Parameter	Result	Val Qual	Qual Code
1,1,1-TRICHLOROETHANE	8.2		
1,1,2,2-TETRACHLOROETHANE	0.09	U	
1,1,2-TRICHLOROETHANE	0.11	U	
1,1,2-TRICHLOROTRIFLUOROETHANE	0.13	U	
1,1-DICHLOROETHANE	21		
1,1-DICHLOROETHENE	15		
1,2,4-TRICHLOROBENZENE	0.08	U	
1,2-DIBROMO-3-CHLOROPROPANE	0.2	U	
1,2-DIBROMOETHANE	0.12	U	
1,2-DICHLOROBENZENE	0.08	U	
1,2-DICHLOROETHANE	0.4	J	P
1,2-DICHLOROPROPANE	0.15	U	
1,3-DICHLOROBENZENE	0.1	U	
1,4-DICHLOROBENZENE	0.12	U	
2-BUTANONE	0.23	U	
2-HEXANONE	0.57	U	
4-METHYL-2-PENTANONE	0.46	U	
ACETONE	1.6	R	C
BENZENE	0.83	J	P
BROMODICHLOROMETHANE	0.14	U	
BROMOFORM	0.09	U	
BROMOMETHANE	0.18	U	
CARBON DISULFIDE	0.11	U	
CARBON TETRACHLORIDE	0.16	U	
CHLOROBENZENE	0.11	U	
CHLORODIBROMOMETHANE	0.13	U	
CHLOROETHANE	0.46	U	
CHLOROFORM	0.16	U	
CHLOROMETHANE	0.08	U	
CIS-1,2-DICHLOROETHENE	0.8	J	P
CIS-1,3-DICHLOROPROPENE	0.12	U	
CYCLOHEXANE	0.15	U	

SDG: T4272 MEDIA: WATER DATA FRACTION: OV

nsample	05-MW09-S
samp_date	8/17/2005
lab_id	T4272-13
qc_type	NM
units	UG/L
Pct_Solids	0.0
DUP_OF:	

Parameter	Result	Val Qual	Qual Code
DICHLORODIFLUOROMETHANE	0.12	U	
ETHYLBENZENE	0.11	U	
ISOPROPYLBENZENE	0.12	U	
M+P-XYLENES	0.24	U	
METHYL ACETATE	0.16	U	
METHYL CYCLOHEXANE	0.14	U	
METHYL TERT-BUTYL ETHER	0.22	U	
METHYLENE CHLORIDE	0.65	J	P
O-XYLENE	0.13	U	
STYRENE	0.11	U	
TETRACHLOROETHENE	1.5	J	C
TOLUENE	0.11	U	
TOTAL XYLENES	0.37	U	
TRANS-1,2-DICHLOROETHENE	0.1	U	
TRANS-1,3-DICHLOROPROPENE	0.1	U	
TRICHLOROETHENE	6.2		
TRICHLOROFLUOROMETHANE	0.1	U	
VINYL CHLORIDE	0.09	U	

nsample	05-MW09-SI
samp_date	8/17/2005
lab_id	T4272-10
qc_type	NM
units	UG/L
Pct_Solids	0.0
DUP_OF:	

Parameter	Result	Val Qual	Qual Code
1,1,1-TRICHLOROETHANE	16		
1,1,2,2-TETRACHLOROETHANE	0.09	U	
1,1,2-TRICHLOROETHANE	0.64	J	P
1,1,2-TRICHLOROTRIFLUOROETHANE	0.13	U	
1,1-DICHLOROETHANE	19		
1,1-DICHLOROETHENE	25		
1,2,4-TRICHLOROBENZENE	0.08	U	
1,2-DIBROMO-3-CHLOROPROPANE	0.2	U	
1,2-DIBROMOETHANE	0.12	U	
1,2-DICHLOROBENZENE	0.08	U	
1,2-DICHLOROETHANE	0.89	J	P
1,2-DICHLOROPROPANE	0.15	U	
1,3-DICHLOROBENZENE	0.1	U	
1,4-DICHLOROBENZENE	0.12	U	
2-BUTANONE	0.23	U	
2-HEXANONE	0.57	U	
4-METHYL-2-PENTANONE	0.46	U	
ACETONE	1.6	R	C
BENZENE	0.39	J	P
BROMODICHLOROMETHANE	0.14	U	
BROMOFORM	0.09	U	
BROMOMETHANE	0.18	U	
CARBON DISULFIDE	0.11	U	
CARBON TETRACHLORIDE	0.16	U	
CHLOROBENZENE	0.11	U	
CHLORODIBROMOMETHANE	0.13	U	
CHLOROETHANE	0.46	U	
CHLOROFORM	0.16	U	
CHLOROMETHANE	0.08	U	
CIS-1,2-DICHLOROETHENE	1.9		
CIS-1,3-DICHLOROPROPENE	0.12	U	
CYCLOHEXANE	0.15	U	

nsample	05-MW09-SI
samp_date	8/17/2005
lab_id	T4272-10
qc_type	NM
units	UG/L
Pct_Solids	0.0
DUP_OF:	

Parameter	Result	Val Qual	Qual Code
DICHLORODIFLUOROMETHANE	0.12	U	
ETHYLBENZENE	0.11	U	
ISOPROPYLBENZENE	0.12	U	
M+P-XYLENES	0.24	U	
METHYL ACETATE	0.16	U	
METHYL CYCLOHEXANE	0.14	U	
METHYL TERT-BUTYL ETHER	0.22	U	
METHYLENE CHLORIDE	1		
O-XYLENE	0.13	U	
STYRENE	0.11	U	
TETRACHLOROETHENE	1.5	J	C
TOLUENE	0.11	U	
TOTAL XYLENES	0.37	U	
TRANS-1,2-DICHLOROETHENE	0.1	U	
TRANS-1,3-DICHLOROPROPENE	0.1	U	
TRICHLOROETHENE	13		
TRICHLOROFLUOROMETHANE	0.1	U	
VINYL CHLORIDE	0.09	U	

SDG: T4272 MEDIA: WATER DATA FRACTION: OV

nsample	05-MW12-I
samp_date	8/17/2005
lab_id	T4272-07
qc_type	NM
units	UG/L
Pct_Solids	0.0
DUP_OF:	

Parameter	Result	Val Qual	Qual Code
1,1,1-TRICHLOROETHANE	0.16	U	
1,1,2,2-TETRACHLOROETHANE	0.09	U	
1,1,2-TRICHLOROETHANE	0.11	U	
1,1,2-TRICHLOROTRIFLUOROETHANE	0.13	U	
1,1-DICHLOROETHANE	0.79	J	P
1,1-DICHLOROETHENE	0.19	U	
1,2,4-TRICHLOROBENZENE	0.08	U	
1,2-DIBROMO-3-CHLOROPROPANE	0.2	U	
1,2-DIBROMOETHANE	0.12	U	
1,2-DICHLOROBENZENE	0.08	U	
1,2-DICHLOROETHANE	0.13	U	
1,2-DICHLOROPROPANE	0.15	U	
1,3-DICHLOROBENZENE	0.1	U	
1,4-DICHLOROBENZENE	0.12	U	
2-BUTANONE	0.23	U	
2-HEXANONE	0.57	U	
4-METHYL-2-PENTANONE	0.46	U	
ACETONE	1.6	R	C
BENZENE	0.15	U	
BROMODICHLOROMETHANE	0.14	U	
BROMOFORM	0.09	U	
BROMOMETHANE	0.18	U	
CARBON DISULFIDE	0.11	U	
CARBON TETRACHLORIDE	0.16	U	
CHLOROBENZENE	0.11	U	
CHLORODIBROMOMETHANE	0.13	U	
CHLOROETHANE	0.46	U	
CHLOROFORM	0.16	U	
CHLOROMETHANE	0.08	U	
CIS-1,2-DICHLOROETHENE	0.6	J	P
CIS-1,3-DICHLOROPROPENE	0.12	U	
CYCLOHEXANE	0.15	U	

nsample	05-MW12-I
samp_date	8/17/2005
lab_id	T4272-07
qc_type	NM
units	UG/L
Pct_Solids	0.0
DUP_OF:	

Parameter	Result	Val Qual	Qual Code
DICHLORODIFLUOROMETHANE	0.12	U	
ETHYLBENZENE	0.11	U	
ISOPROPYLBENZENE	0.12	U	
M+P-XYLENES	0.24	U	
METHYL ACETATE	0.16	U	
METHYL CYCLOHEXANE	0.14	U	
METHYL TERT-BUTYL ETHER	0.22	U	
METHYLENE CHLORIDE	0.42	U	
O-XYLENE	0.13	U	
STYRENE	0.11	U	
TETRACHLOROETHENE	1.1		
TOLUENE	0.11	U	
TOTAL XYLENES	0.37	U	
TRANS-1,2-DICHLOROETHENE	0.1	U	
TRANS-1,3-DICHLOROPROPENE	0.1	U	
TRICHLOROETHENE	0.12	U	
TRICHLOROFLUOROMETHANE	0.1	U	
VINYL CHLORIDE	0.09	U	

nsample	DUP-02
samp_date	8/16/2005
lab_id	T4272-06
qc_type	NM
units	UG/L
Pct_Solids	0.0
DUP_OF:	05-MW03-I

Parameter	Result	Val Qual	Qual Code
1,1,1-TRICHLOROETHANE	1.3		
1,1,2,2-TETRACHLOROETHANE	0.09	U	
1,1,2-TRICHLOROETHANE	0.11	U	
1,1,2-TRICHLOROTRIFLUOROETHANE	0.13	U	
1,1-DICHLOROETHANE	5.7		
1,1-DICHLOROETHENE	1.8		
1,2,4-TRICHLOROBENZENE	0.08	U	
1,2-DIBROMO-3-CHLOROPROPANE	0.2	U	
1,2-DIBROMOETHANE	0.12	U	
1,2-DICHLOROBENZENE	0.08	U	
1,2-DICHLOROETHANE	0.13	U	
1,2-DICHLOROPROPANE	0.15	U	
1,3-DICHLOROBENZENE	0.1	U	
1,4-DICHLOROBENZENE	0.12	U	
2-BUTANONE	0.23	U	
2-HEXANONE	0.57	U	
4-METHYL-2-PENTANONE	0.46	U	
ACETONE	1.6	R	C
BENZENE	0.15	U	
BROMODICHLOROMETHANE	0.14	U	
BROMOFORM	0.09	U	
BROMOMETHANE	0.18	U	
CARBON DISULFIDE	0.11	U	
CARBON TETRACHLORIDE	0.16	U	
CHLOROBENZENE	0.11	U	
CHLORODIBROMOMETHANE	0.13	U	
CHLOROETHANE	0.46	U	
CHLOROFORM	0.16	U	
CHLOROMETHANE	0.08	U	
CIS-1,2-DICHLOROETHENE	1.4		
CIS-1,3-DICHLOROPROPENE	0.12	U	
CYCLOHEXANE	0.15	U	

SDG: T4272 MEDIA: WATER DATA FRACTION: OV

nsample	DUP-02
samp_date	8/16/2005
lab_id	T4272-06
qc_type	NM
units	UG/L
Pct_Solids	0.0
DUP_OF:	05-MW03-I

Parameter	Result	Val Qual	Qual Code
DICHLORODIFLUOROMETHANE	0.12	U	
ETHYLBENZENE	0.11	U	
ISOPROPYLBENZENE	0.12	U	
M+P-XYLENES	0.24	U	
METHYL ACETATE	0.16	U	
METHYL CYCLOHEXANE	0.14	U	
METHYL TERT-BUTYL ETHER	0.22	U	
METHYLENE CHLORIDE	0.42	U	
O-XYLENE	0.13	U	
STYRENE	0.11	U	
TETRACHLOROETHENE	1.1		
TOLUENE	0.11	U	
TOTAL XYLENES	0.37	U	
TRANS-1,2-DICHLOROETHENE	0.1	U	
TRANS-1,3-DICHLOROPROPENE	0.1	U	
TRICHLOROETHENE	1.4		
TRICHLOROFLUOROMETHANE	0.1	U	
VINYL CHLORIDE	0.09	U	

nsample	FB-081705
samp_date	8/17/2005
lab_id	T4272-15
qc_type	NM
units	UG/L
Pct_Solids	0.0
DUP_OF:	

Parameter	Result	Val Qual	Qual Code
1,1,1-TRICHLOROETHANE	0.16	U	
1,1,2,2-TETRACHLOROETHANE	0.09	U	
1,1,2-TRICHLOROETHANE	0.11	U	
1,1,2-TRICHLOROTRIFLUOROETHANE	0.13	U	
1,1-DICHLOROETHANE	0.17	U	
1,1-DICHLOROETHENE	0.19	U	
1,2,4-TRICHLOROBENZENE	0.08	U	
1,2-DIBROMO-3-CHLOROPROPANE	0.2	U	
1,2-DIBROMOETHANE	0.12	U	
1,2-DICHLOROBENZENE	0.08	U	
1,2-DICHLOROETHANE	0.13	U	
1,2-DICHLOROPROPANE	0.15	U	
1,3-DICHLOROBENZENE	0.1	U	
1,4-DICHLOROBENZENE	1.1		
2-BUTANONE	0.23	U	
2-HEXANONE	0.57	U	
4-METHYL-2-PENTANONE	0.46	U	
ACETONE	1.6	R	C
BENZENE	0.15	U	
BROMODICHLOROMETHANE	0.14	U	
BROMOFORM	0.09	U	
BROMOMETHANE	0.18	U	
CARBON DISULFIDE	0.11	U	
CARBON TETRACHLORIDE	0.16	U	
CHLOROBENZENE	0.11	U	
CHLORODIBROMOMETHANE	0.13	U	
CHLOROETHANE	0.46	U	
CHLOROFORM	0.16	U	
CHLOROMETHANE	0.08	U	
CIS-1,2-DICHLOROETHENE	0.09	U	
CIS-1,3-DICHLOROPROPENE	0.12	U	
CYCLOHEXANE	0.15	U	

nsample	FB-081705
samp_date	8/17/2005
lab_id	T4272-15
qc_type	NM
units	UG/L
Pct_Solids	0.0
DUP_OF:	

Parameter	Result	Val Qual	Qual Code
DICHLORODIFLUOROMETHANE	0.12	U	
ETHYLBENZENE	0.11	U	
ISOPROPYLBENZENE	0.12	U	
M+P-XYLENES	0.24	U	
METHYL ACETATE	0.16	U	
METHYL CYCLOHEXANE	0.14	U	
METHYL TERT-BUTYL ETHER	0.22	U	
METHYLENE CHLORIDE	0.42	U	
O-XYLENE	0.13	U	
STYRENE	0.11	U	
TETRACHLOROETHENE	0.12	U	
TOLUENE	0.11	U	
TOTAL XYLENES	0.37	U	
TRANS-1,2-DICHLOROETHENE	0.1	U	
TRANS-1,3-DICHLOROPROPENE	0.1	U	
TRICHLOROETHENE	0.12	U	
TRICHLOROFLUOROMETHANE	0.1	U	
VINYL CHLORIDE	0.09	U	

SDG: T4272 MEDIA: WATER DATA FRACTION: OV

nsample	TB-081605
samp_date	8/15/2005
lab_id	T4272-01
qc_type	NM
units	UG/L
Pct_Solids	0.0
DUP_OF:	

Parameter	Result	Val Qual	Qual Code
1,1,1-TRICHLOROETHANE	0.16	U	
1,1,2,2-TETRACHLOROETHANE	0.09	U	
1,1,2-TRICHLOROETHANE	0.11	U	
1,1,2-TRICHLOROTRIFLUOROETHANE	0.13	U	
1,1-DICHLOROETHANE	0.17	U	
1,1-DICHLOROETHENE	0.19	U	
1,2,4-TRICHLOROBENZENE	0.08	U	
1,2-DIBROMO-3-CHLOROPROPANE	0.2	U	
1,2-DIBROMOETHANE	0.12	U	
1,2-DICHLOROBENZENE	0.08	U	
1,2-DICHLOROETHANE	0.13	U	
1,2-DICHLOROPROPANE	0.15	U	
1,3-DICHLOROBENZENE	0.1	U	
1,4-DICHLOROBENZENE	0.12	U	
2-BUTANONE	0.23	U	
2-HEXANONE	0.57	U	
4-METHYL-2-PENTANONE	0.46	U	
ACETONE	1.6	R	C
BENZENE	0.15	U	
BROMODICHLOROMETHANE	0.14	U	
BROMOFORM	0.09	U	
BROMOMETHANE	0.18	U	
CARBON DISULFIDE	0.11	U	
CARBON TETRACHLORIDE	0.16	U	
CHLOROBENZENE	0.11	U	
CHLORODIBROMOMETHANE	0.13	U	
CHLOROETHANE	0.46	U	
CHLOROFORM	0.16	U	
CHLOROMETHANE	0.08	U	
CIS-1,2-DICHLOROETHENE	0.09	U	
CIS-1,3-DICHLOROPROPENE	0.12	U	
CYCLOHEXANE	0.15	U	

nsample	TB-081605
samp_date	8/15/2005
lab_id	T4272-01
qc_type	NM
units	UG/L
Pct_Solids	0.0
DUP_OF:	

Parameter	Result	Val Qual	Qual Code
DICHLORODIFLUOROMETHANE	0.12	U	
ETHYLBENZENE	0.11	U	
ISOPROPYLBENZENE	0.12	U	
M+P-XYLENES	0.24	U	
METHYL ACETATE	0.16	U	
METHYL CYCLOHEXANE	0.14	U	
METHYL TERT-BUTYL ETHER	0.22	U	
METHYLENE CHLORIDE	0.42	U	
O-XYLENE	0.13	U	
STYRENE	0.11	U	
TETRACHLOROETHENE	0.12	U	
TOLUENE	0.11	U	
TOTAL XYLENES	0.37	U	
TRANS-1,2-DICHLOROETHENE	0.1	U	
TRANS-1,3-DICHLOROPROPENE	0.1	U	
TRICHLOROETHENE	0.12	U	
TRICHLOROFLUOROMETHANE	0.1	U	
VINYL CHLORIDE	0.09	U	

SDG: T4272 MEDIA: WATER DATA FRACTION: OS

nsample	05-MW01-I	nsample	05-MW02-S	nsample	05-MW03-I
samp_date	8/17/2005	samp_date	8/17/2005	samp_date	8/16/2005
lab_id	T4272-09	lab_id	T4272-08	lab_id	T4272-04
qc_type	NM	qc_type	NM	qc_type	NM
units	UG/L	units	UG/L	units	UG/L
Pct_Solids	0.0	Pct_Solids	0.0	Pct_Solids	0.0
DUP_OF:		DUP_OF:		DUP_OF:	DUP-02

Parameter	Result	Val Qual	Qual Code
1,4-DIOXANE	2.1	U	

Parameter	Result	Val Qual	Qual Code
1,4-DIOXANE	2.1	U	

Parameter	Result	Val Qual	Qual Code
1,4-DIOXANE	2.1	U	

PROJ_NO: 2192

SDG: T4272 MEDIA: WATER DATA FRACTION: OS

nsample	05-MW03-S
samp_date	8/16/2005
lab_id	T4272-05
qc_type	NM
units	UG/L
Pct_Solids	0.0
DUP_OF:	

Parameter	Result	Val Qual	Qual Code
1,4-DIOXANE	2.1	U	

nsample	05-MW04-I
samp_date	8/16/2005
lab_id	T4272-02
qc_type	NM
units	UG/L
Pct_Solids	0.0
DUP_OF:	

Parameter	Result	Val Qual	Qual Code
1,4-DIOXANE	2.1	U	

nsample	05-MW04-S
samp_date	8/16/2005
lab_id	T4272-03
qc_type	NM
units	UG/L
Pct_Solids	0.0
DUP_OF:	

Parameter	Result	Val Qual	Qual Code
1,4-DIOXANE	2.1	U	

SDG: T4272 MEDIA: WATER DATA FRACTION: OS

nsample	05-MW09-I
samp_date	8/17/2005
lab_id	T4272-14
qc_type	NM
units	UG/L
Pct_Solids	0.0
DUP_OF:	

Parameter	Result	Val Qual	Qual Code
1,4-DIOXANE	2.1	U	

nsample	05-MW09-S
samp_date	8/17/2005
lab_id	T4272-13
qc_type	NM
units	UG/L
Pct_Solids	0.0
DUP_OF:	

Parameter	Result	Val Qual	Qual Code
1,4-DIOXANE	2.1	U	

nsample	05-MW09-SI
samp_date	8/17/2005
lab_id	T4272-10
qc_type	NM
units	UG/L
Pct_Solids	0.0
DUP_OF:	

Parameter	Result	Val Qual	Qual Code
1,4-DIOXANE	2.1	U	

PROJ_NO: 2192

SDG: T4272 MEDIA: WATER DATA FRACTION: OS

nsample	05-MW12-I
samp_date	8/17/2005
lab_id	T4272-07
qc_type	NM
units	UG/L
Pct_Solids	0.0
DUP_OF:	

Parameter	Result	Val Qual	Qual Code
1,4-DIOXANE	2.1	U	

nsample	DUP-02
samp_date	8/16/2005
lab_id	T4272-06
qc_type	NM
units	UG/L
Pct_Solids	0.0
DUP_OF:	05-MW03-I

Parameter	Result	Val Qual	Qual Code
1,4-DIOXANE	2.1	U	

nsample	FB-081705
samp_date	8/17/2005
lab_id	T4272-15
qc_type	NM
units	UG/L
Pct_Solids	0.0
DUP_OF:	

Parameter	Result	Val Qual	Qual Code
1,4-DIOXANE	2.1	U	

PROJ_NO: 2192

SDG: T4308 MEDIA: WATER DATA FRACTION: OV

nsample	05-MW01-S
samp_date	8/18/2005
lab_id	T4308-04
qc_type	NM
units	UG/L
Pct_Solids	0.0
DUP_OF:	DUP-03

Parameter	Result	Val Qual	Qual Code
1,1,2,2-TETRACHLOROETHANE	0.09	U	
1,1,2-TRICHLOROETHANE	23		
1,1,2-TRICHLOROTRIFLUOROETHANE	0.13	U	
1,2,4-TRICHLOROBENZENE	0.08	U	
1,2-DIBROMO-3-CHLOROPROPANE	0.2	U	
1,2-DIBROMOETHANE	0.12	U	
1,2-DICHLOROBENZENE	1.7		
1,2-DICHLOROETHANE	4.1		
1,2-DICHLOROPROPANE	0.15	U	
1,3-DICHLOROBENZENE	0.1	U	
1,4-DICHLOROBENZENE	7.6		
2-BUTANONE	0.23	U	
2-HEXANONE	0.57	U	
4-METHYL-2-PENTANONE	0.46	U	
ACETONE	1.6	R	C
BENZENE	8.5		
BROMODICHLOROMETHANE	0.14	U	
BROMOFORM	0.09	U	
BROMOMETHANE	0.18	U	
CARBON DISULFIDE	0.11	U	
CARBON TETRACHLORIDE	0.16	U	
CHLOROBENZENE	0.11	U	
CHLORODIBROMOMETHANE	0.13	U	
CHLOROETHANE	0.63	J	CP
CHLOROFORM	0.33	J	P
CHLOROMETHANE	0.08	U	
CIS-1,3-DICHLOROPROPENE	0.12	U	
CYCLOHEXANE	0.15	U	
DICHLORODIFLUOROMETHANE	0.12	U	
ETHYLBENZENE	0.11	U	
ISOPROPYLBENZENE	0.12	U	
M+P-XYLENES	0.24	U	

nsample	05-MW01-S
samp_date	8/18/2005
lab_id	T4308-04
qc_type	NM
units	UG/L
Pct_Solids	0.0
DUP_OF:	DUP-03

Parameter	Result	Val Qual	Qual Code
METHYL ACETATE	0.16	U	
METHYL CYCLOHEXANE	2.3		
METHYL TERT-BUTYL ETHER	0.22	U	
METHYLENE CHLORIDE	1.2	B	B
O-XYLENE	0.13	U	
STYRENE	0.11	U	
TOLUENE	0.11	U	
TOTAL XYLENES	0.37	U	
TRANS-1,2-DICHLOROETHENE	0.89	J	P
TRANS-1,3-DICHLOROPROPENE	0.1	U	
TRICHLOROFLUOROMETHANE	0.1	U	
VINYL CHLORIDE	0.09	U	

nsample	05-MW01-SDL
samp_date	8/18/2005
lab_id	T4308-04DL
qc_type	NM
units	UG/L
Pct_Solids	0.0
DUP_OF:	DUP-03DL

Parameter	Result	Val Qual	Qual Code
1,1,1-TRICHLOROETHANE	930		
1,1-DICHLOROETHANE	480		
1,1-DICHLOROETHENE	180		
CIS-1,2-DICHLOROETHENE	270		
TETRACHLOROETHENE	50	J	P
TRICHLOROETHENE	470		

SDG: T4308 MEDIA: WATER DATA FRACTION: OV

nsample	05-MW01-SI
samp_date	8/18/2005
lab_id	T4308-05
qc_type	NM
units	UG/L
Pct_Solids	0.0
DUP_OF:	

Parameter	Result	Val Qual	Qual Code
1,1,1-TRICHLOROETHANE	15		
1,1,2,2-TETRACHLOROETHANE	0.09	U	
1,1,2-TRICHLOROETHANE	0.66	J	P
1,1,2-TRICHLOROTRIFLUOROETHANE	0.13	U	
1,1-DICHLOROETHANE	26		
1,1-DICHLOROETHENE	12		
1,2,4-TRICHLOROBENZENE	0.08	U	
1,2-DIBROMO-3-CHLOROPROPANE	0.2	U	
1,2-DIBROMOETHANE	0.12	U	
1,2-DICHLOROBENZENE	0.08	U	
1,2-DICHLOROETHANE	3.6		
1,2-DICHLOROPROPANE	0.15	U	
1,3-DICHLOROBENZENE	0.1	U	
1,4-DICHLOROBENZENE	0.12	U	
2-BUTANONE	0.23	U	
2-HEXANONE	0.57	U	
4-METHYL-2-PENTANONE	0.46	U	
ACETONE	1.6	R	C
BENZENE	0.15	U	
BROMODICHLOROMETHANE	0.14	U	
BROMOFORM	0.09	U	
BROMOMETHANE	0.18	U	
CARBON DISULFIDE	0.11	U	
CARBON TETRACHLORIDE	0.16	U	
CHLOROBENZENE	0.11	U	
CHLORODIBROMOMETHANE	0.13	U	
CHLOROETHANE	0.46	U	
CHLOROFORM	0.16	U	
CHLOROMETHANE	0.08	U	
CIS-1,2-DICHLOROETHENE	5.5		
CIS-1,3-DICHLOROPROPENE	0.12	U	
CYCLOHEXANE	0.15	U	

nsample	05-MW01-SI
samp_date	8/18/2005
lab_id	T4308-05
qc_type	NM
units	UG/L
Pct_Solids	0.0
DUP_OF:	

Parameter	Result	Val Qual	Qual Code
DICHLORODIFLUOROMETHANE	0.12	U	
ETHYLBENZENE	0.11	U	
ISOPROPYLBENZENE	0.12	U	
M+P-XYLENES	0.24	U	
METHYL ACETATE	0.16	U	
METHYL CYCLOHEXANE	0.14	U	
METHYL TERT-BUTYL ETHER	0.22	U	
METHYLENE CHLORIDE	0.42	U	
O-XYLENE	0.13	U	
STYRENE	0.11	U	
TETRACHLOROETHENE	2.5		
TOLUENE	0.11	U	
TOTAL XYLENES	0.37	U	
TRANS-1,2-DICHLOROETHENE	0.1	U	
TRANS-1,3-DICHLOROPROPENE	0.1	U	
TRICHLOROETHENE	10		
TRICHLOROFLUOROMETHANE	0.1	U	
VINYL CHLORIDE	0.09	U	

nsample	05-MW08-I
samp_date	8/18/2005
lab_id	T4308-03
qc_type	NM
units	UG/L
Pct_Solids	0.0
DUP_OF:	

Parameter	Result	Val Qual	Qual Code
1,1,1-TRICHLOROETHANE	0.16	U	
1,1,2,2-TETRACHLOROETHANE	0.09	U	
1,1,2-TRICHLOROETHANE	0.11	U	
1,1,2-TRICHLOROTRIFLUOROETHANE	0.13	U	
1,1-DICHLOROETHANE	0.17	U	
1,1-DICHLOROETHENE	0.19	U	
1,2,4-TRICHLOROBENZENE	0.08	U	
1,2-DIBROMO-3-CHLOROPROPANE	0.2	U	
1,2-DIBROMOETHANE	0.12	U	
1,2-DICHLOROBENZENE	0.08	U	
1,2-DICHLOROETHANE	0.13	U	
1,2-DICHLOROPROPANE	0.15	U	
1,3-DICHLOROBENZENE	0.1	U	
1,4-DICHLOROBENZENE	0.12	U	
2-BUTANONE	0.23	U	
2-HEXANONE	0.57	U	
4-METHYL-2-PENTANONE	0.46	U	
ACETONE	1.6	R	C
BENZENE	0.15	U	
BROMODICHLOROMETHANE	0.14	U	
BROMOFORM	0.09	U	
BROMOMETHANE	0.18	U	
CARBON DISULFIDE	0.11	U	
CARBON TETRACHLORIDE	0.16	U	
CHLOROBENZENE	0.11	U	
CHLORODIBROMOMETHANE	0.13	U	
CHLOROETHANE	0.46	U	
CHLOROFORM	0.16	U	
CHLOROMETHANE	0.08	U	
CIS-1,2-DICHLOROETHENE	0.09	U	
CIS-1,3-DICHLOROPROPENE	0.12	U	
CYCLOHEXANE	0.15	U	

SDG: T4308 MEDIA: WATER DATA FRACTION: OV

nsample	05-MW08-I
samp_date	8/18/2005
lab_id	T4308-03
qc_type	NM
units	UG/L
Pct_Solids	0.0
DUP_OF:	

Parameter	Result	Val Qual	Qual Code
DICHLORODIFLUOROMETHANE	0.12	U	
ETHYLBENZENE	0.11	U	
ISOPROPYLBENZENE	0.12	U	
M+P-XYLENES	0.24	U	
METHYL ACETATE	0.16	U	
METHYL CYCLOHEXANE	0.14	U	
METHYL TERT-BUTYL ETHER	0.22	U	
METHYLENE CHLORIDE	0.42	U	
O-XYLENE	0.13	U	
STYRENE	0.11	U	
TETRACHLOROETHENE	0.12	U	
TOLUENE	0.11	U	
TOTAL XYLENES	0.37	U	
TRANS-1,2-DICHLOROETHENE	0.1	U	
TRANS-1,3-DICHLOROPROPENE	0.1	U	
TRICHLOROETHENE	0.12	U	
TRICHLOROFLUOROMETHANE	0.1	U	
VINYL CHLORIDE	0.09	U	

nsample	DUP-03
samp_date	8/18/2005
lab_id	T4308-06
qc_type	NM
units	UG/L
Pct_Solids	0.0
DUP_OF:	05-MW01-S

Parameter	Result	Val Qual	Qual Code
1,1,2,2-TETRACHLOROETHANE	0.09	U	
1,1,2-TRICHLOROETHANE	22		
1,1,2-TRICHLOROTRIFLUOROETHANE	0.13	U	
1,2,4-TRICHLOROBENZENE	0.08	U	
1,2-DIBROMO-3-CHLOROPROPANE	0.2	U	
1,2-DIBROMOETHANE	0.12	U	
1,2-DICHLOROBENZENE	1.8		
1,2-DICHLOROETHANE	4.1		
1,2-DICHLOROPROPANE	0.15	U	
1,3-DICHLOROBENZENE	0.1	U	
1,4-DICHLOROBENZENE	8.2		
2-BUTANONE	0.23	U	
2-HEXANONE	0.57	U	
4-METHYL-2-PENTANONE	0.46	U	
ACETONE	1.6	R	C
BENZENE	8.8		
BROMODICHLOROMETHANE	0.14	U	
BROMOFORM	0.09	U	
BROMOMETHANE	0.18	U	
CARBON DISULFIDE	0.11	U	
CARBON TETRACHLORIDE	0.16	U	
CHLOROBENZENE	0.11	U	
CHLORODIBROMOMETHANE	0.13	U	
CHLOROETHANE	0.62	J	CP
CHLOROFORM	0.33	J	P
CHLOROMETHANE	0.08	U	
CIS-1,3-DICHLOROPROPENE	0.12	U	
CYCLOHEXANE	0.15	U	
DICHLORODIFLUOROMETHANE	0.12	U	
ETHYLBENZENE	0.11	U	
ISOPROPYLBENZENE	0.12	U	
M+P-XYLENES	0.24	U	

nsample	DUP-03
samp_date	8/18/2005
lab_id	T4308-06
qc_type	NM
units	UG/L
Pct_Solids	0.0
DUP_OF:	05-MW01-S

Parameter	Result	Val Qual	Qual Code
METHYL ACETATE	0.16	U	
METHYL CYCLOHEXANE	2		
METHYL TERT-BUTYL ETHER	0.22	U	
METHYLENE CHLORIDE	1.1	B	B
O-XYLENE	0.13	U	
STYRENE	0.11	U	
TOLUENE	0.11	U	
TOTAL XYLENES	0.37	U	
TRANS-1,2-DICHLOROETHENE	0.93	J	P
TRANS-1,3-DICHLOROPROPENE	0.1	U	
TRICHLOROFLUOROMETHANE	0.1	U	
VINYL CHLORIDE	0.09	U	

PROJ_NO: 2192

SDG: T4308 MEDIA: WATER DATA FRACTION: OV

nsample	DUP-03DL
samp_date	8/18/2005
lab_id	T4308-06DL
qc_type	NM
units	UG/L
Pct_Solids	0.0
DUP_OF:	05-MW01-SDL

Parameter	Result	Val Qual	Qual Code
1,1,1-TRICHLOROETHANE	960		
1,1-DICHLOROETHANE	500		
1,1-DICHLOROETHENE	190		
CIS-1,2-DICHLOROETHENE	270		
TETRACHLOROETHENE	49	J	P
TRICHLOROETHENE	490		

nsample	RB-081805
samp_date	8/18/2005
lab_id	T4308-07
qc_type	NM
units	UG/L
Pct_Solids	0.0
DUP_OF:	

Parameter	Result	Val Qual	Qual Code
1,1,1-TRICHLOROETHANE	0.16	U	
1,1,2,2-TETRACHLOROETHANE	0.09	U	
1,1,2-TRICHLOROETHANE	0.11	U	
1,1,2-TRICHLOROTRIFLUOROETHANE	0.13	U	
1,1-DICHLOROETHANE	0.17	U	
1,1-DICHLOROETHENE	0.19	U	
1,2,4-TRICHLOROBENZENE	0.08	U	
1,2-DIBROMO-3-CHLOROPROPANE	0.2	U	
1,2-DIBROMOETHANE	0.12	U	
1,2-DICHLOROBENZENE	0.08	U	
1,2-DICHLOROETHANE	0.13	U	
1,2-DICHLOROPROPANE	0.15	U	
1,3-DICHLOROBENZENE	0.1	U	
1,4-DICHLOROBENZENE	0.12	U	
2-BUTANONE	0.23	U	
2-HEXANONE	0.57	U	
4-METHYL-2-PENTANONE	0.46	U	
ACETONE	1.6	R	C
BENZENE	0.15	U	
BROMODICHLOROMETHANE	0.14	U	
BROMOFORM	0.09	U	
BROMOMETHANE	0.18	U	
CARBON DISULFIDE	0.11	U	
CARBON TETRACHLORIDE	0.16	U	
CHLOROBENZENE	0.11	U	
CHLORODIBROMOMETHANE	0.13	U	
CHLOROETHANE	0.46	U	
CHLOROFORM	0.16	U	
CHLOROMETHANE	0.08	U	
CIS-1,2-DICHLOROETHENE	0.09	U	
CIS-1,3-DICHLOROPROPENE	0.12	U	
CYCLOHEXANE	0.15	U	

nsample	RB-081805
samp_date	8/18/2005
lab_id	T4308-07
qc_type	NM
units	UG/L
Pct_Solids	0.0
DUP_OF:	

Parameter	Result	Val Qual	Qual Code
DICHLORODIFLUOROMETHANE	0.12	U	
ETHYLBENZENE	0.11	U	
ISOPROPYLBENZENE	0.12	U	
M+P-XYLENES	0.24	U	
METHYL ACETATE	0.16	U	
METHYL CYCLOHEXANE	0.14	U	
METHYL TERT-BUTYL ETHER	0.22	U	
METHYLENE CHLORIDE	32		
O-XYLENE	0.13	U	
STYRENE	0.11	U	
TETRACHLOROETHENE	0.12	U	
TOLUENE	0.11	U	
TOTAL XYLENES	0.37	U	
TRANS-1,2-DICHLOROETHENE	0.1	U	
TRANS-1,3-DICHLOROPROPENE	0.1	U	
TRICHLOROETHENE	0.12	U	
TRICHLOROFLUOROMETHANE	0.1	U	
VINYL CHLORIDE	0.09	U	

SDG: T4308 MEDIA: WATER DATA FRACTION: OV

nsample	TB-081805
samp_date	8/18/2005
lab_id	T4308-01
qc_type	NM
units	UG/L
Pct_Solids	0.0
DUP_OF:	

Parameter	Result	Val Qual	Qual Code
1,1,1-TRICHLOROETHANE	0.16	U	
1,1,2,2-TETRACHLOROETHANE	0.09	U	
1,1,2-TRICHLOROETHANE	0.11	U	
1,1,2-TRICHLOROTRIFLUOROETHANE	0.13	U	
1,1-DICHLOROETHANE	0.17	U	
1,1-DICHLOROETHENE	0.19	U	
1,2,4-TRICHLOROBENZENE	0.08	U	
1,2-DIBROMO-3-CHLOROPROPANE	0.2	U	
1,2-DIBROMOETHANE	0.12	U	
1,2-DICHLOROBENZENE	0.08	U	
1,2-DICHLOROETHANE	0.13	U	
1,2-DICHLOROPROPANE	0.15	U	
1,3-DICHLOROBENZENE	0.1	U	
1,4-DICHLOROBENZENE	0.12	U	
2-BUTANONE	0.23	U	
2-HEXANONE	0.57	U	
4-METHYL-2-PENTANONE	0.46	U	
ACETONE	1.6	R	C
BENZENE	0.15	U	
BROMODICHLOROMETHANE	0.14	U	
BROMOFORM	0.09	U	
BROMOMETHANE	0.18	U	
CARBON DISULFIDE	0.11	U	
CARBON TETRACHLORIDE	0.16	U	
CHLOROBENZENE	0.11	U	
CHLORODIBROMOMETHANE	0.13	U	
CHLOROETHANE	0.46	U	
CHLOROFORM	0.16	U	
CHLOROMETHANE	0.08	U	
CIS-1,2-DICHLOROETHENE	0.09	U	
CIS-1,3-DICHLOROPROPENE	0.12	U	
CYCLOHEXANE	0.15	U	

nsample	TB-081805
samp_date	8/18/2005
lab_id	T4308-01
qc_type	NM
units	UG/L
Pct_Solids	0.0
DUP_OF:	

Parameter	Result	Val Qual	Qual Code
DICHLORODIFLUOROMETHANE	0.12	U	
ETHYLBENZENE	0.11	U	
ISOPROPYLBENZENE	0.12	U	
M+P-XYLENES	0.24	U	
METHYL ACETATE	0.16	U	
METHYL CYCLOHEXANE	0.14	U	
METHYL TERT-BUTYL ETHER	0.22	U	
METHYLENE CHLORIDE	3.5		
O-XYLENE	0.13	U	
STYRENE	0.11	U	
TETRACHLOROETHENE	0.12	U	
TOLUENE	0.11	U	
TOTAL XYLENES	0.37	U	
TRANS-1,2-DICHLOROETHENE	0.1	U	
TRANS-1,3-DICHLOROPROPENE	0.1	U	
TRICHLOROETHENE	0.12	U	
TRICHLOROFLUOROMETHANE	0.1	U	
VINYL CHLORIDE	0.09	U	

PROJECT: 2192

SDG: T4308 MEDIA: WATER DATA FRACTION: OS

nsample	05-MW01-S
samp_date	8/18/2005
lab_id	T4308-04
qc_type	NM
units	UG/L
Pct_Solids	0.0
DUP_OF:	DUP-03

Parameter	Result	Val Qual	Qual Code
1,4-DIOXANE	13		

nsample	05-MW01-SI
samp_date	8/18/2005
lab_id	T4308-05
qc_type	NM
units	UG/L
Pct_Solids	0.0
DUP_OF:	

Parameter	Result	Val Qual	Qual Code
1,4-DIOXANE	2.1	U	

nsample	05-MW08-I
samp_date	8/18/2005
lab_id	T4308-03
qc_type	NM
units	UG/L
Pct_Solids	0.0
DUP_OF:	

Parameter	Result	Val Qual	Qual Code
1,4-DIOXANE	2.1	U	

SDG: T4308 MEDIA: WATER DATA FRACTION: OS

nsample	05-MW08-S
samp_date	8/18/2005
lab_id	T4308-02
qc_type	NM
units	UG/L
Pct_Solids	0.0
DUP_OF:	

Parameter	Result	Val Qual	Qual Code
1,4-DIOXANE	2.1	U	

nsample	DUP-03
samp_date	8/18/2005
lab_id	T4308-06
qc_type	NM
units	UG/L
Pct_Solids	0.0
DUP_OF:	05-MW01-S

Parameter	Result	Val Qual	Qual Code
1,4-DIOXANE	12		

nsample	RB-081805
samp_date	8/18/2005
lab_id	T4308-07
qc_type	NM
units	UG/L
Pct_Solids	0.0
DUP_OF:	

Parameter	Result	Val Qual	Qual Code
1,4-DIOXANE	2.1	U	

SDG: T4384 MEDIA: WATER DATA FRACTION: OV

nsample	05MW13I
samp_date	8/24/2005
lab_id	T4384-04
qc_type	NM
units	UG/L
Pct_Solids	0.0
DUP_OF:	

Parameter	Result	Val Qual	Qual Code
1,1,2,2-TETRACHLOROETHANE	0.09	U	
1,1,2-TRICHLOROETHANE	0.11	U	
1,1,2-TRICHLOROTRIFLUOROETHANE	0.13	U	
1,1-DICHLOROETHANE	29		
1,1-DICHLOROETHENE	29		
1,2,4-TRICHLOROBENZENE	0.08	U	
1,2-DIBROMO-3-CHLOROPROPANE	0.2	R	C
1,2-DIBROMOETHANE	0.12	U	
1,2-DICHLOROBENZENE	0.08	U	
1,2-DICHLOROETHANE	0.13	U	
1,2-DICHLOROPROPANE	0.15	U	
1,3-DICHLOROBENZENE	0.1	U	
1,4-DICHLOROBENZENE	0.12	U	
2-BUTANONE	0.23	U	
2-HEXANONE	0.57	R	C
4-METHYL-2-PENTANONE	0.46	U	
ACETONE	1.6	R	C
BENZENE	0.15	U	
BROMODICHLOROMETHANE	0.14	U	
BROMOFORM	0.09	U	
BROMOMETHANE	0.18	U	
CARBON DISULFIDE	0.11	U	
CARBON TETRACHLORIDE	0.16	U	
CHLOROBENZENE	0.11	U	
CHLORODIBROMOMETHANE	0.13	U	
CHLOROETHANE	0.46	U	
CHLOROFORM	0.16	U	
CHLOROMETHANE	0.08	U	
CIS-1,2-DICHLOROETHENE	4.8		
CIS-1,3-DICHLOROPROPENE	0.12	U	
CYCLOHEXANE	0.15	U	
DICHLORODIFLUOROMETHANE	0.12	U	

nsample	05MW13I
samp_date	8/24/2005
lab_id	T4384-04
qc_type	NM
units	UG/L
Pct_Solids	0.0
DUP_OF:	

Parameter	Result	Val Qual	Qual Code
ETHYLBENZENE	0.11	U	
ISOPROPYLBENZENE	0.12	U	
M+P-XYLENES	0.24	U	
METHYL ACETATE	0.16	U	
METHYL CYCLOHEXANE	0.14	U	
METHYL TERT-BUTYL ETHER	0.22	U	
METHYLENE CHLORIDE	0.42	U	
O-XYLENE	0.13	U	
STYRENE	0.11	U	
TETRACHLOROETHENE	1		
TOLUENE	0.11	U	
TOTAL XYLENES	0.37	U	
TRANS-1,2-DICHLOROETHENE	0.1	U	
TRANS-1,3-DICHLOROPROPENE	0.1	U	
TRICHLOROETHENE	13		
TRICHLOROFLUOROMETHANE	0.1	U	
VINYL CHLORIDE	0.08	U	

nsample	05MW13IDL
samp_date	8/24/2005
lab_id	T4384-04DL
qc_type	NM
units	UG/L
Pct_Solids	0.0
DUP_OF:	

Parameter	Result	Val Qual	Qual Code
1,1,1-TRICHLOROETHANE	28		

PROJ_NO: 2192

SDG: T4384 MEDIA: WATER DATA FRACTION: OV

nsample	05MW14S	nsample	05MW14S	nsample	05MW15I
samp_date	8/24/2005	samp_date	8/24/2005	samp_date	8/24/2005
lab_id	T4384-05	lab_id	T4384-05	lab_id	T4384-02
qc_type	NM	qc_type	NM	qc_type	NM
units	UG/L	units	UG/L	units	UG/L
Pct_Solids	0.0	Pct_Solids	0.0	Pct_Solids	0.0
DUP_OF:		DUP_OF:		DUP_OF:	

Parameter	Result	Val Qual	Qual Code
1,1,1-TRICHLOROETHANE	0.16	UJ	R
1,1,2,2-TETRACHLOROETHANE	0.09	UJ	R
1,1,2-TRICHLOROETHANE	0.11	UJ	R
1,1,2-TRICHLOROTRIFLUOROETHANE	0.13	UJ	R
1,1-DICHLOROETHANE	0.17	UJ	R
1,1-DICHLOROETHENE	0.19	UJ	R
1,2,4-TRICHLOROBENZENE	0.08	UJ	R
1,2-DIBROMO-3-CHLOROPROPANE	0.2	R	C
1,2-DIBROMOETHANE	0.12	UJ	R
1,2-DICHLOROBENZENE	0.08	UJ	R
1,2-DICHLOROETHANE	0.13	UJ	R
1,2-DICHLOROPROPANE	0.15	UJ	R
1,3-DICHLOROBENZENE	0.1	UJ	R
1,4-DICHLOROBENZENE	0.12	UJ	R
2-BUTANONE	0.23	UJ	R
2-HEXANONE	0.57	R	C
4-METHYL-2-PENTANONE	0.46	UJ	R
ACETONE	3.3	J	CPR
BENZENE	0.15	UJ	R
BROMODICHLOROMETHANE	0.14	UJ	R
BROMOFORM	0.09	UJ	R
BROMOMETHANE	0.18	UJ	R
CARBON DISULFIDE	0.11	UJ	R
CARBON TETRACHLORIDE	0.16	UJ	R
CHLOROBENZENE	0.11	UJ	R
CHLORODIBROMOMETHANE	0.13	UJ	R
CHLOROETHANE	0.46	UJ	R
CHLOROFORM	0.16	UJ	R
CHLOROMETHANE	0.08	UJ	R
CIS-1,2-DICHLOROETHENE	0.09	UJ	R
CIS-1,3-DICHLOROPROPENE	0.12	UJ	R
CYCLOHEXANE	0.15	UJ	R

Parameter	Result	Val Qual	Qual Code
DICHLORODIFLUOROMETHANE	0.12	UJ	R
ETHYLBENZENE	0.11	UJ	R
ISOPROPYLBENZENE	0.12	UJ	R
M+P-XYLENES	0.24	UJ	R
METHYL ACETATE	0.16	UJ	R
METHYL CYCLOHEXANE	0.14	UJ	R
METHYL TERT-BUTYL ETHER	0.22	UJ	R
METHYLENE CHLORIDE	0.42	UJ	R
O-XYLENE	0.13	UJ	R
STYRENE	0.11	UJ	R
TETRACHLOROETHENE	0.12	UJ	R
TOLUENE	0.11	UJ	R
TOTAL XYLENES	0.37	UJ	R
TRANS-1,2-DICHLOROETHENE	0.1	UJ	R
TRANS-1,3-DICHLOROPROPENE	0.1	UJ	R
TRICHLOROETHENE	0.12	UJ	R
TRICHLOROFLUOROMETHANE	0.1	UJ	R
VINYL CHLORIDE	0.08	UJ	R

Parameter	Result	Val Qual	Qual Code
1,1,1-TRICHLOROETHANE	2.4		
1,1,2,2-TETRACHLOROETHANE	0.09	U	
1,1,2-TRICHLOROETHANE	0.11	U	
1,1,2-TRICHLOROTRIFLUOROETHANE	0.13	U	
1,1-DICHLOROETHANE	1.4		
1,1-DICHLOROETHENE	1.8		
1,2,4-TRICHLOROBENZENE	0.08	U	
1,2-DIBROMO-3-CHLOROPROPANE	0.2	R	C
1,2-DIBROMOETHANE	0.12	U	
1,2-DICHLOROBENZENE	0.08	U	
1,2-DICHLOROETHANE	0.13	U	
1,2-DICHLOROPROPANE	0.15	U	
1,3-DICHLOROBENZENE	0.1	U	
1,4-DICHLOROBENZENE	0.12	U	
2-BUTANONE	0.23	U	
2-HEXANONE	0.57	U	
4-METHYL-2-PENTANONE	0.46	U	
ACETONE	1.6	R	C
BENZENE	0.15	U	
BROMODICHLOROMETHANE	0.14	U	
BROMOFORM	0.09	U	
BROMOMETHANE	0.18	U	
CARBON DISULFIDE	0.11	U	
CARBON TETRACHLORIDE	0.16	U	
CHLOROBENZENE	0.11	U	
CHLORODIBROMOMETHANE	0.13	U	
CHLOROETHANE	0.46	U	
CHLOROFORM	0.16	U	
CHLOROMETHANE	0.08	U	
CIS-1,2-DICHLOROETHENE	0.09	U	
CIS-1,3-DICHLOROPROPENE	0.12	U	
CYCLOHEXANE	0.15	U	

nsample	05MW15I
samp_date	8/24/2005
lab_id	T4384-02
qc_type	NM
units	UG/L
Pct_Solids	0.0
DUP_OF:	

Parameter	Result	Val Qual	Qual Code
DICHLORODIFLUOROMETHANE	0.12	U	
ETHYLBENZENE	0.11	U	
ISOPROPYLBENZENE	0.12	U	
M+P-XYLENES	0.24	U	
METHYL ACETATE	0.16	U	
METHYL CYCLOHEXANE	0.14	U	
METHYL TERT-BUTYL ETHER	0.22	U	
METHYLENE CHLORIDE	0.42	U	
O-XYLENE	0.13	U	
STYRENE	0.11	U	
TETRACHLOROETHENE	0.12	U	
TOLUENE	0.11	U	
TOTAL XYLENES	0.37	U	
TRANS-1,2-DICHLOROETHENE	0.1	U	
TRANS-1,3-DICHLOROPROPENE	0.1	U	
TRICHLOROETHENE	1		
TRICHLOROFLUOROMETHANE	0.1	U	
VINYL CHLORIDE	0.08	U	

nsample	05MW15S
samp_date	8/24/2005
lab_id	T4384-03
qc_type	NM
units	UG/L
Pct_Solids	0.0
DUP_OF:	

Parameter	Result	Val Qual	Qual Code
1,1,1-TRICHLOROETHANE	0.16	U	
1,1,2,2-TETRACHLOROETHANE	0.09	U	
1,1,2-TRICHLOROETHANE	0.11	U	
1,1,2-TRICHLOROTRIFLUOROETHANE	0.13	U	
1,1-DICHLOROETHANE	0.17	U	
1,1-DICHLOROETHENE	0.19	U	
1,2,4-TRICHLOROBENZENE	0.08	U	
1,2-DIBROMO-3-CHLOROPROPANE	0.2	R	C
1,2-DIBROMOETHANE	0.12	U	
1,2-DICHLOROBENZENE	0.08	U	
1,2-DICHLOROETHANE	0.13	U	
1,2-DICHLOROPROPANE	0.15	U	
1,3-DICHLOROBENZENE	0.1	U	
1,4-DICHLOROBENZENE	0.12	U	
2-BUTANONE	0.23	U	
2-HEXANONE	0.57	R	C
4-METHYL-2-PENTANONE	0.46	U	
ACETONE	1.6	R	C
BENZENE	0.15	U	
BROMODICHLOROMETHANE	0.14	U	
BROMOFORM	0.09	U	
BROMOMETHANE	0.18	U	
CARBON DISULFIDE	0.11	U	
CARBON TETRACHLORIDE	0.16	U	
CHLOROBENZENE	0.11	U	
CHLORODIBROMOMETHANE	0.13	U	
CHLOROETHANE	0.46	U	
CHLOROFORM	0.16	U	
CHLOROMETHANE	0.08	U	
CIS-1,2-DICHLOROETHENE	0.09	U	
CIS-1,3-DICHLOROPROPENE	0.12	U	
CYCLOHEXANE	0.15	U	

nsample	05MW15S
samp_date	8/24/2005
lab_id	T4384-03
qc_type	NM
units	UG/L
Pct_Solids	0.0
DUP_OF:	

Parameter	Result	Val Qual	Qual Code
DICHLORODIFLUOROMETHANE	0.12	U	
ETHYLBENZENE	0.11	U	
ISOPROPYLBENZENE	0.12	U	
M+P-XYLENES	0.24	U	
METHYL ACETATE	0.16	U	
METHYL CYCLOHEXANE	0.14	U	
METHYL TERT-BUTYL ETHER	0.22	U	
METHYLENE CHLORIDE	0.42	U	
O-XYLENE	0.13	U	
STYRENE	0.11	U	
TETRACHLOROETHENE	0.12	U	
TOLUENE	0.11	U	
TOTAL XYLENES	0.37	U	
TRANS-1,2-DICHLOROETHENE	0.1	U	
TRANS-1,3-DICHLOROPROPENE	0.1	U	
TRICHLOROETHENE	0.12	U	
TRICHLOROFLUOROMETHANE	0.1	U	
VINYL CHLORIDE	0.08	U	

SDG: T4384 MEDIA: WATER DATA FRACTION: OV

nsample	TB-082405	nsample	TB-082405
samp_date	8/24/2005	samp_date	8/24/2005
lab_id	T4384-01	lab_id	T4384-01
qc_type	NM	qc_type	NM
units	UG/L	units	UG/L
Pct_Solids	0.0	Pct_Solids	0.0
DUP_OF:		DUP_OF:	

Parameter	Result	Val Qual	Qual Code
1,1,1-TRICHLOROETHANE	0.16	U	
1,1,2,2-TETRACHLOROETHANE	0.09	U	
1,1,2-TRICHLOROETHANE	0.11	U	
1,1,2-TRICHLOROTRIFLUOROETHANE	0.13	U	
1,1-DICHLOROETHANE	0.17	U	
1,1-DICHLOROETHENE	0.19	U	
1,2,4-TRICHLOROBENZENE	0.08	U	
1,2-DIBROMO-3-CHLOROPROPANE	0.2	R	C
1,2-DIBROMOETHANE	0.12	U	
1,2-DICHLOROBENZENE	0.08	U	
1,2-DICHLOROETHANE	0.13	U	
1,2-DICHLOROPROPANE	0.15	U	
1,3-DICHLOROBENZENE	0.1	U	
1,4-DICHLOROBENZENE	0.12	U	
2-BUTANONE	0.23	U	
2-HEXANONE	0.57	R	C
4-METHYL-2-PENTANONE	0.46	U	
ACETONE	1.6	R	C
BENZENE	0.15	U	
BROMODICHLOROMETHANE	0.14	U	
BROMOFORM	0.09	U	
BROMOMETHANE	0.18	U	
CARBON DISULFIDE	0.11	U	
CARBON TETRACHLORIDE	0.16	U	
CHLOROBENZENE	0.11	U	
CHLORODIBROMOMETHANE	0.13	U	
CHLOROETHANE	0.46	U	
CHLOROFORM	0.16	U	
CHLOROMETHANE	0.08	U	
CIS-1,2-DICHLOROETHENE	0.09	U	
CIS-1,3-DICHLOROPROPENE	0.12	U	
CYCLOHEXANE	0.15	U	

Parameter	Result	Val Qual	Qual Code
DICHLORODIFLUOROMETHANE	0.12	U	
ETHYLBENZENE	0.11	U	
ISOPROPYLBENZENE	0.12	U	
M+P-XYLENES	0.24	U	
METHYL ACETATE	0.16	U	
METHYL CYCLOHEXANE	0.14	U	
METHYL TERT-BUTYL ETHER	0.22	U	
METHYLENE CHLORIDE	0.42	U	
O-XYLENE	0.13	U	
STYRENE	0.11	U	
TETRACHLOROETHENE	0.12	U	
TOLUENE	0.11	U	
TOTAL XYLENES	0.37	U	
TRANS-1,2-DICHLOROETHENE	0.1	U	
TRANS-1,3-DICHLOROPROPENE	0.1	U	
TRICHLOROETHENE	0.12	U	
TRICHLOROFLUOROMETHANE	0.1	U	
VINYL CHLORIDE	0.08	U	

SDG: T4384 MEDIA: WATER DATA FRACTION: OVG

nsample	05MW13I
samp_date	8/24/2005
lab_id	T4384-04
qc_type	NM
units	UG/L
Pct_Solids	0.0
DUP_OF:	

Parameter	Result	Val Qual	Qual Code
ETHANE	5	U	
ETHENE	5	U	
METHANE	5	U	

nsample	05MW14S
samp_date	8/24/2005
lab_id	T4384-05
qc_type	NM
units	UG/L
Pct_Solids	0.0
DUP_OF:	

Parameter	Result	Val Qual	Qual Code
ETHANE	5	U	
ETHENE	5	U	
METHANE	5	U	

nsample	05MW15I
samp_date	8/24/2005
lab_id	T4384-02
qc_type	NM
units	UG/L
Pct_Solids	0.0
DUP_OF:	

Parameter	Result	Val Qual	Qual Code
ETHANE	5	U	
ETHENE	5	U	
METHANE	5	U	

PROJ_NO: 2192

SDG: T4384 MEDIA: WATER DATA FRACTION: OVG

nsample	05MW15S
samp_date	8/24/2005
lab_id	T4384-03
qc_type	NM
units	UG/L
Pct_Solids	0.0
DUP_OF:	

Parameter	Result	Val Qual	Qual Code
ETHANE	5	U	
ETHENE	5	U	
METHANE	5	U	

SDG: T4384 MEDIA: WATER DATA FRACTION: OS

nsample	05MW13I
samp_date	8/24/2005
lab_id	T4384-04
qc_type	NM
units	UG/L
Pct_Solids	0.0
DUP_OF:	

Parameter	Result	Val Qual	Qual Code
1,4-DIOXANE	2.1	U	

nsample	05MW14S
samp_date	8/24/2005
lab_id	T4384-05
qc_type	NM
units	UG/L
Pct_Solids	0.0
DUP_OF:	

Parameter	Result	Val Qual	Qual Code
1,4-DIOXANE	2	U	

nsample	05MW15I
samp_date	8/24/2005
lab_id	T4384-02
qc_type	NM
units	UG/L
Pct_Solids	0.0
DUP_OF:	

Parameter	Result	Val Qual	Qual Code
1,4-DIOXANE	2	U	

PROJ_NO: 2192

SDG: T4384 MEDIA: WATER DATA FRACTION: OS

nsample	05MW15S
samp_date	8/24/2005
lab_id	T4384-03
qc_type	NM
units	UG/L
Pct_Solids	0.0
DUP_OF:	

Parameter	Result	Val Qual	Qual Code
1,4-DIOXANE	2	U	

PROJ_NO: 2192

SDG: T4384 MEDIA: WATER DATA FRACTION: MISC

nsample	05MW13I
samp_date	8/24/2005
lab_id	T4384-04
qc_type	NM
Pct_Solids	0.0
DUP_OF:	

Parameter	units	Result	Val Qual	Qual Code
CHLORIDE	MG/L	2.88	L	C
NITRATE	MG/L	0.621		
OXIDATION REDUCTION POTEN	MV	390		
SULFATE	MG/L	29		
TOTAL ORGANIC CARBON	MG/L	0.4	U	

nsample	05MW14S
samp_date	8/24/2005
lab_id	T4384-05
qc_type	NM
Pct_Solids	0.0
DUP_OF:	

Parameter	units	Result	Val Qual	Qual Code
CHLORIDE	MG/L	2.97	L	C
NITRATE	MG/L	0.783		
OXIDATION REDUCTION POTEN	MV	400		
SULFATE	MG/L	43		
TOTAL ORGANIC CARBON	MG/L	0.4	U	

nsample	05MW15I
samp_date	8/24/2005
lab_id	T4384-02
qc_type	NM
Pct_Solids	0.0
DUP_OF:	

Parameter	units	Result	Val Qual	Qual Code
CHLORIDE	MG/L	13	L	C
NITRATE	MG/L	0.791		
OXIDATION REDUCTION POTEN	MV	400		
SULFATE	MG/L	38		
TOTAL ORGANIC CARBON	MG/L	0.621		

PROJ_NO: 2192

SDG: T4384 MEDIA: WATER DATA FRACTION: MISC

nsample	05MW15S
samp_date	8/24/2005
lab_id	T4384-03
qc_type	NM
Pct_Solids	0.0
DUP_OF:	

Parameter	units	Result	Val Qual	Qual Code
CHLORIDE	MG/L	2.64	L	C
NITRATE	MG/L	0.678		
OXIDATION REDUCTION POTEN	MV	410		
SULFATE	MG/L	36		
TOTAL ORGANIC CARBON	MG/L	0.4	U	

PROJECT: 2192

SDG: T4414 MEDIA: WATER DATA FRACTION: OV

nsample	05MW12S
samp_date	8/25/2005
lab_id	T4414-03
qc_type	NM
units	UG/L
Pct_Solids	0.0
DUP_OF:	

Parameter	Result	Val Qual	Qual Code
1,1,1-TRICHLOROETHANE	2.3	J	R
1,1,2,2-TETRACHLOROETHANE	0.09	UJ	R
1,1,2-TRICHLOROETHANE	0.8	J	PR
1,1,2-TRICHLOROTRIFLUOROETHANE	0.13	UJ	R
1,1-DICHLOROETHENE	3	J	R
1,2,4-TRICHLOROBENZENE	0.08	UJ	R
1,2-DIBROMO-3-CHLOROPROPANE	0.2	UJ	R
1,2-DIBROMOETHANE	0.12	UJ	R
1,2-DICHLOROBENZENE	0.08	UJ	R
1,2-DICHLOROETHANE	0.13	UJ	R
1,2-DICHLOROPROPANE	0.15	UJ	R
1,3-DICHLOROBENZENE	0.1	UJ	R
1,4-DICHLOROBENZENE	0.12	UJ	R
2-BUTANONE	0.23	UJ	R
2-HEXANONE	0.57	UJ	R
4-METHYL-2-PENTANONE	0.46	UJ	R
ACETONE	1.6	UJ	R
BENZENE	0.15	UJ	R
BROMODICHLOROMETHANE	0.14	UJ	R
BROMOFORM	0.09	UJ	R
BROMOMETHANE	0.18	UJ	R
CARBON DISULFIDE	0.11	UJ	R
CARBON TETRACHLORIDE	0.16	UJ	R
CHLOROBENZENE	0.11	UJ	R
CHLORODIBROMOMETHANE	0.13	UJ	R
CHLOROETHANE	0.46	UJ	R
CHLOROFORM	0.16	UJ	R
CHLOROMETHANE	0.08	UJ	R
CIS-1,2-DICHLOROETHENE	7.2	J	R
CIS-1,3-DICHLOROPROPENE	0.12	UJ	R
CYCLOHEXANE	0.15	UJ	R
DICHLORODIFLUOROMETHANE	0.12	UJ	R

nsample	05MW12S
samp_date	8/25/2005
lab_id	T4414-03
qc_type	NM
units	UG/L
Pct_Solids	0.0
DUP_OF:	

Parameter	Result	Val Qual	Qual Code
ETHYLBENZENE	0.11	UJ	R
ISOPROPYLBENZENE	0.12	UJ	R
M+P-XYLENES	0.61	J	PR
METHYL ACETATE	0.16	UJ	R
METHYL CYCLOHEXANE	0.14	UJ	R
METHYL TERT-BUTYL ETHER	0.22	UJ	R
METHYLENE CHLORIDE	0.42	UJ	CR
O-XYLENE	0.13	UJ	R
STYRENE	0.11	UJ	R
TETRACHLOROETHENE	1.2	J	CR
TOLUENE	0.65	J	PR
TOTAL XYLENES	0.61	J	PR
TRANS-1,2-DICHLOROETHENE	0.1	UJ	R
TRANS-1,3-DICHLOROPROPENE	0.1	UJ	R
TRICHLOROETHENE	3.7	J	R
TRICHLOROFLUOROMETHANE	0.1	UJ	R
VINYL CHLORIDE	0.09	UJ	R

nsample	05MW12SDL
samp_date	8/25/2005
lab_id	T4414-03DL
qc_type	NM
units	UG/L
Pct_Solids	0.0
DUP_OF:	

Parameter	Result	Val Qual	Qual Code
1,1-DICHLOROETHANE	27		

PROJ_NO: 2192

SDG: T4414 MEDIA: WATER DATA FRACTION: OV

nsample	05MW14I
samp_date	8/25/2005
lab_id	T4414-04
qc_type	NM
units	UG/L
Pct_Solids	0.0
DUP_OF:	DUP-04

Parameter	Result	Val Qual	Qual Code
1,1,1-TRICHLOROETHANE	20		
1,1,2,2-TETRACHLOROETHANE	0.09	U	
1,1,2-TRICHLOROETHANE	0.11	U	
1,1,2-TRICHLOROTRIFLUOROETHANE	0.13	U	
1,1-DICHLOROETHANE	13		
1,1-DICHLOROETHENE	24		
1,2,4-TRICHLOROBENZENE	0.08	U	
1,2-DIBROMO-3-CHLOROPROPANE	0.2	U	
1,2-DIBROMOETHANE	0.12	U	
1,2-DICHLOROBENZENE	0.08	U	
1,2-DICHLOROETHANE	0.13	U	
1,2-DICHLOROPROPANE	0.15	U	
1,3-DICHLOROBENZENE	0.1	U	
1,4-DICHLOROBENZENE	0.12	U	
2-BUTANONE	0.23	U	
2-HEXANONE	0.57	U	
4-METHYL-2-PENTANONE	0.46	U	
ACETONE	1.6	U	
BENZENE	0.15	U	
BROMODICHLOROMETHANE	0.14	U	
BROMOFORM	0.09	U	
BROMOMETHANE	0.18	U	
CARBON DISULFIDE	0.11	U	
CARBON TETRACHLORIDE	0.16	U	
CHLOROBENZENE	0.11	U	
CHLORODIBROMOMETHANE	0.13	U	
CHLOROETHANE	0.46	U	
CHLOROFORM	0.16	U	
CHLOROMETHANE	0.08	U	
CIS-1,2-DICHLOROETHENE	2		
CIS-1,3-DICHLOROPROPENE	0.12	U	
CYCLOHEXANE	0.15	U	

nsample	05MW14I
samp_date	8/25/2005
lab_id	T4414-04
qc_type	NM
units	UG/L
Pct_Solids	0.0
DUP_OF:	DUP-04

Parameter	Result	Val Qual	Qual Code
DICHLORODIFLUOROMETHANE	0.12	U	
ETHYLBENZENE	0.11	U	
ISOPROPYLBENZENE	0.12	U	
M+P-XYLENES	0.24	U	
METHYL ACETATE	0.16	U	
METHYL CYCLOHEXANE	0.14	U	
METHYL TERT-BUTYL ETHER	0.22	U	
METHYLENE CHLORIDE	0.42	UJ	C
O-XYLENE	0.13	U	
STYRENE	0.11	U	
TETRACHLOROETHENE	0.12	U	
TOLUENE	0.11	U	
TOTAL XYLENES	0.37	U	
TRANS-1,2-DICHLOROETHENE	0.1	U	
TRANS-1,3-DICHLOROPROPENE	0.1	U	
TRICHLOROETHENE	7.9		
TRICHLOROFLUOROMETHANE	0.1	U	
VINYL CHLORIDE	0.09	U	

nsample	DUP-04
samp_date	8/25/2005
lab_id	T4414-05
qc_type	NM
units	UG/L
Pct_Solids	0.0
DUP_OF:	05MW14I

Parameter	Result	Val Qual	Qual Code
1,1,1-TRICHLOROETHANE	20		
1,1,2,2-TETRACHLOROETHANE	0.09	U	
1,1,2-TRICHLOROETHANE	0.11	U	
1,1,2-TRICHLOROTRIFLUOROETHANE	0.13	U	
1,1-DICHLOROETHANE	14		
1,1-DICHLOROETHENE	23		
1,2,4-TRICHLOROBENZENE	0.08	U	
1,2-DIBROMO-3-CHLOROPROPANE	0.2	U	
1,2-DIBROMOETHANE	0.12	U	
1,2-DICHLOROBENZENE	0.08	U	
1,2-DICHLOROETHANE	0.13	U	
1,2-DICHLOROPROPANE	0.15	U	
1,3-DICHLOROBENZENE	0.1	U	
1,4-DICHLOROBENZENE	0.12	U	
2-BUTANONE	0.23	U	
2-HEXANONE	0.57	U	
4-METHYL-2-PENTANONE	0.46	U	
ACETONE	1.6	U	
BENZENE	0.15	U	
BROMODICHLOROMETHANE	0.14	U	
BROMOFORM	0.09	U	
BROMOMETHANE	0.18	U	
CARBON DISULFIDE	0.11	U	
CARBON TETRACHLORIDE	0.16	U	
CHLOROBENZENE	0.11	U	
CHLORODIBROMOMETHANE	0.13	U	
CHLOROETHANE	0.46	U	
CHLOROFORM	0.16	U	
CHLOROMETHANE	0.08	U	
CIS-1,2-DICHLOROETHENE	2		
CIS-1,3-DICHLOROPROPENE	0.12	U	
CYCLOHEXANE	0.15	U	

PROJECT: 2192

SDG: T4414 MEDIA: WATER DATA FRACTION: OV

nsample	DUP-04
samp_date	8/25/2005
lab_id	T4414-05
qc_type	NM
units	UG/L
Pct_Solids	0.0
DUP_OF:	05MW14I

Parameter	Result	Val Qual	Qual Code
DICHLORODIFLUOROMETHANE	0.12	U	
ETHYLBENZENE	0.11	U	
ISOPROPYLBENZENE	0.12	U	
M+P-XYLENES	0.24	U	
METHYL ACETATE	0.16	U	
METHYL CYCLOHEXANE	0.14	U	
METHYL TERT-BUTYL ETHER	0.22	U	
METHYLENE CHLORIDE	0.42	UJ	C
O-XYLENE	0.13	U	
STYRENE	0.11	U	
TETRACHLOROETHENE	0.12	U	
TOLUENE	0.11	U	
TOTAL XYLENES	0.37	U	
TRANS-1,2-DICHLOROETHENE	0.1	U	
TRANS-1,3-DICHLOROPROPENE	0.1	U	
TRICHLOROETHENE	7.5		
TRICHLOROFLUOROMETHANE	0.1	U	
VINYL CHLORIDE	0.09	U	

nsample	FB-082505
samp_date	8/25/2005
lab_id	T4414-02
qc_type	NM
units	UG/L
Pct_Solids	0.0
DUP_OF:	

Parameter	Result	Val Qual	Qual Code
1,1,1-TRICHLOROETHANE	0.16	U	
1,1,2,2-TETRACHLOROETHANE	0.09	U	
1,1,2-TRICHLOROETHANE	0.11	U	
1,1,2-TRICHLOROTRIFLUOROETHANE	0.13	U	
1,1-DICHLOROETHANE	0.17	U	
1,1-DICHLOROETHENE	0.19	U	
1,2,4-TRICHLOROBENZENE	0.08	U	
1,2-DIBROMO-3-CHLOROPROPANE	0.2	U	
1,2-DIBROMOETHANE	0.12	U	
1,2-DICHLOROBENZENE	0.08	U	
1,2-DICHLOROETHANE	0.13	U	
1,2-DICHLOROPROPANE	0.15	U	
1,3-DICHLOROBENZENE	0.1	U	
1,4-DICHLOROBENZENE	0.12	U	
2-BUTANONE	0.23	U	
2-HEXANONE	0.57	U	
4-METHYL-2-PENTANONE	0.46	U	
ACETONE	1.6	U	
BENZENE	0.15	U	
BROMODICHLOROMETHANE	0.14	U	
BROMOFORM	0.09	U	
BROMOMETHANE	0.18	U	
CARBON DISULFIDE	0.11	U	
CARBON TETRACHLORIDE	0.16	U	
CHLOROBENZENE	0.11	U	
CHLORODIBROMOMETHANE	0.13	U	
CHLOROETHANE	0.46	U	
CHLOROFORM	0.16	U	
CHLOROMETHANE	0.08	U	
CIS-1,2-DICHLOROETHENE	0.09	U	
CIS-1,3-DICHLOROPROPENE	0.12	U	
CYCLOHEXANE	0.15	U	

nsample	FB-082505
samp_date	8/25/2005
lab_id	T4414-02
qc_type	NM
units	UG/L
Pct_Solids	0.0
DUP_OF:	

Parameter	Result	Val Qual	Qual Code
DICHLORODIFLUOROMETHANE	0.12	U	
ETHYLBENZENE	0.11	U	
ISOPROPYLBENZENE	0.12	U	
M+P-XYLENES	0.24	U	
METHYL ACETATE	0.16	U	
METHYL CYCLOHEXANE	0.14	U	
METHYL TERT-BUTYL ETHER	0.22	U	
METHYLENE CHLORIDE	33	J	C
O-XYLENE	0.13	U	
STYRENE	0.11	U	
TETRACHLOROETHENE	0.12	U	
TOLUENE	0.11	U	
TOTAL XYLENES	0.37	U	
TRANS-1,2-DICHLOROETHENE	0.1	U	
TRANS-1,3-DICHLOROPROPENE	0.1	U	
TRICHLOROETHENE	0.12	U	
TRICHLOROFLUOROMETHANE	0.1	U	
VINYL CHLORIDE	0.09	U	

PROJ_NO: 2192

SDG: T4414 MEDIA: WATER DATA FRACTION: OV

nsample	RB-082505
samp_date	8/25/2005
lab_id	T4414-06
qc_type	NM
units	UG/L
Pct_Solids	0.0
DUP_OF:	

Parameter	Result	Val Qual	Qual Code
1,1,1-TRICHLOROETHANE	0.16	U	
1,1,2,2-TETRACHLOROETHANE	0.09	U	
1,1,2-TRICHLOROETHANE	0.11	U	
1,1,2-TRICHLOROTRIFLUOROETHANE	0.13	U	
1,1-DICHLOROETHANE	0.17	U	
1,1-DICHLOROETHENE	0.19	U	
1,2,4-TRICHLOROBENZENE	0.08	U	
1,2-DIBROMO-3-CHLOROPROPANE	0.2	U	
1,2-DIBROMOETHANE	0.12	U	
1,2-DICHLOROBENZENE	0.08	U	
1,2-DICHLOROETHANE	0.13	U	
1,2-DICHLOROPROPANE	0.15	U	
1,3-DICHLOROBENZENE	0.1	U	
1,4-DICHLOROBENZENE	0.12	U	
2-BUTANONE	0.23	U	
2-HEXANONE	0.57	U	
4-METHYL-2-PENTANONE	0.46	U	
ACETONE	1.6	U	
BENZENE	0.15	U	
BROMODICHLOROMETHANE	0.14	U	
BROMOFORM	0.09	U	
BROMOMETHANE	0.18	U	
CARBON DISULFIDE	0.11	U	
CARBON TETRACHLORIDE	0.16	U	
CHLOROBENZENE	0.11	U	
CHLORODIBROMOMETHANE	0.13	U	
CHLOROETHANE	0.46	U	
CHLOROFORM	0.16	U	
CHLOROMETHANE	0.08	U	
CIS-1,2-DICHLOROETHENE	0.09	U	
CIS-1,3-DICHLOROPROPENE	0.12	U	
CYCLOHEXANE	0.15	U	

nsample	RB-082505
samp_date	8/25/2005
lab_id	T4414-06
qc_type	NM
units	UG/L
Pct_Solids	0.0
DUP_OF:	

Parameter	Result	Val Qual	Qual Code
DICHLORODIFLUOROMETHANE	0.12	U	
ETHYLBENZENE	0.11	U	
ISOPROPYLBENZENE	0.12	U	
M+P-XYLENES	0.24	U	
METHYL ACETATE	0.16	U	
METHYL CYCLOHEXANE	0.14	U	
METHYL TERT-BUTYL ETHER	0.22	U	
METHYLENE CHLORIDE	0.42	UJ	C
O-XYLENE	0.13	U	
STYRENE	0.11	U	
TETRACHLOROETHENE	0.12	U	
TOLUENE	0.11	U	
TOTAL XYLENES	0.37	U	
TRANS-1,2-DICHLOROETHENE	0.1	U	
TRANS-1,3-DICHLOROPROPENE	0.1	U	
TRICHLOROETHENE	0.12	U	
TRICHLOROFLUOROMETHANE	0.1	U	
VINYL CHLORIDE	0.09	U	

nsample	TB-082505
samp_date	8/25/2005
lab_id	T4414-01
qc_type	NM
units	UG/L
Pct_Solids	0.0
DUP_OF:	

Parameter	Result	Val Qual	Qual Code
1,1,1-TRICHLOROETHANE	0.16	U	
1,1,2,2-TETRACHLOROETHANE	0.09	U	
1,1,2-TRICHLOROETHANE	0.11	U	
1,1,2-TRICHLOROTRIFLUOROETHANE	0.13	U	
1,1-DICHLOROETHANE	0.17	U	
1,1-DICHLOROETHENE	0.19	U	
1,2,4-TRICHLOROBENZENE	0.08	U	
1,2-DIBROMO-3-CHLOROPROPANE	0.2	U	
1,2-DIBROMOETHANE	0.12	U	
1,2-DICHLOROBENZENE	0.08	U	
1,2-DICHLOROETHANE	0.13	U	
1,2-DICHLOROPROPANE	0.15	U	
1,3-DICHLOROBENZENE	0.1	U	
1,4-DICHLOROBENZENE	0.12	U	
2-BUTANONE	0.23	U	
2-HEXANONE	0.57	U	
4-METHYL-2-PENTANONE	0.46	U	
ACETONE	1.6	U	
BENZENE	0.15	U	
BROMODICHLOROMETHANE	0.14	U	
BROMOFORM	0.09	U	
BROMOMETHANE	0.18	U	
CARBON DISULFIDE	0.11	U	
CARBON TETRACHLORIDE	0.16	U	
CHLOROBENZENE	0.11	U	
CHLORODIBROMOMETHANE	0.13	U	
CHLOROETHANE	0.46	U	
CHLOROFORM	0.16	U	
CHLOROMETHANE	0.08	U	
CIS-1,2-DICHLOROETHENE	0.09	U	
CIS-1,3-DICHLOROPROPENE	0.12	U	
CYCLOHEXANE	0.15	U	

PROJ_NO: 2192

SDG: T4414 MEDIA: WATER DATA FRACTION: OV

nsample	TB-082505
samp_date	8/25/2005
lab_id	T4414-01
qc_type	NM
units	UG/L
Pct_Solids	0.0
DUP_OF:	

Parameter	Result	Val Qual	Qual Code
DICHLORODIFLUOROMETHANE	0.12	U	
ETHYLBENZENE	0.11	U	
ISOPROPYLBENZENE	0.12	U	
M+P-XYLENES	0.24	U	
METHYL ACETATE	0.16	U	
METHYL CYCLOHEXANE	0.14	U	
METHYL TERT-BUTYL ETHER	0.22	U	
METHYLENE CHLORIDE	1.2	J	C
O-XYLENE	0.13	U	
STYRENE	0.11	U	
TETRACHLOROETHENE	0.12	U	
TOLUENE	0.11	U	
TOTAL XYLENES	0.37	U	
TRANS-1,2-DICHLOROETHENE	0.1	U	
TRANS-1,3-DICHLOROPROPENE	0.1	U	
TRICHLOROETHENE	0.12	U	
TRICHLOROFLUOROMETHANE	0.1	U	
VINYL CHLORIDE	0.09	U	

SDG: T4414 MEDIA: WATER DATA FRACTION: OVG

nsample	05MW12S	nsample	05MW14I
samp_date	8/25/2005	samp_date	8/25/2005
lab_id	T4414-03	lab_id	T4414-04
qc_type	NM	qc_type	NM
units	UG/L	units	UG/L
Pct_Solids	0.0	Pct_Solids	0.0
DUP_OF:		DUP_OF:	

Parameter	Result	Val Qual	Qual Code
ETHANE	5	U	
ETHENE	5	U	
METHANE	5	U	

Parameter	Result	Val Qual	Qual Code
ETHANE	5	U	
ETHENE	5	U	
METHANE	5	U	

PROJECT: 2192

SDG: T4414 MEDIA: WATER DATA FRACTION: OS

nsample	05MW12S
samp_date	8/25/2005
lab_id	T4414-03
qc_type	NM
units	UG/L
Pct_Solids	0.0
DUP_OF:	

Parameter	Result	Val Qual	Qual Code
1,4-DIOXANE	2	U	

nsample	05MW14I
samp_date	8/25/2005
lab_id	T4414-04
qc_type	NM
units	UG/L
Pct_Solids	0.0
DUP_OF:	DUP-04

Parameter	Result	Val Qual	Qual Code
1,4-DIOXANE	2.1	U	

nsample	DUP-04
samp_date	8/25/2005
lab_id	T4414-05
qc_type	NM
units	UG/L
Pct_Solids	0.0
DUP_OF:	05MW14I

Parameter	Result	Val Qual	Qual Code
1,4-DIOXANE	2	U	

PROJ_NO: 2192

SDG: T4414 MEDIA: WATER DATA FRACTION: OS

nsample	FB-082505	nsample	RB-082505
samp_date	8/25/2005	samp_date	8/25/2005
lab_id	T4414-02	lab_id	T4414-06
qc_type	NM	qc_type	NM
units	UG/L	units	UG/L
Pct_Solids	0.0	Pct_Solids	0.0
DUP_OF:		DUP_OF:	

Parameter	Result	Val Qual	Qual Code
1,4-DIOXANE	2	U	

Parameter	Result	Val Qual	Qual Code
1,4-DIOXANE	2	U	

PROJ_NO: 2192

SDG: T4414 MEDIA: WATER DATA FRACTION: MISC

nsample	05MW12S
samp_date	8/25/2005
lab_id	T4414-03
qc_type	NM
Pct_Solids	0.0
DUP_OF:	

Parameter	units	Result	Val Qual	Qual Code
CHLORIDE	MG/L	3.52		
NITRATE	MG/L	0.613		
OXIDATION REDUCTION POTEN	MV	390		
SULFATE	MG/L	29		
TOTAL ORGANIC CARBON	MG/L	0.4	U	

nsample	05MW14I
samp_date	8/25/2005
lab_id	T4414-04
qc_type	NM
Pct_Solids	0.0
DUP_OF:	

Parameter	units	Result	Val Qual	Qual Code
CHLORIDE	MG/L	3.72		
NITRATE	MG/L	0.481		
OXIDATION REDUCTION POTEN	MV	400		
SULFATE	MG/L	28		
TOTAL ORGANIC CARBON	MG/L	0.419		

Data Qualifier Key:

B	- Positive result is considered to be an artifact of blank contamination and should not be considered present.
J	- Value is considered estimated due to exceedance of technical quality control or because result is less than the Contract Required Quantitation Limit (CRQL).
L	- Positive result is considered biased low due to exceedance of technical quality control criteria.
R	- Positive result is considered unusable due to exceedance of technical quality control criteria.
U	- Value is a non-detected result as reported by the laboratory.
UJ	- Non-detected result is considered estimated due to exceedance of technical quality control criteria.
UL	- Non-detected result is considered biased low due to exceedance of technical quality control criteria.

Qualifier Codes:

a = Lab Blank Contamination
b = Field Blank Contamination
c = Calibration (i.e., %RSDs, %Ds, ICVs, CCVs, RPDs, RRFs, etc.) Noncompliance
d = MS/MSD Noncompliance
e = LSC/LSCD Noncompliance
f = Laboratory Duplicate Imprecision
g = Field Duplicate Imprecision
h = Holding Time Exceedance
i = ICP Serial Dilution Noncompliance
j = GFAA PDS – GFAA MSA's r<0.995 (correlation coefficient)
k = ICP Interference – include ICSAB %Rs
l = Instrument Calibration Range Exceedance
m = Sample Preservation
n = Internal Standard Noncompliance
o = Poor Instrument Performance (i.e. baseline drifting)
p = Uncertainty Near Detection Limit (<2 x IDL for inorganics and < CRQL for organics)
q = Other Problems (can encompass of number of issues)
r = Surrogates Recovery Noncompliance
s = Pesticide/PCB Resolution
t = % Breakdown Noncompliance for DDT and Endrin
u = Pesticide/PCB % Difference Between Columns for Positive Results
v = Non-linear Calibrations, Tuning r <0.995 (correlation coefficient)

PRELIMINARY GROUNDWATER VOC/SVOC ANALYTICAL RESULTS
NASJRB WILLOW GROVE, PA
Site 1 and 3 - January-February 2006

Well ID	Date Sampled	Acetone	CCl4	Chloroform	1,1-DCA	1,1-DCE	cis-1,2-DCE	Methylene Chloride	MTBE	Styrene	PCE	1,1,1-TCA	TCE	1,1,2-Trichloro-1,2,2-trifluoroethane	Toluene	Phenanthene	Naphthalene
03MW08D	30-Jan-06	ND	ND	ND	5.9	2.5	0.90 J	ND	ND	ND	0.78 J	3.0	1.5	ND	0.19 J	0.11 J	ND
03MW08S	30-Jan-06	ND	ND	ND	ND	ND	ND	ND	ND	ND	ND	ND	ND	ND	ND	0.098 J	0.057 J
03MW07S	31-Jan-06	ND	ND	ND	ND	ND	ND	1.1 B	ND	ND	1.4	ND	0.37 J	0.37 J	ND	-	-
03MW02I	1-Feb-06	3.4 J	0.27 J	ND	ND	ND	ND	1.7 B	ND	ND	2.4	ND	0.36 J	ND	0.50 J	-	-
03MW02SI	1-Feb-06	ND	0.32 J	ND	ND	ND	ND	1.9 B	ND	ND	1.9	ND	0.59 J	ND	0.20 J	-	-
03MW01S	3-Feb-06	ND	ND	ND	ND	ND	ND	ND	ND	ND	0.90 J	ND	ND	ND	ND	-	-
03MW01SI	3-Feb-06	ND	ND	ND	ND	ND	ND	ND	ND	ND	4.9	ND	ND	ND	ND	-	-
03MW05I	3-Feb-06	ND	ND	ND	ND	ND	ND	ND	ND	ND	0.70 J	ND	ND	ND	ND	-	-
03MW05S	3-Feb-06	ND	ND	ND	ND	ND	ND	ND	ND	ND	0.67 J	ND	ND	ND	ND	-	-
03MW01I	6-Feb-06	ND	ND	ND	ND	ND	ND	ND	ND	ND	0.23 J	ND	ND	ND	0.20 J	-	-
03MW02S	6-Feb-06	ND	ND	ND	ND	ND	ND	ND	ND	ND	ND	ND	ND	ND	ND	-	-
03MW06I	6-Feb-06	ND	ND	ND	ND	ND	ND	ND	ND	ND	0.79 J	ND	ND	ND	0.22 J	-	-
03MW06S	6-Feb-06	ND	ND	ND	ND	ND	ND	ND	ND	ND	1.3	ND	ND	ND	ND	-	-
03MW06SI	7-Feb-06	ND	ND	ND	ND	ND	ND	ND	ND	ND	ND	ND	ND	ND	ND	-	-
03MW03S	8-Feb-06	ND	ND	ND	ND	ND	ND	ND	ND	ND	**14**	ND	ND	ND	ND	-	-
03MW03SI	8-Feb-06	ND	ND	ND	ND	ND	ND	ND	ND	ND	**12**	ND	ND	ND	ND	-	-
03MW04I	10-Feb-06	ND	ND	ND	ND	ND	ND	ND	ND	ND	0.52 J	ND	ND	ND	ND	-	-
03MW04S	10-Feb-06	ND	ND	0.40 J	ND	ND	ND	ND	ND	ND	**8.8**	ND	ND	ND	ND	-	-
03MW04SI	10-Feb-06	ND	ND	0.32 J	ND	ND	ND	ND	0.45 J	ND	**10**	ND	ND	ND	ND	-	-
01MW10S	2-Feb-06	ND	ND	4.5	ND	ND	2.6	3.0 B	ND	ND	**20**	ND	3.2	ND	0.24 J	-	-
01MW10D	3-Feb-06	2.6 J	ND	0.47 J	ND	ND	0.59 J	1.0 B	ND	ND	3.0	ND	0.88 J	ND	0.33 J	-	-
01MW09	7-Feb-06	ND	0.30 J	1.2	ND	ND	2.8	ND	ND	ND	**6.8**	ND	3.8	ND	ND	-	-
FD-1(03MW08S)	30-Jan-06	ND	ND	ND	ND	ND	ND	ND	ND	ND	ND	ND	ND	ND	ND	0.15J	ND
FD-2 (03MW02S)	6-Feb-06	ND	ND	ND	ND	ND	ND	ND	ND	ND	ND	ND	ND	ND	ND	-	-
FD-3 (03MW04S)	10-Feb-06	ND	ND	0.17 J	ND	ND	ND	ND	ND	ND	**9.1**	ND	ND	ND	ND	-	-
RB01300601	30-Jan-06	ND	ND	ND	ND	ND	ND	ND	ND	ND	ND	ND	ND	ND	ND	0.051 J	0.10 J
RB01310602	31-Jan-06	ND	ND	ND	ND	ND	ND	2.1 B	ND	0.60 J	ND	ND	0.45 J	ND	0.56 J	-	-
RB02010603	1-Feb-06	3.0 J	ND	ND	ND	ND	ND	2.6 B	ND	ND	ND	ND	0.37 J	ND	0.52 J	-	-
RB02020604	2-Feb-06	ND	ND	ND	ND	ND	ND	2.4 B	ND	0.53 J	ND	ND	0.40 J	ND	0.51 J	-	-
RB02030605	3-Feb-06	ND	ND	ND	ND	ND	ND	ND	ND	ND	ND	ND	ND	ND	0.22 J	-	-
RB02060606	6-Feb-06	ND	ND	ND	ND	ND	ND	ND	ND	ND	ND	ND	ND	ND	ND	-	-
RB02070607	7-Feb-06	ND	ND	ND	ND	ND	ND	ND	ND	0.67 J	ND	ND	ND	ND	0.45 J	-	-
RB02080608	8-Feb-06	ND	ND	ND	ND	ND	ND	ND	ND	ND	ND	ND	ND	ND	ND	-	-
RB02100609	10-Feb-06	ND	ND	ND	ND	ND	ND	ND	ND	ND	ND	ND	ND	ND	ND	-	-
Trip Blank	2-Feb-06	2.7 J	ND	ND	ND	ND	ND	3.2 B	ND	0.65 J	ND	ND	0.45 J	ND	0.47 J	-	-
Trip Blank	7-Feb-06	ND	ND	ND	ND	ND	ND	ND	ND	ND	ND	ND	ND	ND	ND	-	-
Trip Blank	10-Feb-06	ND	ND	ND	ND	ND	ND	ND	ND	ND	ND	ND	ND	ND	ND	-	-

Notes:
Only analytes detected in at least one sample are included on the table.
ND: Compound Not Detected
J : Es[illegible]d value
B : [illegible] was also found in the associated lab blank