N00109.AR.002604
NWS YORKTOWN
5090.3a

FINA TIER II SAMPLING AND ANALYSIS PLAN FOR AREA OF CONCERN 8 AREA SOUTH OF SITE 7 REMEDIAL INVESTIGATION NWS YORKTOWN VA

6/1/2013

CH2M HILL

Title and Approval Page

Final
Tier II Sampling and Analysis Plan

AOC 8 – Area South of Site 7
Remedial Investigation

Naval Weapons Station Yorktown Cheatham Annex
Williamsburg, Virginia

Contract Task Order 055

June 2013

Prepared for:

Department of the Navy
Naval Facilities Engineering Command
Mid-Atlantic

Under the

NAVFAC CLEAN 1000 Program
Contract N62470-08-D-1000

Prepared by:

CH2MHILL®

This page intentionally left blank.

Signature Page

Quality Assurance Approval:

*

NAVFAC Chemist / Date

Quality Assurance Review:

9-18-13

Doug Bitterman
CH2M HILL Activity Quality Manager / Date

Other Approvals:

9-18-13

Scott Park
NAVFAC Remedial Project Manager / Date

9-18-13

Gerald Hoover
USEPA Remedial Project Manager / Date

09/18/2013

Wade Smith
VDEQ Remedial Project Manager / Date

*Pre-draft digitally signed by Kenneth Bowers, June 22, 2012.
*Red-Line draft final digitally signed by Kenneth Bowers, May 9, 2013

This page intentionally left blank.

Executive Summary

This Remedial Investigation (RI) Sampling and Analysis Plan (SAP) was prepared by the United States Department of the Navy (Navy), Naval Facilities Engineering Command (NAVFAC) Mid-Atlantic Division, under the Comprehensive Long-term Environmental Action—Navy (CLEAN) 1000 Contract, Contract Task Order (CTO) 055, for submittal to NAVFAC, the United States Environmental Protection Agency (USEPA) Region 3, and the Virginia Department of Environmental Quality (VDEQ). The Navy, USEPA, and VDEQ work jointly as the Cheatham Annex (CAX) Partnering Team. This SAP was written in accordance with the Uniform Federal Policy (UFP) for Quality Assurance Project Plans guidance document (USEPA, 2005) using the modified Tier II format.

CAX encompasses 2,300 acres east of Williamsburg, Virginia, between Interstate 64 and the York River on the York-James Peninsula (**Figure 1**). The majority of CAX is undeveloped and heavily wooded. Major surface water features at CAX consist of Cheatham Pond, Jones Mill Pond, and Penniman Lake, and the base is adjacent to the York River. Area of Concern (AOC) 8, identified as the Area South of Site 7, is approximately 1.5 acres in size and located within a bermed area along the York River, northeast of the intersection of Chase and Lynch Roads (**Figure 2**). The site consists of surface and buried debris, with gravel and ballast rock on the ground surface. In a small area of the site, buried debris (pipe, metal, and wood) is visible within the side of the berm.

This SAP details various aspects of the environmental investigation process that will serve as guidelines for the field sampling event to gather the required soil and groundwater data to conduct the RI, which will incorporate the newly collected data and existing historical data. This document will ensure that collected environmental data are scientifically sound, of known and documented quality, and suitable for intended uses. The laboratory information cited in **Appendix A** of this SAP is specific to the laboratories that were selected based on a competitive selection process and possesses the necessary Department of Defense (DoD) Environmental Laboratory Accreditation Program (ELAP) certification for the analytical methods required by this project. In the event of changes, revisions will be submitted to the CAX Partnering Team prior to commencement of fieldwork.

This page intentionally left blank.

Contents

Title and Approval Page **1**

Acronyms and Abbreviations **9**

1 Project Organization **13**
1.1 Project Organization Chart 13
1.2 Communication Pathways 14

2 Project Approach **17**
2.1 Project Planning Sessions Participant Sheet 17
2.1.1 November 2011 Scoping Session 17
2.1.2 January 2012 Scoping Session 19
2.2 Conceptual Site Model 21
2.2.1 Site Background and History 21
2.2.2 Physical Setting 22
2.2.3 Distribution of Contamination 22
2.2.4 Release History 23
2.2.5 Potential Migration Pathways 23
2.2.6 Potential Exposure and Receptor Pathways 23
2.3 Data Quality Objectives and Systematic Planning Process Statements 24
2.3.1 Project Statement and Objectives 24
2.3.2 Data Quality Objectives 24
2.3.3 What are the environmental questions to be answered? 27
2.3.4 Project Action Limits 30
2.3.5 How will the data be used? 30
2.3.6 What types of data are needed? 31
2.3.7 Are there any special data quality needs, field or laboratory, in order to support environmental decisions? 31
2.3.8 Where, when, and how should the data be collected or generated? 31
2.3.9 How will the data be evaluated? 31
2.3.10 How will the data usability be documented? 32
2.3.11 Data Verification and Validation (Steps I and IIa/IIb) Process Table 32
2.4 Field Quality Control Samples 35
2.5 Sampling Design and Rationale 37

3 Field Project Implementation **41**
3.1 Field Project Tasks 41
3.1.1 Project Logistics 41
3.1.2 Field Project Tasks 41
3.2 Field SOPs Reference Table 45
3.3 Sample Details Table 47

4 References **51**

Appendixes
A Laboratory-Specific Information
B Site Inspection Exceedance Figures
C Field Standard Operating Procedures
D Laboratory DoD ELAP Certifications Tables

Tables

1-1 Communication Pathways
2-1 November 2011 Scoping Session
2-2 January 2012 Scoping Session
2-3 March 2013 Scoping Session
2-4 Data Verification and Validation (Steps I and IIa/IIb) Process Table
2-5A Measurement Performance Criteria Table for Field QC Samples
2-5B Measurement Performance Criteria Table for Field QC Samples
2-5C Measurement Performance Criteria Table for Field QC Samples
2-5D Measurement Performance Criteria Table for Field QC Samples
2-5E Measurement Performance Criteria Table for Field QC Samples
2-5F Measurement Performance Criteria Table for Field QC Samples
2-5G Measurement Performance Criteria Table for Field QC Samples
2-6 AOC 8 Proposed Sampling Scheme and Associated Rationale

3-1 Field SOPs Reference Table
3-2 Sample Details Table

Figures

1 Base Location Map
2 AOC 8 Site Map
3 AOC 8 Conceptual Site Model
4 AOC 8 Site Inspection Sampling Locations
5 AOC 8 Extent of Buried Debris and Proposed Test Pit Locations
6 AOC 8 Decision Tree
7 Proposed Sampling Locations

Charts

1-1 Project Organizational Chart

Acronyms and Abbreviations

°C	degree Celsius
µg/L	microgram per liter
µg/kg	microgram per kilogram
µm	micrometer
%R	percent range
AM	Activity Manager
AOC	Area of Concern
AQM	Activity Quality Manager
bgs	below ground surface
BTAG	Biological Technical Assistance Group
CA	corrective action
ALS	ALS Environmental
CAX	Cheatham Annex
CLEAN	Comprehensive Long-term Environmental Action—Navy
COC	constituent of concern
COPC	constituent of potential concern
CSM	conceptual site model
CTO	Contract Task Order
CVAA	cold vapor atomic absorption
DL	detection limit
DO	dissolved oxygen
DoD	Department of Defense
DPT	direct-push technology
DQI	data quality indicator
DQO	data quality objective
DV	Data Validator
ELAP	Environmental Laboratory Accreditation Program
ENCO	Environmental Conservation Laboratories, Inc.
ERA	Ecological Risk Assessment
ESV	ecological screening value
FID	flame ionization detector
FTL	Field Team Leader
g	gram
GC/ECD	gas chromatography/electron capture detection
GC/MS	gas chromatography/mass spectrometry
HASP	Health and Safety Plan
HHRA	Human Health Risk Assessment
HMW	high molecular weight
HQ	hazard quotient
HSM	Health and Safety Manager

IC	ion chromatography
ICAL	initial calibration
ICP-AES	inductively coupled plasma-atomic emission spectroscopy
ICP-MS	inductively coupled plasma-mass spectrometry
ICS	Interference check solution
ID	Identification
IDW	investigation-derived waste
IS	Internal Standards
Kemron	Kemron Environmental Services, Inc.
LCL	lower criteria limit
LCS	laboratory control sample
LIMS	Laboratory Information Management System
LMW	low molecular weight
LOD	limit of detection
LOQ	limit of quantification
MCL	Maximum Contaminant Level
mg/kg	milligram per kilogram
ml	milliliter
mm	millimeter
MPC	Measurement Performance Criteria
MS/MSD	matrix spike/matrix spike duplicate
MTBE	methyl-tert-butyl ether
NA	not applicable
NAIP	natural attenuation indicator parameter
NAVFAC	Naval Facilities Engineering Command
Navy	Department of the Navy
NC	No Criterion
NTR	Navy Technical Representative
ORP	Oxidation Reduction Potential
PAH	polycyclic aromatic hydrocarbon
PAL	Project Action Limit
PC	Project Chemist
PCB	polychlorinated biphenyl
PCE	tetrachloroethene
PDM	Project Data Manager
PID	photoionization detector
PIL	project indicator limit
PM	Project Manager
POC	point of contact
PPE	personal protective equipment
PS	post spike
PSLP	Penniman Shell Loading Plant
PVC	polyvinyl chloride
QA	quality assurance
QAO	Quality Assurance Officer
QC	quality control

QL	quantitation limit
QSM	Quality Systems Manual
RI	Remedial Investigation
RPD	relative percent difference
RPM	Remedial Project Manager
RSL	Regional Screening Level
SAP	Sampling and Analysis Plan
SI	Site Inspection
SOP	Standard Operating Procedure
STC	Senior Technical Consultant
SVOC	semivolatile organic compound
TBD	to be determined
TCD	Thermal Conductivity Detector
TCLP	Toxicity Characteristic Leaching Procedure
TOC	total organic carbon
UCL	upper confidence limit
UFP	Uniform Federal Policy
UPC	Universal Product Code
USEPA	United States Environmental Protection Agency
UTL	upper tolerance limit
VDEQ	Virginia Department of Environmental Quality
VOA	volatile organic analyte
VOC	volatile organic compound
WWI	World War I

This page intentionally left blank.

1 Project Organization

1.1 Project Organization Chart

The project organization chart (Chart 1) includes lines of authority and lines of communication.

CHART 1-1
Project Organizational Chart

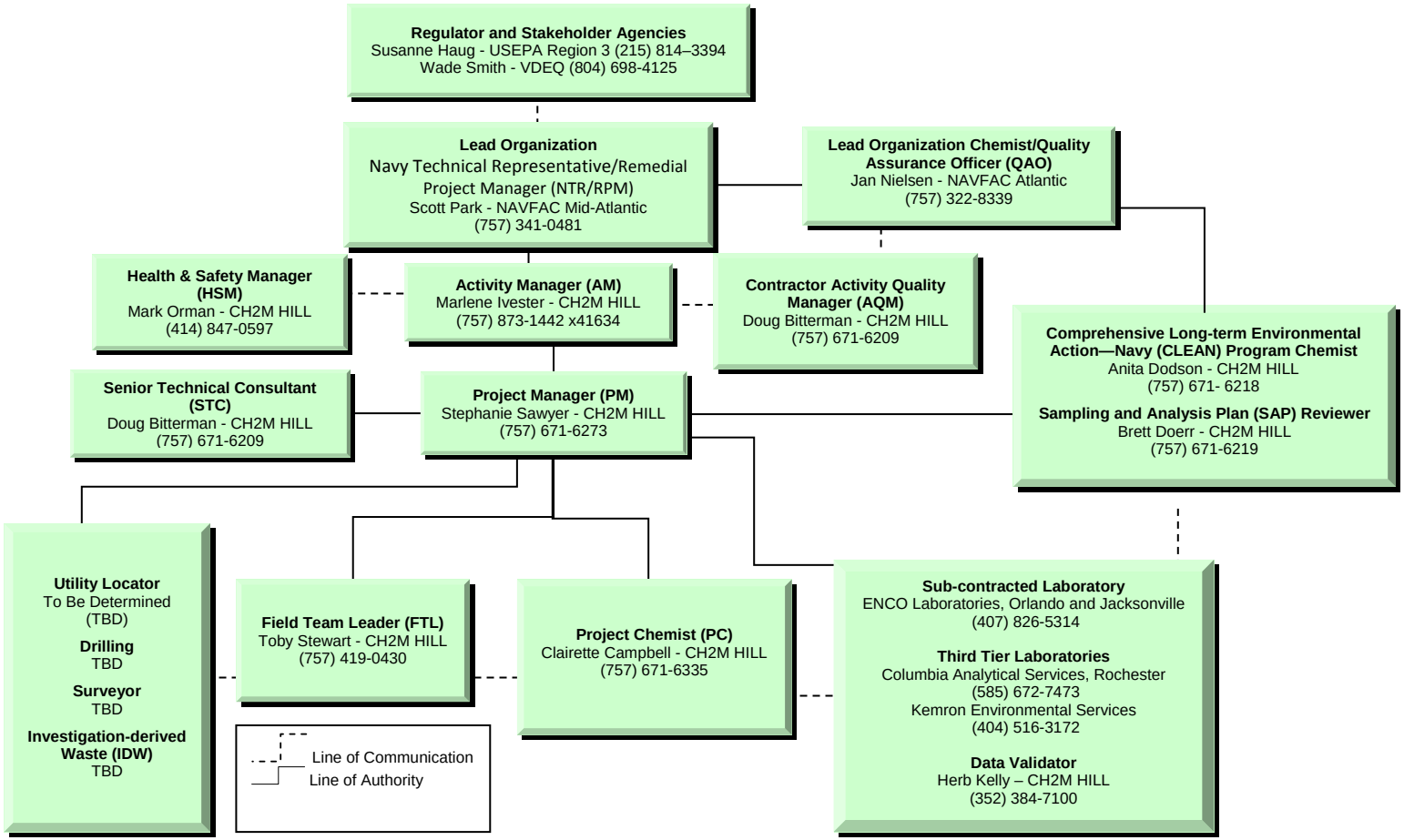

1.2 Communication Pathways

The communication pathways for the Sampling and Analysis Plan (SAP) are shown in **Table 1-1**.

TABLE 1-1
Communication Pathways

Communication Drivers	Responsible Affiliation	Name	Phone Number and/or E-mail	Procedure, Pathway, etc.
Communication with the Department of the Navy (Navy) (lead agency)	Naval Facilities Engineering Command (NAVFAC) Navy Technical Representative (NTR)/ Remedial Project Manager(RPM)	Scott Park	(757) 341-0481 scott.park@navy.mil	Primary point of contact (POC) for Navy; can delegate communication to other internal or external POCs. Any issues that may impact project work are to be reported to Scott immediately. NTR/RPM will notify the United States Environmental Protection Agency (USEPA) and the Virginia Department of Environmental Quality (VDEQ) via email or telephone within 24 hours of field changes affecting the scope or implementation of the work. Navy will have 30 days for SAP review.
Communication with USEPA Region 3	USEPA RPM	Susanne Haug	(215) 814-3394 Haug.Susanne@epamail.epa.gov	Primary POC for USEPA; can delegate communication to other internal or external POCs. Upon notification of field changes, USEPA will have 24 hours to approve or comment on the field changes. Responses will be communicated via email or phone.
Communication with VDEQ	VDEQ RPM	Wade Smith	(804) 698-4125 wade.smith@deq.virginia.gov	Primary POC for VDEQ; can delegate communication to other internal or external POCs. Upon notification of field changes, VDEQ will have 24 hours to approve or comment on the field changes. Responses will be communicated via email or phone.
Communication regarding overall project status and implementation and primary POC with Navy NTR/RPM, USEPA, and VDEQ	CH2M HILL Activity Manager (AM)	Marlene Ivester	(757) 873-1442 x41634 marlene.ivester@ch2m.com	Primary POC for stakeholder and agency managers; can delegate agency communication to other contract staff as appropriate. Oversees project and will be informed of project status by the Project Manager (PM). If field changes occur, the AM will work with the Navy NTR/RPM to communicate field changes to the USEPA and VDEQ via email within 24 hours.
Communications regarding project management and implementation	CH2M HILL Deputy AM; PM	Stephanie Sawyer	(757) 671-6273 stephanie.sawyer@ch2m.com	Primary modes of communication are phone, email, letter, document submittal; timing dependent on nature of communication and predefined schedule as applicable and as requested by stakeholder agencies. The PM will have 24 hours to respond to the request for field corrective actions (CAs). Responses will be communicated to the Field Team Leader (FTL) via phone. All information and materials about the project will be forwarded to the AM on a daily basis.

TABLE 1-1
Communication Pathways

Communication Drivers	Responsible Affiliation	Name	Phone Number and/or E-mail	Procedure, Pathway, etc.
Technical communications for project implementation, and data interpretation	CH2M HILL Senior Technical Consultant (STC) and Activity Quality Manager (AQM)	Doug Bitterman	(757) 671-6209 doug.bitterman@ch2m.com	Team members will contact the STC regarding questions and issues encountered in the field, input on data interpretation, and so forth, as needed. The STC will have 24 hours to respond to technical field questions as necessary. Responses will be communicated to the PM via email or phone. In addition, the STC/AQM will review data and deliverables as necessary prior to Partnering Team discussion or distribution.
SAP/Work Plan Changes prior to Field/ Laboratory work	PM	Stephanie Sawyer	(757) 671-6273 stephanie.sawyer@ch2m.com	Notify the Cheatham Annex (CAX) Partnering Team by phone or email of changes to the SAP made prior to beginning field work and the reasons within 24-hours.
Field Progress Reports	FTL	Toby Stewart	(757) 419-0430 toby.stewart@ch2m.com	Email or fax daily field progress reports to contractor PMs on a weekly basis; telephone communication with PMs on an as-needed basis.
Stop Work due to Safety Issues	Site Safety Coordinator	Toby Stewart	(757) 419-0430 toby.stewart@ch2m.com	Notify field personnel that work is to stop immediately if a safety issue is observed. Report all health and safety incidents and near misses to PM and Health and Safety Manager (HSM) via email or phone immediately if an incident occurred or within 24 hours if a near miss occurred.
SAP/Work Plan Changes in the Field	FTL	Toby Stewart	(757) 419-0430 toby.stewart@ch2m.com	Notify the PM by phone and email of changes to the SAP made in the field and the reasons within 24 hours. Documentation of deviations from the SAP will be kept in the field logbook; deviations made only with the approval of the PM. Approvals will be made via email or phone.
Field CAs	FTL	Toby Stewart	(757) 419-0430 toby.stewart@ch2m.com	The need for CA for field or analytical issues will be determined by the FTL and/or senior risk assessors and STC. Senior support will ensure SAP requirements are met by the field staff. The FTL will notify the PM via phone of any need for CA within 4 hours.

TABLE 1-1
Communication Pathways

Communication Drivers	Responsible Affiliation	Name	Phone Number and/or E-mail	Procedure, Pathway, etc.
Reporting Laboratory Data Quality Issues	Laboratory PM	Environmental Conservation Laboratories, Inc. (ENCO) – Ronnie Wambles ALS Environmental (ALS) Rochester – Debbie Patton Kemron Environmental Services, Inc. (Kemron) – Tommy Jordan	(407) 826-5314 (585) 672-7473 (404) 516-3172	All quality assurance (QA)/quality control (QC) issues with project field samples will be reported within 1 day to the Project Chemist (PC) by the laboratory. Should analytical laboratory issues affect data usability by rendering a significant amount of rejectable or unusable data, such that the project completeness goal cannot be obtained, the PC will notify the project team, including the Navy NTR/RPM and Navy Quality Assurance Officer (QAO).
Reporting Data Validation Issues	Data Validator (DV)	Herb Kelly	(352) 384-7100 herb.kelly@ch2m.com	All completeness and data issues will be addressed with the laboratory. The DV should copy the CH2M HILL PC on all communications to the laboratory. The validated data package will be due within 14 calendar days of data receipt by the DV.
Data Validation CAs	PC	Clairette Campbell	(757) 671-6335 clairette.campbell@ch2m.com	All issues discovered during data validation will be reported to the PC. CAs (revisions and additional information, if necessary) will be requested from the laboratory. The PC will review the data validation narrative and request CA from the DV if necessary.
Data tracking from field collection to database upload	PC	Clairette Campbell	(757) 671-6335 clairette.campbell@ch2m.com	The PC tracks the data and informs the PM and PC of potential problems or issues. The PM and AM are informed within 24 hours to pass on communications to Navy and regulators as appropriate.

2 Project Approach

The purpose of this Remedial Investigation (RI) is to collect additional soil and groundwater data to supplement the current Site Inspection (SI) dataset to adequately characterize Area of Concern (AOC) 8. All soil data evaluated in the earlier SI (CH2M HILL, 2012) and all soil and groundwater data collected as part of this RI will be used to characterize the site and support a Human Health Risk Assessment (HHRA) and an Ecological Risk Assessment (ERA) through Step 3a. Data collected from the 1999 field investigation will not be evaluated because subsequent test pitting activities during the 2008 SI overlapped the location of test pitting activities conducted in 1999; also, it could not be confirmed that the sediment sample collected during the 1999 field activities was in fact a sediment sample (CH2M HILL, 2012). In addition, VOC and inorganic constituent groundwater data, collected during the 2008 SI, will not be evaluated in the RI because these samples were collected using direct-push technology (DPT) and may not be representative of current VOC and inorganic concentrations in groundwater (due to the effects of increased sample turbidity and aquifer disturbance with DPT). The RI will include the installation and sampling of permanent monitoring wells to characterize groundwater.

2.1 Project Planning Sessions Participant Sheet

Two project scoping sessions were conducted with the CAX Partnering Team, as described in the following sections.

2.1.1 November 2011 Scoping Session

TABLE 2-1
November 2011 Scoping Session

Project Name: AOC 8 **Projected Date(s) of Sampling:** Winter 2012 **Project Manager:** Stephanie Sawyer **Date of Session:** 11/16/11 **Scoping Session Purpose:** AOC 8 RI UFP-SAP Scoping Session	**Site Name:** AOC 8 **Site Location:** CAX

Name	Title	Affiliation	Phone #	E-mail Address
John Burchette	RPM	USEPA Region 3	(215) 814-3378	burchette.john@epa.gov
Wade Smith	RPM	VDEQ	(804) 698-4125	wade.smith@deq.virginia.gov
Krista Parra	RPM	NAVFAC Mid-Atlantic	(757)-341-0395	krista.parra@navy.mil
Marlene Ivester	AM	CH2M HILL	(757) 671-1634	marlene.ivester@ch2m.com
Stephanie Sawyer	Deputy AM/PM	CH2M HILL	(757) 671-6273	stephanie.sawyer@ch2m.com

Comments and Decisions

Stephanie led the discussion and summarized the results of Step 2 in the SI, the SI report recommendations, and the objectives of the RI. Krista asked about the depth to groundwater at the site. How was it that groundwater was encountered at approximately 9.5 feet below ground surface (bgs) at one location and yet there were test trenches dug to 15 to 20 feet bgs approximately 15 feet away and no groundwater encountered? Was groundwater really at 9.5 feet or was it a perched zone? Stephanie was not sure and took an action item to investigate it further.

The following questions and proposed investigation activities were then discussed in order to frame the issues to be addressed by the SAP for the RI:

#1 - What is the lateral extent of buried material in the AOC 8 disposal area? It was proposed to excavate a minimum of 9 test pits to delineate the extent of buried debris. John asked how the berm originated. Stephanie, Wade, and Marlene replied that it is unknown, but looks as if it was the remnants of a borrow pit, and that it wasn't created so much as what was left behind. John asked how deep the test pits would be. Stephanie replied that they would be dug until native soil is reached or to the extent of the excavator – generally 20 feet bgs. However, we can look into getting a larger backhoe than the one used in the SI to dig deeper.

John asked if test trenches 15, 16, and 17, excavated during the SI, were clean. Stephanie replied that they were. John asked about test trench TP07 – what was encountered at 3 feet? Krista read from the test trench log from the SI that stated that fencing was encountered at 3 feet bgs and no other debris for the remaining depth of the trench, which ended at 20 feet bgs. John asked about test pitting to the east of TP13. *The Team agreed to add two test pit locations to the east of TP13 and that all other proposed test pit locations are fine (11 total test pit locations)*.

#2 - What is the nature and extent of contamination in soil? It was proposed to collect 10 co-located surface and subsurface soil samples and analyze for polycyclic aromatic hydrocarbons (PAHs), polychlorinated biphenyls (PCBs), and inorganics constituents to determine the nature and extent of soil contamination. Six of the sample locations will also be monitoring well locations. Wade asked about the proposed well location west of SI soil location SO08 – should it be further east? Stephanie replied the proposed location was chosen to confirm an SI groundwater tetrachloroethene (PCE) detection. Krista proposed moving the location east of SI soil location SO08. *The Team agreed. With the aforementioned change in one location, the Team agreed with the proposed 10 soil sampling locations and analyses.*

#3 - What is the nature and extent of contamination in groundwater and the groundwater flow direction and velocity? It was proposed to install six permanent monitoring wells and analyze samples for volatile organic compounds (VOCs) and total and dissolved inorganic constituents. It was proposed to NOT use the SI DPT groundwater results in the RI risk evaluations, as the permanent well data will be more representative of current groundwater conditions. As with this same proposal for the AOC 6 RI, John will check with his technical support and report back to the Team if USEPA agrees. *The Team agreed to the proposed 6 monitoring well and groundwater sampling locations and analyses (with the aforementioned change in one location discussed under question #2 above).*

#4 – Do site media pose a potentially unacceptable risk to human health? It was proposed to conduct a baseline HHRA with existing and proposed soil data and the proposed groundwater data. *The Team agreed, pending John checking with his technical support about not using the SI DPT groundwater data in the HHRA. His concern is eliminating the PCE result for DPT location DW02.*

#5 – Are there any additional data that can be collected to refine the HHRA? It was proposed to collect and analyze 5 surface soil samples for total and hexavalent chromium. *The Team agreed.* Chromium in earlier groundwater samples was not above background, so it was not proposed to analyze groundwater samples for total and hexavalent chromium. Navy and USEPA took an action item to discuss with their human health specialists the question of whether it can be inferred that hexavalent chromium is not present in groundwater if it was not detected in soil, OR if it should be analyzed in both media regardless of the soil results? The team members will report back to each other, but another scoping session is unnecessary. If it is determined to be necessary, total chromium and hexavalent chromium analyses for groundwater will be added to the SAP.

#6 – Do site media post a potentially unacceptable risk to ecological receptors? It was proposed that existing and proposed soil data be evaluated in an ERA (through Step 3a). Groundwater will be evaluated in the ERA in order to provide a conservative evaluation of the potential for significant contaminant transport via groundwater to the York River. *The Team agreed.*

Stephanie pointed out that although total organic carbon (TOC), pH, and grain size are not listed as additional analyses, these wet chemistry soil data parameters will be included in the SAP.

#7 – Is further action warranted at this site based on the results of this study? It was proposed that any recommendation for further action will be based on the nature and extent of buried debris, the findings of the HHRA and ERA, Maximum Contaminant Level (MCL) exceedances, and the expected future use of the site. *The Team agreed.*

Stephanie summarized the discussion and scoping proposals. *The Team agreed, including the changes captured herein. In addition, the Team agreed that surface water and sediment sample collection is unnecessary.*

Action Items and Results

1) Stephanie to look into the depth at which water was encountered during the SI field activities. *Based on the boring logs, there appears to be a perched water table where some of the groundwater samples were collected.*

2) Stephanie to look into the potential of getting a bigger backhoe than the one used in the SI in order to dig deeper test pits. *The maximum excavation depth of an excavator is generally around 20 feet bgs, and anything deeper would require benching.*

3) John to discuss with his hydrologist not including the DPT groundwater results collected as part of the SI. *On December 22, 2011, the USEPA agreed to not use the SI DPT groundwater results in the RI.*

4) Navy and USEPA to discuss with their human health specialists the question of whether it can be inferred that hexavalent chromium is not present in groundwater if it was not detected in soil, OR if it should be analyzed in both media regardless of the soil results? (The result of the hexavalent chromium discussion will also be applied to the AOC 6 RI as appropriate.) *Based on the outcome of discussions with their human health specialists, the USEPA and Navy conducted a separate scoping session in January 2012 to discuss hexavalent chromium speciation. The results of this scoping session are included in* ***Section 2.1.2****, as follows.*

2.1.2 January 2012 Scoping Session

TABLE 2-2
January 2012 Scoping Session

Project Name: AOC 8 **Site Name:** AOC 8
Projected Date(s) of Sampling: Winter 2012 **Site Location:** CAX
Project Manager: Stephanie Sawyer
Date of Session: 1/18/12
Scoping Session Purpose: AOC 8 RI UFP-SAP Scoping Session

Name	Title	Affiliation	Phone #	E-mail Address
John Burchette	RPM	USEPA Region 3	(215) 814-3378	burchette.john@epa.gov
Wade Smith	RPM	VDEQ	(804) 698-4125	wade.smith@deq.virginia.gov
Krista Parra	RPM	NAVFAC Mid-Atlantic	(757) 341-0395	krista.parra@navy.mil
Marlene Ivester	AM	CH2M HILL	(757) 671-1634	marlene.ivester@ch2m.com
Stephanie Sawyer	Deputy AM/PM	CH2M HILL	(757) 671-6273	stephanie.sawyer@ch2m.com

Comments and Decisions

Krista informed the Team that her human health tech support said collecting two, instead of five, samples for hexavalent chromium speciation in soil is sufficient. John indicated he would prefer three samples for statistical analysis. Krista mentioned the hexavalent chromium results from each site could be used to estimate a single, basewide ratio of hexavalent to total chromium for use in future investigations. John and Wade were fine with this approach. Stephanie added that the two samples collected for hexavalent chromium analysis at each site will be collected from the areas of the highest chromium concentrations in the SI samples. Krista proposed no sampling for hexavalent chromium in groundwater, unless there is a known source. John agreed and added that his human health tech support said most of the time hexavalent chromium, not trivalent, is what you see in groundwater. John suggested doing one surface and one subsurface soil sample at each site for the hexavalent chromium analysis so we can get a number for both intervals. However, this was not agreed to by the team.

Based on this discussion, the Team agreed that two, instead of five, surface soil samples from AOC 8 will be collected for hexavalent chromium analysis, taken near SI locations SO04 and SO06. Also, since the sample by SO06 is a new sampling location and will not be analyzed for site-related contaminants (PAHs, PCBs, and inorganic constituents) it will also be analyzed for total chromium for comparison purposes.

2.1.3 March 2013 Scoping Session

TABLE 2-3
March 2013 Scoping Session

Project Name: AOC 8 **Site Name:** AOC 8
Projected Date(s) of Sampling: Summer 2013 **Site Location:** CAX
Project Manager: Stephanie Sawyer
Date of Session: 3/28/13
Scoping Session Purpose: To discuss and agree to sampling plan changes based on EPA comments on the Draft UFP-SAP

Name	Title	Affiliation	Phone #	E-mail Address
Susanne Haug	RPM	USEPA Region 3	(215) 814-3394	Haug.Susanne@epamail.epa.gov
Wade Smith	RPM	VDEQ	(804) 698-4125	wade.smith@deq.virginia.gov
Scott Park	RPM	NAVFAC Mid-Atlantic	(757) 341-0481	Scott.park@navy.mil
Marlene Ivester	AM	CH2M HILL	(757) 671-1634	marlene.ivester@ch2m.com
Stephanie Sawyer	Deputy AM/PM	CH2M HILL	(757) 671-6273	stephanie.sawyer@ch2m.com
Bill Kappleman	Ecological Risk Assessor	CH2M HILL	(703) 376-5152	William.kappleman@ch2m.com
John McCloskey	Ecological Risk Assessor	FWS (USEPA BTAG)	(804) 693-6694 X116	John_McCloskey@fws.gov
Peter Knight	Ecological Risk Assessor	NOAA (USEPA BTAG)	(215) 814-3321	Peter.Knight@noaa.gov

Comments and Decisions

On March 28, 2013, the CAX Partnering team (and their associated technical support) held a conference call to discuss the remaining EPA comments on the draft version of this UFP-SAP. In Round 2, Comment #1, the USEPA expressed their concern that a limited number of soil samples were being evaluated from within the area of observed surficial debris. In order to address this concern, the CAX Partnering Team discussed sampling options and agreed that three 5-point composite surface soil (0-6 inches bgs) and three 5-point composite subsurface soil (6-24 inches bgs) would be collected from this area. The team agreed that the surface and subsurface sample components making up the 5-point composites will be co-located, and will be collected from three roughly equal size areas comprising the surface debris area. In substitution for the additional three 5-point composite samples

within the surface debris area, the CAX Partnering Team agreed that the originally proposed discrete surface and subsurface soil samples, to be collected at the groundwater sampling location within this area, would not be collected. The CAX Partnering Team then agreed to analyze the 5-point composite samples for PAHs, pesticides, PCBs, and metals, since these were the constituents that were detected above the project action limits during the recent SI.

In Round 2, Comment #3, the USEPA expressed their concern that there were no samples being evaluated from the immediate vicinity where debris is visible within the side of the berm. Since no samples have been collected in the immediate vicinity of this debris, the CAX Partnering Team agreed that one 5-point composite surface (0-6" bgs) and one 5-point composite subsurface (6-24" bgs) soil sample will be collected. The CAX Partnering Team then agreed that these soil samples would be analyzed for PAHs, pesticides, PCBs, and metals.

In addition, during the March 28, 2013 conference call, the USEPA's technical support expressed some concerns about the absence of soil samples within the low-lying area located east of where buried debris was encountered. To address this concern, the CAX Partnering Team, with the concurrence of technical support, agreed that the co-located surface and subsurface soil samples, originally to be co-located with the southeastern-most monitoring well, would be moved to within the low-lying area. The CAX Partnering Team agreed that the co-located surface and subsurface soil samples at this location will be analyzed for PAHs, pesticides, PCBs, and metals.

2.2 Conceptual Site Model

The conceptual site model (CSM) for AOC 8 is based on data collected as part of the 2008 SI. This CSM combines and interprets information on the site background and history, physical setting, distribution of contamination, release history, potential migration pathways, and the potential exposure and receptor pathways. The CSM for AOC 8 is provided as **Figure 3**.

2.2.1 Site Background and History

CAX encompasses 2,300 acres east of Williamsburg, between Interstate 64 and the York River on the York-James Peninsula (**Figure 1**). CAX is located on the site of the former DuPont Company Penniman Shell Loading Plant (PSLP) facility and is currently used to supply Atlantic Fleet ships and provide recreational opportunities to military and civilian personnel. The former PSLP facility was used as a powder and shell loading plant during World War I (WWI) and was closed in 1918. AOC 8, identified as the Area South of Site 7, is approximately 1.5 acres in size and located within a bermed area along the York River, northeast of the intersection of Chase and Lynch Roads (**Figure 2**). While the history of AOC 8 is unknown, it is assumed that this area was once a borrow pit (and the berm is the remnants of what was left following the soil removal) and once it was no longer in use, it was filled in with debris. The site consists of surface and buried debris, with gravel and ballast rock (potentially disposed of during the removal of nearby, offsite railroad beds) on the ground surface. In a small area of the site, buried debris (pipe, metal, and wood) is visible within the side of the berm.

AOC 8 was previously thought to be the location of Environmental Restoration Site 7, the Old DuPont Disposal Area, and was investigated as such in 1999 during a field investigation (Baker, 2001). This investigation included the excavation of 10 test pits to define the lateral extent of buried debris at the site. In addition, one sample (identified as a sediment sample) was collected from the low lying area east of where buried debris was encountered. The sample was collected because this area receives runoff from the site and is adjacent to a slope where debris is visible within the side of the berm; the sample was analyzed for VOCs, semivolatile organic compounds (SVOCs), pesticides, PCBs, nitroamines and nitroaromatics, and inorganic constituents. Analytical results from this sample indicated the presence of Aroclor-1260 (540L micrograms per kilogram [µg/kg]) and arsenic (5.9 milligrams per kilogram [mg/kg]) at concentrations exceeding the USEPA Risk Based Concentrations for residential soil (Baker, 2001).

The debris found within the test pits (for example, Styrofoam, a candy wrapper with a Universal Product Code [UPC] bar code, and one spent 75-millimeter [mm] salute round) indicated disposal was more recent than the WWI-era, suggesting this disposal area is not related to the PSLP, which ceased operations shortly after WWI (Baker, 2001). Site 7 was eventually located when test trenching was conducted approximately 500 feet north of this site; thus, this area was re-designated as AOC 8. During the test pitting investigation, the vertical extent of debris was generally 6.5 feet bgs or less; however, at two of the test pits, native soil was not reached, as excavation was terminated due to "heavy debris" (Baker, 2001). Since the horizontal extent of the debris was not determined, an additional investigation was recommended.

In 2008, test pits were excavated and soil and groundwater samples were collected as part of an SI (**Figure 4**). Historical data from the 1999 field investigation was not evaluated in the SI because test pitting activities during the 2008 SI overlapped the locations of test pitting activities conducted in 1999 (CH2M HILL, 2012). In addition, the sediment sample collected from a topographic low spot during the 1999 field activities was not used in evaluating the extent of contamination or risk associated with AOC 8 because it could not be confirmed that it was indeed a sediment sample.

Results from the 2008 SI indicated that buried debris exists at AOC 8; however, the vertical and horizontal extent had not been delineated. In addition, the results from the soil and groundwater sampling indicate potential unacceptable risks to human health associated with exposure to benzo(b)fluoranthene and Aroclor-1260 in soil and PCE in groundwater; additional activities were recommended.

2.2.2 Physical Setting

In general, the topography of AOC 8 is a flat, sparsely-vegetated depression within a bermed area next to the York River (**Figure 3**). The berms along the northern and southern edges of AOC 8 are approximately 5 feet high. The berm along the York River is approximately 10 feet high. Surface runoff from the area surrounding AOC 8 is anticipated to flow towards the York River; however, within AOC 8, the bermed area prevents surface water from reaching the York River. Based on the SI, in general, soil at AOC 8 is predominantly olive-yellow silty sand and brown sandy clay. The first encountered groundwater underlying AOC 8 is the Yorktown-Eastover aquifer and is encountered between 5 and 15 feet bgs. Based on the topography, groundwater is expected to flow east-northeast toward the York River, which is the nearest open-water body to AOC 8.

AOC 8 is within the confines of CAX and access is restricted to the general public. Navy and Department of Defense (DoD) personnel do have access to AOC 8. It is currently a sparsely-vegetated area, with no specified designated use. Future land use at AOC 8 is not expected to change and will likely continue for the foreseeable future.

2.2.3 Distribution of Contamination

Two areas of buried debris were encountered at AOC 8 (**Figure 5**). One area is located immediately south of the site entrance road and consisted of metal wire and cable to a depth of approximately 2 feet bgs. The second buried debris area is located at the end of the site entrance road (**Figure 5**). Shallow buried debris in this area was encountered to an approximate depth of 6 feet bgs and consisted primarily of wood, concrete, glass, plexiglass, various metal debris (wire, piping, fencing, bars, rods, and chains), and construction debris (bricks, burned and unburned wood, nails, burlap, plexiglass shards). In addition, a chalky blue powder was also observed in two test pits to a depth of approximately 6 feet bgs. Clean fill soil was subsequently observed below the shallow buried debris; however, deeper buried debris, including scrap metal and steel cylinders were encountered at approximately 15 feet bgs. This deeper debris extended past the vertical reach of the backhoe (20 feet bgs) in some locations; however, it is unlikely that buried debris exists below the groundwater table (estimated to be less than 30 feet bgs based on site-specific DPT borings and test trenches and the depth to water at nearby Site 7, located near and to the north of AOC 8).

Based on the findings of the SI report, benzo(b)fluoranthene, Aroclor-1260, endrin aldehyde, arsenic, chromium, selenium, and zinc exceeded their respective human health and/or ecological screening criteria and are the primary constituents of potential concern (COPCs) in soil (**Appendix B**); however, additional soil data are required to supplement the existing dataset to adequately characterize the site. The highest benzo(b)fluoranthene, Aroclor-1260, endrin aldehyde, arsenic, chromium, selenium, and zinc concentrations were detected in surface soil sample CAA08-SS04, which was collected in the same location as test pit CAA04-TP14, where metal debris was encountered between the ground surface and 20 feet bgs.

Based on the findings of the SI report, PCE and inorganic constituents are the primary COPCs in groundwater (**Appendix B**). No other organic compounds (SVOCs, pesticides, PCBs, or explosives) were detected in groundwater (CH2M HILL, 2012); therefore no further action is required for these constituents. Additional groundwater data are required to confirm the PCE detection from the SI and adequately characterize the inorganic concentrations in groundwater. Although groundwater samples were analyzed for VOCs and inorganic constituents during the SI, these results will not be used in the RI because the groundwater samples were not collected from permanent monitoring wells and may not be representative of current VOC and inorganic concentrations in groundwater (due to the effects of increased sample turbidity and aquifer disturbance with DPT).

2.2.4 Release History

Buried materials within the two burial areas are the primary known and suspected sources of contamination at AOC 8 (**Figure 5**).

2.2.5 Potential Migration Pathways

The principal contaminant release and transport mechanisms from source areas include leaks and deterioration of buried materials and leaching of VOCs and inorganic constituents from soil to groundwater as a result of rainwater infiltration. Based on the results of the groundwater sampling conducted as part of the SI, other site-related soil contaminants (PAHs and PCBs) have not leached into the groundwater despite the likely multi-decade time frame since disposal activities ceased and the relatively short distance beneath the waste material and the water table (CH2M HILL, 2012). Where contaminants are exposed at the ground surface, transport could also occur through surface runoff; however, since the site is located in a low-lying area with no pathways for surface runoff to flow offsite, the surface runoff is expected to eventually infiltrate into the ground or evaporate within the site boundary. No perennial surface water bodies are present within the site boundary. Standing water is only present in low-lying areas of the site during and immediately following precipitation events.

2.2.6 Potential Exposure and Receptor Pathways

Potential human receptors exposed to soil and groundwater at AOC 8 include:

- Current site visitors, maintenance workers, and trespassers (surface soil)
- Future trespassers (surface and subsurface soil)
- Future maintenance workers (surface and subsurface soil)
- Future industrial workers (surface and subsurface soil and groundwater)
- Future residents (surface and subsurface soil and groundwater)
- Future construction workers (surface and subsurface soil and groundwater)

These potential receptors may be exposed to site-related contaminants through ingestion of, inhalation of particulates from, and dermal contact with soil; ingestion of, dermal contact with, and inhalation of VOCs from groundwater; and inhalation of indoor air (vapor intrusion).

Potential ecological receptors exposed to surface soil at AOC 8 include lower trophic level terrestrial receptors (plants and soil invertebrates). Due to the small size of areas on the site that contain debris (the source areas, comprised of about 0.7 acres of the 1.5 acre site), exposures to upper trophic level receptors (such as birds and mammals) are not considered significant. However, for conservatism, potential exposures to these upper trophic level receptors from incidental ingestion and food webs will be evaluated (appropriate area use factors [AUFs] may be applied in the BERA portion of the ERA). The lower trophic level receptors may be exposed to site-related contaminants through root uptake from the soil and through direct exposure with soil. There is also the potential for groundwater transport of site-related constituents to the York River, at which point there may be potential exposures to aquatic receptors (benthic dwelling and aquatic organisms).

2.3 Data Quality Objectives and Systematic Planning Process Statements

2.3.1 Project Statement and Objectives

The objective of the RI is to collect additional data to supplement the current SI dataset to fill spatial data gaps and identify migration pathways in order to adequately characterize AOC 8 and evaluate potential risks to human health and ecological receptors. Field activities will include delineating the lateral extent of the two burial areas, collecting additional soil samples, and collecting groundwater samples from permanent monitoring wells to adequately characterize the site. All test pit and soil data evaluated in the SI (CH2M HILL, 2012) and all data collected as part of this RI will be used to support an HHRA and ERA. While AOC 8 is located adjacent to the York River, no surface water or sediment sampling is recommended at this time because the location and the height of the berm along the eastern boundary (**Figure 3**) prevents the transport of site-related contaminants into the York River from surface runoff. In addition, the only potential risk identified in the groundwater sample collected closest to the York River, during the SI, was due to arsenic concentrations; however, these results may not be representative of current arsenic concentrations because the groundwater samples were not collected from permanent monitoring wells. If, following the evaluation of the RI data, it is determined additional RI data (i.e., surface water and sediment samples from the York River or groundwater discharge data) are needed to adequately fulfill the objectives of the RI, an addendum to this UFP-SAP will be prepared and submitted for Partnering Team review, prior to completion of the RI Report.

2.3.2 Data Quality Objectives

Quantifiable analytical results will be the primary basis for project decisions. The limit of quantitation (LOQ), which is defined as the minimum concentration or quantity of a target analyte that can be reported with accurate quantitation, will be the metric to define whether an analytical result is quantifiable.

If the analysis of samples determines that analytes are undetected or if any detected analytes are below the Project Action Limits (PALs), then it will be assumed that the nature and concentrations of these constituents do not pose an unacceptable risk, and no further action for them will be necessary.

If the analysis of samples determines that analytes are detected above the project-specific PALs then a quantitative human health and ERA will be conducted to identify COPCs as follows:

Human Health Decision Logic (Figure 6)

Results of the RI soil sampling will be combined with the soil sample data evaluated in the SI to determine whether there may be unacceptable risks to potential human receptors:

- Soil concentrations will be compared to the adjusted residential soil Regional Screening Levels (RSLs) (adjusted meaning that RSLs based on non-carcinogenic effects are divided by 10 to account for exposure to more than one constituent that effects the same target organ; RSLs based on carcinogenic endpoints are not adjusted). If the maximum detected concentration of a constituent exceeds the applicable RSL, the constituent will be identified as a COPC.

- If COPCs are identified, human health risks will be evaluated for exposure to the COPCs indentified in soil for all potential human receptors (such as current visitors, maintenance workers, trespassers, future trespassers, maintenance and industrial workers, residents, and construction workers). The 95 percent upper confidence limit (UCL) of the mean soil concentration will be used as the exposure concentration for the risk calculations. If all risks are within acceptable USEPA risk levels, no further action or assessment based on human health will be required for soil.
- If potentially unacceptable risks are identified associated with inorganic constituents, the inorganic constituent data will be compared to the base background 95 percent upper tolerance limits (UTLs) (CH2M HILL, 2011b) to determine if the risks are associated with the site or background conditions. If all risks are associated with background conditions, no further action or assessment based on human health will be required for inorganic constituents in soil. If risks are not associated with base background conditions, the constituent will be identified as a constituent of concern (COC).
- If the COC concentrations exceed the background 95 percent UTL, further evaluation will be conducted to consider whether the COC concentrations are consistent with background conditions or if they represent a release such that further action is warranted.

Results of the RI groundwater sampling will be evaluated to determine whether there may be unacceptable risks to potential human receptors:

- Groundwater concentrations from monitoring wells will be compared to the adjusted tap water RSLs (adjusted meaning that RSLs based on non-carcinogenic effects are divided by 10 to account for exposure to more than one constituent that effects the same target organ; RSLs based on carcinogenic endpoints are not adjusted). If the maximum detected concentration of a constituent exceeds the applicable RSL, the constituent will be identified as a COPC.
- If COPCs are identified, human health risks will be evaluated for exposure to the COPCs indentified in groundwater for future industrial workers, residents, and construction workers. The 95 percent UCL of the mean groundwater concentration from the wells located in the most contaminated portion of the groundwater plume (if a plume is identified) will be used as the exposure concentration for the risk calculations. If all risks are within acceptable USEPA risk levels, no further action or assessment based on human health will be required for groundwater.
- If potentially unacceptable risks are identified associated with inorganic constituents, the inorganic constituent data will be compared to the base background 95 percent UTLs to determine if the risks are associated with the site or background conditions. If all risks are associated with background conditions, no further action or assessment based on human health will be required for inorganic constituents in groundwater. If risks are not associated with base background conditions, the constituent will be identified as a COC.
- If the COC concentrations exceed the background 95 percent UTL, further evaluation will be conducted to consider whether the COC concentrations are consistent with background conditions or if they represent a release such that further action is warranted.

Ecological Decision Logic (Figure 6)

Results of the soil analytical sampling will be evaluated as follows to determine whether potential risks to terrestrial receptors may be occurring:

- Soil concentrations from each site sample (with a sample depth less than 24 inches bgs) will be compared to literature-based soil screening values for plants and/or soil invertebrates. Initial COPCs will include all chemicals for which the maximum hazard quotient (HQ) equals or exceeds 1 based upon a detected concentration and all detected constituents lacking screening values. Mean and 95% UCL soil concentrations will also be compared with soil screening values (samples may be partitioned by spatial area when calculating means and 95% UCLs). These two central tendency exposure point concentration comparisons will be a primary consideration in determining if a chemical should be identified as a refined COPC, as will comparisons to background concentrations (see below). However, other factors, such as the magnitude of the maximum HQ and the spatial pattern of screening value exceedances, will also be considered when making this determination.
- If the quantitative ERA (through Step 3a) identifies soil COPCs, the COPCs will be compared to the base surface soil background 95 percent UTLs to determine if the detected concentrations are consistent with the base background concentrations. If the COPCs do not exceed the background 95 percent UTL, then no further action for the COPCs will be necessary.
- If the COPC concentrations exceed the background 95 percent UTL, further evaluation will be conducted to consider whether the COPC concentrations are consistent with background conditions or if they represent a release such that further action is warranted..
- Food web exposures (for detected bioaccumulative constituents in surface soil) for upper trophic level receptors will also be modeled for terrestrial habitats at AOC 8. Terrestrial receptors may include: (1) meadow vole; (2) short-tailed shrew; (3) white-footed mouse; (4) red fox; (5) American robin; and (6) red-tailed hawk. If maximum exposure doses (calculated using maximum surface soil concentrations) exceed NOAEL-based ingestion toxicity reference values (TRVs), the chemical will be identified as an initial COPC. Mean and 95% UCL-based exposure doses (for bioaccumulative chemicals) will also be calculated and compared with NOAEL, LOAEL, and Maximum Acceptable Toxicant Concentration (MATC)-based TRVs. If the MATC-based HQ equals or exceeds one based upon the mean soil concentration, the chemical will be identified as a refined COPC. Appropriate area use factors [AUFs] may be applied when selecting refined COPCs.

Results of the groundwater analytical sampling will be evaluated as follows to provide a conservative evaluation of the potential for significant contaminant transport via groundwater to the York River:

- Groundwater concentrations from each site sample will be compared to literature-based marine surface water screening values and Biological Technical Assistance Group (BTAG) Region 3 marine screening values. Initial COPCs will include all chemicals for which the maximum HQ exceeds 1 based upon a detected concentration and all detected constituents lacking screening values. For inorganic constituents, COPC selection will be based upon the results from filtered samples. Mean and 95% UCL groundwater concentrations will also be compared with surface water screening values (samples may be partitioned by spatial area when calculating means). These two central tendency exposure point concentration comparisons will be a primary consideration in determining if a chemical should be identified as a refined COPC, as will comparisons to background concentrations (see below). However, other factors, such as the magnitude of the maximum HQ and the spatial pattern of screening value exceedances, will also be considered when making this determination. Dilution factors may also be considered during the refined assessment.
- If the ERA identifies groundwater COPCs, the COPCs will be compared to the base groundwater background 95 percent UTLs to determine if the detected concentrations are consistent with the base background concentrations. If the COPCs do not exceed the background 95 percent UTL, then no further action for the COPCs will be necessary.

- If the COPC concentrations exceed the background 95 percent UTL, further evaluation will be conducted to consider whether the COPC concentrations are consistent with background conditions or if they represent a release such that further action is warranted..

2.3.3 What are the environmental questions to be answered?

The following environmental questions will be answered in the RI.

What is the lateral extent of buried material in the AOC 8 disposal areas?

The nature of buried material is known based on 27 test pits completed during the SI. Buried material includes wood, concrete, glass, plexiglass, various metal debris (wire, piping, fencing, bars, rods, and chains), and construction debris (bricks, burned and unburned wood, nails, burlap, and plexiglass shards). However, the lateral and vertical extents of these materials have not yet been confirmed. While it is assumed no buried debris outside the bermed area exists, additional test pitting is required to confirm the lateral extent of buried materials. The vertical extent of buried materials cannot be confirmed due to the depth of debris encountered during the SI (greater than 20 feet and beyond the reach of the excavation equipment.

The following work is proposed to answer this environmental question:

A minimum of 11 test pits will be excavated to delineate the lateral extent of buried debris at AOC 8 (**Figure 5**). If buried debris is encountered in some of the test pits, additional test pits may be excavated as necessary in order to determine the lateral extent of buried debris. Since the maximum excavation depth of an excavator is generally around 20 feet bgs, the vertical test pit depths will not exceed 20 feet. Debris is not expected to extend beyond the groundwater table [less than 30 feet bgs].

What is the nature and extent of contamination in surface soil?

There are nine existing surface soil samples (0 to 6 inches) that were previously collected and evaluated in the 2008 SI (CH2M HILL, 2012). These data will be used to determine the nature and extent of contamination at the site. However, additional surface soil data are necessary to adequately characterize this medium.

The following work is proposed to answer this environmental question:

Eight discreet surface soil samples (0 to 6 inches) will be collected from AOC 8 (**Figure 7**) and analyzed for PAHs, PCBs, and inorganic constituents to supplement the existing surface soil data. These surface soil samples will be analyzed for TOC, pH, and grain size to collect physical parameter data needed to complete the ERA. In addition, one of these surface soil samples (in the vicinity of SI location SO04) and one additional surface soil sample (in the vicinity of SI location SO06) (**Figure 7**) will be analyzed for hexavalent chromium to refine the baseline HHRA, as discussed further in the following *Is there any additional data that can be collected to refine the HHRA?* section.

In order to address the USEPA comments on the draft version of this UFP-SAP, one discreet surface soil sample (0 to 6 inches) will be collected from the low-lying area east of where buried debris was encountered and four 5-point composite surface soil samples will be collected from the area of observed surficial debris (**Figure 7**) and from the immediate area of the visible debris within the side of the berm (**Figure 7**) and analyzed for PAHs, pesticides, PCBs, and inorganic constituents. These surface soil samples will be analyzed for TOC and pH to collect physical parameter data needed to complete ERA.

What is the nature and extent of contamination in subsurface soil?

There are nine existing subsurface soil samples (6 to 24 inches) and three existing deeper subsurface soil samples (20 feet) that were previously collected and evaluated in the 2008 SI (CH2M HILL, 2012).These data will be used to determine the nature and extent of contamination at the site. However, additional subsurface soil (6 to 24 inches) data are necessary to adequately characterize this medium.

The following work is proposed to answer this environmental question:

Nine discreet subsurface soil samples (6 to 24 inches) will be collected from AOC 8 (**Figure 7**) and analyzed for PAHs, PCBs, and inorganic constituents to supplement the existing subsurface soil data. These subsurface soil samples will also be analyzed for pH to collect physical parameter data needed to complete the ERA.

In addition, in order to address the USEPA comments on the draft version of this UFP-SAP, one discreet subsurface soil sample from the low-lying area east of where buried debris was encountered and four 5-point composite subsurface soil samples will be collected from the area of observed surficial debris and from the immediate area of the visible debris within the side of the berm (**Figure 7**) and analyzed for PAHs, pesticides, PCBs, and inorganic constituents. These subsurface soil samples will be analyzed for TOC and pH to collect physical parameter data needed to complete the ERA.

What is the nature and extent of contamination in groundwater and the groundwater flow direction and velocity?

There are four existing groundwater samples that were previously collected and evaluated in the 2008 SI (CH2M HILL, 2012). The analytical results collected as part of the 2008 SI indicate that there are no SVOCs, pesticides, or PCBs detected in groundwater; therefore, no additional sampling or risk analysis is required for these contaminant groups. Although groundwater samples were analyzed for VOCs and inorganic constituents in the 2008 SI, these results will not be used in the RI because the groundwater samples were not collected from permanent monitoring wells and may not be representative of current VOC and inorganic concentrations in groundwater (due to the effects of increase sample turbidity and aquifer disturbance with DPT). Therefore, groundwater VOC and inorganic constituent data from permanent monitoring wells are necessary to adequately characterize this medium.

The following work is proposed to answer this environmental question:

Six permanent groundwater monitoring wells will be installed and six groundwater samples will be collected from AOC 8 (**Figure 7**) and analyzed for VOCs and total and dissolved inorganic constituents. The six groundwater samples will also be analyzed for natural attenuation parameters (wet chemistry parameters – nitrate, nitrite, sulfate, sulfide, alkalinity, methane, ethane, and ethane) to assist in determining the degradation and mobility of VOCs and inorganic constituents. In addition, the monitoring well water levels will be gauged and slug tests will be conducted in order to determine the groundwater flow and velocity. Since the VOC and inorganic constituent groundwater data collected during the 2008 SI were not collected from permanent monitoring wells, but rather from DPT sampling points, the new VOC and inorganic constituent groundwater data will be evaluated in the RI in place of the SI groundwater dataset.

Do site media pose a potentially unacceptable risk to human health?

Soil and groundwater data that were previously collected and evaluated in the SI (CH2M HILL, 2012) were compared to base background 95 percent UTLs, media specific RSLs, and MCLs (in the case of groundwater) to determine whether the detected constituents could potentially pose an unacceptable risk to human health. Based on the results of this comparison, benzo(b)fluoranthene, Aroclor-1260, arsenic, and chromium concentrations exceeded their respective screening criteria in select surface soil samples (CH2M HILL, 2012). In select subsurface soil samples, Aroclor-1260 and arsenic concentrations exceeded their respective screening criteria (CH2M HILL, 2012). In select groundwater samples, PCE, total arsenic, iron, and manganese, and dissolved arsenic, cobalt, iron, and manganese exceeded their respective screening criteria (CH2M HILL, 2012). Based on the spatial coverage of the existing and proposed data set, no additional sampling (in addition to the SI data and the sampling proposed in this Uniform Federal Policy [UFP]-SAP) is necessary to adequately assess the potential risk to human health.

The following work is proposed to answer this environmental question:

A baseline HHRA will be completed to determine if site contaminants potentially pose an unacceptable risk to human health. All existing soil data and soil and groundwater data collected as part of this RI will be evaluated in the baseline HHRA.

Are there any additional data that can be collected to refine the HHRA?

Results of the risk screening conducted during the SI (CH2M HILL, 2012) indicated that exposure to chromium in surface soil may pose potential unacceptable risk to human health. However, in performing the risk evaluation, it was assumed that all of the chromium detected in the soil is in the hexavalent form, which is unlikely since chromium is generally found in natural soil in the trivalent form unless activities at the site have resulted in the release or formation of hexavalent chromium. Therefore, surface soil chromium speciation data are needed to adequately assess the potential risk to human health due to exposure to surface soil.

The following work is proposed to answer this environmental question:

Two surface soil samples (to be collected near SI locations SO04 and SO06 – the locations with the highest and third highest chromium detections) will be collected from AOC 8 (**Figure 7**) and analyzed for hexavalent chromium to refine the baseline HHRA. Also, since the sample in the vicinity of SI sample location SO06 is not being analyzed for other site-related contaminants (PAHs, PCBs, and inorganic constituents), it will also be analyzed for total chromium for comparison purposes (the surface soil sample being collected in the vicinity of SI sample SO04, will be analyzed for PAHs, PCBs, and metals; therefore total chromium analysis will not be needed as it is included in the metals analytical suite). Subsurface soil and groundwater samples will not be analyzed for hexavalent chromium since the detected chromium concentrations in samples collected during the SI (CH2M HILL, 2012) did not exceed the basewide background concentrations (for soil) or was not detected (for groundwater).

Do site media pose a potentially unacceptable risk to ecological receptors?

Soil data that were previously collected and evaluated in the SI (CH2M HILL, 2012) were compared to base background 95 percent UTLs, site-specific ecological screening values (ESVs) which are based upon lower trophic level exposures in accordance with the CSM, and surrogate values (when an ESV was not available) to determine whether the detected constituents could potentially pose a risk to ecological receptors. Based on the results of this comparison, endrin aldehyde, selenium, and zinc concentrations exceeded their respective screening values in at least one surface soil sample (CH2M HILL, 2012). In subsurface soil samples, endrin aldehyde concentrations exceeded their respective screening values in at least one sample (CH2M HILL, 2012).

In addition, groundwater data that were previously collected and evaluated in the SI (CH2M HILL, 2012) were compared to base background 95 percent UTLs and marine surface water ESVs to provide a conservative evaluation of the potential for significant contaminant transport via groundwater to the York River. No chemical concentrations exceeded their respective screening values based upon mean concentrations and a dilution factor of 10, although three inorganic constituents (aluminum, iron, and manganese) exceeded screening values based upon maximum undiluted concentrations (CH2M HILL, 2012). Based on the spatial coverage of the existing and proposed data set, no additional sampling (in addition to the SI data and the sampling proposed in this UFP-SAP) is necessary to adequately assess the potential risk to ecological receptors.

The following work is proposed to answer this environmental question:

An ERA (through Step 3a) will be completed to determine whether site contaminants in soil could potentially pose an unacceptable risk to ecological receptors. All existing site soil data and data collected as part of this RI will be evaluated in the ERA; however, the ERA will only consider soil data collected within 2 feet of the ground surface. Although ecological receptors do not typically have direct exposure to groundwater, proposed groundwater data will be used in the ERA in order to provide a conservative evaluation of the potential for significant contaminant transport via groundwater to the York River.

Is further action (that is, further investigation, removal, or remediation) warranted at this site based on the results of this study?

Further action may be recommended, based on the nature and extent of buried debris, findings of the HHRAs and ERAs, exceedances of groundwater MCLs, and the expected future use of the site.

2.3.4 Project Action Limits

The detected soil and groundwater data will be compared to the following PALs to identify COPCs (PAL values are included in Appendix A, **Tables A-1a** through **A-1i**):

1. Surface Soil: USEPA Adjusted Residential Soil RSLs for human health and literature-based ESVs for plants and soil invertebrates
2. Subsurface Soil: USEPA Adjusted Residential Soil RSLs for human health and literature-based ESVs for plants and soil invertebrates (if less than 2 feet)
3. Groundwater: USEPA Adjusted tap water RSLs and federal MCLs for human health and literature-based marine surface water screening values and BTAG marine screening values to conservatively evaluate potential risks to ecological receptors from groundwater discharge to surface water. Marine screening values will be used because the salinity of the York River in the vicinity of CAX (measured at Gloucester Point [VIMS, 2012)) is between 16 and 24 parts per trillion, which is in the marine range (>10 parts per trillion).

A quantitative HHRA (conducted in accordance with USEPA guidance and as previously described in **Section 2.3.2.1**) and an ERA (through Step 3a) will be conducted to identify the COPCs for each medium.

The COPC concentrations will be compared to the background 95 percent UTLs (CH2M HILL, 2011b), where available and applicable, to determine if the detected concentrations are consistent with the base background concentrations. If the COPC concentrations exceed the background 95 percent UTL, further evaluation will be conducted to consider whether the COPC concentrations may be attributed to a release or may be associated with background conditions (such as comparing site data to the maximum base background concentrations). If the results of this evaluation potentially indicate that site concentrations are not consistent with background conditions, then the COPC concentrations may be attributed to a release and the COPC should be considered a site-related COC. Specific PAL values and laboratory detection and quantitation limits (QLs) are included in the Reference Limits and Evaluation Tables (**Appendix A-1**).

2.3.5 How will the data be used?

The results from the test pits will be used to determine the lateral extent of buried material at AOC 8. This information will be considered when determining possible future remedial options.

The lithologic data will be used to identify the aquifer encountered and potential geotechnical properties of soils. Groundwater data (such as static water level data and hydraulic slug tests) will be used to determine the general groundwater conditions, including depth to water, rate of groundwater flow, and directions of groundwater flow. This information will be incorporated into the CSM for the site and utilized in the discussion of contaminant fate and transport.

The existing and proposed soil data, and the proposed groundwater data, will be used to determine the nature and extent of contamination and will be used to appropriately assess potential human health and ecological risks at the site. The HHRA will estimate the likelihood of adverse impacts to current and potential future users of the site, based on the current and potential future use of the site. The ERA will estimate the likelihood of potential risks to ecological receptors at the site and the potential for ecologically significant transport of site-related constituents to the York River.

Wet chemistry soil data (TOC, pH, and grain size) will be collected to further characterize the soil medium and assist in completing the ERA. Natural attenuation parameter data in groundwater (wet chemistry parameters – nitrate, nitrite, sulfate, sulfide, alkalinity, methane, ethane, and ethane) will be collected to assist in determining the degradation and mobility of VOCs and inorganic constituents.

One Toxicity Characteristic Leaching Procedure (TCLP) composite soil and one TCLP composite groundwater sample will be collected from investigation-derived waste (IDW) to characterize media for disposal purposes.

2.3.6 What types of data are needed?

Section 2.5 contains detailed information on the types of data needed for this project, including sample locations and sample depth intervals. In general, additional test pits and analytical soil and groundwater sample data are required for this project to determine the nature and extent of contamination and to complete the HHRA and ERA. All analytical samples will be submitted to an offsite, subcontracted laboratory for analysis. Refer to **Section 2.5** and **Section 3.0** for sample locations, numbers, rationale, and methodology. Sample locations are provided on **Figure 7**.

2.3.7 Are there any special data quality needs, field or laboratory, in order to support environmental decisions?

The data will be used in an HHRA and an ERA to make further investigation and action decisions; therefore, the DV will qualify data according to the Measurement Performance Criteria (MPC) outlined in **Section 2.4** for field QC samples and the Laboratory QC Samples Table in **Appendix A** for laboratory QC samples. These MPC are consistent with the DoD Quality Systems Manual (QSM) as applicable and laboratory in-house limits where the QSM does not apply.

The data collected from AOC 8 will be validated internally by CH2M HILL. This process is outlined in **Section 2.3.9**.

2.3.8 Where, when, and how should the data be collected or generated?

Detailed information on where, when, and how the data will be collected is provided in **Section 3**. Data generated at the subcontract laboratory(s) will be reported in a data package equivalent to a USEPA Contract Laboratory Program level IV deliverable. This data package includes a case narrative, all field sample results, QC forms, and raw data. An electronic data deliverable will also be required.

2.3.9 How will the data be evaluated?

Data will undergo an evaluation for quality and completeness at the laboratory and will be validated by CH2M HILL DVs. Specific verification and validation steps are detailed in **Table 2-4**, *Data Verification and Validation (Steps I and IIa/IIb) Process Table* (**Section 2.3.11**). In general:

- Deviations from the SAP will be reviewed to assess whether CA is warranted and to assess impacts to the achievement of project objectives.
- To assess whether a sufficient quantity of acceptable data are available for decision-making, the data will be reconciled with the MPC following validation and review of data quality indicators (DQIs).
- For duplicate sample results, the most conservative value will be used for project decisions.
- Field and laboratory precision will be compared as relative percent difference (RPD) between the two results.
- For statistical calculations in the ERA, non-detect values will be represented by a concentration equal to one-half the sample reporting limit.

2.3.10 How will the data usability be documented?

The PM, PC, and other team members will be responsible for compiling the data. The data will then be presented to the CAX Partnering Team who, as a whole, will evaluate the data usability according to project objectives. Any qualifications made to the data during data validation will be included for consideration; possible qualifications that may be applied to the data during validation are as follows:

- When major QC deficiencies are encountered, data will be qualified with an R and in most cases are not considered usable for project decisions. If R-qualified data are used in evaluations and, ultimately, project decisions, the rationale for their use will be included in the RI Report. The R-qualifier is defined as follows:
  - R = Rejected result. Result not reliable.
- For minor QC deficiencies that will not affect the usability of the data, data may be qualified as estimated with the following qualifiers: J, UJ, K, L, or UL. These qualifiers are defined as follows:
  - J = Analyte present. Reported value may or may not be accurate or precise.
  - UJ = Analyte not detected. QL may be inaccurate or imprecise.
  - K = Analyte present. Reported value may be biased high. Actual value is expected to be lower.
  - L = Analyte present. Reported value may be biased low. Actual value is expected to be higher.
  - UL = Analyte not detected. QL is probably higher.
- Additional qualifiers that may be applied to data by the validator are:
  - B = Not detected substantially above the level reported in laboratory or field blanks. This detection is attributed to blank contamination and is to be treated as a non-detect.
  - N = Tentative identification. The analyte is considered present, though special methods may be needed to confirm its presence or absence in future sampling efforts.
  - NJ = Qualitative identification is questionable due to poor resolution. Presumptively present at approximate quantity.
  - U = Not detected.

Data usability will be documented in data tables and discussed in the data quality evaluation, both of which will be provided as part of the RI report. Data tables will reflect the reported concentration of analytes, whether the analyte was detected, and what, if any, data qualifiers accompany the result. The data quality evaluation will discuss the use of specific data qualifiers and their impact on decision-making, the overall quality of the data set, and any data usability limitations determined by the CAX Partnering Team.

2.3.11 Data Verification and Validation (Steps I and IIa/IIb) Process Table

Data will be collected as detailed in **Section 3**, and it will be reviewed for quality and completeness as detailed in the Data Verification and Validation (Steps I and IIa/IIb) Process Table (**Table 2-4**). More information about data validation and usability is provided in **Section 2.3.10.**

TABLE 2-4
Data Verification and Validation (Steps I and IIa/IIb) Process Table

Data Review Input	Description	Responsible for Verification	Internal/ External
Field Notebooks	Field notebooks will be reviewed internally and placed into the project file for archival at project closeout.	FTL / CH2M HILL	Internal
Chains-of-Custody and Shipping Forms	Chain-of-custody forms and shipping documentation will be reviewed internally upon their completion and verified against the packed sample coolers they represent. The shipper's signature on the chain-of-custody will be initialed by the reviewer, a copy of the chains-of-custody retained in the site file, and the original and remaining copies taped inside the cooler for shipment. Chains-of-custody will also be reviewed for adherence to the SAP by the PC.	FTL / CH2M HILL PDM / CH2M HILL PC / CH2M HILL	Internal & External
Sample Condition upon Receipt	Any discrepancies, missing, or broken containers will be communicated to the PDM in the form of laboratory logins.	PDM / CH2M HILL	External
Documentation of Laboratory Method Deviations	Laboratory Method Deviations will be discussed and approved by the PC. Documentation will be incorporated into the case narrative, which becomes part of the final hardcopy data package.	PC / CH2M HILL	External
Electronic Data Deliverables	Electronic Data Deliverables will be compared against hardcopy laboratory results (10 percent check).	PDM / CH2M HILL	External
Case Narrative	Case narratives will be reviewed by the DV during the data validation process. This is verification that they were generated and applicable to the data packages.	DV / CH2M HILL	External
Laboratory Data	All laboratory data packages will be verified internally by the laboratory performing the work for completeness and technical accuracy prior to submittal.	Respective Laboratory QAO	Internal
Laboratory Data	The data will be verified for completeness by the PDM.	PDM / CH2M HILL	External
Audit Reports	Upon report completion, a copy of all audit reports will be placed in the site file. If CAs are required, a copy of the documented CA taken will be attached to the appropriate audit report in the QA site file. Periodically, and at the completion of site work, site file audit reports and CA forms will be reviewed internally to ensure that all appropriate CAs have been taken and that CA reports are attached. If CAs have not been taken, the site manager will be notified to ensure action is taken.	PM / CH2M HILL PC / CH2M HILL	Internal
CA Reports	CA reports will be reviewed by the PC or PM and placed into the project file for archival at project closeout.	PM / CH2M HILL PC / CH2M HILL	External

TABLE 2-4
Data Verification and Validation (Steps I and IIa/IIb) Process Table

Data Review Input	Description	Responsible for Verification	Internal/ External
Laboratory Methods	Ensure the laboratory analyzed samples using the correct methods.	PC / CH2M HILL	External
Target Compound List and Target Analyte List	Ensure the laboratory reported all analytes from each analysis group.	PC / CH2M HILL	External
Reporting Limits	Ensure the laboratory met the project-designated QLs. If QLs were not met, the reason will be determined and documented.	PC / CH2M HILL	External
Field SOPs	Ensure that all field SOPs were followed.	FTL /CH2M HILL	Internal
Laboratory SOPs	Ensure that approved analytical laboratory SOPs were followed.	Respective Laboratory QAO	Internal
Raw Data	10 percent review of raw data to confirm laboratory calculations.	DV / CH2M HILL	External
Onsite Screening	All non-analytical field data will be reviewed against SAP requirements for completeness and accuracy based on the field calibration records.	FTL / CH2M HILL	Internal
Documentation of Method QC Results	Establish that all required QC samples were run.	DV / CH2M HILL	External
Documentation of Field QC Sample Results	Establish that all required QC samples were run.	PC / CH2M HILL	Internal
DoD ELAP Evaluation	Ensure that each laboratory is DoD ELAP-Certified for the analyses they are to perform. Ensure evaluation timeframe does not expire.	PC / CH2M HILL	External
Analytical data for VOCs, PAHs, Pesticides, PCBs, Metals (total and dissolved), Mercury (total and dissolved), and Hexavalent Chromium in all matrixes analyzed, such as groundwater, surface soil, and/or subsurface soil.	Analytical methods and laboratory SOPs as presented in this SAP will be used to evaluate compliance against QA/QC criteria. Should adherence to QA/QC criteria yield deficiencies, data may be qualified. The data qualifiers used are those presented in *Region III Modifications to the National Functional Guidelines for Organic Data Review* (USEPA, September 1994) and in *Region III Modifications to the Laboratory Data Validation Guidelines for Inorganic Data Review* (USEPA, April 1993). National Functional Guidelines will not be used for data validation; however, the specific qualifiers listed therein may be applied to data should non-conformances against the QA/QC criteria as presented in this SAP be identified.	DV / CH2M HILL	External
Analytical data for wet chemistry or grain size in all matrixes analyzed, such as groundwater, surface soil, and/or subsurface soil.	Wet chemistry (NAIPs) and grain size analytical data will not undergo third-party data validation, but are subject to all other previously detailed data review.	NA	NA

2.4 Field Quality Control Samples

Field QC samples will be collected to assist in evaluating whether the results reported from the field effort meet the precision, accuracy, and representativeness requirements for this project. Presented below in **Tables 2-5A – 2-5G** are details about the frequency at which each QC sample will be collected, what constitutes acceptable field QC results, and what aspect of data quality is indicated by the outcome of each QC sample.

TABLE 2-5A
Measurement Performance Criteria Table for Field QC Samples
Matrix: **Surface Soil, Subsurface Soil**[1]
Analytical Group: **PAHs, Pesticides, PCBs, Hexavalent Chromium**[2]
Concentration Level: **Medium / Low**

QC Sample	Analytical Group	Frequency	DQIs	MPC
Field Duplicate	PAHs, Pesticides, PCBs, Hexavalent Chromium	1 per 10 field samples	Precision	RPD ≤ 30%
Equipment Blank		1 per day of sampling, per type of equipment	Bias/ Contamination	Target analytes ≤ 1/2 LOQ
Cooler Temperature Indicator		1 per cooler to the laboratory	Representativeness	Temperature ≤ 6 degrees Celsius (°C)

[1] Field QA/QC will be collected separately for each matrix listed.
[2] Field QA/QC as described in this table will be collected and analyzed for each of the analytical groups listed.

TABLE 2-5B
Measurement Performance Criteria Table for Field QC Samples
Matrix: Surface Soil, Subsurface Soil[1]
Analytical Group: Metals, including Mercury [2]
Concentration Level: Medium / Low

QC Sample	Analytical Group	Frequency	DQIs	MPC
Field Duplicate	Metals, including Mercury	1 per 10 field samples	Precision	RPD ≤ 20%
Equipment Blank		1 per day of sampling, per type of equipment	Bias/ Contamination	Target analytes ≤ 1/2 LOQ
Cooler Temperature Indicator		1 per cooler to the laboratory	Representativeness	Temperature ≤ 6C

[1] Field QA/QC will be collected separately for each matrix listed.
[2] Field QA/QC as described in this table will be collected and analyzed for each of the analytical groups listed.

TABLE 2-5C
Measurement Performance Criteria Table for Field QC Samples
Matrix: **Surface Soil, Subsurface Soil**[1]
Analytical Group: **Wet Chemistry (TOC, pH)**[2]
Concentration Level: **Medium**

QC Sample	Analytical Group	Frequency	DQIs	MPC
Cooler Temperature Indicator	Wet Chemistry	1 per cooler to the laboratory	Representativeness	Temperature ≤ 6°C

[1] Field QA/QC will be collected separately for each matrix listed.
[2] Field QA/QC as described in this table will be collected and analyzed for each of the analytical groups listed.

TABLE 2-5D
Measurement Performance Criteria Table for Field QC Samples
Matrix: **Surface Soil, Subsurface Soil**
Analytical Group: **Grain-size**

QC Sample	Analytical Group	Frequency	DQIs	MPC
None	Grain size	Not applicable (NA)	NA	NA

TABLE 2-5E
Measurement Performance Criteria Table for Field QC Samples
Matrix: **Groundwater**
Analytical Group: **VOCs**
Concentration Level: **Medium**

QC Sample	Analytical Group	Frequency	DQIs	MPC
Field Duplicate	VOCs	1 per 10 field samples	Precision	RPD ≤ 30%
Equipment Blank		1 per day of sampling, per type of equipment	Bias/ Contamination	Target analytes ≤ 1/2 LOQ
Trip Blank		1 per cooler to the laboratory	Bias/ Contamination	Target analytes ≤ 1/2 LOQ
Cooler Temperature Indicator		1 per cooler to the laboratory	Representativeness	Temperature ≤ 6 °C

TABLE 2-5F
Measurement Performance Criteria Table for Field QC Samples
Matrix: **Groundwater**
Analytical Group: **Total Metals, including Mercury; Dissolved Metals, including Mercury**[1]
Concentration Level: **Medium / Low**

QC Sample	Analytical Group	Frequency	DQIs	MPC
Field Duplicate	Metals, including Mercury	1 per 10 field samples	Precision	RPD ≤ 20%
Equipment Blank		1 per day of sampling, per type of equipment	Bias/ Contamination	Target analytes ≤ 1/2 LOQ
Cooler Temperature Indicator		1 per cooler to the laboratory	Representativeness	Temperature ≤ 6°C

[1] Field QA/QC as described in this table will be collected and analyzed for each of the analytical groups listed.

TABLE 2-5G
Measurement Performance Criteria Table for Field QC Samples
Matrix: **Groundwater**
Analytical Group: **Wet Chemistry (Methane, Ethane, Ethene; Alkalinity, Nitrate, Nitrite, Sulfate; Sulfide)**[1]
Concentration Level: **Medium**

QC Sample	Analytical Group	Frequency	DQIs	MPC
Cooler Temperature Indicator		1 per cooler to the laboratory	Representativeness	Temperature ≤ 6°C

[1] Field QA/QC as described in this table will be collected and analyzed for each of the analytical groups listed.

2.5 Sampling Design and Rationale

The CAX Partnering Team met to scope this investigation, as outlined in **Section 2.1**. During these meetings, the Team discussed and agreed to the proposed sampling rationale for AOC 8. **Figure 7** presents the proposed sample locations for each medium to be evaluated, including the proposed test pit and soil and monitoring wells locations. Exact sample locations will ultimately be field-determined, but will be in close proximity to the proposed sample locations.

The proposed sampling scheme and associated rationale for AOC 8 are included in **Table 2-6**:

QC samples will be collected as described in **Section 2.4**.

Samples from each medium will be analyzed as outlined in **Section 3.3** and will include:

- Discreet soil (surface and subsurface): PAHs, PCBs, total inorganic constituents, hexavalent chromium (two samples), total chromium (one sample), pesticides (one sample) and wet chemistry (for surface soil: TOC, pH, grain size; for subsurface soil: pH)
- 5-point composite soil (surface and subsurface): PAHs, pesticides, PCBs, total inorganic constituents and wet chemistry (TOC and pH)
- Groundwater: VOCs, total inorganic constituents, dissolved inorganic constituents, and wet chemistry (nitrate, nitrite, sulfate, sulfide, alkalinity, methane, ethane, and ethane).

Analytical methods to be employed by the laboratory for each analyte and their respective PALs are listed in **Appendix A**.

Section 3.1 provides a detailed outline of the field methods to be performed.

TABLE 2-6
AOC 8 Proposed Sampling Scheme and Associated Rationale

Media	Sample Count		Analysis	Rationale
Surface Soil	14	3	PAHs, PCBs, inorganic constituents, TOC, pH, grain size	Collected to determine if site related contaminants exist outside current site study area. The data will also be used to determine the nature and extent of contamination and support an HHRA and ERA.
		3	PAHs, PCBs, inorganic constituents, TOC, pH, grain size	Collected to determine the nature and extent of contamination within the vicinity of the burial area south of the site entrance road (no samples were previously collected from this area; therefore there is a spatial data gap in this area). The data will also be used to determine the nature and extent of contamination and support an HHRA and ERA.
		1	PAHs, PCBs, inorganic constituents, TOC, pH, grain size	Collected to determine if site related contaminants exist outside the buried debris area at the end of the site entrance road (no samples were previously collected from this area; therefore there is a spatial data gap in this area). The data will also be used to determine the nature and extent of contamination and support an HHRA and ERA.
		1	PAHs, pesticides, PCBs, inorganic constituents, TOC, pH, grain size	Collected to determine if pesticides and site related contaminants are accumulating in the low lying area of the site (no samples were previously collected from this area; therefore there is a spatial data gap in this area). The data will also be used to determine the nature and extent of contamination and support an HHRA and ERA.
		1	PAHs, PCBs, inorganic constituents, hexavalent chromium, TOC, pH, grain size	Collected to determine if site related contaminants are migrating from the area immediately downgradient of the 2008 test pit location, where the most extensive buried debris was identified. The data will also be used to determine the nature and extent of contamination and support an HHRA and ERA. Hexavalent chromium data will be used to determine the valency of high chromium concentrations detected during the 2008 SI in order to refine the HHRA.
		1	Total and hexavalent chromium	Collected to determine the valency of high chromium concentrations detected during the 2008 SI in order to refine the HHRA.
		4	PAHs, pesticides, PCBs, inorganic constituents, TOC, pH	5-point composite samples collected to address the EPA's concern that there are a limited number of soil samples within the area of surface debris and within the immediate area of visible debris within the side of the berm. The data will also be used to determine the nature and extent of contamination and support an HHRA and ERA.

Media	Sample Count		Analysis	Rationale
Subsurface Soil	13	3	PAHs, PCBs, inorganic constituents, pH	Collected to determine if site related contaminants exist outside current site study area. The data will also be used to determine the nature and extent of contamination and support an HHRA and ERA.
		3	PAHs, PCBs, inorganic constituents, pH	Collected to determine the nature and extent of contamination within the vicinity of the burial area south of the site entrance road (no samples were previously collected from this area; therefore there is a spatial data gap in this area). The data will also be used to determine the nature and extent of contamination and support an HHRA and ERA.
		1	PAHs, PCBs, inorganic constituents, pH	Collected to determine if site related contaminants exist outside the buried debris area at the end of the site entrance road (no samples were previously collected from this area; therefore there is a spatial data gap in this area). The data will also be used to determine the nature and extent of contamination and support an HHRA and ERA.
		1	PAHs, pesticides, PCBs, inorganic constituents, TOC, pH, grain size	Collected to determine if pesticides and site related contaminants are accumulating in the low lying area of the site (no samples were previously collected from this area; therefore there is a spatial data gap in this area). The data will also be used to determine the nature and extent of contamination and support an HHRA and ERA.
		1	PAHs, PCBs, inorganic constituents, pH	Collected to determine if site related contaminants are migrating from the area immediately downgradient of the 2008 test pit location, where the most extensive buried debris was identified. The data will also be used to determine the nature and extent of contamination and support an HHRA and ERA.
		4	PAHs, pesticides, PCBs, inorganic constituents, TOC, pH	5-point composite samples collected to address the EPA's concern that there are a limited number of soil samples within the area of surface debris and within the immediate area of visible debris within the side of the berm. The data will also be used to determine the nature and extent of contamination and support an HHRA and ERA.

Media	Sample Count		Analysis	Rationale
Groundwater	6	2	VOCs, total and dissolved inorganic constituents, nitrate, nitrite, sulfate, sulfide, alkalinity, methane, ethane, and ethane	Collected to determine if groundwater contaminant concentrations exist outside the debris disposal areas (no groundwater samples were previously collected from outside the buried debris; therefore there is a spatial data gap in this area).The data will also be used to assist in determining the degradation and mobility of VOCs and metals and support an HHRA and ERA.
		1	VOCs, total and dissolved inorganic constituents, nitrate, nitrite, sulfate, sulfide, alkalinity, methane, ethane, and ethane	Collected to determine if groundwater contaminant concentrations exist in the vicinity of the 2008 test pit location, where the most extensive buried debris was identified. The data will also be used to assist in determining the degradation and mobility of VOCs and metals and support an HHRA and ERA.
		1	VOCs, total and dissolved inorganic constituents, nitrate, nitrite, sulfate, sulfide, alkalinity, methane, ethane, and ethane	Collected to confirm groundwater contaminant concentrations detected during the 2008 SI (in the immediate vicinity of the 2008 SI groundwater sample where low level PCE concentrations were detected). The data will also be used to assist in determining the degradation and mobility of VOCs and metals and support an HHRA and ERA.
		2	VOCs, total and dissolved inorganic constituents, nitrate, nitrite, sulfate, sulfide, alkalinity, methane, ethane, and ethane	Collected to determine if groundwater contaminant concentrations are migrating into the York River at concentrations that may pose risk to human health or the environment. The data will also be used to assist in determining the degradation and mobility of VOCs and metals and support an HHRA and ERA.

3 Field Project Implementation

3.1 Field Project Tasks

The following sections provide a summary of field activities.

3.1.1 Project Logistics

In general, work will be performed in Level D personal protective equipment (PPE), which includes hard hat, safety glasses, safety toed boots, hearing protection, and impermeable gloves. Upgrades to higher levels of PPE will be presented in the Health and Safety Plan (HASP), which will be prepared as part of mobilization efforts and available to all field personnel during field activities. In addition, a photoionization detector (PID) will be used for monitoring sample locations for VOCs in the breathing zone as a health and safety precaution, which will be discussed in the HASP.

All field activities will be conducted during normal working hours unless requested otherwise by the Navy. Following monitoring well installation activities, the site will be restored to its original condition.

3.1.2 Field Project Tasks

Applicable Standard Operating Procedures (SOPs) for project tasks outlined in this section are listed in **Section 3.2**.

Utility Clearance

Utility clearance at AOC 8 will be performed prior to the start of subsurface investigation activities. The CH2M HILL field staff will coordinate subsurface utility clearance with Miss Utility of Virginia ([800] 552-7001 or 811) and obtain available utility maps from CAX (Mr. James Michener at [757] 636-4084). In addition, a third party utility clearance subcontractor will be procured by CH2M HILL to clearly mark utilities in the vicinity of all proposed test pit and sampling locations. Any test pit or sampling location interfering with utility locations will be relocated to avoid impact to utilities while continuing to meet the intent of the sampling rationale. Proposed monitoring wells located within 5 feet of a marked utility will be relocated. If a monitoring well needs to be relocated, the field team will use their best judgment in relocating the well and notifying the PM of its new location.

Mobilization

Following approval of the SAP, CH2M HILL will begin mobilization activities. Before mobilization, all field team members will review this SAP and the project-specific HASP. A field team kickoff meeting will be held to ensure that personnel are familiar with the scope of the field activities and discuss any safety issues. Mobilization activities include coordination with base personnel and preparation of field equipment.

Vegetation Clearance

AOC 8 is located in a wooded area and some locations may require vegetation clearing to gain access. If required, prior to sampling activities, vegetation will be cleared in a manner that minimally impacts the site. Trees less than 3 inches in diameter will be cut and/or low-hanging tree limbs will be removed. All cut vegetation will remain onsite. Cutting will be accomplished through either manual or mechanical methods. Selection of the appropriate land-clearing strategy will be based on the type and density of vegetation, topography, drainage patterns, terrain and soil conditions, and the level of effort required to maintain environmental and natural resource protection.

Test Pitting

A minimum of 11 test pits will be excavated to delineate the lateral extent of buried debris at AOC 8 (**Figure 5**). Due to the depth of buried debris encountered during the SI, test pits will be completed to 20 feet bgs. If buried debris is encountered in some of the test pits, additional test pits will be excavated as warranted in order to

determine the lateral extent of buried debris. Since the maximum excavation depth of an excavator is generally around 20 feet bgs, the vertical test pit depths will not exceed 20 feet. The type of debris, depths, and other pertinent information will be recorded in accordance with the Preparing Field Log Books SOP.

Soil Sampling

Nine discreet surface (0 to 6 inches) and nine discreet subsurface (6 to 24 inches) soil samples will be collected using a stainless steel hand auger and analyzed for site-related contaminants (PAHs, PCBs, and inorganic constituents plus hexavalent chromium [one surface soil sample, in the vicinity of SO04]), one surface (0 to 6 inches) soil sample will be collected and analyzed for total and hexavalent chromium (in the vicinity of SO06), and one discreet surface and subsurface soil sample and four 5-point surface and subsurface composite samples will be collected and analyzed for pesticides and site-related contaminants (PAHs, PCBs, and inorganic constituents) as outlined in **Section 3.3**. Any relevant information pertaining to evidence of contamination or visual observations will be recorded in the sample log book. Samples will be homogenized prior to placement in the laboratory-prepared sample container. The SOPs to be used are referenced in **Section 3.2**.

Monitoring Well Installation and Development

A total of six monitoring wells will be installed at AOC 8. Prior to monitoring well installation, soil samples will be collected for lithologic characterization at each location in accordance with Unified Soil Classification System standards, and field screening of sample headspace will be conducted using a PID as the boreholes are advanced. Soil samples will be collected continuously from the ground surface to the final depth of the borehole using either DPT or split-spoon sampling.

Monitoring wells will be installed using a 4.25-inch-inner-diameter hollow-stem auger drilling methods. Each monitoring well will be constructed with 2-inch nominal-diameter Schedule 40 polyvinyl chloride (PVC) screen and installed at an anticipated maximum depth of 40 feet. The monitoring well screens will be machine-slotted 0.010-inch PVC.

A silica filter pack will be placed around the annular space of the well screen from the bottom of the boring extending to a depth of 2 feet above the top of the screen. A 2-foot bentonite layer will be placed above the top of the sand pack. After the bentonite has been hydrated, a cement-bentonite grout will be placed in the remaining annular space to the ground surface. The monitoring wells will be completed with a steel protective casing finished above grade. A locking watertight cap will be placed on the PVC pipe and the wells will be clearly marked.

Following installation, each monitoring well will be developed by the drilling subcontractor using a submersible pump. Each monitoring well will be developed using a combination of surging and pumping throughout the well screen. During monitoring well development, CH2M HILL will measure water quality parameters (pH, oxidation reduction potential [ORP], temperature, conductivity, turbidity, and dissolved oxygen [DO]) approximately every 5 minutes with a Horiba U-22 water quality meter or similar water quality meter and record data in the field notebook. In addition, the water quality meter will be calibrated daily (at a minimum) and documented in the field notebook. At least three well volumes of water will be removed in addition to the amount of water added during the installation process. Development will continue until the water is clear and free of sediment or until 2 hours of development have passed, whichever comes first. Development information, including ORP, temperature, conductivity, turbidity, DO, and gallons removed will be recorded in the field logbook.

Water-Level Survey

Following monitoring well installation and development, and prior to the start of groundwater sampling, the depth to groundwater to the nearest 0.01 foot will be measured from all monitoring wells. Measurements will be made from the lip of the PVC riser, which will be marked with an indelible marker. If during removal of the locking well cap, the well demonstrates signs of being under pressure (e.g., escaping air sounds, cap being pushed off by

pressure), then the depth to water in that monitoring well will not be measured for a period of 1 hour in order to allow for the water level to equilibrate. Measurements of depth to water and time will be recorded in the field logbook.

Groundwater Sampling

Each newly-installed monitoring well will be sampled using a Monsoon pump (or similar) using low-flow sampling protocol and the samples analyzed for VOCs, total and dissolved inorganic constituents, and natural attenuation parameters (wet chemistry parameters – nitrate, nitrite, sulfate, sulfide, alkalinity, methane, ethane, and ethane) as outlined in **Section 3.3**. All groundwater samples will be collected by placing the sample tubing intake in the middle of the vertical screen interval. Water quality parameters (pH, ORP, temperature, conductivity, turbidity, and DO) will be measured with a Horiba U-22 water quality meter or similar and data will be recorded in the field notebook approximately every 5 minutes. In addition, the water quality meter will be calibrated daily (at a minimum) and documented in the field notebook.

DO will be field-verified using CHEMetrics test kits, and ferrous iron will be measured to evaluate redox potential to assist in determining the mobility of inorganic constituents in groundwater. Sampling will begin when water quality parameters have stabilized over three consecutive readings (i.e., when measurements agree as follows):

- pH within 0.1 pH unit
- Conductivity within 3 percent
- DO within 10 percent
- ORP within 10 millivolts
- Turbidity measurements within 10 percent or turbidity is minimized to the extent practical for the well

If the recharge rate of the well is so low that the well goes dry despite a flow rate of 0.1 liter per minute, purging will stop and the well allowed to recharge before purging continues. Sampling will be conducted once at least one well volume has been removed.

Slug Testing

Rising and falling head slug tests will be performed in all monitoring wells to evaluate aquifer hydraulic conductivity in the vicinity of the well. Slug tests will be performed after groundwater sampling, using solid PVC slugs with clean bailer rope. To conduct the falling head test, the PVC slug will be quickly added to the well and the water level allowed to stabilize to within 90 percent of the original static water level. The rising head test will then be started by rapidly removing the PVC slug, which will cause a drop in the water level. A pressure transducer, such as a MiniTroll transducer and data recorder capable of measuring to 0.01 foot, will be used along with an electronic recording device such as an In-Situ Hermit to obtain water-level readings during the slug testing activities. The transducer and recording device will be used to record changes in pressure associated with water-level recovery. A slug test will be considered complete when water levels have recovered 90 percent of the well's pre-test level.

Equipment Decontamination

All non-disposable sampling equipment will be decontaminated before and immediately after each use, as described in the applicable SOPs referenced in **Section 3.2**. Equipment will be decontaminated with Liquinox (or equivalent solution) and allowed to dry between each use. The water-level indicator will be scrubbed with deionized water between each measurement. All decontamination liquids will be containerized and handled according to the following IDW Handling section. Disposable equipment (such as tubing for low-flow sampling, filters, paper towels, and disposable PPE) will be disposed as ordinary trash.

Heavy equipment such as drill rig equipment (augers, rods, or split spoons) will be high temperature pressure washed before use at each new monitoring well location. A decontamination pad will be set up onsite to prevent

runoff of the decontamination water and to allow easy collection of decontamination fluids into a 55-gallon drum for treatment as IDW.

Investigation-derived Waste Handling

All IDW generated during this project is anticipated to be non-hazardous; however, it will be fully characterized in order to ensure it is transported and disposed in accordance with all pertinent regulations.

The IDW generated during monitoring well installation and sampling will be soil cuttings, monitoring well development water, purge water, and solutions used to decontaminate non-disposable sampling equipment. Solid and aqueous IDW will be containerized separately in Department of Transportation-approved 55-gallon drums, which will be stored onsite. Secondary containment for IDW storage will be large enough to contain 10 percent of the volume of containers or the volume of the largest container, whichever is greater. The IDW storage area will be covered with a tarp to minimize potential exposure to the drums and to prevent rain water from accumulating in the secondary containment. It is anticipated that 20 drums of solid IDW and 15 drums of aqueous IDW will be generated.

Unless there is evidence of gross contamination, one composite soil sample and one composite groundwater sample will be collected for the purpose of IDW characterization. These samples will be analyzed for the full TCLP list - ignitability, corrosivity, and reactivity. All drums will be removed from the site within 90 days of generation (with Navy approval).

Disposable equipment, including PPE and paper towels, will be disposed as ordinary trash.

Surveying

Following sample collection, soil sample locations will be marked in the field using pin flags, with the sample station clearly labeled. All soil sample locations will be horizontally located and all monitoring wells will be horizontally and vertically located by a Virginia-licensed surveyor. The surveyor will provide coordinates of all horizontal points X and Y to the nearest 0.5 foot and vertical points Z to the nearest 0.01 foot (0.1 foot for unpaved ground surface elevations).

Quality Control

QC samples will be collected as outlined in **Appendix A, Tables A-3a** through **A-3n**. Field and laboratory activities will be implemented following the applicable SOPs, as referenced in **Section 3.2** and **Appendix A, Tables A-2a** through **A-2c**.

3.2 Field SOPs Reference Table

Applicable SOPs for project tasks are outlined in **Table 3-1** and included as **Appendix C**.

TABLE 3-1
Field SOPs Reference Table

SOP Reference Number	Title/Author	Revision Date or Version Number	Location of SOP (if not included in the SAP)	Any planned deviation for Project Work	Comments
001_BlankPrep	Equipment Blank and Field Blank Preparation	8/2012	\\orion\proj\CLEANII\SOPS\1 - MASTER\Sample Preparation and Handling	NA	NA
002_COC	Chain-of-Custody	8/2012	\\orion\proj\CLEANII\SOPS\1 - MASTER\Sample Preparation and Handling	NA	NA
003_Decon	Decontamination of Personnel and Equipment	8/2012	\\orion\proj\CLEANII\SOPS\1 - MASTER\Decontamination	NA	NA
004_DeconRig	Decontamination of Drilling Rigs and Equipment	8/2012	\\orion\proj\CLEANII\SOPS\1 - MASTER\Decontamination	NA	NA
005_DrumSamp	Sampling Contents of Tanks and Drums	8/2012	\\orion\proj\CLEANII\SOPS\1 - MASTER\Other	NA	NA
006_Disposal	Disposal of Waste Fluids and Solids	8/2012	\\orion\proj\CLEANII\SOPS\1 - MASTER\Decontamination	NA	NA
007_GPS	Global Positioning System	8/2012	\\orion\proj\CLEANII\SOPS\1 - MASTER\Other	NA	NA
008_HomoSamp	Homogenization of Soil and Sediment Samples	8/2012	\\orion\proj\CLEANII\SOPS\1 - MASTER\Sample Preparation and Handling	NA	NA
009_Trench	Trenching for Landfill Delineation	8/2012	\\orion\proj\CLEANII\SOPS\1 - MASTER\Soil Sampling	NA	NA
010_FieldLog	Preparing Field Log Books	8/2012	\\orion\proj\CLEANII\SOPS\1 - MASTER\Log Books	NA	NA
011_LowFlowSamp	Low-Flow Groundwater Sampling from Monitoring Wells	8/2012	\\orion\proj\CLEANII\SOPS\1 - MASTER\Groundwater Sampling	NA	NA
012_MiniRAE	Mini RAE Photoionization Detector (PID)	8/2012	\\orion\proj\CLEANII\SOPS\1 - MASTER\Health and Safety	NA	NA
013_MWInstall	General Guidance for Monitoring Well Installation	8/2012	\\orion\proj\CLEANII\SOPS\1 - MASTER\Hydrogeology	NA	NA
014_GWSamp	Groundwater Sampling from Monitoring Wells	8/2012	\\orion\proj\CLEANII\SOPS\1 - MASTER\Groundwater Sampling	NA	NA

TABLE 3-1
Field SOPs Reference Table

SOP Reference Number	Title/Author	Revision Date or Version Number	Location of SOP (if not included in the SAP)	Any planned deviation for Project Work	Comments
015_InstallMWShallow	Installation of Shallow Monitoring Wells	8/2012	\\orion\proj\CLEANII\SOPS\1 - MASTER\Hydrogeology	NA	NA
016_SBLog	Logging of Soil Borings	8/2012	\\orion\proj\CLEANII\SOPS\1 - MASTER\Soil Sampling	NA	NA
017_SoilSampShallow	Shallow Soil Sampling	8/2012	\\orion\proj\CLEANII\SOPS\1 - MASTER\Soil Sampling	NA	NA
018_Ship	Packaging and Shipping Procedures for Low-Concentration Samples	8/2012	\\orion\proj\CLEANII\SOPS\1 - MASTER\Sample Preparation and Handling	NA	NA
019_SlugTest	Aquifer Slug Testing	8/2012	\\orion\proj\CLEANII\SOPS\1 - MASTER\Hydrogeology	NA	NA
021_SoilSamp	Soil Sampling	8/2012	\\orion\proj\CLEANII\SOPS\1 - MASTER\Soil Sampling	NA	NA
021_UtilLoc	Locating and Clearing Underground Utilities	8/2012	\\orion\proj\CLEANII\SOPS\1 - MASTER\Utility Location	NA	NA
022_VOC SampGW	VOC Sampling-Water	8/2012	\\orion\proj\CLEANII\SOPS\1 - MASTER\Sample Preparation and Handling	NA	NA
023_WaterLevel	Water Level Measurements	8/2012	\\orion\proj\CLEANII\SOPS\1 - MASTER\Hydrogeology	NA	NA
024_FieldParam	Field Measurement of pH, Specific Conductance, Turbidity, Dissolved Oxygen, ORP, and Temperature Using a Water Quality Parameter Meter with Flow-through Cell	8/2012	\\orion\proj\CLEANII\SOPS\1 - MASTER\Field Parameters	NA	NA

3.3 Sample Details Table

Soil and groundwater samples collected as part of this RI will be analyzed as outlined in **Table 3-2**.

TABLE 3-2
Sample Details Table

				Aqueous											Solid							
							Wet Chemistry															
			Analysis Group	**VOCs**	**Total Inorganic constituents, including mercury**	**Dissolved Inorganic Constituents Metals, including mercury**	**Methane, Ethane, Ethene**	**Alkalinity**	**Nitrate, Nitrite, Sulfate**	**Sulfide**	**PAHs**	**Pesticides**	**PCBs**	**CrVI**	**PAHs**	**Pesticides**	**PCBs**	**Inorganic Constituents, including mercury**	**CrVI**	**Grain-size**	**Wet chemistry (pH and TOC)**	
CTO-055 CAX AOC 8 Remedial Investigation Sampling Fall 2012, tentative Main Laboratory ENCO - Orlando 10775 Central Port Drive Orlando, FL 32824 Ronnie Wambles - (407)826-5314 Hexavalent Chromium Laboratory ALS Environmental 1565 Jefferson Road, Building 300, Suite 360 Rochester, NY 14623 Deb Patton - (585)-672-7473			**Preparation and Analytical Method**	SW-846 5030/8260B	SW-846 6020A, 7470A	SW-846 6020A, 7470A	RSK-175	USEPA 310.2	SW-846 9056	SM 4500-S2-E (18th Ed.)	SW-846 8270D-SIM	SW-846 8081B	SW-846 8082A	SW-846 7199	SW-846 3550C/8270D-SIM	SW-846 3550C/8081B	SW-846 3550C/8082A	SW-846 6010C, 7471A	SW-846 7199	ASTM D422 (sieve only)	SW-846 9045D	Walkley Black
			Analytical Laboratory/ Analytical SOP Reference	VCGMS-05	MET-15, MET-03	MET-15, MET-03	VCG-11	WETS-47	WETS-57	WETS-61	SVCGMS-03	SVCG-04	SVCG-07	GEN-7199	SVCGMS-03	SVCG-04	SVCG-07	MET-05, MET-16	GEN-7199	AG-SOP-014B	WETS-56	WETS-90
			Data Package Turnaround Time	28 Calendar Days																		
			Container Type/ Volume required (if different than container volume)	3 of 40-milliliter (ml) Glass Vials	1 of 250-ml Plastic/100-mL	1 of 250-mL Plastic/100-mL	2 of 40-mL Vials	1 of 250-mL Plastic/50-mL		1 of 250-mL Plastic/50-mL	1 of 1L amber /500-mL	1 of 1L amber /500-mL	1 of 1L amber /500-mL	1 of 250-mL Plastic/25-mL	2 of 4-ounce(oz) glass/ 200-grams (g)			1 of 4-oz glass/150-g	1 of 4-oz glass/5-g	1 of 4-oz glass/150-g	1 of 4-oz glass/100-g	
			Preservative	HCl, Cool to <6° C	HNO_3, Cool to <6° C	HNO_3, Cool to <6° C	HCl, Cool to <6° C	Cool to < 6°C		ZnAc + NaOH, cool to < 6°C	Cool to < 6°C			Cool to < 6°C	Cool to < 6°C					None	Cool to < 6°C	
			Holding Time (Preparation/ Analysis)[2]	14 days	28 days for Mercury, 180 days others	28 days for Mercury, 180 days others	14 days	14 days	2 days, (28 days for Sulfate)	7 days	7days/ 40days			24-hours	14 days/40 days		365 days	28 days for Mercury, 180 days others	30 days to prep/ 7 days from prep to analysis	None	1 day	28 days
Matrix	**Station ID**	**Sample ID**	**Sampling Depth**																			
Groundwater Samples																						
GW	CAA08-MW01	CAA08-GW01-MMYY	NA	X	X	X	X	X	X	X												
	CAA08-MW02	CAA08-GW02-MMYY	NA	X	X	X	X	X	X	X												
	CAA08-MW03	CAA08-GW03-MMYY	NA	X	X	X	X	X	X	X												
	CAA08-MW04	CAA08-GW04-MMYY	NA	X	X	X	X	X	X	X												
	CAA08-MW05	CAA08-GW05-MMYY	NA	X	X	X	X	X	X	X												
	CAA08-MW06	CAA08-GW06-MMYY	NA	X	X	X	X	X	X	X												
Groundwater QA/QC Samples[3]																						
Field Duplicate	CAA08-MW01	CAA08-GW01P-MMYY	NA	X	X	X																
Matrix Spike	CAA08-MW02	CAA08-GW02-MMYY-MS	NA	X	X	X																
Matrix Spike Duplicate	CAA08-MW02	CAA08-GW02-MMYY-SD	NA	X	X	X																
Equipment Blank	CAA08-QC	CAA08-EBMMDDYY-GW	NA	X	X	X																
Trip Blank	CAA08-QC	CAA08-TBMMDDYY	NA	X																		

TABLE 3-2
Sample Details Table

				Aqueous											Solid							
							Wet Chemistry															
			Analysis Group	VOCs	Total Inorganic constituents, including mercury	Dissolved Inorganic Constituents Metals, including mercury	Methane, Ethane, Ethene	Alkalinity	Nitrate, Nitrite, Sulfate	Sulfide	PAHs	Pesticides	PCBs	CrVI	PAHs	Pesticides	PCBs	Inorganic Constituents, including mercury	CrVI	Grain-size	Wet chemistry (pH and TOC)	
Matrix	Station ID	Sample ID	Sampling Depth																			
Soil Samples																						
SS, SB	CAA08-MW01	CAA08-SS10-MMYY	0-6''												X		X	X	X	X	X	X
		CAA08-SB10-0H02-MMYY	6-24''												X		X	X			X	
	CAA08-MW02	CAA08-SS11-MMYY	0-6''												X		X	X		X	X	X
		CAA08-SB11-0H02-MMYY	6-24''												X		X	X			X	
	CAA08-MW03	CAA08-SS12-MMYY	0-6''												X		X	X		X	X	X
		CAA08-SB12-0H02-MMYY	6-24''												X		X	X			X	
	CAA08-MW04	CAA08-SS13-MMYY	0-6''												X		X	X		X	X	X
		CAA08-SB13-0H02-MMYY	6-24''												X		X	X			X	
	CAA08-SO14	CAA08-SS14-MMYY	0-6''												X		X	X		X	X	X
		CAA08-SB14-0H02-MMYY	6-24''												X		X	X			X	
	CAA08-SO15	CAA08-SS15-MMYY	0-6''												X		X	X		X	X	X
		CAA08-SB15-0H02-MMYY	6-24''												X		X	X			X	
	CAA08-SO16	CAA08-SS16-MMYY	0-6''												X		X	X		X	X	X
		CAA08-SB16-0H02-MMYY	6-24''												X		X	X			X	
	CAA08-SO17	CAA08-SS17-MMYY	0-6''												X		X	X		X	X	X
		CAA08-SB17-0H02-MMYY	6-24''												X		X	X			X	
	CAA08-SO18	CAA08-SS18-MMYY	0-6''															Chromium only	X			
	CAA08-SO19	CAA08-SS19-MMYY	0-6''												X	X	X	X		X	X	X
		CAA08-SB19-0H02-MMYY	6-24''												X	X	X	X			X	
Composite SS, Composite SB	CAA08-SO20	CAA08-SO20-MMYY	0-6'', 5 pt composite												X	X	X	X			X	X
		CAA08-SO20-0H02-MMYY	6-24'', 5 pt composite												X	X	X	X			X	
	CAA08-SO21	CAA08-SO21-MMYY	0-6'', 5 pt composite												X	X	X	X			X	X
		CAA08-SO21-0H02-MMYY	6-24'', 5 pt composite												X	X	X	X			X	
	CAA08-SO22	CAA08-SO22-MMYY	0-6'', 5 pt composite												X	X	X	X			X	X
		CAA08-SO22-0H02-MMYY	6-24'', 5 pt composite												X	X	X	X			X	
	CAA08-SO23	CAA08-SO23-MMYY	0-6'', 5 pt composite												X	X	X	X			X	X
		CAA08-SO23-0H02-MMYY	6-24'', 5 pt composite												X	X	X	X			X	

TABLE 3-2
Sample Details Table

				Aqueous											Solid							
							Wet Chemistry															
			Analysis Group	VOCs	Total Inorganic constituents, including mercury	Dissolved Inorganic Constituents Metals, including mercury	Methane, Ethane, Ethene	Alkalinity	Nitrate, Nitrite, Sulfate	Sulfide	PAHs	Pesticides	PCBs	CrVI	PAHs	Pesticides	PCBs	Inorganic Constituents, including mercury	CrVI	Grain-size	Wet chemistry (pH and TOC)	
Matrix	**Station ID**	**Sample ID**	**Sampling Depth**																			
Soil QA/QC Samples[3]																						
Field Duplicate	CAA08-MW01	CAA08-SS10P-MMYY	0-6''												X		X	X				
	CAA08-MW01	CAA08-SB10P-0H02-MMYY	6-24''												X		X	X				
	CAA08-SO18	CAA08-SS18P-MMYY	0-6''															Chromium only	X			
	CAA08-SO20	CAA08-SO20P-MMYY	0-6'', 5 pt composite												X	X	X	X				
		CAA08-SO20P-0H02-MMYY	6-24'', 5 pt composite												X	X	X	X				
Matrix Spike	CAA08-SO18	CAA08-SS18-MMYY-MS	0-6''																X			
	CAA08-SO19	CAA08-SS19-MMYY-MS	0-6''												X	X	X	X				
		CAA08-SB19-0H02-MMYY-MS	6-24''												X	X	X	X				
Matrix Spike Duplicate	CAA08-SO18	CAA08-SS18-MMYY-MS	0-6''																X			
	CAA08-SO19	CAA08-SS19-MMYY-SD	0-6''												X	X	X	X				
		CAA08-SB19-0H02-MMYY-SD	6-24''												X	X	X	X				
Equipment Blank	CAA08-QC	CAA08-EBMMDDYY-SO	NA		X	X					X	X	X	X								
			Total Number of Samples to the Laboratory:	11	11	11	6	6	6	6	1	1	1	1	34	16	34	36	5	9	26	13

Notes:
[1] For a complete reference of laboratory SOPs, see the Analytical SOP References Table.
[2] Maximum holding time is calculated from the time the sample is collected to the time the sample is prepared/analyzed.
[3] Field QC counts may change depending on the duration of field event. Frequency of QA/QC sample collection is noted on the Measurement Performance Criteria Table in Section 2.4 of the UFP-SAP and is as follows :

Field Duplicate - One per 10 field samples
MS/MSD - One pair per 20 field samples of similar matrix (including field duplicates)
Equipment Blank- For disposable equipment, one per week of sampling; for decontaminated equipment, one per type of sampling equipment, per day of sampling
Field Blank- No field blanks will be collected for this project

This page intentionally left blank.

4 References

Baker Environmental Inc. (Baker). 2001. *Final Field Investigation Report, Site 7 and AOC 2, Naval Weapons Station Yorktown Cheatham Annex, Williamsburg, Virginia.* March.

CH2M HILL. 2011a. *Final November 16, 2011 Partnering Meeting Minutes, CAX Partnering Team*. November.

CH2M HILL. 2011b. *Final Background Study Report, Naval Weapons Station Yorktown, Yorktown, Virginia and Cheatham Annex, Williamsburg, Virginia*. May.

CH2M HILL. 2012. *Draft Final Site Inspection Report, Areas of Concern 1, 2, 6, 7, and 8, Naval Weapons Station Yorktown, Yorktown, Virginia and Cheatham Annex, Williamsburg, Virginia*. January.

USEPA., 1993. *Region III Modifications to the Laboratory Data Validation Guidelines for Inorganic Data Review.* April

USEPA. 1994. *Region III Modifications to the National Functional Guidelines for Organic Data Review.* September.

USEPA. 2005. *Guidance for Uniform Federal Policy for Quality Assurance Project Plans*. March.

Virginia Institute of Marine Science (VIMS). Virginia Estuarine and Coastal Monitoring System (VECOS), Gloucester Point Continuous Monitoring Station. http://www3.vims.edu/vecos. Accessed 26 October 2012 for the period April through September 2012.

This page intentionally left blank.

Figures

VBO \\NORTHEND\PROJ\USNAVFACENGCOM\CHEATHAMANNEX\MAPFILES\388429_AOC8_SAMPLING\FIGURE 1 - WPNSTA BASE LOCATION MAP.MXD BHATHAWA 4/23/2012 2:44:09 PM

Legend

Site Boundary

Cheatham Annex Boundary

N
W E
S

0 1,000 2,000 Feet

Figure 1
Base Location Map
AOC 8 Remedial Investigation UFP-SAP
Cheatham Annex
Williamsburg, Virginia

CH2MHILL

DVR \\MNUSTRICTGFS01\PROJECTS\USNAVFACENGCOM405450\CHEATHAMANNEX\MAPFILES\388429_AOC8_UFPSAP\FIGURE 2 - AOC8 SITE MAP.MXD JCROCKETT 4/12/2013 1:36:01 PM

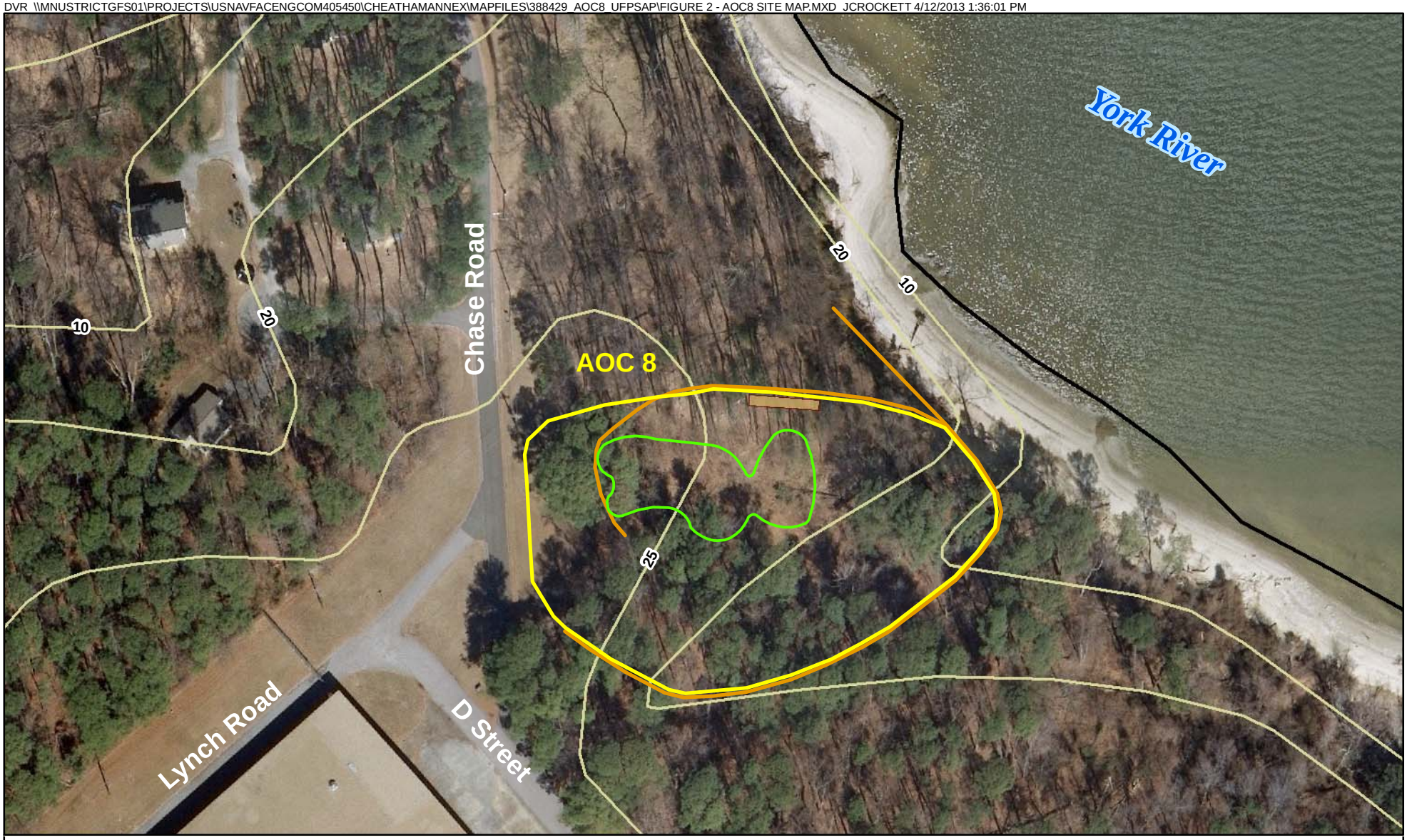

Legend

- Approximate AOC 8 Study Area
- CAX Boundary
- Observed Surficial Debris
- Approximate Location of Visible Debris within the Side Berm
- Approximate Location of Berm
- Topographic Surface Contour (feet above mean sea level)

N
W E
S

0 40 80
Feet

Figure 2
AOC 8 Site Map
AOC 8 Remedial Investigation UFP-SAP
Cheatham Annex
Williamsburg, Virginia

CH2MHILL

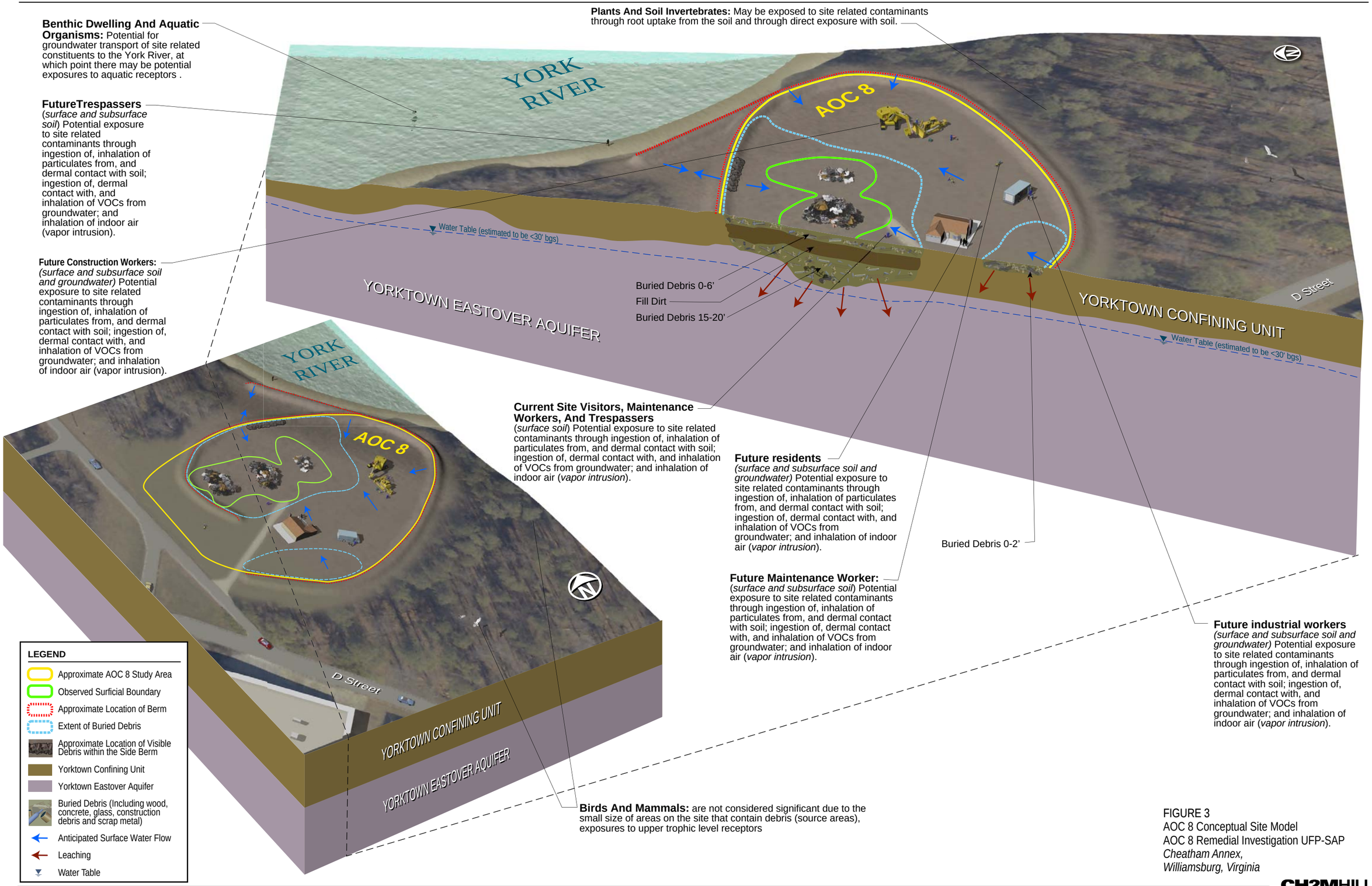

FIGURE 3
AOC 8 Conceptual Site Model
AOC 8 Remedial Investigation UFP-SAP
Cheatham Annex,
Williamsburg, Virginia

CH2MHILL.

ES033011003122VBO CSMCAXAOC_Fig3_CMS_Site_AOC8_rev7.ai 05/05/2013 LED

DVR \\MNUSTRICTGFS01\PROJECTS\USNAVFACENGCOM405450\CHEATHAMANNEX\MAPFILES\388429 AOC8 UFPSAP\FIGURE 4 - AOC8 SITE INSPECTION SAMPLING LCATIONS.MXD JCROCKETT 4/12/2013 1:36:37 PM

Legend

- Groundwater/Soil Sample Location
- Soil Sample Location
- Test Pits
- Approximate AOC 8 Study Area
- Observed Surficial Debris
- Approximate Location of Visible Debris within the Side Berm
- Approximate Location of Berm
- Topographic Surface Contour (feet above mean sea level)

N
W E
S

0 35 70
Feet

Figure 4
AOC 8 Site Inspection Sampling Locations
AOC 8 Remedial Investigation UFP-SAP
Cheatham Annex
Williamsburg, Virginia

CH2MHILL

DVR \\MNUSTRICTGFS01\PROJECTS\USNAVFACENGCOM405450\CHEATHAMANNEX\MAPFILES\388429_AOC8_UFPSAP\FIGURE 5 - EXTENT OF DEBRIS AND PROPOSED TEST PIT LOCS.MXD JCROCKETT 4/12/2013 1:36:55 PM

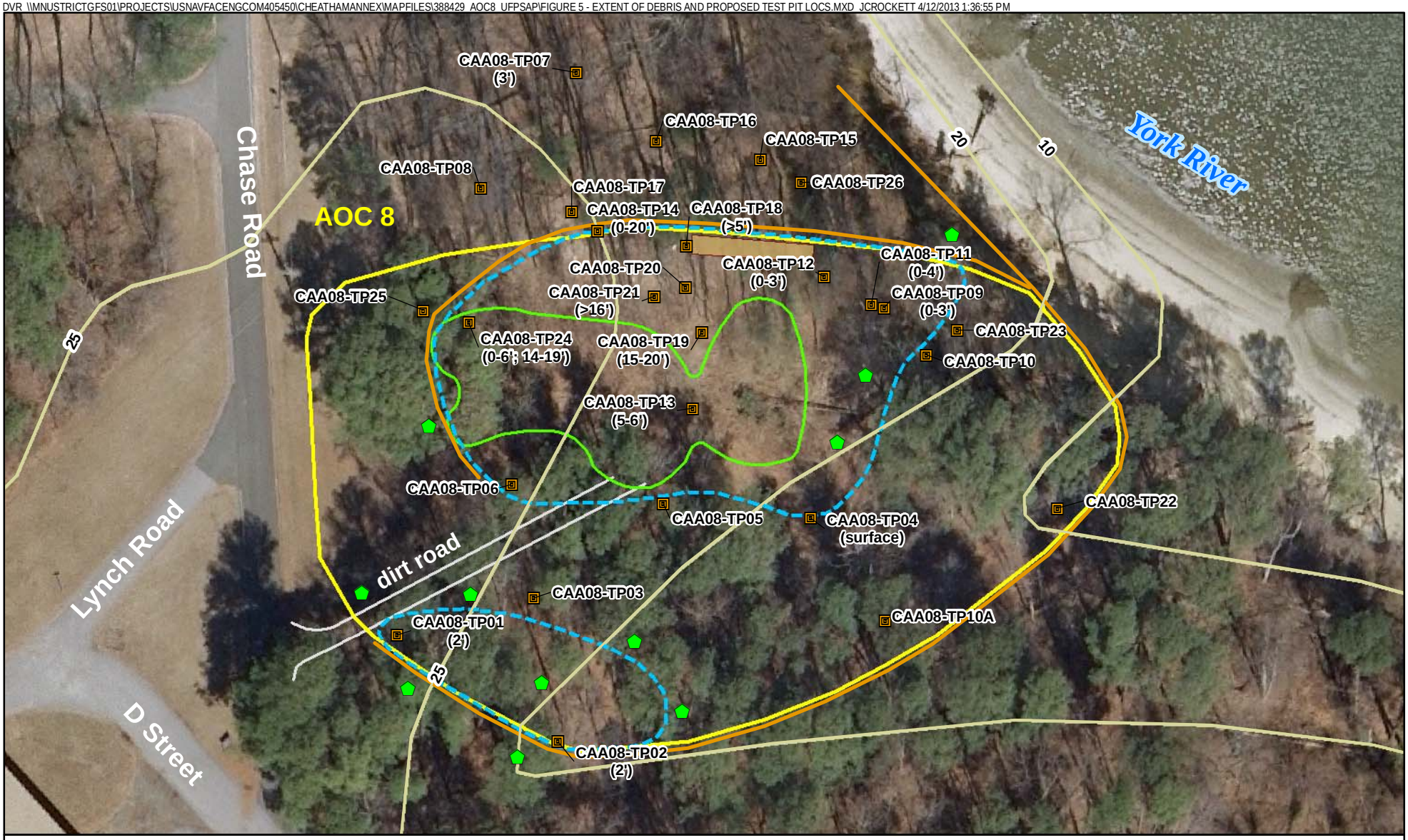

Legend

- Proposed Test Pit Location
- Test Pits (2008 SI)
- Approximate AOC 8 Study Area
- Observed Surficial Debris
- Extent of Buried Debris
- Approximate Location of Visible Debris within the Side Berm
- Topographic Surface Contour (feet above mean sea level)
- Approximate Location of Berm
- (0-6') Depth of Buried Debris

N
W E
S

0 30 60
Feet

Figure 5
AOC 8 Extent of Buried Debris and Proposed Test Pit Locations
AOC 8 Remedial Investigation UFP-SAP
Cheatham Annex
Williamsburg, Virginia

CH2MHILL

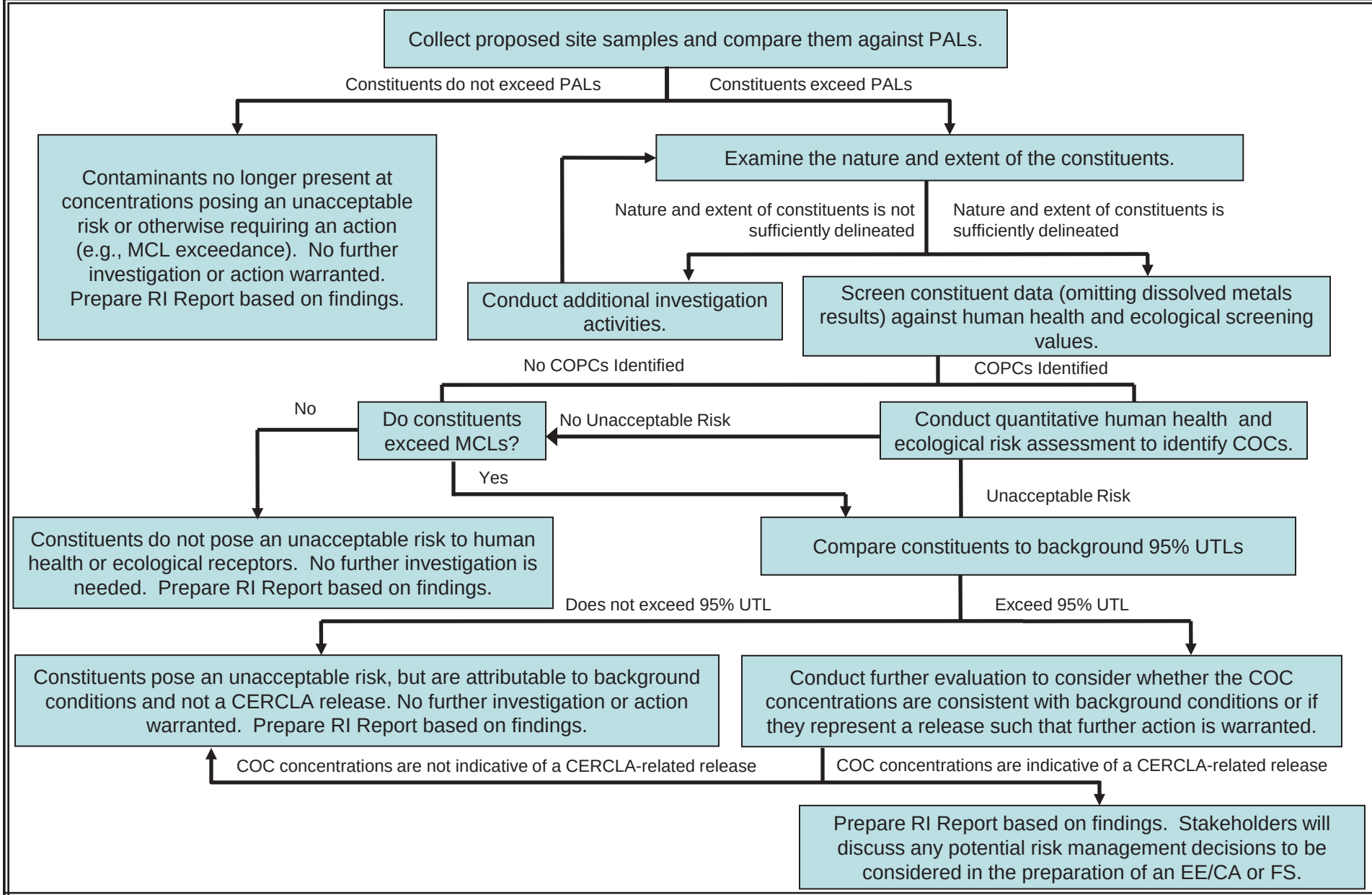

Figure 6
AOC 8 Decision Tree
Sampling and Analysis Plan
Cheatham Annex
Williamsburg, Virginia

DVR \\MNUSTRICTGFS01\PROJECTS\USNAVFACENGCOM405450\CHEATHAMANNEX\MAPFILES\388429_AOC8_UFPSAP\FIGURE 7 - PROPOSED SAMPLE LOCATIONS.MXD JCROCKETT 5/2/2013 7:53:54 AM

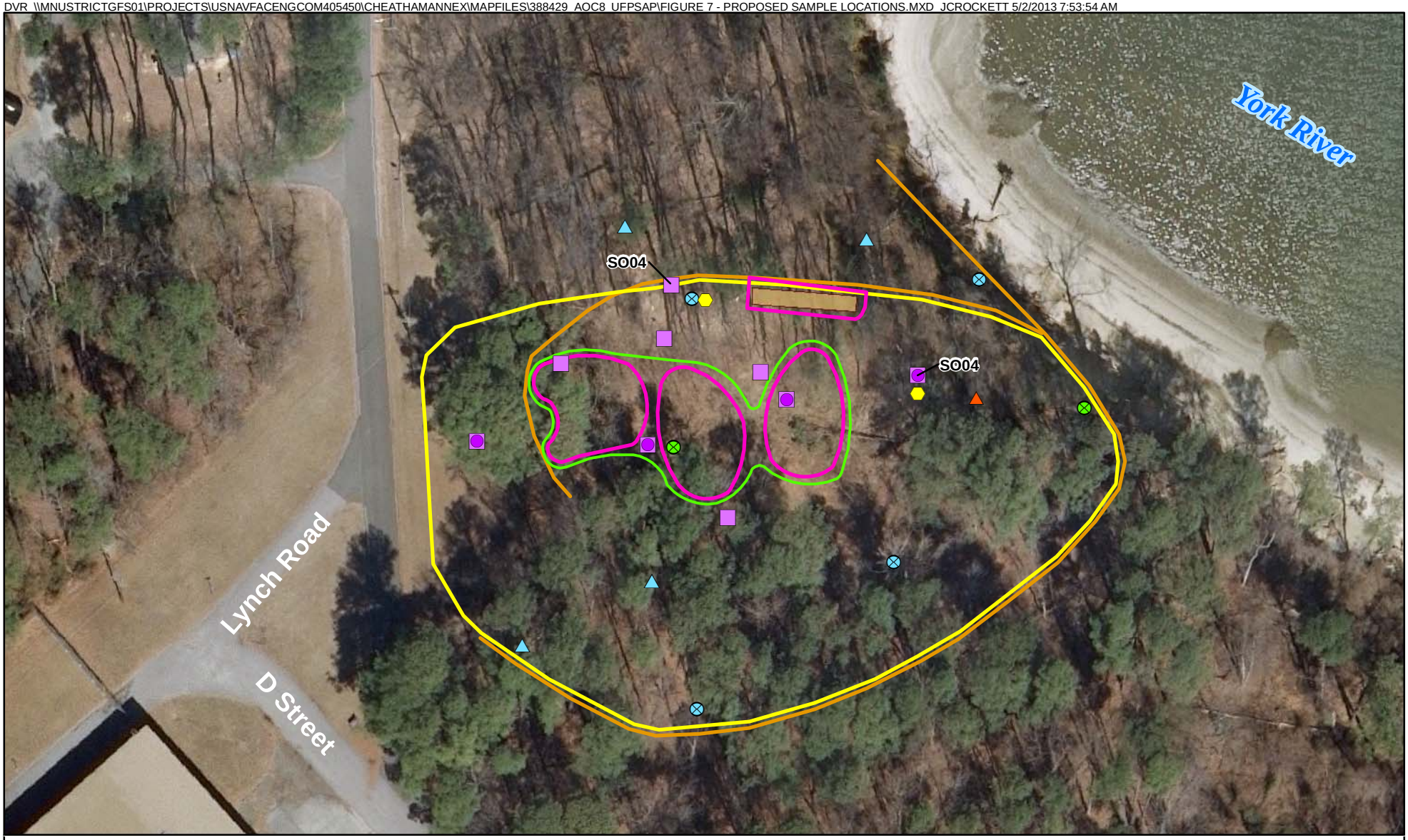

Legend

- Proposed Surface Soil Samples (for Hexavalent Chromium Analysis)
- Proposed Surface/Subsurface Soil Samples
- Proposed Surface/Subsurface Soil Sample From Site Low Lying Area
- Proposed Surface/Subsurface Soil Samples Co-Located with Groundwater Samples
- Proposed Groundwater Samples
- Groundwater/Soil Sample Location (2008 SI)
- Soil Sample Location (2008 SI)
- Approximate Location of Berm
- Approximate AOC 8 Study Area
- Observed Surficial Debris
- Approximate Location of Visible Debris within the Side Berm
- 5 Point Composite Sampling Areas

N W E S

0 35 70 Feet

Figure 7
Proposed Sample Locations
AOC 8 Remedial Investigation UFP-SAP RTCs
Cheatham Annex
Williamsburg, Virginia

CH2MHILL

Appendix A
Laboratory-Specific Information

A.1 Reference Limits and Evaluation Tables

Samples will be collected and analyzed for the analytical groups and methods detailed in **Section 3.3**, *Sample Details Table* (**Table 4**). The PALs and laboratory reporting limits for each analyte from these samples are provided in *Reference Limits and Evaluation Tables* (**Tables A-1a** through **A-1j**).

TABLE A-1a
Reference Limits and Evaluation Table
Matrix: Surface Soil, Subsurface Soil
Analytical Group: PAHs

		PALs[1,4]			Laboratory Limits (µg/kg)			LCS and MS/MSD Recovery Limits[5] (%)		
Analyte Name	**CAS No.**	**Adjusted Residential Soil RSL, Nov 2012 (µg/kg)**	**CAX Soil ESVs[2]**	**Project QL Goal[3,4] (µg/kg)**	**LOQ**	**Limit of Detection (LOD)**	**Detection Limit (DL)**	**Lower Criteria Limit (LCL)**	**UCL**	**RPD**
2-Methylnaphthalene	91-57-6	23,000	low molecular weight (LMW)	11500	35	25	18	45	105	30
Acenaphthene	83-32-9	340,000	LMW	170,000	35	25	15	45	110	
Acenaphthylene	208-96-8	340,000	LMW	170,000	35	25	18	45	105	
Anthracene	120-12-7	1,700,000	LMW	850,000	35	25	14	55	105	
Benzo(a)anthracene	56-55-3	150	high molecular weight (HMW)	75	35	25	14	50	110	
Benzo(a)pyrene	50-32-8	15	HMW	7.5	35	25	15	50	110	
Benzo(b)fluoranthene	205-99-2	150	HMW	75	35	25	17	45	115	
Benzo(g,h,i)perylene	191-24-2	170,000	HMW	85,000	35	25	15	40	125	
Benzo(k)fluoranthene	207-08-9	1,500	HMW	750	35	25	19	45	125	
Chrysene	218-01-9	15,000	HMW	7,500	35	25	12	55	110	
Dibenz(a,h)anthracene	53-70-3	15	HMW	7.5	35	25	16	40	125	
Fluoranthene	206-44-0	230,000	LMW	115,000	35	25	17	55	115	
Fluorene	86-73-7	230,000	LMW	115,000	35	25	17	50	110	
Indeno(1,2,3-cd)pyrene	193-39-5	150	HMW	75	35	25	15	40	120	
Naphthalene	91-20-3	3,600	LMW	1,800	35	25	18	40	105	
Phenanthrene	85-01-8	1,700,000	LMW	850,000	35	25	15	50	110	
Pyrene	129-00-0	170,000	HMW	85,000	35	25	16	45	125	

Notes:
[1] Refer to **Section 2.3.2** for a detailed discussion on the development of PALs, and refer to **Section 2.3.4** for specific identification of PALs by matrix.
[2] The ESV for the sum of all HMW PAHs is 18,000 µg/kg. The ESV for the sum of all LMW PAHs is 29,000 µg/kg.
[3] Project QL goals are equal to half of the minimum applicable PAL.
[4] PALs and Project QL Goals assume dry weight basis.
[5] DoD QSM v.4.1 is the basis for LCS and MS/MSD limits.
Shading indicates instances where the PAL is lower than the LOD. Non-detects will not be treated as exceedances, though they will be reported at a value greater than the PAL.

TABLE A-1b
Reference Limits and Evaluation Table
Matrix: Surface Soil, Subsurface Soil
Analytical Group: Pesticides

		PALs[1,3]			Laboratory Limits (µg/kg)			LCS and MS/MSD Recovery Limits[4] (%)		
Analyte Name	**CAS No.**	**Adjusted Residential Soil RSL, Nov 2012 (µg/kg)**	**CAX Soil ESVs**	**Project QL Goal[2,3] (µg/kg)**	**LOQ**	**LOD**	**DL**	**LCL**	**UCL**	**RPD**
4,4'-DDD	72-54-8	2000	583	291.5	1.7	1.0	0.48	30	135	
4,4'-DDE	72-55-9	1400	114	57	1.7	1.0	0.52	70	125	
4,4'-DDT	50-29-3	1700	100	50	1.7	1.0	0.66	45	140	
Aldrin	309-00-2	29	3.63	1.815	1.7	1.0	0.49	45	140	
alpha-BHC	319-84-6	77	226	38.5	1.7	1.0	0.56	60	125	
alpha-Chlordane	5103-71-9	1600	11	5.5	1.7	1.0	0.45	65	120	
beta-BHC	319-85-7	270	342	135	1.7	1.0	1.0	60	125	
delta-BHC	319-86-8	270	226	113	1.7	1.0	0.50	55	130	
Dieldrin	60-57-1	30	10.5	5.25	1.7	1.0	0.45	65	125	
Endosulfan I	959-98-8	37000	6.32	3.16	1.7	1.0	0.39	15	135	
Endosulfan II	33213-65-9	37000	6.32	3.16	1.7	1.0	0.48	35	140	30
Endosulfan sulfate	1031-07-8	37000	6.32	3.16	1.7	1.0	0.49	60	135	
Endrin	72-20-8	1800	1.95	0.975	1.7	1.0	0.74	60	135	
Endrin aldehyde	7421-93-4	1800	1.95	0.975	1.7	1.0	0.83	35	145	
Endrin ketone	53494-70-5	1800	1.95	0.975	1.7	1.0	0.45	65	135	
gamma-BHC (Lindane)	58-89-9	520	7.75	3.875	1.7	1.0	0.50	60	125	
gamma-Chlordane	5103-74-2	1600	11	5.5	1.7	1.0	0.45	60	125	
Heptachlor	76-44-8	110	52.9	26.45	1.7	1.0	0.62	50	140	
Heptachlor epoxide	1024-57-3	53	52.9	26.45	1.7	1.0	0.48	65	130	
Methoxychlor	72-43-5	31000	500	250	1.7	1.0	0.86	55	145	
Toxaphene	8001-35-2	440	500	220	33	20	10	**60**	**140**	

Notes:
[1] Refer to **Section 2.3.2** for a detailed discussion on the development of PALs, and refer to **Section 2.3.4** for specific identification of PALs by matrix.
[2] Project QL goals are equal to half of the minimum applicable PAL.
[3] PALs and Project QL Goals assume dry weight basis.
[4] DoD QSM v.4.1 is the basis for LCS and MS/MSD limits: values are bolded to indicate instances where in-house limits are used.

TABLE A-1c
Reference Limits and Evaluation Table

Matrix: Surface Soil, Subsurface Soil

Analytical Group: PCBs

Analyte Name	CAS No.	PALs[1,3]		Project QL Goal[2,3] (µg/kg)	Laboratory Limits (µg/kg)			LCS and MS/MSD Recovery Limits[4] (%)		
		Adjusted Residential Soil RSL, Nov 2012 (µg/kg)	CAX Soil ESVs (µg/kg)		LOQ	LOD	DL	LCL	UCL	RPD
Aroclor-1016	12674-11-2	390	8,000	195	40	20	14	40	140	30
Aroclor-1221	11104-28-2	140	8,000	70	40	20	14	**29**	**185**	
Aroclor-1232	11141-16-5	140	8,000	70	40	20	13	**29**	**185**	
Aroclor-1242	53469-21-9	220	8,000	110	40	20	10	**29**	**185**	
Aroclor-1248	12672-29-6	220	8,000	110	40	20	5.7	**29**	**185**	
Aroclor-1254	11097-69-1	110	8,000	55	40	20	15	**29**	**185**	
Aroclor-1260	11096-82-5	220	8,000	110	40	20	11	60	130	

Notes:

[1] Refer to **Section 2.3.2** for a detailed discussion on the development of PALs, and refer to **Section 2.3.4** for specific identification of PALs by matrix.

[2] Project QL goals are equal to half of the minimum applicable PAL.

[3] PALs and Project QL Goals assume dry weight basis.

[4] DoD QSM v.4.1 is the basis for LCS and MS/MSD limits: values are bolded to indicate instances where in-house limits are used.

TABLE A-1d

Reference Limits and Evaluation Table

Matrix: Surface Soil, Subsurface Soil

Analytical Group: Inorganic Constituents (including mercury and hexavalent chromium)

Analyte Name	CAS No.	Analytical Method	PALs[1,4]				Project QL Goal[3,4] (mg/kg)	Laboratory Limits (mg/kg)			LCS and MS/MSD Recovery Limits[5] (%)		
			Adjusted Residential Soil RSL, Nov 2012 (mg/kg)	CAX Soil ESVs (mg/kg)	CAX SS Background[2] (mg/kg)	CAX SB Background[2] (mg/kg)		LOQ	LOD	DL	LCL	UCL	RPD
Aluminum	7429-90-5		7,700	pH < 5.5	12,200	13,000	3,850	20.0	10.0	3.20			
Antimony	7440-36-0		3.1	78	11	No Criterion (NC)	1.55	2.00	1.00	0.340			
Arsenic	7440-38-2		0.39	18	6.36	5.54	0.195	2.00	1.00	0.206			
Barium	7440-39-3		1,500	330	52.9	84.5	26.45	0.500	0.250	0.00990			
Beryllium	7440-41-7		16	40	0.587	0.52	0.26	0.0500	0.0250	0.00434			
Cadmium	7440-43-9		7	32	1.5	NC	0.75	0.100	0.0500	0.0160			
Calcium	7440-70-2		NC	NC	2,290	2,380	1,145	25.0	12.5	1.40			
Chromium	7440-47-3		0.29	64	18.2	33.7	0.145	0.500	0.250	0.0380			
Cobalt	7440-48-4		2.3	13	9.93	5.18	1.15	0.500	0.250	0.0190			
Copper	7440-50-8		310	70	4.25	3.17	1.585	0.500	0.250	0.0650			
Iron	7439-89-6	SW-846 6010C	5,500	5 < pH > 8	19,900	32,000	2750	5.00	2.50	1.60	80	120	
Lead	7439-92-1		400	120	17.4	8.79	4.395	2.00	1.00	0.0800			
Magnesium	7439-95-4		NC	NC	1,070	1,120	535	25.0	12.5	2.52			20
Manganese	7439-96-5		180	220	324	176	88	1.00	0.500	0.0250			
Nickel	7440-02-0		150	38	9.52	17.6	4.76	0.500	0.250	0.0270			
Potassium	7440-09-7		NC	NC	708	901	354	50.0	25.0	6.10			
Selenium	7782-49-2		39	0.52	0.51	0.64	0.255	2.00	1.00	0.330			
Silver	7440-22-4		39	560	2.1	1.1	0.55	0.500	0.250	0.0580			
Sodium	7440-23-5		NC	NC	521	811	260.5	25.0	12.5	3.40			
Thallium	7440-28-0		0.078	1	NC	NC	0.039	2.00	1.00	0.300			
Vanadium	7440-62-2		39	130	27.9	48.3	13.95	1.00	0.500	0.0510			
Zinc	7440-66-6		2,300	120	26.5	28	13.25	1.00	0.500	0.150			
Chromium VI (Hexavalent)	18540-29-9	SW-846 7199	0.29	0.4	NC	NC	0.145	0.4	0.2	0.106	**LCS 80 MS 75**	**LCS 120 MS 125**	
Mercury	7439-97-6	SW-846 7471A	2.3	0.1	0.111	0.14	0.05	0.0480	0.0240	0.00540	80	120	

Notes:

[1] Refer to **Section 2.3.2** for a detailed discussion on the development of PALs, and refer to **Section 2.3.4** for specific identification of PALs by matrix. Background values are provided for reference only.

[2] Background values are not action limits, however, they are presented here for reference.

[3] Project QL goals are equal to half of the minimum applicable PAL.

[4] PALs and Project QL Goals assume dry weight basis.

[5] DoD QSM v.4.1 is the basis for LCS and MS/MSD limits: values are bolded to indicate instances where in-house limits are used.

Shading indicates instances where the PAL is lower than the LOD. Non-detects will not be treated as exceedances, though they will be reported at a value greater than the PAL.

TABLE A-1e
Reference Limits and Evaluation Table

Matrix: Surface Soil, Subsurface Soil

Analytical Group: Wet Chemistry

Analyte Name	CAS No.	Analytical Method	Project Indicator Level[1]	Units	Laboratory Limits			LCS and MS/MSD Recovery Limits[2] (%)		
					LOQ	LOD	DL	LCL	UCL	RPD
pH	PH	SW-846 9045D	5<pH<9	pH	1	1	1	**99**	**101**	NA
TOC	TOC	Walkley-Black	2,000	mg/kg	500	500	500	**50**	**150**	**25**

Notes:

[1] Project Indicator Limits (PILs) were developed to assist in determining site conditions:
- Data for pH in soil will be used as the ecological screening value for certain metals (aluminum and iron).
- TOC results will be used to determine the bioavailability of organic chemicals.

[2] DoD QSM v.4.1 is the basis for LCS and MS/MSD limits: values are bolded to indicate instances where in-house limits are used.

TABLE A-1f
Reference Limits and Evaluation Table

Matrix: Surface Soil

Analytical Group: Grain-size[1]

Analyte Name	CAS No.	Units
GS03 Sieve 3 inches (75 mm)	SIEVE75.0	% Passing
GS05 Sieve 2inches(50 mm)	SIEVE50.0	% Passing
GS06 Sieve 1.5 inches (37.5 mm)	SIEVE37.5	% Passing
GS07 Sieve 1 inch (25 mm)	SIEVE25.0	% Passing
GS08 Sieve 0.75" (19 mm)	SIEVE19.0	% Passing
GS10 Sieve 0.375 inch (9.5 mm)	SIEVE9.5	% Passing
Sieve No. 004 (4.75 mm)	SIEVE4.75	% Passing
Sieve No. 010 (2.00 mm)	SIEVE2.0	% Passing
Sieve No. 020 (850 micrometers [µm])	SIEVE850	% Passing
Sieve No. 040 (425 µm)	SIEVE425	% Passing
Sieve No. 060 (250 µm)	SIEVE250	% Passing
Sieve No. 080 (180 µm)	SIEVE180	% Passing
Sieve No. 100 (150 µm)	SIEVE150	% Passing
Sieve No. 200 (75 µm)	SIEVE75	% Passing
Gravel (%)	GRAVEL	%
Sand (%)	14808-60-7	%
Coarse Sand (%)	COARSESAND	%
Medium Sand (%)	MEDIUMSAND	%
Fine Sand (%)	FINESAND	%
Fines (%)	FINES	%

Notes:

There are no PALs or laboratory limits for grain-size analysis.

[1] Grain-size data will be used to characterize sediment and soil conditions in terms of habitat for certain invertebrates, and to compare site to reference habitat conditions.

TABLE A-1g
Reference Limits and Evaluation Table

Matrix: Groundwater

Analytical Group: VOCs

Analyte Name	CAS No.	PALs[1]				Project QL Goal[3] (µg/L)	Laboratory Limits (µg/L)			LCS and MS/MSD Recovery Limits[4] (%)		
		Adjusted Tap water RSL, Nov 2012 Micrograms per Liter (µg/L)	MCL (µg/L)	Surface Water ESV[2] (µg/L)	BTAG ESV[2] (µg/L)		LOQ	LOD	DL	LCL	UCL	RPD
1,1,1-Trichloroethane	71-55-6	750	200	312	312	100	2.0	1.0	0.80	65	130	30
1,1,2,2-Tetrachloroethane	79-34-5	0.066	NC	90.2	90.2	0.033	2.0	1.0	0.54	65	130	
1,1,2-Trichloro-1,2,2-trifluoroethane (Freon-113)	76-13-1	5,300	NC	NC	NC	2,650	2.0	1.0	0.73	**47**	**173**	
1,1,2-Trichloroethane	79-00-5	0.041	5	550	550	0.0205	2.0	1.0	0.76	75	125	
1,1-Dichloroethane	75-34-3	2.4	NC	NC	47.0	1.2	2.0	1.0	0.62	70	135	
1,1-Dichloroethene	75-35-4	26	7	2,240	2,240	3.5	2.0	1.0	0.94	70	130	
1,2,4-Trichlorobenzene	120-82-1	0.39	70	5.40	5.40	0.195	2.0	1.0	0.70	65	135	
1,2-Dibromo-3-chloropropane	96-12-8	0.00032	0.2	NC	NC	0.00016	10	5.0	0.96	50	130	
1,2-Dibromoethane	106-93-4	0.0065	0.05	NC	NC	0.00325	2.0	1.0	0.78	82	120	
1,2-Dichlorobenzene	95-50-1	28	600	42.0	42.0	14	2.0	1.0	0.73	70	120	
1,2-Dichloroethane	107-06-2	0.15	5	1,130	1,130	0.075	2.0	1.0	0.63	70	130	
1,2-Dichloropropane	78-87-5	0.38	5	2,400	2,400	0.19	2.0	1.0	0.80	75	125	
1,3-Dichlorobenzene	541-73-1	NC	NC	28.5	28.5	14.25	2.0	1.0	0.77	75	125	
1,4-Dichlorobenzene	106-46-7	0.42	75	19.9	19.9	0.21	2.0	1.0	0.76	75	125	
2-Butanone	78-93-3	490	NC	NC	14,000	245	25	12	4.5	30	150	
2-Hexanone	591-78-6	3.4	NC	NC	99.0	1.7	5.0	2.5	1.4	55	130	
4-Methyl-2-pentanone	108-10-1	100	NC	123,000	123,000	50	5.0	2.5	0.79	60	135	
Acetone	67-64-1	1,200	NC	564,000	564,000	600	25	12	1.8	40	140	
Benzene	71-43-2	0.39	5	110	110	0.195	2.0	1.0	0.71	80	120	
Bromodichloromethane	75-27-4	0.12	80	NC	NC	0.06	2.0	1.0	0.52	75	120	
Bromoform	75-25-2	7.9	80	640	640	3.95	2.0	1.0	0.75	70	130	
Bromomethane	74-83-9	0.7	NC	120	120	0.35	2.0	1.0	0.95	30	145	
Carbon disulfide	75-15-0	72	NC	NC	0.92	0.46	10	5.0	2.6	35	160	
Carbon tetrachloride	56-23-5	0.39	5	1,500	1,500	0.195	2.0	1.0	0.94	65	140	
Chlorobenzene	108-90-7	7.2	100	25.0	25.0	3.6	2.0	1.0	0.72	80	120	
Chloroethane	75-00-3	2,100	NC	NC	NC	1,050	2.0	1.0	0.98	60	135	
Chloroform	67-66-3	0.19	80	815	815	0.095	2.0	1.0	0.80	65	135	

TABLE A-1g (continued)

Reference Limits and Evaluation Table

Matrix: Groundwater

Analytical Group: VOCs

Analyte Name	CAS No.	PALs[1]				Project QL Goal[3] (µg/L)	Laboratory Limits (µg/L)			LCS and MS/MSD Recovery Limits[4] (%)		
		Adjusted Tap water RSL, Nov 2012 Micrograms per Liter (µg/L)	MCL (µg/L)	Surface Water ESV[2] (µg/L)	BTAG ESV[2] (µg/L)		LOQ	LOD	DL	LCL	UCL	RPD
Chloromethane	74-87-3	19	NC	2,700	2,700	9.5	2.0	1.0	0.82	40	125	
cis-1,2-Dichloroethene	156-59-2	2.8	70	680	680	1.4	2.0	1.0	0.53	70	125	
cis-1,3-Dichloropropene	10061-01-5	0.41	NC	7.90	7.90	0.205	2.0	1.0	0.59	70	130	
Cyclohexane	110-82-7	1,300	NC	NC	NC	650	2.0	1.0	0.93	**45**	**147**	
Dibromochloromethane	124-48-1	0.15	80	NC	NC	0.075	2.0	1.0	0.44	60	135	
Dichlorodifluoromethane (Freon-12)	75-71-8	19	NC	NC	NC	9.5	2.0	1.0	0.74	30	155	
Ethylbenzene	100-41-4	1.3	700	25.0	25.0	0.65	2.0	1.0	0.69	75	125	
Isopropylbenzene	98-82-8	39	NC	NC	2.60	1.3	2.0	1.0	0.67	**75**	**125**	
Methyl acetate	79-20-9	1,600	NC	NC	NC	800	2.0	1.0	0.95	24	129	
Methylcyclohexane	108-87-2	NC	NC	NC	NC	Lab LOD	2.0	1.0	0.64	**55**	**121**	
Methylene chloride	75-09-2	8.4	5	2,560	2,560	2.5	10	5.0	0.71	55	140	
Methyl-tert-butyl ether (MTBE)	1634-04-4	12	NC	5,000	11,070	6	2.0	1.0	0.60	65	125	
Styrene	100-42-5	110	100	910	910	50	2.0	1.0	0.61	65	135	
PCE	127-18-4	3.5	5	45.0	45.0	1.7	2.0	1.0	0.76	45	150	
Toluene	108-88-3	86	1,000	215	215	43	2.0	1.0	0.72	75	120	
trans-1,2-Dichloroethene	156-60-5	8.6	100	680	680	4.3	2.0	1.0	0.73	60	140	
trans-1,3-Dichloropropene	10061-02-6	0.41	NC	7.90	7.90	0.205	2.0	1.0	0.73	55	140	
Trichloroethene	79-01-6	0.26	5	1,940	1,940	0.13	2.0	1.0	0.89	70	125	
Trichlorofluoromethane (Freon-11)	75-69-4	110	NC	NC	NC	55	2.0	1.0	0.94	60	145	
Vinyl chloride	75-01-4	0.015	2	NC	930	0.0075	2.0	1.0	0.71	50	145	
Xylene (total)	1330-20-7	19	10,000	19.0	19.0	9.5	4.0	2.0	1.3	**70**	**130**	

Notes:

[1] Refer to **Section 2.3.2** for a detailed discussion on the development of PALs, and refer to **Section 2.3.4** for specific identification of PALs by matrix.

[2] The Surface water and BTAG ESVs are for marine water with the exception of those values underlined. Underlined values are freshwater ESVs.

[3] Project QL goals are equal to half of the minimum applicable PAL.

[4] DoD QSM v.4.1 is the basis for LCS and MS/MSD limits: values are bolded to indicate instances where in-house limits are used.

Shading indicates instances where the PAL is lower than the LOD. Non-detects will not be treated as exceedances, though they will be reported at a value greater than the PAL.

TABLE A-1h
Reference Limits and Evaluation Table
Matrix: Groundwater

Analytical Group: Total Inorganic Constituents including mercury

Analyte Name	CAS No.	Analytical Method	PALs[1]				Project QL Goal[3] (µg/L)	Laboratory Limits (µg/L)			LCS and MS/MSD Recovery Limits[4] (%)		
			Adjusted Tap water RSL, Nov 2012 (µg/L)	MCL (µg/L)	Surface Water ESV[2] (µg/L)	BTAG ESV[2] (µg/L)		LOQ	LOD	DL	LCL	UCL	RPD
Aluminum	7429-90-5	SW-846 6020A	1,600	NC	NC	87.0	43.5	50.0	25.0	6.80	80	120	20
Antimony	7440-36-0		0.6	6	500	500	0.3	2.00	0.440	0.110			
Arsenic	7440-38-2		0.045	10	36.0	12.5	0.0225	20.0	10.0	0.610			
Barium	7440-39-3		290	2,000	200	4.00	2	10.0	8.00	2.00			
Beryllium	7440-41-7		1.6	4	100	0.66	0.33	0.740	0.370	0.0940			
Cadmium	7440-43-9		0.69	5	8.84	0.12	0.06	8.00	4.00	0.110			
Calcium	7440-70-2		NC	NC	NC	NC	Lab LOD	2400	1200	36.0			
Chromium	7440-47-3		0.031	100	50.4	57.5	0.0155	6.00	3.00	0.450			
Cobalt	7440-48-4		0.47	NC	NC	23.0	0.235	1.00	0.840	0.210			
Copper	7440-50-8		62	1,300	3.73	NC	1.865	1.00	0.880	0.220			
Iron	7439-89-6		1,100	NC	NC	300	150	30.0	15.0	3.80			
Lead	7439-92-1		15	15	8.52	NC	4.26	1.20	0.600	0.160			
Magnesium	7439-95-4		NC	NC	NC	NC	Lab LOD	240	120	30.0			
Manganese	7439-96-5		32	NC	100	120	16	2.56	1.28	0.320			
Nickel	7440-02-0		30	NC	8.28	NC	4.14	2.40	1.20	0.320			
Potassium	7440-09-7		NC	NC	NC	NC	Lab LOD	3500	1750	48.0			
Selenium	7782-49-2		7.8	50	71.1	NC	3.9	5.20	2.60	0.650			
Silver	7440-22-4		7.1	NC	0.23	0.23	0.115	0.232	0.116	0.0290			
Sodium	7440-23-5		NC	NC	NC	NC	Lab LOD	240	120	32.0			
Thallium	7440-28-0		0.016	2	21.3	21.3	0.008	0.460	0.230	0.0580			
Vanadium	7440-62-2		7.8	NC	50.0	20.0	3.9	1.00	0.800	0.200			
Zinc	7440-66-6		470	NC	85.6	NC	42.8	12.8	6.40	1.60			
Mercury	7439-97-6	SW-846 7470A	0.43	2	1.11	0.016	0.008	0.200	0.0690	0.0230	80	120	

Notes:

[1] Refer to **Section 2.3.2** for a detailed discussion on the development of PALs, and refer to **Section 2.3.4** for specific identification of PALs by matrix.

[2] The Surface water and BTAG ESVs are for marine water with the exception of those values underlined. Underlined values are freshwater ESVs.

[3] Project QL goals are equal to half of the minimum applicable PAL.

[4] DoD QSM v.4.1 is the basis for LCS and MS/MSD limits: values are bolded to indicate instances where in-house limits are used.

Shading indicates instances where the PAL is lower than the LOD. Non-detects will not be treated as exceedances, though they will be reported at a value greater than the PAL.

TABLE A-1i
Reference Limits and Evaluation Table

Matrix: Groundwater

Analytical Group: Dissolved Inorganic Constituents including mercury

Analyte Name	CAS No.	Analytical Method	PALs[1]				Project QL Goal[3] (µg/L)	Laboratory Limits (µg/L)			LCS and MS/MSD Recovery Limits[4] (%)		
			Adjusted Tap water RSL, Nov 2012 (µg/L)	MCL (µg/L)	Surface Water ESV[2] (µg/L)	BTAG ESV[2] (µg/L)		LOQ	LOD	DL	LCL	UCL	RPD
Aluminum	7429-90-5	SW-846 6020A	1,600	NC	NC	NC	800	50.0	25.0	6.80	80	120	20
Antimony	7440-36-0		0.6	6	500	NC	0.3	2.00	0.440	0.110			
Arsenic	7440-38-2		0.045	10	36.0	NC	0.0225	20.0	10.0	0.610			
Barium	7440-39-3		290	2,000	200	NC	100	10.0	8.00	2.00			
Beryllium	7440-41-7		1.6	4	100	NC	0.8	0.740	0.370	0.0940			
Cadmium	7440-43-9		0.69	5	8.80	NC	0.345	8.00	4.00	0.110			
Calcium	7440-70-2		NC	NC	NC	NC	Lab LOD	2400	1200	36.0			
Chromium	7440-47-3		0.031	100	50.0	NC	0.0155	6.00	3.00	0.450			
Cobalt	7440-48-4		0.47	NC	NC	NC	0.235	1.00	0.840	0.210			
Copper	7440-50-8		62	1,300	3.10	3.10	1.55	1.00	0.880	0.220			
Iron	7439-89-6		1,100	NC	NC	NC	550	30.0	15.0	3.80			
Lead	7439-92-1		15	15	8.10	8.10	4.05	1.20	0.600	0.160			
Magnesium	7439-95-4		NC	NC	NC	NC	Lab LOD	240	120	30.0			
Manganese	7439-96-5		32	NC	100	NC	16	2.56	1.28	0.320			
Nickel	7440-02-0		30	NC	8.20	8.20	4.1	2.40	1.20	0.320			
Potassium	7440-09-7		NC	NC	NC	NC	Lab LOD	3500	1750	48.0			
Selenium	7782-49-2		7.8	50	71.0	71.0	3.9	5.20	2.60	0.650			
Silver	7440-22-4		7.1	NC	0.23	NC	0.115	0.232	0.116	0.0290			
Sodium	7440-23-5		NC	NC	NC	NC	Lab LOD	240	120	32.0			
Thallium	7440-28-0		0.016	2	21.3	NC	0.008	0.460	0.230	0.0580			
Vanadium	7440-62-2		7.8	NC	50.0	NC	3.9	1.00	0.800	0.200			
Zinc	7440-66-6		470	NC	81.0	81.0	40.5	12.8	6.40	1.60			
Mercury	7439-97-6	SW-846 7470A	0.43	2	0.94	NC	0.215	0.200	0.0690	0.0230			

Notes:
[1] Refer to **Section 2.3.2** for a detailed discussion on the development of PALs, and refer to **Section 2.3.4** for specific identification of PALs by matrix.
[2] The Surface water and BTAG ESVs are for marine water.
[3] Project QL goals are equal to half of the minimum applicable PAL.
[4] DoD QSM v.4.1 is the basis for LCS and MS/MSD limits: values are bolded to indicate instances where in-house limits are used.
Shading indicates instances where the PAL is lower than the LOD. Non-detects will not be treated as exceedances, though they will be reported at a value greater than the PAL.

TABLE A-1j
Reference Limits and Evaluation Table

Matrix: Groundwater

Analytical Group: Wet Chemistry (NAIPs)

Analyte Name	CAS No.	Analytical Method	Project Indicator Level[1]	Laboratory Limits (µg/L)			LCS and MS/MSD Percent Range (%R) Limits[2]		
				LOQ	LOD	DL	LCL	UCL	RPD
Alkalinity	471-34-1	USEPA 310.2	>50,000	2,000	2,000	2,000	**90**	**110**	**10**
Ethane	74-84-0	RSK-175	>500	2	1.96	1	**75**	**123**	**14**
Ethene	74-85-1	RSK-175	>500	3	2.71	2.3	**72**	**131**	**12**
Methane	74-82-8	RSK-175	>500	1	0.964	0.72	**74**	**120**	**18**
Chloride	16887-00-6	SW-846 9056	NA	TBD	TBD	TBD	**90**	**110**	**10**
Nitrate	14797-55-8	SW-846 9056	TBD	1,000	210	52	**90**	**110**	**15**
Nitrite	14797-65-0	SW-846 9056	TBD	100	44	11	**90**	**110**	**10**
Sulfate	14808-79-8	SW-846 9056	<20,000	5,000	260	55	**90**	**110**	**10**
Sulfide	18496-25-8	SM 4500-S2-F (18th Ed)	>1,000	1,000	1,000	450	**86**	**105**	**10**

Notes:

[1] PILs were developed to assist in determining if evidence exists for natural attenuation processes.
- Alkalinity is the measurement of the available buffering capacity against pH change, which can affect the rate of degradation of COCs.
- Ethane and ethene are the ultimate daughter products of chlorinated ethanes and ethenes. These parameters are an indicator of the extent of complete dechlorination.
- Elevated methane concentrations can be an indication of highly reducing conditions.
- Chloride is a general water quality parameter and is produced by anaerobic dechlorination. Elevated levels of chloride may indicate that dechlorination is occurring.
- Nitrate and nitrite data will be collected in the event that a natural attenuation or enhanced biological remedy is later needed for the site.
- Sulfate and sulfate in elevated concentrations may compete with the reductive dechlorination pathway.

[2] DoD QSM v.4.1 is the basis for LCS and MS/MSD limits: values are bolded to indicate instances where in-house limits are used.

A.2 Analytical SOP References Table

Information regarding the laboratory SOPs and to be used for the handling and analysis of samples is provided in Analytical SOP References Tables, **Tables A2-a** through **A2-c.**

TABLE A-2a
Analytical SOP References Table

Laboratory Name and Address: ENCO Laboratories, 10775 Central Port Drive, Orlando, FL 32824

Point of Contact: Ronnie Wambles

Phone Number: (407) 826-5314

Lab SOP Number	Title, Revision Date, and Number	Date reviewed if not revised	Definitive or Screening Data	Matrix and Analytical Group	Instrument	Variance to QSM	Modified for Project Work? (Y/N)
LOGINS-03	Receiving Samples (Rev. 11, 07/31/2012)	NA	NA	NA	NA	None	N
ADMIN-14	WASTE DISPOSAL AND CHARACTERIZATION (Rev. 6, 09/16/2011)	06/29/2012	NA	NA	NA	None	N
EXSV-27	Extraction of Samples Using Separatory Funnel Techniques (Rev. 5, 09/15/2011)	08/17/2012	NA	Aqueous SVOC Prep	NA	None	N
EXSV-16	Extraction of Soil/Solid Samples Using Sonication, (Rev. 7, 03/16/2012)	02/25/2013	NA	Soils SVOC Prep	NA	None	N
MET-15	METALS ANALYSIS USING INDUCTIVELY COUPLED PLASMA-MASS SPECTROMETRY (ICP-MS) (Revision 5, 02/14/2011)	01/31/2013	Definitive	Soil, Aqueous Metals	ICP-MS	ENCO does not perform Methods of Standard Addition	N
MET-16	Mercury in Soils by Digestion/Cold Vapor Atomic Absorption (CVAA) (Rev. 5, 03/12/2012)	03/14/2013	Definitive	Soil/Mercury	CVAA		N
MET-03	Mercury in Waters by Digestion/CVAA (Rev. 5, 02/20/2012)	03/14/2013	Definitive	Water/Mercury	CVAA		N
SVGCMS-03	Analysis of SVOCs by Gas Chromatography/Mass Spectrometry (GC/MS) (Rev. 17, 08/15/2011)	03/11/2013	Definitive	Soil, Aqueous SVOC	GC/MS	None	N
VGCMS-05	Analysis of VOCs by GC/MS (Rev.17, 08/26/2011)	07/25/2012	Definitive	Soil, Aqueous VOC	GC/MS	None	N
SVGC-04	Organochlorine Pesticides by GC/ECD (Rev. 10, 9/21/2011)	2/1/2013	Definitive	Soil, Aqueous Pesticides	GC	None	N
SVGC-07	PCBs by Gas Chromatography/Electron Capture Detection (GC/ECD) (Rev. 5, 03/22/2012)	02/25/2013	Definitive	Soil, Aqueous PCBs	GC	QC samples are spiked only with Aroclors 1016 & 1260	N

TABLE A-2a (continued)

Analytical SOP References Table

Laboratory Name and Address: ENCO Laboratories, 10775 Central Port Drive, Orlando, FL 32824

Point of Contact: Ronnie Wambles

Phone Number: (407) 826-5314

Lab SOP Number	Title, Revision Date, and Number	Date reviewed if not revised	Definitive or Screening Data	Matrix and Analytical Group	Instrument	Variance to QSM	Modified for Project Work? (Y/N)
MET-05	Metals Analysis by Inductively Coupled Plasma-Atomic Emission Spectroscopy (ICP-AES) (Rev. 11, 01/01/2013)	NA	Definitive	Soil, Aqueous Metals	ICP-AES	ENCO does not perform Methods of Standard Addition	N
EXMT-07	Acid Digestion of Aqueous Samples & Extracts for Analysis by ICP OR ICP-MS (Rev. 8, 08/10/2012)	NA	NA	Aqueous Metals Prep	NA	None	N
EXMT-09	Acid Digestion of Soil and Waste Samples for Analysis by ICP and ICP-MS (Rev. 7, 08/03/2012)	NA	NA	Soil Metals Prep	NA	None	N
WETS-47	Alkalinity (Methyl Orange-Automated) (Rev. 2, 6/21/2011)	06/21/2012	Screening	Aqueous NAIPs	NA	None	N
WETS-56	pH (Electrometric, Solid/Waste Samples) (Rev. 3, 2/3/2010)	03/15/2013	Screening	Soils pH	pH Meter	None	N
WETS-92	Ion Chromatography (IC) (Rev. 3, 04/05/2012)	NA	Screening	Water/Ions	IC	None	N
WETS-61	Sulfide (Titrimetric Iodine) (Rev. 7, 04/05/2013)	NA	Screening	Water/Sulfide	NA	None	N
WETS-90	TOC in Soil Using Walkley Black Titration (Rev. 1, 01/12/2010)	03/15/2013	Screening	Solid/TOC	Buret	None	N
VCG-11	Analysis of Dissolved Gases by Headspace Gas Chromatograph/Thermal Conductivity Detector (TCD)/Flame Ionization Detector (FID) (Rev. 5, 06/24/2011)	08/14/2012	Definitive	RSK-175	GC	None	N

Notes:

Required Laboratory Accreditation: DoD ELAP

Expiration Date: for ENCO-Orlando: 3/31/2014

Expiration Date for ENCO-Jacksonville: 4/30/2014

Copies of laboratory certification are included in **Appendix D.**

TABLE A-2b
Analytical SOP References Table

Laboratory Name and Address: ALS-Rochester 1565 Jefferson Road, Building 300, Suite 360, Rochester, NY 14623

Point of Contact: Debbie Patton

Phone Number: (585) 672-7473

Lab SOP Number	Title, Revision Date, and Number	Date reviewed if not revised	Definitive or Screening Data	Matrix and Analytical Group	Instrument	Variance to QSM	Modified for Project Work? (Y/N)
GEN-7199	Hexavalent Chromium by Ion Chromatography, Revision 5, 6/4/2012	NA	Definitive	water/soil	IC	None	N

Required Laboratory Accreditation: DoD ELAP

Expiration Date: Issue Date: 4/7/2012 Note that the DoD ELAP accreditor Perry Johnson Laboratory Accreditation, Inc. no longer notes expiration dates on the letters they issue, but indicates that laboratories are due for evaluation within 2 years of issuing a new certificate.

Copies of laboratory certification are included in **Appendix D.**

TABLE A-2c
Analytical SOP References Table

Laboratory Name and Address: Kemron, 1359 Ellsworth Industrial Blvd, Atlanta, GA 30318

Point of Contact: Tommy Jordan

Phone Number: (404) 516-3172

Lab SOP Number	Title, Revision Date, and Number	Date reviewed if not revised	Definitive or Screening Data	Matrix and Analytical Group	Instrument	Variance to QSM	Modified for Project Work? (Y/N)
AG-SOP-014B	Particle Size Analysis of soils w/o Hydrometer, Rev 0, May 2010	6/1/11	NA	NA	Std Seive Nest	None	No

Required Laboratory Accreditation: None for grain-size analysis

A.3 Laboratory QC Samples Table

Laboratories analyzing samples in support of this work will perform laboratory QC samples at the frequency required by the DoD QSM v. 4.1. Details regarding each laboratory QC sample are provided in *Laboratory QC Samples Tables*, **Tables A-3a** through **A-3n**.

TABLE A-3a
Laboratory QC Samples Table

Matrix: Groundwater

Analytical Group: VOCs

Analytical Method/SOP Reference: SW-846 8260B / VGCMS-05

QC Sample:	Frequency/ Number	Method/SOP QC Acceptance Limits	CA	Person(s) Responsible for CA	DQI	MPC
Method blank	One per preparatory batch	No target analytes > 1/2 LOQ; no common laboratory contaminants > LOQ.	Correct problem. If required, re-prep and reanalyze method blank and all samples processed with the contaminated blank.	Analyst	Bias/Contamination	Same as Method/SOP QC Acceptance Limits.
LCS		Refer to *Reference Limits and Evaluation Table,* **Table A-1g**	LCS is reanalyzed. If still fails, samples are re-prepped if sample remains.		Precision and Accuracy/Bias	
MS		Same as LCS.	In the absence of client-specific requirements, flag the data.		Precision and Accuracy/Bias	
MSD		Same as LCS and RPD ≤30%.	In the absence of client-specific requirements, flag the data.		Precision and Accuracy/Bias	
Internal Standards (IS)	Spiked in Every Sample	Retention time within 30 seconds from retention time of the midpoint standard in the initial calibration (ICAL); areas within -50% to +100% of ICAL midpoint standard.	Inspect mass spectrometer and gas chromatograph for malfunctions; mandatory reanalysis of samples analyzed while system was malfunctioning.		Precision and Accuracy	
Surrogates		Dibromofluoromethane 85-115%, Toluene-d_8 85-120%, 1,2-Dichloroethane-d4 70-120%, 4-Bromofluorobenzene 75-120%	Re-prep and reanalyze sample unless objective evidence of suspected or confirmed sample matrix effects are available. If insufficient sample exists for reanalysis, client will be contacted for instructions. In the absence of client instruction, data will be qualified.		Precision and Accuracy/Bias	

TABLE A-3b
Laboratory QC Samples Table

Matrix: Surface Soil, Subsurface Soil

Analytical Group: PAHs

Analytical Method/SOP Reference: SW-846 8270D / SVGCMS-03

QC Sample:	Frequency / Number	Method/SOP QC Acceptance Limits	CA	Person(s) Responsible for CA	DQI	MPC
Method Blank	One per preparatory batch	No target analytes > 1/2 LOQ	Correct problem. If required, re-prep and reanalyze method blank and all samples processed with the contaminated blank.	Analyst	Bias/ Contamination	Same as Method/SOP QC Acceptance Limits.
LCS		See *Reference Limits and Evaluation Table*, **Table A-1a**.	LCS is reanalyzed. If still fails, samples are re-prepped if sample remains.		Precision and Accuracy/Bias	
MS		Same as LCS.	In absence of client-specific requirements, flag the data.		Precision and Accuracy/Bias	
MSD		Same as LCS and RPD ≤30%.	In absence of client-specific requirements, flag the data.		Precision and Accuracy/Bias	
Surrogate Spike	Spiked in every sample	Terphenyl-d_{14} 70-130%	Re-prep and reanalyze sample unless objective evidence of suspected or confirmed sample matrix effects are available. If insufficient sample exists for reanalysis, client will be contacted for instructions. In absence of client instruction, data will be qualified.		Precision and Accuracy/Bias	
IS		Retention time within 30 seconds from retention time of the midpoint standard in the ICAL; areas within -50% to +100% of ICAL midpoint standard.	Inspect mass spectrometer and gas chromatograph for malfunctions; mandatory re-analysis of samples analyzed while system was malfunctioning.		Precision and Accuracy	

TABLE A-3C
Laboratory QC Samples Table

Matrix: Surface Soil, Subsurface Soil

Analytical Group: Pesticides

Analytical Method/SOP Reference: SW-846 8081B / SVGC-04

QC Sample:	Frequency/Number	Method/SOP QC Acceptance Limits	CA	Person(s) Responsible for CA	DQI	MPC
Method Blank	One per preparatory batch of similar matrix	No analytes detected > 1/2 LOQ, > 1/10 amount measured in any sample, or regulatory limit (whichever is greater).	Correct problem. If required, re-prep and re-analyze method blank and all samples processed with the contaminated blank.	Analyst/Supervisor	Bias/ Contamination	Same as Method/SOP QC Acceptance Limits.
LCS		See *Reference Limits and Evaluation Table*, **Table A-1b**.	Correct problem, then re-prep and re-analyze the LCS and all samples in the associated preparatory batch for failed analytes.		Precision and Accuracy/Bias	
MS		Same as LCS.	In absence of client specific requirements, flag the data.		Precision and Accuracy/Bias	
MSD		Same as LCS and RPD ≤30%.	In absence of client-specific requirements, flag the data.		Precision and Accuracy/Bias	
Surrogates	Spiked in every sample.	TCMX, 70-125%R; Decachlorobiphenyl, 55-130%R	For QC and field samples, correct problem then re-prep and re-analyze all failed samples for failed surrogates in the associated preparatory batch.		Precision and Accuracy/Bias	
Internal Standards (IS)		RT within 30 seconds of ICAL reference standard; %R = 50 - 200% of ICAL reference standard.	In absence of matrix interference evidence, re-analyze the sample.		Precision and Accuracy	

TABLE A-3d
Laboratory QC Samples Table

Matrix: Surface Soil, Subsurface Soil

Analytical Group: PCBs

Analytical Method/SOP Reference: SW-846 8082A / SVGC-07

QC Sample:	Frequency/Number	Method/SOP QC Acceptance Limits	CA	Person(s) Responsible for CA	DQI	MPC
Method Blank	One per preparatory batch.	No analytes detected > 1/2 LOQ, > 1/10 amount measured in any sample, or regulatory limit (whichever is greater).	Correct problem. If required, re-prep and reanalyze method blank and all samples processed with the contaminated blank.	Analyst	Bias/ Contamination	Same as Method/SOP QC Acceptance Limits.
LCS		See *Reference Limits and Evaluation Table*, **Table A-1c**.	LCS is reanalyzed. If still fails, samples are re-prepped if sample remains.		Precision and Accuracy/Bias	
MS		Same as LCS.	In absence of client-specific requirements, flag the data.		Precision and Accuracy/Bias	
MSD		Same as LCS and RPD ≤30%.	In absence of client-specific requirements, flag the data.		Precision and Accuracy/Bias	
Surrogates	Spiked in every sample.	Decachlorobiphenyl 60 - 125%, *2,4,5,6-TCMX 20-137%*.[1]	For QC and field samples, correct problem then re-prep and reanalyze all failed samples for failed surrogates in the associated preparatory batch.		Precision and Accuracy/Bias	

[1] Italicized limits are in-house, DoD QSM v. 4.1 does not specify limits for this surrogate.

TABLE A-3e
Laboratory QC Samples Table

Matrix: Surface Soil, Subsurface Soil

Analytical Group: Inorganic Constituents (all except mercury and hexavalent chromium)

Analytical Method/SOP Reference: SW-846 6010C / MET-05

QC Sample:	Frequency/Number	Method/SOP QC Acceptance Limits	CA	Person(s) Responsible for CA	DQI	MPC
Method Blank	One per preparatory batch.	No analytes detected > 1/2 <LOQ. Blank result must not otherwise affect sample results.	Correct problem; then repeat. If the method blank still fails, redigest and analyze all affected samples.	Analyst	Bias/ Contamination	Same as Method/SOP QC Acceptance Limits.
LCS		See *Reference Limits and Evaluation Table*, **Table A-1d**.	LCS is reanalyzed. If still fails, samples are re-prepped if sample remains..		Precision and Accuracy/Bias	
MS		Same as LCS.	If MS falls outside of QC acceptance limits, additional QC tests are required to evaluate matrix effects (dilution test, PS).		Precision and Accuracy/Bias	
MSD		Same as LCS and RPD ≤ 20%.			Precision and Accuracy/Bias	
Dilution Test		Recovery within ±10% of true value.	Perform Post Spike (PS)		Precision and Accuracy/Bias	
PS	One is performed when dilution test fails or analyte concentration for all samples < 50x LOD.	Recovery within ± 25% of true value.	If dilution test recoveries are outside of QC acceptance limits but PS meets QC acceptance criteria, and matrix effects are not confirmed, re-prep and reanalyze sample.		Precision and Accuracy/Bias	
Interference check solutions (ICSs)	After beginning of the analytical run	ICS-A: Absolute value of concentration for all non-spiked analytes < LOD. ICS-AB: Within 20% of true value	Terminate analysis, locate and correct problem, reanalyze ICS, reanalyze all samples.		Precision and Accuracy/Bias	

TABLE A-3f
Laboratory QC Samples Table

Matrix: Groundwater

Analytical Group: Total and Dissolved Inorganic Constituents (except mercury)

Analytical Method/SOP Reference: SW-846 6020A / MET-15

QC Sample:	Frequency/Number	Method/SOP QC Acceptance Limits	CA	Person(s) Responsible for CA	DQI	MPC
Method Blank	One per preparatory batch.	No target analytes > 1/2 LOQ.	Correct problem; then repeat. If the method blank still fails, redigest and analyze all affected samples.	Analyst	Bias/Contamination	Same as Method/SOP QC Acceptance Limits.
LCS		See *Reference Limits and Evaluation Table*, **Table A-1h and -1i**.	LCS is reanalyzed. If still fails, samples are re-prepped if sample remains.		Precision and Accuracy/Bias	
MS		Same as LCS.	Perform a dilution test and/or PS to evaluate matrix effects.		Precision and Accuracy/Bias	
MSD		Same as LCS and RPD ≤ 20%.	Perform a dilution test and/or PS to evaluate matrix effects.		Precision and Accuracy/Bias	
Dilution Test		Recovery within ±10% of true value.	Perform PS.		Precision and Accuracy/Bias	
PS	When dilution test fails or analyte concentration for all samples < 50x LOD.	Recovery within ±25% of true value.	If dilution test recovers outside of QC acceptance limits but PS meets QC acceptance criteria, matrix effects are not confirmed, re-prep and reanalyze sample.		Precision and Accuracy/Bias	
IS	Spiked in every sample.	IS intensity within 30-120% of intensity of IS in ICAL.	Reanalyze sample at 5X dilution with the addition of appropriate amounts of IS		Precision and Accuracy	

TABLE A-3g
Laboratory QC Samples Table

Matrix: Surface Soil, Subsurface Soil, Groundwater

Analytical Group: Inorganic Constituents (mercury)

Analytical Method/SOP Reference: SW-846 7471B, 7400A / MET-16, MET-03

QC Sample:	Frequency/Number	Method/SOP QC Acceptance Limits	CA	Person(s) Responsible for CA	DQI	MPC
Method Blank	One per preparatory batch	No analytes detected > 1/2 <LOQ. Blank result must not otherwise affect sample results.	Correct problem; then repeat. If the method blank still fails, re-prep and reanalyze all samples processed with contaminated blank.	Analyst	Bias/Contamination	Same as Method/SOP QC Acceptance Limits.
LCS		See *Reference Limits and Evaluation Table*, **Table A-1d, -1h and -1i**.	LCS is reanalyzed. If still fails, samples are re-prepped if sample remains.		Precision and Accuracy/Bias	
MS		Same as LCS.	Examine the project-specific data quality objectives (DQOs). In absence of project-specific instruction, flag the data.		Precision and Accuracy/Bias	
MSD		Same as LCS and RPD ≤ 20%.	Examine the project-specific DQOs. Contact the client as to additional measures to be taken.		Precision and Accuracy/Bias	

TABLE A-3h
Laboratory QC Samples Table

Matrix: Surface Soil, Subsurface Soil,

Analytical Group: Inorganic Constituents (Hexavalent Chromium)

Analytical Method/SOP Reference: SW-846 7199 / GEN-7199

QC Sample:	Frequency/Number	Method/SOP QC Acceptance Limits	CA	Person(s) Responsible for CA	DQI	MPC
Method Blank	1 per batch of 20 or fewer samples.	No target compounds should be >1/2 LOQ.	Re-clean, reanalyze and/or qualify the data.	Analyst/Supervisor	Bias/Contamination	Same as Method/SOP QC Acceptance Limits.
LCS-insoluble		See *Reference Limits and Evaluation Table*, **Table A-1d.**	Redigest if possible. If samples are out of holding time, redigest and report both sets of data. If insufficient sample is available to redigest, flag. If the LCS recoveries are high and the sample results are <LOQ, narrate.		Accuracy/Bias	
LCS-insoluble					Accuracy/Bias	
MS-soluble		75-125% of the true value.	Redigest entire batch unless spike is diluted out (sample result > 4x spike concentration). If redigest fails, contact client about possible matrix investigations. If samples are out of holding time, redigest and report both sets of data. If insufficient sample is available to redigest, flag. Flag results associated with out of control MS.		Accuracy/ Bias	
MS-insoluble						
Duplicate (or MSD)		If parent concentration is >4x the LOQ, RPD<20%; if the parent concentration is <4x the LOQ, duplicate is acceptable if the difference is not > +/- LOQ.	Re-prep and reanalyze sample and duplicate unless obvious or historical interferences or lack of volume.		Precision	
Post-Digestion MS		85-115% of the true value.	If MS also failed, no action beyond CA for MS.		Bias	

TABLE A-3i
Laboratory QC Samples Table

Matrix: Surface Soil

Analytical Group: TOC

Analytical Method/SOP Reference: Walkley Black/WETS-090

QC Sample:	Frequency/Number	Method/SOP QC Acceptance Limits	CA	Person(s) Responsible for CA	DQI	MPC
Method Blank	One per Batch	MDL/MRL	There are no CAs for the method blank.	Analyst	Cleanliness	Same as Method/SOP QC Acceptance Limits.
LCS		See *Reference Limits and Evaluation Table,* **Table A-1e.**	The LCS is reanalyzed to confirm the contamination, which if confirmed, requires re-analysis of all associated samples.		Precision and Accuracy	
MS/MSD		Same as LCS and RPD ≤ 25%.	Non-conforming results must be flagged with Laboratory Information Management System (LIMS) qualifier QM-07 ("The spike recovery was outside acceptance limits for the MS and/or MSD. The batch was accepted based on acceptable LCS recovery.")		Precision and Accuracy	
			Non-conforming results must be flagged with the LIMS qualifier QM-11 ("Precision between duplicate MSs of the same sample was outside acceptance limits.")		Precision and Accuracy	

TABLE A-3j
Laboratory QC Samples Table

Matrix: Surface Soil, Subsurface Soil

Analytical Group: pH

Analytical Method/SOP Reference: SW-846 9045D/WETS-56

QC Sample:	Frequency/Number	Method/SOP QC Acceptance Limits	CA	Person(s) Responsible for CA	DQI	MPC
LCS	One per Batch	See *Reference Limits and Evaluation Table,* **Table A-1e.**	The LCS is reanalyzed to confirm the contamination, which if confirmed, requires re-analysis of all associated samples.	Analyst	Precision and Accuracy	Same as Method/SOP QC Acceptance Limits.
Duplicate		RPD ≤ 25%.	If precision between duplicate samples is outside of the acceptance limits, the sample and its duplicate must be reanalyzed		Precision and Accuracy	

TABLE A-3k
Laboratory QC Samples Table

Matrix: Groundwater

Analytical Group: Wet Chemistry (methane, ethane, ethene)

Analytical Method/SOP Reference: RSK-175 / VGC-11

QC Sample:	Frequency/Number	Method/SOP QC Acceptance Limits	CA	Person(s) Responsible for CA	DQI	MPC
Method Blank	One per preparatory batch	No target analytes > 1/2 LOQ; no common laboratory contaminants > LOQ	Correct problem; then repeat. If the method blank still fails; repeat ICAL.	Analyst	Bias/ contamination	Same as Method/SOP QC Acceptance Limits.
LCS		See *Reference Limits and Evaluation Table,* **Table A-1j.**	LCS is reanalyzed. If still fails, samples are re-prepped if sample remains.		Precision and Accuracy/Bias	
MS/MSD		Same as LCS and RPD ≤ 30%.	In the absence of client-specific requirements, flag the data.		Precision and Accuracy/Bias	

TABLE A-3I
Laboratory QC Samples Table

Matrix: Groundwater

Analytical Group: Wet Chemistry (Alkalinity)

Analytical Method/SOP Reference: EPA 310.2 / WETS-047

QC Sample:	Frequency/Number	Method/SOP QC Acceptance Limits	CA	Person(s) Responsible for CA	DQI	MPC
Method Blank	One per preparatory batch.	No target analytes > 1/2 LOQ.	Correct problem; then repeat. If the method blank still fails; repeat ICAL.	Analyst	Bias/ contamination	Same as Method/SOP QC Acceptance Limits.
LCS		See *Reference Limits and Evaluation Table,* **Table A-1j.**	LCS is reanalyzed. If still fails, samples are re-prepped if sample remains.		Precision and Accuracy/Bias	
MS and MSD		Same as LCS; RPD ≤ 10%.	In the absence of client-specific requirements, flag the data.		Precision and Accuracy/Bias	

TABLE A-3m
Laboratory QC Samples Table

Matrix: Groundwater

Analytical Group: Wet Chemistry (Chloride, Nitrate, Nitrite, Sulfate)

Analytical Method/SOP Reference: SW-846 9056/WETS-057

QC Sample:	Frequency/Number	Method/SOP QC Acceptance Limits	CA	Person(s) Responsible for CA	DQI	MPC
Method Blank	One per preparatory batch.	No target analytes > 1/2 LOQ.	Correct problem; then repeat. If the method blank still fails; repeat ICAL.	Analyst	Bias/ contamination	Same as Method/SOP QC Acceptance Limits.
LCS containing all analytes to be reported		See *Reference Limits and Evaluation Table,* **Table A-1j.**	LCS is reanalyzed. If still fails, samples are re-prepped if sample remains.		Precision and Accuracy/Bias	
MS/MSD		Same as LCS; RPD ≤ 15%.	In the absence of client-specific requirements, flag the data.		Precision and Accuracy/Bias	
Sample Duplicate	One per every 10 samples.	%D 10% (between sample and sample duplicate).	Correct problem and reanalyze sample and duplicate.		Precision	

TABLE A-3n
Laboratory QC Samples Table

Matrix: Groundwater

Analytical Group: Wet Chemistry (Sulfide)

Analytical Method/SOP Reference: 18 SM 4500-S-E/WETS-061

QC Sample:	Frequency/Number	Method/SOP QC Acceptance Limits	CA	Person(s) Responsible for CA	DQI	MPC
Method Blank	One per preparatory blank	No target analytes > 1/2 LOQ.	Correct problem; then repeat. If the method blank still fails; repeat ICAL.	Analyst	Bias/ contamination	Same as Method/SOP QC Acceptance Limits.
LCS		See *Reference Limits and Evaluation Table,* **TableA-1j.**	LCS is reanalyzed. If still fails, samples are re-prepped if sample remains.		Precision and Accuracy/Bias	
MS/ MSD		Same as LCS; RPD ≤ 10%.	In the absence of client-specific requirements, flag the data.		Precision and Accuracy/Bias	

This page intentionally left blank.

Appendix B
Site Inspection Exceedance Figures

Appendix B
Site Inspection Exceedance Figures

VBO \\NORTHEND\PROJ\USNAVFACENGCOM\CHEATHAMANNEX\MAPFILES\AOC SI REPORT\2011\FIGURE7-5_AOC8_SS_RESULTS.MXD MUNWIN 6/22/2011 4:37:17 PM

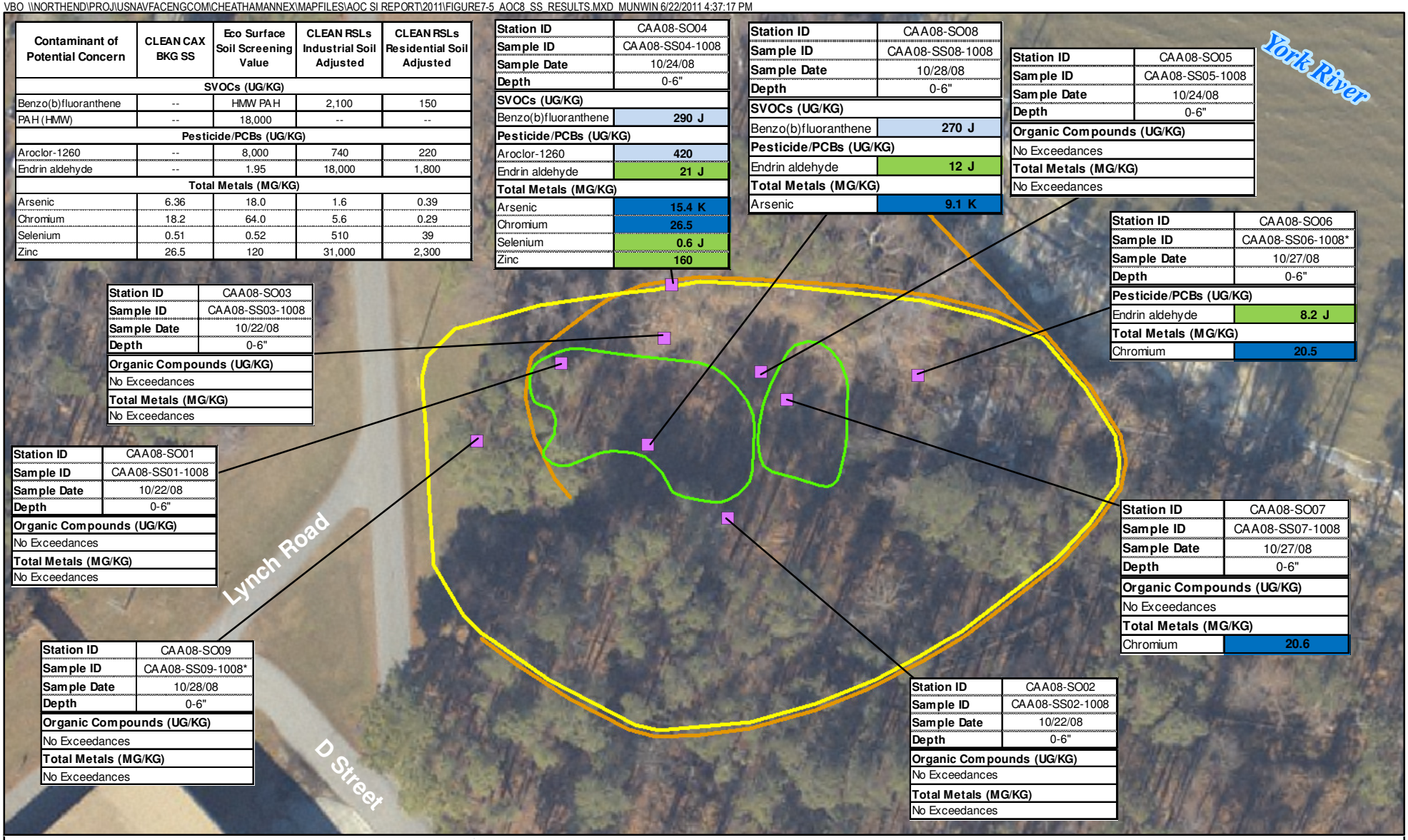

Contaminant of Potential Concern	CLEAN CAX BKG SS	Eco Surface Soil Screening Value	CLEAN RSLs Industrial Soil Adjusted	CLEAN RSLs Residential Soil Adjusted
SVOCs (UG/KG)				
Benzo(b)fluoranthene	--	HMW PAH	2,100	150
PAH (HMW)	--	18,000	--	--
Pesticide/PCBs (UG/KG)				
Aroclor-1260	--	8,000	740	220
Endrin aldehyde	--	1.95	18,000	1,800
Total Metals (MG/KG)				
Arsenic	6.36	18.0	1.6	0.39
Chromium	18.2	64.0	5.6	0.29
Selenium	0.51	0.52	510	39
Zinc	26.5	120	31,000	2,300

Station ID	CAA08-SO04
Sample ID	CAA08-SS04-1008
Sample Date	10/24/08
Depth	0-6"
SVOCs (UG/KG)	
Benzo(b)fluoranthene	290 J
Pesticide/PCBs (UG/KG)	
Aroclor-1260	420
Endrin aldehyde	21 J
Total Metals (MG/KG)	
Arsenic	15.4 K
Chromium	26.5
Selenium	0.6 J
Zinc	160

Station ID	CAA08-SO08
Sample ID	CAA08-SS08-1008
Sample Date	10/28/08
Depth	0-6"
SVOCs (UG/KG)	
Benzo(b)fluoranthene	270 J
Pesticide/PCBs (UG/KG)	
Endrin aldehyde	12 J
Total Metals (MG/KG)	
Arsenic	9.1 K

Station ID	CAA08-SO05
Sample ID	CAA08-SS05-1008
Sample Date	10/24/08
Depth	0-6"
Organic Compounds (UG/KG)	
No Exceedances	
Total Metals (MG/KG)	
No Exceedances	

Station ID	CAA08-SO06
Sample ID	CAA08-SS06-1008*
Sample Date	10/27/08
Depth	0-6"
Pesticide/PCBs (UG/KG)	
Endrin aldehyde	8.2 J
Total Metals (MG/KG)	
Chromium	20.5

Station ID	CAA08-SO03
Sample ID	CAA08-SS03-1008
Sample Date	10/22/08
Depth	0-6"
Organic Compounds (UG/KG)	
No Exceedances	
Total Metals (MG/KG)	
No Exceedances	

Station ID	CAA08-SO01
Sample ID	CAA08-SS01-1008
Sample Date	10/22/08
Depth	0-6"
Organic Compounds (UG/KG)	
No Exceedances	
Total Metals (MG/KG)	
No Exceedances	

Station ID	CAA08-SO07
Sample ID	CAA08-SS07-1008
Sample Date	10/27/08
Depth	0-6"
Organic Compounds (UG/KG)	
No Exceedances	
Total Metals (MG/KG)	
Chromium	20.6

Station ID	CAA08-SO09
Sample ID	CAA08-SS09-1008*
Sample Date	10/28/08
Depth	0-6"
Organic Compounds (UG/KG)	
No Exceedances	
Total Metals (MG/KG)	
No Exceedances	

Station ID	CAA08-SO02
Sample ID	CAA08-SS02-1008
Sample Date	10/22/08
Depth	0-6"
Organic Compounds (UG/KG)	
No Exceedances	
Total Metals (MG/KG)	
No Exceedances	

Legend

- Soil Sample Location
- Approximate AOC 8 Study Area
- Observed Surficial Debris
- Approximate Location of Berm

Notes:

- Exceeds BKG & ECO
- Exceeds BKG & Res RSL
- Exceeds BKG, Res & Ind RSL

* Indicates duplicate sample was collected at this location.
Values presented are the higher of the two.
-- - No value available
J - Analyte present, value may or may not be accurate or precise
K - Analyte present, value may be biased high, actual value may be lower
MG/KG - Milligrams per kilogram
UG/KG - Micrograms per kilogram

N W E S

0 35 70 Feet

Figure 7-5
AOC 8 Surface Soil Exceedance Results
Site Inspection Report
Areas of Concern 1, 2, 6, 7, and 8
Cheatham Annex
Williamsburg, Virginia

CH2MHILL

VBO \\NORTHEND\PROJ\USNAVFACENGCOM\CHEATHAMANNEX\MAPFILES\AOC SI REPORT\2011\FIGURE7-6_AOC8_SB_RESULTS.MXD MUNWIN 6/23/2011 11:47:09 AM

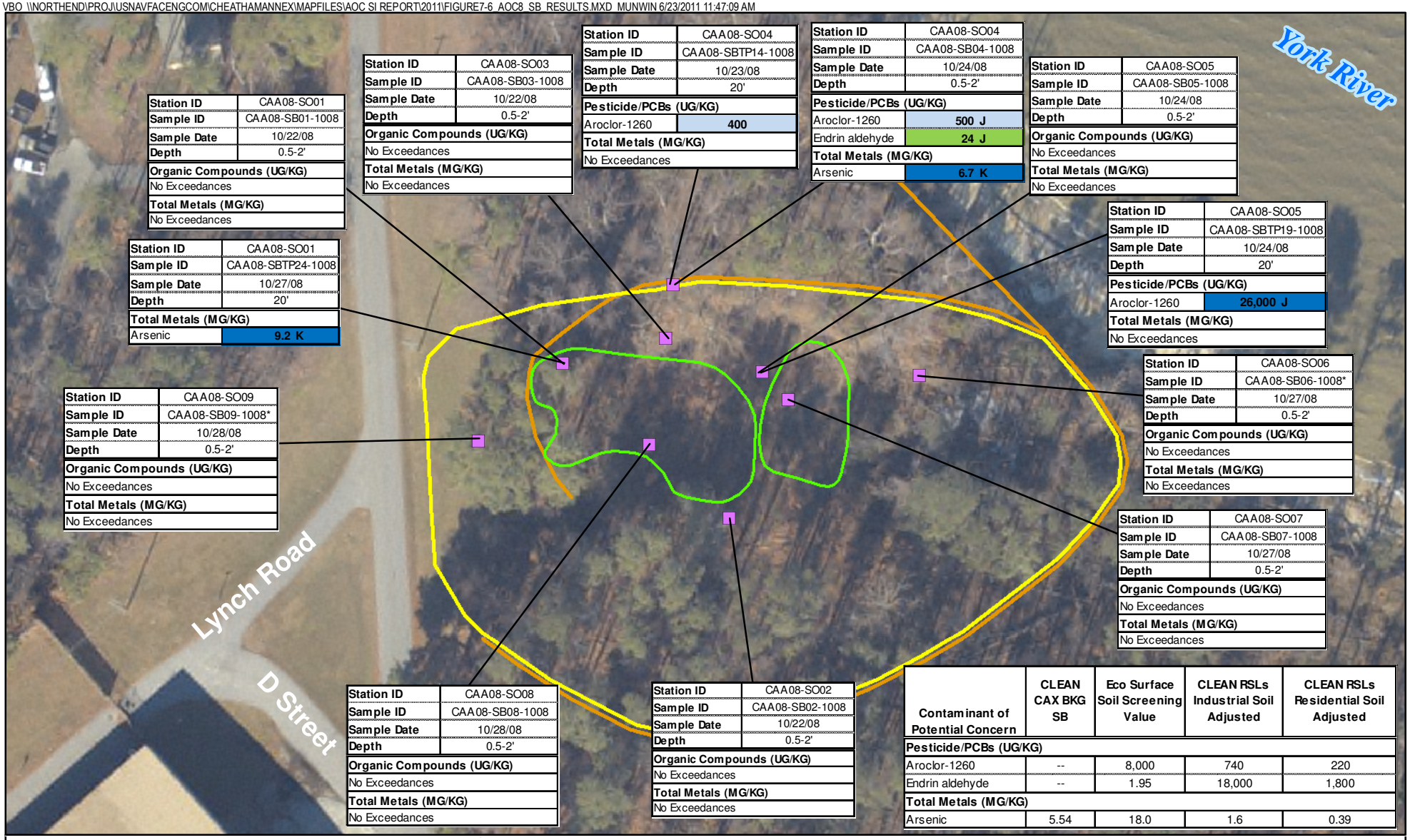

Station ID	CAA08-SO01
Sample ID	CAA08-SB01-1008
Sample Date	10/22/08
Depth	0.5-2'
Organic Compounds (UG/KG)	
No Exceedances	
Total Metals (MG/KG)	
No Exceedances	

Station ID	CAA08-SO01
Sample ID	CAA08-SBTP24-1008
Sample Date	10/27/08
Depth	20'
Total Metals (MG/KG)	
Arsenic	9.2 K

Station ID	CAA08-SO03
Sample ID	CAA08-SB03-1008
Sample Date	10/22/08
Depth	0.5-2'
Organic Compounds (UG/KG)	
No Exceedances	
Total Metals (MG/KG)	
No Exceedances	

Station ID	CAA08-SO04
Sample ID	CAA08-SBTP14-1008
Sample Date	10/23/08
Depth	20'
Pesticide/PCBs (UG/KG)	
Aroclor-1260	400
Total Metals (MG/KG)	
No Exceedances	

Station ID	CAA08-SO04
Sample ID	CAA08-SB04-1008
Sample Date	10/24/08
Depth	0.5-2'
Pesticide/PCBs (UG/KG)	
Aroclor-1260	500 J
Endrin aldehyde	24 J
Total Metals (MG/KG)	
Arsenic	6.7 K

Station ID	CAA08-SO05
Sample ID	CAA08-SB05-1008
Sample Date	10/24/08
Depth	0.5-2'
Organic Compounds (UG/KG)	
No Exceedances	
Total Metals (MG/KG)	
No Exceedances	

Station ID	CAA08-SO05
Sample ID	CAA08-SBTP19-1008
Sample Date	10/24/08
Depth	20'
Pesticide/PCBs (UG/KG)	
Aroclor-1260	26,000 J
Total Metals (MG/KG)	
No Exceedances	

Station ID	CAA08-SO06
Sample ID	CAA08-SB06-1008*
Sample Date	10/27/08
Depth	0.5-2'
Organic Compounds (UG/KG)	
No Exceedances	
Total Metals (MG/KG)	
No Exceedances	

Station ID	CAA08-SO07
Sample ID	CAA08-SB07-1008
Sample Date	10/27/08
Depth	0.5-2'
Organic Compounds (UG/KG)	
No Exceedances	
Total Metals (MG/KG)	
No Exceedances	

Station ID	CAA08-SO09
Sample ID	CAA08-SB09-1008*
Sample Date	10/28/08
Depth	0.5-2'
Organic Compounds (UG/KG)	
No Exceedances	
Total Metals (MG/KG)	
No Exceedances	

Station ID	CAA08-SO08
Sample ID	CAA08-SB08-1008
Sample Date	10/28/08
Depth	0.5-2'
Organic Compounds (UG/KG)	
No Exceedances	
Total Metals (MG/KG)	
No Exceedances	

Station ID	CAA08-SO02
Sample ID	CAA08-SB02-1008
Sample Date	10/22/08
Depth	0.5-2'
Organic Compounds (UG/KG)	
No Exceedances	
Total Metals (MG/KG)	
No Exceedances	

Contaminant of Potential Concern	CLEAN CAX BKG SB	Eco Surface Soil Screening Value	CLEAN RSLs Industrial Soil Adjusted	CLEAN RSLs Residential Soil Adjusted
Pesticide/PCBs (UG/KG)				
Aroclor-1260	--	8,000	740	220
Endrin aldehyde	--	1.95	18,000	1,800
Total Metals (MG/KG)				
Arsenic	5.54	18.0	1.6	0.39

Legend

- Soil Sample Location
- Approximate AOC 8 Study Area
- Observed Surficial Debris
- Approximate Location of Berm

Notes:

- Exceeds BKG & ECO
- Exceeds BKG & Res RSL
- Exceeds BKG, Res & Ind RSL

Samples collected at a depth greater than 2 feet below ground surface were not included in the ecological risk screening.
* Indicates duplicate sample was collected at this location.
Values presented are the higher of the two.
-- - No value available
J - Analyte present, value may or may not be accurate or precise
K - Analyte present, value may be biased high, actual value may be lower
MG/KG - Milligrams per kilogram
UG/KG - Micrograms per kilogram

N W E S

0 35 70 Feet

Figure 7-6
AOC 8 Subsurface Soil Exceedance Results
Site Inspection Report
Areas of Concern 1, 2, 6, 7, and 8
Cheatham Annex
Williamsburg, Virginia

CH2MHILL

VBO \\NORTHEND\PROJ\USNAVFACENGCOM\CHEATHAMANNEX\MAPFILES\AOC SI REPORT\2011\FIGURE7-7_AOC8_GW_RESULTS.MXD MUNWIN 6/22/2011 4:42:20 PM

Contaminant of Potential Concern	CLEAN CAX BKG GW YE AQUIFER	Eco Surface Water Screening Value - Marine	CLEAN MCL-Groundwater	CLEAN RSLs Tapwater Adjusted
Organic Compounds (UG/L)				
Tetrachloroethene	--	45.0	5	0.11
Total Metals (UG/L)				
Arsenic	2.28	36.0	10	0.045
Iron	894	1,000	--	2,600
Manganese	57.9	100	--	88
Dissolved Metals (UG/L)				
Aluminum, Dissolved	100	87.0	--	3,700
Arsenic, Dissolved	1.37	36.0	10	0.045
Cobalt, Dissolved	0.7	23.0	--	1.1
Iron, Dissolved	275	1,000	--	2,600
Manganese, Dissolved	49.5	100	--	88

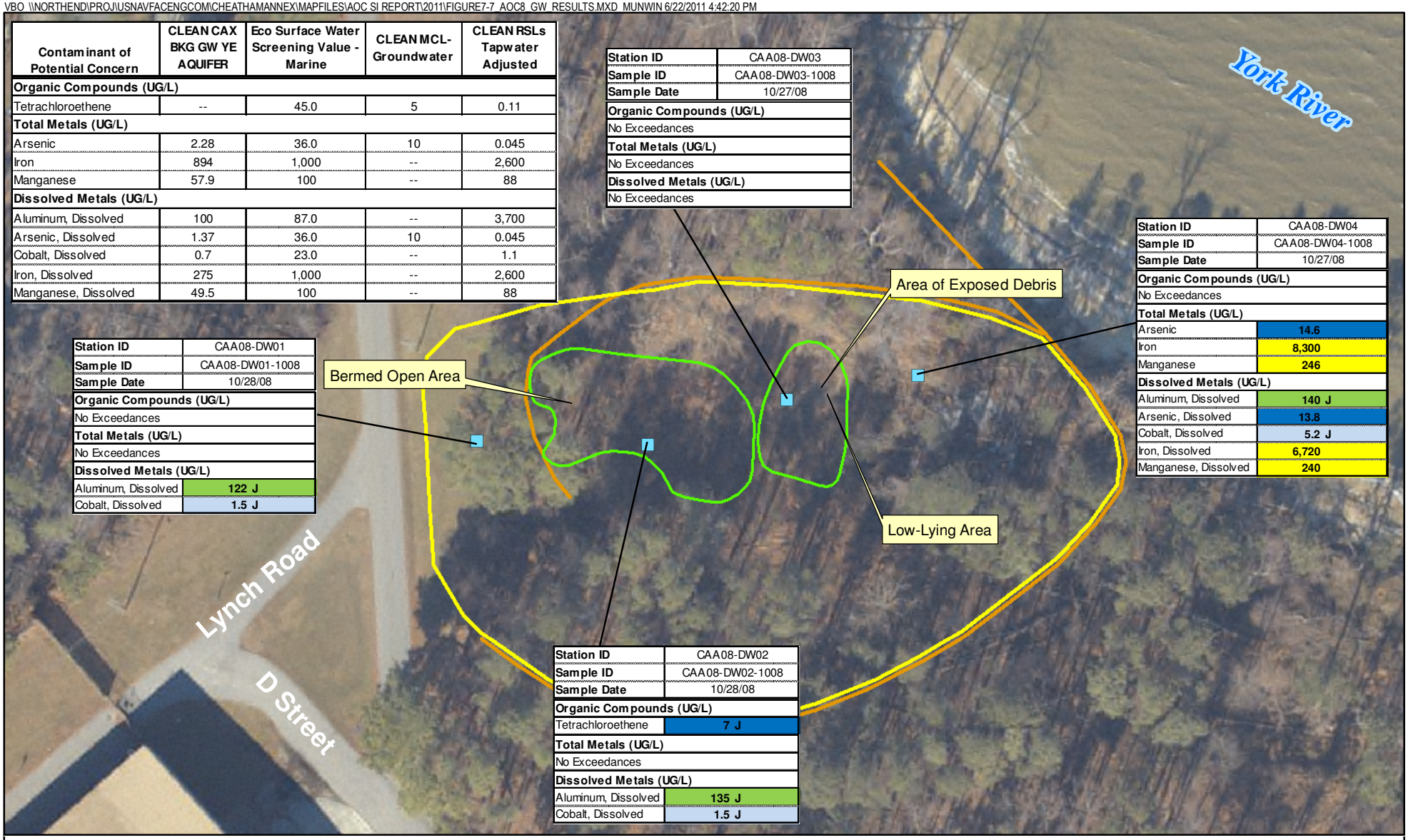

Station ID	CAA08-DW03
Sample ID	CAA08-DW03-1008
Sample Date	10/27/08
Organic Compounds (UG/L)	
No Exceedances	
Total Metals (UG/L)	
No Exceedances	
Dissolved Metals (UG/L)	
No Exceedances	

Station ID	CAA08-DW04
Sample ID	CAA08-DW04-1008
Sample Date	10/27/08
Organic Compounds (UG/L)	
No Exceedances	
Total Metals (UG/L)	
Arsenic	14.6
Iron	8,300
Manganese	246
Dissolved Metals (UG/L)	
Aluminum, Dissolved	140 J
Arsenic, Dissolved	13.8
Cobalt, Dissolved	5.2 J
Iron, Dissolved	6,720
Manganese, Dissolved	240

Station ID	CAA08-DW01
Sample ID	CAA08-DW01-1008
Sample Date	10/28/08
Organic Compounds (UG/L)	
No Exceedances	
Total Metals (UG/L)	
No Exceedances	
Dissolved Metals (UG/L)	
Aluminum, Dissolved	122 J
Cobalt, Dissolved	1.5 J

Station ID	CAA08-DW02
Sample ID	CAA08-DW02-1008
Sample Date	10/28/08
Organic Compounds (UG/L)	
Tetrachloroethene	7 J
Total Metals (UG/L)	
No Exceedances	
Dissolved Metals (UG/L)	
Aluminum, Dissolved	135 J
Cobalt, Dissolved	1.5 J

Legend

- Groundwater/Soil Sample Location
- Approximate AOC 8 Study Area
- Observed Surficial Debris
- Approximate Location of Berm

Notes:

- Exceeds BKG & ECO
- Exceeds BKG & Tapwater RSL
- Exceeds BKG, Tapwater RSL & MCL
- Exceeds BKG, ECO & Tapwater RSL

-- - No value available
J - Analyte present, value may or may not be accurate or precise
UG/L - Micrograms per liter

N W E S

0 35 70 Feet

Figure 7-7
AOC 8 Groundwater Exceedance Results
Site Inspection Report
Areas of Concern 1, 2, 6, 7, and 8
Cheatham Annex
Williamsburg, Virginia

CH2MHILL

Appendix C
Field Standard Operating Procedures

STANDARD OPERATING PROCEDURE

Equipment Blank and Field Blank Preparation

I. Purpose

To prepare blanks to determine whether decontamination procedures are adequate and whether any cross-contamination is occurring during sampling due to contaminated air and dust.

II. Scope

The general protocols for preparing the blanks are outlined. The actual equipment to be rinsed will depend on the requirements of the specific sampling procedure.

III. Equipment and Materials

- Blank liquid (use ASTM Type II or lab grade water)
- Millipore™ deionized water
- Sample bottles as appropriate
- Gloves
- Preservatives as appropriate

IV. Procedures and Guidelines

A. Decontaminate all sampling equipment that has come in contact with sample according to SOP *Decontamination of Personnel and Equipment*.

B. To collect an equipment blank for volatile analysis from the surfaces of sampling equipment other than pumps, pour blank water over one piece of equipment and into two 40-ml vials until there is a positive meniscus, then seal the vials. Note the sample number and associated piece of equipment in the field notebook as well as the type and lot number of the water used.

For non-volatiles analyses, one aliquot is to be used for equipment. For example, if a pan and trowel are used, place trowel in pan and pour blank fluid in pan such that pan and trowel surfaces which contacted the sample are contacted by the blank fluid. Pour blank fluid from pan into appropriate sample bottles.

Do not let the blank fluid come in contact with any equipment that has not been decontaminated.

C. When collecting an equipment blank from a pump, run an extra gallon of deionized water through the pump while collecting the pump outflow into appropriate containers. Make sure the flow rate is low when sampling VOCs. If a Grundfos Redi-Flo2 pump with disposable tubing is used, remove the disposable tubing after sampling but before decon. When decon is complete, put a 3- to 5-foot segment of new tubing onto the pump to collect the equipment blank.

D. To collect a field blank, slowly pour ASTM Type II or lab grade water directly into sample containers.

E. Document and ship samples in accordance with the procedures for other samples.

F. Collect next field sample.

V. Attachments

None.

VI. Key Checks and Items

- Wear gloves.
- Do not use any non-decontaminated equipment to prepare blank.
- Use ASTM-Type II or lab grade water.

STANDARD OPERATING PROCEDURE

Chain-of-Custody

I Purpose

The purpose of this SOP is to provide information on chain-of-custody procedures to be used under the CLEAN Program.

II Scope

This procedure describes the steps necessary for transferring samples through the use of Chain-of-Custody Records. A Chain-of-Custody Record is required, without exception, for the tracking and recording of samples collected for on-site or off-site analysis (chemical or geotechnical) during program activities (except wellhead samples taken for measurement of field parameters). Use of the Chain-of-Custody Record Form creates an accurate written record that can be used to trace the possession and handling of the sample from the moment of its collection through analysis. This procedure identifies the necessary custody records and describes their completion. This procedure does not take precedence over region specific or site-specific requirements for chain-of-custody.

III Definitions

Chain-of-Custody Record Form - A Chain-of-Custody Record Form is a printed two-part form that accompanies a sample or group of samples as custody of the sample(s) is transferred from one custodian to another custodian. One copy of the form must be retained in the project file.

Custodian - The person responsible for the custody of samples at a particular time, until custody is transferred to another person (and so documented), who then becomes custodian. A sample is under one's custody if:

- It is in one's actual possession.
- It is in one's view, after being in one's physical possession.
- It was in one's physical possession and then he/she locked it up to prevent tampering.
- It is in a designated and identified secure area.

Sample - A sample is physical evidence collected from a facility or the environment, which is representative of conditions at the point and time that it was collected.

IV. Procedures

The term "chain-of-custody" refers to procedures which ensure that evidence presented in a court of law is valid. The chain-of-custody procedures track the evidence from the time and place it is first obtained to the courtroom, as well as providing security for the evidence as it is moved and/or passed from the custody of one individual to another.

Chain-of-custody procedures, recordkeeping, and documentation are an important part of the management control of samples. Regulatory agencies must be able to provide the chain-of-possession and custody of any samples that are offered for evidence, or that form the basis of analytical test results introduced as evidence. Written procedures must be available and followed whenever evidence samples are collected, transferred, stored, analyzed, or destroyed.

Sample Identification

The method of identification of a sample depends on the type of measurement or analysis performed. When *in situ* measurements are made, the data are recorded directly in bound logbooks or other field data records with identifying information.

Information which shall be recorded in the field logbook, when in-situ measurements or samples for laboratory analysis are collected, includes:

- Field Sampler(s),
- Contract Task Order (CTO) Number,
- Project Sample Number,
- Sample location or sampling station number,
- Date and time of sample collection and/or measurement,
- Field observations,
- Equipment used to collect samples and measurements, and
- Calibration data for equipment used

Measurements and observations shall be recorded using waterproof ink.

Sample Label

Samples, other than for *in situ* measurements, are removed and transported from the sample location to a laboratory or other location for analysis. Before removal, however, a sample is often divided into portions, depending upon the analyses to be performed. Each portion is preserved in accordance with the Sampling and Analysis Plan. Each sample container is identified by a sample label (see Attachment A). Sample labels are provided, along with sample containers, by the analytical laboratory. The information recorded on the sample label includes:

- Project - CTO Number.
- Station Location - The unique sample number identifying this sample.
- Date - A six-digit number indicating the day, month, and year of sample collection (e.g., 08/21/12).

- Time - A four-digit number indicating the 24-hour time of collection (for example: 0954 is 9:54 a.m., and 1629 is 4:29 p.m.).
- Medium - Water, soil, sediment, sludge, waste, etc.
- Sample Type - Grab or composite.
- Preservation - Type and quantity of preservation added.
- Analysis - VOA, BNAs, PCBs, pesticides, metals, cyanide, other.
- Sampled By - Printed name of the sampler.
- Remarks - Any pertinent additional information.

Using only the work assignment number of the sample label maintains the anonymity of sites. This may be necessary, even to the extent of preventing the laboratory performing the analysis from knowing the identity of the site (e.g., if the laboratory is part of an organization that has performed previous work on the site). The field team should always follow the sample ID system prepared by the project EIS and reviewed by the Project Manager.

Chain-of-Custody Procedures

After collection, separation, identification, and preservation, the sample is maintained under chain-of-custody procedures until it is in the custody of the analytical laboratory and has been stored or disposed.

Field Custody Procedures

- Samples are collected as described in the site Sampling and Analysis Plan. Care must be taken to record precisely the sample location and to ensure that the sample number on the label matches the Chain-of-Custody Record exactly.

- A Chain-of-Custody Record will be prepared for each individual cooler shipped and will include ***only*** the samples contained within that particular cooler. The Chain-of-Custody Record for that cooler will then be sealed in a zip-log bag and placed in the cooler prior to sealing. This ensures that the laboratory properly attributes trip blanks with the correct cooler and allows for easier tracking should a cooler become lost during transit.

- The person undertaking the actual sampling in the field is responsible for the care and custody of the samples collected until they are properly transferred or dispatched.

- When photographs are taken of the sampling as part of the documentation procedure, the name of the photographer, date, time, site location, and site description are entered sequentially in the site logbook as photos are taken. Once downloaded to the server or developed, the electronic files or photographic prints shall be serially numbered, corresponding to the logbook descriptions; photographic prints will be stored in the project files. To identify

sample locations in photographs, an easily read sign with the appropriate sample location number should be included.

- Sample labels shall be completed for each sample, using waterproof ink unless prohibited by weather conditions (e.g., a logbook notation would explain that a pencil was used to fill out the sample label if the pen would not function in freezing weather.)

Transfer of Custody and Shipment

Samples are accompanied by a Chain-of-Custody Record Form. **A Chain-of-Custody Record Form must be completed for each cooler and should include only the samples contained within that cooler**. A Chain-of-Custody Record Form example is shown in Attachment B. When transferring the possession of samples, the individuals relinquishing and receiving will sign, date, and note the time on the Record. This Record documents sample custody transfer from the sampler, often through another person, to the analyst in the laboratory. The Chain-of-Custody Record is filled out as given below:

- Enter header information (CTO number, samplers, and project name).
- Enter sample specific information (sample number, media, sample analysis required and analytical method grab or composite, number and type of sample containers, and date/time sample was collected).
- Sign, date, and enter the time under "Relinquished by" entry.
- Have the person receiving the sample sign the "Received by" entry. If shipping samples by a common carrier, print the carrier to be used in this space (i.e., Federal Express).
- If a carrier is used, enter the airbill number under "Remarks," in the bottom right corner;
- Place the original (top, signed copy) of the Chain-of-Custody Record Form in a plastic zipper-type bag or other appropriate sample-shipping package. Retain the copy with field records.
- Sign and date the custody seal, a 1-inch by 3-inch white paper label with black lettering and an adhesive backing. Attachment C is an example of a custody seal. The custody seal is part of the chain-of-custody process and is used to prevent tampering with samples after they have been collected in the field. Custody seals shall be provided by the analytical laboratory.
- Place the seal across the shipping container opening (front and back) so that it would be broken if the container were to be opened.
- Complete other carrier-required shipping papers.

The custody record is completed using waterproof ink. Any corrections are made by drawing a line through and initialing and dating the change, then entering the correct information. Erasures are not permitted.

Common carriers will usually not accept responsibility for handling Chain-of-Custody Record Forms; this necessitates packing the record in the shipping container (enclosed with other documentation in a plastic zipper-type bag). As long as custody forms are sealed inside the shipping container and the custody seals are intact, commercial carriers are not required to sign the custody form.

The laboratory representative who accepts the incoming sample shipment signs and dates the Chain-of-Custody Record, completing the sample transfer process. It is then the laboratory's responsibility to maintain internal logbooks and custody records throughout sample preparation and analysis.

V Quality Assurance Records

Once samples have been packaged and shipped, the Chain-of-Custody copy and airbill receipt become part of the quality assurance record.

VI Attachments

A. Sample Label
B. Chain of Custody Form
C. Custody Seal

VII References

USEPA. *User's Guide to the Contract Laboratory Program*. Office of Emergency and Remedial Response, Washington, D.C. (EPA/540/P-91/002), January 1991.

Attachment A

Example Sample Label

Quality Analytical Laboratories, Inc.
2567 Fairlane Drive
Montgomery, Alabama 36116
PH. (334)271-2440

Client _____
Sample No. _____
Location _____
_____
Analysis _____
_____
Preservative HCL
Date _____ By _____

CEIMIC
CORPORATION
10 Dean Knauss Drive, Narragansett, R.I. 02882 • (401) 782-8900

SITE NAME	DATE
ANALYSIS	TIME
	PRESERVATIVE

SAMPLE TYPE

☐ Grab ☐ Composite ☐ Other _____

COLLECTED BY:

Attachment B
Example Chain-of-Custody Record

CH2M HILL
APPLIED SCIENCES LABORATORY

CHAIN OF CUSTODY RECORD AND AGREEMENT TO PERFORM SERVICES

CH2M Hill Project # ☐☐☐☐☐☐☐☐.☐☐.☐☐

Purchase Order #

Project Name

Company Name CH2M HILL Office

Project Manager & Phone #
Mr. [ ]
Ms. [ ]
Dr. [ ]

Report Copy to:

Requested Completion Date:

Sampling Requirements: SDWA ☐ NPDES ☐ RCRA ☐ OTHER ____

Sample Disposal: Dispose ☐ Return ☐

Sampling Date	Sampling Time	Type COMP	Type GRAB	Matrix WATER	Matrix SOIL	Matrix AIR	CLIENT SAMPLE ID (9 CHARACTERS)	# OF CONTAINERS	LAB TEST CODES	ANALYSES REQUESTED	REMARKS	LAB 1 ID	LAB 2 ID

SHADED AREA– FOR LAB USE ONLY

Lab 1 #	Lab 2 #
Quote #	Kit Request #
Project #	
No. of Samples	Page of
Login	LIMS Ver

Sampled By & Title (Please sign and print name)	Date/Time	Relinquished By (Please sign and print name)	Date/Time
Received By (Please sign and print name)	Date/Time	Relinquished By (Please sign and print name)	Date/Time
Received By (Please sign and print name)	Date/Time	Relinquished By (Please sign and print name)	Date/Time
Received By (Please sign and print name)	Date/Time	Shipped Via UPS BUS Fed-Ex Hand Other ____	Shipping #
Work Authorized By (Please sign and print name)	Remarks		

QC Level: 1 2 3 Other: ____

COC Rec	ICE
Ana Req	TEMP
Cust Seal	Ph

Instructions and Agreement Provisions on Reverse Side

DISTRIBUTION: Original - LAB, Yellow - LAB, Pink - Client

REV 3/94 FORM 340

Attachment C

Example Custody Seal

CH2M HILL

CUSTODY SEAL

Date

Signature

STANDARD OPERATING PROCEDURE

Decontamination of Personnel and Equipment

I. Purpose

To provide general guidelines for the decontamination of personnel, sampling equipment, and monitoring equipment used in potentially contaminated environments.

II. Scope

This is a general description of decontamination procedures.

III. Equipment and Materials

- Demonstrated analyte-free, deionized ("DI") water (specifically, ASTM Type II water or lab-grade DI water)
- Potable water; must be from a municipal water supplier, otherwise an analysis must be run for appropriate volatile and semivolatile organic compounds and inorganic chemicals (e.g., Target Compound List and Target Analyte List chemicals)
- 2.5% (W/W) Liquinox® (or Alconox®) and water solution
- Concentrated (V/V) pesticide grade isopropanol (DO NOT USE ACETONE)
- Large plastic pails or tubs for Liquinox® and water, scrub brushes, squirt bottles for Liquinox® solution, methanol and water, plastic bags and sheets
- DOT approved 55-gallon drum for disposal of waste
- Personal Protective Equipment as specified by the Health and Safety Plan
- Decontamination pad and steam cleaner/high pressure cleaner for large equipment

IV. Procedures and Guidelines

A. PERSONNEL DECONTAMINATION

To be performed after completion of tasks whenever potential for contamination exists, and upon leaving the exclusion zone.

1. Wash boots in Liquinox® solution, then rinse with water. If disposable latex booties are worn over boots in the work area, rinse with Liquinox® solution, remove, and discard into DOT-approved 55-gallon drum.

2. Wash outer gloves in Liquinox® solution, rinse, remove, and discard into DOT-approved 55-gallon drum.

3. Remove disposable coveralls ("Tyveks") and discard into DOT-approved 55-gallon drum.

4. Remove respirator (if worn).

5. Remove inner gloves and discard.

6. At the end of the work day, shower entire body, including hair, either at the work site or at home.

7. Sanitize respirator if worn.

B. SAMPLING EQUIPMENT DECONTAMINATION—GROUNDWATER SAMPLING PUMPS

Sampling pumps are decontaminated after each use as follows.

1. Don phthalate-free gloves.

2. Spread plastic on the ground to keep equipment from touching the ground

3. Turn off pump after sampling. Remove pump from well and remove and dispose of tubing. Place pump in decontamination tube.

4. Turn pump back on and pump 1 gallon of Liquinox® solution through the sampling pump.

5. Rinse with 1 gallon of 10% isopropanol solution pumped through the pump. (DO NOT USE ACETONE).

6. Rinse with 1 gallon of tap water.

7. Rinse with 1 gallon of deionized water.

8. Keep decontaminated pump in decontamination tube or remove and wrap in aluminum foil or clean plastic sheeting.

9. Collect all rinsate and dispose of in a DOT-approved 55-gallon drum.

10. Decontamination materials (e.g., plastic sheeting, tubing, etc.) that have come in contact with used decontamination fluids or sampling equipment will be disposed of in either DOT-approved 55-gallon drums or with solid waste in garbage bags, dependent on Facility/project requirements.

C. SAMPLING EQUIPMENT DECONTAMINATION—OTHER EQUIPMENT

Reusable sampling equipment is decontaminated after each use as follows.

1. Don phthalate-free gloves.
2. Before entering the potentially contaminated zone, wrap soil contact points in aluminum foil (shiny side out).
3. Rinse and scrub with potable water.
4. Wash all equipment surfaces that contacted the potentially contaminated soil/water with Liquinox® solution.
5. Rinse with potable water.
6. Rinse with distilled or potable water and isopropanol solution (DO NOT USE ACETONE).
7. Air dry.
8. Rinse with deionized water.
9. Completely air dry and wrap exposed areas with aluminum foil (shiny side out) for transport and handling if equipment will not be used immediately.
10. Collect all rinsate and dispose of in a DOT-approved 55-gallon drum.
11. Decontamination materials (e.g., plastic sheeting, tubing, etc.) that have come in contact with used decontamination fluids or sampling equipment will be disposed of in DOT-approved 55-gallon drums or with solid waste in garbage bags, dependent on Facility/project requirements.

D. HEALTH AND SAFETY MONITORING EQUIPMENT DECONTAMINATION

1. Before use, wrap soil contact points in plastic to reduce need for subsequent cleaning.
2. Wipe all surfaces that had possible contact with contaminated materials with a paper towel wet with Liquinox® solution, then a towel wet with methanol solution, and finally three times with a towel wet with distilled water. Dispose of all used paper towels in a DOT-approved 55-gallon drum or with solid waste in garbage bags, dependent on Facility/project requirements.

E. SAMPLE CONTAINER DECONTAMINATION

The outsides of sample bottles or containers filled in the field may need to be decontaminated before being packed for shipment or handled by personnel without hand protection. The procedure is:

1. Wipe container with a paper towel dampened with Liquinox® solution or immerse in the solution AFTER THE CONTAINERS HAVE BEEN SEALED. Repeat the above steps using potable water.

2. Dispose of all used paper towels in a DOT-approved 55-gallon drum or with solid waste in garbage bags, dependent on Facility/project requirements.

F. HEAVY EQUIPMENT AND TOOLS

Heavy equipment such as drilling rigs, drilling rods/tools, and the backhoe will be decontaminated upon arrival at the site and between locations as follows:

1. Set up a decontamination pad in area designated by the Facility

2. Steam clean heavy equipment until no visible signs of dirt are observed. This may require wire or stiff brushes to dislodge dirt from some areas.

V. Attachments

None.

VI. Key Checks and Items

- Clean with solutions of Liquinox®, methanol, and distilled water.
- Do not use acetone for decontamination.
- Drum all contaminated rinsate and materials.
- Decontaminate filled sample bottles before relinquishing them to anyone.

STANDARD OPERATING PROCEDURE

Decontamination of Drilling Rigs and Equipment

I. Purpose and Scope

The purpose of this guideline is to provide methods for the decontamination of drilling rigs, downhole drilling tools, and water-level measurement equipment. Personnel decontamination procedures are not addressed in this SOP; refer to the site safety plan and SOP *Decontamination of Personnel and Equipment*. Sample bottles will not be field decontaminated; instead they will be purchased with certification of laboratory sterilization.

II. Equipment and Materials

- Portable steam cleaner and related equipment
- Potable water
- Phosphate-free detergent such as Liquinox®
- Buckets
- Brushes
- Isopropanol, pesticide grade
- Personal Protective Equipment as specified by the Health and Safety Plan
- ASTM–Type II grade water or Lab Grade DI Water
- Aluminum foil

III. Procedures and Guidelines

A. Drilling Rigs and Monitoring Well Materials

Before the onset of drilling, after each borehole, before drilling through permanent isolation casing, and before leaving the site, heavy equipment and machinery will be decontaminated by steam cleaning at a designated area. The steam-cleaning area will be designed to contain decontamination wastes and waste waters and can be an HDPE-lined, bermed pad. A pumping system will be used to convey decontaminated water from the pad to drums.

Surface casings may be steam cleaned in the field if they are exposed to contamination at the site prior to use.

B. Downhole Drilling Tools

Downhole tools will be steam cleaned before the onset of drilling, prior to drilling through permanent isolation casing, between boreholes, and prior to leaving the site. This will include, but is not limited to, rods, split spoons or similar samplers, coring equipment, augers, and casing.

Before the use of a sampling device such as a split-spoon sampler for the collection of a soil sample for physical characterization, the sampler shall be cleaned by scrubbing with a detergent solution followed by a potable water rinse.

Before the use of a sampling device such as a split-spoon sampler for the collection of a soil sample for chemical analysis, the sampler shall be decontaminated following the procedures outlined in the following subsection.

C. Field Analytical Equipment

1. Water Level Indicators

   Water level indicators that consist of a probe that comes into contact with the groundwater must be decontaminated using the following steps:

   a. Rinse with tap water
   b. Rinse with de-ionized water
   c. Solvent rinse with isopropanol
   d. Rinse with de-ionized water

2. Probes

   Probes, for example, pH or specific ion electrodes, geophysical probes, or thermometers that would come in direct contact with the sample, will be decontaminated using the procedures specified above unless manufacturer's instructions indicate otherwise. For probes that make no direct contact, for example, OVM equipment, the probe will be wiped with clean paper-towels or cloth wetted with isopropanol.

IV. Attachments

None.

V. Key Checks and Preventative Maintenance

- The effectiveness of field cleaning procedures may be monitored by rinsing decontaminated equipment with organic-free water and submitting the rinse water in standard sample containers for analysis.

STANDARD OPERATING PROCEDURE

Sampling Contents of Tanks and Drums

I. Scope and Application

This procedure provides an overview approach and guidelines for the routine sampling of drums and tanks. Its purpose is to describe standard procedures and precautions which are applied in sampling drums and tanks. Procedures for opening drums with the individual instruments are included in Attachment D.

The samples obtained may be used to obtain physical chemical or radiological data. The resulting data may be qualitative or quantitative in nature, and are appropriate for use in preliminary surveys as well as confirmatory sampling.

II. Summary of Methods

Drums are generally sampled by means of sampling tubes such as glass sample tubes or COLIWASA samplers. In either case, the sampling tube is manually inserted into the waste material. A sample of the drum contents is withdrawn by the sampling device. Should a drum contain bottom sludge, a glass tube will be used to retrieve a sample of this as well.

Storage tank and tank trailers, because of their greater depths, require sampling devices that can be lowered from the top, filled at a particular depth, then withdrawn. Such devices are a COLIWASA, a Kemmerer depth sampler, or a Bacon Bomb. Where samples of bottom sludge are desired, a gravity corer can be utilized. This heavy tube with a tapered nose piece will penetrate the sludge as it free falls through the tank.

III. Comments

The sampling of tanks, containers, and drums present unique problems not associated with environmental samples. Containers of this sort are generally closed except for small access ports, manways, or hatches on the larger vessels, or taps and bungs on smaller drums. The physical size, shape, construction material, and location of access limit the types of equipment and methods of collection that can be used.

When liquids are contained in sealed vessels, gas vapor pressure can build up, sludges can settle out, and density layerings (stratification) can develop. Bulging drums may be under pressure and extreme caution should be exercised. The potential exists for explosive reactions or the release of noxious gases when containers are opened. All vessels should be opened with extreme caution. Check the HSP for the level of personnel protection to be worn. A preliminary sampling of any headspace gases is warranted. As a minimum, a preliminary check with an

explosimeter and an organic vapor analyzer may be of aid in selecting a sampling method.

In most cases it is impossible to observe the contents of these sealed or partially sealed vessels. Since some layering or stratification is likely in any solution left undisturbed over time, a sample must be taken that represents the entire depth of the vessel.

IV. Required Equipment and Apparatus

A. **Health and safety equipment/materials**: As listed in the site safety plan.

B. **Sampling equipment**: COLIWASA, glass sample tubes, Kemmerer depth sampler, Bacon Bomb, gravity corer.

C. **Tools**: Rubber mallet, bung wrench, speed wrench with socket, etc., (all non-sparking), paint marker.

D. **Heavy equipment**: Backhoe equipped with explosion shield, drum grappler, and 3-foot copper-beryllium (non-sparking) spike with 6-inch collar (to puncture top of drums for sampling, if necessary).

E. **Sample Containers**: As specified in the field sampling plan.

V. Procedures

A. Drums

NOTE: DO NOT open more than one drum at a time. Each drum must be handled and sampled as a separate entity to reduce vapors in the sampling area.

1. Drums will be sampled on an area-by-area basis. Drums will be sampled after they have been placed in overpack drums but before they are transferred from the excavation to the onsite storage area.

2. Record, in logbook, all pertinent information from visual inspection of drum (e.g., physical condition, leaks, bulges, and labels). Label each drum with a unique identifying number.

3. If possible, stage drums for easy access.

4. If necessary, attach ground strap to drums and grounding point.

5. Remove any standing material (water, etc.) from container top.

6. Using non-sparking tools, carefully remove the bung or lid while monitoring air quality with appropriate instruments. If necessary (and as a last resort), the non-sparking spike affixed to the backhoe can also be used to puncture the drum for sampling. See Attachment D for method of drum opening. Record air-quality monitoring results.

7. When sampling a previously sealed vessel, a check should be made for the presence of bottom sludge. This is accomplished by measuring the depth to apparent bottom, then comparing it to the known interior depth.

8. Agitation to disrupt the layers and rehomogenize the sample is physically difficult and almost always undesirable. If the vessel is greater than 3 feet in depth (say, a 55-gallon drum), the appropriate sampling method is to slowly lower the sampling device (i.e., suction line of peristaltic pump, glass tube) in known increments of length. Discrete samples can be collected from various depths, then combined or analyzed separately. If the depth of the vessel is greater than the lift capacity of the pump, an at-depth water sampler, such as the Kemmerer or Bacon Bomb type, may be required.

9. Extract a representative sample from the drum using a glass rod, COLIWASA, Bacon Bomb, Kemmerer bottle, or gravity corer (See Attachments). Ensure that the entire depth of material is penetrated. Depending on the size of the opening of the drum, three to four takes should be collected from random locations across the drum surface, to ensure a representative sample. Any observed stratification must be recorded in logbook, including number and thickness of the layers and a conceptualized sketch.

10. Record a visual description of the sample (e.g., liquid, solid, color, viscosity, and percent layers).

11. When possible, sampling equipment (like glass tubes) should be expendable and be left inside the drum for disposal with drum contents, once sampling is completed.

12. Place lid, bung, cap, etc., back in place on drum. Tighten hand tight. If necessary, the sampling port can be sealed using a cork.

13. Wipe up spilled material with lab wipes. Wipe off sample containers.

14. Mark the drum with a unique sample identification number and date using a paint marker.

15. Samples will be handled as high hazard samples. Samples will be placed in containers defined according to the analytical needs, wiped clean, and then packed in paint cans for shipping. Packaging, labeling, and preparation for shipment procedures will follow procedures as specified in the field sampling plan.

B. Underground Storage Tanks

1. A sampling team of at least two people is required for sampling—one will collect samples, the other will relay required equipment and implements.

2. Sampling team will locate a sampling port on the tank. Personnel should be wearing appropriate protective clothing at this time and carrying sampling gear.

3. Do not attempt to climb down into tank. Sampling MUST BE accomplished from the top.

4. Collect a sample from the upper, middle, and lower section of the tank contents with one of the recommended sampling devices.

5. If compositing is necessary, ship samples to laboratory in separate containers for laboratory compositing.

6. Samples will be handled as hazardous. Samples will be placed in appropriate containers and packed with ice in a cooler. Packaging, labeling, and preparation for shipment will follow procedures specified in the field sampling plan.

C. Tank Trailers or Above-Ground Storage Tanks

1. A sampling team of two is required. One will collect samples, the other will relay required equipment and implements.

2. Samples will be collected through the manhole (hatch) on top of the tanker or the fill port. Do not open valves at the bottom. Before opening the hatch, check for a pressure gauge or release valve. Open the release valve slowly to bring the tank to atmospheric pressure.

3. If tank pressure is too great, or venting releases large amounts of toxic gas, discontinue venting and sampling immediately. Measure vented gas with organic vapor analyzer and explosimeter.

4. If no release valve exists, slowly loosen hatch cover bolts to relieve pressure in the tank. (Again, stop if pressure is too great.)

5. Once pressure in tank has been relieved, open the hatch and withdraw sample using one of the recommended sampling devices.

6. Sample each trailer compartment.

7. If compositing is necessary, ship samples to laboratory in separate containers for laboratory compositing.

8. Samples will be handled as hazardous. Samples will be placed in appropriate containers and packed with ice in a cooler. Packaging, labeling, and preparation for shipment will follow procedures specified in the field sampling plan.

D. Refer to Attachment B for procedures for sampling with appropriate devices as follows:

<u>Drum</u>

Glass tube – Procedure 1

COLIWASA	–	Procedure 2

<u>Storage Tank and Tank Trailer</u>

COLIWASA	–	Procedure 2
Bacon Bomb	–	Procedure 3
Gravity Corer (for bottom sludge)	–	Procedure 4

VI. Contamination Control

Sampling tools, instruments, and equipment will be protected from sources of contamination prior to use and decontaminated after use as specified in SOP *Decontamination of Personnel and Equipment*. Liquids and materials from decontamination operations will be handled in accordance with the waste management plan. Sample containers will be protected from sources of contamination. Sampling personnel shall wear chemical resistant gloves when handling any samples. Gloves will be decontaminated or disposed of between samples.

VIII. Attachments

A. Collection of Liquid-Containerized Wastes Using Glass Tubes

B. Sampling Containerized Wastes Using the Composite Liquid Waste Sample (COLIWASA)

C. Sampling Containerized Wastes Using the Bacon Bomb Sampler

D. Gravity Corer for sampling Sludges in Large Containers

E. Construction of a Typical COLIWASA

F. Drum Opening Techniques and Equipment

IX. References

A Compendium of Superfund Field Operations Methods, EPA/540/P-87/001, U.S. Environmental Protection Agency, Washington, D.C., 1987.

Data Quality Objectives for Remedial Activities - Development Process, EPA/540/G-87/003, U.S. Environmental Protection Agency, Washington, D.C., 1987.

Annual Book of ASTM Standards, *Standard Recommended Practices for Sampling Industrial Chemicals*, ASTM-E-300, 1986.

Test Method for Evaluating Solid Waste, SW-846, Volume II, Field Methods, Second Edition, U.S. Environmental Protection Agency, Washington, D.C., 1982.

U.S. Environmental Protection Agency, *Characterization of Hazardous Waste Sites – A Method Manual: Volume II, Available Sampling Methods*, USEPA Environmental Monitoring Systems Laboratory, Las Vegas, EPA-600/4-84-076, December, 1984.

Environmental Surveillance Procedures, Quality Control Program, Martin Marietta Energy Systems, ESH/Sub/87-21706/1, Oak Ridge, TN, September 1988.

X. Field Checklist

_____ Sampling Instruments

_____ Tools

_____ Rubber Mallet

_____ Logbook

_____ Safety Glasses or Monogoggles

_____ Safety Shoes

_____ Ice/Cooler, as required

_____ Custody Seals, as required

_____ Chain-of-Custody Forms

_____ Drum Labels, as required

_____ Paint Marker, if drum sampling

_____ Black Indelible Pen

_____ Monitoring Instruments

_____ Labels

_____ Sampling and Analysis Plan

_____ Health and Safety Plan

_____ Decontamination Equipment

_____ Lab Wipes

_____ Lab Spatulas or Stainless Steel Spoons

_____ Chemical Preservatives, as required

_____ Appropriate Containers for Waste and Equipment

_____ Duct Tape

_____ Plastic Sheeting

Attachment A Collection of Liquid-Containerized Wastes Using Glass Tubes

Discussion

Liquid samples from opened containers (i.e., 55-gallon drums) are collected using lengths of glass tubing. The glass tubes are normally 122 centimeters long and 6 to 16 millimeters inside diameter. Larger diameter tubes may be used for more viscous fluids if sampling with the small diameter tube is not adequate. The tubing is broken and discarded in the container after the sample has been collected, eliminating difficult cleanup and disposal problems. This method should not be attempted with less than a two-person sampling team.

Uses

This method provides for a quick, relatively inexpensive means of collecting concentrated containerized wastes. The major disadvantage is from potential sample loss that is especially prevalent when sampling low-viscosity fluids. Splashing can also be a problem and proper protective clothing should always be worn.

Note: A flexible tube with an aspirator attached is an alternative method to the glass tube, and allows various levels to be sampled discretely.

Procedures for Use

1. Remove cover from sample container.
2. Insert glass tubing almost to the bottom of the container. Tubing should be of sufficient length so that at least 30 centimeters extend above the top of the container.
3. Allow the waste in the drum to reach its natural level in the tube.
4. Cap the top of the tube with a safety-gloved thumb or a stopper.
5. Carefully remove the capped tube from the drum. If the tube has passed through more than one layer, the boundary should be apparent in the glass tube.
6. Insert the bottom, uncapped end into the sample container.
7. Partially release the thumb or stopper on the top of the tube and allow the sample to slowly flow into the sample container. If separation of phases is desired, cap off tube before the bottom phase has completely emptied. It may be advisable to have an extra container for "waste," so that the fluid on either side of the phase boundary can be directed into a separate container, allowing collection of pure phase liquids in the sample containers. The liquid remaining after the boundary fluid is removed is collected in yet a third container. NOTE: It is not necessary to put phases in separate containers if analysis of separate phases is not desired.
8. Repeat steps 2 through 6 if more volume is needed to fill the sample container.

9. Remove the tube from the sample container and replace the tube in the drum, breaking it, if necessary, in order to dispose of it in the drum.

Optional Method (if sample of bottom sludge is desired)

1. Remove the cover from the container opening.
2. Insert glass tubing slowly almost to the bottom of the container. Tubing should be of sufficient length so that at least 30 cm extends above the top of the container.
3. Allow the waste in the drum to reach its natural level in the tube.
4. Gently push the tube towards the bottom of the drum into the sludge layer. Do not force it.
5. Cap the top of the tube with a safety-gloved thumb or stopper.
6. Carefully remove the capped tube from the drum and insert the uncapped end into the sample container.
7. Release the thumb or stopper on the top of the tube and allow the sample container to fill to approximately 90 percent of its capacity. If necessary, the sludge plug in the bottom of the tube can be dislodged with the aid of the stainless steel laboratory spatula.
8. Repeat if more volume is needed to fill sample container and recap the tube.

Note:

1. If a reaction is observed when the glass tube is inserted (violent agitation, smoke, light, etc.), the investigators should leave the area immediately.
2. If the glass tube becomes cloudy or smoky after insertion into the drum, the presence of hydrofluoric acid maybe indicated, and a comparable length of rigid plastic tubing should be used to collect the sample.
3. When a solid is encountered in a drum (either layer or bottom sludge) the optional method described above may be used to collect a core of the material, or the material may be collected with a disposable scoop attached to a length of wooden or plastic rod.

Attachment B: Sampling Containerized Wastes using the Composite Liquid Waste Sampler (COLIWASA)

Discussion

The COLIWASA is a much-cited sampler designed to permit representative sampling of multiphase wastes from drums and other containerized wastes. The sampler is commercially available or can be easily fabricated from a variety of materials, including PVC, glass, or Teflon. In its usual configuration it consists of a 152 cm by 4 cm (inside diameter) section of tubing with a neoprene stopper at one end attached by a rod running the length of the tube to a locking mechanism at the other end. Manipulation of the locking mechanism opens and closes the sampler by raising and lowering the neoprene stopper. See Attachment E: Construction of a COLIWASA.

Uses

The COLIWASA is primarily used to sample containerized liquids. The PVC COLIWASA is reported to be able to sample most containerized liquid wastes except for those containing ketones, nitrobenzene, dimethylforamide, mesityloxide, and tetrahydrofuran. A glass COLIWASA is able to handle all wastes unable to be sampled with the plastic unit except strong alkali and hydrofluoric acid solutions. Due to the unknown nature of many containerized wastes, it would therefore be advisable to eliminate the use of PVC materials and use samplers composed of glass or Teflon.

The major drawback associated with using a COLIWASA is concern for decontamination and costs. The sampler is difficult, if not impossible, to decontaminate in the field, and its high cost in relation to alternative procedures (glass tubes) makes it an impractical throwaway item. It still has applications, however, especially in instances where a true representation of a multiphase waste is absolutely necessary.

Procedures for Use

1. Check to make sure the sampler is functioning properly. Adjust the locking mechanism, if present, to make sure the neoprene rubber stopper provides a tight closure.

2. Put the sampler in the open position by placing the stopper rod handle in the T-position and pushing the rod down until the handle sits against the sampler's locking block.

3. Slowly lower the sampler into the liquid waste. Lower the sampler at a rate that permits the levels of the liquid inside and outside the sampler tube to be about the same. If the level of the liquid in the sample tube is lower than that outside the sampler, the sampling rate is too fast and will result in a non-representative sample.

4. When the sampler stopper hits the bottom of the waste container, push the sampler tube downward against the stopper to close the sampler. Lock the sampler in the closed position by turning the T-handle until it is upright and one end rests tightly on the locking block.

5. Slowly withdraw the sampler from the waste container with one hand while wiping the sampler tube with a laboratory wipe with the other hand. A phase boundary, if present, can be observed through the tube.

6. Carefully discharge the sample into a suitable sample container by slowly pulling the lower end of the T-handle away from the locking block while the lower end of the sampler is positioned in a sample container.

7. Unscrew the T-handle of the sampler and disengage the locking block.

Attachment C: Sampling Containerized Wastes using the Bacon Bomb Sampler

Discussion

The Bacon Bomb is designed for the withdrawal of samples from various levels within a storage tank. It consists of a cylindrical body with an internal tapered plunger that acts as a valve to admit the sample. A line attached to the top of the plunger is used to open and close the valve. A removable cover provides a point of attachment for the sample line and has a locking mechanism to keep the plunger closed after sampling. The Bacon Bomb is usually constructed of chrome-plated brass and bronze with a rubber O-ring acting as the plunger-sealing surface. Stainless steel versions are also available. The volumemetric capacity is 8, 16, or 32 oz (237, 473, or 946 ml).

Uses

The Bacon Bomb is a heavy sampler suited best for viscous materials held in large storage tanks or in lagoons. If a more non-reactive sampler is needed, the stainless steel version would be used, or any of the samplers could be coated with Teflon.

Procedures for Use

1. Attach the sample line and the plunger line to the sampler.
2. Measure and then mark the sampling line at the desired depth.
3. Gradually lower the sampler by the sample line until the desired level is reached.
4. When the desired level is reached, pull up on the plunger line and allow the sampler to fill for a sufficient length of time before releasing the plunger line to seal off the sampler.
5. Retrieve the sampler by the sample line, being careful not to pull up on the plunger line, thereby accidentally opening the bottom valve.
6. Wipe off the exterior of the sampler body.
7. Position the sampler over the sample container and release its contents by pulling up on the plunger line.

Attachment D: Gravity Corer for Sampling Sludges in Large Containers

Discussion

A gravity corer is a metal tube with a replaceable tapered nosepiece on the bottom and a ball or other type of check valve on the top. The check valve allows water to pass through the corer on descent but prevents a washout during recovery. The tapered nosepiece facilitates cutting and reduces core disturbance during penetration. Most corers are constructed of brass or steel and many can accept plastic liners and additional weights.

Uses

Corers are capable of collecting samples of most sludges and sediments. They collect essentially undisturbed samples that represent the strata profile that may develop in sediments and sludges during variations in the deposition process. Depending on the density of the substrate and the weight of the corer, penetration to depths of 75 cm (30 in.) can be attained. Exercise care when using gravity corers in vessels or lagoons that have liners because penetration depths could exceed those of the substrate; this could result in damage to the liner material.

Procedures for Use

1. Attach a precleaned corer to the required length of sample line. Solid braided 5-mm (3/16-in.) nylon line is sufficient; however, 20-mm (3/4-in.) nylon is easier to grasp during hand hoisting. An additional weight can be attached to the outside of the corer if necessary.
2. Secure the free end of the line to a fixed support to prevent accidental loss of the corer.
3. Allow corer to free fall through the liquid to the bottom.
4. Retrieve corer with a smooth, continuous, up-lifting motion. Do not bump corer because this may result in some sample loss.
5. Remove nosepiece from corer and slide sample out of corer into stainless steel or Teflon pan (preferred).
6. Transfer sample into appropriate sample bottle with a stainless steel lab spoon or laboratory spatula.

Attachment E: Construction of a Typical COLIWASA

The sampling tube consists of a 1.52-m (5-ft) by 4.13-cm (1-5/8 in) I.D. translucent plastic pipe, usually polyvinyl chloride (PVC) or borosilicate glass plumbing tube. The closure-locking mechanism consists of a short-length, channeled aluminum bar attached to the sampler's stopper rod by an adjustable swivel. The aluminum bar serves both as a T-handle and lock for the samplers' closure system. When the sampler is in the open position, the handle is placed in the T-position and pushed down against the locking block. This manipulation pushes out the neoprene stopper and opens at the sampling tube. In the closed position, the handle is rotated until one leg of the T is squarely perpendicular against the locking block. This tightly seats the neoprene stopper against the bottom opening of he sampling tube and positively locks the sampler in the closed position. The closure tension can be adjusted by shortening or lengthening the stopper rod by screwing it in or out of the T-handle swivel. The closure system of the sampler consists of a sharply tapered neoprene stopper attached to a 0.95-cm (3/8-in) O.D. rod, usually PVC. The upper end of the stopper rod is connected to the swivel of the aluminum T-handle. The sharply tapered neoprene stopper can be fabricated according to specifications by plastic-products manufacturers at an extremely high price, or it can be made in-house by grinding down the inexpensive stopper with a shop grinder.

COLIWASA samplers are typically made out of plastic or glass. The plastic type consists of translucent plastic (usually PVC) sampling tube. The glass COLIWASA uses borosilicate glass plumbing pipe as the sampling tube and a Teflon plastic stopper rod. For purpose of multiphase sampling, clear plastic or glass is desirable in order to observe the profile of the multiphase liquid.

The sampler is assembled as follows:

a. Attach the swivel to the T-handle with the 3.18-cm (1-1/4 in) long bolt and secure with the 0.48-cm (3/16-in) National Coarse (NC) washer and lock nut.

b. Attach the PFTE stopper to one end of the stopper rod and secure with the 0.95-cm (3/8-in) washer and lock nut.

c. Install the stopper and stopper rod assembly in the sampling tube.

d. Secure the locking block sleeve on the block with glue or screw. This block can also be fashioned by shaping a solid plastic rod on a lathe to the required dimension.

e. Position the locking block on top of the sampling tube such that the sleeveless portion of the block fits inside the tube, the sleeve sits against the top end of the tube, and the upper end of the stopper rod slips though the center hole of the block.

f. Attach the upper end of the stopper rod to the swivel of the T-handle.

g. Place the sampler in the close position and adjust the tension on the stopper by screwing the T-handle in or out.

Attachment F: Drum Opening Techniques and Equipment [1]

I. Introduction

The opening of closed drums prior to sampling entails considerable risk if not done with the proper techniques, tools, and safety equipment. The potential for vapor exposure, skin exposure due to splash or spraying, or even explosion resulting from sparks produced by friction of the tools against the drum, necessitate caution when opening any closed container. Both manual drum opening and remote drum opening will be discussed in the following paragraphs. When drums are opened manually risks are greater than when opened remotely; for this reason, the remote opening of drums is advised whenever possible.

Prior to sampling, the drums should be staged to allow easy access. Also, any standing water or other material should be removed from the container top so that the representative nature of the sample is not compromised when the container is opened. There is also the possibility of encountering a water-reactive substance.

II. Manual Drum Opening

A. Bung Wrench

A common method for opening drums manually is using a universal bung wrench. These wrenches have fittings made to remove nearly all commonly encountered bungs. They are usually constructed of cast iron, brass, or a bronze-beryllium (a non-sparking alloy formulated to reduce the likelihood of sparks). The use of bung wrenches marked "NON SPARKING" is encouraged. However, the use of a "NON SPARKING" wrench does not completely eliminate the possibility of spark being produced. Such a wrench only prevents a spark caused by wrench-to-bung friction, but it cannot prevent sparking between the threads on the drum and the bung.

A simple tool to use, the fitting on the bung wrench matching the bung to be removed is inserted into the bung and the tool is turned counterclockwise to remove the bung. Since the contents of some drums may be under pressure (especially, when the ambient temperature is high), the bung should be turned very slowly. If any hissing is heard, the person opening the drum should back off and wait for the hissing to stop. Since drums under pressure can spray out liquids when opened, the wearing of appropriate eye and skin protection in addition to respiratory protection is critical.

B. Drum Deheader

One means by which a drum can be opened manually when a bung is not removable with a bung wrench is by using a drum deheader. This tool is

---

[1] Taken from EPA Training Course: "Sampling for Hazardous Materials," U.S. Environmental Protection Agency, Office of Emergency and Remedial Response Support Division, March 24, 1987.

constructed of forged steel with an alloy steel blade and is designed to cut the lid of a drum off or part way off by means of a scissors-like cutting action. A limitation of this device is that it can be attached only to closed head drums (i.e., DOT Specification 17E and 17F drums); drums with removable heads must be opened by other means.

Drums are opened with a drum deheader by first positioning the cutting edge just inside the top chime and then tightening the adjustment screw so that the deheader is held against the side of the drum. Moving the handle of the deheader up and down while sliding the deheader along the chime will enable the entire top to be rapidly cut off if so desired. If the top chime of a drum has been damaged or badly dented it may not be possible to cut the entire top off. Since there is always the possibility that a drum may be under pressure, the initial cut should be made very slowly to allow for the gradual release of any built-up pressure. A safer technique would be to employ a remote pressure release method prior to using the deheader.

C. Hand Pick or Spike

When a drum must be opened and neither a bung wrench nor a drum deheader is suitable, then it can be opened for sampling by using a hand pick, pickaxe, or spike. These tools are usually constructed of brass or a non-sparking alloy with a sharpened point that can penetrate the drum lid or head when the tool is swung. The hand picks or pickaxes that are most commonly used are commercially available, whereas the spikes are generally uniquely fabricated 4- foot long poles with a pointed end. Often the drum lid or head must be hit with a great deal of force in order to penetrate it. Because of this, the potential for splash or spraying is greater than with other opening methods and therefore this method of drum opening is not recommended, particularly when opening drums containing liquids. Some spikes used for drum opening have been modified by the addition of a circular splash plate near the penetrating end. This plate acts as a shield and reduces the amount of splash in the direction of the person using the spike. Even with this shield, good splash gear is essential.

Since drums, some of which may be under pressure, cannot be opened slowly with these tools, “sprayers” may result and appropriate safety measures must be taken. The pick or spike should be decontaminated after each drum is opened to avoid cross contamination and/or adverse chemical reaction from incompatible materials.

III. Remote Opening

A. Backhoe Spike

The most common means used to open drums remotely for sampling is the use of a metal spike attached or welded to a backhoe bucket. In addition to being very efficient, this method can greatly reduce the likelihood of personnel exposure.

Drums should be “staged,” or placed in rows with adequate aisle space to allow ease in backhoe maneuvering. Once staged, the drums can be quickly opened by punching a hole in the drum head or lid with the spike.

The spike should be decontaminated after each drum is opened to prevent cross contamination. Even though some splash or spray may occur when this method is used, the operator of the backhoe can be protected by mounting a large shatter-resistant shield in front of the operator's cage. This, combined with the normal sampling safety gear, should be sufficient to protect the operator. Additional respiratory protection can be afforded by providing the operator with an on-board airline system. The hole in the drum can be sealed with a cork.

B. Hydraulic Devices

Recently, remotely operated hydraulic devices have been fabricated to open drums remotely. One such device is discussed here. This device uses hydraulic pressure to pierce through the wall of a drum. It consists of a manually operated pump that pressurizes oil through a length of hydraulic line. A piercing device with a metal point is attached to the end of this line and is pushed into the drum by the hydraulic pressure. The piercing device can be attached so that a hole for sampling can be made in either the side or the head/lid of the drum. Some of the metal piercers are hollow or tube-like so that they can be left in place, if desired, and serve as a permanent tap or sampling port. The piercer is designed to establish a tight seal after penetrating the container.

C. Pneumatic Devices

Pneumatically-operated devices utilizing compressed air have been designed to remove drum bungs remotely. A pneumatic bung remover consists of a compressed air supply (usually SCBA cylinders) that is controlled by a heavy-duty, 2-stage regulator. A high pressure air line of desired length delivers compressed air to a pneumatic drill that is adapted to turn a bung fitting (preferably, a bronze-beryllium alloy) selected to fit the bung to be removed. An adjustable bracketing system has been designed to position and align the pneumatic drill over the bung. This bracketing system must be attached to the drum before the drill can be operated. Once the bung has been loosened, the bracketing system must be removed before the drum can be sampled. This attachment and removal procedure is time-consuming and is the major drawback of this device. This remote bung opener does not permit the slow venting of the container, and therefore appropriate precautions must be taken. It also requires the container to be upright and relatively level. Bungs that are rusted shut cannot be removed with this device.

IV. Summary

The opening of closed containers is one of the most hazardous site activities. Maximum efforts would be made to ensure the safety of the sampling team. Proper protective equipment and a general wariness of the possible dangers will minimize the risk inherent to sampling operations. Employing proper drum opening techniques and equipment will also safeguard personnel. The use of remote sampling equipment whenever feasible is highly recommended.

STANDARD OPERATING PROCEDURE

Disposal of Waste Fluids and Solids

I. Purpose and Scope

This SOP describes the procedures used to dispose of hazardous fluid and solid materials generated as a result of the site operations. This SOP does not provide guidance on the details of Department of Transportation regulations pertaining to the transport of hazardous wastes; the appropriate Code of Federal Regulations (49 CFR 171 through 177) should be referenced. Also, the site investigation-derived waste management plan should be consulted for additional information and should take precedence over this SOP.

II. Equipment and Materials

A. Fluids

- DOT-approved 55-gallon steel drums or Baker® Tanks
- Tools for securing drum lids
- Funnel for transferring liquid into drum
- Labels
- Paint Pens
- Marking pen for appropriate labels
- Seals for 55-gallon steel drums

B. Solids

- DOT-approved 55-gallon steel drums or rolloffs
- Tools for securing drum lids
- Paint Pens
- Plastic sheets
- Labels
- Marking pen for appropriate labels

III. Procedures and Guidelines

A. Methodology

Clean, empty drums or rolloffs or Baker® Tanks will be brought to the site by the drilling subcontractor for soil and groundwater collection and storage. The empty drums will be located at the field staging area and moved to drilling locations as required. The drums will be filled with the drilling and well installation wastes, capped, sealed, and moved to the onsite drum storage area by the drilling subcontractor. The full drums will separate types of wastes by media. The drums will

be labeled as they are filled in the field and labels indicating that the contents are pending analysis affixed.

The drum contents will be sampled to determine the disposal requirements of the drilling wastes. The drum sampling will be accomplished through the collection and submittal of composite samples, one sample per 10 drums (check with disposal facility to determine sample frequency) containing the same media. Similar compositing will be performed in each rolloff to obtain a representative sample. The compositing of the sample will be accomplished by collecting a specific volume of the material in each drum into a large sample container. When samples from each of the drums being sampled in a single compositing are collected, the sample will be submitted for TCLP, ignitability, corrosivity, and reactivity analysis. The analysis will be used to determine if drilling wastes are covered by land disposal restrictions.

If rolloffs are used, compositing and sampling of soil will comply with applicable state and federal regulations.

B. Labels

Drums and other containers used for storing wastes from drilling operations will be labeled when accumulation in the container begins. Labels will include the following minimum information:

- Container number
- Container contents
- Origin (source area including individuals wells, piezometers, and soil borings)
- Date that accumulation began
- Date that accumulation ended
- Generator Contact Information
- When laboratory results are received, drum labels will be completed or revised to indicate the hazardous waste constituents in compliance with Title 40 of the Code of Federal Regulations, Part 262, Subpart C if the results indicate hazardous waste or labeled as non-hazardous if applicable.

C. Fluids

Drilling fluids generated during soil boring and groundwater discharged during development and purging of the monitoring wells will be collected in 55-gallon, closed-top drums. When a drum is filled, the bung will be secured tightly. Fluids may also be transferred to Baker® Tanks after being temporarily contained in drums to minimize the amount of drums used.

When development and purging is completed, the water will be tested for appropriate hazardous waste constituents. Compositing and sampling of fluids will comply with applicable state and federal regulations.

D. Solids

The soil cuttings from well and boring drilling will constitute a large portion of the solids to be disposed of.

The solid waste stream also will include plastic sheeting used for decontamination pads, Tyveks, disposable sampling materials, and any other disposable material used during the field operations that appears to be contaminated. These materials will be placed in designated drums.

E. Storage and Disposal

The wastes generated at the site at individual locations will be transported to the drum storage area by the drilling services subcontractor. Drums should be stored on pallets on plastic sheeting with a short berm wall (hay bales or 2 x 4 planks or equivalent) to capture small spills.

Waste solid materials that contain hazardous constituents will be disposed of at an offsite location in a manner consistent with applicable solid waste, hazardous waste, and water quality regulations. Transport and disposal will be performed by a commercial firm under subcontract.

The liquid wastes meeting acceptable levels of discharge contamination may be disposed of through the sanitary sewer system at the site. However, prior to disposal to the sanitary sewer system, approval and contract arrangements will be made with the appropriate authorities. Wastes exceeding acceptable levels for disposal through the sanitary sewer system will be disposed of through contract with a commercial transport and disposal firm.

IV. Attachments

None.

V. Key Checks and Preventative Maintenance

- Check that representative samples of the containerized materials are obtained.
- Be sure that all state and federal regulations are considered when classifying waste for disposal.

STANDARD OPERATING PROCEDURE

Global Positioning System

I. Purpose

The procedure describes the calibration, operation, and functions associated with a Trimble® Pro XRS GPS Unit with a TSC-1 Asset Surveyor for datalogging. GPS signal information is differentially corrected to sub-meter accuracy on a continual basis using a second satellite signal broadcast from OmniSTAR satellite subscription service. The procedure applies to all field data collection activities.

II. Scope

This procedure provides information regarding the field operation and general maintenance of a Trimble® Pro XRS GPS Unit with a TSC-1 Asset Surveyor for datalogging. The information contained herein presents the operation procedures for this equipment. Review of the equipment's instruction manual is a necessity for more detailed descriptions pertaining to the operation and maintenance of the equipment.

III. Definitions

GPS: Global Positioning System - A system of 24 satellites developed and operated by the US DOD. Continuous 3D coordinate information is broadcast free of charge on a worldwide basis enabling precise positional location. Three standard categories of positional accuracy are generally used:

1. Uncorrected Signal - accuracy +/-10 meters - a single satellite transmission is used
2. Differentially Corrected Signal - accuracy +/- <1 meter - additional positional transmissions are recorded simultaneously and used to triangulate coordinate position.
3. Carrier Phase Signal- accuracy +/- <1 centimeter - requires a second receiver and additional software. Both receivers need to be equipped to receive Carrier Phase signals.

IV. Procedures and Guidelines

The procedure for calibration, operation, and maintenance of the GPS unit is outlined below. Daily calibration and battery recharging is typical operating procedure; frequencies other than daily shall be noted in the logbook and reason for increased frequency recorded. If using a different instrument, the operation manual supplied by the manufacturer should be consulted for instructions.

The procedures described below include additional features pre-programmed into the GPS datalogger to aid the data collection process.

A. Calibration

1. Check to ensure that the datalogger and antenna cables are properly connected to the receiver and that the batteries are securely connected.
2. Turn the datalogger unit on by pressing the green **On** key in the bottom left corner. The datalogger will perform a self-calibration. Wait to ensure that the antenna is receiving a sufficient number of satellite signals (usually a minimum of 3).
3. Once the datalogger receives a satellite signal then it is ready for operation.

B. Operations for surveying coordinates of a location

1. The datalogger and GPS receiver are ready for use after the initial self-calibration.
2. Field data may be immediately recorded in the datalogger.
3. The first screen view is the 'Main Menu'. Use the round keypad to select 'Data Collection' and press the **Enter** key.
4. Use the round keypad to select either 'Create new file' or 'Open existing file' and press the **Enter** key. It is not necessary to create a new file at each new location; however, it may be useful to create a new file at the beginning of each day.
5. If a new file is created then the GPS unit will automatically assign it a file name. The file name may be changed if desired. Press the enter key after the file name is assigned. If opening an existing file then use the round keypad to scroll through existing file names.
6. The next screen is 'Antenna options'. Press the **Enter** key to move to the next screen.
7. Select the type of activity to be performed. At the beginning of each day 'Sample Site Detail' should be completed. This allows the operator to enter each field team member, weather, objectives, health and safety meetings, etc. Once the 'Sample Site Detail' is completed then data entry activities may begin including well purging, water level elevations, and sample collection
8. The datalogger prompts the operator when a data field is required and by using the round key pad, numeric, alphanumeric, enter, and escape keys, the operator can perform electronic data capture on the GPS datalogger.
9. Once all information pertaining to an individual site has been recorded, press enter to complete data entry. If GPS signal is obstructed (tree canopy, building height, etc) user may choose to remain in same location until satellite transmission clears the obstruction. This usually takes only a few moments. Data may still be captured and recorded electronically even if GPS signal is insufficient for positioning.
10. To shut down, press the **Escape** key to return to the 'Main Menu'. The unit can be turned off by pressing the green key in the left hand corner. The datalogger should only be turned off when the 'Main Menu' screen is displayed.
11. All data from the datalogger should be downloaded into Trimble Pathfinder Office software on a PC a minimum of once daily. It is recommended that data is downloaded twice daily. Data may be viewed and mapped using Pathfinder Office or exported to

other software. Export file formats support standard ASCII text, generic database .dbf and most GIS and CAD software.

C. Operations for locating a point using coordinates/reacquiring a previously surveyed location

1. The datalogger and GPS receiver are ready for use after the initial self-calibration.
2. Use the Trimble Pathfinder software to load the data file containing the coordinates for each desired location ("programmed location").
3. The first screen view is the 'Main Menu'. Use the keypad to select 'Navigation' and press the **Enter** key.
4. Use the round keypad to select 'Open existing file' to open the file loaded in Step 2 above.
5. Select the location to be reacquired from the screen and press the enter key.
6. A circle with an arrow will appear. As you begin walking, the arrow will point in the direction of the programmed location. Walk in the direction indicated by the arrow.
7. Once you are within 10-feet of the location being reacquired, the GPS unit will display a circle (representing the programmed location) and an "X" (representing the GPS unit). Continue to walk in the direction of the circle until the "X" is centered in the circle. Once the "X" is centered, you are standing at the programmed location.
8. To shut down, press the **Escape** key to return to the 'Main Menu'. The unit can be turned off by pressing the green key in the left hand corner. The datalogger should only be turned off when the 'Main Menu' screen is displayed.

D. Preventive Maintenance

The antenna and datalogger are weatherproof. It is recommended that the receiver remain in the provided backpack carrier. Care should be taken not to crease, pinch or bend the antenna cable. Data should be downloaded from the datalogger a minimum of once daily, twice daily is preferred. At the end of each day the receiver batteries should be recharged. For technical assistance call the rental company through which you acquired the Trimble® unit. Guidance is also provided in the manual and at http://www.trimble.com.

STANDARD OPERATING PROCEDURE

Homogenization of Soil and Sediment Samples

I. Purpose

The homogenization of soil and sediment samples is performed to minimize any bias of sample representativeness introduced by the natural stratification of constituents within the sample.

II. Scope

Standard techniques for soil and sediment homogenization and equipment are provided in this SOP. These procedures do not apply to aliquots collected for VOCs or field GC screening; samples for these analyses should NOT be homogenized.

III. Equipment and Materials

Sample containers, stainless steel spoons or spatulas, and stainless steel pans.

IV. Procedures and Guidelines

Soil and sediment samples to be analyzed for semivolatiles, pesticides, PCBs, metals, cyanide, or field XRF screening should be homogenized in the field. After a sample is taken, a stainless steel spatula should be used to remove the sample from the split spoon or other sampling device. The sampler should not use fingers to do this, as gloves may introduce organic interferences into the sample.

Samples for VOCs should be taken immediately upon collection and should not be homogenized.

Prior to homogenizing the soil or sediment sample, any rocks, twigs, leaves, or other debris should be removed from the sample. The sample should be placed in a decontaminated stainless steel pan and thoroughly mixed using a stainless steel spoon. The soil or sediment material in the pan should be scraped from the sides, corners, and bottom, rolled into the middle of the pan, and initially mixed. The sample should then be quartered and moved to the four corners of the pan. Each quarter of the sample should be mixed individually, and then rolled to the center of the pan and mixed with the entire sample again.

All stainless steel spoons, spatulas, and pans must be decontaminated following procedures specified in SOP *Decontamination of Personnel and Equipment* prior to homogenizing the sample. A composite equipment rinse blank of homogenization equipment should be taken each day it is used.

V. Attachments

None.

VI. Key Checks and Items

- Take VOC samples immediately and do not homogenize the soil.
- Homogenize soil for analyses other than VOCs in a clean, stainless steel bowl.

STANDARD OPERATING PROCEDURE

Trenching for Landfill Delineation

I. Purpose

To provide reference material and general guidance on test pitting using a backhoe during landfill boundary confirmation activities.

II. Equipment and Materials

- Backhoe
- Shovels, picks, scoops
- Camera, slate (or other erasable material) board
- Plastic sheeting and stakes and/or sand bags to cover test pits and excavated soil
- Barricades to secure area around excavation
- Onsite decontamination pad
- Level D personnel protection equipment and onsite site safety officer

III. Procedures and Guidelines

A. General Considerations

Test pits will be excavated along the landfill boundary as indicated by the results of soil borings and/or geophysical surveys.

The onsite crew will photograph any significant features exposed by the test pit. Photographs will include a slate board (or other marker) marked with (at a minimum) test pit number, date and time of photograph, description of feature. Other observations (including soil descriptions) will be recorded in the logbook and/or the test-pit log.

Once test pitting is complete, the pits will be backfilled with the stockpiled soil and re-graded to mimic the original ground surface contour.

B. Trenching Activities

1. Establish work zone according to the site safety plan
2. Calibrate all air quality monitoring instruments
3. Using a clean backhoe (decontaminated following SOP *Decontamination of Personnel and Equipment*), begin excavating perpendicular to and just

outside of the area defined as the landfill boundary during the geophysical survey. Carefully excavate towards the boundary, recording all observations in the logbook, until buried material is encountered. Remove only enough soil to identify the landfill boundary.

4. Monitor the air quality in the breathing zone at 5-minute intervals during trenching activities to ensure the proper level of respiratory protection in being worn by all field team members.

5. Photograph and document the trenching activities as appropriate. Backfill and regrade the test pit, discard plastic sheeting, decontaminate the backhoe, and set up at the next trenching location.

IV. Attachments

Test pit or trenching log (TESTPIT_DIAGRAM.XLS)

V. Key Checks and Items

Ensure that personnel are not allowed to enter the trench when it exceeds depth limitations specified by OSHA.

CH2MHILL

PROJECT NUMBER	TEST PIT NUMBER SHEET __ OF ___

TEST PIT LOG

PROJECT : LOCATION : LOGGER :

ELEVATION : CONTRACTOR :

EXCAVATION EQUIPMENT USED : DATE EXCAVATED:

WATER LEVEL : APPROX. DIMENS: Length: Width: Max. Depth:

DESCRIPTION	COMMENTS
SOIL NAME, USCS GROUP SYMBOL, COLOR, MOISTURE CONTENT, RELATIVE DENSITY, OR CONSISTENCY, SOIL STRUCTURE, MINERALOGY.	DIFFULCULTY IN EXCAVATION, RUNNING GRAVEL, CONDITION, COLLAPSE OF WALLS, SAND HEAVE, DEBRIS ENCOUNTERED, GRADATIONAL CONTACTS, TESTS, INSTRUMENTS, WATER SEEPAGE

TEST PIT DIMENSIONS (FT)

STANDARD OPERATING PROCEDURE

Preparing Field Log Books

I. Purpose

This SOP provides general guidelines for entering field data into log books during site investigation and remediation activities.

II. Scope

This is a general description of data requirements and format for field log books. Log books are needed to properly document all field activities in support of data evaluation and possible legal activities.

III. Equipment and Materials

- Log book
- Indelible pen

IV. Procedures and Guidelines

Properly completed field log books are a requirement for much of the work we perform under the Navy CLEAN contract. Log books are legal documents and, as such, must be prepared following specific procedures and must contain required information to ensure their integrity and legitimacy. This SOP describes the basic requirements for field log book entries.

A. PROCEDURES FOR COMPLETING FIELD LOG BOOKS

1. Field notes commonly are kept in bound, hard-cover logbooks used by surveyors and produced, for example, by Peninsular Publishing Company and Sesco, Inc. Pages should be water-resistant and notes should be taken only with water-proof, non-erasable permanent ink, such as that provided in Sanford Sharpie® permanent markers.

2. On the inside cover of the log book the following information should be included:

   - Company name and address
   - Log-holders name if log book was assigned specifically to that person
   - Activity or location

- Project name
- Project manager's name
- Phone numbers of the company, supervisors, emergency response, etc.

3. All lines of all pages should be used to prevent later additions of text, which could later be questioned. Any line not used should be marked through with a line and initialed and dated. Any pages not used should be marked through with a line, the author's initials, the date, and the note "Intentionally Left Blank."

4. If errors are made in the log book, cross a single line through the error and enter the correct information. All corrections shall be initialed and dated by the personnel performing the correction. If possible, all corrections should be made by the individual who made the error.

5. Daily entries will be made chronologically.

6. Information will be recorded directly in the field log book during the work activity. Information will not be written on a separate sheet and then later transcribed into the log book.

7. Each page of the log book will have the date of the work and the note takers initials.

8. The final page of each day's notes will include the note-takers signature as well as the date.

9. Only information relevant to the subject project will be added to the log book.

10. The field notes will be copied and the copies sent to the Project Manager or designee in a timely manner (at least by the end of each week of work being performed).

B. INFORMATION TO BE INCLUDED IN FIELD LOG BOOKS

1. Entries into the log book should be as detailed and descriptive as possible so that a particular situation can be recalled without reliance on the collector's memory. Entries must be legible and complete.

2. General project information will be recorded at the beginning of each field project. This will include the project title, the project number, and project staff.

3. Scope: Describe the general scope of work to be performed each day.

4. Weather: Record the weather conditions and any significant changes in the weather during the day.

5. Tail Gate Safety Meetings: Record time and location of meeting, who was present, topics discussed, issues/problems/concerns identified,

and corrective actions or adjustments made to address concerns/ problems, and other pertinent information.

6. Standard Health and Safety Procedures: Record level of personal protection being used (e.g., level D PPE), record air monitoring data on a regular basis and note where data were recording (e.g., reading in borehole, reading in breathing zone, etc). Also record other required health and safety procedures as specified in the project specific health and safety plan.

7. Instrument Calibration; Record calibration information for each piece of health and safety and field equipment.

8. Personnel: Record names of all personnel present during field activities and list their roles and their affiliation. Record when personnel and visitors enter and leave a project site and their level of personal protection.

9. Communications: Record communications with project manager, subcontractors, regulators, facility personnel, and others that impact performance of the project.

10. Time: Keep a running time log explaining field activities as they occur chronologically throughout the day.

11. Deviations from the Work Plan: Record any deviations from the work plan and document why these were required and any communications authorizing these deviations.

12. Heath and Safety Incidents: Record any health and safety incidents and immediately report any incidents to the Project Manager.

13. Subcontractor Information: Record name of company, record names and roles of subcontractor personnel, list type of equipment being used and general scope of work. List times of starting and stopping work and quantities of consumable equipment used if it is to be billed to the project.

14. Problems and Corrective Actions: Clearly describe any problems encountered during the field work and the corrective actions taken to address these problems.

15. Technical and Project Information: Describe the details of the work being performed. The technical information recorded will vary significantly between projects. The project work plan will describe the specific activities to be performed and may also list requirements for note taking. Discuss note-taking expectations with the Project Manager prior to beginning the field work.

16. Any conditions that might adversely affect the work or any data obtained (e.g., nearby construction that might have introduced excessive amounts of dust into the air).

17. Sampling Information; Specific information that will be relevant to most sampling jobs includes the following:

- Description of the general sampling area – site name, buildings and streets in the area, etc.
- Station/Location identifier
- Description of the sample location – estimate location in comparison to two fixed points – draw a diagram in the field log book indicating sample location relative to these fixed points – include distances in feet.
- Sample matrix and type
- Sample date and time
- Sample identifier
- Draw a box around the sample ID so that it stands out in the field notes
- Information on how the sample was collected – distinguish between "grab," "composite," and "discrete" samples
- Number and type of sample containers collected
- Record of any field measurements taken (i.e. pH, turbidity, dissolved oxygen, and temperature, and conductivity)
- Parameters to be analyzed for, if appropriate
- Descriptions of soil samples and drilling cuttings can be entered in depth sequence, along with PID readings and other observations. Include any unusual appearances of the samples.

C. SUGGESTED FORMAT FOR RECORDING FIELD DATA

1. Use the left side border to record times and the remainder of the page to record information (see attached example).

2. Use tables to record sampling information and field data from multiple samples.

3. Sketch sampling locations and other pertinent information.

4. Sketch well construction diagrams.

V. Attachments

Example field notes.

0715 ARRIVE ON SITE AT XYZ SITE.
CH2M HILL STAFF:
John Smith: FIELD TEAM LEADER
Bob Builder: SITE SAFETY COORD.
WEATHER: OVERCAST + COOL, 45°F
CHANCE OF LATE SHOWERS
SCOPE: • Collect GROUNDWATER SAMPLES for LTM work at SITE 14
• SUPERVISE SURVEY CREW
AT SITE 17
0725 BB ~~Con~~ ~~JS~~ (JS) Calibrates PID: 101 ppm/100 ppm ok
PID Model #, SERIAL #
0730 BB Calibrates HORIBA METER
Model #, SERIAL #
→ List calibration RESULTS
0738 Survey CREW ARRIVES on SITE
→ List NAMES
0745 BB Holds H+S TALK on Slips, Trips, Falls, Ticks + AIR Monitoring
JS + SURVEY CREW ATTEND
No H+S ISSUES IDENTIFIED as CONCERNS. All work is in "Level D."
0755 JS Conducts site-WIDE AIR Monitoring
All readings = 0.0 ppm in

JS 5-12-03

SITE 14 LTM
BREATHING ZONE (BZ)
0805 Mobilize to well MW-22 to SAMPLE, surveyors SETTING UP AT SITE 17
0815 PM (PAUL PAPER PUSHER) CALLS AND INFORMS JS to collect GW SAMPLE AT well MW-44 today for 24 hour TAT ANALYSIS OF VOCIS
0820 Purging MW-22
→ RECORD WATER QUALITY DATA

JS 5-12-03

0843 Collect SAMPLE AT MW-22 for total TAL Metals AND VOCIS. No Dissolved Metals Needed per PM.
0905 JS + BB Mobilize to SITE 17 to show surveyors wells to Survey.
0942 Mobilize to well MW-22 to Collect SAMPLE
0950 CAN not ACCESS WELL MW-22 due to BASE OPERATIONS; CONTACT PAUL PAPERPUSHER AND HE STATED HE will CHECK on GAINING ACCESS with BASE contact.
0955 Mobilize to well MW-19

JS 5-12-03

STANDARD OPERATING PROCEDURE

Low-Flow Groundwater Sampling from Monitoring Wells – EPA Region I and III

I. Purpose and Scope

This SOP presents general guidelines for the collection of groundwater samples from monitoring wells using low-flow purging and sampling procedures. Operations manuals should be consulted for specific calibration and operating procedures.

II. Equipment and Materials

- Adjustable-rate positive-displacement pump, submersible pump, or peristaltic pump
- Horiba® U-22 or equivalent water quality meters to monitor pH, specific conductance, turbidity, dissolved oxygen, oxidation-reduction potential (ORP), and temperature
- Flow-through cell with inlet/outlet ports for purged groundwater and watertight ports for each probe
- Generator or alternate power source depending on pump type
- Water-level indicator
- Disposable Teflon, Teflon-lined polyethylene tubing or polyethylene tubing for metals and other inorganics
- Plastic sheeting
- Well-construction information
- Calibrated container and stopwatch to determine flow rate
- Sample containers
- In-line disposable 0.45µm filters (QED® FF8100 or equivalent)
- Shipping supplies (labels, coolers, and ice)
- Field book

III. Procedures and Guidelines

A. Setup and Purging

1. Obtain information on well location, diameter(s), depth, and screen interval(s), and the method for disposal of purged water.
2. Calibrate instruments according to manufacturer's instructions.
3. The well number, site, date, and condition are recorded in the field logbook.

4. Plastic sheeting is placed on the ground, and the well is unlocked and opened. All decontaminated equipment to be used in sampling will be placed only on the plastic sheeting until after the sampling has been completed. To avoid cross-contamination, do not let any downhole equipment touch the ground.

5. All sampling equipment and any other equipment to be placed in the well is cleaned and decontaminated before sampling in accordance with SOP *Decontamination of Personnel and Equipment*.

6. Water level measurements are collected in accordance with the *Water Level Measurements* SOP. **Do not measure the depth to the bottom of the well at this time**; this reduces the possibility that any accumulated sediment in the well will be disturbed. Obtain depth to bottom information from well construction log.

7. Attach and secure the tubing to the low-flow pump. Lower the pump slowly into the well and set it at approximately the middle of the screen. Place the pump intake in the middle of the saturated screen length and should be at least two feet above the bottom of the well to avoid mobilization of any sediment present in the bottom.

8. Insert the measurement probes into the flow-through cell. The purged groundwater is directed through the cell, allowing measurements to be collected before the water contacts the atmosphere.

9. If using a generator, locate it 30 feet downwind from the well to avoid exhaust fumes contaminating the samples.

10. Start purging the well at 0.2 to 0.5 liters per minute. Avoid surging. Purging rates for more transmissive formations could be started at 0.5-liter to 1 liter per minute. The initial field parameters of pH, specific conductance, dissolved oxygen, ORP, turbidity, and temperature of water are measured and recorded in the field logbook.

11. The water level should be monitored during purging, and, ideally, the purge rate should equal the well recharge rate so that there is little or no drawdown in the well (i.e., less than 0.3-foot). The water level should stabilize for the specific purge rate. There should be at least 1 foot of water over the pump intake so there is no risk of the pump suction being broken, or entrainment of air in the sample. Record adjustments in the purge rate and changes in depth to water in the logbook. Purge rates should, if needed, be decreased to the minimum capabilities of the pump (0.1- to 0.2-liter per minute) to avoid affecting well drawdown.

12. During purging, the field parameters are measured frequently (every 5 minutes) until the parameters have stabilized. Field parameters are considered stable when measurements meet the following criteria:

    - pH: within 0.1 pH units

- Specific conductance: within 3 percent
- Dissolved oxygen: within 10 percent
- Turbidity: within 10 percent for values greater than 5 NTU; if 3 turbidity values are less than 5 NTU, consider the values as stabilized
- ORP: within 10 mV
- Temperature: within 3 percent

B. Sample Collection

Once purging is complete the well is ready to sample. The elapsed time between completion of purging and collection of the groundwater sample should be minimized. Typically, the sample is collected immediately after the well has been purged, but this is also dependent on well recovery.

Samples will be placed in sample containers that have been cleaned to laboratory standards and are preserved in accordance with the analytical method. The containers are typically pre-preserved, if required.

VOC samples are normally collected first and directly into pre-preserved sample containers.

During purging and sampling, the centrifugal/peristaltic pump tubing must remain filled with water to avoid aeration of the groundwater. It is recommended that ¼ or 3/8 inch inside diameter tubing be used to help insure that the sample tubing remains water filled. If the pump tubing is not completely filled to the sampling point, collect non-VOC dissolved gasses samples first, then increase flow rate slightly until water completely fills the tubing and collect the VOC/dissolved gases samples. Record new flow rate and drawdown depth.

The steps to be followed for sample collection are as follows:

1. The cap is removed from the sample bottle, and the bottle is tilted slightly.
2. The sample is slowly poured from the bailer or discharged from the pump so that it runs down the inside of the sample bottle with a minimum of splashing. The pumping rate should be reduced to approximately 100 ml per minute when sampling VOCs.
3. Inorganics, including metals, may be collected and preserved in the filtered form as well as the unfiltered form. Disposable in-line filters (0.45 micron filter), connected to the end of the sample tubing,, are typically used for field filtration. Samples are field filtered as the water is being placed into the sample container. If a bailer is used, filtration may be driven by a peristaltic pump.

4. Adequate space is left in the bottle to allow for expansion, except for VOC vials, which are filled to the top with a positive meniscus.

5. The bottle is capped and clearly labeled.

6. Samples are placed in appropriate containers and, if necessary, packed with ice in coolers as soon as practical.

7. Nondedicated equipment is cleaned and decontaminated in accordance with the *Decontamination of Personnel and Equipment* SOP.

The following information, at a minimum, will be recorded in the log book:

1. Sample identification (site name, location, and project number; sample name/number and location; sample type and matrix; time and date; sampler's identity)

2. Sample source and source description

3. Field observations and measurements (appearance, volatile screening, field chemistry, sampling method), volume of water purged prior to sampling, number of well volumes purged, and field parameter measurements

4. Sample disposition (preservative; laboratory name, date and time sent; laboratory sample number, chain-of-custody number, sample bottle lot number)

5. Additional remarks

C. Additional remarks

1. If the well goes dry during purging, wait until it recovers sufficiently to remove the required volumes to sample all parameters. It may be necessary to return periodically to the well but a particular sample (e.g., large amber bottles for semivolatile analysis) should be filled at one time rather than over the course of two or more visits to the well.

2. Disposable tubing is disposed of with PPE and other site trash.

IV. Attachments

White paper on reasons and rationale for low-flow sampling.

V. Key Checks and Preventative Maintenance

- The drawdown in the well should be minimized as much as possible (preferably no more than 0.5-foot to 1 foot) so that natural groundwater-flow conditions are maintained as closely as possible.

- The highest purging rate should not exceed 1 liter per minute. This is to keep the drawdown minimized.

- Stirring up of sediment in the well should be avoided so that turbidity containing adsorbed chemicals is not suspended in the well and taken in by the pump.
- Overheating of the pump should be avoided to minimize the potential for losing VOCs through volatilization.
- Keep the working space clean with plastic sheeting and good housekeeping.
- Maintain field equipment in accordance with the manufacturer's recommendations. This will include, but is not limited to:
    - Inspect sampling pump regularly and replace as warranted
    - Inspect quick-connects regularly and replace as warranted
    - Verify battery charge, calibration, and proper working order of field measurement equipment prior to initial mobilization and daily during field efforts

Attachment to the SOP on Low-Flow Sampling Groundwater Sampling from Monitoring Wells

White Paper on Low-Flow Sampling

EPA recommends low-flow sampling as a means of collecting groundwater samples in a way that minimizes the disturbance to the natural groundwater flow system and minimizes the introduction of contamination into the samples from extraneous sources. The following are details about these issues.

When a pump removes groundwater from the well at the same rate that groundwater enters the well through the screen, the natural groundwater-flow system around the well experiences a minimum of disturbance. Some disturbance is bound to occur because you are causing groundwater to flow to the well in a radial fashion that otherwise would have flowed past it. However, the resulting low-flow sample provides the most-representative indication we can get of groundwater quality in the immediate vicinity of the well.

Normally, when a well is pumped at an excessive rate that drops the water level in the well below the water level in the aquifer, the water cascades down the inside of the well screen when it enters the well. The turbulence from this cascading causes gases such as oxygen and carbon dioxide to mix with the water in concentrations that are not representative of the native groundwater and are higher than expected. This causes geochemical changes in the nature of the water that can change the concentrations of some analytes, particularly metals, in the groundwater sample, not mention it's effect on the dissolved oxygen levels that then will be measured in the flow-through cell. Such turbulence also may cause lower-than-expected concentrations of volatile organic compounds due to volatilization.

For wells in which the water level is above the top of the screen, the water up in the riser is out of the natural circulation of the groundwater and, therefore, can become stagnant. This stagnant water is no longer representative of natural groundwater quality because its pH, dissolved-oxygen content, and other geochemical characteristics change as it contacts the air in the riser. If we minimize the drawdown in the well when we pump, then we minimize the amount of this stagnant water that is brought down into the well screen and potentially into the pump. As a result, a more-representative sample is obtained.

Typically, wells contain some sediment in the bottom of the well, either as a residue from development that has settled out of the water column or that has sifted through the sand pack and screen since the well was installed. This sediment commonly has adsorbed on it such analytes as metals, SVOCs, and dioxins that normally would not be dissolved in the groundwater. If these sediments are picked up in the groundwater when the well is disturbed by excessive pumping, they can:

- Make filtering the samples for metals analysis more difficult
- Add unreasonably to the measured concentration of SVOCs and other organic compounds

The SOP for low-flow sampling has been modified recently and should be consulted for additional information about low-flow sampling and ways of dealing with wells in which the water level cannot be maintained at a constant level.

STANDARD OPERATING PROCEDURE

Low-Flow Groundwater Sampling from Monitoring Wells – EPA Region IV

I. Purpose and Scope

This SOP presents general guidelines for the collection of groundwater samples from monitoring wells using low-flow purging and sampling procedures. Operations manuals should be consulted for specific calibration and operating procedures.

II. Equipment and Materials

- Adjustable-rate positive-displacement pump, submersible pump, or peristaltic pump
- Horiba® U-22 or equivalent water quality meters to monitor pH, specific conductance, turbidity, dissolved oxygen, oxidation-reduction potential (ORP), and temperature
- Flow-through cell with inlet/outlet ports for purged groundwater and watertight ports for each probe
- Generator or alternate power source depending on pump type
- Water-level indicator
- Disposable Teflon, Teflon-lined polyethylene tubing or polyethylene tubing for metals and other inorganics
- Plastic sheeting
- Well-construction information
- Calibrated container and stopwatch to determine flow rate
- Sample containers
- In-line disposable 0.45µm filters (QED® FF8100 or equivalent)
- Shipping supplies (labels, coolers, and ice)
- Field book

III. Procedures and Guidelines

A. Setup and Purging

1. Obtain information on well location, diameter(s), depth, and screen interval(s), and the method for disposal of purged water.
2. Calibrate instruments according to manufacturer's instructions.
3. The well number, site, date, and condition are recorded in the field logbook.

4. Plastic sheeting is placed on the ground, and the well is unlocked and opened. All decontaminated equipment to be used in sampling will be placed only on the plastic sheeting until after the sampling has been completed. To avoid cross-contamination, do not let any downhole equipment touch the ground.

5. All sampling equipment and any other equipment to be placed in the well is cleaned and decontaminated before sampling in accordance with SOP *Decontamination of Personnel and Equipment*.

6. Water level measurements are collected in accordance with the *Water Level Measurements* SOP. **Do not measure the depth to the bottom of the well at this time**; this reduces the possibility that any accumulated sediment in the well will be disturbed. Obtain depth to bottom information from well construction log.

7. Attach and secure the tubing to the low-flow pump. Lower the pump slowly into the well and set it at approximately the middle of the screen. Place the pump intake in the middle of the saturated screen length and should be at least two feet above the bottom of the well to avoid mobilization of any sediment present in the bottom.

8. Insert the measurement probes into the flow-through cell. The purged groundwater is directed through the cell, allowing measurements to be collected before the water contacts the atmosphere.

9. If using a generator, locate it 30 feet downwind from the well to avoid exhaust fumes contaminating the samples.

10. Start purging the well at 0.2 to 0.5 liters per minute. Avoid surging. Purging rates for more transmissive formations could be started at 0.5-liter to 1 liter per minute. The initial field parameters of pH, specific conductance, dissolved oxygen, ORP, turbidity, and temperature of water are measured and recorded in the field logbook.

11. The water level should be monitored during purging, and, ideally, the purge rate should equal the well recharge rate so that there is little or no drawdown in the well (i.e., less than 0.3-foot). The water level should stabilize for the specific purge rate. Record adjustments in the purge rate and changes in depth to water in the logbook. Purge rates should, if needed, be decreased to the minimum capabilities of the pump (0.1- to 0.2-liter per minute) to avoid affecting well drawdown. <u>If the water level is drawn down by more than 0.3 feet, purging should be conducted in accordance with SOP *Groundwater Sampling from Monitoring Wells*</u>.

12. During purging, the field parameters are measured frequently (every 5 minutes) until the parameters have stabilized. Field parameters are considered stable when measurements meet the following criteria:

    - pH: within 0.1 pH units

- Specific conductance: within 10 percent
- Turbidity: <10 NTU or within 10 percent
- Temperature: constant

B. Sample Collection

Once purging is complete the well is ready to sample. The elapsed time between completion of purging and collection of the groundwater sample should be minimized. Typically, the sample is collected immediately after the well has been purged, but this is also dependent on well recovery.

Samples will be placed in sample containers that have been cleaned to laboratory standards and are preserved in accordance with the analytical method. The containers are typically pre-preserved, if required.

VOC samples are normally collected first and directly into pre-preserved sample containers (see Special Conditions for Sampling with Peristaltic Pumps).

The steps to be followed for sample collection are as follows:

1. The cap is removed from the sample bottle, and the bottle is tilted slightly.
2. The sample is slowly poured from the bailer or discharged from the pump so that it runs down the inside of the sample bottle with a minimum of splashing. The pumping rate should be reduced to approximately 100 ml per minute when sampling VOCs.
3. Inorganics, including metals, may be collected and preserved in the filtered form as well as the unfiltered form. Disposable in-line filters (0.45 micron filter), connected to the end of the sample tubing,, are typically used for field filtration. Samples are field filtered as the water is being placed into the sample container. If a bailer is used, filtration may be driven by a peristaltic pump.
4. Adequate space is left in the bottle to allow for expansion, except for VOC vials, which are filled to the top with a positive meniscus.
5. The bottle is capped and clearly labeled.
6. Samples are placed in appropriate containers and, if necessary, packed with ice in coolers as soon as practical.
7. Nondedicated equipment is cleaned and decontaminated in accordance with the *Decontamination of Personnel and Equipment* SOP.

The following information, at a minimum, will be recorded in the log book:

1. Sample identification (site name, location, and project number; sample name/number and location; sample type and matrix; time and date; sampler's identity)

2. Sample source and source description
3. Field observations and measurements (appearance, volatile screening, field chemistry, sampling method), volume of water purged prior to sampling, number of well volumes purged, and field parameter measurements
4. Sample disposition (preservative; laboratory name, date and time sent; laboratory sample number, chain-of-custody number, sample bottle lot number)
5. Additional remarks

Special Conditions for Sampling with Peristaltic Pumps
It is not acceptable to collect samples for organic compounds analyses through the flexible tubing used in the pump head. When collecting samples for organic compound analyses it is necessary to use a vacuum container, placed between the pump and the well for sample collection.

The following step-by-step procedures describe the process of sampling with a peristaltic pump and vacuum jug (see note following these procedures for collection of VOC samples):

1. Disconnect the purge tubing from the pump. Make sure the tubing is securely attached to the protective casing or other secure object.
2. Insert the tubing into one of the ferrule nut fittings of a Teflon® vacuum container transfer cap assembly.
3. Place a suitable length of Teflon® tubing between the remaining transfer cap assembly ferrule nut fitting and the vacuum side of the flexible tubing in the peristaltic pump head. Securely hand-tighten both fittings.
4. Turn the pump on. Water should begin to collect in the transfer container (typically a 1-liter "Boston round" glass sample container) within a few minutes. If water does not begin to flow into the container within several minutes, check the transfer cap fittings and make sure the assembly is tightly attached to the container. It may be necessary to tighten the ferrule nuts with a wrench or pliers to achieve a vacuum in the system, particularly when approaching the maximum head difference between the pump and water table (limit of suction).
5. When the transfer container is nearly full, turn off the pump, remove the transfer cap assembly, and pour the sample into the appropriate containers.
6. If additional sample volume is needed, replace the transfer cap assembly, turn the pump on, and collect additional volume.

NOTE: Samples for volatile organic compound analyses cannot be collected using the vacuum jug method. If samples for VOC analyses are required,

they must be collected with a bailer or by other approved methods, such as the "soda straw" method. The "soda straw" method involves allowing the tubing to fill, by either lowering it into the water column (A) or by filling it via suction applied by the pump head (B). If method (A) is used, the tubing is removed from the well after filling and the captured sample is allowed to drain into the sample vial. If method (B) is used, after running the pump and filling the tubing with sample, the pump speed is reduced and the direction reversed to push the sample out of the tubing into the vials. Avoid completely emptying the tubing when filling the sample vials when using method (B) to prevent introducing water that was in contact with the flexible pump head tubing. Either method is repeated, as necessary, until all vials are filled.

Samples for some constituents, primarily inorganic analytes such as metals and cyanide, may be collected directly from the peristaltic pump head tubing. This method is acceptable under the following conditions:

- The pump head tubing must be changed between sampling locations;
- An equipment rinsate blank must be collected by pumping de-ionized water through a piece of the tubing.

C. Additional remarks

1. If the well goes dry during purging, wait until it recovers sufficiently to remove the required volumes to sample all parameters. It may be necessary to return periodically to the well but a particular sample (e.g., large amber bottles for semivolatile analysis) should be filled at one time rather than over the course of two or more visits to the well.
2. Disposable tubing is disposed of with PPE and other site trash.

IV. Attachments

White paper on reasons and rationale for low-flow sampling.

V. Key Checks and Preventative Maintenance

- The drawdown in the well should be minimized as much as possible (preferably no more than 0.5-foot to 1 foot) so that natural groundwater-flow conditions are maintained as closely as possible.
- The highest purging rate should not exceed 1 liter per minute. This is to keep the drawdown minimized.

- Stirring up of sediment in the well should be avoided so that turbidity containing adsorbed chemicals is not suspended in the well and taken in by the pump.
- Overheating of the pump should be avoided to minimize the potential for losing VOCs through volatilization.
- Keep the working space clean with plastic sheeting and good housekeeping.
- Maintain field equipment in accordance with the manufacturer's recommendations. This will include, but is not limited to:
    - Inspect sampling pump regularly and replace as warranted
    - Inspect quick-connects regularly and replace as warranted
    - Verify battery charge, calibration, and proper working order of field measurement equipment prior to initial mobilization and daily during field efforts

Attachment to the SOP on Low-Flow Sampling Groundwater Sampling from Monitoring Wells

White Paper on Low-Flow Sampling

EPA recommends low-flow sampling as a means of collecting groundwater samples in a way that minimizes the disturbance to the natural groundwater flow system and minimizes the introduction of contamination into the samples from extraneous sources. The following are details about these issues.

When a pump removes groundwater from the well at the same rate that groundwater enters the well through the screen, the natural groundwater-flow system around the well experiences a minimum of disturbance. Some disturbance is bound to occur because you are causing groundwater to flow to the well in a radial fashion that otherwise would have flowed past it. However, the resulting low-flow sample provides the most-representative indication we can get of groundwater quality in the immediate vicinity of the well.

Normally, when a well is pumped at an excessive rate that drops the water level in the well below the water level in the aquifer, the water cascades down the inside of the well screen when it enters the well. The turbulence from this cascading causes gases such as oxygen and carbon dioxide to mix with the water in concentrations that are not representative of the native groundwater and are higher than expected. This causes geochemical changes in the nature of the water that can change the concentrations of some analytes, particularly metals, in the groundwater sample, not mention it's effect on the dissolved oxygen levels that then will be measured in the flow-through cell. Such turbulence also may cause lower-than-expected concentrations of volatile organic compounds due to volatilization.

For wells in which the water level is above the top of the screen, the water up in the riser is out of the natural circulation of the groundwater and, therefore, can become stagnant. This stagnant water is no longer representative of natural groundwater quality because its pH, dissolved-oxygen content, and other geochemical characteristics change as it contacts the air in the riser. If we minimize the drawdown in the well when we pump, then we minimize the amount of this stagnant water that is brought down into the well screen and potentially into the pump. As a result, a more-representative sample is obtained.

Typically, wells contain some sediment in the bottom of the well, either as a residue from development that has settled out of the water column or that has sifted through the sand pack and screen since the well was installed. This sediment commonly has adsorbed on it such analytes as metals, SVOCs, and dioxins that normally would not be dissolved in the groundwater. If these sediments are picked up in the groundwater when the well is disturbed by excessive pumping, they can:

- Make filtering the samples for metals analysis more difficult
- Add unreasonably to the measured concentration of SVOCs and other organic compounds

The SOP for low-flow sampling has been modified recently and should be consulted for additional information about low-flow sampling and ways of dealing with wells in which the water level cannot be maintained at a constant level.

STANDARD OPERATING PROCEDURE

Mini RAE Photoionization Detector (PID)

I. Purpose

The purpose of this SOP is to provide general reference information for using the Mini RAE PID in the field. Calibration and operation, along with field maintenance, will be included in this SOP.

II. Scope

This procedure provides information on the field operation and general maintenance of the Mini RAE PID. Review of the information contained herein will ensure that this type of field monitoring equipment will be properly utilized. Review of the owner's instruction manuals is a necessity for more detailed descriptions.

III. Definitions

Volatile Organic Compound (VOC) – Expresses the VOC concentration in ppm

ppm - parts per million: parts of vapor or gas per million parts of air by volume.

IV. Procedures

The Mini RAE utilizes the principle of a detecting sensor. The PID operates on the principle that most organic compounds and some inorganic compounds are ionized when they are bombarded by high-energy ultraviolet light. These compounds absorb the energy of the light, which excites the molecules and results in a loss of electron and the formation of a positively charged ion. The number of ions formed and the ion current produced is directly proportional to mass and concentration. The amount of energy required to displace an electron is called photo ionization potential (PIP). The air sample is drawn into a UV lamp using a pump or a fan. The energy of the lamp determines whether a particular chemical will be ionized. Each chemical compound has a unique ionizing potential. When the UV light energy is greater than the ionization potential of the chemical, ionization will occur. When the sample is ionized, the electrical signal is displayed on an analog or digital output. Although the output does not distinguish between chemicals, it does detect an increase in the ion current. If only one chemical is present in the air, it is possible to use PIDs quantitatively. Chemical structure and lamp intensity affects the sensitivity of the instrument to a given contaminant. All PID readings are relative to the calibration gas, usually isobutylene. It is important to calibrate the PID in the same temperature and elevation that the equipment will be used, and to determine the background concentrations in the field before taking measurements. For

environments where background readings are high, factory zero calibration gas should be used.

Note: For volatile and semi-volatile compounds, knowing the PIP is critical in determining the appropriate instrument to use when organic vapor screening. Consult the QAPP and manufacturer's manual to determine that the proper instrument has been selected for the contaminate vapors of interest. If an expected compound at a site has a PIP less than 11.7 eV, it is possible to use a PID. If the ionization potential is greater than 11.7eV, an FID is required.

The following subsections will discuss Mini RAE calibration, operation, and maintenance. These sections, however, do not take the place of the instruction manual.

A. Calibration

Start up Instrument

- Press **Mode** button
- Observe displays:

```
On!……..
```

```
Version X.XX
```

```
Model Number
SN XXXX
```

```
Date Time
Temp
```

- After the monitor is turned on and it runs through the startup menus, the display will read "Ready". Press the **[Y/+]** key to start the pump.
- The pump will start, the seconds will count down to zero, and the instrument will be ready for use

Calibration Check and Adjustment

Allow instrument to warm up for 15 minutes.

- Depress the **[N/-]** key first, then while depressing the **[N/-]**, depress the **[Mode]** key also and depress both keys for 5 seconds.
- Display will read:

```
Calibrate
Monitor?
```

- Press the **[Y/+]** key
- Display will read:

Fresh Air Calibration?

- Perform the Fresh Air Calibration in an area free of any detectable vapor near your work zone.
- Press the **[Y/+]** key
- Display will read:

Zero…. In progress…

Wait…

Update data…

Zeroed…

Reading = X.X ppm

- Press any key and the display will go back to:

Fresh Air Calibration?

- Press the **[N/+]** key
- Display will read:

Span/Cal?

- Press the **[Y/+]** key
- Display will read:

Isobutylene = 100 ppm

Apply Gas Now!

- Press the **[Y/+]** key
- Apply calibration gas – use either HAZCO Services Part Number R-SGRAE4 or Rae Systems Part Number 008-3002 – using a .5 LPM regulator and direct tubing.

Wait…30

- The display will count down showing the number of remaining seconds:

Reading = 100

Update data, span cal done. Turn off gas!

- Calibration readings between 99 and 102 ppm are within the acceptable range.
- Display will read:

Span/Cal?

- **CALIBRATION IS COMPLETE!**
- Press any key to return to operational mode.

B. Operation

Due to the Mini RAE having many functions in terms of operation, it is recommended that you follow the operational procedures as outlined in the instruction manual from pages 2-5 to 2-14.

C. Site Maintenance

After each use, the meter should be recharged and the outside of the instruments should be wiped clean with a soft cloth.

D. Scheduled Maintenance

Function	Frequency
Check alarm and settings	Monthly/before each use
Clean screens and gaskets around sensors	Monthly
Replace sensors	Biannually or when calibration is unsuccessful

V. Quality Assurance Records

Quality assurance records will be maintained for each air monitoring event. The following information shall be recorded in the field logbook.

- Identification - Site name, date, location, CTO number, activity monitored, (surface water sampling, soil sampling, etc), serial number, time, resulting concentration, comments and identity of air monitoring personnel.
- Field observations - Appearance of sampled media (if definable).
- Additional remarks (e.g, Mini RAE had wide range fluctuations during air monitoring activities.)

VI. References

Mini RAE 2000 Portable VOC PGM-7600, RAE Systems, Revision E, May 2005.

STANDARD OPERATING PROCEDURE

General Guidance for Monitoring Well Installation

I. Purpose

To provide site personnel with a review of the well installation procedures that will be performed. These procedures are to be considered general guidelines only and are in no way intended to supplement or replace the contractual specifications in the driller's subcontract.

II. Scope

Monitoring well installations are planned for shallow and/or deep unconsolidated aquifers and/or for bedrock aquifers. The SOPs *Installation of Shallow Monitoring Wells, Installation of Surface-Cased Monitoring Wells, Installation of Bedrock Monitoring Wells,* and *Installation of Monitoring Wells Using Sonic Drilling* provide more specifics.

III. Equipment and Materials

1. Drilling rig (hollow stem auger, sonic, air hammer, air rotary, or mud rotary)
2. Well-construction materials (i.e., surface casing, screens, riser, casing, caps, bottom plugs, centering guides, sand, bentonite, grout, and surface-finish materials)
3. Development equipment

IV. Procedures and Guidelines

1. Wells will be installed in accordance with standard EPA procedures. Note that USEPA Region III requires any well penetrating a confining layer to be double-cased.
2. The threaded connections will be water-tight.
3. Well screens generally will be constructed of 10-slot or 20-slot Schedule 40 PVC and will be 5 to 10 feet in length depending on saturated thickness of unconsolidated sediments. The exact slot size and length will be determined by the field team supervisor. Stainless steel may be required under certain contaminant conditions.
4. Stick-up wells will be surrounded by four concrete-filled guard posts at least 2 inches in diameter.

5. A record of the finished well construction will be compiled.

6. All soils and liquids generated during well installations will be drummed for proper disposal.

Monitoring Well Installation

- 2″ monitoring wells in unconsolidated materials will be installed in at least 6-inch-diameter boreholes to accommodate well completion materials in designated locations.

- All monitoring wells penetrating a confining layer will be surface-cased from the ground surface to approximately 5 feet into the confining layer. Exceptions to this may be allowed under certain circumstances (e.g., evidence of significant natural gaps in the confining layer).

- Monitoring wells in unconsolidated materials will be constructed of 2-inch-diameter, factory manufactured, flush-jointed, Schedule 40 PVC (or stainless steel) screen with threaded bottom plug and riser.

- Screens will be filter packed with a properly sized and graded, thoroughly washed, sound, durable, well-rounded basalt or siliceous sand. When using hollow-stem augers, the filter pack will be installed by slowly pouring the sand into the annular space while simultaneously raising the augers and using a weighted tape to sound for the sand surface. For rotary-drilled wells, the height of the sand pack also will be sounded with a weighted tape.

- The primary filter sand pack (typically Morie #00 or DSI #1 for a 10-slot screen) will extend from 1 to 2 feet below the base to 2 feet above the top of the screen; filter pack will be allowed to settle before final measurement is taken. For wells deeper than 30 feet, the filter pack will be placed using a tremie pipe and flowing water.

- A secondary filter sand pack (typically a fine sand seal) 1-foot thick may be placed above the primary sand pack.

- Annular well seals will consist of 2 feet of pelletized, chip, or granular bentonite clay placed above the filter pack. If necessary the pellets will be hydrated using potable water. For wells installed using hollow-stem augers, the bentonite will be poured into the annular space while slowly raising the augers and sounding for the top of the bentonite with a weighted tape. A high-solids bentonite slurry using powdered bentonite introduced with a side-discharging tremie pipe will be used for the bentonite seals in wells greater than 30 feet deep. For rotary-drilled wells, the height of the well seal also will be sounded with a weighted tape. High-solids slurries will have solids content of at least 20 percent.

- The top of the annular seal will be measured after the bentonite seal has been allowed to hydrate and before the grout is applied. The seal will be allowed to hydrate for at least 30 minutes before work in the well continues.

- The annular space above the bentonite seal will be filled to grade with a bentonite-cement slurry grout mixture.
- The grout mixture consists of 6 to 8 gallons of water per 94-pound bag of Portland cement; 3 to 6 pounds of bentonite added per bag of cement to reduce shrinkage.
- The grout mix will be carefully applied to avoid disturbing the bentonite seal; the method of grout placement must force grout from the top of the bentonite seal to ground surface.
- After allowing the grout to settle and set up overnight, additional grout will be added to maintain grade.
- A protective steel casing equipped with keyed alike locking caps will be grouted in place for each new well; the casing will extend at least 2 feet above grade and 3 feet below grade, and will be painted a bright color.

Well Development

- New monitoring wells will be developed after the well has been completely installed and the grout has hardened (at least 24 hours)
- The well will be developed by surging and pumping.
- Equipment placed in the well will be decontaminated before use.
- If information is available, begin developing in the least-contaminated well first.
- Development will include surging the well by either abruptly stopping flow and allowing water in the well column to fall back into the well or through the use of a surge block that is slightly smaller in diameter than the well casing inner diameter.
- Pipes and pumps must not be fitted with foot valves or other devices that might inhibit the return flow of water to the well.
- Surging should continue throughout the development process.
- The air-lift method may be used to pump materials out of the well. The air compressor will be fitted with filters to remove all oil and the air lift hose used will be made of inert materials.
- Well development will continue until the water produced is free of turbidity, sand, and silt. A Horiba-U22 meter, YSI meter with separate Hanna turbidity meter, or equivalent should be used to determine when the turbidity is low and parameters have stabilized.
- Development water will be considered hazardous and placed in sealed 55-gallon U.S. DOT approved steel drums. CH2M HILL will label and date the drums as pending analysis, and transport the drums to a designated site for storage.

V. Attachments

None.

VI. Key Check and Items

- Ensure that all equipment is properly decontaminated as needed.
- Only new, sealed materials (e.g., screens, risers, and sand) will be used in constructing the well.
- Care shall be taken when making downhole measurements to ensure that proper heights of sand, seal, and grout are achieved.

STANDARD OPERATING PROCEDURE

Groundwater Sampling from Monitoring Wells – EPA Region I and III

I. Purpose and Scope

This procedure presents general guidelines for collecting groundwater samples from monitoring wells. The procedure does not address purging and sampling using "low-flow" techniques (see SOP *Low-Flow Groundwater Sampling from Monitoring Wells – EPA Region I and III)*. Operations manuals should be consulted for specific calibration and operating procedures.

II. Equipment and Materials

- Peristaltic pump, pneumatic bladder pump, or electric submersible pump, pump shroud, tubing, support cables, air compressor, control box, and power supply
- Water quality meter, such as Horiba® U-22 or a combination of equivalent devices for monitoring pH, specific conductance, turbidity, dissolved oxygen, oxidation-reduction potential (ORP), and temperature
- Flow through cell with inlet/outlet ports for purged groundwater and watertight ports for each water quality probe
- Disposable 0.45µm filters (QED® FF8100 or equivalent), if applicable
- Bailer (Teflon or stainless steel) and nylon cord, if applicable

Note: bailers and peristaltic pumps should only be used when site access or other limitations prevent the use of sampling pumps

III. Procedures and Guidelines

A. Setup and Purging

1. Obtain information on well location, diameter(s), depth, and screened interval(s), and the method for disposal of purged water.
2. A pump will be used for well purging if the well yield is adequate; otherwise, a bailer may be used depending on project requirements.
3. Sampling equipment is cleaned and decontaminated prior to sampling in accordance with SOP *Decontamination of Personnel and Equipment*.

4. Instruments are calibrated according to manufacturer's instructions.

5. The well number, site, date, and condition are recorded in the field logbook.

6. Plastic sheeting is placed on the ground, and the well is unlocked and opened.

7. Water level measurements are collected in accordance with the *Water Level Measurement* SOP.

8. The volume (v) of water in a well casing is calculated as follows:

$$v = 7.48(\pi r^2 h)$$

where: $\pi = 3.14$
v=volume of water in well (gallons)
r = Radius of the well (feet)
h = height of water in well (feet)

The volume of water in common well casing diameters may be calculated as follows:

2-inch diameter well:
0.163 gal/ft x ___ (linear feet of water) = gallons

4-inch diameter well:
0.653 gal/ft x ___ (linear feet of water) = gallons

6-inch diameter well:
1.469 gal/ft x ___ (linear feet of water) = gallons

9. Attach tubing, support cable or rope, and air line (if applicable) to the pump. The support line should bear the weight of the pump. Set pump in the well at the desired sampling interval, typically mid-screen, and begin purging. If a bailer is being used, it is removed from its protective covering and attached to a cord compatible with constituents.

10. If a RediFlo or other similar electric submersible pump is to be used in a large diameter well (greater than 4 inches), a pump shroud should be used to direct the flow of water across the pump motor. Failure to use a shroud in this situation can lead to overheating of the motor and loss of volatiles from the pump discharge.

11. If a bailer is being used, it should be removed from its protective covering and attached to a cord compatible with the site contaminants. The bailer should be lowered into the top of the water column, allowed to fill, and removed. It is critical that bailers be slowly and gently immersed into the top of the water column, particularly during final stages of purging, to minimize turbidity and disturbance of volatile organic constituents. The use of bailers for purging and sampling is

discouraged because the correct technique is highly operator dependent and improper use may result in an unrepresentative sample.

12. Field parameters including pH, ORP, turbidity, dissolved oxygen, specific conductance, and temperature are measured and recorded in the field logbook. The water quality probes are inserted into a flow-through cell. The purged groundwater is directed through the cell by connecting the pump discharge tubing to the bottom port on the flow through cell, allowing measurements to be collected before the water contacts the atmosphere.

13. During purging, the water quality parameters are measured at least once for each well volume. A minimum of three well volumes must be purged (up to 5 well volumes may be purged if water quality parameters do not stabilize) prior to sampling. In nonproductive wells, if the well is purged dry, it is <u>not necessary to remove a minimum of three well volumes</u>; however, the well should be allowed to recover sufficiently to allow collection of all samples.

14. Three to five well volumes are purged (more may be purged if parameters do not stabilize). Purging is stopped when field parameters have stabilized over three consecutive well volumes. Field Water quality parameters are considered stable when pH measurements agree within 0.1 units, specific conductance measurements agree within 3 percent, ORP measurements agree within 10 mV, dissolved oxygen measurements agree within 10 percent, and turbidity measurements agree within 10 percent or are as low as practicable given sampling conditions.

B. Sample Collection

Once purging is complete the well is ready to sample. The elapsed time between completion of purging and collection of the groundwater sample should be minimized. Typically, the sample is collected immediately after the well has been purged, but this is also dependent on well recovery.

Samples will be placed in sample containers that have been cleaned to laboratory standards and are preserved in accordance with the analytical method. The containers are typically pre-preserved, if required.

The steps to be followed for sample collection are as follows:

1. The cap is removed from the sample bottle, and the bottle is tilted slightly.

2. The sample is slowly poured from the bailer or discharged from the pump so that it runs down the inside of the sample bottle with a minimum of disturbance. The pumping rate should be reduced to approximately 100 ml per minute when sampling VOCs.

3. Inorganics, including metals, may be collected and preserved in the filtered form as well as the unfiltered form. Disposable in-line filters

(0.45 micron filter), connected to the end of the sample tubing,, are typically used for field filtration. Samples are field filtered as the water is being placed into the sample container. If a bailer is used, filtration may be driven by a peristaltic pump.

4. Adequate space is left in the bottle to allow for expansion, except for VOC vials, which are filled to the top with a positive meniscus.

5. The bottle is capped and clearly labeled.

6. Samples are placed in appropriate containers and, if necessary, packed with ice in coolers as soon as practical.

7. If the sample tubing or bailer is dedicated, it is returned to the well and the well is capped and locked. Nondedicated equipment is cleaned and decontaminated in accordance with the *Decontamination of Personnel and Equipment* SOP.

The following information, at a minimum, will be recorded in the log book:

1. Sample identification (site name, location, and project number; sample name/number and location; sample type and matrix; time and date; sampler's identity)

2. Sample source and source description

3. Field observations and measurements (appearance, volatile screening, field chemistry, sampling method), volume of water purged prior to sampling, number of well volumes purged, and field parameter measurements

4. Sample disposition (preservative; laboratory name, date and time sent; laboratory sample number, chain-of-custody number, sample bottle lot number)

Additional remarks

IV. Attachments

None.

V. Key Checks and Preventative Maintenance

- Use of peristaltic pumps and bailers should be avoided, if possible.
- Allow the field parameters to stabilize within the specified criteria as much as possible.
- Fill bottles for VOC samples first.
- Be sure the sample identification is properly specified.

- Maintain field equipment in accordance with the manufacturer's recommendations. This may include, but is not limited to:
  - Inspect sampling pump regularly and replace as warranted
  - Bring supplies for replacing the bladder and "O" rings if using a positive-displacement bladder pump
  - Inspect tubing regularly and replace as warranted
  - Inspect air/sample line quick-connects regularly and replace as warranted
  - Verify battery charge, calibration, and proper working order of field measurement equipment prior to initial mobilization and daily during field efforts

STANDARD OPERATING PROCEDURE

Groundwater Sampling from Monitoring Wells - EPA Region IV

I. Purpose and Scope

This procedure presents general guidelines for collecting groundwater samples from monitoring wells. The procedure does not address purging and sampling using "low-flow" techniques (see SOP *Low-Flow Groundwater Sampling from Monitoring Wells – EPA Region IV)*. Operations manuals should be consulted for specific calibration and operating procedures.

II. Equipment and Materials

- Peristaltic pump, pneumatic bladder pump, or electric submersible pump, pump shroud, tubing, support cables, air compressor, control box, and power supply
- Water quality meter, such as Horiba® U-22 or a combination of equivalent devices for monitoring pH, specific conductance, turbidity, dissolved oxygen, oxidation-reduction potential (ORP), and temperature
- Flow through cell with inlet/outlet ports for purged groundwater and watertight ports for each water quality probe
- Disposable 0.45µm filters (QED® FF8100 or equivalent), if applicable
- Bailer (Teflon or stainless steel) and nylon cord, if applicable

Note: bailers and peristaltic pumps should only be used when site access or other limitations prevent the use of sampling pumps

III. Procedures and Guidelines

A. Setup and Purging

1. Obtain information on well location, diameter(s), depth, and screened interval(s), and the method for disposal of purged water.
2. A pump will be used for well purging if the well yield is adequate; otherwise, a bailer may be used depending on project requirements.
3. Sampling equipment is cleaned and decontaminated prior to sampling in accordance with SOP *Decontamination of Personnel and Equipment*.

4. Instruments are calibrated according to manufacturer's instructions.

5. The well number, site, date, and condition are recorded in the field logbook.

6. Plastic sheeting is placed on the ground, and the well is unlocked and opened.

7. Water level measurements are collected in accordance with the *Water Level Measurement* SOP.

8. The volume (v) of water in a well casing is calculated as follows:

$$v = 7.48(\pi r^2 h)$$

where: $\pi = 3.14$
v=volume of water in well (gallons)
r = Radius of the well (feet)
h = height of water in well (feet)

The volume of water in common well casing diameters may be calculated as follows:

2-inch diameter well:
0.163 gal/ft x ___ (linear feet of water) = gallons

4-inch diameter well:
0.653 gal/ft x ___ (linear feet of water) = gallons

6-inch diameter well:
1.469 gal/ft x ___ (linear feet of water) = gallons

9. Attach tubing, support cable or rope, and air line (if applicable) to the pump. The support line should bear the weight of the pump. The pump/hose assembly should be lowered into the top of the standing water column and not deep into the column. No more than three to five feet of hose should be lowered into the water column. If the recovery rate of the well is faster than the pump rate and no observable draw down occurs, the pump should be raised until the intake is within one foot of the top of the water column for the duration of purging. If the pump rate exceeds the recovery rate of the well, the pump will have to be lowered, as needed, to accommodate the drawdown.

10. If a RediFlo or other similar electric submersible pump is to be used in a large diameter well (greater than 4 inches), a pump shroud should be used to direct the flow of water across the pump motor. Failure to use a shroud in this situation can lead to overheating of the motor and loss of volatiles from the pump discharge.

11. If a bailer is being used, it should be removed from its protective covering and attached to a cord compatible with the site contaminants. The bailer should be lowered into the top of the water column, allowed to fill, and removed. It is critical that bailers be slowly and gently immersed into the top of the water column, particularly during final stages of purging, to minimize turbidity and disturbance of volatile organic constituents. The use of bailers for purging and sampling is discouraged because the correct technique is highly operator dependent and improper use may result in an unrepresentative sample.

12. Field parameters including pH, ORP, turbidity, dissolved oxygen, specific conductance, and temperature are measured and recorded in the field logbook. The water quality probes are inserted into a flow-through cell. The purged groundwater is directed through the cell by connecting the pump discharge tubing to the bottom port on the flow through cell, allowing measurements to be collected before the water contacts the atmosphere.

13. During purging, the water quality parameters are measured at least once for each well volume. A minimum of three well volumes must be purged (up to 5 well volumes may be purged if water quality parameters do not stabilize) prior to sampling. In nonproductive wells, if the well is purged dry it is <u>not necessary to remove a minimum of three well volumes</u>; however, the well should be allowed to recover sufficiently to allow collection of all samples.

14. Water quality parameters are considered stable when the temperature is constant, pH measurements agree within 0.1 units, specific conductance measurements agree within 10 percent, , and turbidity measurements are less than 10 NTU or agree within 10 percent.

B. Sample Collection

Once purging is complete the well is ready to sample. The elapsed time between completion of purging and collection of the groundwater sample should be minimized. Typically, the sample is collected immediately after the well has been purged, but this is also dependent on well recovery.

Samples will be placed in sample containers that have been cleaned to laboratory standards and are preserved in accordance with the analytical method. The containers are typically pre-preserved, if required.

The steps to be followed for sample collection are as follows:

1. The cap is removed from the sample bottle, and the bottle is tilted slightly.

2. The sample is slowly poured from the bailer or discharged from the pump so that it runs down the inside of the sample bottle with a minimum of disturbance. The pumping rate should be reduced to approximately 100 ml per minute when sampling VOCs.

3. Inorganics, including metals, may be collected and preserved in the filtered form as well as the unfiltered form. Disposable in-line filters (0.45 micron filter), connected to the end of the sample tubing, are typically used for field filtration. Samples are field filtered as the water is being placed into the sample container. If a bailer is used, filtration may be driven by a peristaltic pump.

4. Adequate space is left in the bottle to allow for expansion, except for VOC vials, which are filled to the top with a positive meniscus.

5. The bottle is capped and clearly labeled.

6. Samples are placed in appropriate containers and, if necessary, packed with ice in coolers as soon as practical.

7. If the sample tubing or bailer is dedicated, it is returned to the well and the well is capped and locked. Nondedicated equipment is cleaned and decontaminated in accordance with the *Decontamination of Personnel and Equipment* SOP.

The following information, at a minimum, will be recorded in the log book:

1. Sample identification (site name, location, and project number; sample name/number and location; sample type and matrix; time and date; sampler's identity)

2. Sample source and source description

3. Field observations and measurements (appearance, volatile screening, field chemistry, sampling method), volume of water purged prior to sampling, number of well volumes purged, and field parameter measurements

4. Sample disposition (preservative; laboratory name, date and time sent; laboratory sample number, chain-of-custody number, sample bottle lot number)

5. Additional remarks

Special Conditions for Sampling with Peristaltic Pumps
It is not acceptable to collect samples for organic compounds analyses through the flexible tubing used in the pump head. When collecting samples for organic compound analyses it is necessary to use a vacuum container, placed between the pump and the well for sample collection.

The following step-by-step procedures describe the process of sampling with a peristaltic pump and vacuum jug (see note following these procedures for collection of VOC samples):

1. Disconnect the purge tubing from the pump. Make sure the tubing is securely attached to the protective casing or other secure object.

2. Insert the tubing into one of the ferrule nut fittings of a Teflon® vacuum container transfer cap assembly.

3. Place a suitable length of Teflon® tubing between the remaining transfer cap assembly ferrule nut fitting and the vacuum side of the flexible tubing in the peristaltic pump head. Securely hand-tighten both fittings.
4. Turn the pump on. Water should begin to collect in the transfer container (typically a 1-liter "Boston round" glass sample container) within a few minutes. If water does not begin to flow into the container within several minutes, check the transfer cap fittings and make sure the assembly is tightly attached to the container. It may be necessary to tighten the ferrule nuts with a wrench or pliers to achieve a vacuum in the system, particularly when approaching the maximum head difference between the pump and water table (limit of suction).
5. When the transfer container is nearly full, turn off the pump, remove the transfer cap assembly, and pour the sample into the appropriate containers.
6. If additional sample volume is needed, replace the transfer cap assembly, turn the pump on, and collect additional volume.

NOTE: Samples for volatile organic compound analyses cannot be collected using the vacuum jug method. If samples for VOC analyses are required, they must be collected with a bailer or by other approved methods, such as the "soda straw" method. The "soda straw" method involves allowing the tubing to fill, by either lowering it into the water column (A) or by filling it via suction applied by the pump head (B). If method (A) is used, the tubing is removed from the well after filling and the captured sample is allowed to drain into the sample vial. If method (B) is used, after running the pump and filling the tubing with sample, the pump speed is reduced and the direction reversed to push the sample out of the tubing into the vials. Avoid completely emptying the tubing when filling the sample vials when using method (B) to prevent introducing water that was in contact with the flexible pump head tubing. Either method is repeated, as necessary, until all vials are filled.

Samples for some constituents, primarily inorganic analytes such as metals and cyanide, may be collected directly from the peristaltic pump head tubing. This method is acceptable under the following conditions:

- The pump head tubing must be changed between sampling locations;
- An equipment rinsate blank must be collected by pumping de-ionized water through a piece of the tubing.

IV. Attachments

None.

V. Key Checks and Preventative Maintenance

- Use of peristaltic pumps and bailers should be avoided, if possible.
- Allow the field parameters to stabilize within the specified criteria as much as possible.
- Fill bottles for VOC samples first.
- Be sure the sample identification is properly specified.
- Maintain field equipment in accordance with the manufacturer's recommendations. This may include, but is not limited to:
  - Inspect sampling pump regularly and replace as warranted
  - Bring supplies for replacing the bladder and "O" rings if using a positive-displacement bladder pump
  - Inspect tubing regularly and replace as warranted
  - Inspect air/sample line quick-connects regularly and replace as warranted
  - Verify battery charge, calibration, and proper working order of field measurement equipment prior to initial mobilization and daily during field efforts

STANDARD OPERATING PROCEDURE

General Guidance for Monitoring Well Installation

I. Purpose

To provide site personnel with a review of the well installation procedures that will be performed. These procedures are to be considered general guidelines only and are in no way intended to supplement or replace the contractual specifications in the driller's subcontract.

II. Scope

Monitoring well installations are planned for shallow and/or deep unconsolidated aquifers and/or for bedrock aquifers. The SOPs *Installation of Shallow Monitoring Wells, Installation of Surface-Cased Monitoring Wells, Installation of Bedrock Monitoring Wells,* and *Installation of Monitoring Wells Using Sonic Drilling* provide more specifics.

III. Equipment and Materials

1. Drilling rig (hollow stem auger, sonic, air hammer, air rotary, or mud rotary)
2. Well-construction materials (i.e., surface casing, screens, riser, casing, caps, bottom plugs, centering guides, sand, bentonite, grout, and surface-finish materials)
3. Development equipment

IV. Procedures and Guidelines

1. Wells will be installed in accordance with standard EPA procedures. Note that USEPA Region III requires any well penetrating a confining layer to be double-cased.
2. The threaded connections will be water-tight.
3. Well screens generally will be constructed of 10-slot or 20-slot Schedule 40 PVC and will be 5 to 10 feet in length depending on saturated thickness of unconsolidated sediments. The exact slot size and length will be determined by the field team supervisor. Stainless steel may be required under certain contaminant conditions.
4. Stick-up wells will be surrounded by four concrete-filled guard posts at least 2 inches in diameter.

5. A record of the finished well construction will be compiled.

6. All soils and liquids generated during well installations will be drummed for proper disposal.

Monitoring Well Installation

- 2″ monitoring wells in unconsolidated materials will be installed in at least 6-inch-diameter boreholes to accommodate well completion materials in designated locations.

- All monitoring wells penetrating a confining layer will be surface-cased from the ground surface to approximately 5 feet into the confining layer. Exceptions to this may be allowed under certain circumstances (e.g., evidence of significant natural gaps in the confining layer).

- Monitoring wells in unconsolidated materials will be constructed of 2-inch-diameter, factory manufactured, flush-jointed, Schedule 40 PVC (or stainless steel) screen with threaded bottom plug and riser.

- Screens will be filter packed with a properly sized and graded, thoroughly washed, sound, durable, well-rounded basalt or siliceous sand. When using hollow-stem augers, the filter pack will be installed by slowly pouring the sand into the annular space while simultaneously raising the augers and using a weighted tape to sound for the sand surface. For rotary-drilled wells, the height of the sand pack also will be sounded with a weighted tape.

- The primary filter sand pack (typically Morie #00 or DSI #1 for a 10-slot screen) will extend from 1 to 2 feet below the base to 2 feet above the top of the screen; filter pack will be allowed to settle before final measurement is taken. For wells deeper than 30 feet, the filter pack will be placed using a tremie pipe and flowing water.

- A secondary filter sand pack (typically a fine sand seal) 1-foot thick may be placed above the primary sand pack.

- Annular well seals will consist of 2 feet of pelletized, chip, or granular bentonite clay placed above the filter pack. If necessary the pellets will be hydrated using potable water. For wells installed using hollow-stem augers, the bentonite will be poured into the annular space while slowly raising the augers and sounding for the top of the bentonite with a weighted tape. A high-solids bentonite slurry using powdered bentonite introduced with a side-discharging tremie pipe will be used for the bentonite seals in wells greater than 30 feet deep. For rotary-drilled wells, the height of the well seal also will be sounded with a weighted tape. High-solids slurries will have solids content of at least 20 percent.

- The top of the annular seal will be measured after the bentonite seal has been allowed to hydrate and before the grout is applied. The seal will be allowed to hydrate for at least 30 minutes before work in the well continues.

- The annular space above the bentonite seal will be filled to grade with a bentonite-cement slurry grout mixture.
- The grout mixture consists of 6 to 8 gallons of water per 94-pound bag of Portland cement; 3 to 6 pounds of bentonite added per bag of cement to reduce shrinkage.
- The grout mix will be carefully applied to avoid disturbing the bentonite seal; the method of grout placement must force grout from the top of the bentonite seal to ground surface.
- After allowing the grout to settle and set up overnight, additional grout will be added to maintain grade.
- A protective steel casing equipped with keyed alike locking caps will be grouted in place for each new well; the casing will extend at least 2 feet above grade and 3 feet below grade, and will be painted a bright color.

Well Development

- New monitoring wells will be developed after the well has been completely installed and the grout has hardened (at least 24 hours)
- The well will be developed by surging and pumping.
- Equipment placed in the well will be decontaminated before use.
- If information is available, begin developing in the least-contaminated well first.
- Development will include surging the well by either abruptly stopping flow and allowing water in the well column to fall back into the well or through the use of a surge block that is slightly smaller in diameter than the well casing inner diameter.
- Pipes and pumps must not be fitted with foot valves or other devices that might inhibit the return flow of water to the well.
- Surging should continue throughout the development process.
- The air-lift method may be used to pump materials out of the well. The air compressor will be fitted with filters to remove all oil and the air lift hose used will be made of inert materials.
- Well development will continue until the water produced is free of turbidity, sand, and silt. A Horiba-U22 meter, YSI meter with separate Hanna turbidity meter, or equivalent should be used to determine when the turbidity is low and parameters have stabilized.
- Development water will be considered hazardous and placed in sealed 55-gallon U.S. DOT approved steel drums. CH2M HILL will label and date the drums as pending analysis, and transport the drums to a designated site for storage.

V. Attachments

None.

VI. Key Check and Items

- Ensure that all equipment is properly decontaminated as needed.
- Only new, sealed materials (e.g., screens, risers, and sand) will be used in constructing the well.
- Care shall be taken when making downhole measurements to ensure that proper heights of sand, seal, and grout are achieved.

STANDARD OPERATING PROCEDURE

Logging of Soil Borings

I. Purpose and Scope

This SOP provides guidance to obtain accurate and consistent descriptions of soil characteristics during soil-sampling operations. The characterization is based on visual examination and manual tests, not on laboratory determinations.

II. Equipment and Materials

- Indelible pens
- Tape measure or ruler
- Field logbook
- Spatula
- HCL, 10 percent solution
- Squirt bottle with water
- Rock- or soil-color chart (e.g., Munsell)
- Grain-size chart
- Hand lens
- Unified Soil Classification System (USCS) index charts and tables to help with soil classification (attached)

III. Procedures and Guidelines

This section covers several aspects of soil characterization: instructions for completing the CH2M HILL soil boring log Form D1586 (attached), field classification of soil, and standard penetration test procedures.

A. Instructions for Completing Soil Boring Logs

Soil boring logs will be completed in the field log books or on separate soil boring log sheets. Information collected will be consistent with that required for Form D1586 (attached), a standard CH2M HILL form (attached), or an equivalent form that supplies the same information.

The information collected in the field to perform the soil characterization is described below.

Field personnel should review completed logs for accuracy, clarity, and thoroughness of detail. Samples also should be checked to see that information is correctly recorded on both jar lids and labels and on the log sheets.

B. Heading Information

Boring/Well Number. Enter the boring/well number. A numbering system should be chosen that does not conflict with information recorded for previous exploratory work done at the site. Number the sheets consecutively for each boring.

Location. If station, coordinates, mileposts, or similar project layout information is available, indicate the position of the boring to that system using modifiers such as "approximate" or "estimated" as appropriate.

Elevation. Elevation will be determined at the conclusion of field activities through a survey.

Drilling Contractor. Enter the name of the drilling company and the city and state where the company is based.

Drilling Method and Equipment. Identify the bit size and type, drilling fluid (if used), and method of drilling (e.g., rotary, hollow-stem auger). Information on the drilling equipment (e.g., CME 55, Mobile B61) also is noted.

Water Level and Date. Enter the depth below ground surface to the apparent water level in the borehole. The information should be recorded as a comment. If free water is not encountered during drilling or cannot be detected because of the drilling method, this information should be noted. Record date and time of day (for tides, river stage) of each water level measurement.

Date of Start and Finish. Enter the dates the boring was begun and completed. Time of day should be added if several borings are performed on the same day.

Logger. Enter the first and last name.

C. Technical Data

Depth Below Surface. Use a depth scale that is appropriate for the sample spacing and for the complexity of subsurface conditions.

Sample Interval. Note the depth at the top and bottom of the sample interval.

Sample Type and Number. Enter the sample type and number. SS-1 = split spoon, first sample. Number samples consecutively regardless of type. Enter a sample number even if no material was recovered in the sampler.

Sample Recovery. Enter the length to the nearest 0.1-foot of soil sample recovered from the sampler. Often, there will be some wash or caved material above the sample; do not include the wash material in the measurement. Record soil recovery in feet.

Standard Penetration Test Results. In this column, enter the number of blows required for each 6 inches of sampler penetration and the "N" value, which is the sum of the blows in the middle two 6-inch penetration intervals. A typical standard penetration test involving successive blow counts of 2, 3, 4, and 5 is recorded as 2-3-4-5 and (7). The standard penetration test is terminated if the sampler encounters refusal. Refusal is a penetration of less than 6 inches with a blow count of 50. A

partial penetration of 50 blows for 4 inches is recorded as 50/4 inches. Penetration by the weight of the slide hammer only is recorded as "WOH."

Samples should be collected using a 140-pound hammer and 2-inch diameter split spoons. Samples may be collected using direct push sampling equipment. However, blow counts will not be available. A pocket penetrometer may be used instead to determine relative soil density of fine grained materials (silts and clays).

Sample also may be collected using a 300-pound hammer or 3-inch-diameter split-spoon samples at the site. However, use of either of these sample collection devices invalidates standard penetration test results and should be noted in the comments section of the log. The 300-pound hammer should only be used for collection of 3-inch-diameter split-spoon samples. Blow counts should be recorded for collection of samples using either a 3-inch split-spoon, or a 300-pound hammer. An "N" value need not be calculated.

Soil Description. The soil classification should follow the format described in the "Field Classification of Soil" subsection below.

Comments. Include all pertinent observations (changes in drilling fluid color, rod drops, drilling chatter, rod bounce as in driving on a cobble, damaged Shelby tubes, and equipment malfunctions). In addition, note if casing was used, the sizes and depths installed, and if drilling fluid was added or changed. You should instruct the driller to alert you to any significant changes in drilling (changes in material, occurrence of boulders, and loss of drilling fluid). Such information should be attributed to the driller and recorded in this column.

Specific information might include the following:

- The date and the time drilling began and ended each day
- The depth and size of casing and the method of installation
- The date, time, and depth of water level measurements
- Depth of rod chatter
- Depth and percentage of drilling fluid loss
- Depth of hole caving or heaving
- Depth of change in material
- Health and safety monitoring data
- Drilling interval through a boulder

D. Field Classification of Soil

This section presents the format for the field classification of soil. In general, the approach and format for classifying soils should conform to ASTM D 2488, Visual-Manual Procedure for Description and Identification of Soils (attached).

The Unified Soil Classification System is based on numerical values of certain soil properties that are measured by laboratory tests. It is possible, however, to estimate these values in the field with reasonable accuracy using visual-manual procedures (ASTM D 2488). In addition, some elements of a complete soil

description, such as the presence of cobbles or boulders, changes in strata, and the relative proportions of soil types in a bedded deposit, can be obtained only in the field.

Soil descriptions should be precise and comprehensive without being verbose. The correct overall impression of the soil should not be distorted by excessive emphasis on insignificant details. In general, similarities rather than differences between consecutive samples should be stressed.

Soil descriptions must be recorded for every soil sample collected. The format and order for soil descriptions should be as follows:

1. Soil name (synonymous with ASTM D 2488 Group Name) with appropriate modifiers. Soil name should be in all capitals in the log, for example "POORLY-GRADED SAND."

2. Group symbol, in parentheses, for example, "(SP)."

3. Color, using Munsell color designation

4. Moisture content

5. Relative density or consistency

6. Soil structure, mineralogy, or other descriptors

This order follows, in general, the format described in ASTM D 2488.

E. Soil Name

The basic name of a soil should be the ASTM D 2488 Group Name on the basis of visual estimates of gradation and plasticity. The soil name should be capitalized.

Examples of acceptable soil names are illustrated by the following descriptions:

- A soil sample is visually estimated to contain 15 percent gravel, 55 percent sand, and 30 percent fines (passing No. 200 sieve). The fines are estimated as either low or highly plastic silt. This visual classification is SILTY SAND WITH GRAVEL, with a Group Symbol of (SM).

- Another soil sample has the following visual estimate: 10 percent gravel, 30 percent sand, and 60 percent fines (passing the No. 200 sieve). The fines are estimated as low plastic silt. This visual classification is SANDY SILT. The gravel portion is not included in the soil name because the gravel portion was estimated as less than 15 percent. The Group Symbol is (ML).

The gradation of coarse-grained soil (more than 50 percent retained on No. 200 sieve) is included in the specific soil name in accordance with ASTM D 2488. There is no need to further document the gradation. However, the maximum size and angularity or roundness of gravel and sand-sized particles should be recorded. For fine-grained soil (50 percent or more passing the No. 200 sieve), the name is modified by the appropriate plasticity/elasticity term in accordance with ASTM D 2488.

Interlayered soil should each be described starting with the predominant type. An introductory name, such as "Interlayered Sand and Silt," should be used. In addition, the relative proportion of each soil type should be indicated (see Table 1 for example).

Where helpful, the evaluation of plasticity/elasticity can be justified by describing results from any of the visual-manual procedures for identifying fine-grained soils, such as reaction to shaking, toughness of a soil thread, or dry strength as described in ASTM D 2488.

F. Group Symbol

The appropriate group symbol from ASTM D 2488 must be given after each soil name. The group symbol should be placed in parentheses to indicate that the classification has been estimated.

In accordance with ASTM D 2488, dual symbols (e.g., GP-GM or SW-SC) can be used to indicate that a soil is estimated to have about 10 percent fines. Borderline symbols (e.g., GM/SM or SW/SP) can be used to indicate that a soil sample has been identified as having properties that do not distinctly place the soil into a specific group. Generally, the group name assigned to a soil with a borderline symbol should be the group name for the first symbol. The use of a borderline symbol should not be used indiscriminately. Every effort should be made to first place the soil into a single group.

G. Color

The color of a soil must be given. The color description should be based on the Munsell system. The color name and the hue, value, and chroma should be given.

H. Moisture Content

The degree of moisture present in a soil sample should be defined as dry, moist, or wet. Moisture content can be estimated from the criteria listed on Table 2.

I. Relative Density or Consistency

Relative density of a coarse-grained (cohesionless) soil is based on N-values (ASTM D 1586 [attached]). If the presence of large gravel, disturbance of the sample, or non-standard sample collection makes determination of the in situ relative density or consistency difficult, then this item should be left out of the description and explained in the Comments column of the soil boring log.

Consistency of fine-grained (cohesive) soil is properly based on results of pocket penetrometer or torvane results. In the absence of this information, consistency can be estimated from N-values. Relationships for determining relative density or consistency of soil samples are given in Tables 3 and 4.

J. Soil Structure, Mineralogy, and Other Descriptors

Discontinuities and inclusions are important and should be described. Such features include joints or fissures, slickensides, bedding or laminations, veins, root holes, and wood debris.

Significant mineralogical information such as cementation, abundant mica, or unusual mineralogy should be described.

Other descriptors may include particle size range or percentages, particle angularity or shape, maximum particle size, hardness of large particles, plasticity of fines, dry strength, dilatancy, toughness, reaction to HCl, and staining, as well as other information such as organic debris, odor, or presence of free product.

K. Equipment and Calibration

Before starting the testing, the equipment should be inspected for compliance with the requirements of ASTM D 1586. The split-barrel sampler should measure 2-inch or 3-inch O.D., and should have a split tube at least 18 inches long. The minimum size sampler rod allowed is "A" rod (1-5/8-inch O.D.). A stiffer rod, such as an "N" rod (2-5/8-inch O.D.), is required for depths greater than 50 feet. The drive weight assembly should consist of a 140-pound or 300-pound hammer weight, a drive head, and a hammer guide that permits a free fall of 30 inches.

IV. Attachments

Soil Boring Log (Sample Soil Boring Log.xls)

CH2M HILL Form D1586 and a completed example (Soil_Log_Examp.pdf)

ASTM D 2488 *Standard Practice for Description and Identification of Soils (Visual-Manual Procedures)* (ASTM D2488.pdf)

ASTM 1586 *Standard Test Method for Penetration Test and Split-Barrel Sampling of Soils* (ASTM D1586.pdf)

Tables 1 through 4 (Tables 1-4.pdf)

V. Key Checks and Preventive Maintenance

- Check entries to the soil-boring log and field logbook in the field; because the samples will be disposed of at the end of fieldwork, confirmation and corrections cannot be made later.
- Check that sample numbers and intervals are properly specified.
- Check that drilling and sampling equipment is decontaminated using the procedures defined in SOP *Decontamination of Drilling Rigs and Equipment*.

CH2MHILL

PROJECT NUMBER	BORING NUMBER

SOIL BORING LOG

PROJECT : LOCATION :

ELEVATION : DRILLING CONTRACTOR :

DRILLING METHOD AND EQUIPMENT USED :

ATD WATER LEVEL : START : END : LOGGER :

DEPTH BELOW SURFACE (FT)	INTERVAL (FT)	RECOVERY (FT)	SAMPLE #/TYPE	STANDARD PENETRATION TEST RESULTS 6"-6"-6"-6" (N')	SOIL DESCRIPTION SOIL NAME, USCS GROUP SYMBOL, COLOR, MOISTURE CONTENT, RELATIVE DENSITY, OR CONSISTENCY, SOIL STRUCTURE, MINERALOGY.	USCS	COMMENTS DEPTH OF CASING, DRILLING RATE, DRILLING FLUID LOSS, TESTS, AND INSTRUMENTATION. DRILLING ACTIONS/DRILLER COMMENTS PID Readings: Breathing Zone: Above Hole:

PROJECT NUMBER	BORING NUMBER SHEET OF

SOIL BORING LOG

PROJECT _____ LOCATION _____

ELEVATION _____ DRILLING CONTRACTOR _____

DRILLING METHOD AND EQUIPMENT _____

WATER LEVELS _____ START _____ FINISH _____ LOGGER _____

DEPTH BELOW SURFACE (FT)	SAMPLE			STANDARD PENETRATION TEST RESULTS	SOIL DESCRIPTION	COMMENTS
	INTERVAL	NUMBER AND TYPE	RECOVERY (FT)	6"-6"-6" (N)	SOIL NAME, USCS GROUP SYMBOL, COLOR, MOISTURE CONTENT, RELATIVE DENSITY OR CONSISTENCY, SOIL STRUCTURE, MINERALOGY	DEPTH OF CASING, DRILLING RATE, DRILLING FLUID LOSS, TESTS AND INSTRUMENTATION

Figure 1
SOIL BORING LOG, FORM D1586

CH2M HILL

PROJECT NUMBER	BORING NUMBER	
DEN 22371.G5	BL-3	SHEET 1 OF 3

SOIL BORING LOG

PROJECT Howard Ave Landslide LOCATION Howard & 24th Ave, Centennial, CO
ELEVATION 5136 Feet DRILLING CONTRACTOR Kendall Explorations, Ashcan, Colorado
DRILLING METHOD AND EQUIPMENT 4"-inch H.S. Augers, Mobil B-61 rotary drill rig
WATER LEVELS 3.2 Feet, 8/5/89 START August 4, 1989 FINISH August 8, 1989 LOGGER J.A. Michner

DEPTH BELOW SURFACE (FT)	SAMPLE INTERVAL	SAMPLE NUMBER AND TYPE	SAMPLE RECOVERY (FT)	STANDARD PENETRATION TEST RESULTS 6"-6"-6" (N)	SOIL DESCRIPTION: SOIL NAME, USCS GROUP SYMBOL, COLOR, MOISTURE CONTENT, RELATIVE DENSITY OR CONSISTENCY, SOIL STRUCTURE, MINERALOGY	COMMENTS: DEPTH OF CASING, DRILLING RATE, DRILLING FLUID LOSS, TESTS AND INSTRUMENTATION
0					Surface material consist of 4 inches AC underlain by 6 inches of 3/4 inch minus base rock	Start Drilling @ 3:00
	2.5					
	4.0	1-S	1.5	2-3-4 (7)	POORLY-GRADED SAND WITH SILT, (SP-SM), fine, light brown, wet, loose	
	5.0					Driller notes water at 4 feet
5						Driller notes very soft drilling 4 ft. dark grey, wet silty cuttings.
	6.5	2-S	0.9	WOH/12"-1	ORGANIC SILT, (OL), very dark, gray to black, wet, very soft, strong H_2S odor, many fine roots up to about 1/4 inch	
	8.0					
	10.0	3-ST	1.3	—	ORGANIC SILT, similar to 2-S, except includes fewer roots (by volume)	
10	11.5	4-S	1.3	2-2-2 (4)	SILT, (ML), very dark gray to black, wet, soft	
						water level @ 3.2 feet on 8/5/89 @ 0730
						Driller notes rough drilling action and chatter @ 13 ft
	15.0					
15	15.5	5-S	0.5	60/6"	SILTY GRAVEL, (GM), rounded gravel up to about 1 inch maximum observed size, wet, very dense	
	20.0					Driller notes smoother, firm drilling @ 19 ft
20	21.0	6-S	1.0	12-50/6"	LEAN CLAY WITH SAND, (CL), medium to light green, moist, very stiff	some angular rock chips @ bot. tip of 6-S, poss boulders or rock
	23.0					Driller notes very hard, slow grinding, smooth drilling action from 21 to 23 ft, possibly bedrock
	23.1	7-S	0	50/1"	NO RECOVERY	
					END SOIL BORING @ 23.1 FEET SEE ROCK CORE LOG FOR CONTINUATION OF BL-3	

Figure 2
EXAMPLE OF COMPLETED LOG FORM

Designation: D 2488 – 00

Standard Practice for Description and Identification of Soils (Visual-Manual Procedure)[1]

This standard is issued under the fixed designation D 2488; the number immediately following the designation indicates the year of original adoption or, in the case of revision, the year of last revision. A number in parentheses indicates the year of last reapproval. A superscript epsilon (ϵ) indicates an editorial change since the last revision or reapproval.

This standard has been approved for use by agencies of the Department of Defense.

1. Scope *

1.1 This practice covers procedures for the description of soils for engineering purposes.

1.2 This practice also describes a procedure for identifying soils, at the option of the user, based on the classification system described in Test Method D 2487. The identification is based on visual examination and manual tests. It must be clearly stated in reporting an identification that it is based on visual-manual procedures.

1.2.1 When precise classification of soils for engineering purposes is required, the procedures prescribed in Test Method D 2487 shall be used.

1.2.2 In this practice, the identification portion assigning a group symbol and name is limited to soil particles smaller than 3 in. (75 mm).

1.2.3 The identification portion of this practice is limited to naturally occurring soils (disturbed and undisturbed).

NOTE 1—This practice may be used as a descriptive system applied to such materials as shale, claystone, shells, crushed rock, etc. (see Appendix X2).

1.3 The descriptive information in this practice may be used with other soil classification systems or for materials other than naturally occurring soils.

1.4 The values stated in inch-pound units are to be regarded as the standard.

1.5 *This standard does not purport to address all of the safety problems, if any, associated with its use. It is the responsibility of the user of this standard to establish appropriate safety and health practices and determine the applicability of regulatory limitations prior to use.* For specific precautionary statements see Section 8.

1.6 *This practice offers a set of instructions for performing one or more specific operations. This document cannot replace education or experience and should be used in conjunction with professional judgment. Not all aspects of this practice may be applicable in all circumstances. This ASTM standard is not intended to represent or replace the standard of care by which the adequacy of a given professional service must be judged, nor should this document be applied without consideration of a project's many unique aspects. The word "Standard" in the title of this document means only that the document has been approved through the ASTM consensus process.*

2. Referenced Documents

2.1 *ASTM Standards:*

D 653 Terminology Relating to Soil, Rock, and Contained Fluids[2]

D 1452 Practice for Soil Investigation and Sampling by Auger Borings[2]

D 1586 Test Method for Penetration Test and Split-Barrel Sampling of Soils[2]

D 1587 Practice for Thin-Walled Tube Sampling of Soils[2]

D 2113 Practice for Diamond Core Drilling for Site Investigation[2]

D 2487 Classification of Soils for Engineering Purposes (Unified Soil Classification System)[2]

D 3740 Practice for Minimum Requirements for Agencies Engaged in the Testing and/or Inspection of Soil and rock as Used in Engineering Design and Construction[3]

D 4083 Practice for Description of Frozen Soils (Visual-Manual Procedure)[2]

3. Terminology

3.1 *Definitions*—Except as listed below, all definitions are in accordance with Terminology D 653.

NOTE 2—For particles retained on a 3-in. (75-mm) US standard sieve, the following definitions are suggested:
Cobbles—particles of rock that will pass a 12-in. (300-mm) square opening and be retained on a 3-in. (75-mm) sieve, and
Boulders—particles of rock that will not pass a 12-in. (300-mm) square opening.

3.1.1 *clay*—soil passing a No. 200 (75-µm) sieve that can be made to exhibit plasticity (putty-like properties) within a range of water contents, and that exhibits considerable strength when air-dry. For classification, a clay is a fine-grained soil, or the fine-grained portion of a soil, with a plasticity index equal to or greater than 4, and the plot of plasticity index versus liquid

[1] This practice is under the jurisdiction of ASTM Committee D-18 on Soil and Rock and is the direct responsibility of Subcommittee D18.07 on Identification and Classification of Soils.

Current edition approved Feb. 10, 2000. Published May 2000. Originally published as D 2488 – 66 T. Last previous edition D 2488 – 93*[1].

[2] *Annual Book of ASTM Standards*, Vol 04.08.

[3] *Annual Book of ASTM Standards*, Vol 04.09.

***A Summary of Changes section appears at the end of this standard.**

Copyright © ASTM, 100 Barr Harbor Drive, West Conshohocken, PA 19428-2959, United States.

Copyright ASTM International
Reproduced by IHS under license with ASTM
No reproduction or networking permitted without license from IHS

Licensee=CH2M Hill/5960458001, User=Carter, Lisa
Not for Resale, 08/04/2005 08:22:59 MDT

limit falls on or above the "A" line (see Fig. 3 of Test Method D 2487).

3.1.2 *gravel*—particles of rock that will pass a 3-in. (75-mm) sieve and be retained on a No. 4 (4.75-mm) sieve with the following subdivisions:

coarse—passes a 3-in. (75-mm) sieve and is retained on a ¾-in. (19-mm) sieve.

fine—passes a ¾-in. (19-mm) sieve and is retained on a No. 4 (4.75-mm) sieve.

3.1.3 *organic clay*—a clay with sufficient organic content to influence the soil properties. For classification, an organic clay is a soil that would be classified as a clay, except that its liquid limit value after oven drying is less than 75 % of its liquid limit value before oven drying.

3.1.4 *organic silt*—a silt with sufficient organic content to influence the soil properties. For classification, an organic silt is a soil that would be classified as a silt except that its liquid limit value after oven drying is less than 75 % of its liquid limit value before oven drying.

3.1.5 *peat*—a soil composed primarily of vegetable tissue in various stages of decomposition usually with an organic odor, a dark brown to black color, a spongy consistency, and a texture ranging from fibrous to amorphous.

3.1.6 *sand*—particles of rock that will pass a No. 4 (4.75-mm) sieve and be retained on a No. 200 (75-µm) sieve with the following subdivisions:

coarse—passes a No. 4 (4.75-mm) sieve and is retained on a No. 10 (2.00-mm) sieve.

medium—passes a No. 10 (2.00-mm) sieve and is retained on a No. 40 (425-µm) sieve.

fine—passes a No. 40 (425-µm) sieve and is retained on a No. 200 (75-µm) sieve.

3.1.7 *silt*—soil passing a No. 200 (75-µm) sieve that is nonplastic or very slightly plastic and that exhibits little or no strength when air dry. For classification, a silt is a fine-grained soil, or the fine-grained portion of a soil, with a plasticity index less than 4, or the plot of plasticity index versus liquid limit falls below the "A" line (see Fig. 3 of Test Method D 2487).

4. Summary of Practice

4.1 Using visual examination and simple manual tests, this practice gives standardized criteria and procedures for describing and identifying soils.

4.2 The soil can be given an identification by assigning a group symbol(s) and name. The flow charts, Fig. 1a and Fig. 1b for fine-grained soils, and Fig. 2, for coarse-grained soils, can be used to assign the appropriate group symbol(s) and name. If the soil has properties which do not distinctly place it into a specific group, borderline symbols may be used, see Appendix X3.

NOTE 3—It is suggested that a distinction be made between *dual symbols* and *borderline symbols*.

Dual Symbol—A dual symbol is two symbols separated by a hyphen, for example, GP-GM, SW-SC, CL-ML used to indicate that the soil has been identified as having the properties of a classification in accordance with Test Method D 2487 where two symbols are required. Two symbols are required when the soil has between 5 and 12 % fines or when the liquid limit and plasticity index values plot in the CL-ML area of the plasticity chart.

Borderline Symbol—A borderline symbol is two symbols separated by a slash, for example, CL/CH, GM/SM, CL/ML. A borderline symbol should be used to indicate that the soil has been identified as having properties that do not distinctly place the soil into a specific group (see Appendix X3).

5. Significance and Use

5.1 The descriptive information required in this practice can be used to describe a soil to aid in the evaluation of its significant properties for engineering use.

5.2 The descriptive information required in this practice should be used to supplement the classification of a soil as determined by Test Method D 2487.

5.3 This practice may be used in identifying soils using the classification group symbols and names as prescribed in Test Method D 2487. Since the names and symbols used in this practice to identify the soils are the same as those used in Test Method D 2487, it shall be clearly stated in reports and all other appropriate documents, that the classification symbol and name are based on visual-manual procedures.

5.4 This practice is to be used not only for identification of soils in the field, but also in the office, laboratory, or wherever soil samples are inspected and described.

5.5 This practice has particular value in grouping similar soil samples so that only a minimum number of laboratory tests need be run for positive soil classification.

NOTE 4—The ability to describe and identify soils correctly is learned more readily under the guidance of experienced personnel, but it may also be acquired systematically by comparing numerical laboratory test results for typical soils of each type with their visual and manual characteristics.

5.6 When describing and identifying soil samples from a given boring, test pit, or group of borings or pits, it is not necessary to follow all of the procedures in this practice for every sample. Soils which appear to be similar can be grouped together; one sample completely described and identified with the others referred to as similar based on performing only a few of the descriptive and identification procedures described in this practice.

5.7 This practice may be used in combination with Practice D 4083 when working with frozen soils.

NOTE 5—Notwithstanding the statements on precision and bias contained in this standard: The precision of this test method is dependent on the competence of the personnel performing it and the suitability of the equipment and facilities used. Agencies that meet the criteria of Practice D 3740 are generally considered capable of competent and objective testing. Users of this test method are cautioned that compliance with Practice D 3740 does not in itself assure reliable testing. Reliable testing depends on several factors; Practice D 3740 provides a means for evaluating some of those factors.

6. Apparatus

6.1 *Required Apparatus*:

6.1.1 *Pocket Knife or Small Spatula*.

6.2 *Useful Auxiliary Apparatus*:

6.2.1 *Small Test Tube and Stopper* (or jar with a lid).

6.2.2 *Small Hand Lens*.

7. Reagents

7.1 *Purity of Water*—Unless otherwise indicated, references to water shall be understood to mean water from a city water

Copyright ASTM International
Reproduced by IHS under license with ASTM
No reproduction or networking permitted without license from IHS

Licensee=CH2M Hill/5960458001, User=Carter, Lisa
Not for Resale, 08/04/2005 08:22:59 MDT

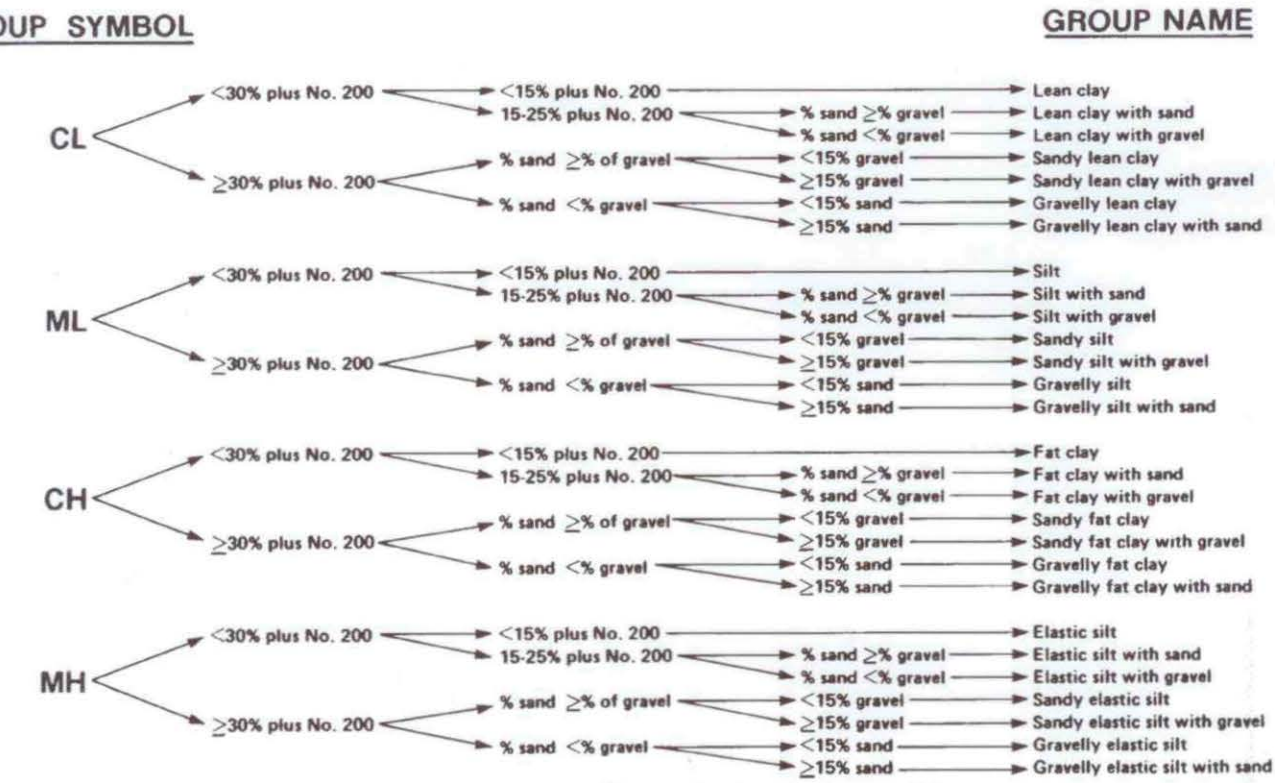

NOTE 1—Percentages are based on estimating amounts of fines, sand, and gravel to the nearest 5 %.

FIG. 1a Flow Chart for Identifying Inorganic Fine-Grained Soil (50 % or more fines)

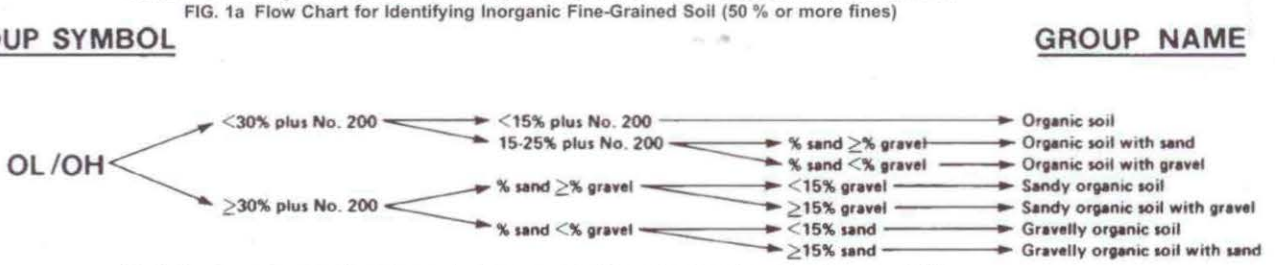

NOTE 1—Percentages are based on estimating amounts of fines, sand, and gravel to the nearest 5 %.

FIG. 1 b Flow Chart for Identifying Organic Fine-Grained Soil (50 % or more fines)

supply or natural source, including non-potable water.

7.2 *Hydrochloric Acid*—A small bottle of dilute hydrochloric acid, HCl, one part HCl (10 *N*) to three parts water (This reagent is optional for use with this practice). See Section 8.

8. Safety Precautions

8.1 When preparing the dilute HCl solution of one part concentrated hydrochloric acid (10 *N*) to three parts of distilled water, slowly add acid into water following necessary safety precautions. Handle with caution and store safely. If solution comes into contact with the skin, rinse thoroughly with water.

8.2 **Caution**—Do not add water to acid.

9. Sampling

9.1 The sample shall be considered to be representative of the stratum from which it was obtained by an appropriate, accepted, or standard procedure.

NOTE 6—Preferably, the sampling procedure should be identified as having been conducted in accordance with Practices D 1452, D 1587, or D 2113, or Test Method D 1586.

9.2 The sample shall be carefully identified as to origin.

NOTE 7—Remarks as to the origin may take the form of a boring number and sample number in conjunction with a job number, a geologic stratum, a pedologic horizon or a location description with respect to a permanent monument, a grid system or a station number and offset with respect to a stated centerline and a depth or elevation.

9.3 For accurate description and identification, the minimum amount of the specimen to be examined shall be in accordance with the following schedule:

Maximum Particle Size, Sieve Opening	Minimum Specimen Size, Dry Weight
4.75 mm (No. 4)	100 g (0.25 lb)
9.5 mm (⅜ in.)	200 g (0.5 lb)
19.0 mm (¾ in.)	1.0 kg (2.2 lb)
38.1 mm (1½ in.)	8.0 kg (18 lb)
75.0 mm (3 in.)	60.0 kg (132 lb)

ght ASTM International
duced by IHS under license with ASTM
roduction or networking permitted without license from IHS
Licensee=CH2M Hill/5960458001, User=Carter, Lisa
Not for Resale, 08/04/2005 08:22:59 MDT

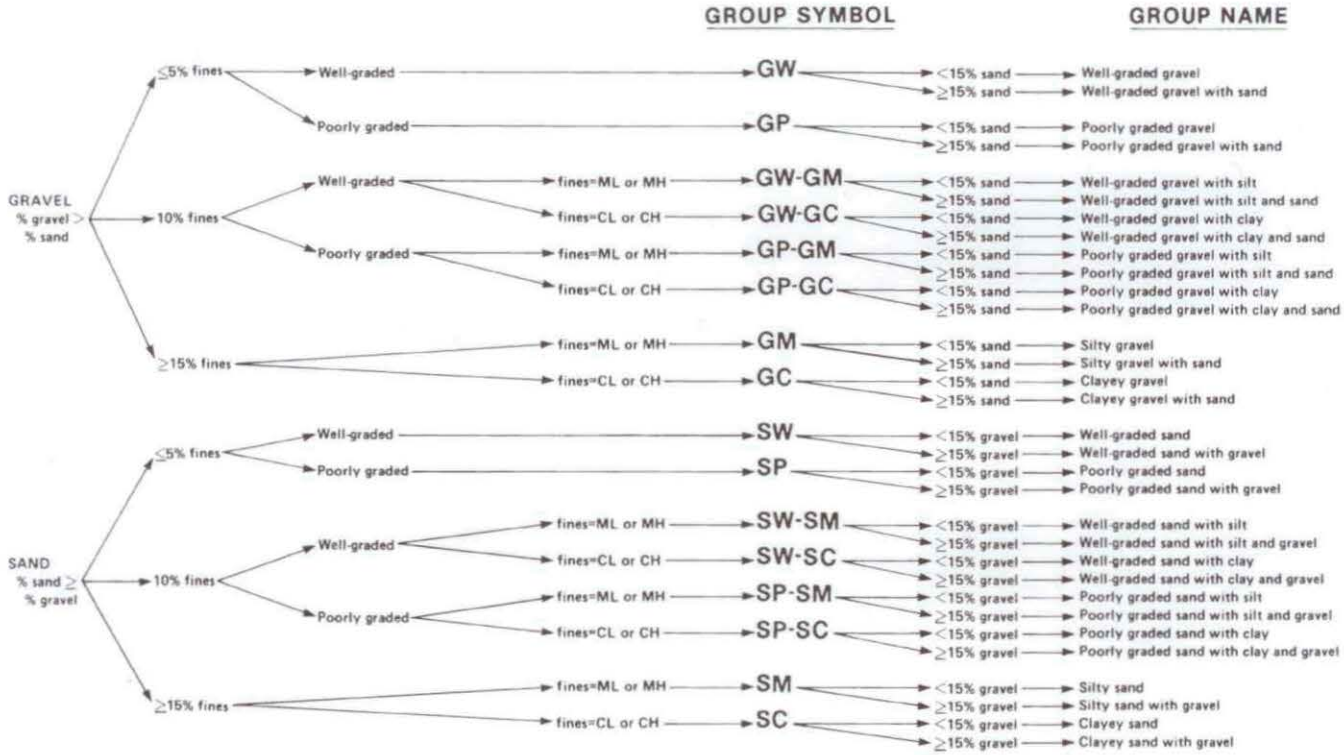

NOTE 1—Percentages are based on estimating amounts of fines, sand, and gravel to the nearest 5 %.

FIG. 2 Flow Chart for Identifying Coarse-Grained Soils (less than 50 % fines)

NOTE 8—If random isolated particles are encountered that are significantly larger than the particles in the soil matrix, the soil matrix can be accurately described and identified in accordance with the preceeding schedule.

9.4 If the field sample or specimen being examined is smaller than the minimum recommended amount, the report shall include an appropriate remark.

10. Descriptive Information for Soils

10.1 *Angularity*—Describe the angularity of the sand (coarse sizes only), gravel, cobbles, and boulders, as angular, subangular, subrounded, or rounded in accordance with the criteria in Table 1 and Fig. 3. A range of angularity may be stated, such as: subrounded to rounded.

10.2 *Shape*—Describe the shape of the gravel, cobbles, and boulders as flat, elongated, or flat and elongated if they meet the criteria in Table 2 and Fig. 4. Otherwise, do not mention the shape. Indicate the fraction of the particles that have the shape, such as: one-third of the gravel particles are flat.

TABLE 1 Criteria for Describing Angularity of Coarse-Grained Particles (see Fig. 3)

Description	Criteria
Angular	Particles have sharp edges and relatively plane sides with unpolished surfaces
Subangular	Particles are similar to angular description but have rounded edges
Subrounded	Particles have nearly plane sides but have well-rounded corners and edges
Rounded	Particles have smoothly curved sides and no edges

10.3 *Color*—Describe the color. Color is an important property in identifying organic soils, and within a given locality it may also be useful in identifying materials of similar geologic origin. If the sample contains layers or patches of varying colors, this shall be noted and all representative colors shall be described. The color shall be described for moist samples. If the color represents a dry condition, this shall be stated in the report.

10.4 *Odor*—Describe the odor if organic or unusual. Soils containing a significant amount of organic material usually have a distinctive odor of decaying vegetation. This is especially apparent in fresh samples, but if the samples are dried, the odor may often be revived by heating a moistened sample. If the odor is unusual (petroleum product, chemical, and the like), it shall be described.

10.5 *Moisture Condition*—Describe the moisture condition as dry, moist, or wet, in accordance with the criteria in Table 3.

10.6 *HCl Reaction*—Describe the reaction with HCl as none, weak, or strong, in accordance with the critera in Table 4. Since calcium carbonate is a common cementing agent, a report of its presence on the basis of the reaction with dilute hydrochloric acid is important.

10.7 *Consistency*—For intact fine-grained soil, describe the consistency as very soft, soft, firm, hard, or very hard, in accordance with the criteria in Table 5. This observation is inappropriate for soils with significant amounts of gravel.

10.8 *Cementation*—Describe the cementation of intact coarse-grained soils as weak, moderate, or strong, in accordance with the criteria in Table 6.

Copyright ASTM International
Reproduced by IHS under license with ASTM
No reproduction or networking permitted without license from IHS

Licensee=CH2M Hill/5960458001, User=Carter, Lisa
Not for Resale, 08/04/2005 08:22:59 MDT

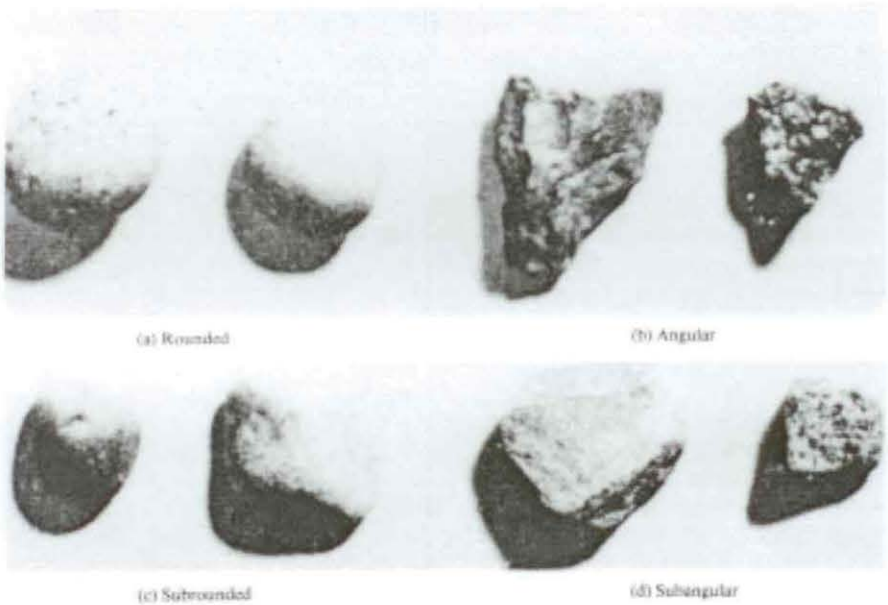

FIG. 3 Typical Angularity of Bulky Grains

TABLE 2 Criteria for Describing Particle Shape (see Fig. 4)

The particle shape shall be described as follows where length, width, and thickness refer to the greatest, intermediate, and least dimensions of a particle, respectively.

Flat	Particles with width/thickness > 3
Elongated	Particles with length/width > 3
Flat and elongated	Particles meet criteria for both flat and elongated

10.9 *Structure*—Describe the structure of intact soils in accordance with the criteria in Table 7.

10.10 *Range of Particle Sizes*—For gravel and sand components, describe the range of particle sizes within each component as defined in 3.1.2 and 3.1.6. For example, about 20 % fine to coarse gravel, about 40 % fine to coarse sand.

10.11 *Maximum Particle Size*—Describe the maximum particle size found in the sample in accordance with the following information:

10.11.1 *Sand Size*—If the maximum particle size is a sand size, describe as fine, medium, or coarse as defined in 3.1.6. For example: maximum particle size, medium sand.

10.11.2 *Gravel Size*—If the maximum particle size is a gravel size, describe the maximum particle size as the smallest sieve opening that the particle will pass. For example, maximum particle size, 1½ in. (will pass a 1½-in. square opening but not a ¾-in. square opening).

10.11.3 *Cobble or Boulder Size*—If the maximum particle size is a cobble or boulder size, describe the maximum dimension of the largest particle. For example: maximum dimension, 18 in. (450 mm).

10.12 *Hardness*—Describe the hardness of coarse sand and larger particles as hard, or state what happens when the particles are hit by a hammer, for example, gravel-size particles fracture with considerable hammer blow, some gravel-size particles crumble with hammer blow. "Hard" means particles do not crack, fracture, or crumble under a hammer blow.

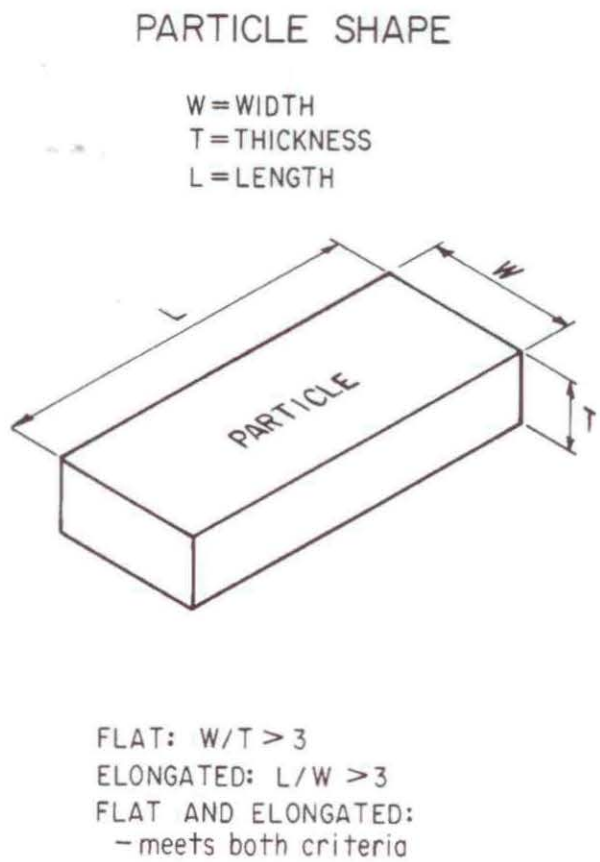

FIG. 4 Criteria for Particle Shape

10.13 Additional comments shall be noted, such as the presence of roots or root holes, difficulty in drilling or augering

Copyright ASTM International
Reproduced by IHS under license with ASTM
No reproduction or networking permitted without license from IHS

Licensee=CH2M Hill/5960458001, User=Carter, Lisa
Not for Resale, 08/04/2005 08:22:59 MDT

TABLE 3 Criteria for Describing Moisture Condition

Description	Criteria
Dry	Absence of moisture, dusty, dry to the touch
Moist	Damp but no visible water
Wet	Visible free water, usually soil is below water table

TABLE 4 Criteria for Describing the Reaction With HCl

Description	Criteria
None	No visible reaction
Weak	Some reaction, with bubbles forming slowly
Strong	Violent reaction, with bubbles forming immediately

TABLE 5 Criteria for Describing Dilatancy

Description	Criteria
Very soft	Thumb will penetrate soil more than 1 in. (25 mm)
Soft	Thumb will penetrate soil about 1 in. (25 mm)
Firm	Thumb will indent soil about ¼in. (6 mm)
Hard	Thumb will not indent soil but readily indented with thumbnail
Very hard	Thumbnail will not indent soil

TABLE 6 Criteria for Describing Toughness

Description	Criteria
Weak	Crumbles or breaks with handling or little finger pressure
Moderate	Crumbles or breaks with considerable finger pressure
Strong	Will not crumble or break with finger pressure

TABLE 7 Criteria for Describing Dilatancy

Description	Criteria
Stratified	Alternating layers of varying material or color with layers at least 6 mm thick; note thickness
Laminated	Alternating layers of varying material or color with the layers less than 6 mm thick; note thickness
Fissured	Breaks along definite planes of fracture with little resistance to fracturing
Slickensided	Fracture planes appear polished or glossy, sometimes striated
Blocky	Cohesive soil that can be broken down into small angular lumps which resist further breakdown
Lensed	Inclusion of small pockets of different soils, such as small lenses of sand scattered through a mass of clay; note thickness
Homogeneous	Same color and appearance throughout

hole, caving of trench or hole, or the presence of mica.

10.14 A local or commercial name or a geologic interpretation of the soil, or both, may be added if identified as such.

10.15 A classification or identification of the soil in accordance with other classification systems may be added if identified as such.

11. Identification of Peat

11.1 A sample composed primarily of vegetable tissue in various stages of decomposition that has a fibrous to amorphous texture, usually a dark brown to black color, and an organic odor, shall be designated as a highly organic soil and shall be identified as peat, PT, and not subjected to the identification procedures described hereafter.

12. Preparation for Identification

12.1 The soil identification portion of this practice is based on the portion of the soil sample that will pass a 3-in. (75-mm) sieve. The larger than 3-in. (75-mm) particles must be removed, manually, for a loose sample, or mentally, for an intact sample before classifying the soil.

12.2 Estimate and note the percentage of cobbles and the percentage of boulders. Performed visually, these estimates will be on the basis of volume percentage.

NOTE 9—Since the percentages of the particle-size distribution in Test Method D 2487 are by dry weight, and the estimates of percentages for gravel, sand, and fines in this practice are by dry weight, it is recommended that the report state that the percentages of cobbles and boulders are by volume.

12.3 Of the fraction of the soil smaller than 3 in. (75 mm), estimate and note the percentage, by dry weight, of the gravel, sand, and fines (see Appendix X4 for suggested procedures).

NOTE 10—Since the particle-size components appear visually on the basis of volume, considerable experience is required to estimate the percentages on the basis of dry weight. Frequent comparisons with laboratory particle-size analyses should be made.

12.3.1 The percentages shall be estimated to the closest 5 %. The percentages of gravel, sand, and fines must add up to 100 %.

12.3.2 If one of the components is present but not in sufficient quantity to be considered 5 % of the smaller than 3-in. (75-mm) portion, indicate its presence by the term *trace*, for example, trace of fines. A trace is not to be considered in the total of 100 % for the components.

13. Preliminary Identification

13.1 The soil is *fine grained* if it contains 50 % or more fines. Follow the procedures for identifying fine-grained soils of Section 14.

13.2 The soil is *coarse grained* if it contains less than 50 % fines. Follow the procedures for identifying coarse-grained soils of Section 15.

14. Procedure for Identifying Fine-Grained Soils

14.1 Select a representative sample of the material for examination. Remove particles larger than the No. 40 sieve (medium sand and larger) until a specimen equivalent to about a handful of material is available. Use this specimen for performing the dry strength, dilatancy, and toughness tests.

14.2 *Dry Strength*:

14.2.1 From the specimen, select enough material to mold into a ball about 1 in. (25 mm) in diameter. Mold the material until it has the consistency of putty, adding water if necessary.

14.2.2 From the molded material, make at least three test specimens. A test specimen shall be a ball of material about ½ in. (12 mm) in diameter. Allow the test specimens to dry in air, or sun, or by artificial means, as long as the temperature does not exceed 60°C.

14.2.3 If the test specimen contains natural dry lumps, those that are about ½ in. (12 mm) in diameter may be used in place of the molded balls.

NOTE 11—The process of molding and drying usually produces higher strengths than are found in natural dry lumps of soil.

14.2.4 Test the strength of the dry balls or lumps by crushing between the fingers. Note the strength as none, low,

Copyright ASTM International
Reproduced by IHS under license with ASTM
No reproduction or networking permitted without license from IHS

Licensee=CH2M Hill/5960458001, User=Carter, Lisa
Not for Resale, 08/04/2005 08:22:59 MDT

medium, high, or very high in accorance with the criteria in Table 8. If natural dry lumps are used, do not use the results of any of the lumps that are found to contain particles of coarse sand.

14.2.5 The presence of high-strength water-soluble cementing materials, such as calcium carbonate, may cause exceptionally high dry strengths. The presence of calcium carbonate can usually be detected from the intensity of the reaction with dilute hydrochloric acid (see 10.6).

14.3 *Dilatancy*:

14.3.1 From the specimen, select enough material to mold into a ball about ½ in. (12 mm) in diameter. Mold the material, adding water if necessary, until it has a soft, but not sticky, consistency.

14.3.2 Smooth the soil ball in the palm of one hand with the blade of a knife or small spatula. Shake horizontally, striking the side of the hand vigorously against the other hand several times. Note the reaction of water appearing on the surface of the soil. Squeeze the sample by closing the hand or pinching the soil between the fingers, and note the reaction as none, slow, or rapid in accordance with the criteria in Table 9. The reaction is the speed with which water appears while shaking, and disappears while squeezing.

14.4 *Toughness*:

14.4.1 Following the completion of the dilatancy test, the test specimen is shaped into an elongated pat and rolled by hand on a smooth surface or between the palms into a thread about ⅛ in. (3 mm) in diameter. (If the sample is too wet to roll easily, it should be spread into a thin layer and allowed to lose some water by evaporation.) Fold the sample threads and reroll repeatedly until the thread crumbles at a diameter of about ⅛ in. The thread will crumble at a diameter of ⅛ in. when the soil is near the plastic limit. Note the pressure required to roll the thread near the plastic limit. Also, note the strength of the thread. After the thread crumbles, the pieces should be lumped together and kneaded until the lump crumbles. Note the toughness of the material during kneading.

14.4.2 Describe the toughness of the thread and lump as low, medium, or high in accordance with the criteria in Table 10.

14.5 *Plasticity*—On the basis of observations made during the toughness test, describe the plasticity of the material in accordance with the criteria given in Table 11.

14.6 Decide whether the soil is an *inorganic* or an *organic* fine-grained soil (see 14.8). If inorganic, follow the steps given in 14.7.

TABLE 8 Criteria for Describing Toughness

Description	Criteria
None	The dry specimen crumbles into powder with mere pressure of handling
Low	The dry specimen crumbles into powder with some finger pressure
Medium	The dry specimen breaks into pieces or crumbles with considerable finger pressure
High	The dry specimen cannot be broken with finger pressure. Specimen will break into pieces between thumb and a hard surface
Very high	The dry specimen cannot be broken between the thumb and a hard surface

TABLE 9 Criteria for Describing Dilatancy

Description	Criteria
None	No visible change in the specimen
Slow	Water appears slowly on the surface of the specimen during shaking and does not disappear or disappears slowly upon squeezing
Rapid	Water appears quickly on the surface of the specimen during shaking and disappears quickly upon squeezing

TABLE 10 Criteria for Describing Toughness

Description	Criteria
Low	Only slight pressure is required to roll the thread near the plastic limit. The thread and the lump are weak and soft
Medium	Medium pressure is required to roll the thread to near the plastic limit. The thread and the lump have medium stiffness
High	Considerable pressure is required to roll the thread to near the plastic limit. The thread and the lump have very high stiffness

TABLE 11 Criteria for Describing Plasticity

Description	Criteria
Nonplastic	A ⅛-in. (3-mm) thread cannot be rolled at any water content
Low	The thread can barely be rolled and the lump cannot be formed when drier than the plastic limit
Medium	The thread is easy to roll and not much time is required to reach the plastic limit. The thread cannot be rerolled after reaching the plastic limit. The lump crumbles when drier than the plastic limit
High	It takes considerable time rolling and kneading to reach the plastic limit. The thread can be rerolled several times after reaching the plastic limit. The lump can be formed without crumbling when drier than the plastic limit

14.7 *Identification of Inorganic Fine-Grained Soils*:

14.7.1 Identify the soil as a *lean clay*, CL, if the soil has medium to high dry strength, no or slow dilatancy, and medium toughness and plasticity (see Table 12).

14.7.2 Identify the soil as a *fat clay*, CH, if the soil has high to very high dry strength, no dilatancy, and high toughness and plasticity (see Table 12).

14.7.3 Identify the soil as a *silt*, ML, if the soil has no to low dry strength, slow to rapid dilatancy, and low toughness and plasticity, or is nonplastic (see Table 12).

14.7.4 Identify the soil as an *elastic silt*, MH, if the soil has low to medium dry strength, no to slow dilatancy, and low to medium toughness and plasticity (see Table 12).

NOTE 12—These properties are similar to those for a lean clay. However, the silt will dry quickly on the hand and have a smooth, silky feel when dry. Some soils that would classify as MH in accordance with the criteria in Test Method D 2487 are visually difficult to distinguish from lean clays, CL. It may be necessary to perform laboratory testing for proper identification.

TABLE 12 Identification of Inorganic Fine-Grained Soils from Manual Tests

Soil Symbol	Dry Strength	Dilatancy	Toughness
ML	None to low	Slow to rapid	Low or thread cannot be formed
CL	Medium to high	None to slow	Medium
MH	Low to medium	None to slow	Low to medium
CH	High to very high	None	High

Copyright ASTM International
Reproduced by IHS under license with ASTM
No reproduction or networking permitted without license from IHS

Licensee=CH2M Hill/5960458001, User=Carter, Lisa
Not for Resale, 08/04/2005 08:22:59 MDT

14.8 *Identification of Organic Fine-Grained Soils*:

14.8.1 Identify the soil as an *organic soil*, OL/OH, if the soil contains enough organic particles to influence the soil properties. Organic soils usually have a dark brown to black color and may have an organic odor. Often, organic soils will change color, for example, black to brown, when exposed to the air. Some organic soils will lighten in color significantly when air dried. Organic soils normally will not have a high toughness or plasticity. The thread for the toughness test will be spongy.

NOTE 13—In some cases, through practice and experience, it may be possible to further identify the organic soils as organic silts or organic clays, OL or OH. Correlations between the dilatancy, dry strength, toughness tests, and laboratory tests can be made to identify organic soils in certain deposits of similar materials of known geologic origin.

14.9 If the soil is estimated to have 15 to 25 % sand or gravel, or both, the words "with sand" or "with gravel" (whichever is more predominant) shall be added to the group name. For example: "lean clay with sand, CL" or "silt with gravel, ML" (see Fig. 1a and Fig. 1b). If the percentage of sand is equal to the percentage of gravel, use "with sand."

14.10 If the soil is estimated to have 30 % or more sand or gravel, or both, the words "sandy" or "gravelly" shall be added to the group name. Add the word "sandy" if there appears to be more sand than gravel. Add the word "gravelly" if there appears to be more gravel than sand. For example: "sandy lean clay, CL", "gravelly fat clay, CH", or "sandy silt, ML" (see Fig. 1a and Fig. 1b). If the percentage of sand is equal to the percent of gravel, use "sandy."

15. Procedure for Identifying Coarse-Grained Soils

(Contains less than 50 % fines)

15.1 The soil is a *gravel* if the percentage of gravel is estimated to be more than the percentage of sand.

15.2 The soil is a *sand* if the percentage of gravel is estimated to be equal to or less than the percentage of sand.

15.3 The soil is a *clean gravel* or *clean sand* if the percentage of fines is estimated to be 5 % or less.

15.3.1 Identify the soil as a *well-graded gravel*, GW, or as a *well-graded sand*, SW, if it has a wide range of particle sizes and substantial amounts of the intermediate particle sizes.

15.3.2 Identify the soil as a *poorly graded gravel*, GP, or as a *poorly graded sand*, SP, if it consists predominantly of one size (uniformly graded), or it has a wide range of sizes with some intermediate sizes obviously missing (gap or skip graded).

15.4 The soil is either a *gravel with fines* or a *sand with fines* if the percentage of fines is estimated to be 15 % or more.

15.4.1 Identify the soil as a *clayey gravel*, GC, or a *clayey sand*, SC, if the fines are clayey as determined by the procedures in Section 14.

15.4.2 Identify the soil as a *silty gravel*, GM, or a *silty sand*, SM, if the fines are silty as determined by the procedures in Section 14.

15.5 If the soil is estimated to contain 10 % fines, give the soil a dual identification using two group symbols.

15.5.1 The first group symbol shall correspond to a clean gravel or sand (GW, GP, SW, SP) and the second symbol shall correspond to a gravel or sand with fines (GC, GM, SC, SM).

15.5.2 The group name shall correspond to the first group symbol plus the words "with clay" or "with silt" to indicate the plasticity characteristics of the fines. For example: "well-graded gravel with clay, GW-GC" or "poorly graded sand with silt, SP-SM" (see Fig. 2).

15.6 If the specimen is predominantly sand or gravel but contains an estimated 15 % or more of the other coarse-grained constituent, the words "with gravel" or "with sand" shall be added to the group name. For example: "poorly graded gravel with sand, GP" or "clayey sand with gravel, SC" (see Fig. 2).

15.7 If the field sample contains any cobbles or boulders, or both, the words "with cobbles" or "with cobbles and boulders" shall be added to the group name. For example: "silty gravel with cobbles, GM."

16. Report

16.1 The report shall include the information as to origin, and the items indicated in Table 13.

NOTE 14—*Example: Clayey Gravel with Sand and Cobbles, GC*—About 50 % fine to coarse, subrounded to subangular gravel; about 30 % fine to coarse, subrounded sand; about 20 % fines with medium plasticity, high dry strength, no dilatancy, medium toughness; weak reaction with HCl; original field sample had about 5 % (by volume) subrounded cobbles, maximum dimension, 150 mm.

In-Place Conditions—Firm, homogeneous, dry, brown

Geologic Interpretation—Alluvial fan

NOTE 15—Other examples of soil descriptions and identification are given in Appendix X1 and Appendix X2.

NOTE 16—If desired, the percentages of gravel, sand, and fines may be stated in terms indicating a range of percentages, as follows:

Trace—Particles are present but estimated to be less than 5 %
Few—5 to 10 %
Little—15 to 25 %
Some—30 to 45 %
Mostly—50 to 100 %

TABLE 13 Checklist for Description of Soils

1. Group name
2. Group symbol
3. Percent of cobbles or boulders, or both (by volume)
4. Percent of gravel, sand, or fines, or all three (by dry weight)
5. Particle-size range:
   Gravel—fine, coarse
   Sand—fine, medium, coarse
6. Particle angularity: angular, subangular, subrounded, rounded
7. Particle shape: (if appropriate) flat, elongated, flat and elongated
8. Maximum particle size or dimension
9. Hardness of coarse sand and larger particles
10. Plasticity of fines: nonplastic, low, medium, high
11. Dry strength: none, low, medium, high, very high
12. Dilatancy: none, slow, rapid
13. Toughness: low, medium, high
14. Color (in moist condition)
15. Odor (mention only if organic or unusual)
16. Moisture: dry, moist, wet
17. Reaction with HCl: none, weak, strong

For intact samples:

18. Consistency (fine-grained soils only): very soft, soft, firm, hard, very hard
19. Structure: stratified, laminated, fissured, slickensided, lensed, homogeneous
20. Cementation: weak, moderate, strong
21. Local name
22. Geologic interpretation
23. Additional comments: presence of roots or root holes, presence of mica, gypsum, etc., surface coatings on coarse-grained particles, caving or sloughing of auger hole or trench sides, difficulty in augering or excavating, etc.

Copyright ASTM International
Reproduced by IHS under license with ASTM
No reproduction or networking permitted without license from IHS

Licensee=CH2M Hill/5960458001, User=Carter, Lisa
Not for Resale, 08/04/2005 08:22:59 MDT

16.2 If, in the soil description, the soil is identified using a classification group symbol and name as described in Test Method D 2487, it must be distinctly and clearly stated in log forms, summary tables, reports, and the like, that the symbol and name are based on visual-manual procedures.

17. Precision and Bias

17.1 This practice provides qualitative information only, therefore, a precision and bias statement is not applicable.

18. Keywords

18.1 classification; clay; gravel; organic soils; sand; silt; soil classification; soil description; visual classification

APPENDIXES

(Nonmandatory Information)

X1. EXAMPLES OF VISUAL SOIL DESCRIPTIONS

X1.1 The following examples show how the information required in 16.1 can be reported. The information that is included in descriptions should be based on individual circumstances and need.

X1.1.1 *Well-Graded Gravel with Sand (GW)*—About 75 % fine to coarse, hard, subangular gravel; about 25 % fine to coarse, hard, subangular sand; trace of fines; maximum size, 75 mm, brown, dry; no reaction with HCl.

X1.1.2 *Silty Sand with Gravel (SM)*—About 60 % predominantly fine sand; about 25 % silty fines with low plasticity, low dry strength, rapid dilatancy, and low toughness; about 15 % fine, hard, subrounded gravel, a few gravel-size particles fractured with hammer blow; maximum size, 25 mm; no reaction with HCl (Note—Field sample size smaller than recommended).

In-Place Conditions—Firm, stratified and contains lenses of silt 1 to 2 in. (25 to 50 mm) thick, moist, brown to gray; in-place density 106 lb/ft^3; in-place moisture 9 %.

X1.1.3 *Organic Soil (OL/OH)*—About 100 % fines with low plasticity, slow dilatancy, low dry strength, and low toughness; wet, dark brown, organic odor; weak reaction with HCl.

X1.1.4 *Silty Sand with Organic Fines (SM)*—About 75 % fine to coarse, hard, subangular reddish sand; about 25 % organic and silty dark brown nonplastic fines with no dry strength and slow dilatancy; wet; maximum size, coarse sand; weak reaction with HCl.

X1.1.5 *Poorly Graded Gravel with Silt, Sand, Cobbles and Boulders (GP-GM)*—About 75 % fine to coarse, hard, subrounded to subangular gravel; about 15 % fine, hard, subrounded to subangular sand; about 10 % silty nonplastic fines; moist, brown; no reaction with HCl; original field sample had about 5 % (by volume) hard, subrounded cobbles and a trace of hard, subrounded boulders, with a maximum dimension of 18 in. (450 mm).

X2. USING THE IDENTIFICATION PROCEDURE AS A DESCRIPTIVE SYSTEM FOR SHALE, CLAYSTONE, SHELLS, SLAG, CRUSHED ROCK, AND THE LIKE

X2.1 The identification procedure may be used as a descriptive system applied to materials that exist in-situ as shale, claystone, sandstone, siltstone, mudstone, etc., but convert to soils after field or laboratory processing (crushing, slaking, and the like).

X2.2 Materials such as shells, crushed rock, slag, and the like, should be identified as such. However, the procedures used in this practice for describing the particle size and plasticity characteristics may be used in the description of the material. If desired, an identification using a group name and symbol according to this practice may be assigned to aid in describing the material.

X2.3 The group symbol(s) and group names should be placed in quotation marks or noted with some type of distinguishing symbol. See examples.

X2.4 Examples of how group names and symbols can be incororated into a descriptive system for materials that are not naturally occurring soils are as follows:

X2.4.1 *Shale Chunks*—Retrieved as 2 to 4-in. (50 to 100-mm) pieces of shale from power auger hole, dry, brown, no reaction with HCl. After slaking in water for 24 h, material identified as "Sandy Lean Clay (CL)"; about 60 % fines with medium plasticity, high dry strength, no dilatancy, and medium toughness; about 35 % fine to medium, hard sand; about 5 % gravel-size pieces of shale.

X2.4.2 *Crushed Sandstone*—Product of commercial crushing operation; "Poorly Graded Sand with Silt (SP-SM)"; about 90 % fine to medium sand; about 10 % nonplastic fines; dry, reddish-brown, strong reaction with HCl.

X2.4.3 *Broken Shells*—About 60 % gravel-size broken shells; about 30 % sand and sand-size shell pieces; about 10 % fines; "Poorly Graded Gravel with Sand (GP)."

X2.4.4 *Crushed Rock*—Processed from gravel and cobbles in Pit No. 7; "Poorly Graded Gravel (GP)"; about 90 % fine, hard, angular gravel-size particles; about 10 % coarse, hard,

ht ASTM International
uced by IHS under license with ASTM
oduction or networking permitted without license from IHS
Licensee=CH2M Hill/5960458001, User=Carter, Lisa
Not for Resale, 08/04/2005 08:22:59 MDT

angular sand-size particles; dry, tan; no reaction with HCl.

X3. SUGGESTED PROCEDURE FOR USING A BORDERLINE SYMBOL FOR SOILS WITH TWO POSSIBLE IDENTIFICATIONS.

X3.1 Since this practice is based on estimates of particle size distribution and plasticity characteristics, it may be difficult to clearly identify the soil as belonging to one category. To indicate that the soil may fall into one of two possible basic groups, a borderline symbol may be used with the two symbols separated by a slash. For example: SC/CL or CL/CH.

X3.1.1 A borderline symbol may be used when the percentage of fines is estimated to be between 45 and 55 %. One symbol should be for a coarse-grained soil with fines and the other for a fine-grained soil. For example: GM/ML or CL/SC.

X3.1.2 A borderline symbol may be used when the percentage of sand and the percentage of gravel are estimated to be about the same. For example: GP/SP, SC/GC, GM/SM. It is practically impossible to have a soil that would have a borderline symbol of GW/SW.

X3.1.3 A borderline symbol may be used when the soil could be either well graded or poorly graded. For example: GW/GP, SW/SP.

X3.1.4 A borderline symbol may be used when the soil could either be a silt or a clay. For example: CL/ML, CH/MH, SC/SM.

X3.1.5 A borderline symbol may be used when a fine-grained soil has properties that indicate that it is at the boundary between a soil of low compressibility and a soil of high compressibility. For example: CL/CH, MH/ML.

X3.2 The order of the borderline symbols should reflect similarity to surrounding or adjacent soils. For example: soils in a borrow area have been identified as CH. One sample is considered to have a borderline symbol of CL and CH. To show similarity, the borderline symbol should be CH/CL.

X3.3 The group name for a soil with a borderline symbol should be the group name for the first symbol, except for:

CL/CH lean to fat clay
ML/CL clayey silt
CL/ML silty clay

X3.4 The use of a borderline symbol should not be used indiscriminately. Every effort shall be made to first place the soil into a single group.

X4. SUGGESTED PROCEDURES FOR ESTIMATING THE PERCENTAGES OF GRAVEL, SAND, AND FINES IN A SOIL SAMPLE

X4.1 *Jar Method*—The relative percentage of coarse- and fine-grained material may be estimated by thoroughly shaking a mixture of soil and water in a test tube or jar, and then allowing the mixture to settle. The coarse particles will fall to the bottom and successively finer particles will be deposited with increasing time; the sand sizes will fall out of suspension in 20 to 30 s. The relative proportions can be estimated from the relative volume of each size separate. This method should be correlated to particle-size laboratory determinations.

X4.2 *Visual Method*—Mentally visualize the gravel size particles placed in a sack (or other container) or sacks. Then, do the same with the sand size particles and the fines. Then, mentally compare the number of sacks to estimate the percentage of plus No. 4 sieve size and minus No. 4 sieve size present. The percentages of sand and fines in the minus sieve size No. 4 material can then be estimated from the wash test (X4.3).

X4.3 *Wash Test (for relative percentages of sand and fines)*—Select and moisten enough minus No. 4 sieve size material to form a 1-in (25-mm) cube of soil. Cut the cube in half, set one-half to the side, and place the other half in a small dish. Wash and decant the fines out of the material in the dish until the wash water is clear and then compare the two samples and estimate the percentage of sand and fines. Remember that the percentage is based on weight, not volume. However, the volume comparison will provide a reasonable indication of grain size percentages.

X4.3.1 While washing, it may be necessary to break down lumps of fines with the finger to get the correct percentages.

X5. ABBREVIATED SOIL CLASSIFICATION SYMBOLS

X5.1 In some cases, because of lack of space, an abbreviated system may be useful to indicate the soil classification symbol and name. Examples of such cases would be graphical logs, databases, tables, etc.

X5.2 This abbreviated system is not a substitute for the full name and descriptive information but can be used in supplementary presentations when the complete description is referenced.

X5.3 The abbreviated system should consist of the soil classification symbol based on this standard with appropriate lower case letter prefixes and suffixes as:

Prefix: Suffix:

Copyright ASTM International
Reproduced by IHS under license with ASTM
No reproduction or networking permitted without license from IHS

Licensee=CH2M Hill/5960458001, User=Carter, Lisa
Not for Resale, 08/04/2005 08:22:59 MDT

s = sandy	s = with sand
g = gravelly	g = with gravel
	c = with cobbles
	b = with boulders

X5.4 The soil classification symbol is to be enclosed in parenthesis. Some examples would be:

Group Symbol and Full Name	Abbreviated
CL, Sandy lean clay	s(CL)
SP-SM, Poorly graded sand with silt and gravel	(SP-SM)g
GP, poorly graded gravel with sand, cobbles, and boulders	(GP)scb
ML, gravelly silt with sand and cobbles	g(ML)sc

SUMMARY OF CHANGES

In accordance with Committee D18 policy, this section identifies the location of changes to this standard since the last edition (1993$^{\epsilon 1}$) that may impact the use of this standard.

(1) Added Practice D 3740 to Section 2.

(2) Added Note 5 under 5.7 and renumbered subsequent notes.

The American Society for Testing and Materials takes no position respecting the validity of any patent rights asserted in connection with any item mentioned in this standard. Users of this standard are expressly advised that determination of the validity of any such patent rights, and the risk of infringement of such rights, are entirely their own responsibility.

This standard is subject to revision at any time by the responsible technical committee and must be reviewed every five years and if not revised, either reapproved or withdrawn. Your comments are invited either for revision of this standard or for additional standards and should be addressed to ASTM Headquarters. Your comments will receive careful consideration at a meeting of the responsible technical committee, which you may attend. If you feel that your comments have not received a fair hearing you should make your views known to the ASTM Committee on Standards, at the address shown below.

This standard is copyrighted by ASTM, 100 Barr Harbor Drive, PO Box C700, West Conshohocken, PA 19428-2959, United States. Individual reprints (single or multiple copies) of this standard may be obtained by contacting ASTM at the above address or at 610-832-9585 (phone), 610-832-9555 (fax), or service@astm.org (e-mail); or through the ASTM website (www.astm.org).

Copyright ASTM International
Reproduced by IHS under license with ASTM
No reproduction or networking permitted without license from IHS

Licensee=CH2M Hill/5960458001, User=Carter, Lisa
Not for Resale, 08/04/2005 08:22:59 MDT

Designation: D 1586 – 08

Standard Test Method for Standard Penetration Test (SPT) and Split-Barrel Sampling of Soils[1]

This standard is issued under the fixed designation D 1586; the number immediately following the designation indicates the year of original adoption or, in the case of revision, the year of last revision. A number in parentheses indicates the year of last reapproval. A superscript epsilon (ϵ) indicates an editorial change since the last revision or reapproval.

This standard has been approved for use by agencies of the Department of Defense.

1. Scope*

1.1 This test method describes the procedure, generally known as the Standard Penetration Test (SPT), for driving a split-barrel sampler to obtain a representative disturbed soil sample for identification purposes, and measure the resistance of the soil to penetration of the sampler. Another method (Test Method D 3550) to drive a split-barrel sampler to obtain a representative soil sample is available but the hammer energy is not standardized.

1.2 Practice D 6066 gives a guide to determining the normalized penetration resistance of sands for energy adjustments of N-value to a constant energy level for evaluating liquefaction potential.

1.3 Test results and identification information are used to estimate subsurface conditions for foundation design.

1.4 Penetration resistance testing is typically performed at 5-foot depth intervals or when a significant change of materials is observed during drilling, unless otherwise specified.

1.5 This test method is limited to use in nonlithified soils and soils whose maximum particle size is approximately less than one-half of the sampler diameter.

1.6 This test method involves use of rotary drilling equipment (Guide D 5783, Practice D 6151). Other drilling and sampling procedures (Guide D 6286, Guide D 6169) are available and may be more appropriate. Considerations for hand driving or shallow sampling without boreholes are not addressed. Subsurface investigations should be recorded in accordance with Practice D 5434. Samples should be preserved and transported in accordance with Practice D 4220 using Group B. Soil samples should be identified by group name and symbol in accordance with Practice D 2488.

1.7 All observed and calculated values shall conform to the guidelines for significant digits and rounding established in Practice D 6026, unless superseded by this test method.

1.8 The values stated in inch-pound units are to be regarded as standard, except as noted below. The values given in parentheses are mathematical conversions to SI units, which are provided for information only and are not considered standard.

1.8.1 The gravitational system of inch-pound units is used when dealing with inch-pound units. In this system, the pound (lbf) represents a unit of force (weight), while the unit for mass is slugs.

1.9 Penetration resistance measurements often will involve safety planning, administration, and documentation. This test method does not purport to address all aspects of exploration and site safety. *This standard does not purport to address all of the safety concerns, if any, associated with its use. It is the responsibility of the user of this standard to establish appropriate safety and health practices and determine the applicability of regulatory limitations prior to use.* Performance of the test usually involves use of a drill rig; therefore, safety requirements as outlined in applicable safety standards (for example, OSHA regulations,[2] NDA Drilling Safety Guide,[3] drilling safety manuals, and other applicable state and local regulations) must be observed.

2. Referenced Documents

2.1 *ASTM Standards:* [4]

D 653 Terminology Relating to Soil, Rock, and Contained Fluids

D 854 Test Methods for Specific Gravity of Soil Solids by Water Pycnometer

D 1587 Practice for Thin-Walled Tube Sampling of Soils for Geotechnical Purposes

D 2216 Test Methods for Laboratory Determination of Water (Moisture) Content of Soil and Rock by Mass

D 2487 Practice for Classification of Soils for Engineering Purposes (Unified Soil Classification System)

D 2488 Practice for Description and Identification of Soils

[1] This method is under the jurisdiction of ASTM Committee D18 on Soil and Rock and is the direct responsibility of Subcommittee D18.02 on Sampling and Related Field Testing for Soil Evaluations.

Current edition approved Feb. 1, 2008. Published March 2008. Originally approved in 1958. Last previous edition approved in 1999 as D 1586 – 99.

[2] Available from Occupational Safety and Health Administration (OSHA), 200 Constitution Ave., NW, Washington, DC 20210, http://www.osha.gov.

[3] Available from the National Drilling Association, 3511 Center Rd., Suite 8, Brunswick, OH 44212, http://www.nda4u.com.

[4] For referenced ASTM standards, visit the ASTM website, www.astm.org, or contact ASTM Customer Service at service@astm.org. For *Annual Book of ASTM Standards* volume information, refer to the standard's Document Summary page on the ASTM website.

***A Summary of Changes section appears at the end of this standard.**

Copyright © ASTM International, 100 Barr Harbor Drive, PO Box C700, West Conshohocken, PA 19428-2959, United States.

Copyright ASTM International
Provided by IHS under license with ASTM
No reproduction or networking permitted without license from IHS

Licensee=Herndon, VA/5960458008, User=Carter, Lisa
Not for Resale, 04/11/2008 08:08:12 MDT

(Visual-Manual Procedure)

D 3550 Practice for Thick Wall, Ring-Lined, Split Barrel, Drive Sampling of Soils

D 3740 Practice for Minimum Requirements for Agencies Engaged in the Testing and/or Inspection of Soil and Rock as Used in Engineering Design and Construction

D 4220 Practices for Preserving and Transporting Soil Samples

D 4633 Test Method for Energy Measurement for Dynamic Penetrometers

D 5434 Guide for Field Logging of Subsurface Explorations of Soil and Rock

D 5783 Guide for Use of Direct Rotary Drilling with Water-Based Drilling Fluid for Geoenvironmental Exploration and the Installation of Subsurface Water-Quality Monitoring Devices

D 6026 Practice for Using Significant Digits in Geotechnical Data

D 6066 Practice for Determining the Normalized Penetration Resistance of Sands for Evaluation of Liquefaction Potential

D 6151 Practice for Using Hollow-Stem Augers for Geotechnical Exploration and Soil Sampling

D 6169 Guide for Selection of Soil and Rock Sampling Devices Used With Drill Rigs for Environmental Investigations

D 6286 Guide for Selection of Drilling Methods for Environmental Site Characterization

D 6913 Test Methods for Particle-Size Distribution (Gradation) of Soils Using Sieve Analysis

3. Terminology

3.1 *Definitions:* Definitions of terms included in Terminology D 653 specific to this practice are:

3.1.1 *cathead, n*—the rotating drum or windlass in the rope-cathead lift system around which the operator wraps a rope to lift and drop the hammer by successively tightening and loosening the rope turns around the drum.

3.1.2 *drill rods, n*—rods used to transmit downward force and torque to the drill bit while drilling a borehole.

3.1.3 *N-value, n*—the blow count representation of the penetration resistance of the soil. The *N*-value, reported in blows per foot, equals the sum of the number of blows (*N*) required to drive the sampler over the depth interval of 6 to 18 in. (150 to 450 mm) (see 7.3).

3.1.4 *Standard Penetration Test (SPT), n*—a test process in the bottom of the borehole where a split-barrel sampler having an inside diameter of either 1-1/2-in. (38.1 mm) or 1-3/8-in. (34.9 mm) (see Note 2) is driven a given distance of 1.0 ft (0.30 m) after a seating interval of 0.5 ft (0.15 m) using a hammer weighing approximately 140-lbf (623-N) falling 30 ± 1.0 in. (0.76 m ± 0.030 m) for each hammer blow.

3.2 *Definitions of Terms Specific to This Standard:*

3.2.1 *anvil, n*—that portion of the drive-weight assembly which the hammer strikes and through which the hammer energy passes into the drill rods.

3.2.2 *drive weight assembly, n*—an assembly that consists of the hammer, anvil, hammer fall guide system, drill rod attachment system, and any hammer drop system hoisting attachments.

3.2.3 *hammer, n*—that portion of the drive-weight assembly consisting of the 140 ± 2 lbf (623 ± 9 N) impact weight which is successively lifted and dropped to provide the energy that accomplishes the sampling and penetration.

3.2.4 *hammer drop system, n*—that portion of the drive-weight assembly by which the operator or automatic system accomplishes the lifting and dropping of the hammer to produce the blow.

3.2.5 *hammer fall guide, n*—that part of the drive-weight assembly used to guide the fall of the hammer.

3.2.6 *number of rope turns, n*—the total contact angle between the rope and the cathead at the beginning of the operator's rope slackening to drop the hammer, divided by 360° (see Fig. 1).

3.2.7 *sampling rods, n*—rods that connect the drive-weight assembly to the sampler. Drill rods are often used for this purpose.

4. Significance and Use

4.1 This test method provides a disturbed soil sample for moisture content determination, for identification and classification (Practices D 2487 and D 2488) purposes, and for laboratory tests appropriate for soil obtained from a sampler that will produce large shear strain disturbance in the sample such as Test Methods D 854, D 2216, and D 6913. Soil deposits containing gravels, cobbles, or boulders typically result in penetration refusal and damage to the equipment.

4.2 This test method provides a disturbed soil sample for moisture content determination and laboratory identification. Sample quality is generally not suitable for advanced laboratory testing for engineering properties. The process of driving the sampler will cause disturbance of the soil and change the engineering properties. Use of the thin wall tube sampler (Practice D 1587) may result in less disturbance in soft soils. Coring techniques may result in less disturbance than SPT sampling for harder soils, but it is not always the case, that is, some cemented soils may become loosened by water action during coring; see Practice D 6151, and Guide D 6169.

4.3 This test method is used extensively in a great variety of geotechnical exploration projects. Many local correlations and widely published correlations which relate blow count, or *N*-value, and the engineering behavior of earthworks and foundations are available. For evaluating the liquefaction potential of sands during an earthquake event, the *N*-value should be normalized to a standard overburden stress level. Practice D 6066 provides methods to obtain a record of normalized resistance of sands to the penetration of a standard sampler driven by a standard energy. The penetration resistance is adjusted to drill rod energy ratio of 60 % by using a hammer system with either an estimated energy delivery or directly measuring drill rod stress wave energy using Test Method D 4633.

NOTE 1—The reliability of data and interpretations generated by this practice is dependent on the competence of the personnel performing it

ight ASTM International
ed by IHS under license with ASTM
production or networking permitted without license from IHS

Licensee=Herndon, VA/5960458008, User=Carter, Lisa
Not for Resale, 04/11/2008 08:08:12 MDT

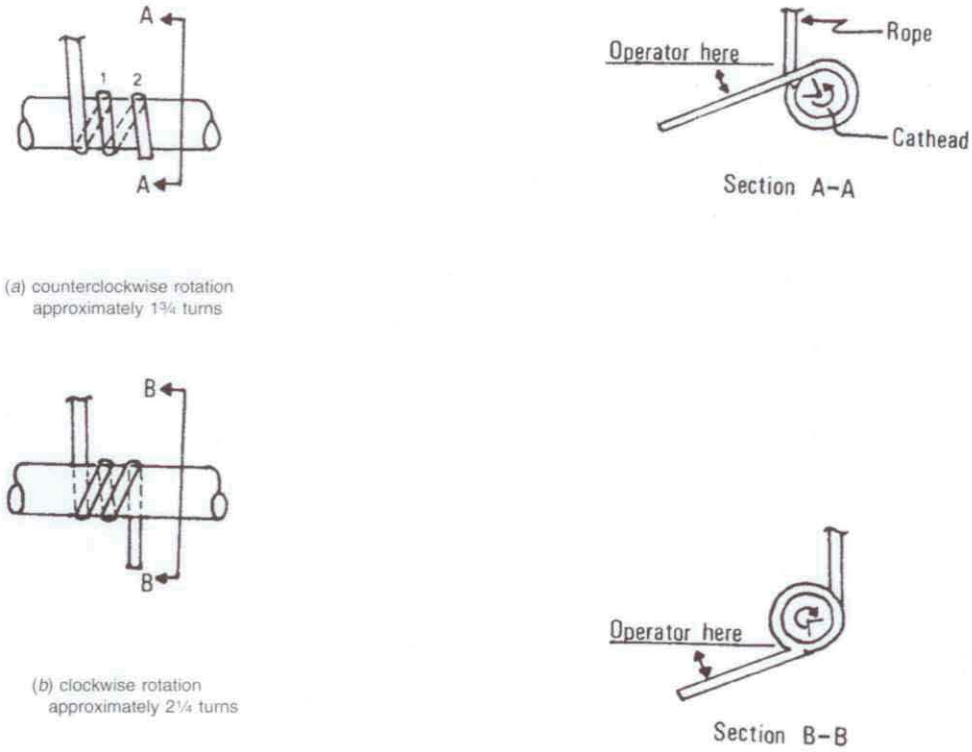

(*a*) counterclockwise rotation approximately 1¾ turns

(*b*) clockwise rotation approximately 2¼ turns

FIG. 1 Definitions of the Number of Rope Turns and the Angle for (*a*) Counterclockwise Rotation and (*b*) Clockwise Rotation of the Cathead

and the suitability of the equipment and facilities used. Agencies that meet the criteria of Practice D 3740 generally are considered capable of competent testing. Users of this practice are cautioned that compliance with Practice D 3740 does not assure reliable testing. Reliable testing depends on several factors and Practice D 3740 provides a means of evaluating some of these factors. Practice D 3740 was developed for agencies engaged in the testing, inspection, or both, of soils and rock. As such, it is not totally applicable to agencies performing this practice. Users of this test method should recognize that the framework of Practice D 3740 is appropriate for evaluating the quality of an agency performing this test method. Currently, there is no known qualifying national authority that inspects agencies that perform this test method.

5. Apparatus

5.1 *Drilling Equipment*—Any drilling equipment that provides at the time of sampling a suitable borehole before insertion of the sampler and ensures that the penetration test is performed on undisturbed soil shall be acceptable. The following pieces of equipment have proven to be suitable for advancing a borehole in some subsurface conditions:

5.1.1 *Drag, Chopping, and Fishtail Bits*, less than 6½ in. (165 mm) and greater than 2¼ in. (57 mm) in diameter may be used in conjunction with open-hole rotary drilling or casing-advancement drilling methods. To avoid disturbance of the underlying soil, bottom discharge bits are not permitted; only side discharge bits are permitted.

5.1.2 *Roller-Cone Bits*, less than 6½ in. (165 mm) and greater than 2¼ in. (57 mm) in diameter may be used in conjunction with open-hole rotary drilling or casing-advancement drilling methods if the drilling fluid discharge is deflected.

5.1.3 *Hollow-Stem Continuous Flight Augers*, with or without a center bit assembly, may be used to drill the borehole. The inside diameter of the hollow-stem augers shall be less than 6½ in. (165 mm) and not less than 2¼ in. (57 mm).

5.1.4 *Solid, Continuous Flight, Bucket and Hand Augers*, less than 6½ in. (165 mm) and not less than 2¼ in. (57 mm) in diameter may be used if the soil on the side of the borehole does not cave onto the sampler or sampling rods during sampling.

5.2 *Sampling Rods*—Flush-joint steel drill rods shall be used to connect the split-barrel sampler to the drive-weight assembly. The sampling rod shall have a stiffness (moment of inertia) equal to or greater than that of parallel wall "A" rod (a steel rod that has an outside diameter of 1-5/8 in. (41.3 mm) and an inside diameter of 1-1/8 in. (28.5 mm).

5.3 *Split-Barrel Sampler*—The standard sampler dimensions are shown in Fig. 2. The sampler has an outside diameter of 2.00 in. (50.8 mm). The inside diameter of the of the split-barrel (dimension D in Fig. 2) can be either 1½-in. (38.1

Copyright ASTM International
Provided by IHS under license with ASTM
No reproduction or networking permitted without license from IHS
Licensee=Herndon, VA/5960458008, User=Carter, Lisa
Not for Resale, 04/11/2008 08:08:12 MDT

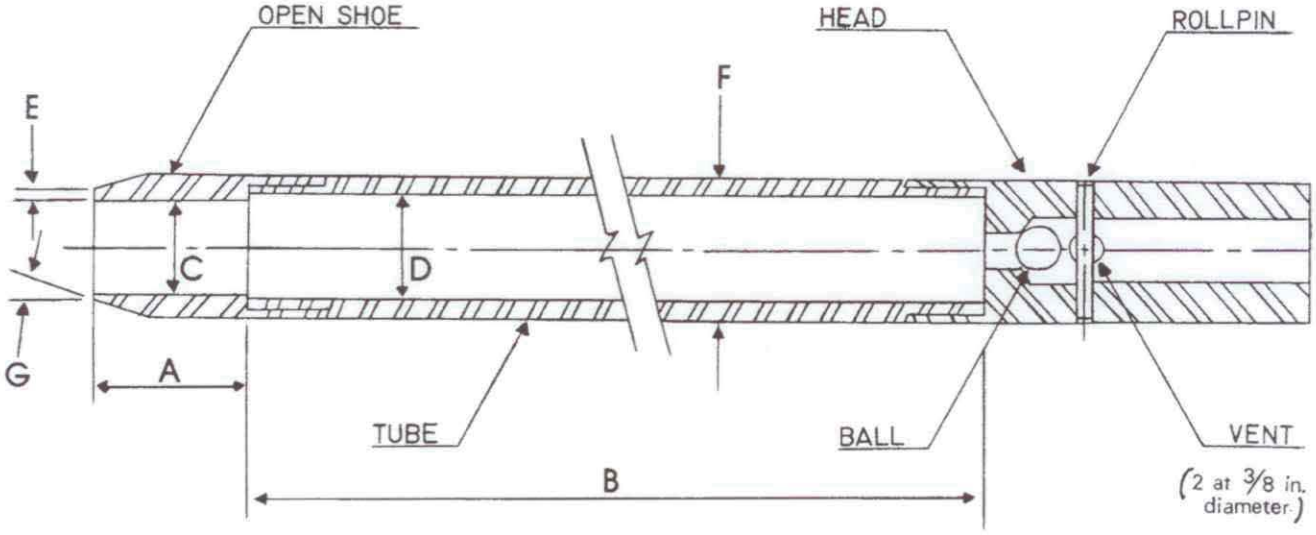

A = 1.0 to 2.0 in. (25 to 50 mm)
B = 18.0 to 30.0 in. (0.457 to 0.762 m)
C = 1.375 ± 0.005 in. (34.93 ± 0.13 mm)
D = 1.50 ± 0.05 – 0.00 in. (38.1 ± 1.3 – 0.0 mm)
E = 0.10 ± 0.02 in. (2.54 ± 0.25 mm)
F = 2.00 ± 0.05 – 0.00 in. (50.8 ± 1.3 – 0.0 mm)
G = 16.0° to 23.0°

FIG. 2 Split-Barrel Sampler

mm) or 1⅜-in. (34.9 mm) (see Note 2). A 16-gauge liner can be used inside the 1½-in. (38.1 mm) split barrel sampler. The driving shoe shall be of hardened steel and shall be replaced or repaired when it becomes dented or distorted. The penetrating end of the drive shoe may be slightly rounded. The split-barrel sampler must be equipped with a ball check and vent. Metal or plastic baskets may be used to retain soil samples.

NOTE 2—Both theory and available test data suggest that *N*-values may differ as much as 10 to 30 % between a constant inside diameter sampler and upset wall sampler. If it is necessary to correct for the upset wall sampler refer to Practice D 6066. In North America, it is now common practice to use an upset wall sampler with an inside diameter of 1½ in. At one time, liners were used but practice evolved to use the upset wall sampler without liners. Use of an upset wall sampler allows for use of retainers if needed, reduces inside friction, and improves recovery. Many other countries still use a constant ID split-barrel sampler, which was the original standard and still acceptable within this standard.

5.4 *Drive-Weight Assembly*:

5.4.1 *Hammer and Anvil*—The hammer shall weigh 140 ± 2 lbf (623 ± 9 N) and shall be a rigid metallic mass. The hammer shall strike the anvil and make steel on steel contact when it is dropped. A hammer fall guide permitting an unimpeded fall shall be used. Fig. 3 shows a schematic of such hammers. Hammers used with the cathead and rope method shall have an unimpeded over lift capacity of at least 4 in. (100 mm). For safety reasons, the use of a hammer assembly with an internal anvil is encouraged as shown in Fig. 3. The total mass of the hammer assembly bearing on the drill rods should not be more than 250 ± 10 lbm (113 ± 5 kg).

NOTE 3—It is suggested that the hammer fall guide be permanently marked to enable the operator or inspector to judge the hammer drop height.

5.4.2 *Hammer Drop System*—Rope-cathead, trip, semi-automatic or automatic hammer drop systems, as shown in Fig. 4 may be used, providing the lifting apparatus will not cause penetration of the sampler while re-engaging and lifting the hammer.

5.5 *Accessory Equipment*—Accessories such as labels, sample containers, data sheets, and groundwater level measuring devices shall be provided in accordance with the requirements of the project and other ASTM standards.

6. Drilling Procedure

6.1 The borehole shall be advanced incrementally to permit intermittent or continuous sampling. Test intervals and locations are normally stipulated by the project engineer or geologist. Typically, the intervals selected are 5 ft (1.5 m) or less in homogeneous strata with test and sampling locations at every change of strata. Record the depth of drilling to the nearest 0.1 ft (0.030 m).

6.2 Any drilling procedure that provides a suitably clean and stable borehole before insertion of the sampler and assures that the penetration test is performed on essentially undisturbed soil shall be acceptable. Each of the following procedures has proven to be acceptable for some subsurface conditions. The subsurface conditions anticipated should be considered when selecting the drilling method to be used.

6.2.1 Open-hole rotary drilling method.

6.2.2 Continuous flight hollow-stem auger method.

6.2.3 Wash boring method.

6.2.4 Continuous flight solid auger method.

6.3 Several drilling methods produce unacceptable boreholes. The process of jetting through an open tube sampler and

Copyright ASTM International
Provided by IHS under license with ASTM
No reproduction or networking permitted without license from IHS

Licensee=Herndon, VA/5960458008, User=Carter, Lisa
Not for Resale, 04/11/2008 08:08:12 MDT

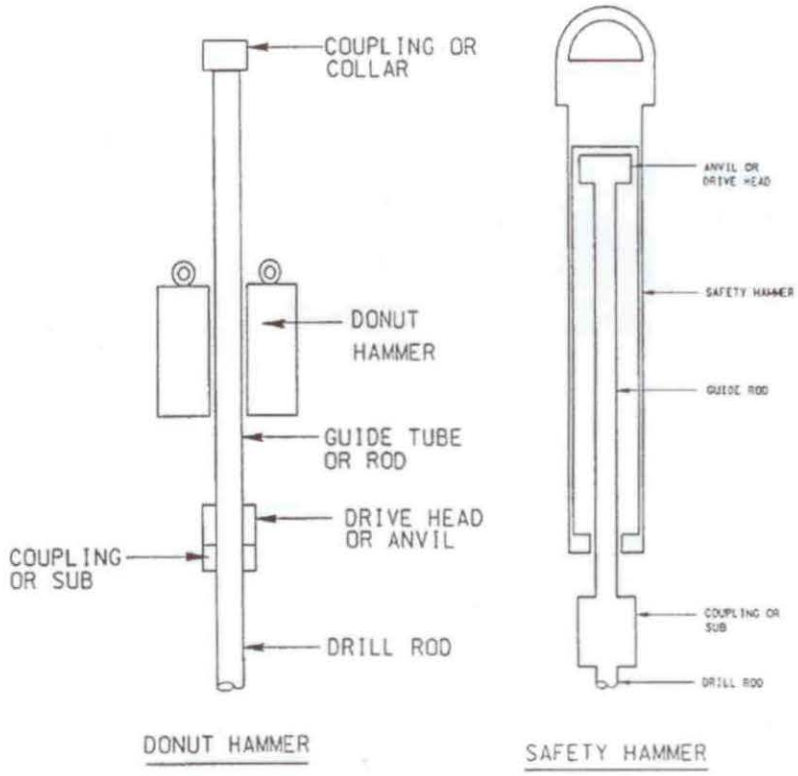

FIG. 3 Schematic Drawing of the Donut Hammer and Safety Hammer

then sampling when the desired depth is reached shall not be permitted. The continuous flight solid auger method shall not be used for advancing the borehole below a water table or below the upper confining bed of a confined non-cohesive stratum that is under artesian pressure. Casing may not be advanced below the sampling elevation prior to sampling. Advancing a borehole with bottom discharge bits is not permissible. It is not permissible to advance the borehole for subsequent insertion of the sampler solely by means of previous sampling with the SPT sampler.

6.4 The drilling fluid level within the borehole or hollow-stem augers shall be maintained at or above the in situ groundwater level at all times during drilling, removal of drill rods, and sampling.

7. Sampling and Testing Procedure

7.1 After the borehole has been advanced to the desired sampling elevation and excessive cuttings have been removed, record the cleanout depth to the nearest 0.1 ft (0.030 m), and prepare for the test with the following sequence of operations:

7.1.1 Attach either split-barrel sampler Type A or B to the sampling rods and lower into the borehole. Do not allow the sampler to drop onto the soil to be sampled.

7.1.2 Position the hammer above and attach the anvil to the top of the sampling rods. This may be done before the sampling rods and sampler are lowered into the borehole.

7.1.3 Rest the dead weight of the sampler, rods, anvil, and drive weight on the bottom of the borehole. Record the sampling start depth to the nearest 0.1 ft (0.030 m). Compare the sampling start depth to the cleanout depth in 7.1. If excessive cuttings are encountered at the bottom of the borehole, remove the sampler and sampling rods from the borehole and remove the cuttings.

7.1.4 Mark the drill rods in three successive 0.5-foot (0.15 m) increments so that the advance of the sampler under the impact of the hammer can be easily observed for each 0.5-foot (0.15 m) increment.

7.2 Drive the sampler with blows from the 140-lbf (623-N) hammer and count the number of blows applied in each 0.5-foot (0.15-m) increment until one of the following occurs:

7.2.1 A total of 50 blows have been applied during any one of the three 0.5-foot (0.15-m) increments described in 7.1.4.

7.2.2 A total of 100 blows have been applied.

7.2.3 There is no observed advance of the sampler during the application of 10 successive blows of the hammer.

7.2.4 The sampler is advanced the complete 1.5 ft. (0.45 m) without the limiting blow counts occurring as described in 7.2.1, 7.2.2, or 7.2.3.

7.2.5 If the sampler sinks under the weight of the hammer, weight of rods, or both, record the length of travel to the nearest 0.1 ft (0.030 m), and drive the sampler through the remainder of the test interval. If the sampler sinks the complete interval, stop the penetration, remove the sampler and sampling rods from the borehole, and advance the borehole through the very soft or very loose materials to the next desired sampling elevation. Record the *N*-value as either weight of hammer, weight of rods, or both.

Copyright ASTM International
Provided by IHS under license with ASTM
No reproduction or networking permitted without license from IHS

Licensee=Herndon, VA/5960458008, User=Carter, Lisa
Not for Resale, 04/11/2008 08:08:12 MDT

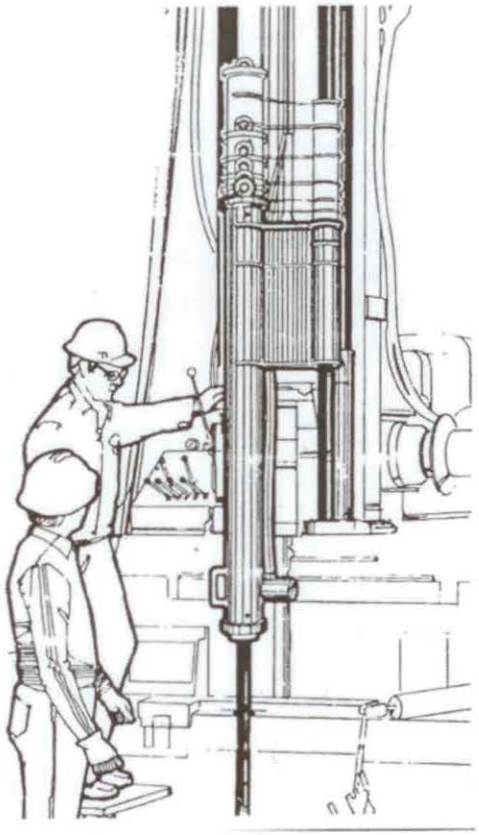

FIG. 4 Automatic Trip Hammer

7.3 Record the number of blows (*N*) required to advance the sampler each 0.5-foot (0.15 m) of penetration or fraction thereof. The first 0.5-foot (0.15 m) is considered to be a seating drive. The sum of the number of blows required for the second and third 0.5-foot (0.15 m) of penetration is termed the "standard penetration resistance," or the "*N*-value." If the sampler is driven less than 1.5 ft (0.45 m), as permitted in 7.2.1, 7.2.2, or 7.2.3, the number of blows per each complete 0.5-foot (0.15 m) increment and per each partial increment shall be recorded on the boring log. For partial increments, the depth of penetration shall be reported to the nearest 0.1 ft (0.030 m) in addition to the number of blows. If the sampler advances below the bottom of the borehole under the static weight of the drill rods or the weight of the drill rods plus the static weight of the hammer, this information should be noted on the boring log.

7.4 The raising and dropping of the 140-lbf (623-N) hammer shall be accomplished using either of the following two methods. Energy delivered to the drill rod by either method can be measured according to procedures in Test Method D 4633.

7.4.1 *Method A*—By using a trip, automatic, or semi-automatic hammer drop system that lifts the 140-lbf (623-N) hammer and allows it to drop 30 ± 1.0 in. (0.76 m ± 0.030 m) with limited unimpedence. Drop heights adjustments for automatic and trip hammers should be checked daily and at first indication of variations in performance. Operation of automatic hammers shall be in strict accordance with operations manuals.

7.4.2 *Method B*—By using a cathead to pull a rope attached to the hammer. When the cathead and rope method is used the system and operation shall conform to the following:

7.4.2.1 The cathead shall be essentially free of rust, oil, or grease and have a diameter in the range of 6 to 10 in. (150 to 250 mm).

7.4.2.2 The cathead should be operated at a minimum speed of rotation of 100 RPM.

7.4.2.3 The operator should generally use either 1-3/4 or 2-1/4 rope turns on the cathead, depending upon whether or not the rope comes off the top (1-3/4 turns for counterclockwise rotation) or the bottom (2-1/4 turns for clockwise rotation) of the cathead during the performance of the penetration test, as shown in Fig. 1. It is generally known and accepted that 2-3/4 or more rope turns considerably impedes the fall of the hammer and should not be used to perform the test. The cathead rope should be stiff, relatively dry, clean, and should be replaced when it becomes excessively frayed, oily, limp, or burned.

7.4.2.4 For each hammer blow, a 30 ± 1.0 in. (0.76 m ± 0.030 m) lift and drop shall be employed by the operator. The operation of pulling and throwing the rope shall be performed rhythmically without holding the rope at the top of the stroke.

NOTE 4—If the hammer drop height is something other than 30 ± 1.0 in. (0.76 m ± 0.030 m), then record the new drop height. For soils other than sands, there is no known data or research that relates to adjusting the *N*-value obtained from different drop heights. Test method D 4633 provides information on making energy measurement for variable drop

Copyright ASTM International
Provided by IHS under license with ASTM
No reproduction or networking permitted without license from IHS

Licensee=Herndon, VA/5960458008, User=Carter, Lisa
Not for Resale, 04/11/2008 08:08:12 MDT

heights and Practice D 6066 provides information on adjustment of *N*-value to a constant energy level (60 % of theoretical, N60). Practice D 6066 allows the hammer drop height to be adjusted to provide 60 % energy.

7.5 Bring the sampler to the surface and open. Record the percent recovery to the nearest 1 % or the length of sample recovered to the nearest 0.01 ft (5 mm). Classify the soil samples recovered as to, in accordance with Practice D 2488, then place one or more representative portions of the sample into sealable moisture-proof containers (jars) without ramming or distorting any apparent stratification. Seal each container to prevent evaporation of soil moisture. Affix labels to the containers bearing job designation, boring number, sample depth, and the blow count per 0.5-foot (0.15-m) increment. Protect the samples against extreme temperature changes. If there is a soil change within the sampler, make a jar for each stratum and note its location in the sampler barrel. Samples should be preserved and transported in accordance with Practice D 4220 using Group B.

8. Data Sheet(s)/Form(s)

8.1 Data obtained in each borehole shall be recorded in accordance with the Subsurface Logging Guide D 5434 as required by the exploration program. An example of a sample data sheet is included in Appendix X1.

8.2 Drilling information shall be recorded in the field and shall include the following:

8.2.1 Name and location of job,

8.2.2 Names of crew,

8.2.3 Type and make of drilling machine,

8.2.4 Weather conditions,

8.2.5 Date and time of start and finish of borehole,

8.2.6 Boring number and location (station and coordinates, if available and applicable),

8.2.7 Surface elevation, if available,

8.2.8 Method of advancing and cleaning the borehole,

8.2.9 Method of keeping borehole open,

8.2.10 Depth of water surface to the nearest 0.1 ft (0.030 m) and drilling depth to the nearest 0.1 ft (0.030 m) at the time of a noted loss of drilling fluid, and time and date when reading or notation was made,

8.2.11 Location of strata changes, to the nearest 0.5 ft (15 cm),

8.2.12 Size of casing, depth of cased portion of borehole to the nearest 0.1 ft (0.030 m),

8.2.13 Equipment and Method A or B of driving sampler,

8.2.14 Sampler length and inside diameter of barrel, and if a sample basket retainer is used,

8.2.15 Size, type, and section length of the sampling rods, and

8.2.16 Remarks.

8.3 Data obtained for each sample shall be recorded in the field and shall include the following:

8.3.1 Top of sample depth to the nearest 0.1 ft (0.030 m) and, if utilized, the sample number,

8.3.2 Description of soil,

8.3.3 Strata changes within sample,

8.3.4 Sampler penetration and recovery lengths to the nearest 0.1 ft (0.030 m), and

8.3.5 Number of blows per 0.5 foot (0.015 m) or partial increment.

9. Precision and Bias

9.1 *Precision*—Test data on precision is not presented due to the nature of this test method. It is either not feasible or too costly at this time to have ten or more agencies participate in an in situ testing program at a given site.

9.1.1 The Subcommittee 18.02 is seeking additional data from the users of this test method that might be used to make a limited statement on precision. Present knowledge indicates the following:

9.1.1.1 Variations in *N*-values of 100 % or more have been observed when using different standard penetration test apparatus and drillers for adjacent boreholes in the same soil formation. Current opinion, based on field experience, indicates that when using the same apparatus and driller, *N*-values in the same soil can be reproduced with a coefficient of variation of about 10 %.

9.1.1.2 The use of faulty equipment, such as an extremely massive or damaged anvil, a rusty cathead, a low speed cathead, an old, oily rope, or massive or poorly lubricated rope sheaves can significantly contribute to differences in *N*-values obtained between operator-drill rig systems.

9.2 *Bias*—There is no accepted reference value for this test method, therefore, bias cannot be determined.

10. Keywords

10.1 blow count; in-situ test; penetration resistance; soil; split-barrel sampling; standard penetration test

Copyright ASTM International
Provided by IHS under license with ASTM
No reproduction or networking permitted without license from IHS

Licensee=Herndon, VA/5960458008, User=Carter, Lisa
Not for Resale, 04/11/2008 08:08:12 MDT

APPENDIX

(Nonmandatory Information)

X1. Example Data Sheet

X1.1 See Fig. 5.

ight ASTM International
ied by IHS under license with ASTM
production or networking permitted without license from IHS

Licensee=Herndon, VA/5960458008, User=Carter, Lisa
Not for Resale, 04/11/2008 08:08:12 MDT

DRILLERS BORING LOG

Project: _____ Project No: _____ Boring No: _____

Location: _____ Sheet _____ of _____

Date Started _____ Date Completed _____

Drill Crew:

Boring Location
Station _____ Offset _____

Elevation

Strata Depth		Soil Description and Remarks	Sample Type	No.	Depth		Recovery	N-Values		
From	To				From	To		6"	6"	6"

Drill Rig Type _____

Method Of Drilling:

Auger _____ Size _____

Wash _____ Water _____ Mud _____

Hammer Type

Auto _____ Manual _____

Split-Spoon Type

Length _____ Liner Used _____

Boring Size _____ Bit Used _____

Casing Size _____ Length _____

Weather _____

Non-Drilling Time (Hrs.)

Boring Layout _____ Moving _____

Hauling Water _____ Standby _____

Water Level @ _____ Date _____ Time _____

@ _____ Date _____ Time _____

@ _____ Date _____ Time _____

Cave-in Depth

@ _____ Date _____ Time _____

FIG. 5 Example Data Sheet

Copyright ASTM International
Provided by IHS under license with ASTM
No reproduction or networking permitted without license from IHS

Licensee=Herndon, VA/5960458008, User=Carter, Lisa
Not for Resale, 04/11/2008 08:08:12 MDT

SUMMARY OF CHANGES

Committee D18 has identified the location of selected changes to this standard since the last issue (D 1586 – 99) that may impact the use of this standard. (Approved February 1, 2008.)

(*1*) There have been numerous changes to this standard to list them separately. From the most recent main ballot process, additional changes were requested and incorporated into this newest revision. Stated below is a highlight of some of the changes.

(*2*) Scope was completely revised.

(*3*) Referenced Documents updated to include new standards.

(*4*) Terminology: added section on Definitions.

(*5*) Significance and Use: clarified use of the SPT test.

(*6*) Apparatus: general editorial changes.

(*7*) Sampling and Testing Procedure: general editorial changes.

(*8*) Data Sheets/Forms: general editorial changes.

(*9*) Precision and Bias: added Sections 9.1.1.1 and 9.1.1.2.

ASTM International takes no position respecting the validity of any patent rights asserted in connection with any item mentioned in this standard. Users of this standard are expressly advised that determination of the validity of any such patent rights, and the risk of infringement of such rights, are entirely their own responsibility.

This standard is subject to revision at any time by the responsible technical committee and must be reviewed every five years and if not revised, either reapproved or withdrawn. Your comments are invited either for revision of this standard or for additional standards and should be addressed to ASTM International Headquarters. Your comments will receive careful consideration at a meeting of the responsible technical committee, which you may attend. If you feel that your comments have not received a fair hearing you should make your views known to the ASTM Committee on Standards, at the address shown below.

This standard is copyrighted by ASTM International, 100 Barr Harbor Drive, PO Box C700, West Conshohocken, PA 19428-2959, United States. Individual reprints (single or multiple copies) of this standard may be obtained by contacting ASTM at the above address or at 610-832-9585 (phone), 610-832-9555 (fax), or service@astm.org (e-mail); or through the ASTM website (www.astm.org).

Copyright ASTM International
Provided by IHS under license with ASTM
No reproduction or networking permitted without license from IHS

Licensee=Herndon, VA/5960458008, User=Carter, Lisa
Not for Resale, 04/11/2008 08:08:12 MDT

Table 1
EXAMPLE SOIL DESCRIPTIONS

POORLY GRADED SAND (SP), light brown, moist, loose, fine sand size

FAT CLAY (CH), dark gray, moist, stiff

SILT (ML), light greenish gray, wet, very loose, some mica, lacustrine

WELL-GRADED SAND WITH GRAVEL (SM), reddish brown, moist, dense, subangular gravel to 0.6 inches max

POORLY GRADED SAND WITH SILT (SP-SM), white, wet, medium dense

ORGANIC SOIL WITH SAND (OH), dark brown to black, wet, firm to stiff but spongy undisturbed, becomes soft and sticky when remolded, many fine roots, trace of mica

SILTY GRAVEL WITH SAND (GM), brownish red, moist, very dense, subrounded gravel to 1.2 inches max

INTERLAYERED SILT (60 percent) AND CLAY (40 percent): SILT WITH SAND (ML), medium greenish gray, nonplastic, sudden reaction to shaking, layers mostly 1.5 to 8.3 inches thick; LEAN CLAY (CL), dark gray, firm and brittle undisturbed, becomes very soft and sticky when remolded, layers 0.2 to 1.2 inches thick

SILTY SAND WITH GRAVEL (SM), light yellowish brown, moist, medium dense, weak gravel to 1.0 inches max, very few small particles of coal, fill

SANDY ELASTIC SILT (MH), very light gray to white, wet, stiff, weak calcareous cementation

LEAN CLAY WITH SAND (CL/MH), dark brownish gray, moist, stiff

WELL-GRADED GRAVEL WITH SILT (GW-GM), brown, moist, very dense, rounded gravel to 1.0 inches max

Table 2
CRITERIA FOR DESCRIBING MOISTURE CONDITION

Description	Criteria
Dry	Absence of moisture, dusty, dry to the touch
Moist	Damp, but no visible water
Wet	Visible free water, usually soil is below water table

Table 3
RELATIVE DENSITY OF COARSE-GRAINED SOIL
(Developed from Sowers, 1979)

Blows/Ft	Relative Density	Field Test
0-4	Very loose	Easily penetrated with ½-in. steel rod pushed by hand
5-10	Loose	Easily penetrated with ½-in. steel rod pushed by hand
11-30	Medium	Easily penetrated with ½-in. steel rod driven with 5-lb hammer
31-50	Dense	Penetrated a foot with ½-in. steel rod driven with 5-lb hammer
>50	Very dense	Penetrated only a few inches with ½-in. steel rod driven with 5-lb hammer

Table 4
CONSISTENCY OF FINE-GRAINED SOIL
(Developed from Sowers, 1979)

Blows/Ft	Consistency	Pocket Penetrometer (TSF)	Torvane (TSF)	Field Test
<2	Very soft	<0.25	<0.12	Easily penetrated several inches by fist
2-4	Soft	0.25-0.50	0.12-0.25	Easily penetrated several inches by thumb
5-8	Firm	0.50-1.0	0.25-0.5	Can be penetrated several inches by thumb with moderate effort
9-15	Stiff	1.0-2.0	0.5-1.0	Readily indented by thumb, but penetrated only with great effort
16-30	Very stiff	2.0-4.0	1.0-2.0	Readily indented by thumbnail
>30	Hard	>4.0	>2.0	Indented with difficulty by thumbnail

STANDARD OPERATING PROCEDURE

Shallow Soil Sampling

I. Purpose

To provide general guidelines for the collection and handling of surface soil samples during field operations.

II. Scope

The method described for surface soil sampling is applicable for loosely packed earth and is used to collect disturbed-soil samples.

III. Equipment and Materials

- Sample jars.
- A hand auger or other device that can be used to remove the soil from the ground. Only stainless steel, Teflon, or glass materials should be used. The only exception is split spoons, which are most commonly available in carbon steel; these are acceptable for use only if they are not rusty.
- A stainless steel spatula or disposable plastic scoop should be used to remove material from the sampling device.
- Unpainted wooden stakes or pin flags
- Fiberglass measuring tape (at least 200 feet in length)
- GPS Unit (if available)

IV. Procedures and Guidelines

A. Wear protective gear, as specified in the Health and Safety Plan.

B. To locate samples, identify the correct location using the pin flags or stakes. Proceed to collect a sample from the undisturbed soil adjacent to the marker following steps C and D. If markers are not present, the following procedures will be used.

1. For samples on a grid:

a. Use measuring tape to locate each sampling point on the first grid line as prescribed in the sampling plan. As each point is located, drive a numbered stake in the ground and record its location on the site map and in the logbook.

b. Proceed to sample the points on the grid line.

c. Measure to location where next grid line is to start and stake first sample. For subsequent samples on the line take two orthogonal measurements: one to the previous grid line, and one to the previous sample on the same grid line.

d. Proceed to sample the points on the grid line as described in Section C below.

e. Repeat 1c and 1d above until all samples are collected from the area.

f. Or, a GPS unit can be used to identify each location based on map coordinated, if available.

2. For non-grid samples:

a. Use steel measuring tape to position sampling point at location described in the sampling plan by taking two measurements from fixed landmarks (e.g., corner of house and fence post).

b. Note measurements, landmarks, and sampling point on a sketch in the field notebook, and on a site location map.

c. Proceed to sample as described in Section C below.

d. Repeat 2a through 2c above until all samples are collected from the area.

e. Or, a GPS unit can be used to identify each location based on map coordinated, if available.

C. To the extent possible, differentiate between fill and natural soil. If both are encountered at a boring location, sample both as prescribed in the field sampling plan. Do not locate samples in debris, tree roots, or standing water. In residential areas, do not sample in areas where residents' activities may impact the sample (e.g., barbecue areas, beneath eaves of roofs, driveways, garbage areas). If an obstacle prevents sampling at a measured grid point, move as close as possible, but up to a distance of one half the grid spacing in any direction to locate an appropriate sample. If an appropriate location cannot be found, consult with the Field Team Leader (FTL). If the FTL concurs, the sampling point will be deleted from the program. The FTL will contact the CH2M HILL project manager (PM) immediately. The PM and Navy Technical Representative (NTR) will discuss whether the point should be deleted from the program. If it is deleted, the PM will follow-up with the NTR in writing.

D. To collect samples:

1. Use a decontaminated stainless steel scoop/trowel or disposable plastic scoop to scrape away surficial organic material (grass, leaves, etc.) adjacent to

the stake. New disposable scoops or trowels may also be used to reduce the need for equipment blanks.

2. If sampling:

   a. Surface soil: Obtain soil sample by scooping soil using the augering scoop/trowel, starting from the surface and digging down to a depth of about 6 inches, or the depth specified in the workplan.

   b. Subsurface soil: Obtain the subsurface soil sample using an auger down to the depths prescribed in the field sampling plan.

3. Take a photo ionization detector (PID) reading of the sampled soil if organics are anticipated to be present and record the response in the field notebook. Also record lithologic description and any pertinent observations (such as discoloration) in the logbook.

4. Empty the contents of the scoop/trowel into a decontaminated stainless steel pan or dedicated sealable bag.

5. Repeat this procedure until sufficient soil is collected to meet volume requirements.

6. For TCL VOC and field GC aliquots, fill sample jars directly with the trowel or scoop or specialized sampling equipment (i.e. Encore® or Terra Core® sampler) and cap immediately upon filling. DO NOT HOMOGENIZE.

7. For TCL pesticides/PCBs and SVOCs, TAL metals, and field XRF aliquots, homogenize cuttings in the pan using a decontaminated stainless steel utensil in accordance with SOP *Decontamination of Drilling Rigs and Equipment*.

8. Transfer sample for analysis into appropriate containers with a decontaminated utensil.

9. Backfill the hole with soil removed from the borehole. To the extent possible, replace topsoil and grass and attempt to return appearance of sampling area to its pre-sampled condition. For samples in non-residential, unmowed areas, mark the sample number on the stake and leave stake in place. In mowed areas, remove stake.

V. Attachments

None.

VI. Key Checks and Items

- Use phthalate-free latex or surgical gloves and other personal protective equipment.
- Transfer volatiles first, avoid mixing.
- Decontaminate utensils before reuse, or use dedicated, disposable utensils.

STANDARD OPERATING PROCEDURE

Packaging and Shipping Procedures for Low-Concentration Samples

I. Purpose and Scope

The purpose of this guideline is to describe the packaging and shipping of low-concentration samples of various media to a laboratory for analysis.

II. Scope

The guideline only discusses the packaging and shipping of samples that are anticipated to have low concentrations of chemical constituents. Whether or not samples should be classified as low-concentration or otherwise will depend upon the site history, observation of the samples in the field, odor, and photoionization-detector readings.

If the site is known to have produced high-concentration samples in the past or the sampler suspects that high concentrations of contaminants might be present in the samples, then the sampler should conservatively assume that the samples cannot be classified as low-concentration. Samples that are anticipated to have medium to high concentrations of constituents should be packaged and shipped accordingly.

If warranted, procedures for dangerous-goods shipping may be implemented. Dangerous goods and hazardous materials pose an unreasonable risk to health, safety, or property during transportation without special handling. As a result only employees who are trained under CH2M HILL Dangerous Goods Shipping course may ship or transport dangerous goods. Employees should utilize the HAZMAT ShipRight tool on the Virtual Office and/or contact a designated CH2M HILL HazMat advisor with questions.

III. Equipment and Materials

- Coolers
- Clear tape
- “This Side Up” labels
- “Fragile” labels
- Vermiculite
- Ziplock bags or bubble wrap
- Ice
- Chain-of-Custody form (completed)
- Custody seals

IV. Procedures and Guidelines

Low-Concentration Samples

A. Prepare coolers for shipment:

- Tape drains shut.
- Affix "This Side Up" labels on all four sides and "Fragile" labels on at least two sides of each cooler.
- Place mailing label with laboratory address on top of coolers.
- Fill bottom of coolers with about 3 inches of vermiculite or absorbent pads.

B. Arrange decontaminated sample containers in groups by sample number. Consolidate VOC samples into one cooler to minimize the need for trip blanks.

C. Affix appropriate adhesive sample labels to each container. Protect with clear label protection tape.

D. Seal each sample bottle within a separate ziplock plastic bag or bubble wrap, if available. Tape the bag around bottle. Sample label should be visible through the bag.

E. Arrange sample bottles in coolers so that they do not touch.

F. If ice is required to preserve the samples, cubes should be repackaged in zip-lock bags and placed on and around the containers.

G. Fill remaining spaces with vermiculite or absorbent pads.

H. Complete and sign chain-of-custody form (or obtain signature) and indicate the time and date it was relinquished to Federal Express or the courier.

J Close lid and latch.

K. Carefully peel custody seals from backings and place intact over lid openings (right front and left back). Cover seals with clear protection tape.

L. Tape cooler shut on both ends, making several complete revolutions with strapping tape. Cover custody seals with tape to avoid seals being able to be peeled from the cooler.

M. Relinquish to Federal Express or to a courier arranged with the laboratory. Place airbill receipt inside the mailing envelope and send to the sample documentation coordinator along with the other documentation.

Medium- and High-Concentration Samples:

Medium- and high-concentration samples are packaged using the same techniques used to package low-concentration samples, with potential additional restrictions. If applicable, the sample handler must refer to instructions associated with the shipping of dangerous goods for the necessary procedures for shipping by Federal Express or other overnight carrier. If warranted, procedures for dangerous-goods shipping may be implemented. Dangerous goods and hazardous materials pose an unreasonable risk to health, safety, or property during transportation without special handling. As a result only employees who are trained under CH2M HILL Dangerous Goods Shipping course may ship or transport dangerous goods. Employees should utilize the HAZMAT ShipRight tool on the Virtual Office and/or contact a designated CH2M HILL HazMat advisor with questions.

V. Attachments

None.

VI. Key Checks and Items

- Be sure laboratory address is correct on the mailing label
- Pack sample bottles carefully, with adequate vermiculite or other packaging and without allowing bottles to touch
- Be sure there is adequate ice
- Include chain-of-custody form
- Include custody seals

STANDARD OPERATING PROCEDURE

Aquifer Slug Testing

I. Purpose and Scope

The purpose of this procedure is to outline the equipment and methods that will be used to perform variable-head tests ("slug" tests) on piezometers and monitoring wells. The guidance covers use of both air and solid displacement methods.

II. Equipment and Materials

- In-Situ data loggers or equivalent
- Well-testing assembly
  - packer
  - fittings for pressure transducers
  - fittings for air supply
  - release valve
- Compressed air
- Computer and associated equipment
- Solid displacement device with rope

III. Procedures and Guidelines

The tests to be performed are rising head tests. The tests are accomplished by lowering the head of water in the well and monitoring the recovery of the water level to the static water level. The water level will be lowered by one of two methods. One method is the use of an air displacement device. Alternatively, a solid displacement device removed from the well will be used.

The air displacement apparatus consists of a packer assembly, fittings to accommodate transducers and air pressurization, and a pressure-release valve. The packer is lowered into the upper portion of the monitoring well, secured in place and inflated, providing a seal between the apparatus and the inside of the well. Two fittings are provided for pressure transducers: one transducer is fed through the inside of the device and positioned below the water surface and the other is inserted to measure the air pressure inside the assembly. A third fitting is connected to the pressurized air supply, a compressed air tank.

The datalogger will be programmed to display the air pressure in units of head, the head measured by the submerged transducer, and the difference between the two. The difference between the two pressure transducers is the height of the water column on the submerged transducer. The readings are recorded in a field notebook, and then the assembly is pressurized. The air pressure applied will be equivalent to 3 to 7 feet

of head. The pressures are allowed to stabilize. The pressure of the air should not lower the water level to below the base of the bentonite seal installed in the well.

Each test is started by releasing the air pressure inside the assembly and allowing the water level to rise to the static water level. When the datalogger perceives a change in water level in the well above a preset trigger amount, it automatically begins to record the water levels and elapsed time. Each test will be terminated when the water level has recovered to at least 90 percent of the original equilibrium level before pressurization. Note that the test method cannot be used if the well is screened across or near the water table.

An alternate method of lowering the water level is to use a solid displacement device. A single transducer will be installed in the well below the water table. A weighted solid displacement device is added to the well and the water level allowed to stabilize at the original static water level. The test is started by rapidly removing the displacement device, which causes a drop in the water level. The data logger begins recording the water level and elapsed time when the preset trigger amount is reached. Readings are taken as above, and the test stopped when the well has recovered to 90 percent of the original level.

At least two valid tests will be performed in each well. Additional tests will be required if there is some evidence that any of the tests were unacceptable.

At the end of each test, the test results will be transferred to a laptop and the data downloaded and checked for preliminary completeness.

IV. Attachments

None.

V. Key Checks and Preventive Maintenance

- Check that the packer assembly is in good condition and not leaking. Provide a repair kit including tape and clamps. Take additional packer assembly and other spare parts.
- Check the batteries for the datalogger and computer. Check that the computer disks containing the programs for the datalogger are packed.
- Check the datalogger calculation of the well hydraulic conductivity at the end of each test to determine if these are consistent with expectations.

STANDARD OPERATING PROCEDURE

Soil Sampling

I. Purpose and Scope

The purpose of this procedure is to provide guidelines for obtaining samples of surface and subsurface soils using hand and drilling-rig mounted equipment.

II. Equipment and Materials

- Stainless-steel trowel, shovel, scoop, coring device, hand auger, or other appropriate hand tool
- Stainless-steel, split-spoon samplers
- Thin-walled sampling tubes
- Drilling rig or soil-coring rig
- Stainless-steel pan/bowl or disposable sealable bags
- Sample bottles

III. Procedures and Guidelines

Before sampling begins, equipment will be decontaminated using the procedures described in SOP *Decontamination of Drilling Rigs and Equipment*. The sampling point is located and recorded in the field logbook. Debris should be cleared from the sampling location.

A. Surface and Shallow Subsurface Sampling

A shovel, post-hole digger, or other tool can be used to remove soil to a point just above the interval to be sampled. A decontaminated sampling tool will be used to collect the sample when the desired sampling depth has been reached. Soil for semivolatile organic and inorganic analyses is placed in the bowl and mixed; soil for volatile organic analysis is not mixed or composited but is placed directly into the appropriate sample bottles. A stainless-steel or dedicated wooden tongue depressor is used to transfer the sample from the bowl to the container.

The soils removed from the borehole should be visually described in the field log book, including approximated depths.

When sampling is completed, photo-ionization device (PID) readings should be taken directly above the hole, and the hole is then backfilled.

More details are provided in the SOP *Shallow Soil Sampling.*

B. Split-Spoon Sampling

Using a drilling rig, a hole is advanced to the desired depth. For split-spoon sampling, the samples are then collected following the ASTM D 1586 standard (attached). The sampler is lowered into the hole and driven to a depth equal to the total length of the sampler; typically this is 24 inches. The sampler is driven in 6-inch increments using a 140-pound weight ("hammer") dropped from a height of 30 inches. The number of hammer blows for each 6-inch interval is counted and recorded. To obtain enough volume of sample for subsequent laboratory analysis, use of a 3-inch ID sampler may be required. Blow counts obtained with a 3-inch ID spoon would not conform to ASTM D 1586 and would therefore not be used for geotechnical evaluations.

Once retrieved from the hole, the sampler is carefully split open. Care should be taken not to allow material in the sampler to fall out of the open end of the sampler. To collect the sample, the surface of the sample should be removed with a clean tool and disposed of. Samples collected for volatiles analysis should be placed directly into the sample containers from the desired depth in the split spoon. Material for samples for all other parameters should be removed to a decontaminated stainless steel tray or disposable sealable bag. The sample for semivolatile organic and inorganic analyses should be homogenized in the field by breaking the sample into small pieces and removing gravel. The homogenized sample should be placed in the sample containers. If sample volume requirements are not met by a single sample collection, additional sample volume may be obtained by collecting a sample from below the sample and compositing the sample for non-volatile parameters only.

Split-spoon samples also will be collected using a tripod rig. When using a tripod rig the soil samples are collected using an assembly similar to that used by the drilling rig.

C. Thin-Walled Tube Sampling

Undisturbed fine grained samples may be collected for analysis for geotechnical parameters such as vertical hydraulic conductivity. These samples will be collected using thin-walled sampling tubes (sometimes called Shelby tubes) according to ASTM D 1587 (attached). Tubes will be 24- to 36 inches long and 3- to 4-inches in diameter, depending upon the quantity of sample required. Undisturbed samples will be obtained by smoothly pressing the sampling tube through the interval to be sampled using the weight of the drilling rig. Jerking the sample should be avoided. Once the sample is brought to the surface, the ends will be sealed with bees wax and then sealed with end caps and heavy tape. The sample designation, data and time of sampling, and the up direction will be noted on the sampling tube. The tube shall be kept upright as much as possible and will be protected from freezing, which could disrupt the undisturbed nature of the sample. Samples for geochemical analysis normally are not collected from thin-walled tube samples.

IV. Attachments

ASTM D 1586 *Standard Penetration Test Method for Penetration Test and Split-Barrel Sampling of Soils* (ASTM D1586.pdf)

ASTM D 1587 *Standard Practice for Thin-Walled Tube Sampling of Soils* (ASTM D1587.pdf)

V. Key Checks and Preventative Maintenance

- Check that decontamination of equipment is thorough.
- Check that sample collection is swift to avoid loss of volatile organics during sampling.

Designation: D 1586 – 08

Standard Test Method for Standard Penetration Test (SPT) and Split-Barrel Sampling of Soils[1]

This standard is issued under the fixed designation D 1586; the number immediately following the designation indicates the year of original adoption or, in the case of revision, the year of last revision. A number in parentheses indicates the year of last reapproval. A superscript epsilon (ϵ) indicates an editorial change since the last revision or reapproval.

This standard has been approved for use by agencies of the Department of Defense.

1. Scope*

1.1 This test method describes the procedure, generally known as the Standard Penetration Test (SPT), for driving a split-barrel sampler to obtain a representative disturbed soil sample for identification purposes, and measure the resistance of the soil to penetration of the sampler. Another method (Test Method D 3550) to drive a split-barrel sampler to obtain a representative soil sample is available but the hammer energy is not standardized.

1.2 Practice D 6066 gives a guide to determining the normalized penetration resistance of sands for energy adjustments of N-value to a constant energy level for evaluating liquefaction potential.

1.3 Test results and identification information are used to estimate subsurface conditions for foundation design.

1.4 Penetration resistance testing is typically performed at 5-foot depth intervals or when a significant change of materials is observed during drilling, unless otherwise specified.

1.5 This test method is limited to use in nonlithified soils and soils whose maximum particle size is approximately less than one-half of the sampler diameter.

1.6 This test method involves use of rotary drilling equipment (Guide D 5783, Practice D 6151). Other drilling and sampling procedures (Guide D 6286, Guide D 6169) are available and may be more appropriate. Considerations for hand driving or shallow sampling without boreholes are not addressed. Subsurface investigations should be recorded in accordance with Practice D 5434. Samples should be preserved and transported in accordance with Practice D 4220 using Group B. Soil samples should be identified by group name and symbol in accordance with Practice D 2488.

1.7 All observed and calculated values shall conform to the guidelines for significant digits and rounding established in Practice D 6026, unless superseded by this test method.

1.8 The values stated in inch-pound units are to be regarded as standard, except as noted below. The values given in parentheses are mathematical conversions to SI units, which are provided for information only and are not considered standard.

1.8.1 The gravitational system of inch-pound units is used when dealing with inch-pound units. In this system, the pound (lbf) represents a unit of force (weight), while the unit for mass is slugs.

1.9 Penetration resistance measurements often will involve safety planning, administration, and documentation. This test method does not purport to address all aspects of exploration and site safety. *This standard does not purport to address all of the safety concerns, if any, associated with its use. It is the responsibility of the user of this standard to establish appropriate safety and health practices and determine the applicability of regulatory limitations prior to use.* Performance of the test usually involves use of a drill rig; therefore, safety requirements as outlined in applicable safety standards (for example, OSHA regulations,[2] NDA Drilling Safety Guide,[3] drilling safety manuals, and other applicable state and local regulations) must be observed.

2. Referenced Documents

2.1 *ASTM Standards:* [4]

D 653 Terminology Relating to Soil, Rock, and Contained Fluids

D 854 Test Methods for Specific Gravity of Soil Solids by Water Pycnometer

D 1587 Practice for Thin-Walled Tube Sampling of Soils for Geotechnical Purposes

D 2216 Test Methods for Laboratory Determination of Water (Moisture) Content of Soil and Rock by Mass

D 2487 Practice for Classification of Soils for Engineering Purposes (Unified Soil Classification System)

D 2488 Practice for Description and Identification of Soils

[1] This method is under the jurisdiction of ASTM Committee D18 on Soil and Rock and is the direct responsibility of Subcommittee D18.02 on Sampling and Related Field Testing for Soil Evaluations.

Current edition approved Feb. 1, 2008. Published March 2008. Originally approved in 1958. Last previous edition approved in 1999 as D 1586 – 99.

[2] Available from Occupational Safety and Health Administration (OSHA), 200 Constitution Ave., NW, Washington, DC 20210, http://www.osha.gov.

[3] Available from the National Drilling Association, 3511 Center Rd., Suite 8, Brunswick, OH 44212, http://www.nda4u.com.

[4] For referenced ASTM standards, visit the ASTM website, www.astm.org, or contact ASTM Customer Service at service@astm.org. For *Annual Book of ASTM Standards* volume information, refer to the standard's Document Summary page on the ASTM website.

***A Summary of Changes section appears at the end of this standard.**

Copyright © ASTM International, 100 Barr Harbor Drive, PO Box C700, West Conshohocken, PA 19428-2959, United States.

Copyright ASTM International
Provided by IHS under license with ASTM
No reproduction or networking permitted without license from IHS

Licensee=Herndon, VA/5960458008, User=Carter, Lisa
Not for Resale, 04/11/2008 08:08:12 MDT

(Visual-Manual Procedure)

D 3550 Practice for Thick Wall, Ring-Lined, Split Barrel, Drive Sampling of Soils

D 3740 Practice for Minimum Requirements for Agencies Engaged in the Testing and/or Inspection of Soil and Rock as Used in Engineering Design and Construction

D 4220 Practices for Preserving and Transporting Soil Samples

D 4633 Test Method for Energy Measurement for Dynamic Penetrometers

D 5434 Guide for Field Logging of Subsurface Explorations of Soil and Rock

D 5783 Guide for Use of Direct Rotary Drilling with Water-Based Drilling Fluid for Geoenvironmental Exploration and the Installation of Subsurface Water-Quality Monitoring Devices

D 6026 Practice for Using Significant Digits in Geotechnical Data

D 6066 Practice for Determining the Normalized Penetration Resistance of Sands for Evaluation of Liquefaction Potential

D 6151 Practice for Using Hollow-Stem Augers for Geotechnical Exploration and Soil Sampling

D 6169 Guide for Selection of Soil and Rock Sampling Devices Used With Drill Rigs for Environmental Investigations

D 6286 Guide for Selection of Drilling Methods for Environmental Site Characterization

D 6913 Test Methods for Particle-Size Distribution (Gradation) of Soils Using Sieve Analysis

3. Terminology

3.1 *Definitions:* Definitions of terms included in Terminology D 653 specific to this practice are:

3.1.1 *cathead, n*—the rotating drum or windlass in the rope-cathead lift system around which the operator wraps a rope to lift and drop the hammer by successively tightening and loosening the rope turns around the drum.

3.1.2 *drill rods, n*—rods used to transmit downward force and torque to the drill bit while drilling a borehole.

3.1.3 *N-value, n*—the blow count representation of the penetration resistance of the soil. The *N*-value, reported in blows per foot, equals the sum of the number of blows (*N*) required to drive the sampler over the depth interval of 6 to 18 in. (150 to 450 mm) (see 7.3).

3.1.4 *Standard Penetration Test (SPT), n*—a test process in the bottom of the borehole where a split-barrel sampler having an inside diameter of either 1-1/2-in. (38.1 mm) or 1-3/8-in. (34.9 mm) (see Note 2) is driven a given distance of 1.0 ft (0.30 m) after a seating interval of 0.5 ft (0.15 m) using a hammer weighing approximately 140-lbf (623-N) falling 30 ± 1.0 in. (0.76 m ± 0.030 m) for each hammer blow.

3.2 *Definitions of Terms Specific to This Standard:*

3.2.1 *anvil, n*—that portion of the drive-weight assembly which the hammer strikes and through which the hammer energy passes into the drill rods.

3.2.2 *drive weight assembly, n*—an assembly that consists of the hammer, anvil, hammer fall guide system, drill rod attachment system, and any hammer drop system hoisting attachments.

3.2.3 *hammer, n*—that portion of the drive-weight assembly consisting of the 140 ± 2 lbf (623 ± 9 N) impact weight which is successively lifted and dropped to provide the energy that accomplishes the sampling and penetration.

3.2.4 *hammer drop system, n*—that portion of the drive-weight assembly by which the operator or automatic system accomplishes the lifting and dropping of the hammer to produce the blow.

3.2.5 *hammer fall guide, n*—that part of the drive-weight assembly used to guide the fall of the hammer.

3.2.6 *number of rope turns, n*—the total contact angle between the rope and the cathead at the beginning of the operator's rope slackening to drop the hammer, divided by 360° (see Fig. 1).

3.2.7 *sampling rods, n*—rods that connect the drive-weight assembly to the sampler. Drill rods are often used for this purpose.

4. Significance and Use

4.1 This test method provides a disturbed soil sample for moisture content determination, for identification and classification (Practices D 2487 and D 2488) purposes, and for laboratory tests appropriate for soil obtained from a sampler that will produce large shear strain disturbance in the sample such as Test Methods D 854, D 2216, and D 6913. Soil deposits containing gravels, cobbles, or boulders typically result in penetration refusal and damage to the equipment.

4.2 This test method provides a disturbed soil sample for moisture content determination and laboratory identification. Sample quality is generally not suitable for advanced laboratory testing for engineering properties. The process of driving the sampler will cause disturbance of the soil and change the engineering properties. Use of the thin wall tube sampler (Practice D 1587) may result in less disturbance in soft soils. Coring techniques may result in less disturbance than SPT sampling for harder soils, but it is not always the case, that is, some cemented soils may become loosened by water action during coring; see Practice D 6151, and Guide D 6169.

4.3 This test method is used extensively in a great variety of geotechnical exploration projects. Many local correlations and widely published correlations which relate blow count, or *N*-value, and the engineering behavior of earthworks and foundations are available. For evaluating the liquefaction potential of sands during an earthquake event, the *N*-value should be normalized to a standard overburden stress level. Practice D 6066 provides methods to obtain a record of normalized resistance of sands to the penetration of a standard sampler driven by a standard energy. The penetration resistance is adjusted to drill rod energy ratio of 60 % by using a hammer system with either an estimated energy delivery or directly measuring drill rod stress wave energy using Test Method D 4633.

NOTE 1—The reliability of data and interpretations generated by this practice is dependent on the competence of the personnel performing it

ight ASTM International
ed by IHS under license with ASTM
production or networking permitted without license from IHS

Licensee=Herndon, VA/5960458008, User=Carter, Lisa
Not for Resale, 04/11/2008 08:08:12 MDT

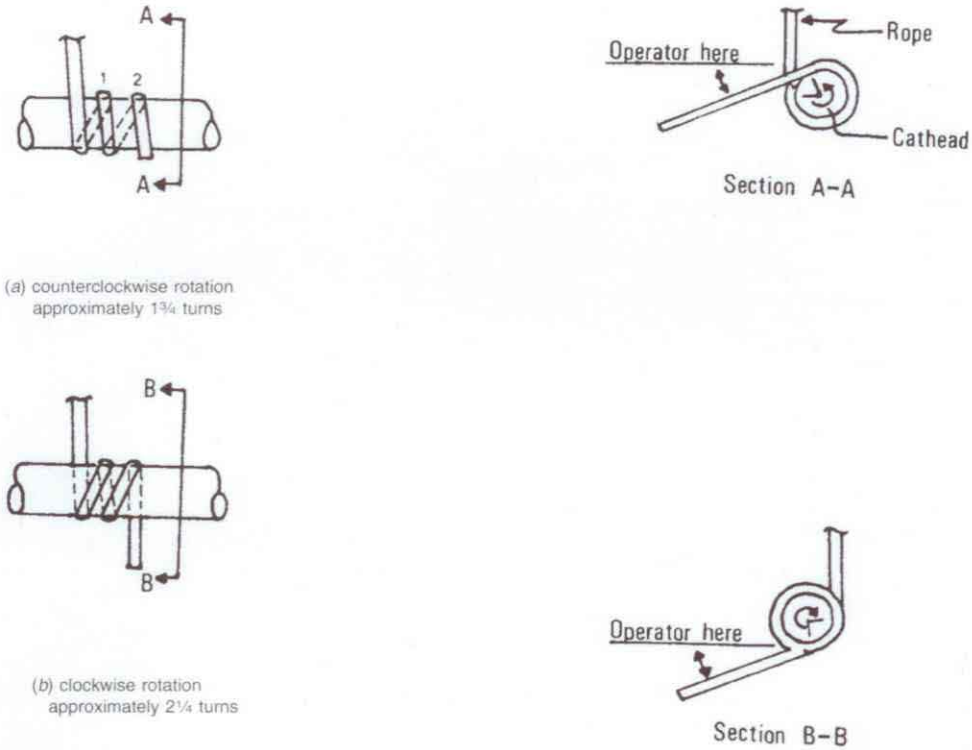

(*a*) counterclockwise rotation approximately 1¾ turns

(*b*) clockwise rotation approximately 2¼ turns

FIG. 1 Definitions of the Number of Rope Turns and the Angle for (*a*) Counterclockwise Rotation and (*b*) Clockwise Rotation of the Cathead

and the suitability of the equipment and facilities used. Agencies that meet the criteria of Practice D 3740 generally are considered capable of competent testing. Users of this practice are cautioned that compliance with Practice D 3740 does not assure reliable testing. Reliable testing depends on several factors and Practice D 3740 provides a means of evaluating some of these factors. Practice D 3740 was developed for agencies engaged in the testing, inspection, or both, of soils and rock. As such, it is not totally applicable to agencies performing this practice. Users of this test method should recognize that the framework of Practice D 3740 is appropriate for evaluating the quality of an agency performing this test method. Currently, there is no known qualifying national authority that inspects agencies that perform this test method.

5. Apparatus

5.1 *Drilling Equipment*—Any drilling equipment that provides at the time of sampling a suitable borehole before insertion of the sampler and ensures that the penetration test is performed on undisturbed soil shall be acceptable. The following pieces of equipment have proven to be suitable for advancing a borehole in some subsurface conditions:

5.1.1 *Drag, Chopping, and Fishtail Bits*, less than 6½ in. (165 mm) and greater than 2¼ in. (57 mm) in diameter may be used in conjunction with open-hole rotary drilling or casing-advancement drilling methods. To avoid disturbance of the underlying soil, bottom discharge bits are not permitted; only side discharge bits are permitted.

5.1.2 *Roller-Cone Bits*, less than 6½ in. (165 mm) and greater than 2¼ in. (57 mm) in diameter may be used in conjunction with open-hole rotary drilling or casing-advancement drilling methods if the drilling fluid discharge is deflected.

5.1.3 *Hollow-Stem Continuous Flight Augers*, with or without a center bit assembly, may be used to drill the borehole. The inside diameter of the hollow-stem augers shall be less than 6½ in. (165 mm) and not less than 2¼ in. (57 mm).

5.1.4 *Solid, Continuous Flight, Bucket and Hand Augers*, less than 6½ in. (165 mm) and not less than 2¼ in. (57 mm) in diameter may be used if the soil on the side of the borehole does not cave onto the sampler or sampling rods during sampling.

5.2 *Sampling Rods*—Flush-joint steel drill rods shall be used to connect the split-barrel sampler to the drive-weight assembly. The sampling rod shall have a stiffness (moment of inertia) equal to or greater than that of parallel wall "A" rod (a steel rod that has an outside diameter of 1-5/8 in. (41.3 mm) and an inside diameter of 1-1/8 in. (28.5 mm).

5.3 *Split-Barrel Sampler*—The standard sampler dimensions are shown in Fig. 2. The sampler has an outside diameter of 2.00 in. (50.8 mm). The inside diameter of the of the split-barrel (dimension D in Fig. 2) can be either 1½-in. (38.1

Copyright ASTM International
Provided by IHS under license with ASTM
No reproduction or networking permitted without license from IHS
Licensee=Herndon, VA/5960458008, User=Carter, Lisa
Not for Resale, 04/11/2008 08:08:12 MDT

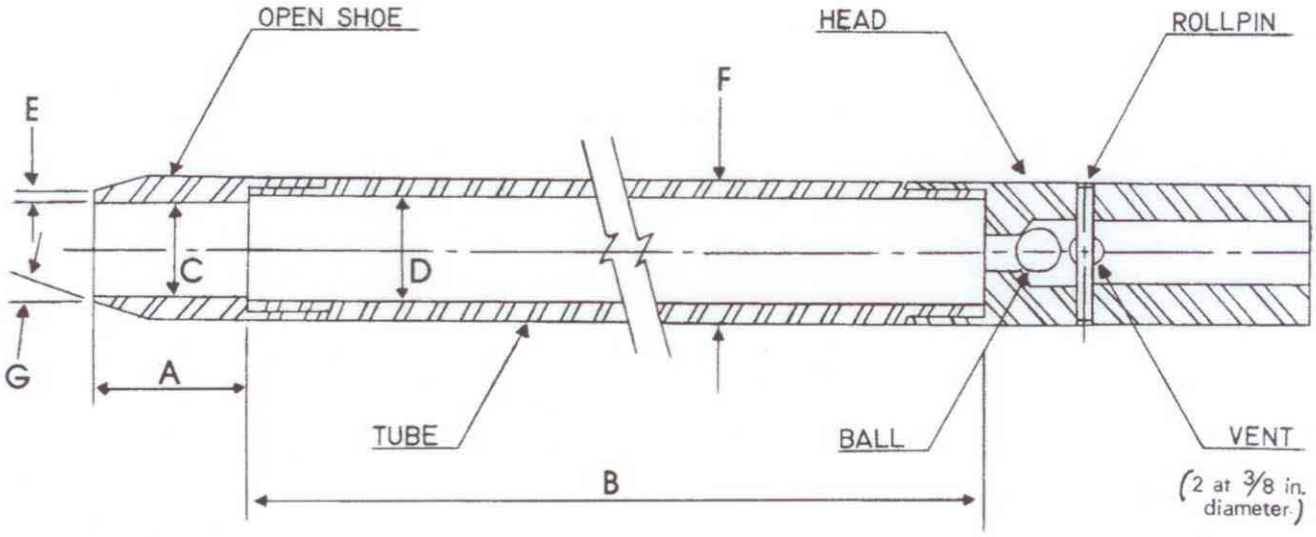

A = 1.0 to 2.0 in. (25 to 50 mm)
B = 18.0 to 30.0 in. (0.457 to 0.762 m)
C = 1.375 ± 0.005 in. (34.93 ± 0.13 mm)
D = 1.50 ± 0.05 – 0.00 in. (38.1 ± 1.3 – 0.0 mm)
E = 0.10 ± 0.02 in. (2.54 ± 0.25 mm)
F = 2.00 ± 0.05 – 0.00 in. (50.8 ± 1.3 – 0.0 mm)
G = 16.0° to 23.0°

FIG. 2 Split-Barrel Sampler

mm) or 1⅜-in. (34.9 mm) (see Note 2). A 16-gauge liner can be used inside the 1½-in. (38.1 mm) split barrel sampler. The driving shoe shall be of hardened steel and shall be replaced or repaired when it becomes dented or distorted. The penetrating end of the drive shoe may be slightly rounded. The split-barrel sampler must be equipped with a ball check and vent. Metal or plastic baskets may be used to retain soil samples.

NOTE 2—Both theory and available test data suggest that *N*-values may differ as much as 10 to 30 % between a constant inside diameter sampler and upset wall sampler. If it is necessary to correct for the upset wall sampler refer to Practice D 6066. In North America, it is now common practice to use an upset wall sampler with an inside diameter of 1½ in. At one time, liners were used but practice evolved to use the upset wall sampler without liners. Use of an upset wall sampler allows for use of retainers if needed, reduces inside friction, and improves recovery. Many other countries still use a constant ID split-barrel sampler, which was the original standard and still acceptable within this standard.

5.4 *Drive-Weight Assembly*:

5.4.1 *Hammer and Anvil*—The hammer shall weigh 140 ± 2 lbf (623 ± 9 N) and shall be a rigid metallic mass. The hammer shall strike the anvil and make steel on steel contact when it is dropped. A hammer fall guide permitting an unimpeded fall shall be used. Fig. 3 shows a schematic of such hammers. Hammers used with the cathead and rope method shall have an unimpeded over lift capacity of at least 4 in. (100 mm). For safety reasons, the use of a hammer assembly with an internal anvil is encouraged as shown in Fig. 3. The total mass of the hammer assembly bearing on the drill rods should not be more than 250 ± 10 lbm (113 ± 5 kg).

NOTE 3—It is suggested that the hammer fall guide be permanently marked to enable the operator or inspector to judge the hammer drop height.

5.4.2 *Hammer Drop System*—Rope-cathead, trip, semi-automatic or automatic hammer drop systems, as shown in Fig. 4 may be used, providing the lifting apparatus will not cause penetration of the sampler while re-engaging and lifting the hammer.

5.5 *Accessory Equipment*—Accessories such as labels, sample containers, data sheets, and groundwater level measuring devices shall be provided in accordance with the requirements of the project and other ASTM standards.

6. Drilling Procedure

6.1 The borehole shall be advanced incrementally to permit intermittent or continuous sampling. Test intervals and locations are normally stipulated by the project engineer or geologist. Typically, the intervals selected are 5 ft (1.5 m) or less in homogeneous strata with test and sampling locations at every change of strata. Record the depth of drilling to the nearest 0.1 ft (0.030 m).

6.2 Any drilling procedure that provides a suitably clean and stable borehole before insertion of the sampler and assures that the penetration test is performed on essentially undisturbed soil shall be acceptable. Each of the following procedures has proven to be acceptable for some subsurface conditions. The subsurface conditions anticipated should be considered when selecting the drilling method to be used.

6.2.1 Open-hole rotary drilling method.

6.2.2 Continuous flight hollow-stem auger method.

6.2.3 Wash boring method.

6.2.4 Continuous flight solid auger method.

6.3 Several drilling methods produce unacceptable boreholes. The process of jetting through an open tube sampler and

Copyright ASTM International
Provided by IHS under license with ASTM
No reproduction or networking permitted without license from IHS

Licensee=Herndon, VA/5960458008, User=Carter, Lisa
Not for Resale, 04/11/2008 08:08:12 MDT

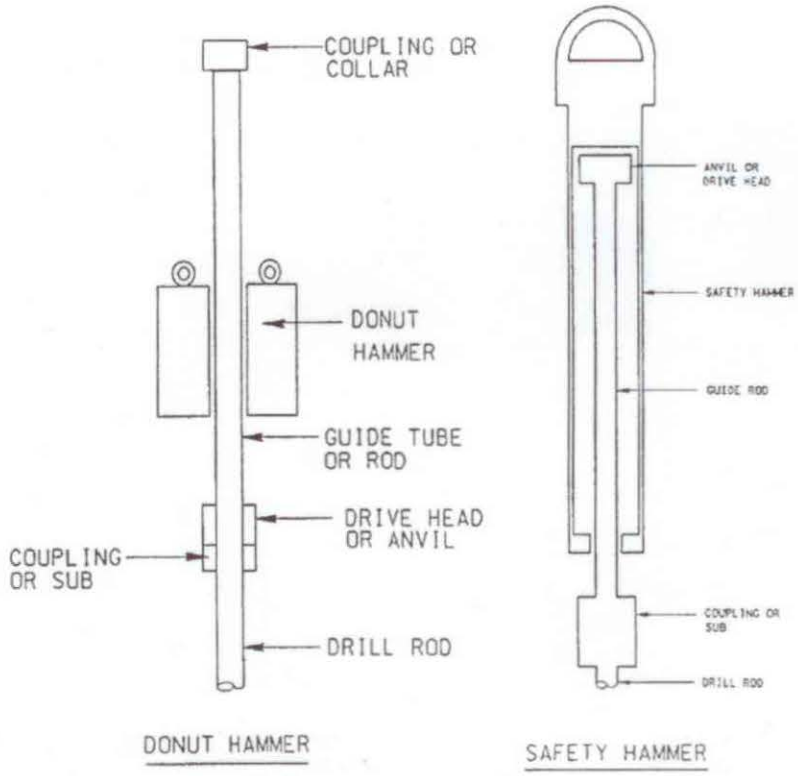

FIG. 3 Schematic Drawing of the Donut Hammer and Safety Hammer

then sampling when the desired depth is reached shall not be permitted. The continuous flight solid auger method shall not be used for advancing the borehole below a water table or below the upper confining bed of a confined non-cohesive stratum that is under artesian pressure. Casing may not be advanced below the sampling elevation prior to sampling. Advancing a borehole with bottom discharge bits is not permissible. It is not permissible to advance the borehole for subsequent insertion of the sampler solely by means of previous sampling with the SPT sampler.

6.4 The drilling fluid level within the borehole or hollow-stem augers shall be maintained at or above the in situ groundwater level at all times during drilling, removal of drill rods, and sampling.

7. Sampling and Testing Procedure

7.1 After the borehole has been advanced to the desired sampling elevation and excessive cuttings have been removed, record the cleanout depth to the nearest 0.1 ft (0.030 m), and prepare for the test with the following sequence of operations:

7.1.1 Attach either split-barrel sampler Type A or B to the sampling rods and lower into the borehole. Do not allow the sampler to drop onto the soil to be sampled.

7.1.2 Position the hammer above and attach the anvil to the top of the sampling rods. This may be done before the sampling rods and sampler are lowered into the borehole.

7.1.3 Rest the dead weight of the sampler, rods, anvil, and drive weight on the bottom of the borehole. Record the sampling start depth to the nearest 0.1 ft (0.030 m). Compare the sampling start depth to the cleanout depth in 7.1. If excessive cuttings are encountered at the bottom of the borehole, remove the sampler and sampling rods from the borehole and remove the cuttings.

7.1.4 Mark the drill rods in three successive 0.5-foot (0.15 m) increments so that the advance of the sampler under the impact of the hammer can be easily observed for each 0.5-foot (0.15 m) increment.

7.2 Drive the sampler with blows from the 140-lbf (623-N) hammer and count the number of blows applied in each 0.5-foot (0.15-m) increment until one of the following occurs:

7.2.1 A total of 50 blows have been applied during any one of the three 0.5-foot (0.15-m) increments described in 7.1.4.

7.2.2 A total of 100 blows have been applied.

7.2.3 There is no observed advance of the sampler during the application of 10 successive blows of the hammer.

7.2.4 The sampler is advanced the complete 1.5 ft. (0.45 m) without the limiting blow counts occurring as described in 7.2.1, 7.2.2, or 7.2.3.

7.2.5 If the sampler sinks under the weight of the hammer, weight of rods, or both, record the length of travel to the nearest 0.1 ft (0.030 m), and drive the sampler through the remainder of the test interval. If the sampler sinks the complete interval, stop the penetration, remove the sampler and sampling rods from the borehole, and advance the borehole through the very soft or very loose materials to the next desired sampling elevation. Record the *N*-value as either weight of hammer, weight of rods, or both.

Copyright ASTM International
Provided by IHS under license with ASTM
No reproduction or networking permitted without license from IHS

Licensee=Herndon, VA/5960458008, User=Carter, Lisa
Not for Resale, 04/11/2008 08:08:12 MDT

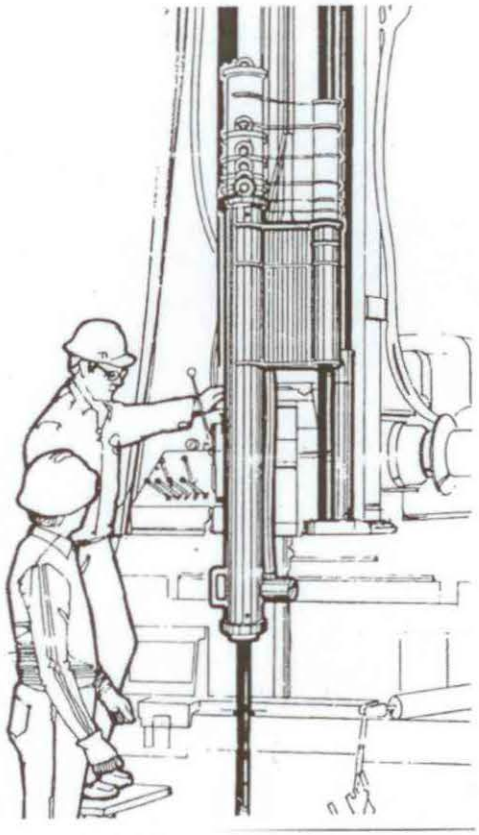

FIG. 4 Automatic Trip Hammer

7.3 Record the number of blows (*N*) required to advance the sampler each 0.5-foot (0.15 m) of penetration or fraction thereof. The first 0.5-foot (0.15 m) is considered to be a seating drive. The sum of the number of blows required for the second and third 0.5-foot (0.15 m) of penetration is termed the "standard penetration resistance," or the "*N*-value." If the sampler is driven less than 1.5 ft (0.45 m), as permitted in 7.2.1, 7.2.2, or 7.2.3, the number of blows per each complete 0.5-foot (0.15 m) increment and per each partial increment shall be recorded on the boring log. For partial increments, the depth of penetration shall be reported to the nearest 0.1 ft (0.030 m) in addition to the number of blows. If the sampler advances below the bottom of the borehole under the static weight of the drill rods or the weight of the drill rods plus the static weight of the hammer, this information should be noted on the boring log.

7.4 The raising and dropping of the 140-lbf (623-N) hammer shall be accomplished using either of the following two methods. Energy delivered to the drill rod by either method can be measured according to procedures in Test Method D 4633.

7.4.1 *Method A*—By using a trip, automatic, or semi-automatic hammer drop system that lifts the 140-lbf (623-N) hammer and allows it to drop 30 ± 1.0 in. (0.76 m ± 0.030 m) with limited unimpedence. Drop heights adjustments for automatic and trip hammers should be checked daily and at first indication of variations in performance. Operation of automatic hammers shall be in strict accordance with operations manuals.

7.4.2 *Method B*—By using a cathead to pull a rope attached to the hammer. When the cathead and rope method is used the system and operation shall conform to the following:

7.4.2.1 The cathead shall be essentially free of rust, oil, or grease and have a diameter in the range of 6 to 10 in. (150 to 250 mm).

7.4.2.2 The cathead should be operated at a minimum speed of rotation of 100 RPM.

7.4.2.3 The operator should generally use either 1-3/4 or 2-1/4 rope turns on the cathead, depending upon whether or not the rope comes off the top (1-3/4 turns for counterclockwise rotation) or the bottom (2-1/4 turns for clockwise rotation) of the cathead during the performance of the penetration test, as shown in Fig. 1. It is generally known and accepted that 2-3/4 or more rope turns considerably impedes the fall of the hammer and should not be used to perform the test. The cathead rope should be stiff, relatively dry, clean, and should be replaced when it becomes excessively frayed, oily, limp, or burned.

7.4.2.4 For each hammer blow, a 30 ± 1.0 in. (0.76 m ± 0.030 m) lift and drop shall be employed by the operator. The operation of pulling and throwing the rope shall be performed rhythmically without holding the rope at the top of the stroke.

NOTE 4—If the hammer drop height is something other than 30 ± 1.0 in. (0.76 m ± 0.030 m), then record the new drop height. For soils other than sands, there is no known data or research that relates to adjusting the *N*-value obtained from different drop heights. Test method D 4633 provides information on making energy measurement for variable drop

Copyright ASTM International
Provided by IHS under license with ASTM
No reproduction or networking permitted without license from IHS

Licensee=Herndon, VA/5960458008, User=Carter, Lisa
Not for Resale, 04/11/2008 08:08:12 MDT

heights and Practice D 6066 provides information on adjustment of *N*-value to a constant energy level (60 % of theoretical, N60). Practice D 6066 allows the hammer drop height to be adjusted to provide 60 % energy.

7.5 Bring the sampler to the surface and open. Record the percent recovery to the nearest 1 % or the length of sample recovered to the nearest 0.01 ft (5 mm). Classify the soil samples recovered as to, in accordance with Practice D 2488, then place one or more representative portions of the sample into sealable moisture-proof containers (jars) without ramming or distorting any apparent stratification. Seal each container to prevent evaporation of soil moisture. Affix labels to the containers bearing job designation, boring number, sample depth, and the blow count per 0.5-foot (0.15-m) increment. Protect the samples against extreme temperature changes. If there is a soil change within the sampler, make a jar for each stratum and note its location in the sampler barrel. Samples should be preserved and transported in accordance with Practice D 4220 using Group B.

8. Data Sheet(s)/Form(s)

8.1 Data obtained in each borehole shall be recorded in accordance with the Subsurface Logging Guide D 5434 as required by the exploration program. An example of a sample data sheet is included in Appendix X1.

8.2 Drilling information shall be recorded in the field and shall include the following:

8.2.1 Name and location of job,

8.2.2 Names of crew,

8.2.3 Type and make of drilling machine,

8.2.4 Weather conditions,

8.2.5 Date and time of start and finish of borehole,

8.2.6 Boring number and location (station and coordinates, if available and applicable),

8.2.7 Surface elevation, if available,

8.2.8 Method of advancing and cleaning the borehole,

8.2.9 Method of keeping borehole open,

8.2.10 Depth of water surface to the nearest 0.1 ft (0.030 m) and drilling depth to the nearest 0.1 ft (0.030 m) at the time of a noted loss of drilling fluid, and time and date when reading or notation was made,

8.2.11 Location of strata changes, to the nearest 0.5 ft (15 cm),

8.2.12 Size of casing, depth of cased portion of borehole to the nearest 0.1 ft (0.030 m),

8.2.13 Equipment and Method A or B of driving sampler,

8.2.14 Sampler length and inside diameter of barrel, and if a sample basket retainer is used,

8.2.15 Size, type, and section length of the sampling rods, and

8.2.16 Remarks.

8.3 Data obtained for each sample shall be recorded in the field and shall include the following:

8.3.1 Top of sample depth to the nearest 0.1 ft (0.030 m) and, if utilized, the sample number,

8.3.2 Description of soil,

8.3.3 Strata changes within sample,

8.3.4 Sampler penetration and recovery lengths to the nearest 0.1 ft (0.030 m), and

8.3.5 Number of blows per 0.5 foot (0.015 m) or partial increment.

9. Precision and Bias

9.1 *Precision*—Test data on precision is not presented due to the nature of this test method. It is either not feasible or too costly at this time to have ten or more agencies participate in an in situ testing program at a given site.

9.1.1 The Subcommittee 18.02 is seeking additional data from the users of this test method that might be used to make a limited statement on precision. Present knowledge indicates the following:

9.1.1.1 Variations in *N*-values of 100 % or more have been observed when using different standard penetration test apparatus and drillers for adjacent boreholes in the same soil formation. Current opinion, based on field experience, indicates that when using the same apparatus and driller, *N*-values in the same soil can be reproduced with a coefficient of variation of about 10 %.

9.1.1.2 The use of faulty equipment, such as an extremely massive or damaged anvil, a rusty cathead, a low speed cathead, an old, oily rope, or massive or poorly lubricated rope sheaves can significantly contribute to differences in *N*-values obtained between operator-drill rig systems.

9.2 *Bias*—There is no accepted reference value for this test method, therefore, bias cannot be determined.

10. Keywords

10.1 blow count; in-situ test; penetration resistance; soil; split-barrel sampling; standard penetration test

Copyright ASTM International
Provided by IHS under license with ASTM
No reproduction or networking permitted without license from IHS

Licensee=Herndon, VA/5960458008, User=Carter, Lisa
Not for Resale, 04/11/2008 08:08:12 MDT

APPENDIX

(Nonmandatory Information)

X1. Example Data Sheet

X1.1 See Fig. 5.

ight ASTM International
ied by IHS under license with ASTM
production or networking permitted without license from IHS

Licensee=Herndon, VA/5960458008, User=Carter, Lisa
Not for Resale, 04/11/2008 08:08:12 MDT

DRILLERS BORING LOG

Project: _____ Project No: _____ Boring No: _____

Location: _____ Sheet _____ of _____

Date Started _____ Date Completed _____

Drill Crew:

Boring Location
Station _____ Offset _____

Elevation

Strata Depth		Soil Description and Remarks	Sample Type	No.	Depth		Recovery	N-Values		
From	To				From	To		6"	6"	6"

Drill Rig Type _____

Method Of Drilling:

Auger _____ Size _____

Wash _____ Water _____ Mud _____

Hammer Type

Auto _____ Manual _____

Split-Spoon Type

Length _____ Liner Used _____

Boring Size _____ Bit Used _____

Casing Size _____ Length _____

Weather _____

Non-Drilling Time (Hrs.)

Boring Layout _____ Moving _____

Hauling Water _____ Standby _____

Water Level @ _____ Date _____ Time _____

@ _____ Date _____ Time _____

@ _____ Date _____ Time _____

Cave-in Depth

@ _____ Date _____ Time _____

FIG. 5 Example Data Sheet

Copyright ASTM International
Provided by IHS under license with ASTM
No reproduction or networking permitted without license from IHS

Licensee=Herndon, VA/5960458008, User=Carter, Lisa
Not for Resale, 04/11/2008 08:08:12 MDT

SUMMARY OF CHANGES

Committee D18 has identified the location of selected changes to this standard since the last issue (D 1586 – 99) that may impact the use of this standard. (Approved February 1, 2008.)

(*1*) There have been numerous changes to this standard to list them separately. From the most recent main ballot process, additional changes were requested and incorporated into this newest revision. Stated below is a highlight of some of the changes.

(*2*) Scope was completely revised.

(*3*) Referenced Documents updated to include new standards.

(*4*) Terminology: added section on Definitions.

(*5*) Significance and Use: clarified use of the SPT test.

(*6*) Apparatus: general editorial changes.

(*7*) Sampling and Testing Procedure: general editorial changes.

(*8*) Data Sheets/Forms: general editorial changes.

(*9*) Precision and Bias: added Sections 9.1.1.1 and 9.1.1.2.

ASTM International takes no position respecting the validity of any patent rights asserted in connection with any item mentioned in this standard. Users of this standard are expressly advised that determination of the validity of any such patent rights, and the risk of infringement of such rights, are entirely their own responsibility.

This standard is subject to revision at any time by the responsible technical committee and must be reviewed every five years and if not revised, either reapproved or withdrawn. Your comments are invited either for revision of this standard or for additional standards and should be addressed to ASTM International Headquarters. Your comments will receive careful consideration at a meeting of the responsible technical committee, which you may attend. If you feel that your comments have not received a fair hearing you should make your views known to the ASTM Committee on Standards, at the address shown below.

This standard is copyrighted by ASTM International, 100 Barr Harbor Drive, PO Box C700, West Conshohocken, PA 19428-2959, United States. Individual reprints (single or multiple copies) of this standard may be obtained by contacting ASTM at the above address or at 610-832-9585 (phone), 610-832-9555 (fax), or service@astm.org (e-mail); or through the ASTM website (www.astm.org).

Copyright ASTM International
Provided by IHS under license with ASTM
No reproduction or networking permitted without license from IHS

Licensee=Herndon, VA/5960458008, User=Carter, Lisa
Not for Resale, 04/11/2008 08:08:12 MDT

Designation: D 1587 – 00 (Reapproved 2007)$^{\epsilon 1}$

Standard Practice for Thin-Walled Tube Sampling of Soils for Geotechnical Purposes[1]

This standard is issued under the fixed designation D 1587; the number immediately following the designation indicates the year of original adoption or, in the case of revision, the year of last revision. A number in parentheses indicates the year of last reapproval. A superscript epsilon (ε) indicates an editorial change since the last revision or reapproval.

This standard has been approved for use by agencies of the Department of Defense.

ϵ^1 NOTE—Editorial changes were made in June 2007.

1. Scope*

1.1 This practice covers a procedure for using a thin-walled metal tube to recover relatively undisturbed soil samples suitable for laboratory tests of engineering properties, such as strength, compressibility, permeability, and density. Thin-walled tubes used in piston, plug, or rotary-type samplers should comply with Section 6.3 of this practice which describes the thin-walled tubes.

NOTE 1—This practice does not apply to liners used within the samplers.

1.2 This Practice is limited to soils that can be penetrated by the thin-walled tube. This sampling method is not recommended for sampling soils containing gravel or larger size soil particles cemented or very hard soils. Other soil samplers may be used for sampling these soil types. Such samplers include driven split barrel samplers and soil coring devices (D 1586, D 3550, and D 6151). For information on appropriate use of other soil samplers refer to D 6169.

1.3 This practice is often used in conjunction with fluid rotary drilling (D 1452, D 5783) or hollow-stem augers (D 6151). Subsurface geotechnical explorations should be reported in accordance with practice (D 5434). This practice discusses some aspects of sample preservation after the sampling event. For information on preservation and transportation process of soil samples, consult Practice D 4220. This practice does not address environmental sampling; consult D 6169 and D 6232for information on sampling for environmental investigations.

1.4 The values stated in inch-pound units are to be regarded as the standard. The SI values given in parentheses are provided for information purposes only. The tubing tolerances presented in Table 1 are from sources available in North America. Use of metric equivalent is acceptable as long as thickness and proportions are similar to those required in this standard.

1.5 *This standard does not purport to address all of the safety concerns, if any, associated with its use. It is the responsibility of the user of this standard to establish appropriate safety and health practices and determine the applicability of regulatory limitations prior to use.*

1.6 This practice offers a set of instructions for performing one or more specific operations. This document cannot replace education or experience and should be used in conjunction with professional judgment. Not all aspects of this practice may be applicable in all circumstances. This ASTM standard is not intended to represent or replace the standard of care by which the adequacy of a given professional service must be judged, nor should this document be applied without consideration of a project's many unique aspects. The word "Standard" in the title of this document means only that the document has been approved through the ASTM consensus process.

2. Referenced Documents

2.1 *ASTM Standards:* [2]

D 653 Terminology Relating to Soil, Rock, and Contained Fluids

D 1452 Practice for Soil Investigation and Sampling by Auger Borings

D 1586 Test Method for Penetration Test and Split-Barrel Sampling of Soils

D 2488 Practice for Description and Identification of Soils (Visual-Manual Procedure)

D 3550 Practice for Thick Wall, Ring-Lined, Split Barrel, Drive Sampling of Soils

D 3740 Practice for Minimum Requirements for Agencies Engaged in the Testing and/or Inspection of Soil and Rock

[1] This practice is under the jurisdiction of ASTM Committee D18 on Soil and Rock and is the direct responsibility of Subcommittee D18.02 on Sampling and Related Field Testing for Soil Evaluations.

Current edition approved May 1, 2007. Published July 2007. Originally approved in 1958. Last previous edition approved in 2003 as D 1587 – 03.

[2] For referenced ASTM standards, visit the ASTM website, www.astm.org, or contact ASTM Customer Service at service@astm.org. For *Annual Book of ASTM Standards* volume information, refer to the standard's Document Summary page on the ASTM website.

***A Summary of Changes section appears at the end of this standard.**

Copyright © ASTM International, 100 Barr Harbor Drive, PO Box C700, West Conshohocken, PA 19428-2959, United States.

Copyright ASTM International
Provided by IHS under license with ASTM
No reproduction or networking permitted without license from IHS

Licensee=Herndon, VA/5960458008, User=Carter, Lisa
Not for Resale, 04/11/2008 08:09:30 MDT

TABLE 1 Dimensional Tolerances for Thin-Walled Tubes

Nominal Tube Diameters from Table 2[A] Tolerances						
Size Outside Diameter	2 in.	50.8 mm	3 in.	76.2 mm	5 in.	127 mm
Outside diameter, D_o	+0.007	+0.179	+0.010	+0.254	+0.015	0.381
	-0.000	-0.000	-0.000	-0.000	-0.000	-0.000
Inside diameter, D_i	+0.000	+0.000	+0.000	+0.000	+0.000	+0.000
	-0.007	-0.179	-0.010	-0.254	-0.015	-0.381
Wall thickness	±0.007	±0.179	±0.010	±0.254	±0.015	±0.381
Ovality	0.015	0.381	0.020	0.508	0.030	0.762
Straightness	0.030/ft	2.50/m	0.030/ft	2.50/m	0.030/ft	2.50/m

[A] Intermediate or larger diameters should be proportional. Specify only two of the first three tolerances; that is, D_o and D_i, or D_o and Wall thickness, or D_i and Wall thickness.

as Used in Engineering Design and Construction

D 4220 Practices for Preserving and Transporting Soil Samples

D 5434 Guide for Field Logging of Subsurface Explorations of Soil and Rock

D 5783 Guide for Use of Direct Rotary Drilling with Water-Based Drilling Fluid for Geoenvironmental Exploration and the Installation of Subsurface Water-Quality Monitoring Devices

D 6151 Practice for Using Hollow-Stem Augers for Geotechnical Exploration and Soil Sampling

D 6169 Guide for Selection of Soil and Rock Sampling Devices Used With Drill Rigs for Environmental Investigations

D 6232 Guide for Selection of Sampling Equipment for Waste and Contaminated Media Data Collection Activities

3. Terminology

3.1 *Definitions:*

3.1.1 For common definitions of terms in this standard, refer to Terminology D 653.

3.2 *Definitions of Terms Specific to This Standard:*

3.2.1 *inside clearance ratio, %, n*—the ratio of the difference in the inside diameter of the tube, D_i, minus the inside diameter of the cutting edge, D_e, to the inside diameter of the tube, D_i expressed as a percentage (see Fig. 1).

3.2.2 *ovality, n*—the cross section of the tube that deviates from a perfect circle.

4. Summary of Practice

4.1 A relatively undisturbed sample is obtained by pressing a thin-walled metal tube into the in-situ soil at the bottom of a boring, removing the soil-filled tube, and applying seals to the soil surfaces to prevent soil movement and moisture gain or loss.

5. Significance and Use

5.1 This practice, or Practice D 3550 with thin wall shoe, is used when it is necessary to obtain a relatively undisturbed specimen suitable for laboratory tests of engineering properties or other tests that might be influenced by soil disturbance.

NOTE 2—The quality of the result produced by this standard is dependent on the competence of the personnel performing it, and the suitability of the equipment and facilities used. Agencies that meet the criteria of Practice D 3740 are generally considered capable of competent and objective sampling. Users of this practice. are cautioned that compliance with Practice D 3740 does not in itself assure reliable results. Reliable results depend on many factors; Practice D 3740 provides a means of evaluating some of those factors.

6. Apparatus

6.1 *Drilling Equipment*—When sampling in a boring, any drilling equipment may be used that provides a reasonably

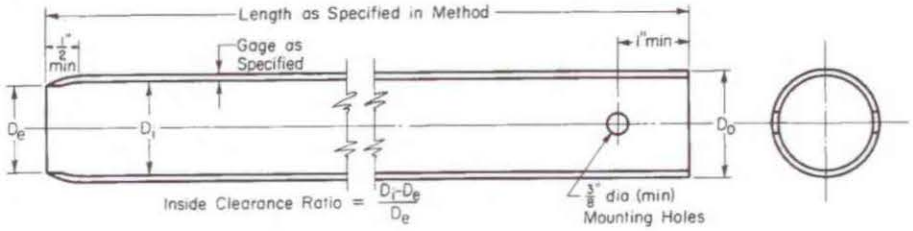

NOTE 1—Minimum of two mounting holes on opposite sides for D_o smaller than 4 in. (101.6 mm).

NOTE 2—Minimum of four mounting holes equally spaced for D_o 4 in. (101.6 mm) and larger.

NOTE 3—Tube held with hardened screws or other suitable means.

NOTE 4—2-in (50.8 mm) outside-diameter tubes are specified with an 18-gage wall thickness to comply with area ratio criteria accepted for "undisturbed samples." Users are advised that such tubing is difficult to locate and can be extremely expensive in small quantities. Sixteen-gage tubes are generally readily available.

Metric Equivalent Conversions

in.	mm
3/8	9.53
1/2	12.7
1	25.4
2	50.8
3	76.2
4	101.6
5	127

FIG. 1 Thin-Walled Tube for Sampling

Copyright ASTM International
Provided by IHS under license with ASTM
No reproduction or networking permitted without license from IHS

Licensee=Herndon, VA/5960458008, User=Carter, Lisa
Not for Resale, 04/11/2008 08:09:30 MDT

TABLE 2 Suitable Thin-Walled Steel Sample Tubes[A]

Outside diameter (D_o):			
in.	2	3	5
mm	50.8	76.2	127
Wall thickness:			
Bwg	18	16	11
in.	0.049	0.065	0.120
mm	1.24	1.65	3.05
Tube length:			
in.	36	36	54
m	0.91	0.91	1.45
Inside clearance ratio, %	<1	<1	<1

[A] The three diameters recommended in Table 2 are indicated for purposes of standardization, and are not intended to indicate that sampling tubes of intermediate or larger diameters are not acceptable. Lengths of tubes shown are illustrative. Proper lengths to be determined as suited to field conditions.

clean hole; that minimizes disturbance of the soil to be sampled; and that does not hinder the penetration of the thin-walled sampler. Open borehole diameter and the inside diameter of driven casing or hollow stem auger shall not exceed 3.5 times the outside diameter of the thin-walled tube.

6.2 *Sampler Insertion Equipment*, shall be adequate to provide a relatively rapid continuous penetration force. For hard formations it may be necessary, although not recommended, to drive the thin-walled tube sampler.

6.3 *Thin-Walled Tubes*, should be manufactured to the dimensions as shown in Fig. 1. They should have an outside diameter of 2 to 5 in. (50 to 130 mm) and be made of metal having adequate strength for the type of soil to be sampled. Tubes shall be clean and free of all surface irregularities including projecting weld seams. Other diameters may be used but the tube dimensions should be proportional to the tube designs presented here.

6.3.1 *Length of Tubes*—See Table 2 and 7.4.1.

6.3.2 *Tolerances*, shall be within the limits shown in Table 1.

6.3.3 *Inside Clearance Ratio*, should be not greater than 1 % unless specified otherwise for the type of soil to be sampled. Generally, the inside clearance ratio used should increase with the increase in plasticity of the soil being sampled, except for sensitive soils or where local experience indicates otherwise. See 3.2.1 and Fig. 1 for definition of inside clearance ratio.

6.3.4 *Corrosion Protection*—Corrosion, whether from galvanic or chemical reaction, can damage or destroy both the thin-walled tube and the sample. Severity of damage is a function of time as well as interaction between the sample and the tube. Thin-walled tubes should have some form of protective coating, unless the soil is to be extruded less than 3 days. The type of coating to be used may vary depending upon the material to be sampled. Plating of the tubes or alternate base metals may be specified. Galvanized tubes are often used when long term storage is required. Coatings may include a light coat of lubricating oil, lacquer, epoxy, Teflon, zinc oxide, and others.

NOTE 3—Most coating materials are not resistant to scratching by soils that contain sands. Consideration should be given for prompt testing of the sample because chemical reactions between the metal and the soil sample con occur with time.

6.4 *Sampler Head*, serves to couple the thin-walled tube to the insertion equipment and, together with the thin-walled tube, comprises the thin-walled tube sampler. The sampler head shall contain a venting area and suitable check valve with the venting area to the outside equal to or greater than the area through the check valve. In some special cases, a check valve may not be required but venting is required to avoid sample compression. Attachment of the head to the tube shall be concentric and coaxial to assure uniform application of force to the tube by the sampler insertion equipment.

7. Procedure

7.1 Remove loose material from the center of a casing or hollow stem auger as carefully as possible to avoid disturbance of the material to be sampled. If groundwater is encountered, maintain the liquid level in the borehole at or above ground water level during the drilling and sampling operation.

7.2 Bottom discharge bits are not permitted. Side discharge bits may be used, with caution. Jetting through an open-tube sampler to clean out the borehole to sampling elevation is not permitted.

NOTE 4—Roller bits are available in downward-jetting and diffused-jet configurations. Downward-jetting configuration rock bits are not acceptable. Diffuse-jet configurations are generally acceptable.

7.3 Lower the sampling apparatus so that the sample tube's bottom rests on the bottom of the hole and record depth to the bottom of the sample tube to the nearest 0.1-ft (.03 m)

7.3.1 Keep the sampling apparatus plumb during lowering, thereby preventing the cutting edge of the tube from scraping the wall of the borehole.

7.4 Advance the sampler without rotation by a continuous relatively rapid downward motion and record length of advancement to the nearest 1 in. (25 mm).

7.4.1 Determine the length of advance by the resistance and condition of the soil formation, but the length shall never exceed 5 to 10 diameters of the tube in sands and 10 to 15 diameters of the tube in clays. In no case shall a length of advance be greater than the sample-tube length minus an allowance for the sampler head and a minimum of 3-in. (75 mm) for sludge and end cuttings.

NOTE 5—The mass of sample, laboratory handling capabilities, transportation problems, and commercial availability of tubes will generally limit maximum practical lengths to those shown in Table 2.

7.5 When the soil formation is too hard for push-type insertion, the tube may be driven or Practice D 3550 may be used. If driving methods are used, the data regarding weight and fall of the hammer and penetration achieved must be shown in the report. Additionally, that tube must be prominently labeled a "driven sample."

7.6 Withdraw the sampler from the soil formation as carefully as possible in order to minimize disturbance of the sample. The tube can be slowly rotated to shear the material at the end of the tube, and to relieve water and/or suction pressures and improve recovery. Where the soil formation is soft, a delay before withdraw of the sampler (typically 5 to 30 minutes) may improve sample recovery.

8. Sample Measurement, Sealing and Labeling

8.1 Upon removal of the tube, remove the drill cuttings in the upper end of the tube and measure the length of the soil

Copyright ASTM International
Provided by IHS under license with ASTM
No reproduction or networking permitted without license from IHS

Licensee=Herndon, VA/5960458008, User=Carter, Lisa
Not for Resale, 04/11/2008 08:09:30 MDT

sample recovered to the nearest 0.25 in. (5 mm) in the tube. Seal the upper end of the tube. Remove at least 1 in. (25 mm) of material from the lower end of the tube. Use this material for soil description in accordance with Practice D 2488. Measure the overall sample length. Seal the lower end of the tube. Alternatively, after measurement, the tube may be sealed without removal of soil from the ends of the tube.

8.1.1 Tubes sealed over the ends, as opposed to those sealed with expanding packers, should be provided with spacers or appropriate packing materials, or both prior to sealing the tube ends to provide proper confinement. Packing materials must be nonabsorbent and must maintain their properties to provide the same degree of sample support with time.

8.1.2 Depending on the requirements of the investigation, field extrusion and packaging of extruded soil samples can be performed. This allows for physical examination and classification of the sample. Samples are extruded in special hydraulic jacks equipped with properly sized platens to extrude the core in a continuous smooth speed. In some cases, further extrusion may cause sample disturbance reducing suitability for testing of engineering properties. In other cases, if damage is not significant, cores can be extruded and preserved for testing (D 4220). Bent or damaged tubes should be cut off before extruding.

8.2 Prepare and immediately affix labels or apply markings as necessary to identify the sample (see Section 9). Assure that the markings or labels are adequate to survive transportation and storage.

NOTE 6—Top end of the tube should be labeled "top".

9. Field Log

9.1 Record the information that may be required for preparing field logs in general accordance to ASTM D 5434 "Guide for Field Logging of Subsurface Explorations of Soil and Rock". This guide is used for logging explorations by drilling and sampling. Some examples of the information required include;

9.1.1 Name and location of the project,

9.1.2 Boring number,

9.1.3 Log of the soil conditions,

9.1.4 Surface elevation or reference to a datum to the nearest foot (0.5 m) or better,

9.1.5 Location of the boring,

9.1.6 Method of making the borehole,

9.1.7 Name of the drilling foreman and company, and

9.1.8 Name of the drilling inspector(s).

9.1.9 Date and time of boring-start and finish,

9.1.10 Depth to groundwater level: date and time measured.

9.2 Recording the appropriate sampling information is required as follows:

9.2.1 Depth to top of sample to the nearest 0.1 ft. (.03 m) and number of sample,

9.2.2 Description of thin-walled tube sampler: size, type of metal, type of coating,

9.2.3 Method of sampler insertion: push or drive,

9.2.4 Method of drilling, size of hole, casing, and drilling fluid used,

9.2.5 Soil description in accordance with Practice D 2488,

9.2.6 Length of sampler advance (push), and

9.2.7 Recovery: length of sample obtained.

10. Keywords

10.1 geologic investigations; sampling; soil exploration; soil investigations; subsurface investigations; undisturbed

SUMMARY OF CHANGES

In accordance with committee D18 policy, this section identifies the location of changes to this standard since the last edition, 200, which may impact the use of this standard.

(1) Added parts of speech to terms.

(2) Corrected reference in Note 2 from D 5740 to D 3740.

ASTM International takes no position respecting the validity of any patent rights asserted in connection with any item mentioned in this standard. Users of this standard are expressly advised that determination of the validity of any such patent rights, and the risk of infringement of such rights, are entirely their own responsibility.

This standard is subject to revision at any time by the responsible technical committee and must be reviewed every five years and if not revised, either reapproved or withdrawn. Your comments are invited either for revision of this standard or for additional standards and should be addressed to ASTM International Headquarters. Your comments will receive careful consideration at a meeting of the responsible technical committee, which you may attend. If you feel that your comments have not received a fair hearing you should make your views known to the ASTM Committee on Standards, at the address shown below.

This standard is copyrighted by ASTM International, 100 Barr Harbor Drive, PO Box C700, West Conshohocken, PA 19428-2959, United States. Individual reprints (single or multiple copies) of this standard may be obtained by contacting ASTM at the above address or at 610-832-9585 (phone), 610-832-9555 (fax), or service@astm.org (e-mail); or through the ASTM website (www.astm.org).

ight ASTM International
ded by IHS under license with ASTM
production or networking permitted without license from IHS

Licensee=Herndon, VA/5960458008, User=Carter, Lisa
Not for Resale, 04/11/2008 08:09:30 MDT

Standard Operating Procedure

Locating and Clearing Underground Utilities

I. Purpose

The purpose of this SOP is to provide general guidelines and specific procedures that must be followed on Navy CLEAN projects for locating underground utilities and clearing dig locations in order to maximize our ability to avoid hitting underground utilities and to minimize liabilities to CH2M HILL and its subcontractors and health and safety risks to our project staff.

This SOP shall be used by Activity Managers and Project Managers to, in-turn, develop Activity-specific and project-specific utility location procedures. The activity and project-specific procedures will become part of work plans and project instructions and will be used to prepare scopes of work (SOWs) for the procurement of utility location subcontractors to meet the needs of individual projects.

This SOP also identifies the types of utility locating services that are available from subcontractors and the various tools that are used to locate utilities, and discusses when each type of service and tool may or may not be applicable.

II. Scope

Depending on the Navy/Marine Activity we typically find ourselves in one of two scenarios:

Scenario 1

The Activity provides utility locating (or dig clearance) services through the public works department or similar organization, or has a contract with an outside utility clearance service. Some of these services are provided in the form of dig permits which are required before you can dig or drill. In other cases no official permit is required and the process is somewhat vague.

Scenario 2

The Activity does not get involved in any utility locating processes aside from possibly providing the most recent utility maps, and relies on CH2M HILL to clear the dig locations.

Table 1 provides an up to date summary of which scenarios apply to the various primary Activities served under the Navy CLEAN program.

Scenario 1 is preferred because under this scenario the Navy tends to assume the responsibility if the location is improperly cleared, a utility is struck, and property damage results. However, our experience has been that the clearance services provided

by the Navy do not meet the standards that we consider to be adequate, in that they often simply rely on available base maps to mark utilities and do not verify locations using field geophysics. And if they do use locating tools, they do not provide adequate documentation or marking to confirm that a location has been cleared. So while the Navy's process may protect us from liability for property damage, it does not adequately protect our staff and subcontractors from health risks nor does it compensate us for down time, should a utility be hit.

Therefore, regardless of what services the Navy provides, in most cases we still need to supplement this effort with clearance services from our own third party utility location subcontractor following the procedures and guideline outlined in Section IV of this SOP. The cost implications of providing this service will range from $500 to several $1,000 depending on the size of the project.

The scope of services that we ask our subcontractors to provide can involve utility marking/mapping or the clearing of individual dig locations. In the former we ask our subs to mark all utilities within a "site" and often ask them to prepare a map based on their work. In the later, we ask them to clear (identify if there are any utilities within) a certain radius of a proposed dig/drill location.

The appropriate requested scope of services for a project will depend on the project. Clearing individual boreholes is often less expensive and allows the sub to concentrate their efforts on a limited area. However if the scope of the investigation is fluid (all borehole locations are not predetermined) it may be best to mark and map an entire site or keep the subcontractor on call.

Clearance of individual dig locations should be done to a minimum 20 foot radius around the location.

An example SOW for a utility subcontractor procurement is provided in Attachment A.

III. Services and Equipment

This section provides a general description of the services available to help us locate subsurface utilities and describes the types of equipment that these services may (or may not) use to perform their work. It identifies the capabilities of each type of equipment to help the PM specify what they should require from our utility location subs.

Services

The services that are available to us for identifying and marking underground utilities are:

- The local public/private utility-run service such as Miss Utility
- Utility location subcontractors (hired by us)

Attachment B provides a detailed description of each type of organization. It also provides contact numbers and web sites for the various Miss-Utility-type organizations in the areas where we do work for the Navy and contacts and services provided by several subcontractors that we have used or spoken to in the past.

Equipment

Attachment C provides a summary of the various types of equipment used for subsurface utility location. It describes the capabilities and limitations of each in order to help the PM determine if the equipment being used by a subcontractor is adequate.

It is important to make the potential subcontractors aware of the possible types of utilities (and utility materials) that are at the site, and to have them explain in their bid what types of equipment they will use to locate utilities /clear dig locations, and what the limitations of these equipment are.

A list of in-house experts that can be used to help you evaluate bids or answer questions you may have is provided in **Appendix C.**

IV. Procedures and Guidelines

This section presents specific procedures to be followed for the utility location work to be conducted by CH2M HILL and our subcontractors. In addition, a PM will have to follow the procedures required by the Activity to obtain their approvals, clearances and dig permits where necessary. These "dig permit" requirements vary by Activity and must be added to the project-specific SOP, or project instructions. It is preferable that the Activity perform their clearance processes before we follow up with our clearance work.

Activity Notification and Dig Permit Procedures

Identify Activity-specific permit and/or procedural requirements for excavation and drilling activities. Contact the Base Civil Engineer and obtain the appropriate form to begin the clearance process.

Activity Specific: To be provided by Activity or Project Manager

CH2M HILL Utility Clearance Procedures

Do not begin subsurface construction activities (e.g., trenching, excavation, drilling, etc.) until a check for underground utilities and similar obstructions has been conducted by CH2M HILL as a follow-up to the services provided by the Navy. The use of as-built drawings and utility company searches must be supplemented with a geophysical or other survey by a qualified, independent survey contractor (subcontracted to CH2M HILL) to identify additional and undiscovered buried utilities.

Examples of the type of geophysical technologies include (these are further described in Attachment C):

- **Ground Penetrating Radar (GPR),** which can detect pipes, including gas pipes, tanks, conduits, cables etc, both metallic and non-metallic at depths up to 30 feet depending on equipment. Sensitivity for both minimum object size and maximum depth detectable depends on equipment selected, soil conditions, etc.
- **Radio Frequency (RF),** involves inducing an RF signal in the pipe or cable and using a receiver to trace it. Some electric and telephone lines emit RF naturally and can be

detected without an induced signal. This method requires knowing where the conductive utility can be accessed to induce RF field if necessary.

- **Dual RF**, a modified version of RF detection using multiple frequencies to enhance sensitivity but with similar limitations to RF
- **Ferromagnetic Detectors**, are metal detectors that will detect ferrous and non-ferrous utilities. Sensitivity is limited, e.g. a 100 mm iron disk to a depth of about one meter or a 25 mm steel paper clip to a depth of about 20 cm.
- **Electronic markers,** are emerging technologies that impart a unique electronic signature to materials such as polyethylene pipe to facilitate location and tracing after installation. Promising for future installations but not of help for most existing utilities already in place.

The following procedures shall be used to identify and mark underground utilities during subsurface construction activities on the project:

- Contact utility companies or the state/regional utility protection service (such as Miss Utility) at least two (2) working days prior to intrusive activities to advise of the proposed work, and ask them to establish the location of the utility underground installations prior to the start of actual excavation: this is a law. These services will only mark the location of public-utility-owned lines and not Navy-owned utilities. In many cases there will not be any public-utility-owned lines on the Activity. There may also be Base-access issues to overcome.
- Procure and schedule the independent survey.
- The survey contractor shall determine the most appropriate geophysical technique or combinations of techniques to identify the buried utilities on the project site, based on the survey contractor's experience and expertise, types of utilities anticipated to be present and specific site conditions. ***The types of utilities must be provided to the bidding subcontractors in the SOW and procedures to be used must be specified by the bidder in their bid. It is extremely helpful to provide the sub with utility maps, with the caveat that all utilities are not necessarily depicted.***
- The survey subcontractor shall employ the same geophysical techniques used to identify the buried utilities, to survey the proposed path of subsurface investigation/construction work to confirm no buried utilities are present.
- Obtain utility clearances for subsurface work on both public and private property.
- Clearances provided by both the "Miss Utility" service and the CH2M HILL-subcontracted service are to be in writing, signed by the party conducting the clearance. The Miss Utility service will have standard notification forms/letters which typically simply state that they have been to the site and have done their work. The CH2M HILL subcontractor shall be required to fill out the form provided in Attachment D (this can be modified for a particular project) indicating that each dig/drill location has been addressed. ***This documentation requirement (with a copy of the form) needs to be provided in the subcontractor SOW.***

- Marking shall be done using the color coding presented in Attachment E. The type of material used for marking must be approved by the Activity prior to marking. Some base commanders have particular issues with persistent spray paint on their sidewalks and streets. ***Any particular marking requirements need to be provided in the subcontractor SOW.***
- Protect and preserve the markings of approximate locations of facilities until the markings are no longer required for safe and proper excavations. If the markings of utility locations are destroyed or removed before excavation commences or is completed, the Project Manager must notify the utility company or utility protection service to inform them that the markings have been destroyed.
- Perform a field check prior to drilling/digging (preferably while the utility location sub is still at the site) to see if field utility markings coincide with locations on utility maps. Look for fire hydrants, valves, manholes, light poles, lighted signs, etc to see if they coincide with utilities identified by the subcontractor.
- Underground utility locations must be physically verified (or dig locations must be physically cleared) by hand digging using wood or fiberglass-handled tools, air knifing, or by some other acceptable means approved by CH2M HILL, when the dig location (e.g. mechanical drilling, excavating) is expected to be within 5 feet of a marked underground system. Hand clearance shall be done to a depth of four feet unless a utility cross-section is available that indicates the utility is at a greater depth. In that event, the hand clearance shall proceed until the documented depth of the utility is reached.
- Conduct a site briefing for employees at the start of the intrusive work regarding the hazards associated with working near the utilities and the means by which the operation will maintain a safe working environment. Detail the method used to isolate the utility and the hazards presented by breaching the isolation.
- Monitor for signs of utilities during advancement of intrusive work (e.g., sudden change in advancement of auger or split spoon during drilling or change in color, texture or density during excavation that could indicate the ground has been previously disturbed).

IV. Attachments

A- Example SOW for Utility Location Subcontractor Procurement
B - Services Available for Identifying and Marking Underground Utilities
C – Equipment Used for Identifying Underground Utilities
D – Utility Clearance Documentation Form
E – Utility Marking Color Codes

Attachment A – Example SOW for Subcontracting Underground Utilities Locating Services

CTO-XXX

Scope of Work

Subsurface Utility Locating

Site XX

Navy Activity

City, State

A licensed and insured utility locator will be subcontracted to identify and mark out subsurface utilities for an environmental investigation/remediation project at Site XX of <<insert name of base, city, and state>>. The subcontractor will need to be available beginning at <<insert time>> on <<insert date>>. It is estimated that the work can be completed within XX days.

Proposed Scope of Work

The subcontractor will identify and mark all subsurface utilities (CHOOSE 1) that lie within a radius of 20 feet of each of XX sampling locations at Site XX shown on the attached Figure 1; (OR) that lie within the bounds of Site XX as delineated on the attached Figure 1. (If multiple sites are to be cleared, provide maps of each site with sample locations or clearance boundaries clearly delineated and a scale provided.)

Utilities will be identified using all reasonably available as-built drawings, electronic locating devices, and any other means necessary to maintain the safety of drilling and sampling personnel and the protection of the base infrastructure. The location of utilities identified from as-built drawings or other maps must be verified in the field prior to marking.

Base utility drawings for the Site(s) (CHOOSE 1) can be found at <<insert specific department and address or phone number on the base>> and should be reviewed by the subcontractor and referenced as part of the utility locating. (OR), will be provided to the subcontractor by CH2M HILL upon the award of the subcontract. (OR), are not available. Utility drawings shall not be considered definitive and must be field verified.

Field verification will include detection using nonintrusive subsurface detection equipment (magnetometers, GPR, etc) as well as opening manhole covers to verify pipe directions. As part of the bid, the Subcontractor shall provide a list of the various subsurface investigation tools they propose to have available and use at the site and what the limitations are of each tool.

A CH2M HILL representative shall be present to coordinate utility clearance activities and identify points and features to be cleared.

Field Marking and Documentation

All utilities located within **(CHOOSE 1)** ***a 20-ft radius of the XX proposed soil boring locations*** **(OR)** ***within the boundary of the site(s)*** as identified on the attached figure(s) will be marked using **paint** ***(some Bases such as the WNY may have restrictions on the use of permanent paint)*** and/or pin flags color coded to indicate electricity, gas, water, steam, telephone, TV cable, fiber optic, sewer, etc. The color coding shall match the industry standard as described on the attached form. In addition, the ***Buried Utility Location Tracking Form*** (attached) will be completed by the Subcontractor based upon what is identified in the field during the utility locating and submitted back to CH2M HILL (field staff or project manager) within 24 hours of completing the utility locating activities.

(OPTIONAL) ***The subcontractor shall also provide a map (or hand sketch) of the identified utilities to the Engineer within XX days of field demobilization. The map shall include coordinates or ties from fixed surface features to each identified subsurface utility.***

Bid Sheet/Payment Units

The subcontractor will bid on a time and materials basis for time spent on site and researching utility maps. Mobilization (including daily travel to the site) should be bid as a lump sum, as well as the preparation of the AHA and any required mapping. The per diem line item should be used if the field crew will require overnight accommodations at the project site.

Health and Safety Requirements

The utility locating subcontractor is to provide and assume responsibility for an adequate corporate Health and Safety Plan for onsite personnel. Standard personal safety equipment including: hard hat, safety glasses, steel-toed boots, gloves are recommended for all project activities. Specific health and safety requirements will be established by the Subcontractor for each project. The health and safety requirements will be subject to the review of CH2M HILL.

The subcontractor shall also prepare and provide to the Engineer, at least 48 hours prior to mobilization, an acceptable Activity Hazard Analysis (AHA) using the attached AHA form or similar.

It is also required that all subcontractor personnel who will be on site attend the daily 15-minute health and safety tailgate meeting at the start of each day in the field.

Subcontractor personnel showing indications of being under the influence of alcohol or illegal drugs will be sent off the job site and their employers will be notified. Subcontractor personnel under the influence of prescription or over-the-counter medication that may impair their ability to operate equipment will not be permitted to do so. It is expected that the subcontractor will assign them other work and provide a capable replacement (if necessary) to operate the equipment to continue work.

Security

The work will be performed on US Navy property. CH2M HILL will identify the Subcontractor personnel who will perform the work to the appropriate Navy facility point-of-contact, and will identify the Navy point-of-contact to the Subcontractor crew. The Subcontractor bears final responsibility for coordinating access of his personnel onto Navy property to perform required work. This responsibility includes arranging logistics and providing to CH2M HILL, in advance or at time of entry as specified, any required identification information for the Subcontractor personnel. Specifically, the following information should be submitted with the bid package for all personnel that will perform the work in question (this information is required to obtain a base pass):

- Name
- Birth Place
- Birth Date
- Social Security Number
- Drivers License State and Number
- Citizenship

Please be advised that no weapons, alcohol, or drugs will be permitted on the Navy facility at any time. If any such items are found, they will be confiscated, and the Subcontractor will be dismissed.

Quality Assurance

The Subcontractor will be licensed and insured to operate in the State of <<state>> and will comply with all applicable federal, state, county and local laws and regulations. The subcontractor will maintain, calibrate, and operate all electronic locating instruments in accordance with the manufacturer's recommendations. Additionally, the Subcontractor shall make all reasonable efforts to review as-built engineering drawings maintained by Base personnel, and shall notify the CH2M HILL Project Manager in writing (email is acceptable) whenever such documentation was not available or could not be reviewed.

Subcontractor Standby Time

At certain periods during the utility locating activities, the Subcontractor's personnel may be asked to stop work and standby when work may normally occur. During such times, the Subcontractor will cease activities until directed by the CH2M HILL representative to resume operations. Subcontractor standby time also will include potential delays caused by the CH2M HILL representative not arriving at the site by the agreed-upon meeting time for start of the work day. Standby will be paid to the

Subcontractor at the hourly rate specified in the Subcontractor's Bid Form attached to these specifications.

Cumulative Subcontractor standby will be accrued in increments no shorter than 15 minutes (i.e., an individual standby episode of less than 15 minutes is not chargeable).

During periods for which standby time is paid, the surveying equipment will not be demobilized and the team will remain at the site. At the conclusion of each day, the daily logs for the Subcontractor and CH2M HILL representative will indicate the amount of standby time incurred by the Subcontractor, if any. Payment will be made only for standby time recorded on CH2M HILL's daily logs.

Down Time

Should equipment furnished by the Subcontractor malfunction, preventing the effective and efficient prosecution of the work, or inclement weather conditions prevent safe and effective work from occurring, down time will be indicated in the Subcontractor's and CH2M Hill representative's daily logs. No payment will be made for down time.

Schedule

It is anticipated that the subsurface utility locating activities will occur on <<insert date>>. It is estimated that the above scope will be completed within XXX days.

Attachment B - Services Available for Identifying and Marking Underground Utilities

The services that are available to us for identifying and marking underground utilities are:

- The Activity's PWC (or similar organization)
- The local public/private utility -run service such as Miss Utility
- Utility location subcontractors (hired by CH2M HILL)

Each are discussed below.

Navy Public Works Department

A Public Works Department (PWD) is usually present at each Activity. The PWD is responsible for maintaining the public works at the base including management of utilities. In many cases, the PWD has a written permit process in place to identify and mark-out the locations of Navy-owned utilities [Note: The PWD is usually NOT responsible for the locations/mark-outs of non-Navy owned, public utilities (e.g., Washington Gas, Virginia Power, municipal water and sewer, etc.). Therefore, it is likely that we will have to contact other organizations besides the PWD in order to identify non-Navy owned, public utilities].

At some Activities, there may not be a PWD, the PWD may not have a written permit process in place, or the PWD may not take responsibility for utility locating and mark-outs. In these cases, the PWD should still be contacted since it is likely that they will have the best understanding of the utility locations at the Activity (i.e., engineering drawings, institutional knowledge, etc.). Subsequently, the PWD should be brought into a cooperative arrangement (if possible) with the other services employed in utility locating and mark-out in order to have the most comprehensive assessment performed.

At all Activities we should have a contact (name and phone number), and preferably an established relationship, with PWD, either directly or through the NAVFAC Atlantic, Midlant, or Washington NTR or Activity Environmental Office that we can work with and contact in the event of problems.

Miss Utility or "One Call" Services for Public Utility Mark-outs

Miss Utility or "One Call" service centers are information exchange centers for excavators, contractors and property owners planning any kind of excavation or digging. The "One Call" center notifies participating public utilities of the upcoming excavation work so they can locate and mark their underground utilities in advance to prevent possible damage to underground utility lines, injury, property damage and service outages. In some instances, such with southeastern Virginia bases, the Navy has entered into agreement with Ms. Utilities and is part of the response process for Miss

Utilities. Generally, a minimum of 48 hours is required for the public utility mark-outs to be performed. The "One Call" services are free to the public. Note that the "One Call" centers only coordinate with participating public utilities. There may be some public utilities that do NOT participate in the "One Call" center which may need to be contacted separately. For example, in Washington, DC, the Miss Utility "One Call" center does not locate and mark public sewer and water lines. Therefore, the municipal water and sewer authority must be contacted separately to have the sewer and water lines marked out. The AM should contact the appropriate one-call center to determine their scope of services.

For the Mid-Atlantic region, the following "One Call" service centers are available.

Name	Phone	Website	Comments
Miss Utility of DELMARVA	800-257-7777	www.missutility.net	Public utility mark-outs in Delaware, Maryland, Washington, DC, and Northern Virginia
Miss Utility of Southern Virginia (One Call)	800-552-7001	not available	Public utility mark-outs in Southern Virginia
Miss Utility of Virginia	800-257-7777 800-552-7007	www.missutilityofvirginia.com	General information on public utility mark-outs in Virginia, with links to Miss Utility of DELMARVA and Miss Utility of Southern Virginia (One Call)
Miss Utility of West Virginia, Inc	800-245-4848	none	Call to determine what utilities they work with in West Virginia
North Carolina One Call Center	800-632-4949	www.ncocc.org/ncocc/default.htm	Public Utility Markouts in North Carolina

Private Subcontractors

1. Utility-locating support is required at some level for most all CH2M HILL field projects in "clearing" proposed subsurface boring locations on the project site. Utility location and sample clearance can include a comprehensive effort of GIS map interpretation, professional land surveying, field locating, and geophysical surveying. Since we can usually provide our own GIS-related services for projects and our professional land surveying services are normally procured separately, utility-locating subcontractors will normally only be required for some level of geophysical surveying support in the field. This level of geophysical surveying support can range widely from a simple electromagnetic (EM) survey over a known utility line, to a blind geophysical effort, including a ground-penetrating radar (GPR) survey and/or a comprehensive EM survey to delineate and characterize all unknown subsurface anomalies.

   The level of service required from the subcontractor will vary depending on the nature of the site. At sites where utility locations are well defined on the maps and recent construction is limited, CH2M HILL may be confident with a limited effort from a traditional utility-locating subcontractor providing a simple EM survey. At

sites where utility locations are not well defined, where recent constructions may have altered utility locations, or the nature of the site makes utility location difficult, CH2M HILL will require the services of a comprehensive geophysical surveying subcontractor, with a wide range of GPR and EM services available for use on an "as-needed" basis. Typical costs for geophysical surveying subcontractors will range from approximately $200 per day for a simple EM effort (usually one crew member and one instrument) to approximately $1,500 per day for a comprehensive geophysical surveying effort (usually a two-person crew and multiple instruments). Comprehensive geophysical surveying efforts may also include field data interpretation (and subsequent report preparation) and non-destructive excavation to field-verify utility depths and locations.

The following table provides a list of recommended geophysical surveying support subcontractors that can be used for utility-locating services:

Company Name and Address	Contact Name and Phone Number	Equipment[1]					Other Services[2]		
		1	2	3	4	5	A	B	C
US Radar, Inc.* PO Box 319 Matawan, NJ 07747	Ron LaBarca 732-566-2035			4					
Utilities Search, Inc.*	Jim Davis 703-369-5758	4				4	4	4	4
So Deep, Inc.* 8397 Euclid Avenue Manassas Park, VA 20111	703-361-6005	4					4	4	4
Accurate Locating, Inc. 1327 Ashton Rd., Suite 101 Hanover, MD 21076	Ken Shipley 410-850-0280	4	4						
NAEVA Geophysics, Inc. P.O. Box 7325 Charlottesville, VA 22906	Alan Mazurowski 434-978-3187	4	4	4	4	4	4	4	4
Earth Resources Technology. Inc. 8106 Stayton Rd. Jessup, MD 20794	Peter Li 240-554-0161	4	4	4	4	4	4	4	
Geophex, Ltd 605 Mercury Street Raleigh, NC 27603	I. J. Won 919-839-8515	4	4	4	4	4	4	4	4

Notes:

*Companies denoted with an asterisk have demonstrated reluctance to assume responsibility for damage to underground utilities or an inability to accommodate the insurance requirements that CH2M HILL requests for this type of work at many Navy sites.

[1]Equipment types are:

1. Simple electromagnetic instruments, usually hand-held
2. Other, more innovative, electromagnetic instruments, including larger instruments for more area coverage
3. Ground-penetrating radar systems of all kinds
4. Audio-frequency detectors of all kinds
5. Radio-frequency detectors of all kinds

[2]Other services include:

A. Data interpretation and/or report preparation to provide a permanent record of the geophysical survey results and a professional interpretation of the findings, including expected accuracy and precision.

B. Non-destructive excavation to field-verify the depths, locations, and types of subsurface utilities.

C. Concrete/asphalt coring and pavement/surface restoration.

Attachment C – Equipment Used for Identifying Underground Utilities

This attachment provides a summary of the various types of equipment used for subsurface utility location. It describes the capabilities and limitations of each in order to help the AM and PM determine if the equipment being proposed by a subcontractor or Navy is adequate. A list of in-house experts that can be used to answer questions you may have is provided below.

CH2M HILL In-house Utility Location Experts

Tamir Klaff/WDC

Home Office Phone – 703-669-9611

Electromagnetic Induction (EMI) Methods

EMI instruments, in general, induce an electromagnetic field into the ground (the primary field) and then record the response (the secondary field), if any. Lateral changes in subsurface conductivity, such as caused by the presence of buried metal or by significant soil variations, cause changes in the secondary field recorded by the instrument and thus enable detection and mapping of the subsurface features. It should be noted that EMI only works for electrically conductive materials--plastic or PVC pipes are generally not detected with EMI. Water and gas lines are commonly plastic, although most new lines include a copper "locator" strip on the top of the PVC to allow for detection with EMI.

EMI technology encompasses a wide range of instruments, each with inherent strengths and weaknesses for particular applications. One major division of EMI is between "time-domain" and "frequency-domain" instruments that differ in the aspect of the secondary field they detect. Another difference in EMI instruments is the operating frequency they use to transmit the primary field. Audio- and radio-frequencies are often used for utility detection, although other frequencies are also used. Consideration of the type of utility expected, surface features that could interfere with detection, and the "congestion" of utilities in an area, should be made when choosing a particular EMI instrument for a particular site.

One common EMI tool used for utility location is a handheld unit that can be used to quickly scan an area for utilities and allows for marking locations in "real time". This method is most commonly used by "dig-safe" contractors marking out known utilities prior to excavation. It should be noted that this method works best when a signal (the primary field) can be placed directly onto the line (i.e., by clamping or otherwise connecting to the end of the line visible at the surface, or for larger utilities such as sewers, by running a transmitter through the utility). These types of tools also have a limited capability to scan an area for unknown utilities. Usually this requires having enough area to separate a hand held transmitter at least a hundred feet from the

receiver. Whether hunting for unknown, or confirming known, utilities, this method will only detect continuous lengths of metallic conductors.

In addition to the handheld EMI units, larger, more powerful EMI tools are available that provide more comprehensive detection and mapping of subsurface features. Generally, data with these methods are collected on a regular grid in the investigation area, and are then analyzed to locate linear anomalies that can be interpreted as utilities. These methods will usually detect *all* subsurface metal (above a minimum size), including pieces of abandoned utilities. In addition, in some situations, backfill can be detected against native soils giving information on trenching and possible utility location. Drawbacks to these methods are that the secondary signals from utilities are often swamped (i.e., undetectable) close to buildings and other cultural features, and that the subsurface at heavily built-up sites may be too complicated to confidently interpret completely.

Hand-held metal detectors (treasure-finders) are usually based on EMI technology. They can be used to locate shallow buried metal associated with utilities (e.g., junctions, manholes, metallic locators). Advantages of these tools is the ease of use and real-time marking of anomalies. Drawbacks include limited depths of investigations and no data storage capacity.

Ground Penetrating Radar (GPR)

GPR systems transmit radio and microwave frequency (e.g., 80 megaHertz to 1,000 megaHertz) waves into the ground and then record reflections of those waves coming back to the surface. Reflections of the radar waves typically occur at lithologic changes, subsurface discontinuities, and subsurface structures. Plastic and PVC pipes can sometimes be detected in GPR data, especially if they are shallow, large, and full of a contrasting material such as air in a wet soil, or water in a dry soil. GPR data are usually collected in regular patterns over an area and then analyzed for linear anomalies that can be interpreted as utilities. GPR is usually very accurate in x-y location of utilities, and can be calibrated at a site to give very accurate depth information as well. A significant drawback to GPR is that depth of investigation is highly dependant on background soil conductivity, and it will not work on all sites. It is not uncommon to get only 1-2 feet of penetration with the signal in damp, clayey environments. Another drawback to GPR is that sites containing significant fill material (e.g., concrete rubble, scrap metal, garbage) will result in complicated anomalies that are difficult or impossible to interpret.

Magnetic Field Methods

Magnetic field methods rely on detecting changes to the earth's magnetic field caused by ferrous metal objects. This method is usually more sensitive to magnetic metal (i.e., deeper detection) than EMI methods. A drawback to this method is it is more susceptible to being swamped by surface features such as fences and cars. In addition, procedures must usually be implemented that account for natural variations in the earth's background field as it changes throughout the day. One common use of the method is to measure and analyze the gradient of the magnetic field, which eliminates most of the drawbacks to the method. It should be noted this method only detects

ferrous metal, primarily iron and steel for utility location applications. Some utility detector combine magnetic and EMI methods into a single hand-held unit.

Optical Methods

Down the hole cameras may be useful in visually reviewing a pipe for empty conduits and/or vaults.

Attachment D – Utility Clearance Documentation Form

Attachment E – Utility Marking Color Codes

The following is the standard color code used by industry to mark various types of utilities and other features at a construction site.

White – Proposed excavations and borings

Pink – Temporary survey markings

Red – Electrical power lines, cables, conduits and lighting cables

Yellow – Gas, oil, steam, petroleum or gaseous materials

Orange – Communication, alarm or signal lines, cables, or conduits

Blue – Potable water

Purple – Reclaimed water, irrigation and slurry lines

Green – Sewer and storm drain lines

STANDARD OPERATING PROCEDURE

VOC Sampling-Water

I. Purpose

To provide general guidelines for sampling aqueous volatile organic compounds.

II. Scope

Standard techniques for collecting representative samples are summarized. Site-specific details are discussed in the Field Sampling Plan.

III. Equipment and Materials

- Sample vials pre-preserved at laboratory with hydrochloric acid (HCl)
- Surgical or latex gloves

IV. Procedures and Guidelines

1. Sample VOCs before sampling other analyte groups.

2. When sampling for VOCs, especially residential wells, evaluate the area around the sampling point for possible sources of air contamination by VOCs. Products that may give off VOCs and possibly contaminate a sample include perfumes and cosmetics, skin applied pharmaceuticals, automotive products (gasoline, starting fluid, windshield deicers, carburetor cleaners, etc.) and household paint products (paint strippers, thinners, turpentine, etc.).

3. Keep the caps off the sample vials for as short a time as possible.

4. Wear clean latex or surgical gloves.

5. Fill the sample vial immediately, allowing the water stream to strike the inner wall of the vial to minimize formation of air bubbles. DO NOT RINSE THE SAMPLE VIALS BEFORE FILLING.

6. Fill the sample vial with a minimum of turbulence, until the water forms a positive meniscus at the brim.

7. Replace the cap by gently setting it on the water meniscus. Tighten firmly, but DO NOT OVERTIGHTEN.

8. Invert the vial and tap it lightly. If you see air bubbles in the sample, do not add more sample. Use another vial to collect another sample. Repeat if necessary until you obtain a proper sample.

V. Attachments

None.

VI. Key Checks and Items

- Check for possible sources of contamination.
- Fill slowly, with as little turbulence as possible.
- Check for air bubbles.

STANDARD OPERATING PROCEDURE

Water-Level Measurements

I. Purpose and Scope

The purpose of this procedure is to provide a guideline for the measurement of the depth to groundwater in piezometers and monitoring wells, even where a second phase of floating liquid (e.g., gasoline) is encountered, and on staff gages in surface-water bodies. This SOP includes guidelines for discrete measurements of static water levels and does not cover the use of continuously recording loggers (see SOP *Use of Data Loggers and Pressure Transducers)*.

II. Equipment and Materials

- Electronic water-level meter (Solinst® or equivalent) with a minimum 100-foot tape; the tape should have graduations in increments of 0.01 feet or less
- Interface probe (Solinst® Model 122 Interface Meter or equivalent)

III. Procedures and Guidelines

Verify that the unit is turned on and functioning properly. Slowly lower the probe on its cable into the piezometer or well until the probe just contacts the water surface; the unit will respond with a tone or light signal. Note the depth from a reference point indicated on the piezometer or well riser. Typically this is the top of the PVC casing. If no reference is clearly visible, measure the depth to water from the northern edge of the PVC casing. If access to the top of the PVC casing is difficult, sight across the top of the locking casing adjacent to the measuring point, recording the position of the cable when the probe is at the water surface.

Measure the distance from this point to the closest interval marker on the tape, and record the water level reading in the logbook. Water levels will be measured to the nearest 0.01-foot. Also when specified in the project plans, measure and record the depth of the piezometer or well. The depth of the piezometer or well may be measured using the water-level probe with the instrument turned off.

Free product light or dense nonaqueous phase liquid may be present in the piezometer or well. If the presence of free product is suspected, the thickness of the product should be determined using appropriate equipment (e.g., Solinst® Model 122 Interface Meter). The depth to water also is determined with this equipment and the water-level meter should not be used in the piezometer or well as long as product is present. Typically, a constant sound is emitted from the device when free product is encountered and an alternating on/off beep sound is emitted when water is encountered.

The apparent elevation of the water level in the well or piezometer is determined by measuring both the apparent depth to water and the thickness of free product. The corrected water-level elevation is calculated by the following equation:

$$WL_c = Wl_a + (\text{Free-product thickness} \times 0.80)$$

Where WL_c = Corrected water-level elevation

Wl_a = Apparent water-level elevation

0.80 = Typical value for the density of petroleum hydrocarbon products.

If free product is detected on the surface of the water in the piezometer or well, the value of sampling should be reconsidered because of the potential for contaminating the sampling equipment.

Staff gages may be installed in some surface-water bodies. These facilities typically are constructed by attaching a calibrated, marked staff gage to a wood or metal post, driving the post into the bottom of the surface-water body, and surveying the elevation of the top of the post to a resolution or 0.01-foot. The elevation of the water in the surface-water body then can be determined by reading off the distance the water level is from the top of the post. A shield or other protection may be needed to calm the fluctuations in water level if the gage is installed at a location exposed to wind or wave.

IV. Attachments

None.

V. Key Checks

- Before each use, verify that the battery is charged by pressing the test button on the water-level meter.
- Verify that the unit is operating correctly by testing the probe in distilled or de-ionized water. Leave the unit turned off when not in use.

STANDARD OPERATING PROCEDURE

Field Measurement of pH, Specific Conductance, Turbidity, Dissolved Oxygen, ORP, and Temperature Using a Water Quality Meter with Flow-Through Cell

I. Purpose and Scope

The purpose of this procedure is to provide a general guideline for using a water quality meter for field measurements of pH, specific conductance, turbidity, dissolved oxygen, oxidation-reduction potential (ORP), and temperature of aqueous samples. The operator's manual should be consulted for detailed operating procedures.

II. Equipment and Materials

- Water Quality Monitoring System with flow-though cell (Horiba, YSI, In-Situ, Ion Science, etc)
- Auto-Calibration Standard Solution (provided by rental company)
- Distilled water in squirt bottle

III. Procedures and Guidelines

A. General Parameters and Specifications:

Note: the general parameters listed below may not be available for every type of meter used. Please refer to the specific meter's manual to determine meter's range of measurement and accuracy.

Parameter	Range of measurement	Accuracy
pH	0 to 14 pH units	+/- 0.1 pH units
Specific conductance	0 to 9.99 S/m	+/- 3 % full scale
Turbidity	0 to 800 NTU	+/- 5 % full scale
Dissolved oxygen	0 to 19.99 mg/l	+/- 0.2 mg/l
Temperature	0 to 55 ^{o}C	+/- 1.0 ^{o}C
ORP	-999 to +999 mV	+/- 15 mV
Salinity	0 to 4 %	+/- 0.3 %

B. Calibration:

Prior to each day's use, clean the probe and flow-through cell using deionized water and calibrate using the Standard Solution. Refer to the specific instrumentation manual for the proper calibration methods.

C. Sample Measurement:

The water quality probes are inserted into a flow-through cell. The purged groundwater is directed through the cell by connecting the pump discharge tubing to the bottom port on the flow through cell, allowing measurements to be collected before the water contacts the atmosphere.

As water passes through the flow-through the flow cell, press MEAS to obtain readings or the readings are displayed on the meter for each parameter (dependent on the type of meter used). Record the water quality parameter data in a field notebook. Once the parameters have stabilized (see *Low-Flow Groundwater Sampling from Monitoring Wells – EPA Region I and III* or *Low-Flow Groundwater Sampling from Monitoring Wells – EPA Region IV* depending on project site location), remove the tubing from the bottom port of the flow-through cell. Never collect a groundwater sample for laboratory analysis from the flow-through cell. Rinse the flow-though cell between wells to remove any sediment buildup within the cell.

IV. Key Checks and Preventive Maintenance

- Calibrate meter
- Clean probe with deionized water when done
- Refer to operations manual for recommended maintenance and troubleshooting
- Check batteries, and have a replacement set on hand
- Due to the importance of obtaining these parameters, the field team should have a spare unit readily available in case of an equipment malfunction.

Appendix D
Laboratory DoD ELAP Certifications Tables

PERRY JOHNSON LABORATORY ACCREDITATION, INC.

Certificate of Accreditation

Perry Johnson Laboratory Accreditation, Inc. has assessed the Laboratory of:

Columbia Analytical Services

1565 Jefferson Road, Building 300, Suite 360, Rochester, NY 14623

(Hereinafter called the Organization) and hereby declares that Organization has met the requirements of ISO/IEC 17025:2005 "General Requirements for the competence of Testing and Calibration Laboratories" and the DoD Quality Systems Manual for Environmental Laboratories Version 4.1 4/22/2009 and is accredited is accordance with the:

United States Department of Defense
Environmental Laboratory Accreditation Program
(DoD-ELAP)

This accreditation demonstrates technical competence for the defined scope:

Environmental Testing

(As detailed in the supplement)

Accreditation claims for such testing and/or calibration services shall only be made from addresses referenced within this certificate. This Accreditation is granted subject to the system rules governing the Accreditation referred to above, and the Organization hereby covenants with the Accreditation body's duty to observe and comply with the said rules.

For PJLA:

Initial Accreditation Date:	*Issue Date:*	*Accreditation No.:*	*Certificate No.:*
January 22, 2010	April 7, 2012	65817	L12-48

Tracy Szerszen
President/Operations Manager

Perry Johnson Laboratory
Accreditation, Inc. (PJLA)
755 W. Big Beaver, Suite 1325
Troy, Michigan 48084

The validity of this certificate is maintained through ongoing assessments based on a continuous accreditation cycle. The validity of this certificate should be confirmed through the PJLA website: www.pjlabs.com

Certificate of Accreditation: Supplement

ISO/IEC 17025:2005 and DoD-ELAP

Columbia Analytical Services

1565 Jefferson Road, Building 300, Suite 360, Rochester, NY 14609
Lisa Reyes Phone: 585-288-5380

Accreditation is granted to the facility to perform the following testing:

Matrix	Standard/Method	Technology	Analyte
Aqueous	(CAS SOP) GEN-TICW	UV-VIS	Total inorganic carbon
Aqueous	EPA 1631	CVAFS	Mercury
Aqueous	EPA 1664A	Gravimetric	Oil and grease
Aqueous	EPA 1664A	Gravimetric	Total petroleum hydrocarbons
Aqueous	EPA 218.6	IC-UV	Chromium, Hexavalent
Aqueous	EPA 245.1	CVAA	Mercury
Aqueous	EPA 300.0	IC	Chloride
Aqueous	EPA 300.0	IC	Fluoride
Aqueous	EPA 300.0	IC	Nitrate
Aqueous	EPA 300.0	IC	Sulfate
Aqueous	EPA 351.2	UV-VIS	Nitrogen, total Kjeldahl
Aqueous	EPA 353.2	UV-VIS	Nitrite as N
Aqueous	EPA 410.4	UV-VIS	Chemical oxygen demand
Aqueous	EPA 7470A	CVAA	Mercury
Aqueous	EPA 8151A	GC-ECD	Dinoseb
Aqueous	EPA 8260C	GC-MS-SIM	1,1-Dichloroethene
Aqueous	EPA 8260C	GC-MS-SIM	1,2-Dichlorobenzene
Aqueous	EPA 8260C	GC-MS-SIM	1,2-Dichloroethane
Aqueous	EPA 8260C	GC-MS-SIM	1,4-Dioxane
Aqueous	EPA 8260C	GC-MS-SIM	Carbon tetrachloride
Aqueous	EPA 8260C	GC-MS-SIM	Dichloromethane
Aqueous	EPA 8260C	GC-MS-SIM	Ethylbenzene
Aqueous	EPA 8260C	GC-MS-SIM	m- + p-Xylene
Aqueous	EPA 8260C	GC-MS-SIM	o-Xylene
Aqueous	EPA 8260C	GC-MS-SIM	Tetrachloroethene
Aqueous	EPA 8260C	GC-MS-SIM	Trichloroethene
Aqueous	EPA 8260C	GC-MS-SIM	Vinyl chloride
Aqueous	EPA 8260C	GC-MS-SIM	Xylenes, total
Aqueous	EPA 8310	HPLC-UV/FLUOR	Acenaphthene
Aqueous	EPA 8310	HPLC-UV/FLUOR	Acenaphthylene
Aqueous	EPA 8310	HPLC-UV/FLUOR	Anthracene
Aqueous	EPA 8310	HPLC-UV/FLUOR	Benzo(a)antracene
Aqueous	EPA 8310	HPLC-UV/FLUOR	Benzo(a)pyrene

Certificate of Accreditation: Supplement

ISO/IEC 17025:2005 and DoD-ELAP

Columbia Analytical Services

1565 Jefferson Road, Building 300, Suite 360, Rochester, NY 14609
Lisa Reyes Phone: 585-288-5380

Accreditation is granted to the facility to perform the following testing:

Matrix	Standard/Method	Technology	Analyte
Aqueous	EPA 8310	HPLC-UV/FLUOR	Benzo(b)fluoranthene
Aqueous	EPA 8310	HPLC-UV/FLUOR	Benzo(g,h,i)perylene
Aqueous	EPA 8310	HPLC-UV/FLUOR	Benzo(k)fluoranthene
Aqueous	EPA 8310	HPLC-UV/FLUOR	Chrysene
Aqueous	EPA 8310	HPLC-UV/FLUOR	Dibenzo(a,h)anthracene
Aqueous	EPA 8310	HPLC-UV/FLUOR	Fluoranthene
Aqueous	EPA 8310	HPLC-UV/FLUOR	Fluorene
Aqueous	EPA 8310	HPLC-UV/FLUOR	Indeno(1,2,3-cd)pyrene
Aqueous	EPA 8310	HPLC-UV/FLUOR	Naphthalene
Aqueous	EPA 8310	HPLC-UV/FLUOR	Phenanthrene
Aqueous	EPA 8310	HPLC-UV/FLUOR	Pyrene
Aqueous	EPA 9040B, C	POT	pH
Aqueous	EPA 9060, A	UV-VIS	Total organic carbon
Aqueous	EPA 9066	UV-VIS	Phenolics, total
Aqueous	RSK-175	GC-FID	Ethane
Aqueous	RSK-175	GC-FID	Ethylene
Aqueous	RSK-175	GC-FID	Methane
Aqueous	RSK-175	GC-FID	Propane
Aqueous	RSK-175	GC-FID	Acetylene
Aqueous	SM 2320B	Titration	Alkalinity, total, carbonate, and bicarbonate
Aqueous	SM 2340C	Titration	Hardness, total
Solids	(CAS SOP) GEN-351.2	UV-VIS	Nitrogen, total Kjeldahl
Solids	(CAS SOP) GEN-420.4/9066	UV-VIS	Phenolics, total
Solids	EPA Lloyd Kahn	UV-VIS	Total organic carbon
Solids	EPA 300.0	IC	Chloride
Solids	EPA 300.0	IC	Fluoride
Solids	EPA 300.0	IC	Nitrate
Solids	EPA 300.0	IC	Sulfate
Solids	EPA 7471B	CVAA	Mercury
Solids	EPA 8330A	HPLC-UV	1,3,5-Trinitrobenzene
Solids	EPA 8330A	HPLC-UV	1,3-Dinitrobenzene
Solids	EPA 8330A	HPLC-UV	2,4,6-Trinitrotoluene
Solids	EPA 8330A	HPLC-UV	2,4-Dinitrotoluene

Certificate of Accreditation: Supplement

ISO/IEC 17025:2005 and DoD-ELAP

Columbia Analytical Services

1565 Jefferson Road, Building 300, Suite 360, Rochester, NY 14609
Lisa Reyes Phone: 585-288-5380

Accreditation is granted to the facility to perform the following testing:

Matrix	Standard/Method	Technology	Analyte
Solids	EPA 8330A	HPLC-UV	2,6-Dinitrotoluene
Solids	EPA 8330A	HPLC-UV	2-Amino-4,6-dinitrotoluene
Solids	EPA 8330A	HPLC-UV	2-Nitrotoluene
Solids	EPA 8330A	HPLC-UV	3-Nitrotoluene
Solids	EPA 8330A	HPLC-UV	4-Amino-2,6-dinitrotoluene
Solids	EPA 8330A	HPLC-UV	4-Nitrotoluene
Solids	EPA 8330A	HPLC-UV	HMX
Solids	EPA 8330A	HPLC-UV	Nitrobenzene
Solids	EPA 8330A	HPLC-UV	RDX
Solids	EPA 8330A	HPLC-UV	Tetryl
Solids	EPA 9045C, D	POT	pH
Solids	SM 5220B	Titration	Chemical oxygen demand
Aqueous/Solids	EPA 1010A	Pensky Martin	Ignitability
Aqueous/Solids	EPA 353.2	UV-VIS	Nitrate/nitrite as N
Aqueous/Solids	EPA 6010C	ICP-AES	Aluminum
Aqueous/Solids	EPA 6010C	ICP-AES	Antimony
Aqueous/Solids	EPA 6010C	ICP-AES	Arsenic
Aqueous/Solids	EPA 6010C	ICP-AES	Barium
Aqueous/Solids	EPA 6010C	ICP-AES	Beryllium
Aqueous/Solids	EPA 6010C	ICP-AES	Boron
Aqueous/Solids	EPA 6010C	ICP-AES	Cadmium
Aqueous/Solids	EPA 6010C	ICP-AES	Calcium
Aqueous/Solids	EPA 6010C	ICP-AES	Chromium
Aqueous/Solids	EPA 6010C	ICP-AES	Cobalt
Aqueous/Solids	EPA 6010C	ICP-AES	Copper
Aqueous/Solids	EPA 6010C	ICP-AES	Iron
Aqueous/Solids	EPA 6010C	ICP-AES	Lead
Aqueous/Solids	EPA 6010C	ICP-AES	Magnesium
Aqueous/Solids	EPA 6010C	ICP-AES	Manganese
Aqueous/Solids	EPA 6010C	ICP-AES	Nickel
Aqueous/Solids	EPA 6010C	ICP-AES	Potassium
Aqueous/Solids	EPA 6010C	ICP-AES	Selenium
Aqueous/Solids	EPA 6010C	ICP-AES	Silver

Certificate of Accreditation: Supplement

ISO/IEC 17025:2005 and DoD-ELAP

Columbia Analytical Services

1565 Jefferson Road, Building 300, Suite 360, Rochester, NY 14609
Lisa Reyes Phone: 585-288-5380

Accreditation is granted to the facility to perform the following testing:

Matrix	Standard/Method	Technology	Analyte
Aqueous/Solids	EPA 6010C	ICP-AES	Sodium
Aqueous/Solids	EPA 6010C	ICP-AES	Thallium
Aqueous/Solids	EPA 6010C	ICP-AES	Tin
Aqueous/Solids	EPA 6010C	ICP-AES	Vanadium
Aqueous/Solids	EPA 6010C	ICP-AES	Zinc
Aqueous/Solids	EPA 6020A	ICP-MS	Arsenic
Aqueous/Solids	EPA 6020A	ICP-MS	Antimony
Aqueous/Solids	EPA 6020A	ICP-MS	Barium
Aqueous/Solids	EPA 6020A	ICP-MS	Beryllium
Aqueous/Solids	EPA 6020A	ICP-MS	Cadmium
Aqueous/Solids	EPA 6020A	ICP-MS	Chromium
Aqueous/Solids	EPA 6020A	ICP-MS	Cobalt
Aqueous/Solids	EPA 6020A	ICP-MS	Copper
Aqueous/Solids	EPA 6020A	ICP-MS	Lead
Aqueous/Solids	EPA 6020A	ICP-MS	Manganese
Aqueous/Solids	EPA 6020A	ICP-MS	Nickel
Aqueous/Solids	EPA 6020A	ICP-MS	Selenium
Aqueous/Solids	EPA 6020A	ICP-MS	Silver
Aqueous/Solids	EPA 6020A	ICP-MS	Thallium
Aqueous/Solids	EPA 6020A	ICP-MS	Vanadium
Aqueous/Solids	EPA 6020A	ICP-MS	Zinc
Aqueous/Solids	EPA 680	GC-MS	Monochlorobiphenyls, Total
Aqueous/Solids	EPA 680	GC-MS	Dichlorobiphenyls, Total
Aqueous/Solids	EPA 680	GC-MS	Trichlorobiphenyls, Total
Aqueous/Solids	EPA 680	GC-MS	Tetrachlorobiphenyls, Total
Aqueous/Solids	EPA 680	GC-MS	Pentachlorobiphenyls, Total
Aqueous/Solids	EPA 680	GC-MS	Hexachlorobiphenyls, Total
Aqueous/Solids	EPA 680	GC-MS	Heptachlorobiphenyls, Total
Aqueous/Solids	EPA 680	GC-MS	Octachlorobiphenyls, Total
Aqueous/Solids	EPA 680	GC-MS	Nonachlorobiphenyls, Total
Aqueous/Solids	EPA 680	GC-MS	Decachlorobiphenyls, Total
Aqueous/Solids	EPA 6850	HPLC-MS	Perchlorate

Certificate of Accreditation: Supplement

ISO/IEC 17025:2005 and DoD-ELAP

Columbia Analytical Services

1565 Jefferson Road, Building 300, Suite 360, Rochester, NY 14609
Lisa Reyes Phone: 585-288-5380

Accreditation is granted to the facility to perform the following testing:

Matrix	Standard/Method	Technology	Analyte
Aqueous/Solids	EPA 7196A	UV-VIS	Chromium, hexavalent
Aqueous/Solids	EPA 7199	IC-UV	Chromium, hexavalent
Aqueous/Solids	EPA 8015C	GC-FID	Gasoline range organics
Aqueous/Solids	EPA 8015C	GC-FID	Diesel range organics
Aqueous/Solids	EPA 8081B	GC-ECD	4,4'-DDD
Aqueous/Solids	EPA 8081B	GC-ECD	4,4'-DDE
Aqueous/Solids	EPA 8081B	GC-ECD	4,4'-DDT
Aqueous/Solids	EPA 8081B	GC-ECD	Aldrin
Aqueous/Solids	EPA 8081B	GC-ECD	α-BHC
Aqueous/Solids	EPA 8081B	GC-ECD	Alpha-chlordane
Aqueous/Solids	EPA 8081B	GC-ECD	β-BHC
Aqueous/Solids	EPA 8081B	GC-ECD	Chlordane, technical
Aqueous/Solids	EPA 8081B	GC-ECD	δ-BHC
Aqueous/Solids	EPA 8081B	GC-ECD	Dieldrin
Aqueous/Solids	EPA 8081B	GC-ECD	Endosulfan I
Aqueous/Solids	EPA 8081B	GC-ECD	Endosulfan II
Aqueous/Solids	EPA 8081B	GC-ECD	Endosulfan sulfate
Aqueous/Solids	EPA 8081B	GC-ECD	Endrin
Aqueous/Solids	EPA 8081B	GC-ECD	Endrin aldehyde
Aqueous/Solids	EPA 8081B	GC-ECD	Endrin ketone
Aqueous/Solids	EPA 8081B	GC-ECD	γ-BHC (Lindane)
Aqueous/Solids	EPA 8081B	GC-ECD	γ-Chlordane
Aqueous/Solids	EPA 8081B	GC-ECD	Heptachlor
Aqueous/Solids	EPA 8081B	GC-ECD	Heptachlor epoxide
Aqueous/Solids	EPA 8081B	GC-ECD	Hexachlorobenzene
Aqueous/Solids	EPA 8081B	GC-ECD	Methoxychlor
Aqueous/Solids	EPA 8081B	GC-ECD	Toxaphene
Aqueous/Solids	EPA 8082A	GC-ECD	PCB 1016
Aqueous/Solids	EPA 8082A	GC-ECD	PCB 1221
Aqueous/Solids	EPA 8082A	GC-ECD	PCB 1232
Aqueous/Solids	EPA 8082A	GC-ECD	PCB 1242
Aqueous/Solids	EPA 8082A	GC-ECD	PCB 1248
Aqueous/Solids	EPA 8082A	GC-ECD	PCB 1254

Certificate of Accreditation: Supplement

ISO/IEC 17025:2005 and DoD-ELAP

Columbia Analytical Services

1565 Jefferson Road, Building 300, Suite 360, Rochester, NY 14609
Lisa Reyes Phone: 585-288-5380

Accreditation is granted to the facility to perform the following testing:

Matrix	Standard/Method	Technology	Analyte
Aqueous/Solids	EPA 8082A	GC-ECD	PCB 1260
Aqueous/Solids	EPA 8082A	GC-ECD	PCB 1268
Aqueous/Solids	EPA 8151A	GC-ECD	2,4-D
Aqueous/Solids	EPA 8151A	GC-ECD	Dicamba
Aqueous/Solids	EPA 8151A	GC-ECD	2,4,5-T
Aqueous/Solids	EPA 8151A	GC-ECD	2,4,5-TP
Aqueous/Solids	EPA 8151A	GC-ECD	Pentachlorophenol (PCP)
Aqueous/Solids	EPA 8260C	GC-MS	1,1,1,2-Tetrachloroethane
Aqueous/Solids	EPA 8260C	GC-MS	1,1,1-Trichloroethane
Aqueous/Solids	EPA 8260C	GC-MS	1,1,2,2-Tetrachloroethane
Aqueous/Solids	EPA 8260C	GC-MS	1,1,2-Trichloro-1,2,2-trifluoroethane (Freon 113)
Aqueous/Solids	EPA 8260C	GC-MS	1,1,2-Trichloroethane
Aqueous/Solids	EPA 8260C	GC-MS	1,1-Dichloroethane
Aqueous/Solids	EPA 8260C	GC-MS	1,1-Dichloroethene
Aqueous/Solids	EPA 8260C	GC-MS	1,1-Dichloropropene
Aqueous/Solids	EPA 8260C	GC-MS	1,2,3-Trichlorobenzene
Aqueous/Solids	EPA 8260C	GC-MS	1,2,3-Trichloropropane
Aqueous/Solids	EPA 8260C	GC-MS	1,2,4-Trichlorobenzene
Aqueous/Solids	EPA 8260C	GC-MS	1,2,4-Trimethylbenzene
Aqueous/Solids	EPA 8260C	GC-MS	1,2-Dibromo-3-chloropropane
Aqueous/Solids	EPA 8260C	GC-MS	1,2-Dibromoethane
Aqueous/Solids	EPA 8260C	GC-MS	1,2-Dichloro-1,1,2,2-tetrafluoroethane (Freon-114)
Aqueous/Solids	EPA 8260C	GC-MS	1,2-Dichloro-1,1,2-trifluoroethane (Freon 123a)
Aqueous/Solids	EPA 8260C	GC-MS	1,2-Dichlorobenzene
Aqueous/Solids	EPA 8260C	GC-MS	1,2-Dichloroethane
Aqueous/Solids	EPA 8260C	GC-MS	1,2-Dichloroethene, total
Aqueous/Solids	EPA 8260C	GC-MS	1,2-Dichloropropane
Aqueous/Solids	EPA 8260C	GC-MS	1,3,5-Trimethylbenzene
Aqueous/Solids	EPA 8260C	GC-MS	1,3-Dichlorobenzene
Aqueous/Solids	EPA 8260C	GC-MS	1,3-Dichloropropane
Aqueous/Solids	EPA 8260C	GC-MS	1,4-Dichlorobenzene
Aqueous/Solids	EPA 8260C	GC-MS	1,4-Dioxane

Certificate of Accreditation: Supplement

ISO/IEC 17025:2005 and DoD-ELAP

Columbia Analytical Services

1565 Jefferson Road, Building 300, Suite 360, Rochester, NY 14609
Lisa Reyes Phone: 585-288-5380

Accreditation is granted to the facility to perform the following testing:

Matrix	Standard/Method	Technology	Analyte
Aqueous/Solids	EPA 8260C	GC-MS	2,2-Dichloro-1,1,1-trifluoroethane (Freon 123)
Aqueous/Solids	EPA 8260C	GC-MS	2,2-Dichloropropane
Aqueous/Solids	EPA 8260C	GC-MS	2-Butanone (MEK)
Aqueous/Solids	EPA 8260C	GC-MS	2-Chloro-1,3-butadiene
Aqueous/Solids	EPA 8260C	GC-MS	2-Chloroethylvinyl ether
Aqueous/Solids	EPA 8260C	GC-MS	2-Chlorotoluene
Aqueous/Solids	EPA 8260C	GC-MS	2-Hexanone
Aqueous/Solids	EPA 8260C	GC-MS	2-Methyl-1-propanol (Isobutlyl alcohol)
Aqueous/Solids	EPA 8260C	GC-MS	2-Methyl-2-propanol (Tertbutyl alcohol)
Aqueous/Solids	EPA 8260C	GC-MS	2-Nitropropane
Aqueous/Solids	EPA 8260C	GC-MS	2-Propanol
Aqueous/Solids	EPA 8260C	GC-MS	3-Chloro-1-propene (Allyl chloride)
Aqueous/Solids	EPA 8260C	GC-MS	4-Chlorotoluene
Aqueous/Solids	EPA 8260C	GC-MS	4-Ethyltoluene
Aqueous/Solids	EPA 8260C	GC-MS	4-Isopropyltoluene
Aqueous/Solids	EPA 8260C	GC-MS	4-Methyl-2-pentanone (MIBK)
Aqueous/Solids	EPA 8260C	GC-MS	Acetone
Aqueous/Solids	EPA 8260C	GC-MS	Acetonitrile
Aqueous/Solids	EPA 8260C	GC-MS	Acrolein
Aqueous/Solids	EPA 8260C	GC-MS	Acrylonitrile
Aqueous/Solids	EPA 8260C	GC-MS	Benzene
Aqueous/Solids	EPA 8260C	GC-MS	Benzyl chloride
Aqueous/Solids	EPA 8260C	GC-MS	Bromobenzene
Aqueous/Solids	EPA 8260C	GC-MS	Bromochloromethane
Aqueous/Solids	EPA 8260C	GC-MS	Bromodichloromethane
Aqueous/Solids	EPA 8260C	GC-MS	Bromoform
Aqueous/Solids	EPA 8260C	GC-MS	Bromomethane
Aqueous/Solids	EPA 8260C	GC-MS	Carbon disulfide
Aqueous/Solids	EPA 8260C	GC-MS	Carbon tetrachloride
Aqueous/Solids	EPA 8260C	GC-MS	Chlorobenzene
Aqueous/Solids	EPA 8260C	GC-MS	Chloroethane
Aqueous/Solids	EPA 8260C	GC-MS	Chloroform
Aqueous/Solids	EPA 8260C	GC-MS	Chloromethane

Certificate of Accreditation: Supplement

ISO/IEC 17025:2005 and DoD-ELAP

Columbia Analytical Services

1565 Jefferson Road, Building 300, Suite 360, Rochester, NY 14609
Lisa Reyes Phone: 585-288-5380

Accreditation is granted to the facility to perform the following testing:

Matrix	Standard/Method	Technology	Analyte
Aqueous/Solids	EPA 8260C	GC-MS	cis-1,2-Dichloroethene
Aqueous/Solids	EPA 8260C	GC-MS	cis-1,3-Dichloropropene
Aqueous/Solids	EPA 8260C	GC-MS	Cyclohexane
Aqueous/Solids	EPA 8260C	GC-MS	Cyclohexanone
Aqueous/Solids	EPA 8260C	GC-MS	Dibromochloromethane
Aqueous/Solids	EPA 8260C	GC-MS	Dibromomethane
Aqueous/Solids	EPA 8260C	GC-MS	Dichlorodifluoromethane (Freon 12)
Aqueous/Solids	EPA 8260C	GC-MS	Dichlorofluoromethane (Freon 21)
Aqueous/Solids	EPA 8260C	GC-MS	Dichloromethane
Aqueous/Solids	EPA 8260C	GC-MS	Diethyl ether
Aqueous/Solids	EPA 8260C	GC-MS	Diisopropyl ether
Aqueous/Solids	EPA 8260C	GC-MS	Ethyl methacrylate
Aqueous/Solids	EPA 8260C	GC-MS	Ethyl tert-butyl ether
Aqueous/Solids	EPA 8260C	GC-MS	Ethylbenzene
Aqueous/Solids	EPA 8260C	GC-MS	Hexachlorobutadiene
Aqueous/Solids	EPA 8260C	GC-MS	Iodomethane
Aqueous/Solids	EPA 8260C	GC-MS	Isopropylbenzene
Aqueous/Solids	EPA 8260C	GC-MS	m- + p-Xylene
Aqueous/Solids	EPA 8260C	GC-MS	Methacrylonitrile
Aqueous/Solids	EPA 8260C	GC-MS	Methyl acetate
Aqueous/Solids	EPA 8260C	GC-MS	Methyl methacrylate
Aqueous/Solids	EPA 8260C	GC-MS	Methylcyclohexane
Aqueous/Solids	EPA 8260C	GC-MS	Methyl-tert-butyl ether (MTBE)
Aqueous/Solids	EPA 8260C	GC-MS	Napthalene
Aqueous/Solids	EPA 8260C	GC-MS	N-butylacetate
Aqueous/Solids	EPA 8260C	GC-MS	N-butylbenzene
Aqueous/Solids	EPA 8260C	GC-MS	N-heptane
Aqueous/Solids	EPA 8260C	GC-MS	N-propylbenzene
Aqueous/Solids	EPA 8260C	GC-MS	o-Xylene
Aqueous/Solids	EPA 8260C	GC-MS	Propionitrile
Aqueous/Solids	EPA 8260C	GC-MS	sec-butylbenzene
Aqueous/Solids	EPA 8260C	GC-MS	Styrene
Aqueous/Solids	EPA 8260C	GC-MS	tert-amyl methyl ether

Certificate of Accreditation: Supplement

ISO/IEC 17025:2005 and DoD-ELAP

Columbia Analytical Services

1565 Jefferson Road, Building 300, Suite 360, Rochester, NY 14609
Lisa Reyes Phone: 585-288-5380

Accreditation is granted to the facility to perform the following testing:

Matrix	Standard/Method	Technology	Analyte
Aqueous/Solids	EPA 8260C	GC-MS	tert-butylbenzene
Aqueous/Solids	EPA 8260C	GC-MS	Tetra hydrofuran
Aqueous/Solids	EPA 8260C	GC-MS	Tetrachloroethene
Aqueous/Solids	EPA 8260C	GC-MS	Toluene
Aqueous/Solids	EPA 8260C	GC-MS	trans-1,2-Dichloroethene
Aqueous/Solids	EPA 8260C	GC-MS	trans-1,3-Dichloropropene
Aqueous/Solids	EPA 8260C	GC-MS	trans-1,4-Dichloro-2-butene
Aqueous/Solids	EPA 8260C	GC-MS	Trichloroethene
Aqueous/Solids	EPA 8260C	GC-MS	Trichlorofluoromethane (Freon 11)
Aqueous/Solids	EPA 8260C	GC-MS	Vinyl acetate
Aqueous/Solids	EPA 8260C	GC-MS	Vinyl chloride
Aqueous/Solids	EPA 8260C	GC-MS	Xylenes, total
Aqueous/Solids	EPA 8270D	GC-MS	1,2,4,5-Tetrachlorobenzene
Aqueous/Solids	EPA 8270D	GC-MS	1,2,4-Trichlorobenzene
Aqueous/Solids	EPA 8270D	GC-MS	1,2-Dichlorobenzene
Aqueous/Solids	EPA 8270D	GC-MS	1,2-Diphenylhydrazine
Aqueous/Solids	EPA 8270D	GC-MS	1,3,5-Trinitrobenzene
Aqueous/Solids	EPA 8270D	GC-MS	1,3-Dichlorobenzene
Aqueous/Solids	EPA 8270D	GC-MS	1,3-Dinitrobenzene
Aqueous/Solids	EPA 8270D	GC-MS	1,4-Dichlorobenzene
Aqueous/Solids	EPA 8270D	GC-MS	1,4-Dioxane
Aqueous/Solids	EPA 8270D	GC-MS	1,4-Naphthoquinone
Aqueous/Solids	EPA 8270D	GC-MS	1-Methyl-2-pyrrolidinone
Aqueous/Solids	EPA 8270D	GC-MS	1-Methylnaphthalene
Aqueous/Solids	EPA 8270D	GC-MS	1-Naphthylamine
Aqueous/Solids	EPA 8270D	GC-MS	2,3,4,6-Tetrachlorophenol
Aqueous/Solids	EPA 8270D	GC-MS	2,4,5-Trichlorophenol
Aqueous/Solids	EPA 8270D	GC-MS	2,4,6-Trichlorophenol
Aqueous/Solids	EPA 8270D	GC-MS	2,4-Dichlorophenol
Aqueous/Solids	EPA 8270D	GC-MS	2,4-Dimethylphenol
Aqueous/Solids	EPA 8270D	GC-MS	2,4-Dinitrophenol
Aqueous/Solids	EPA 8270D	GC-MS	2,4-Dinitrotoluene
Aqueous/Solids	EPA 8270D	GC-MS	2,6-Dichlorophenol

Certificate of Accreditation: Supplement

ISO/IEC 17025:2005 and DoD-ELAP

Columbia Analytical Services

1565 Jefferson Road, Building 300, Suite 360, Rochester, NY 14609
Lisa Reyes Phone: 585-288-5380

Accreditation is granted to the facility to perform the following testing:

Matrix	Standard/Method	Technology	Analyte
Aqueous/Solids	EPA 8270D	GC-MS	2,6-Dinitrotoluene
Aqueous/Solids	EPA 8270D	GC-MS	2-Acetylaminofluorene
Aqueous/Solids	EPA 8270D	GC-MS	2-Chloronaphthalene
Aqueous/Solids	EPA 8270D	GC-MS	2-Chlorophenol
Aqueous/Solids	EPA 8270D	GC-MS	2-Methyl-5-nitroaniline (5-Nitro-o-toluidine)
Aqueous/Solids	EPA 8270D	GC-MS	2-Methylnaphthalene
Aqueous/Solids	EPA 8270D	GC-MS	2-Methylphenol
Aqueous/Solids	EPA 8270D	GC-MS	2-Naphthylamine
Aqueous/Solids	EPA 8270D	GC-MS	2-Nitroaniline
Aqueous/Solids	EPA 8270D	GC-MS	2-Nitrophenol
Aqueous/Solids	EPA 8270D	GC-MS	2-Picoline
Aqueous/Solids	EPA 8270D	GC-MS	3,3'-Dichlorobenzidine
Aqueous/Solids	EPA 8270D	GC-MS	3,3'-Dimethylbenzidine
Aqueous/Solids	EPA 8270D	GC-MS	3+4-Methylphenol
Aqueous/Solids	EPA 8270D	GC-MS	3-Methylcholanthrene
Aqueous/Solids	EPA 8270D	GC-MS	3-Nitroaniline
Aqueous/Solids	EPA 8270D	GC-MS	4,6-Dinitro-2-methylphenol
Aqueous/Solids	EPA 8270D	GC-MS	4-Aminobiphenyl
Aqueous/Solids	EPA 8270D	GC-MS	4-Bromophenyl-phenylether
Aqueous/Solids	EPA 8270D	GC-MS	4-Chloro-3-methylphenol
Aqueous/Solids	EPA 8270D	GC-MS	4-Chloroaniline
Aqueous/Solids	EPA 8270D	GC-MS	4-Chlorophenyl-phenylether
Aqueous/Solids	EPA 8270D	GC-MS	4-Nitroaniline
Aqueous/Solids	EPA 8270D	GC-MS	4-Nitrophenol
Aqueous/Solids	EPA 8270D	GC-MS	4-Nitroquinoline-1-oxide
Aqueous/Solids	EPA 8270D	GC-MS	7,12-Dimethylbenz(a)anthracene
Aqueous/Solids	EPA 8270D	GC-MS	α,α-Dimethylphenethylamine
Aqueous/Solids	EPA 8270D	GC-MS	Acenaphthene
Aqueous/Solids	EPA 8270D	GC-MS	Acenaphthylene
Aqueous/Solids	EPA 8270D	GC-MS	Acetophenone
Aqueous/Solids	EPA 8270D	GC-MS	Aniline
Aqueous/Solids	EPA 8270D	GC-MS	Anthracene
Aqueous/Solids	EPA 8270D	GC-MS	Aramite

Certificate of Accreditation: Supplement

ISO/IEC 17025:2005 and DoD-ELAP

Columbia Analytical Services

1565 Jefferson Road, Building 300, Suite 360, Rochester, NY 14609
Lisa Reyes Phone: 585-288-5380

Accreditation is granted to the facility to perform the following testing:

Matrix	Standard/Method	Technology	Analyte
Aqueous/Solids	EPA 8270D	GC-MS	Atrazine
Aqueous/Solids	EPA 8270D	GC-MS	Benzaldehyde
Aqueous/Solids	EPA 8270D	GC-MS	Benzidine
Aqueous/Solids	EPA 8270D	GC-MS	Benzo(a)anthracene
Aqueous/Solids	EPA 8270D	GC-MS	Benzo(a)pyrene
Aqueous/Solids	EPA 8270D	GC-MS	Benzo(b)fluoranthene
Aqueous/Solids	EPA 8270D	GC-MS	Benzo(g,h,i)perylene
Aqueous/Solids	EPA 8270D	GC-MS	Benzo(k)fluoranthene
Aqueous/Solids	EPA 8270D	GC-MS	Benzoic acid
Aqueous/Solids	EPA 8270D	GC-MS	Benzyl alcohol
Aqueous/Solids	EPA 8270D	GC-MS	Biphenyl
Aqueous/Solids	EPA 8270D	GC-MS	Bis(1-chloroisopropyl)ether
Aqueous/Solids	EPA 8270D	GC-MS	Bis(-2-chloroethoxy)methane
Aqueous/Solids	EPA 8270D	GC-MS	Bis(2-chloroethyl)ether
Aqueous/Solids	EPA 8270D	GC-MS	Bis(2-ethylhexyl)phthalate
Aqueous/Solids	EPA 8270D	GC-MS	Butyl benzyl phthalate
Aqueous/Solids	EPA 8270D	GC-MS	Caprolactam
Aqueous/Solids	EPA 8270D	GC-MS	Carbazole
Aqueous/Solids	EPA 8270D	GC-MS	Chlorobenzilate
Aqueous/Solids	EPA 8270D	GC-MS	Chrysene
Aqueous/Solids	EPA 8270D	GC-MS	Cyclohexane, isothiocyanato-
Aqueous/Solids	EPA 8270D	GC-MS	Diallate
Aqueous/Solids	EPA 8270D	GC-MS	Dibenzo(a,h)anthracene
Aqueous/Solids	EPA 8270D	GC-MS	Dibenzofuran
Aqueous/Solids	EPA 8270D	GC-MS	Diethylphthalate
Aqueous/Solids	EPA 8270D	GC-MS	Dimethoate
Aqueous/Solids	EPA 8270D	GC-MS	Dimethyl phthalate
Aqueous/Solids	EPA 8270D	GC-MS	Di-n-butylphthalate
Aqueous/Solids	EPA 8270D	GC-MS	Di-n-octyl phthalate
Aqueous/Solids	EPA 8270D	GC-MS	Dinoseb
Aqueous/Solids	EPA 8270D	GC-MS	Diphenylamine
Aqueous/Solids	EPA 8270D	GC-MS	Disulfoton
Aqueous/Solids	EPA 8270D	GC-MS	Ethyl methanesulfonate

Certificate of Accreditation: Supplement

ISO/IEC 17025:2005 and DoD-ELAP

Columbia Analytical Services

1565 Jefferson Road, Building 300, Suite 360, Rochester, NY 14609
Lisa Reyes Phone: 585-288-5380

Accreditation is granted to the facility to perform the following testing:

Matrix	Standard/Method	Technology	Analyte
Aqueous/Solids	EPA 8270D	GC-MS	Fluoranthene
Aqueous/Solids	EPA 8270D	GC-MS	Fluorene
Aqueous/Solids	EPA 8270D	GC-MS	Hexachlorobenzene
Aqueous/Solids	EPA 8270D	GC-MS	Hexachlorobutadiene
Aqueous/Solids	EPA 8270D	GC-MS	Hexachlorocyclopentadiene
Aqueous/Solids	EPA 8270D	GC-MS	Hexachloroethane
Aqueous/Solids	EPA 8270D	GC-MS	Hexachlorophene
Aqueous/Solids	EPA 8270D	GC-MS	Hexachloropropene
Aqueous/Solids	EPA 8270D	GC-MS	Indeno(1,2,3-cd)pyrene
Aqueous/Solids	EPA 8270D	GC-MS	Isodrin
Aqueous/Solids	EPA 8270D	GC-MS	Isophorone
Aqueous/Solids	EPA 8270D	GC-MS	Isosafrole
Aqueous/Solids	EPA 8270D	GC-MS	Methapyrilene
Aqueous/Solids	EPA 8270D	GC-MS	Methyl methanesulfonate
Aqueous/Solids	EPA 8270D	GC-MS	Methyl parathion
Aqueous/Solids	EPA 8270D	GC-MS	Naphthalene
Aqueous/Solids	EPA 8270D	GC-MS	Nitrobenzene
Aqueous/Solids	EPA 8270D	GC-MS	N-nitrosodiethylamine
Aqueous/Solids	EPA 8270D	GC-MS	N-nitrosodimethylamine
Aqueous/Solids	EPA 8270D	GC-MS	N-nitrosodi-n-butylamine
Aqueous/Solids	EPA 8270D	GC-MS	N-nitroso-di-n-propylamine
Aqueous/Solids	EPA 8270D	GC-MS	N-nitrosodiphenylamine
Aqueous/Solids	EPA 8270D	GC-MS	N-nitrosomethylethylamine
Aqueous/Solids	EPA 8270D	GC-MS	N-nitrosomorpholine
Aqueous/Solids	EPA 8270D	GC-MS	N-nitrosopiperidine
Aqueous/Solids	EPA 8270D	GC-MS	N-nitrosopyrolidine
Aqueous/Solids	EPA 8270D	GC-MS	Octachlorostyrene
Aqueous/Solids	EPA 8270D	GC-MS	o,o,o-triethyl phosphorothioate
Aqueous/Solids	EPA 8270D	GC-MS	o-toluidine
Aqueous/Solids	EPA 8270D	GC-MS	Parathion (ethyl)
Aqueous/Solids	EPA 8270D	GC-MS	p-dimethylaminoazobenzene
Aqueous/Solids	EPA 8270D	GC-MS	Pentachlorobenzene
Aqueous/Solids	EPA 8270D	GC-MS	Pentachloroethane

Certificate of Accreditation: Supplement

ISO/IEC 17025:2005 and DoD-ELAP

Columbia Analytical Services

1565 Jefferson Road, Building 300, Suite 360, Rochester, NY 14609
Lisa Reyes Phone: 585-288-5380

Accreditation is granted to the facility to perform the following testing:

Matrix	Standard/Method	Technology	Analyte
Aqueous/Solids	EPA 8270D	GC-MS	Pentachloronitrobenzene
Aqueous/Solids	EPA 8270D	GC-MS	Pentachlorophenol
Aqueous/Solids	EPA 8270D	GC-MS	Phenacetin
Aqueous/Solids	EPA 8270D	GC-MS	Phenanthrene
Aqueous/Solids	EPA 8270D	GC-MS	Phenol
Aqueous/Solids	EPA 8270D	GC-MS	Phorate
Aqueous/Solids	EPA 8270D	GC-MS	Phthalimide
Aqueous/Solids	EPA 8270D	GC-MS	Pyrene
Aqueous/Solids	EPA 8270D	GC-MS	Pyridine
Aqueous/Solids	EPA 8270D	GC-MS	Safrole
Aqueous/Solids	EPA 8270D	GC-MS	Sulfotepp
Aqueous/Solids	EPA 8270D	GC-MS	Thionazin
Aqueous/Solids	EPA 8270D	GC-MS-LL	1,4-Dioxane
Aqueous/Solids	EPA 8270D	GC-MS-LL	1-Methylnaphthalene
Aqueous/Solids	EPA 8270D	GC-MS-LL	2-Methylnaphthalene
Aqueous/Solids	EPA 8270D	GC-MS-LL	Acenaphthene
Aqueous/Solids	EPA 8270D	GC-MS-LL	Acenaphthylene
Aqueous/Solids	EPA 8270D	GC-MS-LL	Anthracene
Aqueous/Solids	EPA 8270D	GC-MS-LL	Benzo(a)anthracene
Aqueous/Solids	EPA 8270D	GC-MS-LL	Benzo(a)pyrene
Aqueous/Solids	EPA 8270D	GC-MS-LL	Benzo(b)fluoranthene
Aqueous/Solids	EPA 8270D	GC-MS-LL	Benzo(g,h,i)perylene
Aqueous/Solids	EPA 8270D	GC-MS-LL	Benzo(k)fluoranthene
Aqueous/Solids	EPA 8270D	GC-MS-LL	Bis(2-ethylhexyl)phthalate
Aqueous/Solids	EPA 8270D	GC-MS-LL	Butyl benzyl phthalate
Aqueous/Solids	EPA 8270D	GC-MS-LL	Carbazole
Aqueous/Solids	EPA 8270D	GC-MS-LL	Chrysene
Aqueous/Solids	EPA 8270D	GC-MS-LL	Dibenzo(a,h)anthracene
Aqueous/Solids	EPA 8270D	GC-MS-LL	Dibenzofuran
Aqueous/Solids	EPA 8270D	GC-MS-LL	Diethyl phthalate
Aqueous/Solids	EPA 8270D	GC-MS-LL	Dimethyl phthalate
Aqueous/Solids	EPA 8270D	GC-MS-LL	Di-n-butyl phthalate
Aqueous/Solids	EPA 8270D	GC-MS-LL	Di-n-octyl phthalate

Certificate of Accreditation: Supplement

ISO/IEC 17025:2005 and DoD-ELAP

Columbia Analytical Services

1565 Jefferson Road, Building 300, Suite 360, Rochester, NY 14609
Lisa Reyes Phone: 585-288-5380

Accreditation is granted to the facility to perform the following testing:

Matrix	Standard/Method	Technology	Analyte
Aqueous/Solids	EPA 8270D	GC-MS-LL	Fluoranthene
Aqueous/Solids	EPA 8270D	GC-MS-LL	Fluorene
Aqueous/Solids	EPA 8270D	GC-MS-LL	Hexachlorobenzene
Aqueous/Solids	EPA 8270D	GC-MS-LL	Indeno(1,2,3-cd)pyrene
Aqueous/Solids	EPA 8270D	GC-MS-LL	Naphthalene
Aqueous/Solids	EPA 8270D	GC-MS-LL	Nitrobenzene
Aqueous/Solids	EPA 8270D	GC-MS-LL	Octachlorostyrene
Aqueous/Solids	EPA 8270D	GC-MS-LL	Phenanthrene
Aqueous/Solids	EPA 8270D	GC-MS-LL	Pyrene
Aqueous/Solids	EPA 8270D	GC-MS-LL	Pyridine
Aqueous/Solids	EPA 9012A, B	UV-VIS	Cyanide, total
Aqueous/Solids	EPA 9034	Titration	Sulfide, acid soluble
Aqueous/Solids	EPA 9056A	IC	Bromide
Aqueous/Solids	EPA 9056A	IC	Chloride
Aqueous/Solids	EPA 9056A	IC	Fluoride
Aqueous/Solids	EPA 9056A	IC	Nitrate as Nitrogen
Aqueous/Solids	EPA 9056A	IC	Nitrite as Nitrogen
Aqueous/Solids	EPA 9056A	IC	Sulfate
Aqueous/Solids	GEN-AVS	Titrimetric	Acid Volatile Sulfide
Aqueous/Solids	EPA 8330B	HPLC	1,3,5-Trinitrobenzene
Aqueous/Solids	EPA 8330B	HPLC	1,3-Dinitrobenzene
Aqueous/Solids	EPA 8330B	HPLC	2,4,6-Trinitrotoluene (TNT)
Aqueous/Solids	EPA 8330B	HPLC	2,4-Dinitrotoluene
Aqueous/Solids	EPA 8330B	HPLC	2,6-Dinitrotoluene
Aqueous/Solids	EPA 8330B	HPLC	2-Amino 4,6-Dinitrotoluene
Aqueous/Solids	EPA 8330B	HPLC	2-Nitrotoluene
Aqueous/Solids	EPA 8330B	HPLC	3,5-Dinitroaniline
Aqueous/Solids	EPA 8330B	HPLC	3-Nitrotoluene
Aqueous/Solids	EPA 8330B	HPLC	4-Amino 2,6-Dinitrotoluene
Aqueous/Solids	EPA 8330B	HPLC	4-Nitrotoluene
Aqueous/Solids	EPA 8330B	HPLC	Hexahydro 1,3,5-Trinitro 1,3,5-Triazine
Aqueous/Solids	EPA 8330B	HPLC	Methyl 2,4,6 Trinitrophenylnitramine
Aqueous/Solids	EPA 8330B	HPLC	Nitrobenzene
Aqueous/Solids	EPA 8330B	HPLC	Nitroglycerin

Certificate of Accreditation: Supplement

ISO/IEC 17025:2005 and DoD-ELAP

Columbia Analytical Services

1565 Jefferson Road, Building 300, Suite 360, Rochester, NY 14609
Lisa Reyes Phone: 585-288-5380

Accreditation is granted to the facility to perform the following testing:

Matrix	Standard/Method	Technology	Analyte
Aqueous/Solids	EPA 8330B	HPLC	Octahydro 1.3.5.7 Tetranitro 1,3,5,7 Tetraz
Aqueous/Solids	EPA 8330B	HPLC	Pentaerythritol Tetranitrate (PETN)
Aqueous/Solids	HPLC-METACID	HPLC	Acetic Acid
Aqueous/Solids	HPLC-METACID	HPLC	Butanoic Acid (Butyric Acid)
Aqueous/Solids	HPLC-METACID	HPLC	Lactic Acid
Aqueous/Solids	HPLC-METACID	HPLC	Propionic Acid
Aqueous/Solids	HPLC-METACID	HPLC	Pyruvic Acid

Matrix	Standard/Method	Technology	Analyte
Aqueous	EPA 3010A	Acid Digestion	Metals prep
Aqueous	EPA 3510C	SF Extraction	Semivolatiles, pesticides, PCBs, DRO
Aqueous	EPA 5030B	P&T	Volatiles
Solids	EPA 3050B	Acid Digestion	Metals prep
Solids	EPA 3060A	Digestion	Hexavalent chromium digestion
Solids	EPA 3541	SOX Extraction	Semivolatiles, pesticides, PCBs, DRO
Solids	EPA 5035	P&T closed	Volatiles
Aqueous/Solids	EPA 1311	TCLP	Physical Extraction
Aqueous/Solids	EPA 1312	SPLP	Physical Extraction
Aqueous/Solids	EPA 3620B	Florisil Cleanup	Semivolatiles, pesticides, PCBs
Aqueous/Solids	EPA 3660B	Sulfur Cleanup	Semivolatiles, pesticides, PCBs
Aqueous/Solids	EPA 3665A	Sulfuric Acid Cleanup	PCBs
Aqueous/Solids	EPA 9012A, B	Distillation	Cyanide
Aqueous/Solids	EPA 9030B	Distillation	Sulfide, acid soluble

SCOPE OF ACCREDITATION TO ISO/IEC 17025-2005

ENVIRONMENTAL CONSERVATION LABORATORIES – JACKSONVILLE
4810 Executive Park Court, Suite 111
Jacksonville, FL 32216
Denise K. Stern Phone: 904 296 3007
Email address: dstern@encolabs.com

ENVIRONMENTAL

Valid To: April 30, 2014 Certificate Number: 3000.02

In recognition of the successful completion of the A2LA evaluation process, (including an assessment of the laboratory's compliance with ISO IEC 17025:2005, the 2003 NELAC Chapter 5 Standard, and the requirements of the DoD Environmental Laboratory Accreditation Program (DoD ELAP) as detailed in the current DoD Quality Systems Manual for Environmental Laboratories) accreditation is granted to this laboratory to perform recognized EPA methods using the following testing technologies and in the analyte categories identified below:

Parameter/Analyte	Non-Potable Water	Solid Hazardous Waste	Air
Isopropyl alcohol (2-Propanol)	EPA 8015C	NA	ENCO VGCMS-07
4-Ethyltoluene	NA	NA	ENCO VGCMS-07
Cyclohexane	EPA 8260B	EPA 8260B	ENCO VGCMS-07
1,1,1-Trichloroethane	EPA 624, 8260B	EPA 8260B	EPA TO-14A, EPA TO-15
1,1,2,2-Tetrachloroethane	EPA 624, 8260B	EPA 8260B	EPA TO-14A, EPA TO-15
1,1,2-Trichloro-1,2,2-trifluoroethane	EPA 8260B	EPA 8260B	EPA TO-14A
1,1,2-Trichloroethane	EPA 624, 8260B	EPA 8260B	EPA TO-14A, EPA TO-15
1,1-Dichloroethane	EPA 624, 8260B	EPA 8260B	EPA TO-14A, EPA TO-15
1,1-Dichloroethylene	EPA 624, 8260B	EPA 8260B	EPA TO-14A, EPA TO-15
1,2-Dichloro-1,1,2,2-tetrafluoroethane	NA	NA	EPA TO-14A
1,3-Butadiene	NA	NA	EPA TO-15
1,4-Dioxane	EPA 8260B	EPA 8260B	EPA TO-15
2,2,4-Trimethylpentane	NA	NA	EPA TO-15
Benzyl chloride	NA	NA	EPA TO-15
n-Hexane	NA	NA	EPA TO-15
2-Hydroxy isobutyric acid	ENCO VGC-13	NA	NA
Acetic acid	ENCO VGC-13	NA	NA
Butyric acid (Butanoic acid)	ENCO VGC-13	NA	NA
Hexanoic acid	ENCO VGC-13	NA	NA
Isohexanoic acid (4-methyl-pentanoic acid)	ENCO VGC-13	NA	NA
Isopentanoic acid (3-methyl-butanoic acid)	ENCO VGC-13	NA	NA
Lactic acid	ENCO VGC-13	NA	NA
Pentanoic acid	ENCO VGC-13	NA	NA

5301 Buckeystown Pike, Suite 350 | Frederick, Maryland 21704-8373 | Phone: 301 644 3248 | Fax: 301 662 2974 | www.A2LA.org

Parameter/Analyte	Non-Potable Water	Solid Hazardous Waste	Air
Propionic acid (Propanoic acid)	ENCO VGC-13	NA	NA
Pyruvic acid	ENCO VGC-13	NA	NA
Propylene glycol	ENCO VGC-18	NA	NA
Ethyl acetate	EPA 8015C	NA	ENCO VGCMS-07
Ethylene glycol	EPA 8015C	NA	NA
Diesel range organics (DRO)	EPA 8015C	EPA 8015C	NA
Gasoline range organics (GRO)	EPA 8015C	EPA 8015C	NA
Isobutyl alcohol (2-Methyl-1-propanol)	EPA 8015C, 8260B	EPA 8260B	NA
Methanol	EPA 8015C	EPA 8015C	NA
n-Butyl alcohol	EPA 8015C	NA	NA
n-Propanol	EPA 8015C	NA	NA
1,2-Dibromo-3-chloropropane (DBCP)	EPA 504, 504.1, 8011, 8260B	EPA 8260B	NA
1,2-Dibromoethane (EDB, Ethylene dibromide)	EPA 504, 504.1, 8011, 8260B	EPA 8260B	EPA TO-14A, EPA TO-15
1,2-Dichlorobenzene	EPA 624, 8260B, 8270D	EPA 8260B, 8270D	EPA TO-14A, EPA TO-15
1,2-Dichloroethane	EPA 624, 8260B	EPA 8260B	EPA TO-14A, EPA TO-15
1,2-Dichloropropane	EPA 624, 8260B	EPA 8260B	EPA TO-14A, EPA TO-15
1,3-Dichlorobenzene	EPA 624, 8260B, 8270D	EPA 8260B, 8270D	EPA TO-14A, EPA TO-15
1,4-Dichlorobenzene	EPA 624, 8260B, 8270D	EPA 8260B, 8270D	EPA TO-14A, EPA TO-15
2-Chloroethyl vinyl ether	EPA 624, 8260B	EPA 8260B	NA
Acrolein (Propenal)	EPA 624, 8260B	EPA 8260B	NA
Acrylonitrile	EPA 624, 8260B	EPA 8260B	NA
Benzene	EPA 624, 8260B	EPA 8260B	EPA TO-14A, EPA TO-15
Bromodichloromethane	EPA 624, 8260B	EPA 8260B	ENCO VGCMS-07
Bromoform	EPA 624, 8260B	EPA 8260B	EPA TO-15
Carbon tetrachloride	EPA 624, 8260B	EPA 8260B	EPA TO-14A, EPA TO-15
Chlorobenzene	EPA 624, 8260B	EPA 8260B	EPA TO-14A, EPA TO-15
Chloroethane	EPA 624, 8260B	EPA 8260B	EPA TO-14A, EPA TO-15
Chloroform	EPA 624, 8260B	EPA 8260B	EPA TO-14A, EPA TO-15
cis-1,3-Dichloropropene	EPA 624, 8260B	EPA 8260B	EPA TO-14A, EPA TO-15
Dibromochloromethane	EPA 624, 8260B	EPA 8260B	ENCO VGCMS-07
Ethylbenzene	EPA 624, 8260B	EPA 8260B	EPA TO-14A, EPA TO-15
Methyl bromide (Bromomethane)	EPA 624, 8260B	EPA 8260B	EPA TO-14A, EPA TO-15
Methyl chloride (Chloromethane)	EPA 624, 8260B	EPA 8260B	EPA TO-14A, EPA TO-15
Methylene chloride	EPA 624, 8260B	EPA 8260B	EPA TO-14A, EPA TO-15
Tetrachloroethylene	EPA 624, 8260B	EPA 8260B	EPA TO-14A, EPA TO-15
Toluene	EPA 624, 8260B	EPA 8260B	EPA TO-14A, EPA TO-15
trans-1,2-Dichloroethylene	EPA 624, 8260B	EPA 8260B	EPA TO-15
trans-1,3-Dichloropropylene	EPA 624, 8260B	EPA 8260B	EPA TO-14A, EPA TO-15
Trichloroethene	EPA 624, 8260B	EPA 8260B	EPA TO-14A, EPA TO-15
Trichlorofluoromethane	EPA 624, 8260B	EPA 8260B	EPA-TO-14A
Vinyl chloride	EPA 624, 8260B	EPA 8260B	EPA TO-14A, EPA TO-15
Xylene (total)	EPA 624, 8260B	EPA 8260B	EPA TO-14A, EPA TO-15
1,1,1,2-Tetrachloroethane	EPA 8260B	EPA 8260B	NA
1,1-Dichloropropene	EPA 8260B	EPA 8260B	NA
1,2,3-Trichlorobenzene	EPA 8260B	EPA 8260B	NA

Parameter/Analyte	Non-Potable Water	Solid Hazardous Waste	Air
1,2,3-Trichloropropane	EPA 8260B	EPA 8260B	NA
1,2,4-Trichlorobenzene	EPA 8260B, 625, 8270D	EPA 8260B, 8270D	EPA TO-14A, EPA TO-15
1,2,4-Trimethylbenzene	EPA 8260B	EPA 8260B	EPA TO-14A
1,3,5-Trimethylbenzene	EPA 8260B	EPA 8260B	EPA TO-14A
1,3-Dichloropropane	EPA 8260B	EPA 8260B	NA
2,2-Dichloropropane	EPA 8260B	EPA 8260B	NA
2-Butanone (Methyl ethyl ketone, MEK)	EPA 8260B, 8015C	EPA 8260B	EPA TO-15
2-Chlorotoluene	EPA 8260B	EPA 8260B	NA
2-Hexanone	EPA 8260B	EPA 8260B	ENCO VGCMS-07
4-Chlorotoluene	EPA 8260B	EPA 8260B	NA
4-Methyl-2-pentanone (MIBK)	EPA 8260B, 8015C	EPA 8260B	EPA TO-15
Acetone	EPA 8260B	EPA 8260B	ENCO VGCMS-07
Acetonitrile	EPA 8260B	EPA 8260B	NA
Allyl chloride (3-Chloropropene)	EPA 8260B	EPA 8260B	EPA TO-15
Bromobenzene	EPA 8260B	EPA 8260B	NA
Bromochloromethane	EPA 8260B	EPA 8260B	NA
Carbon disulfide	EPA 8260B	EPA 8260B	EPA TO-15
Chloroprene	EPA 8260B	EPA 8260B	NA
cis-1,2-Dichloroethylene	EPA 8260B	EPA 8260B	EPA TO-14A, EPA TO-15
Dibromomethane	EPA 8260B	EPA 8260B	NA
Dichlorodifluoromethane	EPA 8260B	EPA 8260B	EPA TO-14A
Diethyl ether	EPA 8260B	EPA 8260B	NA
Ethanol	EPA 8260B, 8015C	EPA 8260B	NA
Ethyl methacrylate	EPA 8260B	EPA 8260B	NA
Hexachlorobutadiene	EPA 8260B, 625, 8270D	EPA 8260B, 8270D	EPA TO-14A, EPA TO-15
Iodomethane (Methyl iodine)	EPA 8260B	EPA 8260B	NA
Isopropylbenzene	EPA 8260B	EPA 8260B	NA
Isopropyl ether	EPA 8260B	EPA 8260B	NA
Methacrylonitrile	EPA 8260B	EPA 8260B	NA
Methyl Acetate	EPA 8260B	EPA 8260B	NA
Methyl Cyclohexane	EPA 8260B	EPA 8260B	NA
Methyl methacrylate	EPA 8260B	EPA 8260B	NA
Methyl tert-butyl ether (MTBE)	EPA 8260B	EPA 8260B	EPA TO-15
m.p-Xylene	EPA 8260B	EPA 8260B	EPA TO-14A, EPA TO-15
Naphthalene	EPA 8260B, 625 Scan-Sim, 8270D Scan-Sim	EPA 8260B, 8270D Scan-Sim	NA
n-Butyl benzene	EPA 8260B	EPA 8260B	NA
n-Propyl benzene	EPA 8260B	EPA 8260B	NA
o-Xylene	EPA 8260B	EPA 8260B	EPA TO-14A, EPA TO-15
p-Isopropyltoluene	EPA 8260B	EPA 8260B	NA
Propionitrile (Ethyl cyanide)	EPA 8260B	EPA 8260B	NA
sec-Butylbenzene	EPA 8260B	EPA 8260B	NA
Styrene	EPA 8260B	EPA 8260B	EPA TO-14A, EPA TO-15
tert-Butylbenzene	EPA 8260B	EPA 8260B	NA
trans-1,4-Dichloro-2-butene	EPA 8260B	EPA 8260B	NA
Vinyl acetate	EPA 8260B	EPA 8260B	EPA TO-15
4,4'-DDD	EPA 608, 8081B	EPA 8081B	NA
4,4'-DDE	EPA 608, 8081B	EPA 8081B	NA

Parameter/Analyte	Non-Potable Water	Solid Hazardous Waste	Air
4,4'-DDT	EPA 608, 8081B	EPA 8081B	NA
Aldrin	EPA 608, 8081B	EPA 8081B	NA
alpha-BHC (alpha-Hexachlorocyclohexane)	EPA 608, 8081B	EPA 8081B	NA
Aroclor-1016(PCB-1016)	EPA 608, 8082A	EPA 8082A	NA
Aroclor-1221(PCB-1221)	EPA 608, 8082A	EPA 8082A	NA
Aroclor-1232(PCB-1232)	EPA 608, 8082A	EPA 8082A	NA
Aroclor-1242(PCB-1242)	EPA 608, 8082A	EPA 8082A	NA
Aroclor-1248(PCB-1248)	EPA 608, 8082A	EPA 8082A	NA
Aroclor-1254(PCB-1254)	EPA 608, 8082A	EPA 8082A	NA
Aroclor-1260(PCB-1260)	EPA 608, 8082A	EPA 8082A	NA
beta-BHC (beta-Hexachlorocyclohexane)	EPA 608, 8081B	EPA 8081B	NA
Chlordane(tech.)	EPA 608, 8081B	EPA 8081B	NA
delta-BHC	EPA 608, 8081B	EPA 8081B	NA
Dieldrin	EPA 608, 8081B	EPA 8081B	NA
Endosulfan I	EPA 608, 8081B	EPA 8081B	NA
Endosulfan II	EPA 608, 8081B	EPA 8081B	NA
Endosulfan sulfate	EPA 608, 8081B	EPA 8081B	NA
Endrin	EPA 608, 8081B	EPA 8081B	NA
Endrin aldehyde	EPA 608, 8081B	EPA 8081B	NA
gamma-BHC (Lindane,gamma-Hexachlorocyclohexane)	EPA 608, 8081B	EPA 8081B	NA
Heptachlor	EPA 608, 8081B	EPA 8081B	NA
Heptachlor epoxide	EPA 608, 8081B	EPA 8081B	NA
Toxaphene (Chlorinated camphene)	EPA 608, 8081B	EPA 8081B	NA
alpha-Chlordane	EPA 8081B	EPA 8081B	NA
Endrin ketone	EPA 8081B	EPA 8081B	NA
gamma-Chlordane	EPA 8081B	EPA 8081B	NA
Isodrin	EPA 8081B, 8270D	EPA 8081B, 8270D	NA
Methoxychlor	EPA 8081B	EPA 8081B	NA
Mirex	EPA 8081B	EPA 8081B	NA
Kepone	EPA 8270D	EPA 8270D	NA
o,o,o-Triethylphosphorothioate	EPA 8270D	EPA 8270D	NA
Parathion,ethyl	EPA 8270D	EPA 8270D	NA
Phorate	EPA 8270D	EPA 8270D	NA
Sulfotepp	EPA 8270D	EPA 8270D	NA
Thionazin (Zinophos)	EPA 8270D	EPA 8270D	NA
Dalapon	EPA 615, 8151A	EPA 8151A	NA
3,5-DCBA	EPA 615, 8151A	EPA 8151A	NA
4-Nitrophenol	EPA 615, 8151A, 625, 8270D	EPA 8270D, 8151A	NA
Dicamba	EPA 615, 8151A	EPA 8151A	NA
MCPP	EPA 615, 8151A	EPA 8151A	NA
MCPA	EPA 615, 8151A	EPA 8151A	NA
Dichlorprop	EPA 615, 8151A	EPA 8151A	NA
2,4-D	EPA 615, 8151A	EPA 8151A	NA
Pentachlorophenol	EPA 615, 8151A, 625, 8270D	EPA 8151A, 8270D	NA

Parameter/Analyte	Non-Potable Water	Solid Hazardous Waste	Air
2,4,5-TP (Silvex)	EPA 615, 8151A	EPA 8151A	NA
Chloramben	EPA 615, 8151A	EPA 8151A	NA
2,4,5-T	EPA 615, 8151A	EPA 8151A	NA
2,4-DB	EPA 615, 8151A	EPA 8151A	NA
Bentazon	EPA 615, 8151A	EPA 8151A	NA
Picloram	EPA 615, 8151A	EPA 8151A	NA
Dinoseb	EPA 615, 8151A, 625, 8270D	EPA 8151A, 8270D	NA
Dacthal	EPA 615, EPA 8151A	EPA 8151A	NA
Acifluorfen	EPA 615, EPA 8151A	EPA 8151A	NA
2,4-DCAA	EPA 615, EPA 8151A	EPA 8151A	NA
Total coliforms	SM9222B	NA	NA
Fecal coliforms	SM9222D	NA	NA
Aluminum	EPA 200.7, 6010C	EPA 6010C	NA
Antimony	EPA 200.7, 6010C	EPA 6010C	NA
Arsenic	EPA 200.7, 6010C	EPA 6010C	NA
Barium	EPA 200.7, 6010C	EPA 6010C	NA
Beryllium	EPA 200.7, 6010C	EPA 6010C	NA
Boron	EPA 200.7, 6010C	EPA 6010C	NA
Cadmium	EPA 200.7, 6010C	EPA 6010C	NA
Calcium	EPA 200.7, 6010C	EPA 6010C	NA
Chromium	EPA 200.7, 6010C	EPA 6010C	NA
Cobalt	EPA 200.7, 6010C	EPA 6010C	NA
Copper	EPA 200.7, 6010C	EPA 6010C	NA
Hardness (calc.)	SM2340B	NA	NA
Iron	EPA 200.7, 6010C, SM18 3500-Fe D	EPA 6010C	NA
Lead	EPA 200.7, 6010C	EPA 6010C	NA
Lithium	EPA 200.7, 6010C	EPA 6010C	NA
Magnesium	EPA 200.7, 6010C	EPA 6010C	NA
Manganese	EPA 200.7, 6010C	EPA 6010C	NA
Molybdenum	EPA 200.7, 6010C	EPA 6010C	NA
Nickel	EPA 200.7, 6010C	EPA 6010C	NA
Potassium	EPA 200.7, 6010C	EPA 6010C	NA
Selenium	EPA 200.7, 6010C	EPA 6010C	NA
Silver	EPA 200.7, 6010C	EPA 6010C	NA
Sodium	EPA 200.7, 6010C	EPA 6010C	NA
Strontium	EPA 200.7, 6010C	EPA 6010C	NA
Thallium	EPA 200.7, 6010C	EPA 6010C	NA
Tin	EPA 200.7, 6010C	EPA 6010C	NA
Titanium	EPA 200.7, 6010C	EPA 6010C	NA
Vanadium	EPA 200.7, 6010C	EPA 6010C	NA
Zinc	EPA 200.7, 6010C	EPA 6010C	NA
Mercury	EPA 245.1, 7470A	EPA 7471B	NA
Sulfate	ASTM D516-90	NA	NA
Ignitability	EPA 1010A	EPA 1010A, EPA 1030	NA
Conductivity	EPA 120.1, SM18 2510B	NA	NA
Turbidity	EPA 180.1, SM18 2130B	NA	NA
Orthophosphate as P	EPA 365.3	NA	NA
Color	SM2120B	NA	NA
Alkalinity as CaC03	SM2320B	NA	NA

Parameter/Analyte	Non-Potable Water	Solid Hazardous Waste	Air
Hardness	SM2340C	NA	NA
Residue-nonfilterable (TSS)	SM2540D	NA	NA
Residue-total	SM2540B	NA	NA
Residue-filterable (TDS)	SM2540C	NA	NA
Chromium VI	SM3500-CrD(18th/19th Ed.)/UV-VIS	NA	NA
Chloride	SM4500-Cl-C	NA	NA
Total residual chlorine	SM4500-Cl-G	NA	NA
pH	SM18 4500-H+-B, EPA 9040C	EPA 9040C, 9045D	NA
Corrosivity (pH)	NA	EPA 9040C	NA
Paint Filter Liquids Test	NA	EPA 9095B	NA
Nitrite	SM4500-NO2 B	NA	NA
Biochemical oxygen demand	SM5210B	NA	NA
Carbonaceous BOD(CBOD)	SM5210B	NA	NA
Chemical oxygen demand	SM5220D, EPA 410.4	NA	NA
Total Organic Carbon	SM18 5310B, EPA 9060A	NA	NA
Total Petroleum Hydrocarbons (TPH)	FL-PRO	FL-PRO	NA
Oil & Grease (HEM)	EPA 1664A	EPA 9071B	NA
Total Petroleum Hydrocarbons (TPH) (HEM-SGT)	EPA 1664A	NA	NA
Carbon dioxide	RSK-175	NA	NA
Ethane	RSK-175	NA	NA
Ethylene	RSK-175	NA	NA
Methane	RSK-175	NA	NA
2,4,6-Trichlorophenol	EPA 625, 8270D	EPA 8270D	NA
2,4-Dichlorophenol	EPA 625, 8270D	EPA 8270D	NA
2,4-Dimethylphenol	EPA 625, 8270D	EPA 8270D	NA
2,4-Dinitrophenol	EPA 625, 8270D	EPA 8270D	NA
2,4-Dinitrotoluene (2,4-DNT)	EPA 625, 8270D	EPA 8270D	NA
2,6-Dinitrotoluene (2,6-DNT)	EPA 625, 8270D	EPA 8270D	NA
2-Chloronaphthalene	EPA 625, 8270D	EPA 8270D	NA
2-Chlorophenol	EPA 625, 8270D	EPA 8270D	NA
2-Methyl-4,6-dinitrophenol	EPA 625, 8270D	EPA 8270D	NA
2-Nitrophenol	EPA 625, 8270D	EPA 8270D	NA
3,3'-Dichlorobenzidine	EPA 625, 8270D	EPA 8270D	NA
4-Bromophenyl phenylether	EPA 625, 8270D	EPA 8270D	NA
4-Chloro-3-methylphenol	EPA 625, 8270D	EPA 8270D	NA
4-Chlorophenyl phenylether	EPA 625, 8270D	EPA 8270D	NA
Acenaphthene	EPA 625 Scan-Sim , 8270D Scan-Sim	EPA 8270D Scan-Sim	NA
Acenaphthylene	EPA 625 Scan-Sim , 8270D Scan-Sim	EPA 8270D Scan-Sim	NA
Aniline	EPA 625, 8270D	EPA 8270D	NA
Anthracene	EPA 625 Scan-Sim, 8270D Scan-Sim	EPA 8270D Scan-Sim	NA
Benzidine	EPA 625, 8270D	EPA 8270D	NA

Parameter/Analyte	Non-Potable Water	Solid Hazardous Waste	Air
Benzo(a)anthracene	EPA 625 Scan-Sim , 8270D Scan-Sim	EPA 8270D Scan-Sim	NA
Benzo(a)pyrene	EPA 625 Scan-Sim , 8270D Scan-Sim	EPA 8270D Scan-Sim	NA
Benzo(b)fluoranthene	EPA 625 Scan-Sim , 8270D Scan-Sim	EPA 8270D Scan-Sim	NA
Benzo(g,h,i)perylene	EPA 625 Scan-Sim , 8270D Scan-Sim	EPA 8270D Scan-Sim	NA
Benzo(k)fluoranthene	EPA 625 Scan-Sim , 8270D Scan-Sim	EPA 8270D Scan-Sim	NA
bis(2-Chloroethoxy)methane	EPA 625, 8270D	EPA 8270D	NA
bis(2-Chloroethyl) ether	EPA 625, 8270D	EPA 8270D	NA
bis(2-Chloroisopropyl) ether (2,2'-Oxybis(1-chloropropane)	EPA 625, 8270D	EPA 8270D	NA
bis(2-Ethylhexyl) phthalate(DEHP)	EPA 625, 8270D	EPA 8270D	NA
Butylbenzylphthalate	EPA 625, 8270D	EPA 8270D	NA
Chrysene	EPA 625 Scan-Sim , 8270D Scan-Sim	EPA 8270D Scan-Sim	NA
Dibenzo(a,h)anthracene	EPA 625 Scan-Sim, 8270D Scan-Sim	EPA 8270D Scan-Sim	NA
Diethyl phthalate	EPA 625, 8270D	EPA 8270D	NA
Dimethyl phthalate	EPA 625, 8270D	EPA 8270D	NA
Di-n-butyl phthalate	EPA 625, 8270D	EPA 8270D	NA
Di-n-octyl phthalate	EPA 625, 8270D	EPA 8270D	NA
Fluoranthene	EPA 625 Scan-Sim , 8270D Scan-Sim	EPA 8270D Scan-Sim	NA
Fluorene	EPA 625 Scan-Sim, 8270D Scan-Sim	EPA 8270D Scan-Sim	NA
Hexachlorobenzene	EPA 625, 8270D	EPA 8270D	NA
Hexachlorocyclopentadiene	EPA 625, 8270D	EPA 8270D	NA
Hexachloroethane	EPA 625, 8270D	EPA 8270D	NA
Indeno(1,2,3-cd)pyrene	EPA 625 Scan-Sim, 8270D Scan-Sim	EPA 8270D Scan-Sim	NA
Isophorone	EPA 625, 8270D	EPA 8270D	NA
Nitrobenzene	EPA 625, 8270D	EPA 8270D	NA
n-Nitrosodimethylamine	EPA 625, 8270D	EPA 8270D	NA
n-Nitrosodi-n-propylamine	EPA 625, 8270D	EPA 8270D	NA
n-Nitrosodiphenylamine	EPA 625, 8270D	EPA 8270D	NA
Phenanthrene	EPA 625 Scan-Sim , 8270D Scan-Sim	EPA 8270D Scan-Sim	NA
Phenol	EPA 625, 8270D	EPA 8270D	NA
Pyrene	EPA 625 Scan-Sim, 8270D Scan-Sim	EPA 8270D Scan-Sim	NA
Pyridine	EPA 625, 8270D	EPA 8270D	NA
1,1-Biphenyl	EPA 8270D	EPA 8270D	
1,2,4,5-Tetrachlorobenzene	EPA 8270D	EPA 8270D	NA
1,2-Diphenylhydrazine	EPA 8270D	EPA 8270D	NA
1,3,5-Trinitrobenzene (1,3,5-TNB)	EPA 8270D	EPA 8270D	NA

Parameter/Analyte	Non-Potable Water	Solid Hazardous Waste	Air
1,3-Dinitrobenzene (1,3-DNB)	EPA 8270D	EPA 8270D	NA
1,4-Naphthoquinone	EPA 8270D	EPA 8270D	NA
1,4-Phenylenediamine	EPA 8270D	EPA 8270D	NA
1-Methylnaphthalene	EPA 625 Scan-Sim, 8270D Scan-Sim	EPA 8270D Scan-Sim	NA
1-Naphthylamine	EPA 8270D	EPA 8270D	NA
2,3,4,6-Tetrachlorophenol	EPA 8270D	EPA 8270D	NA
2,4,5-Trichlorophenol	EPA 8270D	EPA 8270D	NA
2,6-Dichlorophenol	EPA 8270D	EPA 8270D	NA
2-Acetylaminofluorene	EPA 8270D	EPA 8270D	NA
2-Methylnaphthalene	EPA 625 Scan-Sim, 8270D Scan-Sim	EPA 8270D Scan-Sim	NA
2-Methylphenol (o-Cresol)	EPA 8270D	EPA 8270D	NA
2-Naphthylamine	EPA 8270D	EPA 8270D	NA
2-Nitroaniline	EPA 8270D	EPA 8270D	NA
2-Picoline (2-Methylpyridine)	EPA 8270D	EPA 8270D	NA
3,3'-Dimethylbenzidine	EPA 8270D	EPA 8270D	NA
3-Methylcholanthrene	EPA 8270D	EPA 8270D	NA
3-Methylphenol (m-Cresol)	EPA 8270D	EPA 8270D	NA
3-Nitroaniline	EPA 8270D	EPA 8270D	NA
4-Aminobiphenyl	EPA 8270D	EPA 8270D	NA
4-Chloroaniline	EPA 8270D	EPA 8270D	NA
4-Dimethyl aminoazobenzene	EPA 8270D	EPA 8270D	NA
4-Methylphenol (p-Cresol)	EPA 8270D	EPA 8270D	NA
4-Nitroaniline	EPA 8270D	EPA 8270D	NA
4-Nitroquinoline-n-oxide	EPA 8270D	EPA 8270D	NA
5-Nitro-o-toluidine	EPA 8270D	EPA 8270D	NA
7,12-Dimethylbenz(a)anthracene	EPA 8270D	EPA 8270D	NA
a-a-Dimethylphenethylamine	EPA 8270D	EPA 8270D	NA
Acetophenone	EPA 8270D	EPA 8270D	NA
Aramite	EPA 8270D	EPA 8270D	NA
Atrazine	EPA 8270D	EPA 8270D	NA
Benzaldehyde	EPA 8270D	EPA 8270D	NA
Benzoic acid	EPA 8270D	EPA 8270D	NA
Benzyl alcohol	EPA 8270D	EPA 8270D	NA
Caprolactam	EPA 8270D	EPA 8270D	NA
Carbazole	EPA 8270D	EPA 8270D	NA
Chlorobenzilate	EPA 8270D	EPA 8270D	NA
Cresol, Total	EPA 8270D	EPA 8270D	NA
Diallate	EPA 8270D	EPA 8270D	NA
Dibenzo(a,h)pyrene	EPA 8270D	EPA 8270D	NA
Dibenzofuran	EPA 8270D	EPA 8270D	NA
Dimethoate	EPA 8270D	EPA 8270D	NA
Diphenylamine	EPA 8270D	EPA 8270D	NA
Disulfoton	EPA 8270D	EPA 8270D	NA
DPH (as Azobenzene)	EPA 8270D	EPA 8270D	NA
Ethyl methanesulfonate	EPA 8270D	EPA 8270D	NA
Famphur	EPA 8270D	EPA 8270D	NA

Parameter/Analyte	Non-Potable Water	Solid Hazardous Waste	Air
Hexachlorophene	EPA 8270D	EPA 8270D	NA
Hexachloropropene	EPA 8270D	EPA 8270D	NA
Isosafrole	EPA 8270D	EPA 8270D	NA
Methapyrilene	EPA 8270D	EPA 8270D	NA
Methyl methane sulfonate	EPA 8270D	EPA 8270D	NA
Methyl parathion (Parathion,methyl)	EPA 8270D	EPA 8270D	NA
Nitroquinoline-1-oxide	EPA 8270D	EPA 8270D	NA
n-Nitrosodiethylamine	EPA 8270D	EPA 8270D	NA
n-Nitroso-di-n-butylamine	EPA 8270D	EPA 8270D	NA
n-Nitrosomethylethylamine	EPA 8270D	EPA 8270D	NA
n-Nitrosomorpholine	EPA 8270D	EPA 8270D	NA
n-Nitrosopiperidine	EPA 8270D	EPA 8270D	NA
n-Nitrosopyrrolidine	EPA 8270D	EPA 8270D	NA
o-Toluidine	EPA 8270D	EPA 8270D	NA
Pentachlorobenzene	EPA 8270D	EPA 8270D	NA
Pentachloroethane	EPA 8270D	EPA 8270D	NA
Pentachloronitrobenzene	EPA 8270D	EPA 8270D	NA
Phenacetin	EPA 8270D	EPA 8270D	NA
Pronamide (Kerb)	EPA 8270D	EPA 8270D	NA
Safrole	EPA 8270D	EPA 8270D	NA
C9-C18 Aliphatic Hydrocarbons	MAEPH	MAEPH	NA
C19-C36 Aliphatic Hydrocarbons	MAEPH	MAEPH	NA
C11-C22 Aromatic Hydrocarbons	MAEPH	MAEPH	NA
C5-C8 Aliphatic Hydrocarbons	MAVPH	MAVPH	NA
C9-C12 Aliphatic Hydrocarbons	MAVPH	MAVPH	NA
C9-C10 Aromatic Hydrocarbons	MAVPH	MAVPH	NA
Toxicity Characteristic Leaching Procedure (TCLP)	EPA 1311	EPA 1311	NA
Synthetic Precipitation Leaching Procedure (SPLP)	EPA 1312	EPA 1312	NA

Analytical method	Prep Method			
	Soil	Water	Air	Waste
EPA 8260B	EPA 5035	EPA 5030B	NA	EPA 5035
EPA 624	NA	EPA 5030B	NA	NA
EPA 625	NA	EPA 3510C	NA	NA
EPA 8270D	EPA 3545A	EPA 3510C	NA	EPA 3580A
EPA 200.7	NA	EPA 200.7	NA	NA
EPA 6010C	EPA 3050B	EPA 3005A	NA	EPA 3050B
EPA 608	NA	EPA 3510C	NA	NA
EPA 8081B	EPA 3545A	EPA 3510C	NA	EPA 3580A
EPA 8082A	EPA 3545A, EPA 3540C	EPA 3510C	NA	EPA 3580A
EPA 615	NA	EPA 615	NA	NA

Analytical method	Prep Method			
EPA 8151A	EPA 8151A	EPA 8151A	NA	EPA 8151A
MA VPH, May 2004 Revision 1.1	EPA 5035	EPA 5030B	NA	NA
MA EPH, May 2004 Revision 1.1	EPA 3545A	EPA 3510C	NA	NA
FLPRO	EPA 3545A	EPA 3510C	NA	NA
8015C – GRO	EPA 5035	EPA 5030B	NA	NA
8015C – DRO	EPA 3545A	EPA 3510C	NA	NA
TO14A	NA	NA	TO14A	NA
TO15	NA	NA	TO15	NA
SPLP	EPA 1312	EPA 1312	NA	EPA 1312
TCLP	EPA 1311	EPA 1311	NA	EPA 1311

The American Association for Laboratory Accreditation

World Class Accreditation

Accredited DoD ELAP Laboratory

A2LA has accredited

ENVIRONMENTAL CONSERVATION LABORATORIES - JACKSONVILLE

Jacksonville, FL

for technical competence in the field of

Environmental Testing

In recognition of the successful completion of the A2LA evaluation process that includes an assessment of the laboratory's compliance with ISO/IEC 17025:2005, the 2003 NELAC Chapter 5 Standard, and the requirements of the Department of Defense Environmental Laboratory Accreditation Program (DoD ELAP) as detailed in the DoD Quality Systems Manual for Environmental Laboratories (QSM v4.1); accreditation is granted to this laboratory to perform recognized EPA methods as defined on the associated A2LA Environmental Scope of Accreditation. This accreditation demonstrates technical competence for this defined scope and the operation of a laboratory quality management system (*refer to joint ISO-ILAC-IAF Communiqué dated 8 January 2009*).

AMERICAN ASSOCIATION FOR LABORATORY ACCREDITATION
CORPORATE SEAL 1978
DISTRICT OF COLUMBIA
A2LA

Presented this 1st day of May 2012.

President & CEO
For the Accreditation Council
Certificate Number 3000.02
Valid to April 30, 2014

For the tests or types of tests to which this accreditation applies, please refer to the laboratory's Environmental Scope of Accreditation.

SCOPE OF ACCREDITATION TO ISO/IEC 17025:2005

ENVIRONMENTAL CONSERVATION LABORATORIES – ORLANDO
10775 Central Port Drive
Orlando, FL 32824
Russell Macomber Phone: 407 826 5314
rmacomber@encolabs.com

ENVIRONMENTAL

Valid To: March 31, 2014 Certificate Number: 3000.01

In recognition of the successful completion of the A2LA evaluation process, (including an assessment of the laboratory's compliance with ISO IEC 17025:2005, the 2003 NELAC Chapter 5 Standard, and the requirements of the DoD Environmental Laboratory Accreditation Program (DoD ELAP) as detailed in version 4.2 of the DoD Quality Systems Manual for Environmental Laboratories) accreditation is granted to this laboratory to perform recognized EPA methods using the following testing technologies and in the analyte categories identified below:

Testing Technologies

Analyte / Parameter	Non-Potable Water	Solid Hazardous Waste
Metals	EPA 6020A/200.8	EPA 6020A
Aluminum	EPA 6020A/200.8	EPA 6020A
Antimony	EPA 6020A/200.8	EPA 6020A
Arsenic	EPA 6020A/200.8	EPA 6020A
Barium	EPA 6020A/200.8	EPA 6020A
Beryllium	EPA 6020A/200.8	EPA 6020A
Cadmium	EPA 6020A/200.8	EPA 6020A
Calcium	EPA 6020A/200.8	EPA 6020A
Chromium	EPA 6020A/200.8	EPA 6020A
Cobalt	EPA 6020A/200.8	EPA 6020A
Copper	EPA 6020A/200.8	EPA 6020A
Hardness	SM 2340 B	----------
Iron	EPA 6020A/200.8	EPA 6020A
Lead	EPA 6020A/200.8	EPA 6020A
Magnesium	EPA 6020A/200.8	EPA 6020A
Manganese	EPA 6020A/200.8	EPA 6020A
Mercury	EPA 245.1/7470A	EPA 7471B
Molybdenum	EPA 6020A/200.8	EPA 6020A
Nickel	EPA 6020A/200.8	EPA 6020A
Potassium	EPA 6020A/200.8	EPA 6020A
Selenium	EPA 6020A/200.8	EPA 6020A
Silver	EPA 6020A/200.8	EPA 6020A
Sodium	EPA 6020A/200.8	EPA 6020A
Thallium	EPA 6020A/200.8	EPA 6020A
Tin	EPA 6020A/200.8	EPA 6020A
Titanium	EPA 6020A/200.8	EPA 6020A
Vanadium	EPA 6020A/200.8	EPA 6020A

5301 Buckeystown Pike, Suite 350 | Frederick, Maryland 21704-8373 | Phone: 301 644 3248 | Fax: 301 662 2974 | www.A2LA.org

Analyte / Parameter	Non-Potable Water	Solid Hazardous Waste
Metals	EPA 6020A/200.8	EPA 6020A
Zinc	EPA 6020A/200.8	EPA 6020A
Microbiology		
Total Coliforms	SM 9222B	----------
Fecal Coliforms	SM 9222D	----------
General Chemistry		
Acidity, as $CaC0_3$	EPA 305.1/SM 2310 B (4A)	----------
Alkalinity as $CaC0_3$	EPA 310.1/SM 2320 B	EPA 310.1/SM 2320 B
Alkalinity as $CaC0_3$	EPA 310.2	EPA 310.2
Biochemical oxygen demand	EPA 405.1/SM 5210 B	----------
Bromide	EPA 300.0/9056A	EPA 9056A
Carbonaceous BOD (CBOD)	SM 5210 B	----------
Chemical oxygen demand	EPA 410.4	----------
Chloride	EPA 300.0/9056A	EPA 9056A
Chromium VI	EPA 7196/ SM 3500-Cr D	EPA 7196
Conductivity	EPA 120.1	----------
Cyanide	EPA 335.2/SM 4500-CN E	EPA 9014
Cyanide, Reactive	----------	SW-846 7.3.3
Ferric iron (calculated)	SM 3500-Fe D	----------
Ferrous iron	SM 3500-Fe D	----------
Fluoride	EPA 300.0/9056A	EPA 9056A
Hardness	EPA 130.2/SM 2340 C	----------
Kjeldahl nitrogen -total	EPA 351.2	EPA351.2
Nitrate as N	EPA 300.0/353.1/9056A	EPA 353.1/9056A
Nitrate-nitrite	EPA 300.0/353.1/9056A	EPA 353.1/9056A
Nitrite as N	EPA 300.0/354.1/9056A/SM 4500-NO_2 B	EPA 9056A/ SM 4500-NO_2 B
Organic nitrogen	EPA 351.2/350.1	EPA 351.2/350.1
Orthophosphate as P	EPA 365.1	----------
Orthophosphate as P	EPA 365.3	----------
pH	EPA 150.1/9040C/SM 4500-H^+-B	EPA 9045D
Phosphorus, total	EPA 365.4	EPA 365.4
Residue-filterable (TDS)	SM 2540 C	----------
Residue-nonfilterable (TSS)	SM 2540 D	----------
Residue-total	SM 2540 B/SM 2540 G/EPA 160.3	SM 2540G/EPA 160.3
Residue-volatile	EPA 160.4	EPA 160.4
Sulfate	EPA 300.0/9056A	EPA 9056A
Sulfide	EPA 376.1/SM 4500-S E	EPA 9030B/9034
Sulfide, Reactive	----------	SW-846 7.3.4
Surfactants -MBAS	SM 5540 C	----------
Total nitrate-nitrite	EPA 9056 A/SM 4500-$N0_3$ H	EPA 9056 A/SM 4500-$N0_3$ H
Total cyanide	EPA 9014	EPA 9014
Total nitrogen	TKN + Total nitrate-nitrite	TKN + Total nitrate-nitrite
Total Organic Carbon	EPA 9060A/SM 5310B	TOC Walkley Black
Total phenolics	EPA 420.1	EPA 420.1
Total, fixed, and volatile residue	SM 2540 G	SM 2540 G
Turbidity	EPA 180.1	----------
Un-ionized ammonia	DEP SOP 10/03/83	DEP SOP 10/03/83
Extractable Organics		
1,2,4-Trichlorobenzene	EPA 8270D/625	EPA 8270D

Analyte / Parameter	Non-Potable Water	Solid Hazardous Waste
Extractable Organics		
1,2,4,5-Tetrachlorobenzene	EPA 8270D/625	EPA 8270D
1,2-Dichlorobenzene	EPA 8270D/625	EPA 8270D
1,2-Diphenylhydrazine	EPA 8270D/625	EPA 8270D
1,3-Dichlorobenzene	EPA 8270D/625	EPA 8270D
1,4-Dichlorobenzene	EPA 8270D/625	EPA 8270D
1- Methylnaphthalene	EPA 8270D/625/ Scan-Sim	EPA 8270D/ Scan-Sim
2,3,4,6-Tetrachlorophenol	EPA 8270D/625	EPA 8270D
2,4,5-Trichlorophenol	EPA 8270D/625	EPA 8270D
2,4,6-Trichlorophenol	EPA 8270D/625	EPA 8270D
2,4-Dichlorophenol	EPA 8270D/625	EPA 8270D
2,4-Dimethylphenol	EPA 8270D/625	EPA 8270D
2,4-Dinitrophenol	EPA 8270D/625	EPA 8270D
2,4-Dinitrotoluene (2,4-DNT)	EPA 8270D/625/ Scan-Sim	EPA 8270D
2,6-Dichlorophenon	EPA 8270D/625	EPA 8270D
2,6-Dinitrotoluene (2,6-DNT)	EPA 8270D/625	EPA 8270D
2-Chloronaphthalene	EPA 8270D/625	EPA 8270D
2-Chlorophenol	EPA 8270D/625	EPA 8270D
2·Methyl-4,6-dinitrophenol	EPA 8270D/625	EPA 8270D
2-Methylnaphthalene	EPA 8270D/625 Scan-Sim	EPA 8270D Scan-Sim
2-Methylphenol (o-Cresol)	EPA 8270D/625	EPA 8270D
2-Nitroaniline	EPA 8270D/625	EPA 8270D
2-Nitrophenol	EPA 8270D/625	EPA 8270D
3,3'-Dichlorobenzidine	EPA 8270D/625	EPA 8270D
3/4-Methylphenols (m/p-Cresols)	EPA 8270D/625	EPA 8270D
3-Nitroaniline	EPA 8270D/625	EPA 8270D
4-Bromophenyl phenyl ether	EPA 8270D/625	EPA 8270D
4-Chloro-3-methylphenol	EPA 8270D/625	EPA 8270D
4-Chloroaniline	EPA 8270D/625	EPA 8270D
4-Chlorophenyl phenyl ether	EPA 8270D/625	EPA 8270D
4-Nitrophenol	EPA 8270D/625	EPA 8270D
Acenaphthene	EPA 8270D/625 Scan-Sim	EPA 8270D Scan-Sim
Acenaphthylene	EPA 8270D/625 Scan-Sim	EPA 8270D Scan-Sim
4-Melhylphenol (p-Cresol)	EPA 8270D/625	EPA 8270D
4-Nitroaniline	EPA 8270D/625	EPA 8270D
Acetophenone	EPA 8270D/625	EPA 8270D
Anthracene	EPA 8270D/625/ Scan-Sim	EPA 8270D
Atrazine	EPA 8270D/625	EPA 8270D
Benzaldehyde	EPA 8270D/625	EPA 8270D
Benzidine	EPA 8270D/625/ Scan-Sim	EPA 8270D
Benzo(a)anthracene	EPA 8270D/625/ Scan-Sim	EPA 8270D Scan-Sim
Benzo(a)pyrene	EPA 8270D/625/ Scan-Sim	EPA 8270D Scan-Sim
Benzo(b)fluoranthene	EPA 8270D/625/ Scan-Sim	EPA 8270D Scan-Sim
Benzo(g,h,i)perylene	EPA 8270D/625/ Scan-Sim	EPA 8270D Scan-Sim
Benzo(k)fluoranthene	EPA 8270D/625/ Scan-Sim	EPA 8270D Scan-Sim
Benzyl alcohol	EPA 8270D/625	EPA 8270D
1,1-Biphenyl	EPA 8270D/625	EPA 8270D
bis(2-Chloroethoxy) methane	EPA 8270D/625	EPA 8270D
bis(2-Chloroethyl) ether	EPA 8270D/625	EPA 8270D
bis(2-Chloroisopropyl) ether (2,2'-Oxybis(1-chloropropane))	EPA 8270D/625	EPA 8270D
bis(2-Ethylhexyl) phthalate (DEHP)	EPA 8270D/625	EPA 8270D

Analyte / Parameter	Non-Potable Water	Solid Hazardous Waste
Extractable Organics		
Butyl benzyl phthalate	EPA 8270D/625	EPA 8270D
Caprolactam	EPA 8270D/625	EPA 8270D
Carbazole	EPA 8270D/625	EPA 8270D
Chrysene	EPA 8270D/625/ Scan-Sim	EPA 8270D Scan-Sim
Dibenz(a,h)anthracene	EPA 8270D/625/ Scan-Sim	EPA 8270D Scan-Sim
Dibenzofuran	EPA 8270D/625	EPA 8270D
Diethyl phthalate	EPA 8270D/625	EPA 8270D
Dimethyl phthalate	EPA 8270D/625/ Scan-Sim	EPA 8270D
Di-n-butyl phthalate	EPA 8270D/625	EPA 8270D
Di-n-octyl phthalate	EPA 8270D/625	EPA 8270D
Fluoranthene	EPA 8270D/625/ Scan-Sim	EPA 8270D Scan-Sim
Fluorene	EPA 8270D/625 Scan-Sim	EPA 8270D Scan-Sim
Hexachlorobenzene	EPA 8270D/625/ Scan-Sim	EPA 8270D
Hexachlorobutadiene	EPA 8270D/625/ Scan-Sim	EPA 8270D
Hexachlorocyclopentadiene	EPA 8270D/625	EPA 8270D
Hexachloroethane	EPA 8270D/625	EPA 8270D
Indeno(1,2,3-cd)pyrene	EPA 8270D/625/ Scan-Sim	EPA 8270D Scan-Sim
Isodrin	EPA 8270D/625	EPA 8270D
Isophorone	EPA 8270D/625	EPA 8270D
Naphthalene	EPA 8270D/625 Scan-Sim	EPA 8270D Scan-Sim
Nitrobenzene	EPA 8270D/625	EPA 8270D
n-Nitrosodimethylamine	EPA 8270D/625	EPA 8270D
n-Nitrosodi-n-propylamine	EPA 8270D/625	EPA 8270D
n-Nitrosodiphenylamine	EPA 8270D/625	EPA 8270D
n-Nitrosopyrrolidine	EPA 8270D/625	EPA 8270D
Pentachlorophenol	EPA 8270D/625/ Scan-Sim	EPA 8270D
Phenanthrene	EPA 8270D/625 Scan-Sim	EPA 8270D Scan-Sim
Phenol	EPA 8270D/625	EPA 8270D
Pyrene	EPA 8270D/625 Scan-Sim	EPA 8270D Scan-Sim
Pyridine	EPA 8270D/625	EPA 8270D
Total Petroleum Hydrocarbons (TPH)	FL·PRO	FL·PRO
Volatile Organics		
1,1,1,2-Tetrachloroethane	EPA 8260B/624	EPA 8260B
1,1,1-Trichloroethane	EPA 8260B/624	EPA 8260B
1,1,2,2-Tetrachloroethane	EPA 8260B/624	EPA 8260B
1,1,2-Trichloro-1,2,2-trifluoroethane	EPA 8260B/624	EPA 8260B
1,1,2-Trichloroethane	EPA 8260B/624	EPA 8260B
1,1-Dichloroethane	EPA 8260B/624	EPA 8260B
1,1-Dichloroethene	EPA 8260B/624	EPA 8260B
1,1-Dichloropropene	EPA 8260B/624	EPA 8260B
1,2,3-Trichlorobenzene	8260B/624	EPA 8260B
1,2,3-Trichloropropane	EPA 8260B/624	EPA 8260B
1,2,4-Trichlorobenzene	EPA 8260B/624	EPA 8260B
1,2,4-Trimethylbenzene	EPA 8260B/624	EPA 8260B
1,2-Dibromo-3-chloropropane (DBCP)	EPA 504/8011/8260B	EPA 8260B
1,2-Dibromoethane (EDB, Ethylene dibromide)	EPA 504/8011/8260B	EPA 8260B
1,2-Dichlorobenzene	EPA 8260B/624	EPA 8260B
1,2-Dichloroethane	EPA 8260B/624	EPA 8260B

Analyte / Parameter	Non-Potable Water	Solid Hazardous Waste
Volatile Organics		
1,2-Dichloropropane	EPA 8260B/624	EPA 8260B
1,3,5-Trimethylbenzene	EPA 8260B/624	EPA 8260B
1,3-Dichlorobenzene	EPA 8260B/624	EPA 8260B
1,3-Dichloropropane	EPA 8260B/624	EPA 8260B
1,4-Dichlorobenzene	EPA 8260B/624	EPA 8260B
1,4-Dioxane (1,4-Diethylencoxide)	EPA 8260B/8260C SIM/624	EPA 8260B/8260C SIM
2,2-Dichloropropane	EPA 8260B/624	EPA 8260B
2-Butanone (Methyl ethyl ketone, MEK)	EPA 8260B/624	EPA 8260B
2-Chloroethyl vinyl ether	EPA 8260B/624	EPA 8260B
2-Chlorotoluene	EPA 8260B/624	EPA 8260B
2-Hexanone	EPA 8260B/624	EPA 8260B
4-Chlorotoluene	EPA 8260B/624	EPA 8260B
4-Methyl-2-pentanone (MIBK)	EPA 8260B/624	EPA 8260B
Acetone	EPA 8260B/624	EPA 8260B
Acetonitrile	EPA 8260B/624	EPA 8260B
Acrolein (Propenal)	EPA 8260B/624	EPA 8260B
Acrylonitrile	EPA 8260B/624	EPA 8260B
Allyl chloride (3-Chloropropene)	EPA 8260B/624	EPA 8260B
Benzene	EPA 8260B/624	EPA 8260B
Bromobenzene	EPA 8260B/624	EPA 8260B
Bromochloromethane	EPA 8260B/624	EPA 8260B
Bromodichloromethane	EPA 8260B/624	EPA 8260B
Bromoform	EPA 8260B/624	EPA 8260B
Carbon tetrachloride	EPA 8260B/624	EPA 8260B
Carbon disulfide	EPA 8260B/624	EPA 8260B
Chlorobenzene	EPA 8260B/624	EPA 8260B
Chloroethane	EPA 8260B/624	EPA 8260B
Chloroform	EPA 8260B/624	EPA 8260B
Chloroprene	EPA 8260B/624	EPA 8260B
cis-1,2-Dichloroethene	EPA 8260B/624	EPA 8260B
cis-1,3-Dichloropropene	EPA 8260B/624	EPA 8260B
Cyclohexane	EPA 8260B/624	EPA 8260B
Dibromochloromethane	EPA 8260B/624	EPA 8260B
Dibromomethane	EPA 8260B/624	EPA 8260B
Dichlorodifluoromethane	EPA 8260B/624	EPA 8260B
Ethyl methacrylate	EPA 8260B/624	EPA 8260B
Hexachlorobutadiene	EPA 8260B/624	EPA 8260B
Ethylbenzene	EPA 8260B/624	EPA 8260B
Iodomethane (Methyl iodide)	EPA 8260B/624	EPA 8260B
Isobutyl alcohol (2-Methyl-l-propanol)	EPA 8260B/624	EPA 8260B
Isopropylbenzene	EPA 8260B/624	EPA 8260B
m+p-Xylenes	EPA 8260B/624	EPA 8260B
Methacrylonitrile	EPA 8260B/624	EPA 8260B
Methyl acetate	EPA 8260B/624	EPA 8260B
Methyl bromide (Bromomethane)	EPA 8260B/624	EPA 8260B
Methyl chloride (Chloromethane)	EPA 8260B/624	EPA 8260B
Methyl methacrylate	EPA 8260B/624	EPA 8260B
Methyl tert-butyl ether (MTBE)	EPA 8260B/624	EPA 8260B
Methylcyclohexane	EPA 8260B/624	EPA 8260B

Analyte / Parameter	Non-Potable Water	Solid Hazardous Waste
Volatile Organics		
Methylene chloride	EPA 8260B/624	EPA 8260B
Naphthalene	EPA 8260B/624	EPA 8260B
n-Butylbenzene	EPA 8260B/624	EPA 8260B
n-Propylbenzene	EPA 8260B/624	EPA 8260B
o-Xylene	EPA 8260B/624	EPA 8260B
Pentachloroethane	EPA 8260B/624	EPA 8260B
p-Isopropyltoluene	EPA 8260B/624	EPA 8260B
Propionitrile (Ethyl cyanide)	EPA 8260B/624	EPA 8260B
sec-Butylbenzene	EPA 8260B/624	EPA 8260B
Styrene	EPA 8260B/624	EPA 8260B
tert-Butylbenzene	EPA 8260B/624	EPA 8260B
Tetrachloroethene (Perchloroethylene)	EPA 8260B/624	EPA 8260B
Toluene	EPA 8260B/624	EPA 8260B
trans-1,2-Dichloroethene	EPA 8260B/624	EPA 8260B
trans-1,3-Dichloropropene	EPA 8260B/624	EPA 8260B
trans-1,4-Dichloro-2-butene	EPA 8260B/624	EPA 8260B
Trichloroethene (Trichloroethylene)	EPA 8260B/624	EPA 8260B
Trichlorofluoromethane	EPA 8260B/624	EPA 8260B
Vinyl acetate	EPA 8260B/624	EPA 8260B
Vinyl chloride	EPA 8260B/624	EPA 8260B
Xylene (total)	EPA 8260B/624	EPA 8260B
Pesticides-Herbicides-PCBs		
2,4,5-T	EPA 8151A /615	EPA 8151A
2,4-D	EPA 8151A /615	EPA 8151A
2,4-DB	EPA 8151A /615	EPA 8151A
3,5-Dichlorobenzoic acid	EPA 8151A /615	EPA 8151A
4.4'-DDD	EPA 8081B/608	EPA 8081B
4.4'-DDE	EPA 8081B/608	EPA 8081B
4,4'·DDT	EPA 8081B/608	EPA 8081B
4-Nitrophenol	EPA 8151A/615	EPA 8151A
Acifluorfen	EPA 8151A/615	EPA 8151A
Aldrin	EPA 8081B/608	EPA 8081B
alpha-BHC (alpha-Hexachlorocyclohexane)	EPA 8081B/608	EPA 8081B
alpha-Chlordane	EPA 8081B/608	EPA 8081B
Aroclor-1016(PCB-1016)	EPA 8082A/608	EPA 8082A
Aroclor-1221 (PCB-1221)	EPA 8082A/608	EPA 8082A
Aroclor-1232 (PCB-1232)	EPA 8082A/608	EPA 8082A
Aroclor-1242 (PCB-1242)	EPA 8082A/608	EPA 8082A
Aroclor-1248 (PCB-1248)	EPA 8082A/608	EPA 8082A
Aroclor-1254 (PCB-1254)	EPA 8082A/608	EPA 8082A
Aroclor-1260 (PCB-1260)	EPA 8082A/608	EPA 8082A
Aroclor-1262 (PCB-1262)	EPA 8082A/608	EPA 8082A
Aroclor-1268 (PCB-1268)	EPA 8082A/608	EPA 8082A
Azinphos-methyl (Guthion)	EPA 8141B	EPA 8141B
Bentazon	EPA 8151A/615	EPA 8151A
beta-BHC (beta-Hexachlorocyclohexane)	EPA 8081B/608	EPA 8081B
Bolstar (Sulprofos)	EPA 8141B	EPA 8141B
Chloramben	EPA 8151A/615	EPA 8151A

Analyte / Parameter	Non-Potable Water	Solid Hazardous Waste
Pesticides-Herbicides-PCBs		
Chlordane (tech.)	EPA 8081B/608	EPA 8081B
Chlorpynfos	EPA 8141B	EPA 8141B
Coumaphos	EPA 8141B	EPA 8141B
Dacthal (DCPA)	EPA 8151A/615	EPA 8151A
Dalapon	EPA 8151A/615	EPA 8151A
delta-BHC	EPA 8081B/608	EPA 8081B
Demeton, Total	EPA 8141B	EPA 8141B
Diazinon	EPA 8141B	EPA 8141B
Dicamba	EPA 8151A/615	EPA 8151A
Dichlorofenthion	EPA 8141B	EPA 8141B
Dichloroprop (Dichlorprop)	EPA 8151A/615	EPA 8151A
Dlchlorovos (DDVP, Dichtorvos)	EPA 8141B	EPA 8141B
Dieldrin	EPA 8081B/608	EPA 8081B
Dimethoate	EPA 8141B	EPA 8141B
Dinoseb (2-sec-buty1-4 ,6-dinilrophenol, DNB P)	EPA 8151A/615	EPA 8151A
Disulfoton	EPA 8141B	EPA 8141B
Endosulfan I	EPA 8081B/608	EPA 8081B
Endosulfan II	EPA 8081B/608	EPA 8081B
Endosulfan sulfate	EPA 8081B/608	EPA 8081B
Endrin	EPA 8081B/608	EPA 8081B
Endrin aldehyde	EPA 8081B/608	EPA 8081B
Endrin ketone	EPA 8081B/608	EPA 8081B
EPN	EPA 8141B	EPA 8141B
Ethion	EPA 8141B	EPA 8141B
Ethoprop	EPA 8141B	EPA 8141B
fensulfothion	EPA 8141B	EPA 8141B
fenthion	EPA 8141B	EPA 8141B
gamma-BHC (Lindane, gamma-Hexachlorocyclohexane)	EPA 8081B/608	EPA 8081B
gamma-Chlordane	EPA 8081B/608	EPA 8081B
Heptachlor	EPA 8081B/608	EPA 8081B
Heptachlor epoxide	EPA 8081B/608	EPA 8081B
Isodrin	EPA 8081B/608	EPA 8081B
Malathion	EPA 8141B	EPA 8141B
MCPA	EPA 8151A/615	EPA 8151A
MCPP	EPA 8151A/615	EPA 8151A
Merphos	EPA 8141B	EPA 8141B
Methoxychlor	EPA 8081B/608	EPA 8081B
Methyl parathion (Parathion. methyl)	EPA 8141B	EPA 8141B
Mevinphos	EPA 8141B	EPA 8141B
Mirex	EPA 8081B/608	EPA 8081B
Monocrotophos	EPA 8141B	EPA 8141B
Naled	EPA 8141B	EPA 8141B
Parathion, ethyl	EPA 8141B	EPA 8141B
Pentachlorophenol	EPA 8151A/615	EPA 8151A
Phorate	EPA 8141B	EPA 8141B
Picloram	EPA 8151A/615	EPA 8151A
Ronnel	EPA 8141B	EPA 8141B
Silvex (2A.5-TP)	EPA 8151B/615	EPA 8151B
Stirofos	EPA 8141B	EPA 8141B

Analyte / Parameter	Non-Potable Water	Solid Hazardous Waste
Pesticides-Herbicides-PCBs		
Sulfotepp	EPA 8141B	EPA 8141B
Tetraethyl pyrophosphate (TEPP)	EPA 8141B	EPA 8141B
Tokuthion (Prothiophos)	EPA 8141B	EPA 8141B
Toxaphene (Chlorinated camphene)	EPA 8081B/608	EPA 8081B
Trichloronate	EPA 8141B	EPA 8141B

Preparation Methods

Fraction	Analytical Method	Preparation Method
Cyanide	EPA 9014 EPA 335.2 /SM 4500-CN E	EPA 9010C
TX	EPA 9056A	EPA 5050
Metal water prep	EPA 6020A/200.8	EPA 3005A
Metals soil prep	EPA 6020A	EPA 3050B
Metals TCLP prep	EPA 6020A/200.8	EPA 3010A
Extractable organics and Pesticides water prep	EPA 8270D/625/8081B/8082A/ 608/ 8141B	EPA 3510C
Extractable organics and Pesticides waste prep	EPA 8270D/625/8081B/8082A/ 608/ 8141B	EPA 3580A
Extractable organics and Pesticides soil prep	EPA 8270D/625/8081B/8082A/ 608/ 8141B	EPA 3550C
Organics water and mid-level soil prep	EPA 8260B/624	EPA 5030B
Organics low-level soil prep	EPA 8260B/624	EPA 5035
Soil/water leachate	Wets	ENCO WETS-88
SPLP	Wets, Organics, and Metals	EPA 1312
TCLP	Wets, Organics, and Metals	EPA 1311

The American Association for Laboratory Accreditation

World Class Accreditation

Accredited DoD ELAP Laboratory

A2LA has accredited

ENVIRONMENTAL CONSERVATION LABORATORIES - ORLANDO

Orlando, FL

for technical competence in the field of

Environmental Testing

In recognition of the successful completion of the A2LA evaluation process that includes an assessment of the laboratory's compliance with ISO/IEC 17025:2005, the 2003 NELAC Chapter 5 Standard, and the requirements of the Department of Defense Environmental Laboratory Accreditation Program (DoD ELAP) as detailed in version 4.2 of the DoD Quality System Manual for Environmental Laboratories (QSM); accreditation is granted to this laboratory to perform recognized EPA methods as defined on the associated A2LA Environmental Scope of Accreditation. This accreditation demonstrates technical competence for this defined scope and the operation of a laboratory quality management system (*refer to joint ISO-ILAC-IAF Communiqué dated 8 January 2009*).

AMERICAN ASSOCIATION FOR LABORATORY ACCREDITATION
CORPORATE SEAL 1978
DISTRICT OF COLUMBIA
A2LA

Presented this 29th day of May 2012.

President & CEO
For the Accreditation Council
Certificate Number 3000.01
Valid to March 31, 2014

For the tests or types of tests to which this accreditation applies, please refer to the laboratory's Environmental Scope of Accreditation.

Responses to Comments

UNITED STATES ENVIRONMENTAL PROTECTION AGENCY
REGION III
1650 Arch Street
Philadelphia, Pennsylvania 19103-2029

October 10, 2012

Mr. Scott Park
NAVFAC MIDLANT, Building N-26, Room 3208
Attention: Code OPHE3, Mr. Scott Park
9742 Maryland Avenue
Norfolk, VA 23511-3095

Subject: Draft Tier II Sampling and Analysis Plan, AOC 8 – Area South of Site 7 Remedial Investigation, Naval Weapons Station Yorktown Cheatham Annex, Williamsburg, Virginia, July 2012

Mr. Park:

Thank you for the opportunity to review the subject document. EPA would like to provide the following comments at this time.

1. Please make similar changes to the report regarding comparison of on-site concentrations to maximum background concentrations (when the 95th percent UTL is exceeded) as was agreed to for recent SAPs such as Site 4.

2. PAGE 22 - The third bullet should be clarified to indicate that *95th percent UCL* groundwater concentrations from wells located in the most contaminated portion of the groundwater plume will be used to estimate potential risks.

3. The laboratory performing the analyses should be required to report Tentatively Identified Compounds (TICs). TIC reporting will allow for a more complete and comprehensive characterization of contamination at AOC8.

4. The submitted laboratory accreditation expired on March 31, 2012.

5. Because the data collected from the proposed soil and groundwater samples will be used in the remedial investigation and the variability that can occur between samples of these media, limiting the analyses to PAHs, PCBs, and inorganics in soil and VOCs and metals in groundwater is not supported. The analyses of the proposed samples need to include the original list of contaminants used in the former SI process.

6. The text indicates there is "…a slope where debris outcrops…." The text and figures need to identify the location of this slope and the debris outcrop. This will assist in determining if surface sediment, subsurface sediment, pore water, and/or surface water samples from the York River are needed for this remedial investigation (RI). This will also assist in identifying this as a potential migration pathway (Section 2.2.5) or quantifying the assumption (Section 2.3.3) that there is no buried debris outside the berm. The location of the debris outcrops can also be used to ensure the previous and proposed sampling locations include this area as a potential source of contamination.

7. Section 2.2.6 on page 20 states that potential ecological receptors exposed to surface soil at AOC 8 include lower trophic level terrestrial receptors (plants and soil invertebrates). The section further states that due to the small area of the site that contains debris (source areas), exposures to upper trophic level receptors (such as birds and mammals) are not considered significant. This approach is not acceptable to BTAG. Section 2.2.1 on page 18 states that the site is 1.5 acres, which is within the home range for small mammals and some birds. Therefore, food chain risk should be evaluated for receptors with small home ranges (e.g., short-tailed shrew [*Blarina brevicauda*] shrew and American robin [*Turdus migratorius*]) to more fully assess this exposure pathway.

8. Section 2.3.1 on page 21 states that while AOC 8 is located adjacent to the York River, no surface water or sediment sampling is recommended because the location and the height of the berm prevents the transport of site-related contaminants into the York River. In addition, the only potential risk identified in the groundwater sample collected closest to the York River, during the Site Inspection, was arsenic, which may not be representative of current arsenic concentrations because the groundwater samples were not collected from permanent monitoring wells. Because permanent monitoring wells are proposed for this investigation, the decision on whether to collect surface water and sediment from the York River should be based on the results of samples from these wells. As part of the RI, the discharge areas for groundwater should be identified so any future sampling could be properly located.

9. In the Ecological Decision Logic portion of Section 2.3.2, bullet one, the phrase "…(HQ) exceeds 1…" needs to change to "…(HQ) equals or exceeds 1…." Also, the initial and final COPCs for plants and invertebrates need to be based on maximum concentrations, not mean values.

10. Section 2.3.2 on page 21 states that if analytes are undetected or if any detected analytes are below the Project Action Limits (PALs), then it will be assumed that the nature and concentrations of these constituents do not pose an unacceptable risk, and no further action will be necessary. If analytes are detected above the project-specific PALs then a quantitative human health and ecological risk assessment will be conducted. Section 2.3.4 on page 26 states that the PALs are residential soil levels for human health and ecological screening levels for plants and soil invertebrates. All detected chemicals must be evaluated in the ERA to assess impacts to ecological receptors. The comparison to PALs does not consider the potential for food chain risk.

11. Section 2.3.2 on page 23 states that mean groundwater concentrations will be compared with surface water screening values. For the initial evaluation, maximum concentrations must be compared with surface water screening values (representing future potential risk). The contaminant concentrations in the wells closest to the groundwater discharge point should also be evaluated to assess the potential for risk and the need to further evaluate the groundwater / surface water pathway.

12. The first bullet on page 23 indicates that if COPC concentrations exceed the background 95 percent UTL, further evaluation will be needed. In the screening level ecological risk assessment, comparing site data to the background 95 percent UCL is appropriate, not the UTL or maximum base background concentrations. (It warrants reiterating that in the risk assessment, the potential for risk cannot be eliminated due to background concentrations.)

13. Section 2.3.3 states that it is unlikely that buried debris exists below the groundwater table, which is estimated to be less than 30 feet bgs. Information should be provided to support this statement, otherwise it should be removed.

14. Section 2.3.3 on page 24 states that 10 surface soil samples (0 to 6 inches) will be collected from AOC 8 (Figure 7) and analyzed for polycyclic aromatic hydrocarbons, polychlorinated biphenyls (PCBs), and inorganic constituents to supplement the existing surface soil data. Subsurface soil samples will be collected in the same locations. Information should be provided to justify the locations of proposed soil samples (fill spatial data gaps, migration pathways). The information provided in Table 2-6 is not specific enough to determine why some samples are being collected. It is unclear why three soil samples will be collected north of the study area.

15. Section 2.3.3 on page 24 states that the analytical results collected as part of the 2008 Site Inspection indicated that there were no semi-volatile organic chemicals, pesticides, or PCBs detected in groundwater; therefore, no additional sampling is required for these contaminant groups. Because this data is nearly five years old, it is unclear that this conclusion is supported. In addition, this same section states that these results may not be representative of current groundwater concentrations because they were collected using direct push technology rather than permanent monitoring wells. For these reasons, groundwater should be analyzed for the full suite of contaminants.

16. On page 25 the text indicates that the partnering team established a surface and subsurface soil pesticide threshold (50 µg/kg) for routine basewide pesticide application. Information should be provided to support the selection of this as a threshold value. Currently, insufficient information is provided to support this value.
17. On page 26, the text indicates that no additional sampling to that proposed in this document is needed to adequately assess the potential risk to ecological receptors. Insufficient information is available to determine if sampling will be needed in the York

River. Furthermore, the results of this sampling may indicate the need for additional sampling.

18. On page 26, in Section 2.3.4, item 3 indicates that groundwater concentrations will be compared to marine surface water screening values and BTAG marine screening values. The text needs to clarify the salinity range in the York River to ensure the appropriate screening values are being used.

19. Page 26, Section 2.3.5: The text needs to clarify how the test pits will address the debris outcrops identified in Section 2.2.1.

20. Page 33, Section 2.5: The text states "…the Team discussed and agreed to the proposed sampling locations for AOC 8." As stated above, the text needs to provide the supporting rationale for the proposed sample locations shown on Figure 7.

21. Page 36, Section 3.1.2: Under Soil Sampling, the text indicates that one surface soil sample will be analyzed for hexavalent chromium and one additional soil sample will be analyzed for total and hexavalent chromium. Because of the variability of contaminant concentrations in soil, these single samples are not likely adequate. Additional information is needed to support this approach or the approach must be revised.

If you have any questions, please contact me at 215-814-3394.

Sincerely,

Susanne Haug, P.E.
NPL/BRAC Federal Facilities Branch

cc: Wade Smith, VDEQ

Response to Comments
Remedial Investigation
Sampling and Analysis Plan
AOC 8 – Area South of Site 7
Naval Weapons Station Yorktown Cheatham Annex
Williamsburg, VA
January 3, 2013

Comments received by email on October 10, 2012 from Susanne Haug, Environmental Protection Agency, Region 3.

EPA Comment #1: Please make similar changes to the report regarding comparison of on-site concentrations to maximum background concentrations (when the 95th percent UTL is exceeded) as was agreed to for recent SAPs such as Site 4.

Navy Response: As discussed with the team as part of resolving the comments on the CAX Site 4 UFP-SAP, the intention of the Decision Tree (Figure 6) presented in the UFP-SAP is that comparison of COPC/COC concentrations to background 95% UTL data (or any other background-related criteria) will be conducted independently of the evaluation of potential risk through the completion of the human health and ecological risk assessments. Only in cases where potential human health or ecological risk is identified *and* comparison of site data to the background 95% UTLs indicates UTL exceedances, would further evaluation of the data with respect to consistency with background conditions be considered. In other words, should further evaluation methods (such as evaluating the magnitude of the 95% UTL exceedance and/or comparing to maximum background concentrations) be employed, they would only be utilized following the completion of the risk assessments. Therefore, the final step in the decision logic (Section 2.3.2, last bullet under "Human Health Decision Logic" and "Ecological Decision Logic") was revised to state:

- If the COC concentrations exceed the background 95 percent UTLs, further evaluation will be conducted to consider whether the COC concentrations are consistent with background conditions or if they represent a release such that further action is warranted.

And the 2nd to last box in the decision logic (Figure 6) was revised to state:

> Conduct further evaluation to consider whether the COC concentrations are consistent with background conditions or if they represent a release such that further action is warranted.

In addition, the text label for the arrow from this box directed to the left will be revised to read "COC concentrations not indicative of a CERCLA-related release" and the arrow directed to the right to read "COC concentrations indicative of a CERCLA-related release."

EPA Comment #2: PAGE 22 - The third bullet should be clarified to indicate that 95th percent UCL groundwater concentrations from wells located in the most contaminated portion of the groundwater plume will be used to estimate potential risks.

Navy Response: The third bullet was revised as follows:

> If COPCs are identified, human health risks will be evaluated for exposure to the COPCs indentified in groundwater for future industrial workers, residents, and construction workers. The 95% UCL of the mean groundwater concentration from the wells located in the most contaminated portion of the groundwater plume (if a plume is identified) will be used as the exposure concentration for the risk calculations. If all risks are within acceptable USEPA risk levels, no further action or assessment based on human health will be required for groundwater.

EPA Comment #3: The laboratory performing the analyses should be required to report Tentatively Identified Compounds (TICs). TIC reporting will allow for a more complete and comprehensive characterization of contamination at AOC 8.

Navy Response: The purpose of the RI is to collect additional data to supplement the current SI dataset in order to adequately characterize AOC 8 and evaluate potential risks to human health and the environment. As such, the investigation is not a release assessment. Therefore, the analytical suite will consist of constituents already established to be present at the site and TIC analysis is not appropriate.

EPA Comment #4: The submitted laboratory accreditation expired on March 31, 2012.

Navy Response: Tables A2-a through A2-c and Appendix D of the UFP-SAP were revised to include the updated laboratory accreditation references and documentation; the laboratory's accreditation is good through 2014.

EPA Comment #5: Because the data collected from the proposed soil and groundwater samples will be used in the remedial investigation and the variability that can occur between samples of these media, limiting the analyses to PAHs, PCBs, and inorganics in soil and VOCs and metals in groundwater is not supported. The analyses of the proposed samples need to include the original list of contaminants used in the former SI process.

Navy Response: During the 2008 Site Inspection (SI), soil and groundwater samples were analyzed for full suite (VOCs, SVOCs, pesticides, PCBs, explosives, and metals). The analytical results (included herein as Attachment 1) identified detections of 1 VOC, PAHs, pesticides, one PCB, and metals in surface soil, 2 VOCs, pesticides, one PCB, and metals in subsurface soil, and one VOC and metals in groundwater. Following a comparison to conservative screening values (Ecological Screening Values [ESVs] and USEPA Regional Screening Levels [RSLs] for residential soil, the Final SI Report (CH2M HILL, 2012) concluded that one PAH, one pesticide, one PCB, and 4 metals in surface soil; one pesticide, one PCB, and one metal in subsurface soil; and 1 VOC and 3 total and 5 dissolved metals in groundwater were detected at concentrations above the conservative screening values. Of these constituents that exceeded the conservative screening values, 1 PAH, 1 PCB, and 2 metals in surface soil and 1 VOC and 1 metal in groundwater were identified as COPCs (i.e., potential risk may exist due to exposure to these constituents).

As stated in *Guidance for Conducting Remedial Investigations and Feasibility Studies Under CERCLA* (USEPA, 1988), Section 2.2.2,

> "Before the activities necessary to conduct an RI/FS can be planned, it is important to compile the available data that have previously been collected for a site. These data can be used to determine the additional work that needs to be conducted both in the field and within the community. A thorough search of existing data should help avoid duplication of previous efforts and lead to a remedial investigation that is more focused and, therefore, more efficient in its expenditure of resources."

Following this guidance, since the SI sampling provided adequate spatial coverage to assess what COPCs exist, the RI will include analysis of a focused list of analytes based on the SI exceedances. It is the principal objective of the RI to refine the delineation, not continue determining what COPCs are present, since they were identified during the 2008 SI. Upon evaluation of the 2008 SI analytical results, the CAX Partnering Team agreed during the two scoping sessions (documented in Sections 2.1.1 and 2.1.2 of the UFP-SAP) to analyze the RI surface and subsurface soil samples for PAHs, PCBs and metals, and groundwater for VOCs and metals in order to fulfill this purpose. No changes were made to the UFP-SAP.

EPA Comment #6: The text indicates there is "…a slope where debris outcrops…." The text and figures need to identify the location of this slope and the debris outcrop. This will assist in determining if surface sediment, subsurface sediment, pore water, and/or surface water samples from the York River are needed for this remedial investigation (RI). This will also assist in identifying this as a potential migration pathway (Section 2.2.5) or quantifying the assumption (Section 2.3.3) that there is no buried debris outside the berm. The location of the debris outcrops can also be used to ensure the previous and proposed sampling locations include this area as a potential source of contamination.

Navy Response: The debris "outcrop" is better described as visible debris within the side of the berm, rather than an outcrop or large cut in the side of the berm where debris is exposed. This debris is located within the bermed area of the northern disposal area and no debris outcrops outside of the AOC 8 study area, which is defined by the site berm (see attached Figure 1). As such, any potential migration of contamination from surface water runoff in this area will be directed back to the site and ultimately infiltrate into the ground or evaporate within the site boundary. As a result, the presence of this area of visible debris within the berm provides no basis for the collection of surface sediment, subsurface sediment, pore water, and/or surface water samples from the York River to complete this RI.

The figures presented in the UFP-SAP have been revised to include the approximate location of the debris within the berm and the UFP-SAP text has been revised to state "….. a slope where debris ~~outcrops~~ is visible within the side of the berm …..". In addition, based on the location of this debris, and the locations of the test pits excavated during the 2008 SI, the 2008 SI soil sample locations (as depicted on Figure 4 of the UFP-SAP) have adequately characterized this area as a potential source of contamination.

EPA Comment #7: Section 2.2.6 on page 20 states that potential ecological receptors exposed to surface soil at AOC 8 include lower trophic level terrestrial receptors (plants and soil invertebrates). The section further states that due to the small area of the site that contains debris (source areas), exposures to upper trophic level receptors (such as birds and mammals) are not considered significant. This approach is not acceptable to BTAG. Section 2.2.1 on page 18 states that the site is 1.5 acres, which is within the home range for small mammals and some birds. Therefore, food chain risk should be evaluated for receptors with small home ranges (e.g., short-tailed shrew [Blarina brevicauda] shrew and American robin [Turdus migratorius]) to more fully assess this exposure pathway.

Navy Response: While the total site size may be 1.5 acres, only about 0.25 acres of the site has surface debris (Figure 2); this area expands to about 0.7 acres if buried debris is also considered (Figure 5). As outlined in the 2008 SI (CH2M HILL, 2012), these areas are too small for significant exposures to occur for upper-trophic-level populations, the focus of assessment endpoints. The UFP-SAP was revised as follows to clarify the size of the source area at AOC 8:

> Due to the small size of areas on the site that contain debris (the source areas, comprised of about 0.7 acres of the 1.5 acre site), exposures to upper trophic level receptors (such as birds and mammals) are not considered significant.

EPA Comment #8: Section 2.3.1 on page 21 states that while AOC 8 is located adjacent to the York River, no surface water or sediment sampling is recommended because the location and the height of the berm prevents the transport of site-related contaminants into the York River. In addition, the only potential risk identified in the groundwater sample collected closest to the York River, during the Site Inspection, was arsenic, which may not be representative of current arsenic concentrations because the groundwater samples were not collected from permanent monitoring wells. Because permanent monitoring wells are proposed for this investigation, the decision on whether to collect surface water and sediment from the York River should be based on the results of samples from these wells. As part of the RI, the discharge areas for groundwater should be identified so any future sampling could be properly located.

Navy Response: The decision on whether to collect additional RI data (including surface water and sediment from the York River or groundwater discharge data) will be based on an evaluation of the existing and proposed data (as outlined in the UFP-SAP). If this evaluation indicates additional RI data are needed to adequately fulfill the objectives of the RI, an addendum to this UFP-SAP will be prepared and submitted for Partnering Team review, prior to the completion of the RI Report. Section 2.3.1 (Project Statement and Objectives) was revised as follows:

> The objective of the RI is to collect additional data to supplement the current SI dataset to fill spatial data gaps and identify migration pathways in order to adequately characterize AOC 8 and evaluate potential risks to human health and ecological receptors. Field activities will include delineating the lateral extent of the two burial areas, collecting additional soil samples, and collecting groundwater samples from

permanent monitoring wells to adequately characterize the site. All test pit and soil data evaluated in the SI (CH2M HILL, 2012) and all data collected as part of this RI will be used to support an HHRA and ERA. While AOC 8 is located adjacent to the York River, no surface water or sediment sampling is recommended at this time because the location and the height of the berm along the eastern boundary (**Figure 3**) prevents the transport of site-related contaminants into the York River from surface runoff. In addition, the only potential risk identified in the groundwater sample collected closest to the York River, during the SI, was due to arsenic concentrations; however, these results may not be representative of current arsenic concentrations because the groundwater samples were not collected from permanent monitoring wells. If, following the evaluation of the RI data, it is determined additional RI data (i.e., surface water and sediment samples from the York River or groundwater discharge data) are needed to adequately fulfill the objectives of the RI, an addendum to this UFP-SAP will be prepared and submitted for Partnering Team review, prior to the completion of the RI Report.

EPA Comment #9: In the Ecological Decision Logic portion of Section 2.3.2, bullet one, the phrase "…(HQ) exceeds 1…" needs to change to "…(HQ) equals or exceeds 1…." Also, the initial and final COPCs for plants and invertebrates need to be based on maximum concentrations, not mean values.

Navy Response: The requested change relating to HQs was made to the SAP. Initial COPCs (Step 2) for plants and invertebrates will be based upon maximum concentrations. Final COPCs (Step 3A) will consider mean and 95% UCL soil concentrations, per Navy ERA guidance.

EPA Comment #10: Section 2.3.2 on page 21 states that if analytes are undetected or if any detected analytes are below the Project Action Limits (PALs), then it will be assumed that the nature and concentrations of these constituents do not pose an unacceptable risk, and no further action will be necessary. If analytes are detected above the project-specific PALs then a quantitative human health and ecological risk assessment will be conducted. Section 2.3.4 on page 26 states that the PALs are residential soil levels for human health and ecological screening levels for plants and soil invertebrates. All detected chemicals must be evaluated in the ERA to assess impacts to ecological receptors. The comparison to PALs does not consider the potential for food chain risk.

Navy Response: All detected chemicals in ecologically relevant media (e.g., surface soil) will be evaluated in the ERA. Regarding the potential for food chain risk, please see the response to Comment 7.

EPA Comment #11: Section 2.3.2 on page 23 states that mean groundwater concentrations will be compared with surface water screening values. For the initial evaluation, maximum concentrations must be compared with surface water screening values (representing future potential risk). The contaminant concentrations in the wells closest to the groundwater discharge point should also be evaluated to assess the potential for risk and the need to further evaluate the groundwater / surface water pathway.

Navy Response: For the initial evaluation (Step 2), maximum groundwater concentrations will be used. Subsequent evaluations (Step 3A), if necessary, may consider subsets of the available data, as suggested in the comment, and central tendency estimates of concentrations.

EPA Comment #12: The first bullet on page 23 indicates that if COPC concentrations exceed the background 95 percent UTL, further evaluation will be needed. In the screening level ecological risk assessment, comparing site data to the background 95 percent UCL is appropriate, not the UTL or maximum base background concentrations. (It warrants reiterating that in the risk assessment, the potential for risk cannot be eliminated due to background concentrations.)

Navy Response: Background concentrations, as agreed to by the Partnering Team during the background study, are 95% UTL values, which will be used in the assessment. These comparisons will be conducted as part of Step 3A, if necessary, per Navy ERA guidance.

EPA Comment #13: Section 2.3.3 states that it is unlikely that buried debris exists below the groundwater table, which is estimated to be less than 30 feet bgs. Information should be provided to support this statement, otherwise it should be removed.

Navy Response: The statement that it is unlikely that buried debris exists below the groundwater table was based on typical excavation and disposal practices in sandy soils. While it is unlikely that native material from the Site was excavated below groundwater for disposal purposes, this text was deleted from the UFP-SAP. In addition, depth to groundwater data will be collected from the monitoring wells installed as part of the RI. While it is not irrefutable, the depth to groundwater data can infer the likely maximum depth of debris at the site.

EPA Comment #14: Section 2.3.3 on page 24 states that 10 surface soil samples (0 to 6 inches) will be collected from AOC 8 (Figure 7) and analyzed for polycyclic aromatic hydrocarbons, polychlorinated biphenyls (PCBs), and inorganic constituents to supplement the existing surface soil data. Subsurface soil samples will be collected in the same locations. Information should be provided to justify the locations of proposed soil samples (fill spatial data gaps, migration pathways). The information provided in Table 2-6 is not specific enough to determine why some samples are being collected. It is unclear why three soil samples will be collected north of the study area.

Navy Response: The proposed soil sample locations were selected by the CAX Partnering Team to supplement the current SI dataset to fill spatial data gaps and identify migration pathways in order to adequately characterize AOC 8 and evaluate potential risks to human health and ecological receptors (changes to the UFP-SAP made as shown in the response to EPA Comment #8 above). The three samples north of the study area were proposed to confirm that no soil contamination exists outside of the bermed area adjacent to where buried debris, within the berm is the most extensive. Table 2-6 was revised as follows:

TABLE 2-6

AOC 8 Proposed Sampling Scheme and Associated Rationale

Media	Sample Count		Analysis	Rationale
Surface Soil	11	3	PAHs, PCBs, inorganic constituents, TOC, pH, grain size	Collected to determine if site related contaminants exist outside current site study area. The data will also be used to determine the nature and extent of contamination and support an HHRA and ERA.
		3	PAHs, PCBs, inorganic constituents, TOC, pH, grain size	Collected to determine the nature and extent of contamination within the vicinity of the burial area south of the site entrance road (no samples were previously collected from this area; therefore there is a spatial data gap in this area). The data will also be used to determine the nature and extent of contamination and support an HHRA and ERA.
		2	PAHs, PCBs, inorganic constituents, TOC, pH, grain size	Collected to determine if site related contaminants exist outside the buried debris area at the end of the site entrance road (no samples were previously collected from this area; therefore there is a spatial data gap in this area). The data will also be used to determine the nature and extent of contamination and support an HHRA and ERA.
		1	PAHs, PCBs, inorganic constituents, TOC, pH, grain size	Collected to determine if site related contaminants are migrating from the area immediately downgradient of the soil sample location where benzo(b)fluoranthene, Endrin aldehyde, and arsenic concentrations were detected in surface soil, above residential RSL or ecological screening values during the 2008 SI. The data will also be used to determine the nature and extent of contamination and support an HHRA and ERA.
		1	PAHs, PCBs, inorganic constituents, hexavalent chromium, TOC, pH, grain size	Collected to determine if site related contaminants are migrating from the area immediately downgradient of the 2008 test pit location, where the most extensive buried debris was identified. The data will also be used to determine the nature and extent of contamination and support an HHRA and ERA. Hexavalent chromium data will be used to determine the valency of high chromium concentrations detected during the 2008 SI in order to refine the HHRA.
		1	Total and hexavalent chromium	Collected to determine the valency of high chromium concentrations detected during the 2008 SI in order to refine the HHRA.
Subsurface Soil	10	3	PAHs, PCBs, inorganic constituents, pH	Collected to determine if site related contaminants exist outside current site study area. The data will also be used to determine the nature and extent of contamination and support an HHRA and ERA.
		3	PAHs, PCBs, inorganic constituents, pH	Collected to determine the nature and extent of contamination within the vicinity of the burial area south of the site entrance road (no samples were previously collected from this area; therefore there is a spatial data gap in this area). The data will also be used to determine the nature and extent of contamination and support an HHRA and ERA.

TABLE 2-6

AOC 8 Proposed Sampling Scheme and Associated Rationale

		2	PAHs, PCBs, inorganic constituents, pH	Collected to determine if site related contaminants exist outside the buried debris area at the end of the site entrance road (no samples were previously collected from this area; therefore there is a spatial data gap in this area). The data will also be used to determine the nature and extent of contamination and support an HHRA and ERA.
		1	PAHs, PCBs, inorganic constituents, pH	Collected to determine if site related contaminants are migrating from the area immediately downgradient of the soil sample location where benzo(b)fluoranthene, Endrin aldehyde, and arsenic concentrations were detected in surface soil, above residential RSL or ecological screening values during the 2008 SI. The data will also be used to determine the nature and extent of contamination and support an HHRA and ERA.
		1	PAHs, PCBs, inorganic constituents, pH	Collected to determine if site related contaminants are migrating from the area immediately downgradient of the 2008 test pit location, where the most extensive buried debris was identified. The data will also be used to determine the nature and extent of contamination and support an HHRA and ERA.
Groundwater	6	2	VOCs, total and dissolved inorganic constituents, nitrate, nitrite, sulfate, sulfide, alkalinity, methane, ethane, and ethane	Collected to determine if groundwater contaminant concentrations exist outside the debris disposal areas (no groundwater samples were previously collected from outside the buried debris; therefore there is a spatial data gap in this area).The data will also be used to assist in determining the degradation and mobility of VOCs and metals and support an HHRA and ERA.
		1	VOCs, total and dissolved inorganic constituents, nitrate, nitrite, sulfate, sulfide, alkalinity, methane, ethane, and ethane	Collected to determine if groundwater contaminant concentrations exist in the vicinity of the 2008 test pit location, where the most extensive buried debris was identified. The data will also be used to assist in determining the degradation and mobility of VOCs and metals and support an HHRA and ERA.
		1	VOCs, total and dissolved inorganic constituents, nitrate, nitrite, sulfate, sulfide, alkalinity, methane, ethane, and ethane	Collected to confirm groundwater contaminant concentrations detected during the 2008 SI (in the immediate vicinity of the 2008 SI groundwater sample where low level PCE concentrations were detected). The data will also be used to assist in determining the degradation and mobility of VOCs and metals and support an HHRA and ERA.
		2	VOCs, total and dissolved inorganic constituents, nitrate, nitrite, sulfate, sulfide, alkalinity, methane, ethane, and ethane	Collected to determine if groundwater contaminant concentrations are migrating into the York River at concentrations that may pose risk to human health or the environment. The data will also be used to assist in determining the degradation and mobility of VOCs and metals and support an HHRA and ERA.

EPA Comment #15: Section 2.3.3 on page 24 states that the analytical results collected as part of the 2008 Site Inspection indicated that there were no semi-volatile organic chemicals, pesticides, or PCBs detected in groundwater; therefore, no additional sampling is required for these contaminant groups. Because this data is nearly five years old, it is unclear that this conclusion is supported. In addition, this same section states that these results may not be representative of current groundwater concentrations because they were collected using direct push technology rather than permanent monitoring wells. For these reasons, groundwater should be analyzed for the full suite of contaminants.

Navy Response: Given the type of debris and the estimated date of disposal (sometime between 1942 and 1955, based on historical aerial photographs and the nature of the debris found during test pitting activities), the groundwater sample results indicate that site-related contaminants have not leached into the groundwater, despite the likely more than five decade time frame since disposal activities ceased and the relatively short distance beneath the waste material and the water table. Therefore, since the results of 2008 SI groundwater sampling show no SVOC, pesticide, PCB, or explosives detections in groundwater (see Attachment 1), no further investigation or evaluation is warranted for these constituents.

The UFP-SAP does state that the VOC and inorganic constituent results may not be representative of current groundwater *concentrations* because they were collected using DPT rather than permanent monitoring wells. However, this statement was intended to provide a rationale as to why the 2008 SI VOC and inorganic constituent data should not be further evaluated in the RI, not to indicate that all of the 2008 SI groundwater data are not representative of current groundwater conditions. The statement is based on the well-known potential for DPT groundwater sampling techniques to impact specifically VOC and inorganic constituent *concentrations* (e.g., the

effects of increased sample turbidity and aquifer disturbance with DPT), and does not provide a rationale for including SVOCs, pesticides, or PCBs as analytes in RI groundwater samples. All references to the VOC and inorganic constituents not being representative of groundwater conditions were revised to include this rationale:

> Although groundwater samples were analyzed for VOCs and inorganic constituents during the SI, these results will not be used in the RI because the groundwater samples were not collected from permanent monitoring wells and may not be representative of current VOC and inorganic concentrations in groundwater (due to the effects of increased sample turbidity and aquifer disturbance with DPT).

EPA Comment #16: On page 25 the text indicates that the partnering team established a surface and subsurface soil pesticide threshold (50 µg/kg) for routine basewide pesticide application. Information should be provided to support the selection of this as a threshold value. Currently, insufficient information is provided to support this value.

Navy Response: The selection of the 50 µg/kg value as the pesticide threshold for routine basewide pesticide application was established and agreed upon by the CAX Partnering Team during the November 2011 Partnering Meeting, as a result of the EPA RPM's discussions with BTAG. Originally, the CAX Partnering Team discussed using a higher threshold level (1 ppm); however, BTAG did not agree with this value and said background from routine spraying tends to be less than 50 µg/kg. As a result, the CAX Partnering team chose 50 µg/kg as the threshold value. No changes were made to the UFP-SAP.

EPA Comment #17: On page 26, the text indicates that no additional sampling to that proposed in this document is needed to adequately assess the potential risk to ecological receptors. Insufficient information is available to determine if sampling will be needed in the York River. Furthermore, the results of this sampling may indicate the need for additional sampling.

Navy Response: Please see the response to EPA Comment #8.

EPA Comment #18: On page 26, in Section 2.3.4, item 3 indicates that groundwater concentrations will be compared to marine surface water screening values and BTAG marine screening values. The text needs to clarify the salinity range in the York River to ensure the appropriate screening values are being used.

Navy Response: The range of salinity in the York River in the Yorktown/CAX area (as measured at Gloucester Point [VIMS, 2012]) is between 16 and 24 ppt, which is in the marine range (>10 ppt). The groundwater PAL text was revised as follows:

> 3. Groundwater: USEPA Adjusted tap water RSLs and federal MCLs for human health and literature-based marine surface water screening values and BTAG marine screening values to conservatively evaluate potential risks to ecological receptors from groundwater discharge to surface water. Marine screening values will be used because the salinity of the York River in the vicinity of CAX (as measured at Gloucester Point [VIMS, 2012]) is between 16 and 24 ppt, which is in the marine range (>10 ppt).

EPA Comment #19: Page 26, Section 2.3.5: The text needs to clarify how the test pits will address the debris outcrops identified in Section 2.2.1.

Navy Response: As discussed in the response to Comment #6, there is debris visible within the bermed area along the northern portion of the site; however, the debris is contained within the berm and confined to the site. As a result, the test pitting activities conducted during the 2008 SI have sufficiently delineated the debris in this area. No changes were made to the SAP.

EPA Comment #20: Page 33, Section 2.5: The text states "…the Team discussed and agreed to the proposed sampling locations for AOC 8." As stated above, the text needs to provide the supporting rationale for the proposed sample locations shown on Figure 7.

Navy Response: Please see the response to EPA Comment #14.

EPA Comment #21: Page 36, Section 3.1.2: Under Soil Sampling, the text indicates that one surface soil sample will be analyzed for hexavalent chromium and one additional soil sample will be analyzed for total and hexavalent chromium. Because of the variability of contaminant concentrations in soil, these single samples are not likely adequate. Additional information is needed to support this approach or the approach must be revised.

Navy Response: The EPA and VDEQ (including their associated technical support) discussed and agreed to this approach (collecting two samples for chromium speciation comparison) for other investigations currently being conducted at CAX. Chromium is generally found in natural soil in the trivalent form, unless activities at the site have resulted in the release or formation of hexavalent chromium. There is no known source of hexavalent chromium at AOC 8, as evident by the fact that total chromium concentrations in subsurface soil do not exceed the base background 95% UTL; therefore, trivalent chromium is the form of chromium expected to be present at the site. In addition, the chromium concentrations that exceeded the base background 95% UTL in surface soil are only slightly above the base background 95% UTL and are likely attributable to background conditions. As outlined in the January 2012 Scoping Session section of this UFP-SAP (Section 2.1.2), the CAX Partnering Team agreed that since the hexavalent chromium samples will be collected from those areas where chromium concentrations were the greatest during the 2008 SI, two samples for chromium speciation are sufficient for chromium speciation and to refine the human health risk assessment.

It should be noted that the two surface soil samples from AOC 8 that will be collected for hexavalent chromium analysis will be collected near SI locations SO04 and SO06. The sample to be collected near SI location SO04 is already being analyzed for inorganic constituents, so an additional total chromium analysis is not needed since chromium is already included in the total inorganic constituent list. The sample by SO06 was added to provide a second chromium speciation sample, and it will be also be analyzed for total chromium for comparison purposes. Therefore, two surface soil samples will include both total and hexavalent chromium analyses.

DVR \\MNUSTRICTGFS01\PROJECTS\USNAVFACENGCOM405450\CHEATHAMANNEX\MAPFILES\388429_AOC8_UFPSAP\FIGURE 1 - PROPOSED SAMPLE LOCATIONS.MXD BHATHAWAY 1/3/2013 10:27:17 AM

Legend

- Proposed Surface Soil Samples (for Hexavalent Chromium Analysis)
- Proposed Surface/Subsurface Soil Samples
- Proposed Surface/Subsurface Soil Samples Co-Located with Groundwater Samples
- Soil Sample Location (2008 SI)
- Groundwater/Soil Sample Location (2008 SI)
- Approximate AOC 8 Study Area
- Observed Surficial Debris
- Approximate Location of Visible Debris within the Side Berm
- Approximate Location of Berm

N
W E
S

0 35 70
Feet

Figure 1
Proposed Sample Locations
AOC 8 Remedial Investigation UFP-SAP
Cheatham Annex
Williamsburg, Virginia

CH2MHILL

Attachment 1

TABLE 7-1
AOC 8 Surface Soil Detection and Exceedance Results
Site Inspection Report: Areas of Concern 1, 2, 6, 7 and 8
Cheatham Annex
Williamsburg, Virginia

Station ID	**CLEAN CAX BKG SS**	**Eco Surface Soil Screening Value**	**CLEAN RSLs Industrial Soil Adjusted (Nov. 2010)**	**CLEAN RSLs Residential Soil Adjusted (Nov. 2010)**	CAA08-SO01	CAA08-SO02	CAA08-SO03	CAA08-SO04	CAA08-SO05
Sample ID					CAA08-SS01-1008	CAA08-SS02-1008	CAA08-SS03-1008	CAA08-SS04-1008	CAA08-SS05-1008
Sample Date					10/22/08	10/22/08	10/22/08	10/24/08	10/24/08
Sample Depth					0-6"	0-6"	0-6"	0-6"	0-6"
Chemical Name									
Volatile Organic Compounds (UG/KG)									
Acetone	--	--	63,000,000	6,100,000	3 B	**36 J**	11 U	11 U	10 U
Semivolatile Organic Compounds (UG/KG)									
Benzaldehyde	--	--	1,200,000	780,000	360 U	370 U	370 U	**180 J**	360 U
Benzo(b)fluoranthene	--	HMW PAH	2,100	150	360 U	370 U	370 U	**290 J**	360 U
Benzo(k)fluoranthene	--	HMW PAH	21,000	1,500	360 U	370 U	370 U	**210 J**	360 U
Chrysene	--	HMW PAH	210,000	15,000	360 U	370 U	370 U	**210 J**	360 U
Fluoranthene	--	LMW PAH	2,200,000	230,000	360 U	370 U	370 U	**260 J**	360 U
PAH (HMW)	--	18,000	--	--	1,620 U	1,665 U	1,665 U	**1,860**	1,620 U
PAH (LMW)	--	29,000	--	--	1,620 U	1,665 U	1,665 U	**1,700**	1,620 U
Pyrene	--	HMW PAH	1,700,000	170,000	360 U	370 U	370 U	**250 J**	360 U
Pesticide/Polychlorinated Biphenyls (UG/KG)									
4,4'-DDD	--	583	7,200	2,000	3.6 U	3.6 U	**0.23 J**	**2.4 J**	**0.37 J**
4,4'-DDE	--	114	5,100	1,400	3.6 U	3.6 U	**0.34 J**	**4.8 J**	**17**
4,4'-DDT	--	100	7,000	1,700	**0.44 J**	3.6 U	**1.2 J**	7.3 U	**14**
Aroclor-1260	--	8,000	740	220	36 U	36 U	38 U	**420**	36 U
Dieldrin	--	10.5	110	30	**0.29 J**	3.6 U	**0.34 J**	7.3 U	3.6 U
Endrin aldehyde	--	1.95	18,000	1,800	3.6 U	3.6 U	**0.43 J**	**21 J**	3.6 U
gamma-Chlordane	--	52.9	6,500	1,600	1.8 U	1.8 U	1.9 U	**0.81 J**	1.8 U
Heptachlor epoxide	--	11.0	190	53	1.8 U	1.8 U	1.9 U	**0.76 J**	1.8 U
Explosives (UG/KG)									
No Detections									
Total Metals (MG/KG)									
Aluminum	12,200	pH < 5.5	99,000	7,700	**7,900**	**3,870**	**6,760**	**11,600**	**9,290**
Antimony	11	78.0	41	3.1	5.2 R	5.4 R	5.4 R	**1.7 L**	5.5 R
Arsenic	6.36	18.0	1.6	0.39	**3.3 K**	**2.4 K**	**3.7 K**	**15.4 K**	**3.2 K**
Barium	52.9	330	19,000	1,500	**32.6**	**12.1 J**	**32.4**	**69.1**	**16.1 J**
Beryllium	0.587	40.0	200	16	**0.33 J**	**0.2 J**	**0.32 J**	**0.55**	**0.29 J**
Cadmium	1.5	32.0	80	7	**0.09 J**	**0.08 J**	**0.11 J**	**0.71**	**0.09 J**
Calcium	2,290	--	--	--	**1,010**	**395 J**	**930**	**6,170**	**802**
Chromium	18.2	64.0	5.6	0.29	**11**	**7.7**	**9.4**	**26.5**	**13.9**
Cobalt	9.93	13.0	30	2.3	**1.3 J**	**0.72 J**	**1.3 J**	**2.8 J**	**1.3 J**
Copper	4.25	70.0	4,100	310	**4.2**	**2 J**	**6**	**40.3**	**2.8**
Iron	19,900	pH < 5 or pH > 8	72,000	5,500	**7,950**	**5,020**	**7,760**	**15,800**	**9,320**
Lead	17.4	120	800	400	**21.3**	**8.8**	**18.7**	**60.7**	**6.4**
Magnesium	1,070	--	--	--	**650**	**600**	**615**	**1,930**	**852**
Manganese	324	220	2,300	180	**59.6 L**	**23.3 L**	**59.6 L**	**170 L**	**24 L**
Mercury	0.111	0.10	31	2.3	0.09 UL	0.084 UL	0.11 UL	**0.04 L**	0.11 UL
Nickel	9.52	38.0	2,000	150	**3.7**	**1.7 J**	**3.4 J**	**8**	**3.6 J**
Potassium	708	--	--	--	**555**	**893**	**470**	**1,590**	**1,090**
Selenium	0.51	0.52	510	39	3 U	3.1 U	3.2 U	**0.6 J**	3.2 U
Sodium	521	--	--	--	**31 J**	**18.7 J**	**24.3 J**	**125 J**	**26.4 J**
Thallium	--	1.00	1[1]	.078[1]	**0.08 J**	2.5 U	2.1 U	2.2 U	**0.06 J**

TABLE 7-1
AOC 8 Surface Soil Detection and Exceedance Results
Site Inspection Report: Areas of Concern 1, 2, 6, 7 and 8
Cheatham Annex
Williamsburg, Virginia

Station ID	**CLEAN CAX BKG SS**	**Eco Surface Soil Screening Value**	**CLEAN RSLs Industrial Soil Adjusted (Nov. 2010)**	**CLEAN RSLs Residential Soil Adjusted (Nov. 2010)**	CAA08-SO01	CAA08-SO02	CAA08-SO03	CAA08-SO04	CAA08-SO05
Sample ID					CAA08-SS01-1008	CAA08-SS02-1008	CAA08-SS03-1008	CAA08-SS04-1008	CAA08-SS05-1008
Sample Date					10/22/08	10/22/08	10/22/08	10/24/08	10/24/08
Sample Depth					0-6"	0-6"	0-6"	0-6"	0-6"
Chemical Name									
Vanadium	27.9	130	520	39	**15.3**	**10.8**	**13**	**26.3**	**21.2**
Zinc	26.5	120	31,000	2,300	**18**	**8.5**	**31.8**	**160**	**12.3**
Wet Chemistry									
% Solids (pct)	--	--	--	--	**92**	**88**	**89**	**92**	**92**
pH (ph)	--	--	--	--	**6.3**	**5.3**	**6.6**	**7.9**	**6.9**
Total organic carbon (TOC) (ug/g)	--	--	--	--	**21,000 K**	**12,000 K**	**9,800 K**	**45,000 K**	**12,000 K**

Notes:

Exceeds Background
Exceeds BKG & ECO
Exceeds BKG & Res RSL
Exceeds BKG, Res & Ind RSLs

Bold indicates detection
[1]Adjusted June 2011 RSL value
-- - No value available
NA - Not analyzed
B - Analyte not detected above the level reported in blanks
J - Analyte present, value may or may not be accurate or precise
K - Analyte present, value may be biased high, actual value may be lower
L - Analyte present, value may be biased low, actual value may be higher
R - Unreliable Result
U - Analyte not detected
UL - Analyte not detected, quantitation limit is probably higher
MG/KG - Milligrams per kilogram
PCT - Percent
PH - pH units
UG/G - Micrograms per gram
UG/KG - Micrograms per kilogram

TABLE 7-1
AOC 8 Surface Soil Detection and Exceedance Results
Site Inspection Report: Areas of Concern 1, 2, 6, 7 and 8
Cheatham Annex
Williamsburg, Virginia

Station ID	**CLEAN CAX BKG SS**	**Eco Surface Soil Screening Value**	**CLEAN RSLs Industrial Soil Adjusted (Nov. 2010)**	**CLEAN RSLs Residential Soil Adjusted (Nov. 2010)**	CAA08-SO06		CAA08-SO07	CAA08-SO08	CAA08-SO09	
Sample ID					CAA08-SS06-1008	CAA08-SS06P-1008	CAA08-SS07-1008	CAA08-SS08-1008	CAA08-SS09-1008	CAA08-SS09P-1008
Sample Date					10/27/08	10/27/08	10/27/08	10/28/08	10/28/08	10/28/08
Sample Depth					0-6"	0-6"	0-6"	0-6"	0-6"	0-6"
Chemical Name										
Volatile Organic Compounds (UG/KG)										
Acetone	--	--	63,000,000	6,100,000	3 B	12 U	11 U	3 B	3 B	3 B
Semivolatile Organic Compounds (UG/KG)										
Benzaldehyde	--	--	1,200,000	780,000	410 U	400 U	360 U	380 U	360 U	360 U
Benzo(b)fluoranthene	--	HMW PAH	2,100	150	410 U	400 U	360 U	**270 J**	360 U	360 U
Benzo(k)fluoranthene	--	HMW PAH	21,000	1,500	410 U	400 U	360 U	**210 J**	360 U	360 U
Chrysene	--	HMW PAH	210,000	15,000	410 U	400 U	360 U	380 U	360 U	360 U
Fluoranthene	--	LMW PAH	2,200,000	230,000	410 U	400 U	360 U	380 U	360 U	360 U
PAH (HMW)	--	18,000	--	--	1,845 U	1,800 U	1,620 U	**1,810**	1,620 U	1,620 U
PAH (LMW)	--	29,000	--	--	1,845 U	1,800 U	1,620 U	**1,710**	1,620 U	1,620 U
Pyrene	--	HMW PAH	1,700,000	170,000	410 U	400 U	360 U	380 U	360 U	360 U
Pesticide/Polychlorinated Biphenyls (UG/KG)										
4,4'-DDD	--	583	7,200	2,000	3.8 U	3.8 U	3.7 U	**0.92 J**	3.6 U	3.6 U
4,4'-DDE	--	114	5,100	1,400	**0.31 J**	**0.64 J**	**1.3 J**	**2 J**	3.6 U	3.6 U
4,4'-DDT	--	100	7,000	1,700	3.8 U	3.8 U	**2.3 J**	**7.1 J**	3.6 U	3.6 U
Aroclor-1260	--	8,000	740	220	**110 J**	**190**	37 U	**180**	36 U	36 U
Dieldrin	--	10.5	110	30	3.8 U	3.8 U	3.7 U	3.9 U	3.6 U	3.6 U
Endrin aldehyde	--	1.95	18,000	1,800	**4.2 J**	**8.2 J**	**0.33 J**	**12 J**	3.6 U	3.6 U
gamma-Chlordane	--	52.9	6,500	1,600	1.9 U	1.9 U	1.9 U	2 U	1.8 U	1.8 U
Heptachlor epoxide	--	11.0	190	53	1.9 U	1.9 U	1.9 U	2 U	1.8 U	1.8 U
Explosives (UG/KG)										
No Detections										
Total Metals (MG/KG)										
Aluminum	12,200	pH < 5.5	99,000	7,700	**4,260**	**8,970**	**10,300**	**9,400**	**7,810**	**8,380**
Antimony	11	78.0	41	3.1	5.1 R	4.9 R	6.4 R	**0.71 L**	5.7 UL	4.3 UL
Arsenic	6.36	18.0	1.6	0.39	**1.8 K**	**3 K**	**3.5 K**	**9.1 K**	**2.4 L**	**2.5 L**
Barium	52.9	330	19,000	1,500	**8.1 J**	**19.5**	**68.4**	**47.6**	**42.3**	**45**
Beryllium	0.587	40.0	200	16	**0.35 J**	**0.4 J**	**0.47 J**	**0.37 J**	**0.48 J**	**0.48**
Cadmium	1.5	32.0	80	7	**0.12 J**	**0.17 J**	**0.14 J**	**0.38 J**	0.03 B	0.36 U
Calcium	2,290	--	--	--	**430**	**826**	**2,860**	**1,770**	**489 J**	**545 J**
Chromium	18.2	64.0	5.6	0.29	**18.7**	**20.5**	**20.6**	**16.8**	**7.6 K**	**8.1 K**
Cobalt	9.93	13.0	30	2.3	**1.7 J**	**2 J**	**3.3 J**	**1.8 J**	**2.5 J**	**2.5 J**
Copper	4.25	70.0	4,100	310	**2.6**	**4.1**	**7.3**	**21.4**	**3.6**	**3.6**
Iron	19,900	pH < 5 or pH > 8	72,000	5,500	**6,560**	**9,690**	**12,300**	**9,000**	**4,980**	**6,330**
Lead	17.4	120	800	400	**3 J**	**9.6 J**	**10.6**	**39.4**	**17.4**	**17.6**
Magnesium	1,070	--	--	--	**664**	**1,020**	**3,180**	**920**	**538**	**570**
Manganese	324	220	2,300	180	**17.6 L**	**24.4 L**	**144 L**	**72.3 L**	**106 L**	**110 L**
Mercury	0.111	0.10	31	2.3	0.098 UL	0.13 UL	0.1 UL	0.12 UL	0.11 UL	0.11 UL
Nickel	9.52	38.0	2,000	150	**4.5**	**5.3**	**8.3**	**5.4**	**4**	**4.2**
Potassium	708	--	--	--	**705**	**1,140**	**3,200**	**778**	**367 J**	**382**
Selenium	0.51	0.52	510	39	3 U	2.9 U	3.8 U	2.8 U	3.3 U	2.5 U
Sodium	521	--	--	--	**17.8 J**	**33.5 J**	**72.6 J**	**46.4 J**	**36.2 J**	**34.8 J**
Thallium	--	1.00	1[1]	.078[1]	2.2 U	2.2 U	2.1 U	1.7 U	2.4 U	1.8 U

TABLE 7-1
AOC 8 Surface Soil Detection and Exceedance Results
Site Inspection Report: Areas of Concern 1, 2, 6, 7 and 8
Cheatham Annex
Williamsburg, Virginia

Station ID	**CLEAN CAX BKG SS**	**Eco Surface Soil Screening Value**	**CLEAN RSLs Industrial Soil Adjusted (Nov. 2010)**	**CLEAN RSLs Residential Soil Adjusted (Nov. 2010)**	CAA08-SO06		CAA08-SO07	CAA08-SO08	CAA08-SO09	
Sample ID					CAA08-SS06-1008	CAA08-SS06P-1008	CAA08-SS07-1008	CAA08-SS08-1008	CAA08-SS09-1008	CAA08-SS09P-1008
Sample Date					10/27/08	10/27/08	10/27/08	10/28/08	10/28/08	10/28/08
Sample Depth					0-6"	0-6"	0-6"	0-6"	0-6"	0-6"
Chemical Name										
Vanadium	27.9	130	520	39	**19**	**27.4**	**28.9**	**17.9**	**11.8**	**12.7**
Zinc	26.5	120	31,000	2,300	**11.5**	**19**	**25.8**	**64.4**	**25.8**	**31.8**
Wet Chemistry										
% Solids (pct)	--	--	--	--	**81**	**83**	**90**	**86**	**92**	**93**
pH (ph)	--	--	--	--	**6.4**	NA	**8.1**	**7.6**	**5.8**	NA
Total organic carbon (TOC) (ug/g)	--	--	--	--	**3,400 K**	NA	**12,000 K**	**14,000 K**	**20,000**	NA

Notes:

Exceeds Background
Exceeds BKG & ECO
Exceeds BKG & Res RSL
Exceeds BKG, Res & Ind RSLs
Bold indicates detection
[1]Adjusted June 2011 RSL value
-- - No value available
NA - Not analyzed
B - Analyte not detected above the level reported in blanks
J - Analyte present, value may or may not be accurate or precise
K - Analyte present, value may be biased high, actual value may be lower
L - Analyte present, value may be biased low, actual value may be higher
R - Unreliable Result
U - Analyte not detected
UL - Analyte not detected, quantitation limit is probably higher
MG/KG - Milligrams per kilogram
PCT - Percent
PH - pH units
UG/G - Micrograms per gram
UG/KG - Micrograms per kilogram

TABLE 7-2
AOC 8 Subsurface Soil Detection and Exceedance Results
Site Inspection Report: Areas of Concern 1, 2, 6, 7 and 8
Cheatham Annex
Williamsburg, Virginia

Station ID	**CLEAN CAX BKG SB**	**Eco Surface Soil Screening Value**	**CLEAN RSLs Industrial Soil Adjusted (Nov. 2010)**	**CLEAN RSLs Residential Soil Adjusted (Nov. 2010)**	CAA08-SO01		CAA08-SO02	CAA08-SO03	CAA08-SO04	
Sample ID					CAA08-SB01-1008	CAA08-SBTP24-1008	CAA08-SB02-1008	CAA08-SB03-1008	CAA08-SBTP14-1008	CAA08-SB04-1008
Sample Date					10/22/08	10/27/08	10/22/08	10/22/08	10/23/08	10/24/08
Sample Depth					0.5-2'	20'	0.5-2'	0.5-2'	20'	0.5-2'
Chemical Name										
Volatile Organic Compounds (UG/KG)										
1,4-Dichlorobenzene	--	--	12,000	2,400	12 U	12 U	11 U	12 U	11 U	11 U
2-Butanone	--	--	20,000,000	2,800,000	12 U	12 U	11 U	12 U	11 U	11 U
Semivolatile Organic Compounds (UG/KG)										
No Detections					NA	NA	NA	NA		
Pesticide/Polychlorinated Biphenyls (UG/KG)										
4,4'-DDD	--	583	7,200	2,000	3.5 U	4 U	4.1 U	3.7 U	7.4 U	7.2 U
4,4'-DDE	--	114	5,100	1,400	3.5 U	4 U	4.1 U	**0.38 J**	**7.2 J**	**4.5 J**
4,4'-DDT	--	100	7,000	1,700	3.5 U	4 U	4.1 U	**0.48 J**	7.4 U	**24 J**
alpha-BHC	--	226	270	77	1.8 U	2 U	2 U	1.9 U	3.7 U	**0.81 J**
Aroclor-1260	--	8,000	740	220	35 U	**36 J**	41 U	37 U	**400**	**500 J**
Endrin	--	1.95	18,000	1,800	3.5 U	**0.48 J**	4.1 U	3.7 U	7.4 U	7.2 U
Endrin aldehyde	--	1.95	18,000	1,800	3.5 U	**2.2 J**	4.1 U	**0.36 J**	**22 J**	**24 J**
Heptachlor	--	--	380	110	1.8 U	2 U	2 U	1.9 U	3.7 U	3.6 U
Heptachlor epoxide	--	52.9	190	53	1.8 U	2 U	2 U	1.9 U	3.7 U	**1.7 J**
Explosives (UG/KG)										
No Detections					NA	NA	NA	NA		
Total Metals (MG/KG)										
Aluminum	13,000	pH < 5.5	99,000	7,700	**9,820**	**3,730**	**5,410**	**9,610**	**12,500**	**7,970**
Antimony	--	78.0	41	3.1	3.9 R	**0.48 L**	4.1 R	6.9 R	4.5 R	**0.33 L**
Arsenic	5.54	18.0	1.6	0.39	**3 K**	**9.2 K**	**5 K**	**3.7 K**	**3.6 K**	**6.7 K**
Barium	84.5	330	19,000	1,500	**35.7**	**5.7 J**	**8.1 J**	**35.4**	**29.6**	**38.7**
Beryllium	0.52	40.0	200	16	**0.31 J**	**0.2 J**	**0.28 J**	**0.42 J**	**0.38 J**	**0.46 J**
Cadmium	--	32.0	80	7	**0.06 J**	**0.08 J**	0.04 B	**0.1 J**	0.02 B	**0.45 J**
Calcium	2,380	--	--	--	**590**	**451**	**389**	**730**	**943**	**4,350**
Chromium	33.7	64.0	5.6	0.29	**11.5**	**13.8**	**15.7**	**14.7**	**18.8**	**15.8**
Cobalt	5.18	13.0	30	2.3	**1.4 J**	**0.44 J**	**0.63 J**	**1.6 J**	**1.7 J**	**2.3 J**
Copper	3.17	70.0	4,100	310	**3.7**	**3.6**	**1.9**	**3.9**	**2.6**	**13.2**
Iron	32,000	pH < 5 or pH > 8	72,000	5,500	**7,450**	**5,250**	**7,250**	**9,270**	**11,000**	**10,100**
Lead	8.79	120	800	400	**17.6**	**4.5**	**3.4**	**19.4**	**4.3**	**43.1**
Magnesium	1,120	--	--	--	**700**	**448**	**1,010**	**996**	**987**	**1,770**
Manganese	176	220	2,300	180	**50.7 L**	**22 L**	**13.3 L**	**65 L**	**25.6 L**	**112 L**
Mercury	0.14	0.10	31	2.3	0.1 UL	0.12 UL	0.088 UL	0.09 UL	0.1 UL	**0.04 L**
Nickel	17.6	38.0	2,000	150	**4.2**	**1.1 J**	**2 J**	**4.6**	**4.4**	**5.6**
Potassium	901	--	--	--	**609**	**605**	**1,660**	**1,040**	**949**	**1,510**
Selenium	0.64	0.52	510	39	2.3 U	**0.4 J**	2.4 U	4 U	**0.37 J**	3.6 U
Sodium	811	--	--	--	**36 J**	**15.1 J**	**21.9 J**	**29.1 J**	**56 J**	**65.3 J**
Vanadium	48.3	130	520	39	**17**	**14.8**	**18.6**	**18.8**	**28**	**21**
Zinc	28	120	31,000	2,300	**15.2**	**13.7**	**7.8**	**20.5**	**13.2**	**88.8**

TABLE 7-2
AOC 8 Subsurface Soil Detection and Exceedance Results
Site Inspection Report: Areas of Concern 1, 2, 6, 7 and 8
Cheatham Annex
Williamsburg, Virginia

Station ID	**CLEAN CAX BKG SB**	**Eco Surface Soil Screening Value**	**CLEAN RSLs Industrial Soil Adjusted (Nov. 2010)**	**CLEAN RSLs Residential Soil Adjusted (Nov. 2010)**	CAA08-SO01		CAA08-SO02	CAA08-SO03	CAA08-SO04	
Sample ID					CAA08-SB01-1008	CAA08-SBTP24-1008	CAA08-SB02-1008	CAA08-SB03-1008	CAA08-SBTP14-1008	CAA08-SB04-1008
Sample Date					10/22/08	10/27/08	10/22/08	10/22/08	10/23/08	10/24/08
Sample Depth					0.5-2'	20'	0.5-2'	0.5-2'	20'	0.5-2'
Chemical Name										
Wet Chemistry										
% Solids (pct)	--	--	--	--	**80**	**80**	**87**	**85**	**94**	**92**
pH (ph)	--	--	--	--	**6.3**	**7.4**	**5.7**	**6.6**	**7.1**	**7.3**
Total organic carbon (TOC) (ug/g)	--	--	--	--	**12,000 K**	**560 K**	**1,000 K**	**6,500 K**	**2,900 K**	**35,000 K**

Notes:

Exceeds Background
Exceeds BKG & ECO
Exceeds BKG & Res RSL
Exceeds BKG, Res & Ind RSLs
Exceeds BKG, ECO, Res & Ind RSLs
Bold indicates detection
-- - No value available
NA - Not analyzed
B - Analyte not detected above the level reported in blanks
J - Analyte present, value may or may not be accurate or precise
K - Analyte present, value may be biased high, actual value may be lower
L - Analyte present, value may be biased low, actual value may be higher
R - Unreliable Result
U - Analyte not detected
UL - Analyte not detected, quantitation limit is probably higher
MG/KG - Milligrams per kilogram
PCT - Percent
PH - pH units
UG/G - Micrograms per gram
UG/KG - Micrograms per kilogram

TABLE 7-2
AOC 8 Subsurface Soil Detection and Exceedance Results
Site Inspection Report: Areas of Concern 1, 2, 6, 7 and 8
Cheatham Annex
Williamsburg, Virginia

Station ID	**CLEAN CAX BKG SB**	**Eco Surface Soil Screening Value**	**CLEAN RSLs Industrial Soil Adjusted (Nov. 2010)**	**CLEAN RSLs Residential Soil Adjusted (Nov. 2010)**	CAA08-SO05		CAA08-SO06		CAA08-SO07	CAA08-SO08
Sample ID					CAA08-SB05-1008	CAA08-SBTP19-1008	CAA08-SB06-1008	CAA08-SB06P-1008	CAA08-SB07-1008	CAA08-SB08-1008
Sample Date					10/24/08	10/24/08	10/27/08	10/27/08	10/27/08	10/28/08
Sample Depth					0.5-2'	20'	0.5-2'	0.5-2'	0.5-2'	0.5-2'
Chemical Name										
Volatile Organic Compounds (UG/KG)										
1,4-Dichlorobenzene	--	--	12,000	2,400	10 U	**1 J**	12 U	12 U	12 U	11 U
2-Butanone	--	--	20,000,000	2,800,000	10 U	**2 J**	**2 J**	12 U	12 U	11 U
Semivolatile Organic Compounds (UG/KG)										
No Detections										
Pesticide/Polychlorinated Biphenyls (UG/KG)										
4,4'-DDD	--	583	7,200	2,000	**1.3 J**	390 U	4 U	4 U	**4**	3.7 U
4,4'-DDE	--	114	5,100	1,400	**6.8**	**390 J**	**0.34 J**	4 U	**7.8**	3.7 U
4,4'-DDT	--	100	7,000	1,700	**3 J**	390 U	4 U	4 U	**13**	**0.53 J**
alpha-BHC	--	226	270	77	1.8 U	190 U	2 U	2 U	1.9 U	1.8 U
Aroclor-1260	--	8,000	740	220	35 U	**26,000 J**	40 U	40 U	37 U	37 U
Endrin	--	1.95	18,000	1,800	3.5 U	390 U	**0.5 J**	4 U	3.7 U	3.7 U
Endrin aldehyde	--	1.95	18,000	1,800	3.5 U	**1,600 J**	**1.7 J**	**0.51 J**	3.7 U	**0.72 J**
Heptachlor	--	--	380	110	1.8 U	**31 J**	2 U	2 U	1.9 U	1.8 U
Heptachlor epoxide	--	52.9	190	53	1.8 U	190 U	2 U	2 U	1.9 U	1.8 U
Explosives (UG/KG)										
No Detections										
Total Metals (MG/KG)										
Aluminum	13,000	pH < 5.5	99,000	7,700	**5,630**	**4,020**	**4,140**	**4,890**	**8,870**	**8,230**
Antimony	--	78.0	41	3.1	4.2 R	4.8 R	5.5 R	5.1 R	5 UL	5.5 R
Arsenic	5.54	18.0	1.6	0.39	**2.7 K**	**1.4 K**	**1.5 K**	**2.4 K**	**4.4 L**	**3.5 K**
Barium	84.5	330	19,000	1,500	**14.4**	**10.5 J**	**8.5 J**	**9.2 J**	**40.5**	**30.1**
Beryllium	0.52	40.0	200	16	**0.42**	**0.38 J**	**0.36 J**	**0.37 J**	**0.32 J**	**0.32 J**
Cadmium	--	32.0	80	7	**0.44**	**0.86**	**0.1 J**	**0.12 J**	0.41 U	0.06 B
Calcium	2,380	--	--	--	**11,100**	**461**	**256 J**	**331 J**	**7,840 J**	**626**
Chromium	33.7	64.0	5.6	0.29	**14.8**	**14.3**	**15.9**	**19**	**25.8 K**	**10.9**
Cobalt	5.18	13.0	30	2.3	**1.8 J**	**1.7 J**	**1.6 J**	**2.7 J**	**2.3 J**	**1.4 J**
Copper	3.17	70.0	4,100	310	**2.3**	**6.8**	**2.2 J**	**2 J**	**6.5**	**4**
Iron	32,000	pH < 5 or pH > 8	72,000	5,500	**8,160**	**4,520**	**5,890**	**6,710**	**10,100**	**7,520**
Lead	8.79	120	800	400	**4.6**	**22.3**	**2.5**	**2.7**	**11.1**	**14**
Magnesium	1,120	--	--	--	**911**	**651**	**643**	**840**	**1,720**	**700**
Manganese	176	220	2,300	180	**31 L**	**22 L**	**16 L**	**18.7 L**	**84.1 L**	**42.2 L**
Mercury	0.14	0.10	31	2.3	0.1 UL	**0.87**	0.12 UL	0.13 UL	0.1 UL	0.11 UL
Nickel	17.6	38.0	2,000	150	**5.2**	**4.7**	**5.3**	**7.1**	**9.3**	**3.5 J**
Potassium	901	--	--	--	**1,120**	**707**	**740**	**948**	**1,560**	**721**
Selenium	0.64	0.52	510	39	**0.29 J**	2.8 U	3.2 U	3 U	2.9 U	3.2 U
Sodium	811	--	--	--	**159 J**	**19.9 J**	**16.8 J**	**17.4 J**	**69 J**	**20.6 J**
Vanadium	48.3	130	520	39	**18.4**	**16.8**	**16.9**	**17.3**	**22.6**	**16.2**
Zinc	28	120	31,000	2,300	**15.1**	**28.1**	**10.6**	**15.8**	**21**	**16.4**

TABLE 7-2
AOC 8 Subsurface Soil Detection and Exceedance Results
Site Inspection Report: Areas of Concern 1, 2, 6, 7 and 8
Cheatham Annex
Williamsburg, Virginia

Station ID	**CLEAN CAX BKG SB**	**Eco Surface Soil Screening Value**	**CLEAN RSLs Industrial Soil Adjusted (Nov. 2010)**	**CLEAN RSLs Residential Soil Adjusted (Nov. 2010)**	CAA08-SO05		CAA08-SO06		CAA08-SO07	CAA08-SO08
Sample ID					CAA08-SB05-1008	CAA08-SBTP19-1008	CAA08-SB06-1008	CAA08-SB06P-1008	CAA08-SB07-1008	CAA08-SB08-1008
Sample Date					10/24/08	10/24/08	10/27/08	10/27/08	10/27/08	10/28/08
Sample Depth					0.5-2'	20'	0.5-2'	0.5-2'	0.5-2'	0.5-2'
Chemical Name										
Wet Chemistry										
% Solids (pct)	--	--	--	--	**95**	**86**	**84**	**82**	**86**	**90**
pH (ph)	--	--	--	--	**8.4**	**7.8**	**5.2**	NA	**8.6**	**7.4**
Total organic carbon (TOC) (ug/g)	--	--	--	--	**7,900 K**	**2,700 K**	**800 K**	NA	**7,300**	**4,500 K**

Notes:

Exceeds Background
Exceeds BKG & ECO
Exceeds BKG & Res RSL
Exceeds BKG, Res & Ind RSLs
Exceeds BKG, ECO, Res & Ind RSLs
Bold indicates detection
-- - No value available
NA - Not analyzed
B - Analyte not detected above the level reported in blanks
J - Analyte present, value may or may not be accurate or precise
K - Analyte present, value may be biased high, actual value may be lower
L - Analyte present, value may be biased low, actual value may be higher
R - Unreliable Result
U - Analyte not detected
UL - Analyte not detected, quantitation limit is probably higher
MG/KG - Milligrams per kilogram
PCT - Percent
PH - pH units
UG/G - Micrograms per gram
UG/KG - Micrograms per kilogram

TABLE 7-2
AOC 8 Subsurface Soil Detection and Exceedance Results
Site Inspection Report: Areas of Concern 1, 2, 6, 7 and 8
Cheatham Annex
Williamsburg, Virginia

Station ID	**CLEAN CAX BKG SB**	**Eco Surface Soil Screening Value**	**CLEAN RSLs Industrial Soil Adjusted (Nov. 2010)**	**CLEAN RSLs Residential Soil Adjusted (Nov. 2010)**	CAA08-SO09	
Sample ID					CAA08-SB09-1008	CAA08-SB09P-1008
Sample Date					10/28/08	10/28/08
Sample Depth					0.5-2'	0.5-2'
Chemical Name						
Volatile Organic Compounds (UG/KG)						
1,4-Dichlorobenzene	--	--	12,000	2,400	10 U	10 U
2-Butanone	--	--	20,000,000	2,800,000	10 U	10 U
Semivolatile Organic Compounds (UG/KG)						
No Detections						
Pesticide/Polychlorinated Biphenyls (UG/KG)						
4,4'-DDD	--	583	7,200	2,000	3.5 U	3.5 U
4,4'-DDE	--	114	5,100	1,400	3.5 U	3.5 U
4,4'-DDT	--	100	7,000	1,700	3.5 U	3.5 U
alpha-BHC	--	226	270	77	1.8 U	1.8 U
Aroclor-1260	--	8,000	740	220	35 U	35 U
Endrin	--	1.95	18,000	1,800	3.5 U	3.5 U
Endrin aldehyde	--	1.95	18,000	1,800	3.5 U	3.5 U
Heptachlor	--	--	380	110	1.8 U	1.8 U
Heptachlor epoxide	--	52.9	190	53	1.8 U	1.8 U
Explosives (UG/KG)						
No Detections						
Total Metals (MG/KG)						
Aluminum	13,000	pH < 5.5	99,000	7,700	**7,500**	**7,480**
Antimony	--	78.0	41	3.1	3.3 UL	3.9 UL
Arsenic	5.54	18.0	1.6	0.39	**1.8 L**	**2.1 L**
Barium	84.5	330	19,000	1,500	**41.8**	**46.9**
Beryllium	0.52	40.0	200	16	**0.35**	**0.4**
Cadmium	--	32.0	80	7	0.27 U	0.33 U
Calcium	2,380	--	--	--	**331 J**	**350 J**
Chromium	33.7	64.0	5.6	0.29	**7.4 K**	**7.6 K**
Cobalt	5.18	13.0	30	2.3	**1.8 J**	**2.1 J**
Copper	3.17	70.0	4,100	310	**1.6**	**1.6**
Iron	32,000	pH < 5 or pH > 8	72,000	5,500	**4,380**	**4,700**
Lead	8.79	120	800	400	**6.2**	**6.9**
Magnesium	1,120	--	--	--	**510**	**508**
Manganese	176	220	2,300	180	**59 L**	**72.5 L**
Mercury	0.14	0.10	31	2.3	0.1 UL	0.11 UL
Nickel	17.6	38.0	2,000	150	**3.3**	**3.5**
Potassium	901	--	--	--	**341**	**314 J**
Selenium	0.64	0.52	510	39	1.9 U	2.3 U
Sodium	811	--	--	--	**31 J**	**25.8 J**
Vanadium	48.3	130	520	39	**10.7**	**10.7**
Zinc	28	120	31,000	2,300	**10.6**	**11.2**

TABLE 7-2
AOC 8 Subsurface Soil Detection and Exceedance Results
Site Inspection Report: Areas of Concern 1, 2, 6, 7 and 8
Cheatham Annex
Williamsburg, Virginia

Station ID	**CLEAN CAX BKG SB**	**Eco Surface Soil Screening Value**	**CLEAN RSLs Industrial Soil Adjusted (Nov. 2010)**	**CLEAN RSLs Residential Soil Adjusted (Nov. 2010)**	CAA08-SO09	
Sample ID					CAA08-SB09-1008	CAA08-SB09P-1008
Sample Date					10/28/08	10/28/08
Sample Depth					0.5-2'	0.5-2'
Chemical Name						
Wet Chemistry						
% Solids (pct)	--	--	--	--	**94**	**95**
pH (ph)	--	--	--	--	**5.7**	NA
Total organic carbon (TOC) (ug/g)	--	--	--	--	**8,100**	NA

Notes:

Exceeds Background
Exceeds BKG & ECO
Exceeds BKG & Res RSL
Exceeds BKG, Res & Ind RSLs
Exceeds BKG, ECO, Res & Ind RSLs

Bold indicates detection
-- - No value available
NA - Not analyzed
B - Analyte not detected above the level reported in blanks
J - Analyte present, value may or may not be accurate or precise
K - Analyte present, value may be biased high, actual value may be lower
L - Analyte present, value may be biased low, actual value may be higher
R - Unreliable Result
U - Analyte not detected
UL - Analyte not detected, quantitation limit is probably higher
MG/KG - Milligrams per kilogram
PCT - Percent
PH - pH units
UG/G - Micrograms per gram
UG/KG - Micrograms per kilogram

TABLE 7-3
AOC 8 Groundwater Detection and Exceedance Results
Site Inspection Report: Areas of Concern 1, 2, 6, 7 and 8
Cheatham Annex
Williamsburg, Virginia

Station ID	CLEAN CAX BKG GW YE AQUIFER	Eco Surface Water Screening Value - Marine	CLEAN MCL-Groundwater (Nov. 2010)	CLEAN RSLs Tapwater Adjusted (Nov. 2010)	CAA08-DW01	CAA08-DW02	CAA08-DW03	CAA08-DW04	
Sample ID					CAA08-DW01-1008	CAA08-DW02-1008	CAA08-DW03-1008	CAA08-DW04-1008	CAA08-DW04P-1008
Sample Date					10/28/08	10/28/08	10/27/08	10/27/08	10/27/08
Chemical Name									
Volatile Organic Compounds (UG/L)									
Tetrachloroethene	--	45.0	5	0.11	10 U	**7 J**	10 U	10 U	10 U
Semivolatile Organic Compounds (UG/L)									
No Detections									
Pesticide/Polychlorinated Biphenyls (UG/L)									
No Detections									
Explosives (UG/L)									
No Detections									
Total Metals (UG/L)									
Aluminum	2,230	87.0	--	3,700	1,050 B	**1,900**	127 B	**841**	**470**
Arsenic	2.28	36.0	10	0.045	5.6 B	10.1 B	4.3 B	**14.6**	13.9 B
Barium	118	200	2,000	730	**15.2 J**	**20.6 J**	**12.7 J**	**16.7 J**	**15.8 J**
Beryllium	2.45	100	4	7.3	5 U	**0.18 J**	5 U	5 U	5 U
Cadmium	0.605	8.85	5	1.8	0.19 B	**1.1 J**	0.52 B	**0.85 J**	0.67 B
Calcium	169,000	--	--	--	**99,300**	**76,800**	**83,800**	**96,700**	**92,800**
Cobalt	20.6	23.0	--	1.1	**4.4 J**	3 B	**1.1 J**	**5.8 J**	**5.4 J**
Iron	894	1,000	--	2,600	1,700 B	3,270 B	433 B	**8,300**	**7,400**
Lead	21.3	8.52	15	--	10 U	3.1 B	**1.2 J**	**1.1 J**	10 U
Magnesium	11,500	--	--	--	**2,540 J**	**1,750 J**	**2,310 J**	**3,720 J**	**3,590 J**
Manganese	57.9	100	--	88	**55.8**	**60.4**	**20.7**	**246**	**238**
Potassium	12,700	--	--	--	**1,220 J**	**1,510 J**	**548 L**	**3,410 J**	**3,210 J**
Selenium	--	71.1	50	18	**1.4 J**	35 U	35 U	35 U	35 U
Sodium	64,500	--	--	--	**4,270 J**	**6,950**	**7,680**	**16,200**	**15,600**
Vanadium	26.2	50.0	--	18	3.6 B	**8.2 J**	0.62 B	3.4 B	2 B
Dissolved Metals (UG/L)									
Aluminum, Dissolved	100	87.0	--	3,700	**122 J**	**135 J**	114 B	**140 J**	**125 J**
Arsenic, Dissolved	1.37	36.0	10	0.045	4.5 B	4.4 B	4.6 B	**13.8**	12.4 B
Barium, Dissolved	127	200	2,000	730	**12.2 J**	**13.5 J**	**13.3 J**	**14.8 J**	**14.7 J**
Calcium, Dissolved	113,000	--	--	--	**99,500**	**76,400**	**84,100**	**92,300**	**91,700**
Chromium, Dissolved	6.04	50.0	100	0.043	**0.76 J**	10 U	**0.51 J**	10 U	**0.41 J**
Cobalt, Dissolved	0.7	23.0	--	1.1	**1.5 J**	**1.5 J**	**0.82 J**	**5.2 J**	**5.2 J**
Copper, Dissolved	3	3.10	1,300	150	1.7 B	0.91 B	25 U	**1.4 J**	25 U
Iron, Dissolved	275	1,000	--	2,600	49.3 B	**208**	**295**	**6,650**	**6,720**
Magnesium, Dissolved	11,200	--	--	--	**2,370 J**	**1,280 J**	**2,280 J**	**3,520 J**	**3,550 J**
Manganese, Dissolved	49.5	100	--	88	**16.4**	**32.4**	**17.7**	**240**	**237**
Nickel, Dissolved	12.2	8.20	--	73	2.7 B	**5.5 J**	**3.6 J**	3 B	**3.2 J**
Potassium, Dissolved	12,600	--	--	--	**852 L**	**932 L**	**584 L**	**3,130 J**	**3,140 J**
Sodium, Dissolved	62,800	--	--	--	**4,280 J**	**6,820**	**7,690**	**15,900**	**15,700**
Thallium, Dissolved	--	21.3	2	0.037[1]	25 U	1.6 B	25 U	**1.9 J**	25 U
Vanadium, Dissolved	4.3	50.0	--	18	50 U	**0.64 J**	**0.54 J**	**0.54 J**	**0.43 J**

Notes:

Exceeds Background
Exceeds BKG & ECO
Exceeds BKG & Tapwater RSL
Exceeds BKG, Tapwater RSL & MCL
Exceeds BKG, ECO & Tapwater RSL
Bold indicates detection
[1]Adjusted June 2011 RSL
-- - No value available
B - Analyte not detected above the level reported in blanks
J - Analyte present, value may or may not be accurate or precise
L - Analyte present, value may be biased low, actual value may be higher
U - Analyte not detected
UG/L - Micrograms per liter

From: Smith, Wade (DEQ) <Wade.Smith@deq.virginia.gov>
Sent: Monday, August 06, 2012 9:13 AM
To: scott.park@navy.mil
Cc: Ivester, Marlene/VBO; Sawyer, Stephanie/VBO; Haug.Susanne@epamail.epa.gov
Subject: CAX: AOC 8 SAP - DEQ Comments

Follow Up Flag: Follow up
Flag Status: Completed

Thank you for giving the DEQ the opportunity to comment on the July 2012 Draft SAP for AOC 8 at CAX.

The Draft SAP was received by the DEQ on July 6, 2012.

Based on the scoping sessions associated with this Draft SAP, the DEQ concurs with the Sampling Design and Rationale and has two additional minor comments on the document:

Please replace John Burchette with Susanne Haug, EPA RPM, throughout document as appropriate; and

Please replace “summed up” with “summarized” in Section 2.1.1.

Upon your submittal of the Draft Final SAP, the DEQ will issue an official letter for your files.

Please let me know if you have any questions.

Sincerely,

Wade M. Smith
Remediation Project Manager
Virginia Department of Environmental Quality
Office of Remediation Programs
Phone: (804) 698-4125
wade.smith@deq.virginia.gov

Response to Comments
Remedial Investigation
Sampling and Analysis Plan
AOC 8 – Area South of Site 7
Naval Weapons Station Yorktown Cheatham Annex
Williamsburg, VA
January 3, 2013

Comments received by email on August 6, 2012 from Wade Smith, Virginia Department of Environmental Quality.

VDEQ Comment 1: Please replace John Burchette with Susanne Haug, EPA RPM, throughout document as appropriate.

Response: The UFP-SAP was revised to reference Sue Haug (as opposed to John Burchette) as the EPA RPM where applicable.

VDEQ Comment 2: Please replace "summed up" with "summarized" in Section 2.1.1.

Response: As recommended by the DEQ, the suggested edit was made.

UNITED STATES ENVIRONMENTAL PROTECTION AGENCY
REGION III
1650 Arch Street
Philadelphia, Pennsylvania 19103-2029

February 6, 2013

Mr. Scott Park
NAVFAC MIDLANT, Building N-26, Room 3208
Attention: Code OPHE3, Mr. Scott Park
9742 Maryland Avenue
Norfolk, VA 23511-3095

Subject: Response to Comments, Remedial Investigation, Sampling and Analysis Plan, AOC 8 – Area South of Site 7, Naval Weapons Station Yorktown Cheatham Annex, Williamsburg, Virginia, January 3, 2013

Mr. Park:

Thank you for the opportunity to review the subject document. Although many responses were acceptable, others require further discussion as described below. Any responses not listed below are acceptable. We would be happy to discuss any comments on a phone conference.

1. Comment 5 stated that because the data collected from the proposed soil and groundwater samples will be used in the remedial investigation and the variability that can occur between samples of these media, analyses of the proposed samples need to include the original list of contaminants used in the former site investigation process. The RTC states that spatial coverage is adequate to determine contaminants of potential concern (COPCs), thus no additional analytes are needed. While the area of AOC 8 is not large (approximately 210 feet by 350 feet), there were only 5 soil sample locations and 4 groundwater/soil sample locations sampled. However, approximately 50% of the surface area of AOC 8 did not have soil or groundwater/soil sample locations. Therefore, the limited number of samples and the limited area sampled along with the variability of concentrations that can be found in soil samples suggests that identifying COPCs at the site investigation stage at AOC 8 is premature.

2. Comment 6 stated that the location of the debris outcrops should be identified to ensure the previous and proposed sampling locations include this area as a potential source of contamination. The RTC states that the debris outcrop is inside the berm of AOC 8. Due to the fact that this AOC is located less than 70 feet from the cliff that is adjacent to the York River opens up the concern of whether contamination from this site has entered the York River or habitats adjacent to the York River via groundwater migration or surface

water flow (before the berm was installed). Two soil samples should be collected on the east side of the site between the berm and the edge of the cliff.

3. Also pertaining to the RTC for Comment 6, the RTC states that the 2008 site investigation soil sample locations have adequately characterized this area as a potential source of contamination. This debris area is identified in Figure 1 (attached to the RTC). According to this attached figure, there are no historical or proposed soil samples in the vicinity of this debris area.

4. Comment 7 stated that food chain modeling should be performed for receptors with small home ranges (e.g., short-tailed shrew [*Blarina brevicauda*] shrew and American robin [*Turdus migratorius*]). The RTC states that while the total site area may be 1.5 acres, only about 0.25 acres of the site has surface debris and 0.7 acres has buried debris. The RTC states that these areas are too small for significant exposure to occur for upper-trophic level receptors. BTAG still does not support this position. Even if area use is not 100% because of the small size of the site, food chain modeling should be performed on receptors with small home ranges to assess this exposure pathway.

5. Comment 9 stated that the initial and final COPCs for plants and invertebrates need to be based on maximum concentrations, not mean values. The RTC states that final COPCs (Step 3A) will consider mean and 95% UCL soil concentrations, per Navy ERA guidance. While comparison to means and 95% UCL soil concentrations can be used to establish a risk range, chemicals should not be deleted as COPCs based on a comparison to means alone. This issue should be clarified.

6. Comment 13 stated that it is unlikely that buried debris exists below the groundwater table, which is estimated to be less than 30 feet bgs. The comment stated that information should be provided to support this statement, otherwise it should be removed. The RTC states that while it is not irrefutable, the depth to groundwater data can infer the likely maximum depth of debris at the site. Based on data from other Superfund Sites pertaining to buried debris and the depth to water, the stated inference (e.g., depth to groundwater is the likely maximum depth of debris) may not be correct, particularly since the groundwater table can fluctuate seasonally and annually.

7. Comment 16 stated that additional information needed to be provided to support the use of the 50 microgram per kilogram (µg/kg) as the threshold for routine basewide pesticide application. The RTC states that this threshold was based on a discussion with BTAG, and that BTAG stated that the background from routine spraying tends to be less than 50 µg/kg. While background from routine spraying would be less than 50 µg/kg, it is likely much lower than this level. BTAG recommends that a site-specific threshold be developed with data collected from sites on the base where pesticides were not handled or disposed and thus only received routine aerial pesticide application.

If you have any questions, please contact me at 215-814-3394.

Sincerely,

Susanne Haug, P.E.
NPL/BRAC Federal Facilities Branch

cc: Wade Smith, VDEQ

Round 2 Response to Comments
Remedial Investigation
Sampling and Analysis Plan
AOC 8 – Area South of Site 7
Naval Weapons Station Yorktown Cheatham Annex
Williamsburg, VA
April 9, 2013

Comments received by email on February 6, 2013 from Susanne Haug, Environmental Protection Agency, Region 3. Subsequently, the USEPA, the VDEQ, the Navy, and CH2M HILL (and their associated technical support) discussed and agreed on how to address each comment during a conference call on March 28, 2013.

EPA Comment #1: Comment 5 stated that because the data collected from the proposed soil and groundwater samples will be used in the remedial investigation and the variability that can occur between samples of these media, analyses of the proposed samples need to include the original list of contaminants used in the former site investigation process. The RTC states that spatial coverage is adequate to determine contaminants of potential concern (COPCs), thus no additional analytes are needed. While the area of AOC 8 is not large (approximately 210 feet by 350 feet), there were only 5 soil sample locations and 4 groundwater/soil sample locations sampled. However, approximately 50% of the surface area of AOC 8 did not have soil or groundwater/soil sample locations. Therefore, the limited number of samples and the limited area sampled along with the variability of concentrations that can be found in soil samples suggests that identifying COPCs at the site investigation stage at AOC 8 is premature.

<u>Navy Response:</u> Since COPCs have not formally been identified, all references to COPCs will be removed from the UFP-SAP in favor of "site-related contaminants."

During the March 28, 2013 conference call, the CAX Partnering Team, with the concurrence of technical support, agreed that in order to address the EPA's concern that there are a limited number of soil samples within the area of surface debris, three 5-point composite surface soil (0-6" bgs) and three 5-point composite subsurface soil (6-24") samples will be collected from the area of observed surficial debris (attached Figure 1). The surface and subsurface sample components making up the 5-point composites will be co-located, and will be collected from each of 3 roughly equal-sized areas comprising the surface debris area as shown in Figure 1. In substitution for the additional three 5-point composite samples within the surface debris area, the originally proposed discrete surface and subsurface soil sample to be collected at the groundwater sampling location within this area will not be collected. The 5-point composite samples will be analyzed for PAHs, pesticides, PCBs, and metals. (Note: An additional 5-point composite sample to be collected from the vicinity of the visible debris within the berm is discussed in the response to EPA Comment #3 below.)

In addition, during this conference call, the USEPA's technical support expressed some concerns about the absence of soil samples within the low-lying area located east of where buried debris was encountered. To address this concern, the CAX Partnering Team, with the concurrence of technical support, agreed that the co-located surface and subsurface soil samples, originally to be co-located with the southeastern-most monitoring well, would be moved to within the low-lying area (approximate location shown on attached Figure 1; actual location will be determined in the field). The co-located

surface and subsurface soil samples at this location will be analyzed for PAHs, pesticides, PCBs, and metals.

With the addition of the three co-located surface/subsurface soil 5-point composite samples in the surface debris area in substitution for one discrete sample location, the movement of one co-located surface/subsurface soil sample location to within the low-lying area of the site, and the fact that all the existing SI soil data (which included full suite analysis) will be further evaluated in the RI and incorporated into the human health and ecological risk assessments, the CAX Partnering Team agreed that the numbers and locations of the samples to be evaluated in the RI are sufficient to achieve the objectives of the RI. The UFP-SAP was updated to include the sampling and analysis of the soil samples outlined above.

EPA Comment #2: Comment 6 stated that the location of the debris outcrops should be identified to ensure the previous and proposed sampling locations include this area as a potential source of contamination. The RTC states that the debris outcrop is inside the berm of AOC 8. Due to the fact that this AOC is located less than 70 feet from the cliff that is adjacent to the York River opens up the concern of whether contamination from this site has entered the York River or habitats adjacent to the York River via groundwater migration or surface water flow (before the berm was installed). Two soil samples should be collected on the east side of the site between the berm and the edge of the cliff.

<u>Navy Response:</u> Based on field observations, it appears as though the so-called berm was not "installed" as a berm following debris disposal activities at AOC 8, but is rather a remnant feature created as a result of borrow material excavation activities at the site prior to waste disposal. This is evident by the fact that the topographic elevations of the areas surrounding the site are consistent with the elevations of the top of the berm (see attached photographs). Based on the evidence that the so-called berm is a remnant from pre-waste disposal excavation activities, there would have been no contamination from the site that migrated via surface water flow or entered the York River via groundwater migration or surface water flow before the berm was present.

As shown in the attached photographs, the eastern extent of the so-called berm forms the edge of the cliff that drops down 20 feet to the York River. Therefore, the team agreed during the March 28, 2013 conference call, no soil sampling east of the berm in this area was necessary. However, as part of the RI, two groundwater samples are being collected from as close to the York River as site conditions allow.

As previously stated in the Round 1 RTCs, the RI data will be evaluated to determine whether or not data gaps exist. If this evaluation indicates additional RI data are needed (such as searching for groundwater seeps or evaluating potential groundwater discharge areas) to adequately fulfill the objectives of the RI, an addendum to the UFP-SAP will be prepared for Partnering Team review, prior to the completion of the RI Report. No additional changes were made to the SAP.

EPA Comment #3: Also pertaining to the RTC for Comment 6, the RTC states that the 2008 site investigation soil sample locations have adequately characterized this area as a potential source of contamination. This debris area is identified in Figure 1 (attached to the RTC). According to this attached figure, there are no historical or proposed soil samples in the vicinity of this debris area.

<u>Navy Response:</u> While several soil samples have been collected in the area downslope of the visible debris along the inside of the berm, no samples have been collected in the immediate vicinity of this debris. Therefore, during the March 28, 2013 conference call the CAX Partnering Team, with the concurrence of technical support, agreed that one 5-point composite surface (0-6" bgs) and one 5-point composite subsurface (6-24" bgs) soil sample will be collected from the immediate area of the visible debris (see the area along the northern edge of the site boundary in the attached Figure 1). This soil

sample will be analyzed for PAHs, pesticides, PCBs, and metals. The UFP-SAP was updated to include the collection of this soil sample.

EPA Comment #4: Comment 7 stated that food chain modeling should be performed for receptors with small home ranges (e.g., short-tailed shrew [Blarina brevicauda] shrew and American robin [Turdus migratorius]). The RTC states that while the total site area may be 1.5 acres, only about 0.25 acres of the site has surface debris and 0.7 acres has buried debris. The RTC states that these areas are too small for significant exposure to occur for upper-trophic level receptors. BTAG still does not support this position. Even if area use is not 100% because of the small size of the site, food chain modeling should be performed on receptors with small home ranges to assess this exposure pathway.

Navy Response: Food web modeling will be added to the risk assessment. However, appropriate Area Use Factors may be applied to account for the small size of the potentially impacted areas. The Ecological Decision Logic (Section 2.3.2) in the SAP was revised to include Food web modeling.

EPA Comment #5: Comment 9 stated that the initial and final COPCs for plants and invertebrates need to be based on maximum concentrations, not mean values. The RTC states that final COPCs (Step 3A) will consider mean and 95% UCL soil concentrations, per Navy ERA guidance. While comparison to means and 95% UCL soil concentrations can be used to establish a risk range, chemicals should not be deleted as COPCs based on a comparison to means alone. This issue should be clarified.

Navy Response: In Step 3A, central tendency exposure point concentrations (mean and 95% UCL) will be a primary consideration in determining if a chemical should be identified as a COPC, as will comparisons to background concentrations. However, other factors, such as the magnitude of the maximum HQ and the spatial pattern of screening value exceedances, will also be considered when making this determination. This information was added to Section 2.3.2 of the SAP.

EPA Comment #6: Comment 13 stated that it is unlikely that buried debris exists below the groundwater table, which is estimated to be less than 30 feet bgs. The comment stated that information should be provided to support this statement, otherwise it should be removed. The RTC states that while it is not irrefutable, the depth to groundwater data can infer the likely maximum depth of debris at the site. Based on data from other Superfund Sites pertaining to buried debris and the depth to water, the stated inference (e.g., depth to groundwater is the likely maximum depth of debris) may not be correct, particularly since the groundwater table can fluctuate seasonally and annually.

Navy Response: As discussed during the March 28, 2013 conference call, the original response/resolution to Comment #13 ("….. this text was deleted from the UFP-SAP……") is acceptable. No additional changes were made to the SAP.

EPA Comment #7: Comment 16 stated that additional information needed to be provided to support the use of the 50 microgram per kilogram (µg/kg) as the threshold for routine basewide pesticide application. The RTC states that this threshold was based on a discussion with BTAG, and that BTAG stated that the background from routine spraying tends to be less than 50 µg/kg. While background from routine spraying would be less than 50 µg/kg, it is likely much lower than this level. BTAG recommends that a site-specific threshold be developed with data collected from sites on the base where pesticides were not handled or disposed and thus only received routine aerial pesticide application.

Navy Response: The results of the SI, as presented in the UFP-SAP, show that the source of contamination at AOC 8 is the buried debris (wood, concrete, glass, plexiglass, various metal debris, and construction debris). There is no evidence that pesticides were ever handled or disposed of at AOC 8. Therefore, any pesticide detections in soil at AOC 8 are likely the result of routine, aerial pesticide

applications. However, during the March 28, 2013 conference call, the CAX Partnering Team agreed to no longer use a pesticide threshold value to determine whether or not site pesticide detections are a result of routine pesticide applications. As a result, all detections of pesticides will be evaluated in the RI and human health and ecological risk assessments. All references to the 50 µg/kg basewide pesticide threshold value were removed from the SAP.

DVR \\MNUSTRICTGFS01\PROJECTS\USNAVFACENGCOM405450\CHEATHAMANNEX\MAPFILES\388429_AOC8_UFPSAP\FIGURE 1 - PROPOSED SAMPLE CHANGES.MXD JCROCKETT 3/29/2013 7:57:39 AM

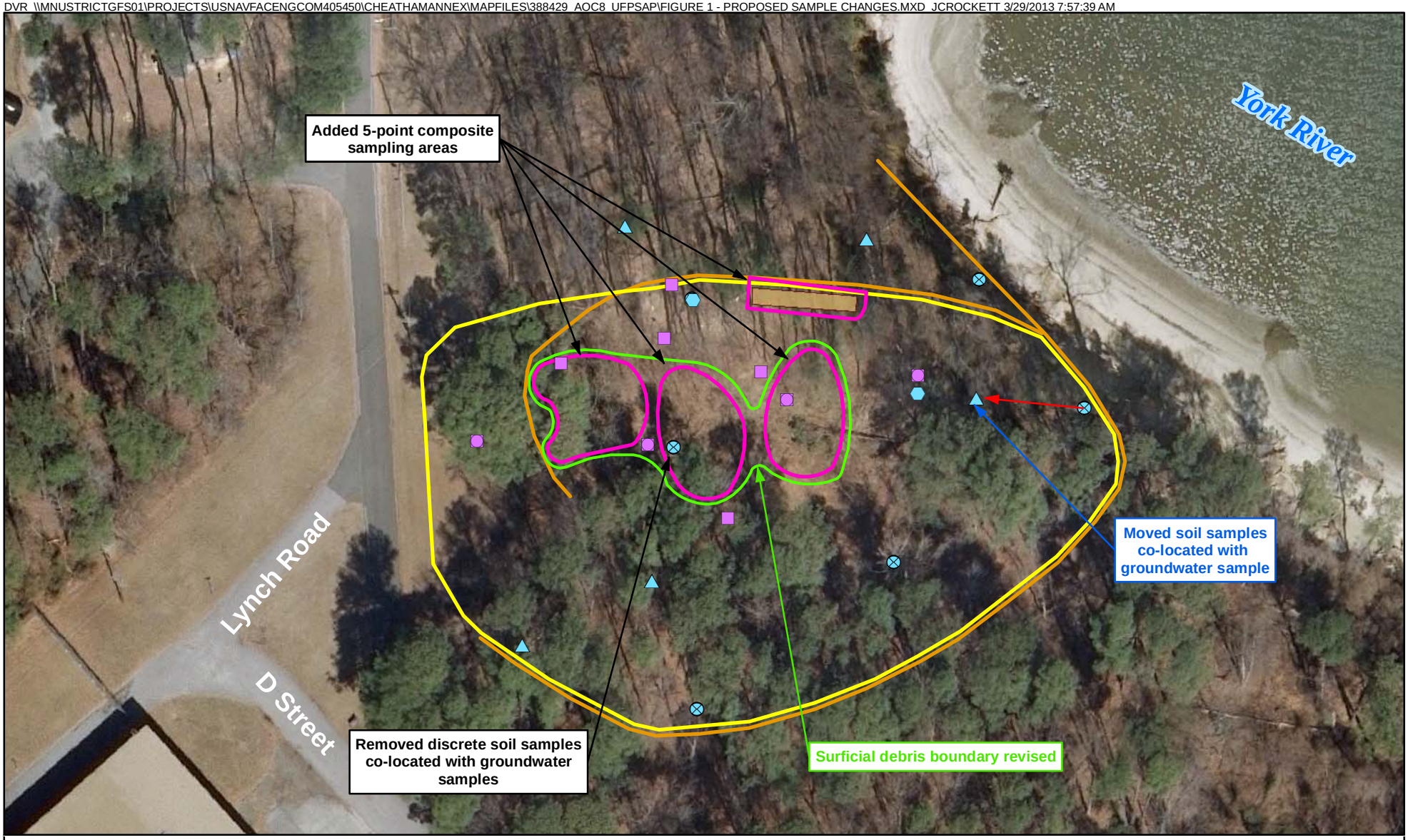

Legend

- Proposed Surface Soil Samples (for Hexavalent Chromium Analysis)
- Proposed Surface/Subsurface Soil Samples
- Proposed Surface/Subsurface Soil Samples Co-Located with Groundwater Samples
- Soil Sample Location (2008 SI)
- Groundwater/Soil Sample Location (2008 SI)
- Approximate Location of Berm
- Approximate AOC 8 Study Area
- Observed Surficial Debris
- Approximate Location of Visible Debris within the Side Berm
- 5 Point Composite Sampling Areas

N W E S

0 35 70 Feet

Figure 1
Proposed Sample Changes
AOC 8 Remedial Investigation UFP-SAP RTCs
Cheatham Annex
Williamsburg, Virginia

CH2MHILL

Photo 1: View of the east side of the berm, facing North.

Photo 2: View of the edge of the cliff from the top of the berm in the middle of the AOC 8 eastern site boundary.

Photo 3: View of the east side of the berm, facing South.

Photo 4: View of the area surrounding AOC 8, facing southeast. Photo taken from the top of the berm with the edge of the berm behind the photographer.

Photo 5: View of AOC 8, facing northwest. Photo taken from the top of the berm, from the same location as Photo 4, above.

DVR \\MNUSTRICTGFS01\PROJECTS\USNAVFACENGCOM405450\CHEATHAMANNEX\MAPFILES\388429_AOC8_UFPSAP\FIGURE 2 - AOC8 SITE MAP.MXD BHATHAWAY 12/7/2012 7:13:04 AM

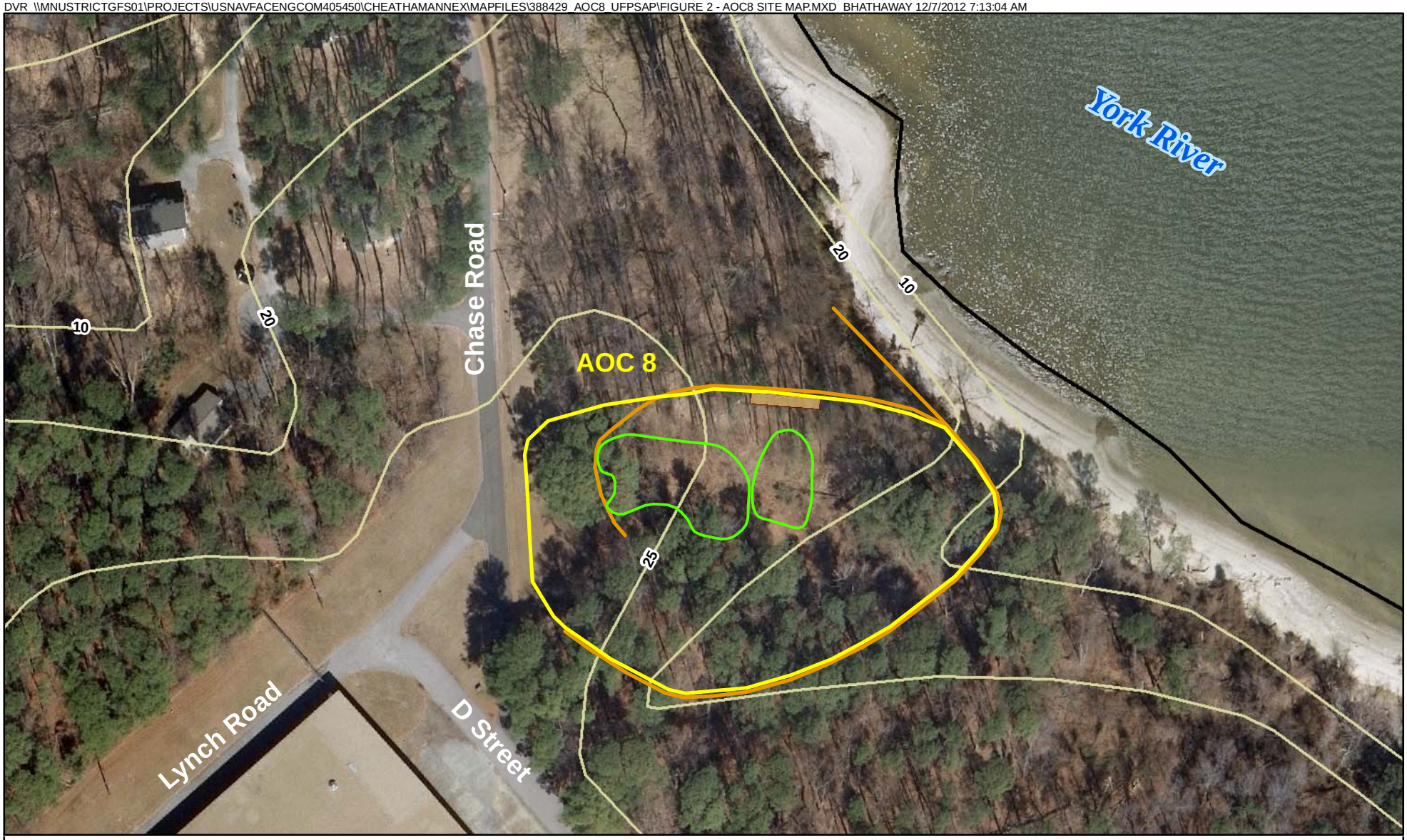

Legend

- Approximate AOC 8 Study Area
- CAX Boundary
- Observed Surficial Debris
- Approximate Location of Visible Debris within the Side Berm
- Approximate Location of Berm
- Topographic Surface Contour (feet above mean sea level)

N
W E
S

0 40 80
Feet

Figure 2
AOC 8 Site Map
AOC 8 Remedial Investigation UFP-SAP
Cheatham Annex
Williamsburg, Virginia

CH2MHILL

UNITED STATES ENVIRONMENTAL PROTECTION AGENCY
REGION III
1650 Arch Street
Philadelphia, Pennsylvania 19103-2029

May 30, 2013

Mr. Scott Park
NAVFAC MIDLANT, Building N-26, Room 3208
Attention: Code OPHE3, Mr. Scott Park
9742 Maryland Avenue
Norfolk, VA 23511-3095

Subject: Round 2 Response to Comments, Remedial Investigation, Sampling and Analysis Plan, AOC 8 – Area South of Site 7, Naval Weapons Station Yorktown Cheatham Annex, Williamsburg, Virginia, April 9, 2013

Mr. Park:

Thank you for the opportunity to review the subject document. One response requires further discussion. All other comments are acceptable.

EPA comment 5 stated that the initial and final COPCs for plants and invertebrates need to be based on maximum concentrations, not mean concentrations. The RTC states that in Step 3A, central tendency exposure point concentrations (mean and 95% UCL) will be a primary consideration in determining if a chemical should be identified as a COPC. The RTC goes on to indicate that other factors (e.g., magnitude of the maximum HQ and spatial pattern of screening value exceedances) will also be considered when making this determination. While central tendency concentrations can be considered as part of Step 3A, risk to plants and invertebrates should not be eliminated based on this comparison alone. Because these receptors have no or limited mobility, more emphasis should be placed on 95% UCL and maximum concentrations and the spatial pattern of screening value exceedances when determining what chemicals should be COPCs.

If you have any questions, please contact me at 215-814-3394.

Sincerely,

Susanne Haug, P.E.
NPL/BRAC Federal Facilities Branch

cc: Wade Smith, VDEQ

Round 3 Response to Comments
Remedial Investigation
Sampling and Analysis Plan
AOC 8 – Area South of Site 7
Naval Weapons Station Yorktown Cheatham Annex
Williamsburg, VA
June 3, 2013

Comments received by email on May 30, 2013 from Susanne Haug, Environmental Protection Agency, Region 3.

EPA Comment #1: EPA comment 5 stated that the initial and final COPCs for plants and invertebrates need to be based on maximum concentrations, not mean concentrations. The RTC states that in Step 3A, central tendency exposure point concentrations (mean and 95% UCL) will be a primary consideration in determining if a chemical should be identified as a COPC. The RTC goes on to indicate that other factors (e.g., magnitude of the maximum HQ and spatial pattern of screening value exceedances) will also be considered when making this determination. While central tendency concentrations can be considered as part of Step 3A, risk to plants and invertebrates should not be eliminated based on this comparison alone. Because these receptors have no or limited mobility, more emphasis should be placed on 95% UCL and maximum concentrations and the spatial pattern of screening value exceedances when determining what chemicals should be COPCs.

Navy Response: Comment noted. A draft AOC 8 RI Report will be submitted to the EPA for review prior to finalization. During their review of the draft RI Report, the EPA can provide comments on the method used to eliminate COPCs. No changes were made to the SAP.

UNITED STATES ENVIRONMENTAL PROTECTION AGENCY
REGION III
1650 Arch Street
Philadelphia, Pennsylvania 19103-2029

June 21, 2013

Mr. Scott Park
NAVFAC MIDLANT, Building N-26, Room 3208
Attention: Code OPHE3, Mr. Scott Park
9742 Maryland Avenue
Norfolk, VA 23511-3095

Subject: Round 3 Response to Comments, Remedial Investigation, Sampling and Analysis Plan, AOC 8 – Area South of Site 7, Naval Weapons Station Yorktown Cheatham Annex, Williamsburg, Virginia, June 3, 2013

Mr. Park:

Thank you for the opportunity to review the subject document. We disagree with the response and how the Navy proposes to determine what chemicals should be COPCs. However, you may move forward as you planned and the EPA will do our own analysis and revisit this issue during our review of the Remedial Investigation Report.

If you have any questions, please contact me at 215-814-3394.

Sincerely,

Susanne Haug, P.E.
NPL/BRAC Federal Facilities Branch

cc: Wade Smith, VDEQ

Regulatory Acceptance

COMMONWEALTH of VIRGINIA

DEPARTMENT OF ENVIRONMENTAL QUALITY
Street address: 629 East Main Street, Richmond, Virginia 23219
Mailing address: P.O. Box 1105, Richmond, Virginia 23218
TDD (804) 698-4021
www.deq.virginia.gov

Douglas W. Domenech
Secretary of Natural Resources

David K. Paylor
Director

(804) 698-4000
1-800-592-5482

June 18, 2013

Mr. Scott Park
NAVFAC MIDLANT, Building N-26
Hampton Roads Restoration Product Line, Code OPHREV4
9742 Maryland Avenue
Norfolk, VA 23511-3095

Tier II Sampling and Analysis Plan
AOC 8 – Area South of Site 7
Naval Weapons Station Yorktown
Cheatham Annex
Williamsburg, Virginia

Dear Mr. Park:

The Virginia Department of Environmental Quality (DEQ) has received the *Draft Final Tier II Sampling and Analysis Plan* (SAP) for AOC 8 at Naval Weapons Station Yorktown, Cheatham Annex (CAX), Williamsburg, Virginia. The SAP, prepared by CH2M HILL, was received by the DEQ (electronically) on June 3, 2013.

Thank you for providing the DEQ's Office of Remediation Programs the opportunity to review the above-referenced SAP. Subsequent to DEQ's internal review, this office concurs with the proposed text revisions and recommends submittal of the *Final Tier II Sampling and Analysis Plan*.

Please contact me at (804) 698-4125 or wade.smith@deq.virginia.gov with any additional questions.

Sincerely,

Wade M. Smith
Remediation Project Manager
Office of Remediation Programs

cc: Susanne Haug, EPA

UNITED STATES ENVIRONMENTAL PROTECTION AGENCY
REGION III
1650 Arch Street
Philadelphia, Pennsylvania 19103-2029

June 28, 2013

Mr. Scott Park
NAVFAC MIDLANT, Building N-26, Room 3208
Attention: Code OPHE3, Mr. Scott Park
9742 Maryland Avenue
Norfolk, VA 23511-3095

Subject: Round 3 Response to Comments, Remedial Investigation, Sampling and Analysis Plan, AOC 8 – Area South of Site 7, Naval Weapons Station Yorktown Cheatham Annex, Williamsburg, Virginia, June 3, 2013

Mr. Park:

The U.S. Environmental Protection Agency (EPA) has reviewed the response to the remaining comment and the latest version of the Sampling and Analysis Plan for AOC 8 – Area South of Site 7. Although we disagree with the response to the comment we accept the report. This acceptance should not be construed as an acceptance of the Navy's proposal on how COPCs will be determined. The Navy can move forward as planned and the EPA will do its own analysis and revisit this issue during our review of the Remedial Investigation Report

If you have any questions, please contact me at 215-814-3394.

Sincerely,

Susanne Haug, P.E.
NPL/BRAC Federal Facilities Branch

cc: Wade Smith, VDEQ