N60200.AR.002313
NAS CECIL FIELD, FL
5090.3a

LETTER OF TRANSMITTAL AND CHANGE PAGES FOR FINAL STATUS SURVEY FOR YELLOW WATER WEAPONS COMPOUND NAS CECIL FIELD FL
2/17/2000
BECHTEL ENVIRONMENTAL INC

015623-3

FEB 17 2000

Commanding Officer
Department of Navy, Southern Division
Naval Facilities Engineering Command
Attention: Mark Davidson
2155 Eagle Drive, P.O. Box 190010
North Charleston, SC 29419-9010

SUBJECT: Bechtel Job No. 22567
Department of the Navy Contract No. N62467-93-D-0936
DO#0043, YELLOW WATER WEAPONS COMPOUND, NAS CECIL FIELD
FINAL STATUS SURVEY
File Code: 5090

Dear Mr. Davidson:

Enclosed is the final cover for *Final Status Survey for the Yellow Water Weapons Compound, NAS Cecil Field.* This cover is being distributed in accordance with your direction (see copies list below for recipients). Please replace cover Rev. 0 dated March 1999 with this cover. Should you have any questions, please do not hesitate to call me at (904) 771-5314.

Sincerely,

for Les Landis

V. H. Bauer
Project Manager

JM:pw:Lr1990

Enclosure: Cover for *Final Status Survey for the Yellow Water Weapons Compound, NAS Cecil Field, Rev. 0,* dated February 2000.

cc: w/enclosure
Mr. Richard Buttons, EPA, Region IV
Mr. Harlan Keaton, Florida Bureau of Radiation Control
Mr. Troy Blanton, Naval Sea Systems Command Detachment, RASO
Ms. Abby Wilcox, Tetra Tech NUS
Mr. Mike Deliz, Florida Department of Environmental Protection
Ms. Debbie Vaughn-Wright
Mr. Dave Kruziki, NAS Cecil Field

FINAL STATUS SURVEY
FOR THE
YELLOW WATER WEAPONS COMPOUND
NAVAL AIR STATION CECIL FIELD
DELIVERY ORDER No. 0043

Prepared for

SOUTHERN DIVISION of the NAVAL FACILITIES

ENGINEERING COMMAND

Contract No. N62467-93-D-0936

FEBRUARY 2000

REVISION 0

Prepared by

BECHTEL ENVIRONMENTAL, INC.

OAK RIDGE, TENNESSEE

BECHTEL JOB NO. 22567

Z8.16 1143

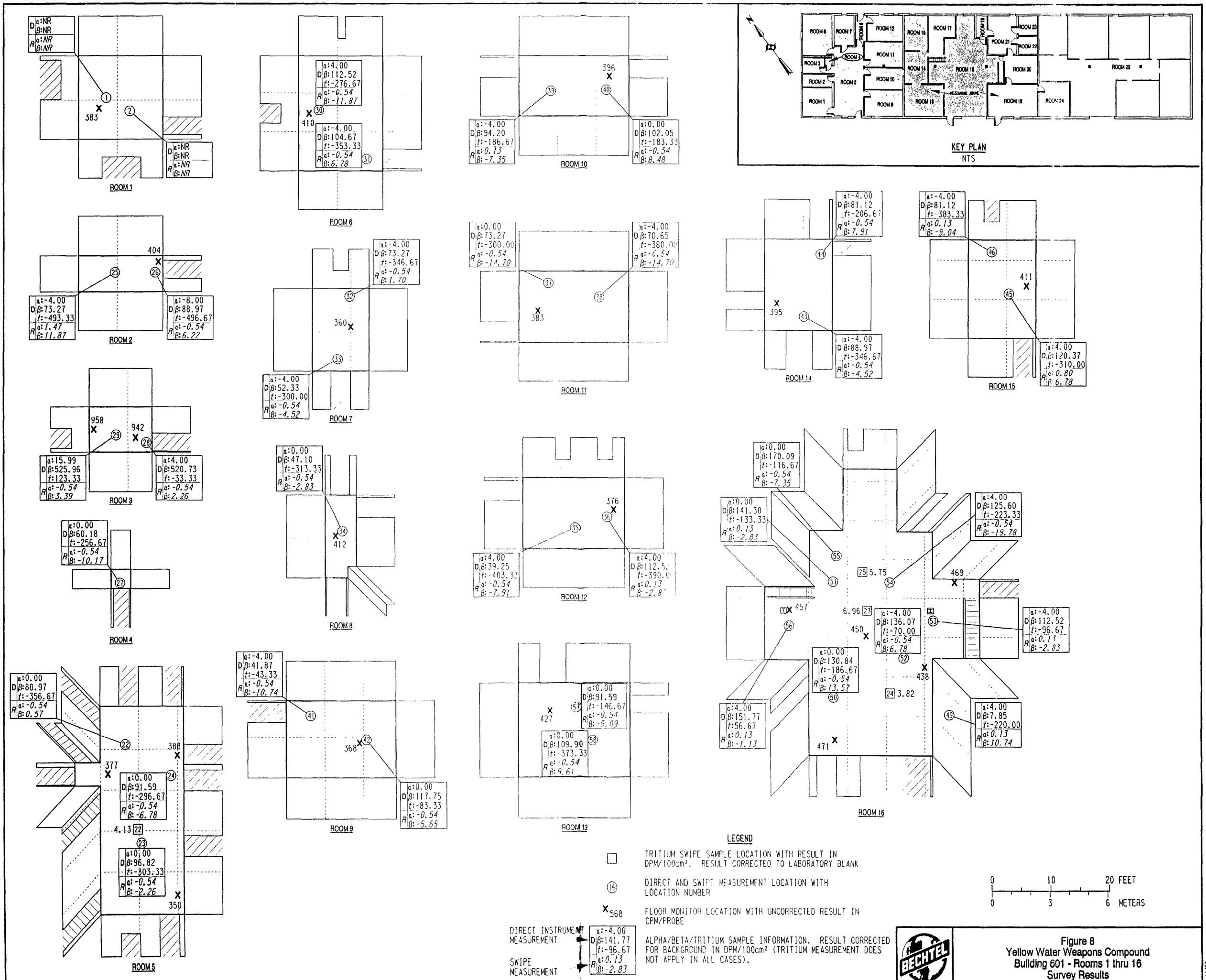

Figure 8
Yellow Water Weapons Compound
Building 601 - Rooms 1 thru 16
Survey Results

REV 11/97

C4143.1 I BIX

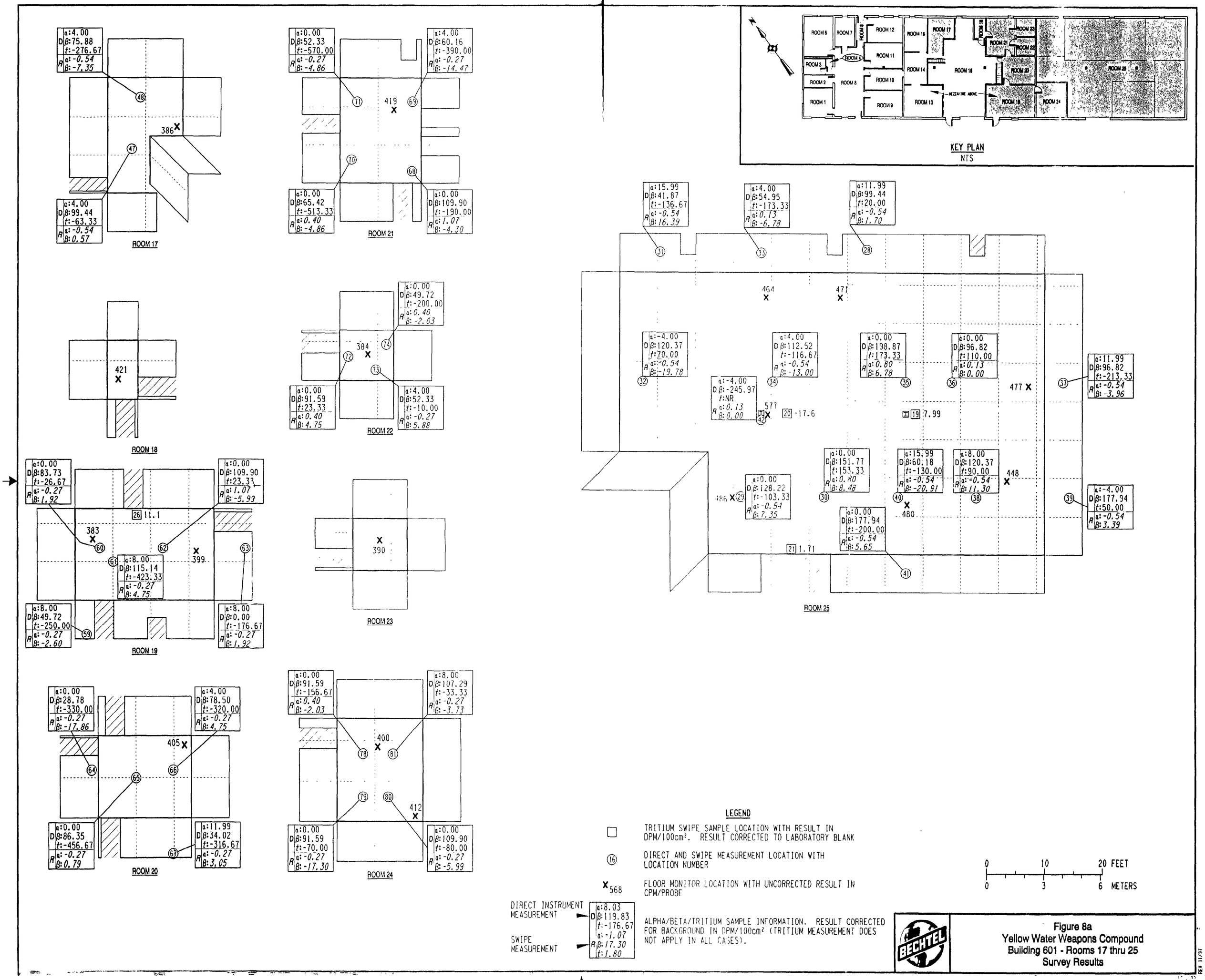

Figure 8a
Yellow Water Weapons Compound
Building 601 - Rooms 17 thru 25
Survey Results

REV 11/97

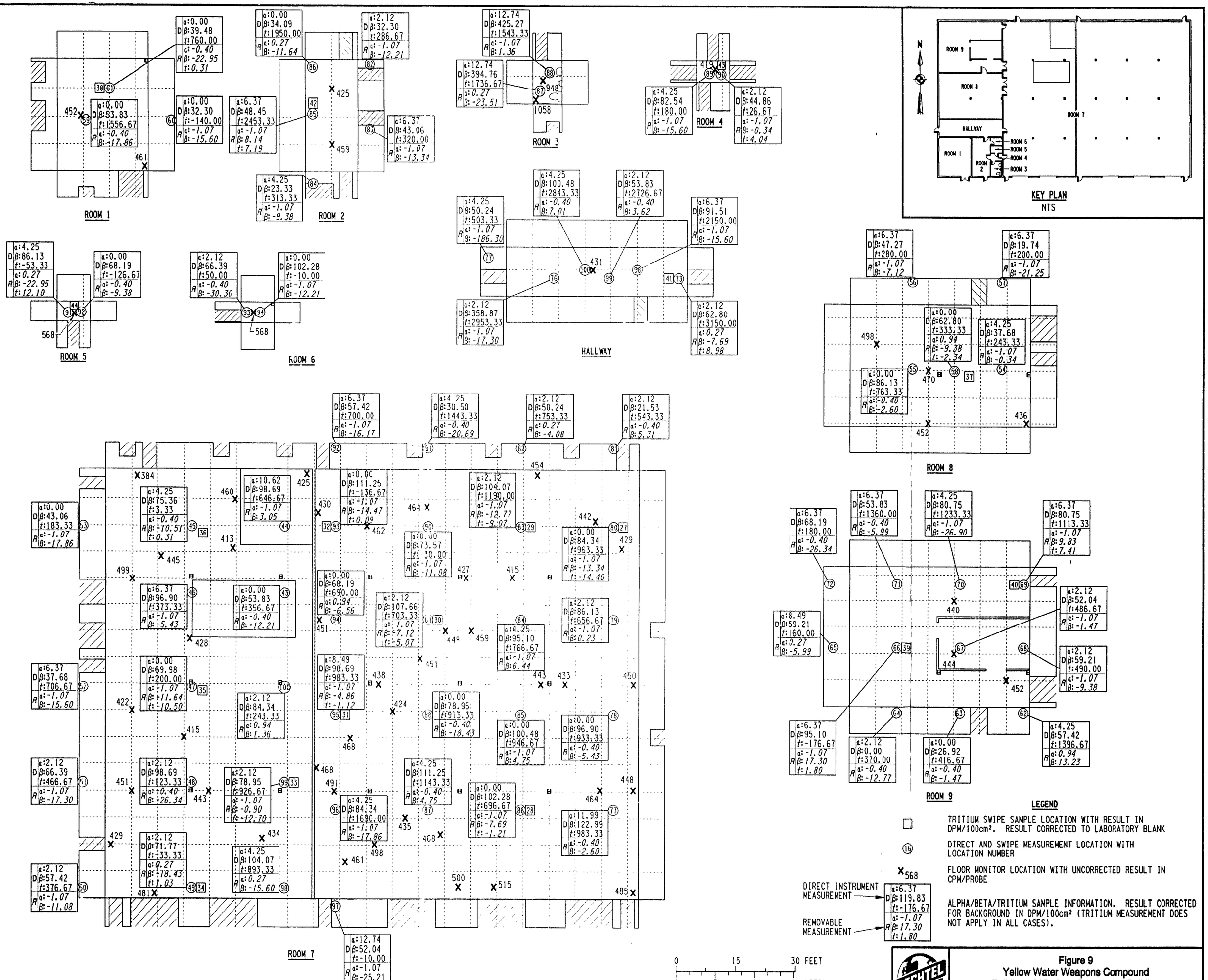

Figure 9
Yellow Water Weapons Compound
Buildings 617 - Inert Processing Building
Survey Results

REV 11/97

17 x 22

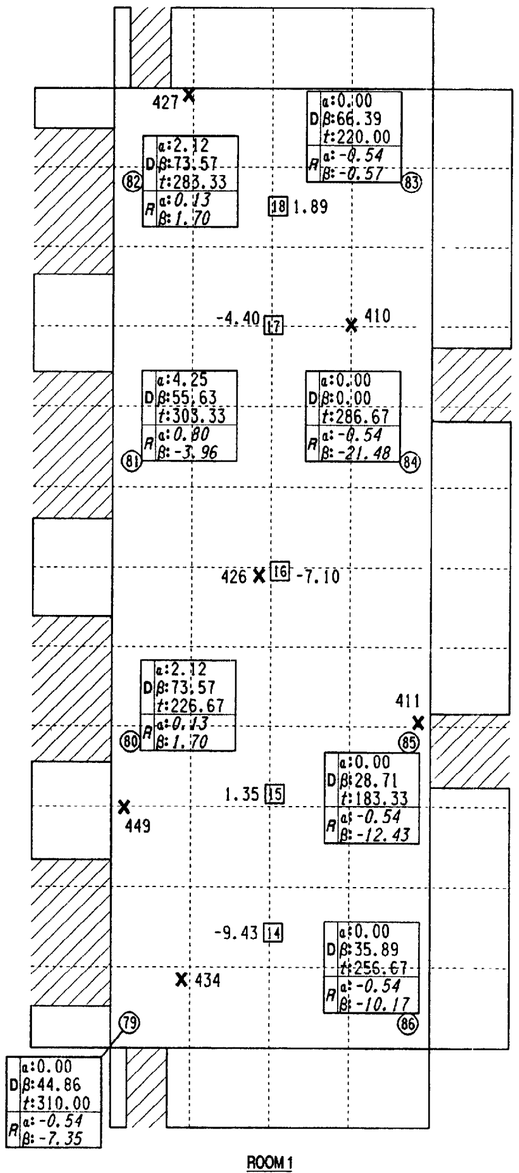

ROOM 1

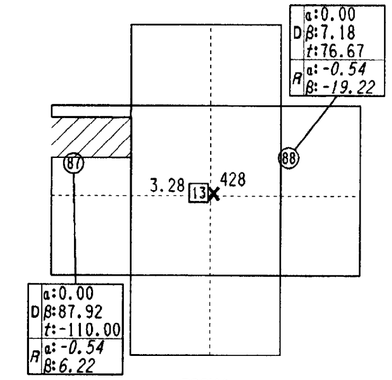

ROOM 3

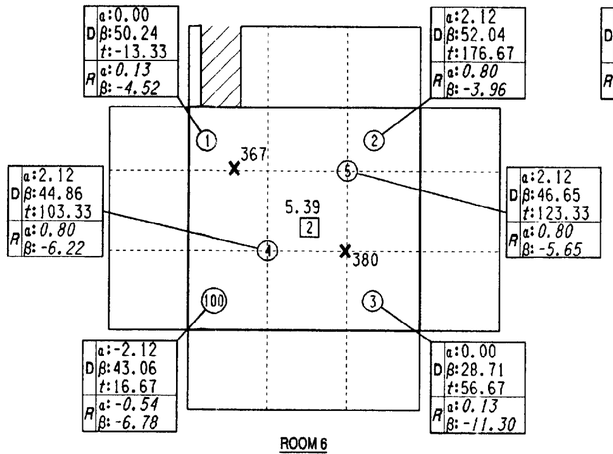

ROOM 6

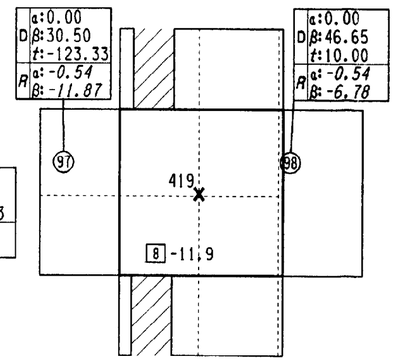

ROOM 9

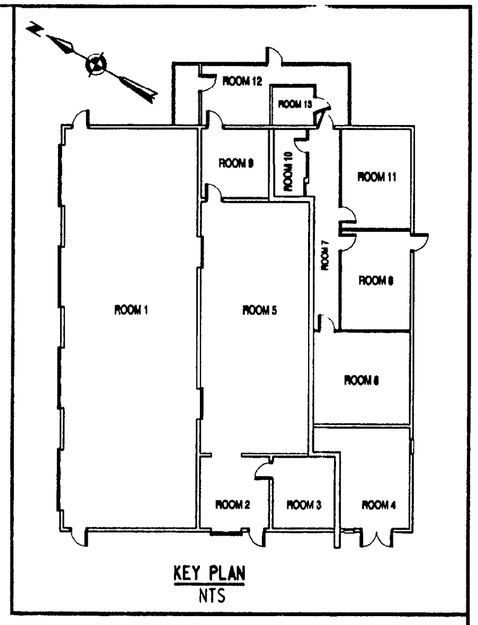

KEY PLAN
NTS

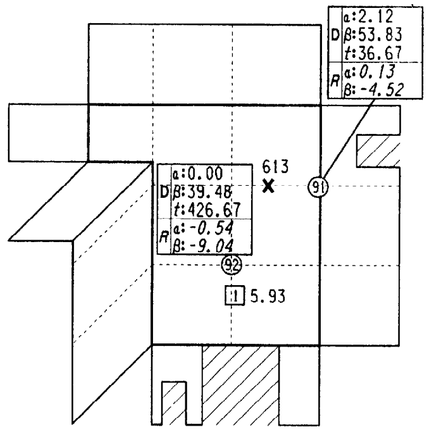

ROOM 4

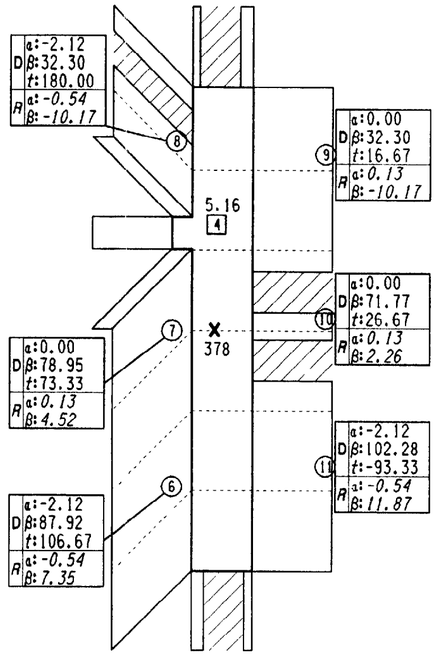

ROOM 7

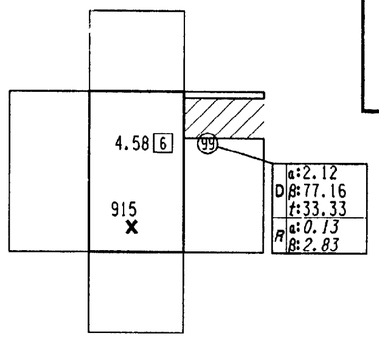

ROOM 10

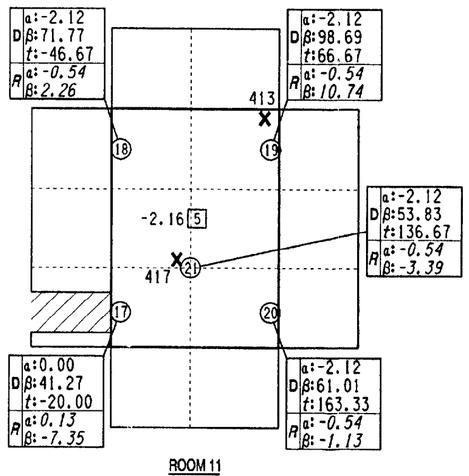

ROOM 11

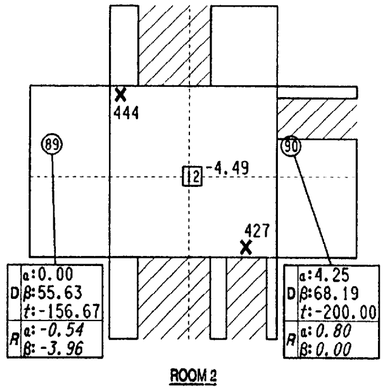

ROOM 2

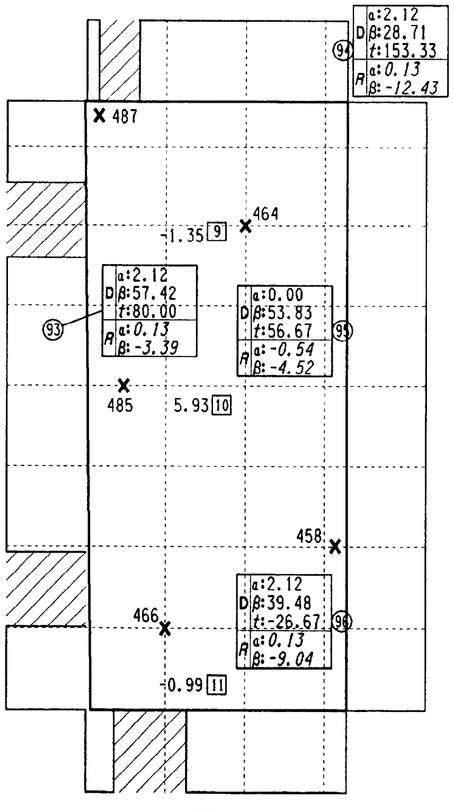

ROOM 5

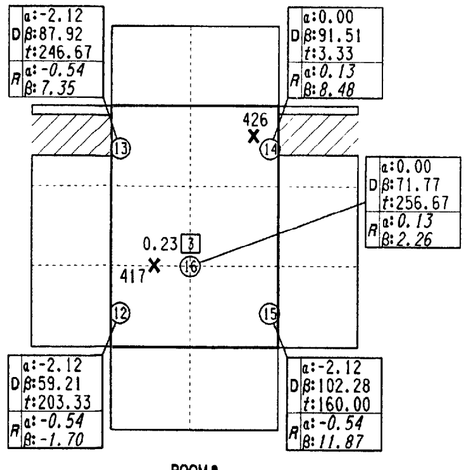

ROOM 8

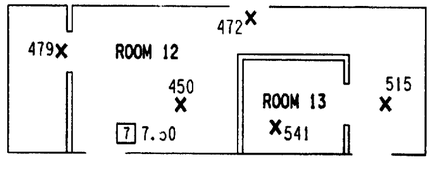

ROOM 12 AND 13

LEGEND

□ TRITIUM SWIPE SAMPLE LOCATION WITH RESULT IN DPM/100cm². RESULT CORRECTED TO LABORATORY BLANK

(16) DIRECT AND SWIPE MEASUREMENT LOCATION WITH LOCATION NUMBER

×568 FLOOR MONITOR LOCATION WITH UNCORRECTED RESULT IN CPM/PROBE

DIRECT INSTRUMENT MEASUREMENT → α:-2.12 Dβ:128.87 t:160.00
SWIPE MEASUREMENT → Rα:-0.54 β:11.87

ALPHA/BETA/TRITIUM SAMPLE INFORMATION. RESULT CORRECTED FOR BACKGROUND IN DPM/100cm² (TRITIUM MEASUREMENT DOES NOT APPLY IN ALL CASES).

0 10 20 FEET
0 3 6 METERS

BECHTEL

Figure 10
Yellow Water Weapons Compound
Building 626
Survey Results

REV 11/97

LEGEND

- □ TRITIUM SWIPE SAMPLE LOCATION WITH RESULT IN DPM/100cm². RESULT CORRECTED TO LABORATORY BLANK
- (16) DIRECT AND SWIPE MEASUREMENT LOCATION WITH LOCATION NUMBER
- ×568 FLOOR MONITOR LOCATION WITH UNCORRECTED RESULT IN CPM/PROBE
- DIRECT INSTRUMENT MEASUREMENT — D α: 4.18 β: 133.1; SWIPE MEASUREMENT — R α: -0.27 β: -8.37 — ALPHA/BETA/TRITIUM SAMPLE INFORMATION. RESULT CORRECTED FOR BACKGROUND IN DPM/100cm² (TRITIUM MEASUREMENT DOES NOT APPLY IN ALL CASES).
- AREAS RANDOMLY CHOSEN FOR EACH BUILDING UPON WORK PLAN RECOMMENDED FREQUENCIES

NOTES

1. TRITIUM SWIPES TAKEN EVERY OTHER BUILDING. DIRECT MEASUREMENTS MADE WITHIN EACH BUILDING. SAMPLES AND MEASUREMENTS MADE IMMEDIATELY INSIDE ENTRANCE TO BUILDING.
2. FLOOR MONITOR MEASUREMENTS MADE AT RANDOM LOCATIONS WITHIN BUILDINGS.
3. NA - NOT APPLICABLE (TRITIUM SWIPES NOT TAKEN IN ODD NUMBERED BUILDINGS).

0 20 40 FEET
0 3 6 9 12 METERS

BECHTEL

Figure 11
Yellow Water Weapons Compound
Buildings 650 thru 670 - Weapons Storage Magazines
Survey Results

REV 11/97

0:\22567\296\296F122.DGN
18 MAR 1999

17 x 22

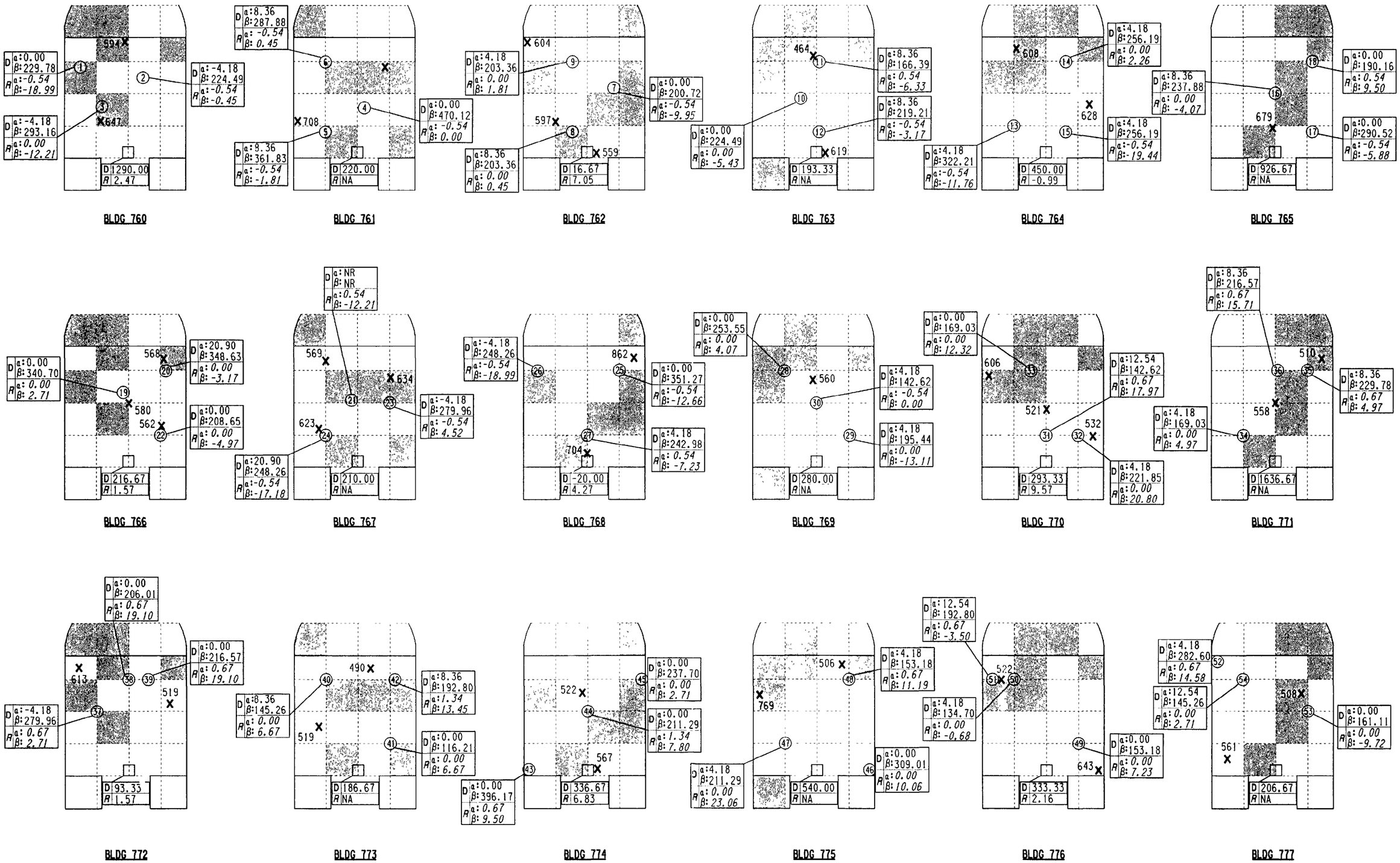

LEGEND

- □ TRITIUM SWIPE SAMPLE LOCATION WITH RESULT IN DPM/100cm². RESULT CORRECTED TO LABORATORY BLANK
- (16) DIRECT AND SWIPE MEASUREMENT LOCATION WITH LOCATION NUMBER
- ×568 FLOOR MONITOR LOCATION WITH UNCORRECTED RESULT IN CPM/PROBE
- DIRECT INSTRUMENT MEASUREMENT → D α:4.18 β:133.1; SWIPE MEASUREMENT → R α:-0.27 β:-8.37 — ALPHA/BETA/TRITIUM SAMPLE INFORMATION. RESULT CORRECTED FOR BACKGROUND IN DPM/100cm² (TRITIUM MEASUREMENT DOES NOT APPLY IN ALL CASES).
- AREAS RANDOMLY CHOSEN FOR EACH BUILDING UPON WORK PLAN RECOMMENDED FREQUENCIES

NOTES

1. TRITIUM SWIPES TAKEN EVERY OTHER BUILDING. DIRECT MEASUREMENTS MADE WITHIN EACH BUILDING. SAMPLES AND MEASUREMENTS MADE IMMEDIATELY INSIDE ENTRANCE TO BUILDING.
2. FLOOR MONITOR MEASUREMENTS MADE AT RANDOM LOCATIONS WITHIN BUILDINGS.
3. NA - NOT APPLICABLE (TRITIUM SWIPES NOT TAKEN IN ODD NUMBERED BUILDINGS).
4. NR - NOT RECORDED.

0 15 30 FEET
0 3 6 9 METERS

BECHTEL

Figure 12
Yellow Water Weapons Compound
Buildings 760 thru 777 - Weapons Storage Magazines
Survey Results

REV 11/97

17 x 22

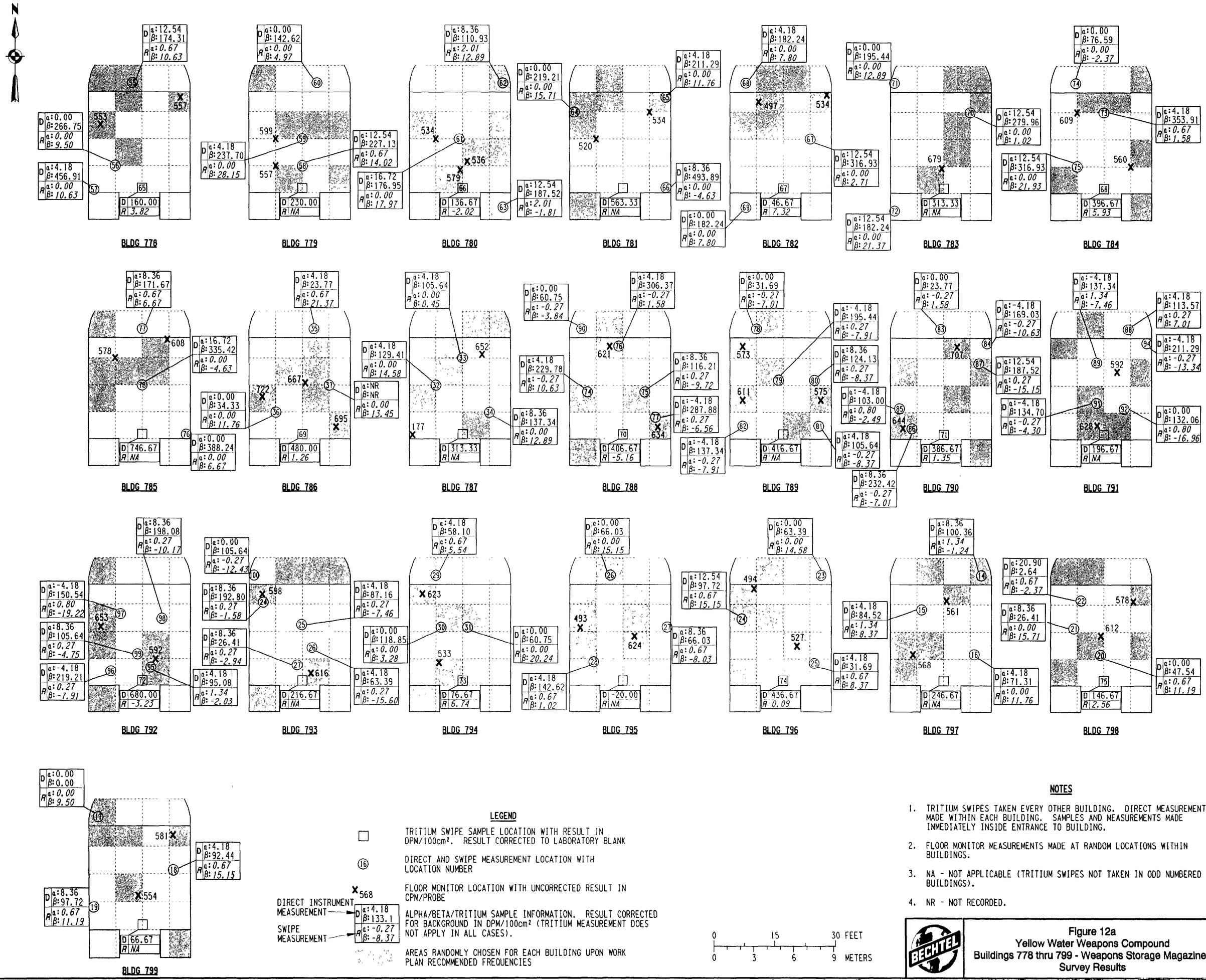

NOTES

1. TRITIUM SWIPES TAKEN EVERY OTHER BUILDING. DIRECT MEASUREMENTS MADE WITHIN EACH BUILDING. SAMPLES AND MEASUREMENTS MADE IMMEDIATELY INSIDE ENTRANCE TO BUILDING.
2. FLOOR MONITOR MEASUREMENTS MADE AT RANDOM LOCATIONS WITHIN BUILDINGS.
3. NA - NOT APPLICABLE (TRITIUM SWIPES NOT TAKEN IN ODD NUMBERED BUILDINGS).
4. NR - NOT RECORDED.

BECHTEL

Figure 12a
Yellow Water Weapons Compound
Buildings 778 thru 799 - Weapons Storage Magazines
Survey Results

REV 11/97