N60200.AR.000708
NAS CECIL FIELD, FL
5090.3a

STORAGE TANK CLOSURE ASSESSMENT FORM FOR FIELD ENLISTED HOUSING UNIT 429 WITH ATTACHMENTS NAS CECIL FIELD FL
7/10/1995
INNOVATIVE SERVICES INTERNATIONAL

Florida Department of Environmental Regulation
Twin Towers Office Bldg. • 2600 Blair Stone Road • Tallahassee, Florida 32399-2400

DER Form # 17-761.900(4)
Form Title Closure Assessment Form
Effective Date December 10, 1990
DER Application No. _____ (if issued by DER)

Closure Assessment Form

Owners of storage tank systems that are replacing, removing or closing in place storage tanks shall use this form to demonstrate that a storage system closure assesment was performed in accordance with Rule 17-761 or 17-762, Florida Administrative Code. Eligible Early Detection Incentive (EDI) and Reimbursement Program sites do not have to perform a closure assessment.

Please Print or Type
Complete All Applicable Blanks

1. Date: July 10, 1995
2. DER Facility ID Number: N/A 3. County: Duval
4. Facility Name: Naval Air Station - Cecil Field Enlisted Housing Unit # 429
5. Facility Owner: U.S. Navy
6. Facility Address: Naval Air Station - Cecil Field
7. Mailing Address: Naval Air Station - Cecil Field
8. Telephone Number: (_____) _____ 9. Facility Operator: U.S. Navy
10. Are the Storage Tank(s): **(Circle one or both)** A. Aboveground or XB. Underground
11. Type of Product(s) Stored: #2 Heating Oil
12. Were the Tank(s): **(Circle one)** A. Replaced XB. Removed C. Closed in Place D. Upgraded (aboveground tanks only)
13. Number of Tanks Closed: One (1) 14. Age of Tanks: Unknown

Facility Assessment Information

Yes	No	Not Applicable	
☐	☒		1. Is the facility participating in the Florida Petroleum Liability Insurance and Restoration Program (FPLIRP)?
☐	☒		2. Was a Discharge Reporting Form submitted to the Department? If yes, When: _____ Where: _____
☒	☐		3. Is the depth to ground water less than 20 feet?
☐	☒	☐	4. Are monitoring wells present around the storage system? If yes, specify type: ☐ Water monitoring ☐ Vapor monitoring
☐	☒	☐	5. Is there free product present in the monitoring wells or within the excavation?
☐	☐	☒	6. Were the petroleum hydrocarbon vapor levels in the soils greater than 500 parts per million for gasoline? Specify sample type: ☐ Vapor Monitoring wells ☐ Soil sample(s)
☐	☒	☐	7. Were the petroleum hydrocarbon vapor levels in the soils greater than 50 parts per million for diesel/kerosene? Specify sample type: ☐ Vapor Monitoring wells ☒ Soil sample(s)
☐	☒	☐	8. Were the analytical laboratory results of the ground water sample(s) greater than the allowable state target levels? (See target levels on reverse side of this form and supply laboratory data sheets)
☐	☐	☒	9. If a used oil storage system, did a visual inspection detect any discolored soil indicating a release?
☐	☒		10. Are any potable wells located within ¼ of a mile radius of the facility?
☐	☒		11. Is there a surface water body within ¼ mile radius of the site? If yes, indicate distance: _____

12. A detailed drawing or sketch of the facility that includes the storage system location, monitoring wells, buildings, storm drains, sample locatior and dispenser locations must accompany this form.
13. If a facility has a pollutant storage tank system that has both gasoline and kerosene/diesel stored on site, both EPA Method 602 and EPA Meihc 610 must be performed on the ground water samples obtained.
14. Amount of soils removed and receipt of proper disposal.
15. If yes is answered to any one of questions 5-9, a Discharge Reporting Form 17-761.900(1) indicating a suspected release shall be submitte to the Department within one working day.
16. A copy of this form and any attachments must be submitted to the Department's district office in your area and to the locally administered pr gram office under contract with the Department within 60 days of completion of tank removal or filling a tank with an inert material.

Signature of Owner	Date
Signature of Person Performing Assessment	7/11/95 Date
Professional Geologist Title of Person Performing Assessment	

State Ground Water Target Levels That Affect A Pollutant Storage Tank System Closure Assessment

State ground water target levels are as follows:

1. For gasoline (EPA Method 602):
   a. Benzene — 1 ug/l
   b. Total VOA — 50 ug/l
      - Benzene
      - Toluene
      - Total Xylenes
      - Ethylbenzene
   c. Methyl Test-Butyl Ether (MTBE) — 50 ug/l
2. For kerosene/diesel (EPA Method 610):
   a. Polynuclear Aromatic Hydrocarbons (PAHS) (Best achievable detection limit, 10 ug/l maximum)

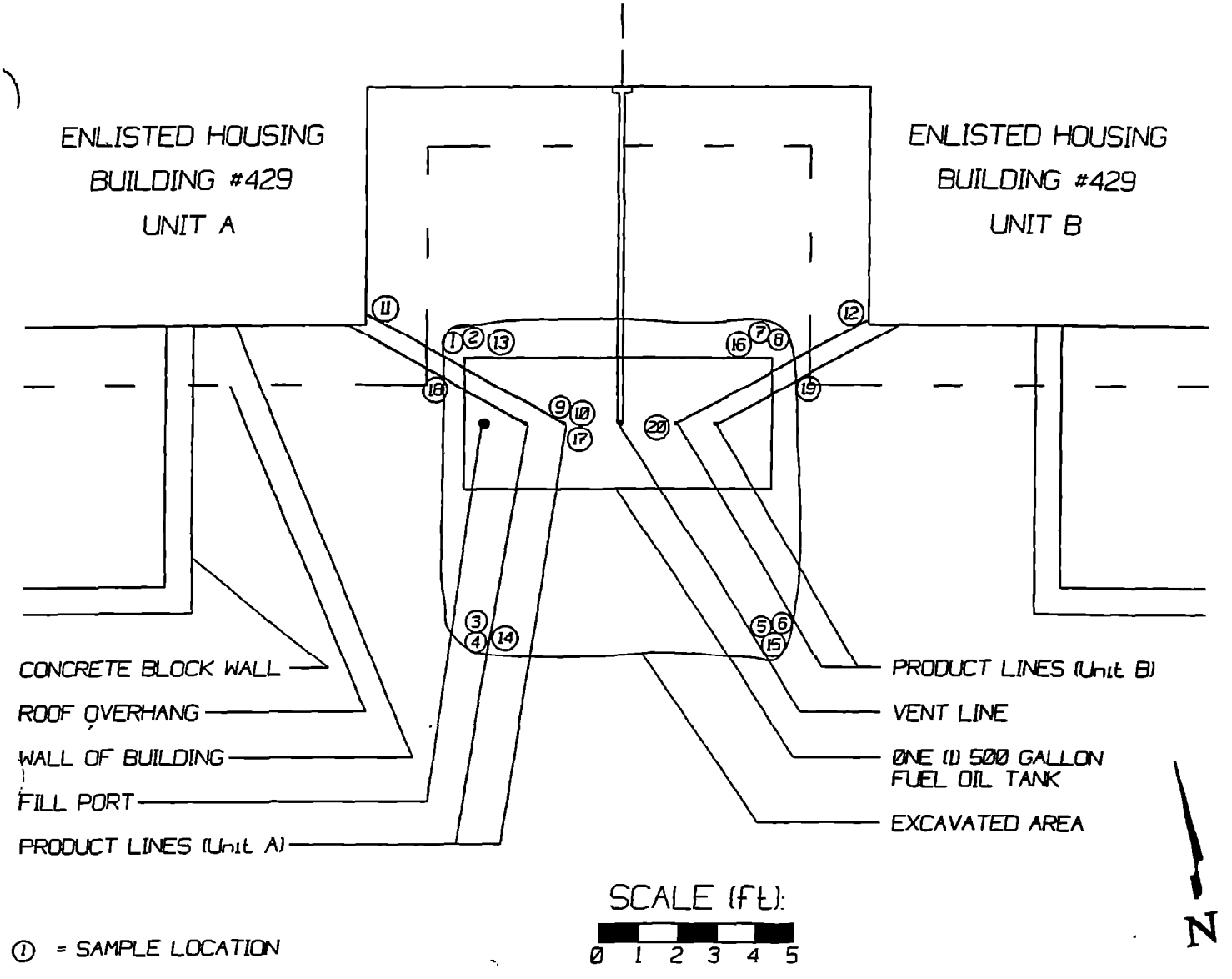

SAMPLE NO.	HC READING	DEPTH	SAMPLE NO.	HC READING	DEPTH
1	0.0	1'	11	0.0	1'
2	0.0	2'	12	0.0	1'
3	0.0	1'	13	0.0	2.5'
4	0.0	2'	14	0.0	2.5'
5	0.0	1'	15	0.0	2.5'
6	0.0	2'	16	0.0	2.5'
7	0.0	1'	17	0.0	2.5'
8	0.0	2'	18	0.0	1'
9	0.0	1'	19	0.0	1'
10	0.0	2'	20	0.0	2.5

ALL SAMPLES ANALYZED WITH A THERMO ENVIRONMENTAL INSTRUMENTS MODEL 580B PHOTOIONIZATION DETECTOR.

INNOVATIVE
SERVICES
INTERNATIONAL, INC.

SITE PLAN

ENLISTED HOUSING UNIT #429

NAVAL AIR STATION
CECIL FIELD
JACKSONVILLE, FLORIDA

Geological Environmental and Oceanographic Sciences, Inc.

1057 North Ellis Road, Suite 17
Jacksonville, Florida 32254
(904) 786-8340
(800) 486-6755
(904) 786-6799 Fax

Water
Soil
Air
Analysis and Consulting

Geos Inc.

ISI100014396
Attn: RON BOARDMAN

P.O. BOX 150016
NAS CECIL FIELD, FL
32215

RECEIVED
JUN 9 1995

Page 1
5 Jun 1995
Report J5-05-262-01
LAB ID. 82223/E82101

Sample Description:
CECIL FIELD N.A.S. / ENLISTED HOUSING
#429 TEMPWELL
GROUNDWATER

SAMPLE ID.: ENL-429-595
COLLECTED: 05/26/95 13:38
RECEIVED: 05/26/95
COLLECTED BY: S.W. VOCKELL

Parameter	Result		Units	Method	Det. Limit	Extracted	Analyzed	Analyst
Hydrocarbons, Total IR	<0.200		mg/L	418.1	0.200	06/01/95	06/02/95	AM
Lead, Total	0.099		mg/L	239.2	0.005	05/30/95	06/02/95	JC
Polynuclear Aromatics				625\8270				
Naphthalene	BDL		µg/L		10	05/31/95	06/01/95	AT
Acenaphthylene	BDL		µg/L		10	05/31/95	06/01/95	AT
1-Methylnaphthalene	BDL		µg/L		10	05/31/95	06/01/95	AT
2-Methylnaphthalene	BDL		µg/L		10	05/31/95	06/01/95	AT
Acenaphthene	BDL		µg/L		10	05/31/95	06/01/95	AT
Fluorene	BDL		µg/L		10	05/31/95	06/01/95	AT
Phenanthrene	BDL		µg/L		10	05/31/95	06/01/95	AT
Anthracene	BDL		µg/L		10	05/31/95	06/01/95	AT
Fluoranthene	BDL		µg/L		10	05/31/95	06/01/95	AT
Pyrene	BDL		µg/L		10	05/31/95	06/01/95	AT
Benzo(a)anthracene	BDL		µg/L		10	05/31/95	06/01/95	AT
Chrysene	BDL		µg/L		10	05/31/95	06/01/95	AT
Benzo(b)fluoranthene	BDL		µg/L		10	05/31/95	06/01/95	AT
Benzo(k)fluoranthene	BDL		µg/L		10	05/31/95	06/01/95	AT
Benzo(a)pyrene	BDL		µg/L		10	05/31/95	06/01/95	AT
Indeno(1,2,3-c,d)pyrene	BDL		µg/L		10	05/31/95	06/01/95	AT
Dibenzo(a,h)anthracene	BDL		µg/L		10	05/31/95	06/01/95	AT
Benzo(g,h,i)perylene	BDL		µg/L		10	05/31/95	06/01/95	AT
Surrogates								
Nitrobenzene-d5	63	Min: 35		Max: 114				
2-Fluorobiphenyl	65	Min: 43		Max: 116				
4-Terphenyl-d14	96	Min: 33		Max: 141				
Volatile Aromatics				602				
Methyl-tert-butyl ether	BDL		µg/L		5.0	06/01/95	06/01/95	JQ
Benzene	BDL		µg/L		1.0	06/01/95	06/01/95	JQ
Toluene	BDL		µg/L		1.0	06/01/95	06/01/95	JQ
Ethyl benzene	BDL		µg/L		1.0	06/01/95	06/01/95	JQ
Xylene, Total	BDL		µg/L		1.0	06/01/95	06/01/95	JQ

ISI100014396
Attn: RON BOARDMAN

P.O. BOX 150016
NAS CECIL FIELD, FL
32215

5 Jun 1995
Report J5-05-262-01
LAB ID. 82223/E82101

Parameter	Result		Units	Method	Det. Limit	Extracted	Analyzed	Analyst
Chlorobenzene	BDL		µg/L		1.0	06/01/95	06/01/95	JQ
1,4-Dichlorobenzene	BDL		µg/L		1.0	06/01/95	06/01/95	JQ
1,3-Dichlorobenzene	BDL		µg/L		1.0	06/01/95	06/01/95	JQ
1,2-Dichlorobenzene	BDL		µg/L		1.0	06/01/95	06/01/95	JQ
Surrogates								
Bromobenzene	94.9	Min: 70		Max: 130				
Volatile Halocarbons				601				
Dichlorodifluoromethane	BDL		µg/L		1.0	06/01/95	06/01/95	JQ
Chloromethane	BDL		µg/L		1.0	06/01/95	06/01/95	JQ
Bromomethane	BDL		µg/L		1.0	06/01/95	06/01/95	JQ
Vinyl chloride	BDL		µg/L		1.0	06/01/95	06/01/95	JQ
Chloroethane	BDL		µg/L		1.0	06/01/95	06/01/95	JQ
Methylene chloride	BDL		µg/L		1.0	06/01/95	06/01/95	JQ
Trichlorofluoromethane	BDL		µg/L		1.0	06/01/95	06/01/95	JQ
1,1-Dichloroethene	BDL		µg/L		1.0	06/01/95	06/01/95	JQ
1,1-Dichloroethane	BDL		µg/L		1.0	06/01/95	06/01/95	JQ
total-1,2-Dichloroethene	BDL		µg/L		1.0	06/01/95	06/01/95	JQ
Chloroform	BDL		µg/L		1.0	06/01/95	06/01/95	JQ
1,2-Dichlorethane	BDL		µg/L		1.0	06/01/95	06/01/95	JQ
1,1,1-Trichloroethane	BDL		µg/L		1.0	06/01/95	06/01/95	JQ
Carbon tetrachloride	BDL		µg/L		1.0	06/01/95	06/01/95	JQ
Bromodichloromethane	BDL		µg/L		1.0	06/01/95	06/01/95	JQ
1,2-Dichloropropane	BDL		µg/L		1.0	06/01/95	06/01/95	JQ
trans-1,3-Dichloropropene	BDL		µg/L		1.0	06/01/95	06/01/95	JQ
Trichloroethene	BDL		µg/L		1.0	06/01/95	06/01/95	JQ
Dibromochloromethane	BDL		µg/L		1.0	06/01/95	06/01/95	JQ
1,1,2-Trichloroethane	BDL		µg/L		1.0	06/01/95	06/01/95	JQ
cis-1,3-Dichloropropene	BDL		µg/L		1.0	06/01/95	06/01/95	JQ
2-Chloroethylvinyl ether	BDL		µg/L		1.0	06/01/95	06/01/95	JQ
Bromoform	BDL		µg/L		1.0	06/01/95	06/01/95	JQ
1,1,2,2-Tetrachloroethane	BDL		µg/L		1.0	06/01/95	06/01/95	JQ
Tetrachloroethene	BDL		µg/L		1.0	06/01/95	06/01/95	JQ
Chlorobenzene	BDL		µg/L		1.0	06/01/95	06/01/95	JQ
1,3-Dichlorobenzene	BDL		µg/L		1.0	06/01/95	06/01/95	JQ
1,2-Dichlorobenzene	BDL		µg/L		1.0	06/01/95	06/01/95	JQ

ISI100014396
Attn: RON BOARDMAN

P.O. BOX 150016
NAS CECIL FIELD, FL
32215

5 Jun 1995
Report J5-05-262-01
LAB ID. 82223/E82101

Parameter	Result		Units	Method	Det. Limit	Extracted	Analyzed	Analyst
1,4-Dichlorobenzene	BDL		µg/L		1.0	06/01/95	06/01/95	JQ
Surrogates								
Bromobenzene	95.0	Min: 70		Max: 130				

Karen T. Foreman
Karen Foreman, Laboratory Director

Florida Department of Environmental Regulation
Twin Towers Office Bldg. • 2600 Blair Stone Road • Tallahassee, Florida 32399-2400

DER Form # 17-761.900(5)
Form Title Underground Storage Tank Installation & Removal Form for Certified Contractors
Effective Date December 10, 1990
DER Application No. _____ (Filled in by DER)

Underground Storage Tank Installation and Removal Form For Certified Contractors

Pollutant Storage System Specialty Contractors as defined in Section 489.113, Florida Statutes (Certified contractors as defined in Section 17-761.200, Florida Administrative Code) shall use this form to certify that the installation, replacement or removal of the storage tank system(s) located at the address listed below was performed in accordance with Department Reference Standards.

General Facility Information

1. DER Facility Identification No.: N/A
2. Facility Name: Naval Air Station - Cecil Field Enlist Telephone: (____) _____
3. Street Address (physical location): Naval Air Station - Cecil Field Housing #429
4. Owner Name: U.S. Navy Telephone: (____) _____
5. Owner Address: Naval Air Station - Cecil Field
6. Number of Tanks: a. Installed at this time _____ b. Removed at this time One
7. Tank(s) Manufactured by: Unknown
8. Date Work Initiated: 4/17/95 9. Date Work Completed: 4/17/95

Underground Pollutant Tank Installation Checklist

Please certify the completion of the following installation requirements by placing an (X) in the appropriate box.

1. The tanks and piping are corrosion resistant and approved for use by State and Federal Laws. ☐
2. Excavation, backfill and compaction completed in accordance with NFPA (National Fire Protection Association) 30(87), API (American Petroleum Institute) 1615, PEI (Petroleum Equipment Institute) RP100-87 and the manufacturers' specifications. ☐
3. Tanks and piping pretested and installed in accordance with NFPA 30(87), API 1615, PEI/RP100(87) and the manufacturers' specifications. ☐
4. Steel tanks and piping are cathodically protected in accordance with NFPA 30(87), API 1632, UL (Underwriters Laboratory) 1746, STI (Steel Tank Institute) R892-89 and the manufacturer's specifications. ☐
5. Tanks and piping tested for tightness after installation in accordance with NFPA 30(87) and PEI/RP100-87. ☐
6. Monitoring well(s) or other leak detection devices installed and tested in accordance with Section 17-761.640, Florida Administrative Code (F.A.C.) ☐
7. Spill and overfill protection devices installed in accordance with Section 17-761.500, F.A.C. ☐
8. Secondary containment installed for tanks and piping as applicable in accordance with Section 17-761.500, F.A.C. ☐

Please Note: The numbers following the abbreviations (e.g. API 1615) are publication or specification numbers issued by these instututions.

Underground Pollutant Tank Removal Checklist

Closure assessment performed in accordance with Section 17-761.800, F.A.C. ☒

Underground tank removed and disposed of as specified in API 1604 in acordance with Section 17-761.800, F.A.C. ☒

Northwest District
160 Governmental Center
Pensacola, Florida 32501-5794
904-436-8300

Northeast District
7825 Baymeadows Way, Suite B-200
Jacksonville, Florida 32207
904-798-4200

Central District
3319 Maguire Blvd., Suite 232
Orlando, Florida 32803-3767
407-894-7555

Southwest District
4520 Oak Fair Blvd.
Tampa, Florida 33610-7347
813-623-5561

South District
2295 Bay St.
Fort Myers, Florida 33901-2896
813-332-6975

Southeast District
1800 S. Congress Ave., Suite A
West Palm Beach, Florida 33406
407-433-2650

DER Form # 17-761.900(5)
Form Title: Underground Storage Tank Installation & Removal Form for Certified Contractors
Effective Date: December 10, 1990
DER Application No. _____
(Filled in by DER)

Certification

I hereby certify and attest that I am familiar with the facility that is registered with the Florida Department of Environmental Regulation; that to the best of my knowledge and belief, the tank installation, replacement or removal at this facility was conducted in accordance with Chapter 489 and Section 376.303, Florida Statutes and Chapter 17-761, Florida Administrative Code (and its adopted reference sources from publications and standards of the National Fire Protection Association (NFPA), the American Petroleum Institute (API), the National Association of Corrosion Engineers (NACE), American Society for Testing and Materials (ASTM); Petroleum Equipment Institute (PEI); Steel Tank Institute (STI); Underwriters Laboratory (UL); and the tank and integral piping manufacturers' specifications; and that the operations on the checklist were performed accordingly.

Robert Boardman	RC 054952
(Type or Print) Certified Pollutant Tank Contractor Name. Pollutant Storage System Specialty Contractor License Number (PSSSC)	PSSSC Number
Robert M. Boardman	7-12-95
Certified Tank Contractor Signature	Date
Vernon McKinnon	7-12-95
(Type or Print) Field Supervisor Name	Date
Vernon McKinnon	7-12-95
Field Supervisor Signature	Date

The owner or operator of the facility must register the tanks with the Department at least 10 days before the installation. The installer must submit this form no more than 30 days after the completion of installation to the Department of Environmental Regulation at the address printed at the top of page one.