N60200.AR.001668
NAS CECIL FIELD, FL
5090.3a

REMEDIAL ACTION PLAN FOR BUILDING 9 FORMER TANKS 9L1 AND 9L2 NAS CECIL FIELD FL

2/1/1999

TETRA TECH NUS INC

REMEDIAL ACTION PLAN
BUILDING 9, FORMER TANKS 9L1 & 9L2

Naval Air Station Cecil Field
Jacksonville, Florida

Southern Division
Naval Facilities Engineering Command
Contract Number N62467-94-D-0888
Contract Task Order 0065

February 1999

REMEDIAL ACTION PLAN
BUILDING 9, FORMER TANKS 9L1 & 9L2

NAVAL AIR STATION CECIL FIELD
JACKSONVILLE, FLORIDA

Submitted to:
Southern Division
Naval Facilities Engineering Command
2155 Eagle Drive
North Charleston, South Carolina 29406

Submitted by:
Tetra Tech NUS, Inc.
Foster Plaza 7, 661 Andersen Drive,
Pittsburgh, PA 15220

CONTRACT NUMBER N62467-94-D-0888
CONTRACT TASK ORDER 0065

February 1999

PREPARED BY:

SAMUEL P. PRATT, P.G.
TASK ORDER MANAGER
FLORIDA LICENSE No. 0001824
TETRA TECH NUS, INC
JACKSONVILLE, FLORIDA

APPROVED FOR SUBMITTAL BY:

DEBBIE WROBLEWSKI
PROGRAM MANAGER
TETRA TECH NUS, INC.
PITTSBURGH, PENNSYLVANIA

PROFESSIONAL CERTIFICATION

Remedial Action Plan

Naval Air Station Cecil Field

Building 9 Former Tanks 9L1 and 9L2

Jacksonville, Florida

This remedial Action Plan has been prepared under my responsible supervision in conformance with standard engineering practices and principles to remediate this site to acceptable hydrocarbon concentrations as specified in Chapter 62-700 of the Florida Administrative Code.

Mark P. Speranza P.E.

Florida License No. 0050304

Mark P Speranza

TABLE OF CONTENTS

SECTION	PAGE
EXECUTIVE SUMMARY	ES-1
1.0 INTRODUCTION	1-1
1.1 PURPOSE AND SCOPE	1-1
1.2 SITE DESCRIPTION	1-1
1.3 SITE HISTORY	1-4
1.4 REPORT ORGANIZATION	1-4
2.0 SITE ASSESSMENT REPORT FINDINGS AND CONCLUSIONS	2-1
2.1 LITHOLOGIC FINDINGS	2-1
2.2 GROUNDWATER AND AQUIFER CHARACTERISTICS	2-1
2.3 CONTAMINATED SOIL ASSESSMENT	2-1
2.4 CONTAMINATED GROUNDWATER ASSESSMENT	2-3
2.5 SITE ASSESSMENT REPORT CONCLUSIONS	2-3
3.0 REMEDIAL ACTION PLAN GOALS	3-1
3.1 SOIL REMEDIATION GOALS	3-1
3.2 GROUNDWATER REMEDIATION GOALS	3-2
4.0 REMEDIAL ALTERNATIVE TECHNOLOGY SCREENING	4-1
4.1 NATURAL ATTENUATION	4-1
4.2 CHEMICALLY ENHANCED NATURAL ATTENUATION	4-2
4.3 SOIL EXCAVATION AND REMOVAL	4-3
4.4 SOIL VAPOR EXTRACTION	4-3
4.5 AIR SPARGING	4-4
4.6 GROUNDWATER PUMP AND TREAT	4-5
4.7 COST COMPARISON	4-6
5.0 REMEDIATION SYSTEM DESIGN	5-1
5.1 VAPOR EXTRACTION WELL PLACEMENT AND DESIGN	5-1
5.2 AIR SPARGING WELL PLACEMENT AND DESIGN	5-1
5.3 SOIL VAPOR EXTRACTION BLOWER SIZING	5-5
5.4 AIR SPARGING BLOWER SIZING	5-5
5.5 SOIL VAPOR EXTRACTION SYSTEM CONTROLS	5-6
5.6 AIR SPARGING SYSTEM CONTROLS	5-8
5.7 AS/SVE PIPING	5-8
5.8 BLOWER OFF-GAS TREATMENT	5-14
6.0 START UP AND OPERATIONS AND MAINTENANCE OF SYSTEM	
6.1 SYSTEM START-UP	6-1
6.2 SYSTEM OPERATIONS AND MAINTENANCE	6-2
6.3 SYSTEM DE-ACTIVATION	6-4

7.0 MONITORING OF REMEDIAL PROGRESS

7.1 SHALLOW MONITORING WELL LOCATION AND DESIGN 7-1
7.2 SELECTED GROUNDWATER MONITORING WELLS AND SAMPLING FREQUENCY 7-1
7.3 SELECTED SOIL MONITORING POINTS AND FREQUENCY 7-1
7.4 MONITORING PARAMETERS 7-2
7.5 CALCULATED CLEAN UP-TIME 7-4

8.0 REFERENCES 8-1

FIGURES

NUMBER PAGE

1-1 SITE VICINITY MAP 1-2

1-2 SITE PLAN 1-3

2-1 GROUNDWATER ELEVATION AND DIRECTION OF FLOW JUNE 4, 1998 2-2

2-2 HORIZONTAL EXTENT OF SOIL CONTAMINATION 2-4

2-3 HORIZONTAL EXTENT OF GROUNDWATER CONTAMINATION 2-5

5-1 SOIL VAPOR EXTRACTION SYSTEM SITE PLAN/ZONE OF INFLUENCE 5-2

5-2 WELL INSTALLATION & PIPING CROSS SECTIONS 5-3

5-3 AIR SPARGING SYSTEM SITE PLAN AND ZONE OF INFLUENCE 5-4

5-4 VAPOR EXTRACTION AND TREATMENT PROCESS AND INSTRUMENT DIAGRAM 5-7

5-5 AIR SPARGING SYSTEM PROCESS AND INSTRUMENT DIAGRAM 5-9

5-6 AS/SVE CONCEPTUAL DESIGN SITE PLAN 5-10

5-7 AS/SVE CONCEPTUAL DESIGN PROFILE 5-11

5-8 CONCEPTUAL AS/VE TREATMENT COMPOUND LAYOUT 5-12

5-9 SINGLE LINE DIAGRAM AND ELECTRICAL SCHEMATIC DIAGRAM 5-13

7-1 ADDITIONAL MONITORING WELL CONSTRUCTION 7-2

7-2 ADDITIONAL MONITORING WELL LOCATION 7-3

TABLES

NUMBER

4-1 SOIL REMEDIATION ALTERNATIVES COST COMPARISON 4-7

4-2 GROUNDWATER REMEDIATION ALTERNATIVES COST COMPARISON 4-8

4-3 COMBINED REMEDIATION ALTERNATIVES COST COMPARISON MATRIX 4-9

APPENDICES

APPENDIX A — SAR TABLES AND FIGURES
APPENDIX B — STATE CLEANUP VALUES
APPENDIX C — DESIGN CALCULATIONS
APPENDIX D — VENDOR INFORMATION

EXECUTIVE SUMMARY
OF
REMEDIAL ACTION PLAN for
Naval Air Station Cecil Field
Building 9, Tanks 9L1 & 9L2
Jacksonville, Florida

Tetra Tech NUS, Inc. (TtNUS) has completed a Remedial Action Plan (RAP) at the above-referenced facility in accordance with the requirements of Chapter 62-770, Florida Administrative Code (FAC). This Plan is being submitted to the Naval Air Station Cecil Field (NASCF) base closure team (BCT) for approval.

TtNUS performed the following tasks during the RAP:

- Reviewed past pilot-scale treatability studies for relevant technologies from sites at NASCF.
- Reviewed the Site Assessment Report (HLA, October 1998).
- Conducted a site survey to identify utilities and to construct a site plan.
- Designed a remedial action plan that would remediate the contaminated soil and groundwater.
- Specified a system start-up, operations, and maintenance plan to run the system.
- Specified a sampling plan to track the remediation status of the site.

1.0 INTRODUCTION

1.1 PURPOSE AND SCOPE

This Remedial Action Plan (RAP) was prepared by Tetra Tech NUS (TtNUS) for the U.S. Navy (Navy) Southern Division Naval Facilities Engineering Command under Contract Task Order 0065, for the Comprehensive Long-term Environmental Action Navy (CLEAN III), Contract Number N62467-94-D-0888. The RAP was prepared to recommend treatment options for the contaminated soil and groundwater located at Building 9 (Former Tanks 9L1 and 9L2), Naval Air Station Cecil Field in Jacksonville, Florida.

The purpose of this RAP was to determine the best technology to remediate the impacted soil and groundwater in accordance with the requirements of Chapter 62-770 of the Florida Administrative Code (FAC). Then to complete a design for the remedial technology which offers the best assurance of remediating the site in a timely manner.

1.2 SITE DESCRIPTION

Building 9 is located at the intersection of "B" Avenue and 3rd Street in the industrial section of NASCF. Building 9 currently serves as the NASCF Main Base Fire Station and Safety Office. "B" Avenue and 3rd Street border the site to the East and South respectively; to the North the site is bordered by a parking lot servicing the site, and to the West by a storm drainage ditch. **Figure 1-1** and **Figure 1-2** illustrate the site vicinity and site plan respectively.

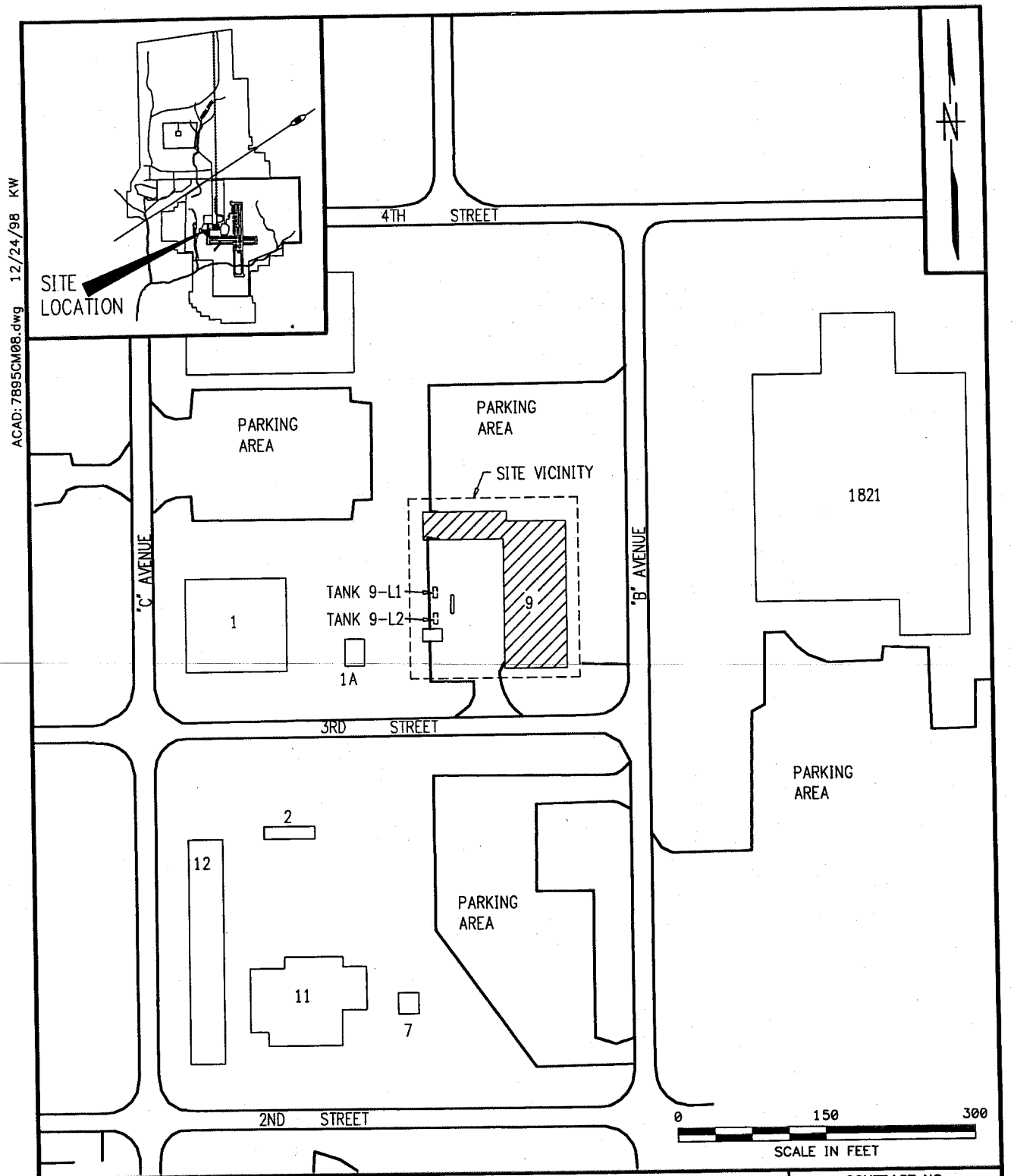

DRAWN BY KW DATE 12/24/98			CONTRACT NO. 7895
CHECKED BY DATE			APPROVED BY DATE
COST/SCHED--AREA			APPROVED BY DATE
SCALE AS NOTED			DRAWING NO. FIGURE 1-1 / REV. 0

SITE VICINITY MAP
REMEDIAL ACTION PLAN
BUILDING 9, TANKS 9-L1 AND 9-L2
NAVAL AIR STATION CECIL FIELD
JACKSONVILLE, FLORDIA

FORM CADD NO. SDIV_AV.DWG - REV 0 - 1/20/98

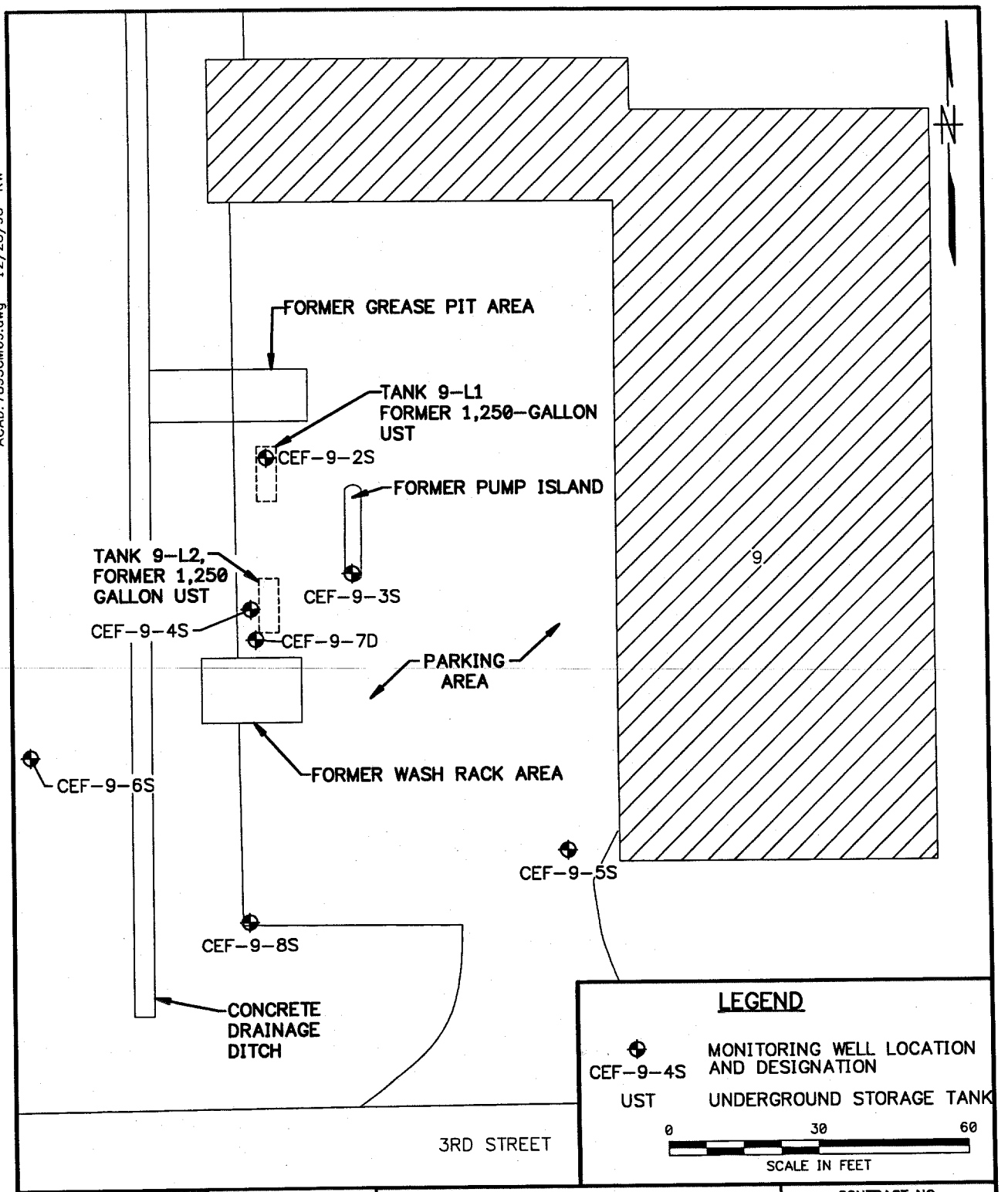

DRAWN BY KW DATE 12/24/98	DEPARTMENT OF THE NAVY SOUTHERN DIV FACILITIES ENGINEERING COMD	SITE PLAN REMEDIAL ACTION PLAN BUILDING 9, TANKS 9-L1 AND 9-L2 NAVAL AIR STATION CECIL FIELD JACKSONVILLE, FLORDIA	CONTRACT NO. 7895
CHECKED BY DATE			APPROVED BY DATE
COST/SCHED-AREA			APPROVED BY DATE
SCALE AS NOTED			DRAWING NO. FIGURE 1-2 / REV. 0

FORM CADD NO. SDIV_AV.DWG - REV 0 - 1/20/98

1.3 SITE HISTORY

Building 9 has served as the NAS Cecil Field Main Base Fire Station since 1953. Before being converted to the Fire Station, Building 9 was used as a Public Works Center incorporating a transportation garage and automotive hobby shop. The site formerly contained two (2) 1,250-gallon underground storage tanks (Tanks 9L1 and 9L2) that stored gasoline. A fuel facility was located to the west of the former tanks, but was removed at an unknown date. The tanks are believed to have been removed in 1985 (HLA 1998). The grease pit indicated on **Figure 1-2** is no longer present at the site.

1.4 REPORT ORGANIZATION

This report is organized into nine (9) sections. Below is a list of the sections and a brief description of their purpose:

Section 1	Introduction	Supplies the report's purpose, scope, site information, and report organization.
Section 2	Site Assessment Report Findings and Conclusions	Reviews the approved SAR, and summarizes the SAR's findings and conclusions.
Section 3	Remedial Action Plan Goals	Sets the soil and groundwater treatment objectives for the remedial system / plan.
Section 4	Remedial Alternative Technology Screening	Presents the alternatives for remediation, determines the suitability for the site, and develops budgetary costs for each.
Section 5	Air Sparging/Soil Vapor Extraction System Design	Presents all of the assumptions made, the detailed design of an AS/SVE remediation system, and illustrates how the system works.
Section 6	Start-Up and Operations and Maintenance of System	Establishes the procedures for starting up the system and proper maintenance duties/intervals.
Section 7	Monitoring of Remedial Progress	Establishes monitoring points for the remediation system and sampling frequencies to evaluate the system's effectiveness.
Section 8	References	Lists all references used.

2.0 SITE ASSESSMENT REPORT FINDINGS AND CONCLUSIONS

A site assessment was conducted from May to June 1998 by Harding Lawson and Associates (HLA) to determine the extent of soil and groundwater contamination at the site. A Site Assessment Report was submitted to the BCT in October 1998. The following is a summary of the SAR.

2.1 LITHOLOGIC FINDINGS

The site is underlain by silty-fine grained sand and fine grained sand with construction debris to a depth of 10 feet. From 10 to 30 feet bls the site is underlain with fine grained silty sand. Boring logs are contained within the SAR and can be found in the BCT library.

2.2 GROUNDWATER AND AQUIFER CHARACTERISTICS

The depth to groundwater is located at 5 to 7 feet bls, and flows to the southeast. The flow velocity was estimated at 0.06 ft/year. The following aquifer parameters were estimated in the SAR conducted by HLA (October 1998).

Hydraulic Conductivity	K	=	5.0 ft/day
Hydraulic gradient	I	=	0.003 ft/ft
Effective porosity	n_e	=	0.25 (unitless)
Soil Permeability	k	=	1.80×10^{-8} cm^2

The groundwater potentiometric surface map, as defined in the SAR, is presented as **Figure 2-1**.

2.3 CONTAMINATED SOIL ASSESSMENT

A soil assessment was conducted at the site by installing soil borings and wells at the site. During the installation of the borings and wells, the soils were screened for petroleum vapors using an Organic Vapor Analyzer (OVA), and the procedures for headspace measurement/analysis set forth in FAC 62-770. In addition to the headspace analysis, soil samples were collected and sent to a laboratory for analysis of the Kerosene analytical group

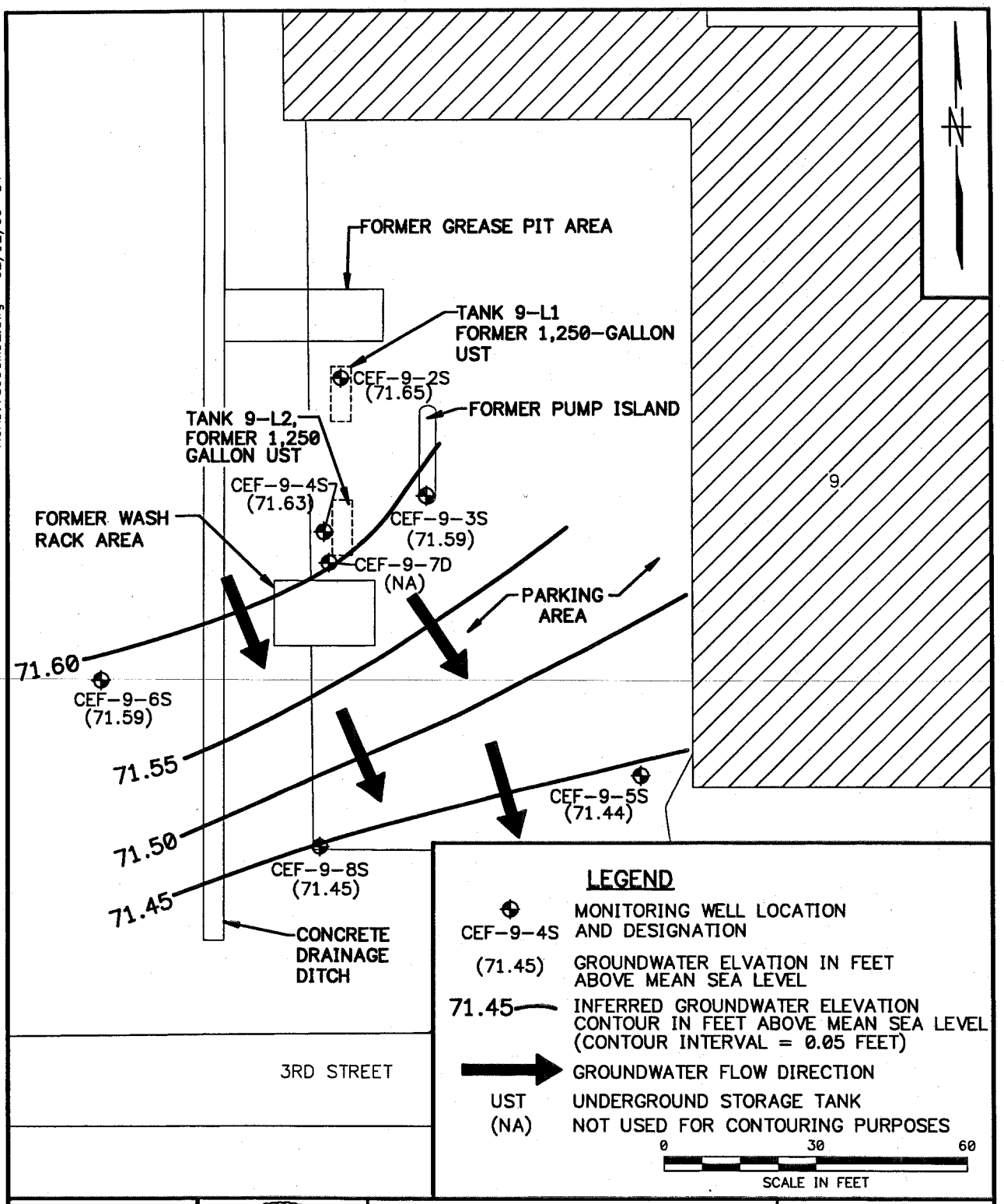

ACAD: 7895CM12.dwg 02/12/99 DT

DRAWN BY KW DATE 12/28/98	DEPARTMENT OF THE NAVY SOUTHERN DIV FACILITIES ENGINEERING COMMAND	GROUNDWATER ELEVATION AND DIRECTION OF FLOW JUNE 4, 1998 REMEDIAL ACTION PLAN BUILDING 9, TANKS 9-L1 AND 9-L2 NAVAL AIR STATION CECIL FIELD JACKSONVILLE, FLORDIA	CONTRACT NO. 7895
CHECKED BY DATE			APPROVED BY DATE
COST/SCHED-AREA			APPROVED BY DATE
SCALE AS NOTED			DRAWING NO. FIGURE 2-1 REV. 0

FORM CADD NO. SDIV_AV.DWG - REV 0 - 1/20/98

parameters. The results indicate that there are petroleum-impacted soils at the site. **Figure 2-2** illustrates the horizontal extent of the approximately 3000 ft^2 of contaminated soil. The soil contamination is vertically delineated to a depth of 7 ft yielding a total volume of 778 cubic yards of contaminated soil. The figure was taken from the results of the SAR conducted by HLA. **Appendix A** contains both the tables and figure presented in the SAR summarizing the above results.

2.4 CONTAMINATED GROUNDWATER ASSESSMENT

Groundwater samples were collected from seven (7) monitoring wells and three (3) direct push technology boreholes and analyzed for KAG parameters. The results indicated that petroleum constituents had impacted the groundwater. **Figure 2-3** illustrates the horizontal extent of groundwater contamination in the surficial aquifer. The analytical results from the deep monitoring well indicate that the vertical extent of the groundwater contamination is approximately 20 feet below land surface (bls). **Appendix A** contains both the tables and figure presented in the SAR summarizing the above results.

2.5 SITE ASSESSMENT REPORT CONCLUSIONS

The SAR concluded that petroleum constituents impacted both the soil and groundwater at the site. That there is no free product evident at the site. The groundwater contamination covers an area of approximately 4,275 sq. ft and is vertically delineated to 20 feet bls. The soil contamination covers an area of approximately 3,000 sq. ft, with a depth of 7 feet.

In accordance with FAC 62-770, the SAR recommended that a Remedial Action Plan be implemented.

ACAD: 7895CM10.dwg 02/12/99 HJP

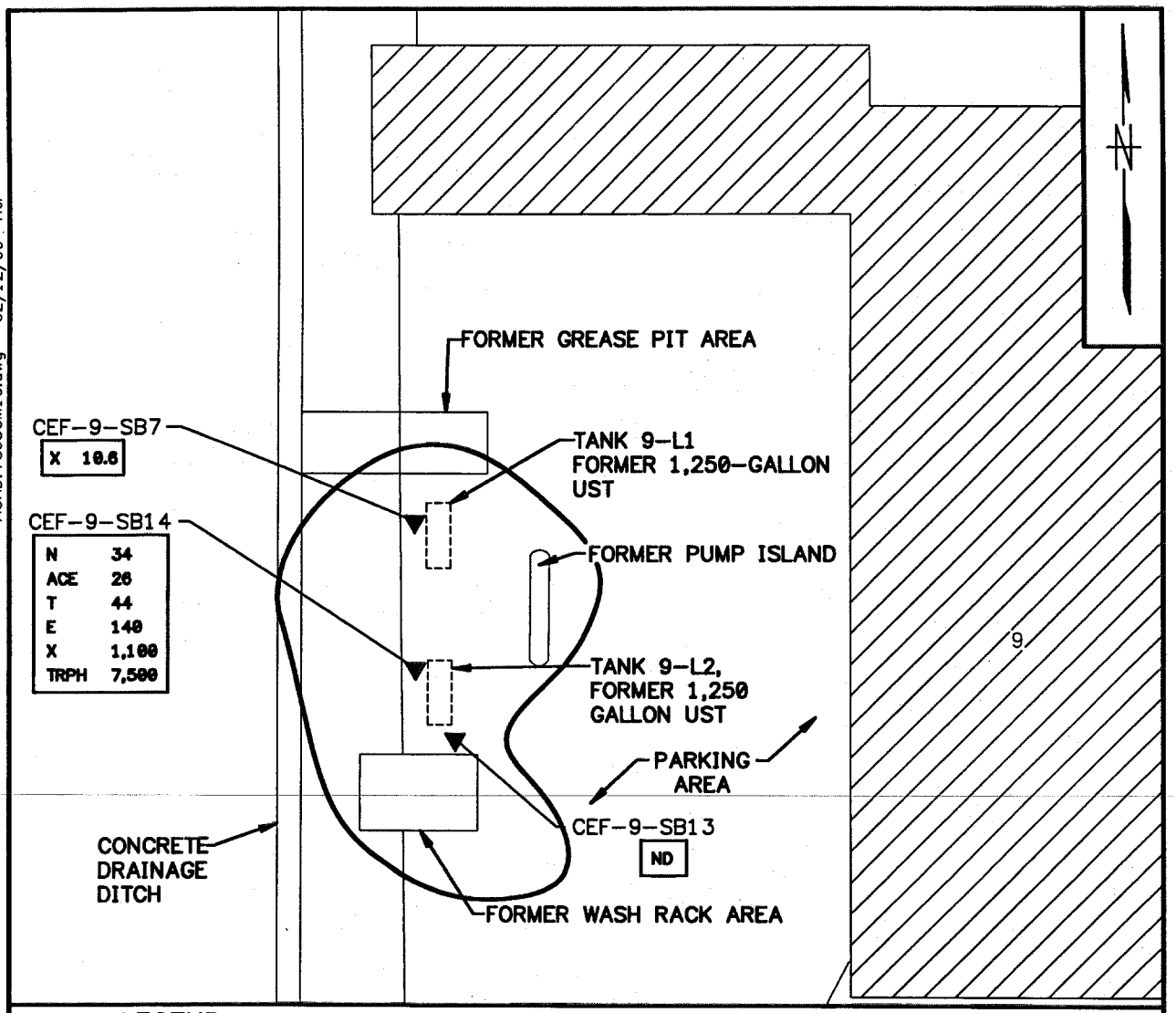

LEGEND

▼ CEF-9-SB14	SOIL BORING LOCATION AND DESIGNATION
⌒	HORIZONTAL EXTENT OF SOIL CONTAMINATION (REFERENCE HLA SAR, 10/98)
X 10.6	CONCENTRATIONS WHICH EXCEED FDEP LEACHALILITY SCTLS (CHAPTER 62-770, FAC)
ND	DETECTIONS DO NOT EXCEED FDEP LEACHABILITY SCTLS (CHAPTER 62-770, FAC)

N	NAPHTHALENE
ACE	ACENOPHTHYLENE
T	TOLUENE
E	ETHYLBENZENE
X	TOTAL XYLENES
TRPH	TOTAL RECOVERABLE PETROLEUM HYDROCARBONS
UST	UNDERGROUND STORAGE TANK

NOTE:
ALL CONCENTRATIONS IN MILLIGRAMS PER KILOGRAM.

0 30 60
SCALE IN FEET

DRAWN BY KW DATE 12/28/98	DEPARTMENT OF THE NAVY SOUTHERN DIV FACILITIES ENGINEERING COMD	HORIZONTAL EXTENT OF SOIL CONTAMINATION (HLA 10/98) REMEDIAL ACTION PLAN BUILDING 9, TANKS 9-L1 AND 9-L2 NAVAL AIR STATION CECIL FIELD JACKSONVILLE, FLORDIA	CONTRACT NO. 7895
CHECKED BY DATE			APPROVED BY DATE
COST/SCHED-AREA			APPROVED BY DATE
SCALE AS NOTED			DRAWING NO. FIGURE 2-2 REV. 0

FORM CADD NO. SDIV_AV.DWG - REV 0 - 1/20/98

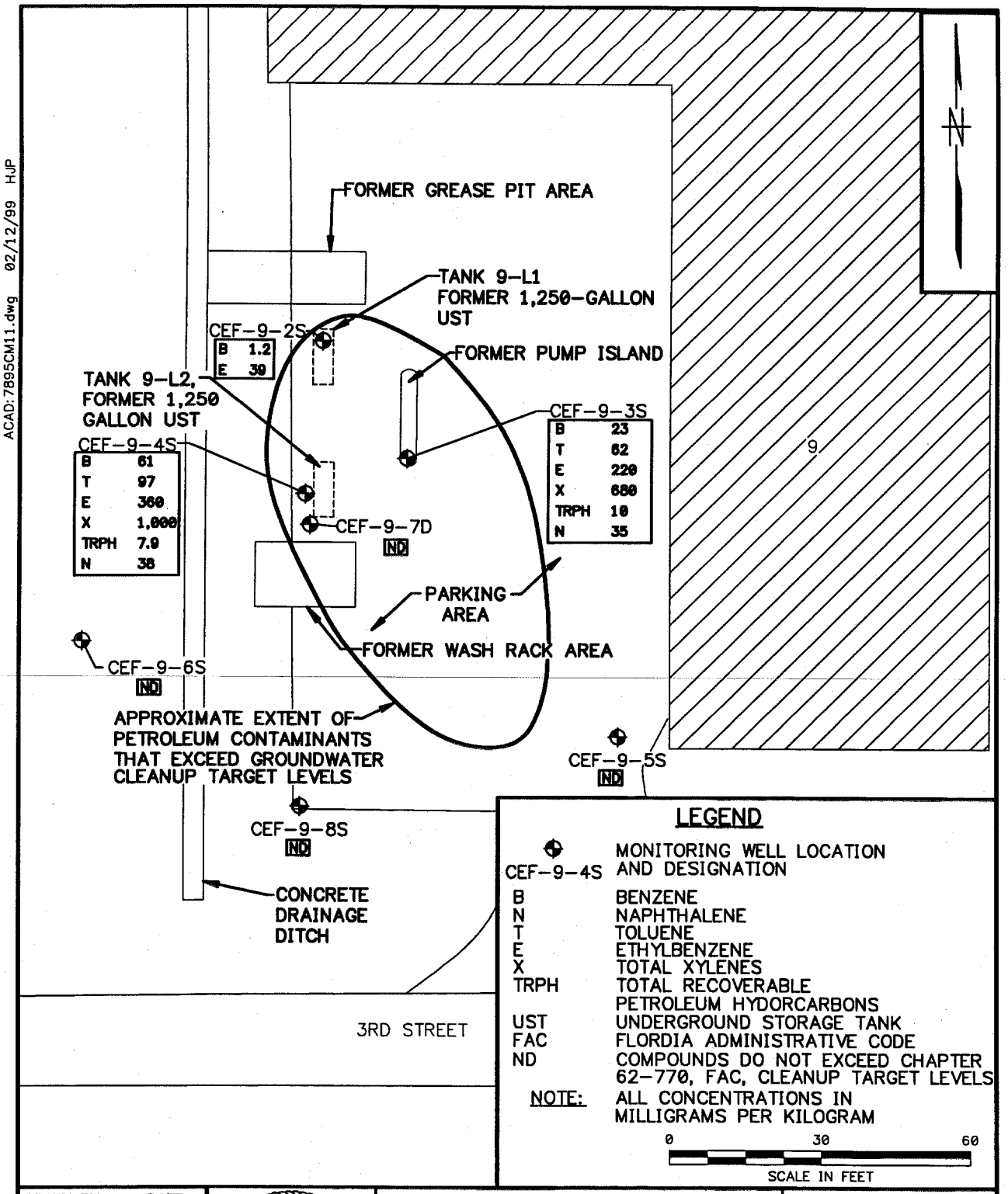

ACAD:7895CM11.dwg 02/12/99 HJP

DRAWN BY KW DATE 12/28/98	DEPARTMENT OF THE NAVY SOUTHERN DIV FACILITIES ENGINEERING COMD	HORIZONTAL EXTENT OF GROUNDWATER CONTAMINATION JUNE 1998 (HLA, 12/98) REMEDIAL ACTION PLAN BUILDING 9, TANKS 9-L1 AND 9-L2 NAVAL AIR STATION CECIL FIELD JACKSONVILLE, FLORDIA	CONTRACT NO. 7895
CHECKED BY DATE			APPROVED BY DATE
COST/SCHED-AREA			APPROVED BY DATE
SCALE AS NOTED			DRAWING NO. FIGURE 2-3 REV. 0

FORM CADD NO. SDIV_AV.DWG - REV 0 - 1/20/98

3.0 REMEDIAL ACTION PLAN GOALS

The purpose of this RAP is to reduce both the soil and groundwater contaminant concentrations to below state mandated target levels. The following paragraphs list the target levels for site specific chemicals of concern (COC) for each of the contaminated media.

3.1 SOIL REMEDIATION GOALS

This RAP recognizes Table V (Selected Soil Cleanup Target Levels or SCTLs) as listed in the FDEP guidance manual for RAPs as the selected soil remediation objectives. A complete lest of these objectives is presented in **Appendix B**. Soil remediation goals for the site specific COC's are presented in the Table below.

Site-Specific COC	Concentration in (mg/Kg) from Table V of SCTL's list
Naphthalene	1
Acenaphthylene	22
Phenanthrene	120
Benzene	0.40
Toluene	0.40
Ethylbenzene	0.40
Total Xylenes	0.30
TRPH	340

3.2 GROUNDWATER REMEDIATION GOALS

This RAP recognizes the Table V (Groundwater Cleanup Target Levels) as listed in the FDEP guidance manual for RAPs as the selected groundwater remediation objectives. A complete list of these objectives is presented in **Appendix B**. Groundwater remediation goals for site-specific COCs are listed in the Table below.

Site-Specific COCs	Concentrations from Table V
Benzene	1 ug/L
Ethylbenzene	30 ug/L
Toluene	40 ug/L
Total Xylenes	20 ug/L
Naphthalene	20 ug/L
TRPH	5 mg/L

4.0 REMEDIAL ALTERNATIVE TECHNOLOGY SCREENING

TtNUS conducted a screening of available technologies in order to determine the best remedial alternative for the referenced site. Included in this screening is a comparative cost analysis for each of the technologies. These estimates are "budgetary" estimates used in order to help determine the best remediation option. The cost analyses are presented in **Tables 4-1** and **4-2,** with a comparison matrix presented in **Table 4-3**.

4.1 NATURAL ATTENUATION

Natural Attenuation (NA) utilizes several rounds of sampling and analysis over time to track the progress of naturally occurring biological activity breaking down the petroleum hydrocarbon contamination. Through the use of models, periodic sampling, and analysis a determination can be made of anticipated clean up time and the effectiveness of the existing microbial activity.

NA is cost effective and implementable when there are no receptors in the area, the source of the contamination is either dissipated or removed, and the use of the land will be such that the potential for groundwater use is minimized.

NA is a "passive" technology, therefore if it is shown that decreases in the COC concentrations are not being achieved then a more aggressive approach will be needed.

TtNUS assumed that there would be an initial round of sampling from all the wells to establish a baseline. Thereafter, NA plan would require periodic sampling and analysis of one up gradient, one down gradient, and two wells located in the contaminated portion of the groundwater plume. The initial samples will establish a baseline for future comparison with the periodic sampling results.

The cost estimate assumes the following:

- Sampling frequency will be quarterly for the first two years, then annually for a total monitoring period of twenty (20) years.
- Installation of an additional shallow monitoring well (in between the down gradient and moderately contaminated well) at the site.

- Quarterly and/or annual monitoring reports will be submitted following each sampling event.

TtNUS examined use of NA to remediate the groundwater. However, as stated above, the soil contamination or source must be removed or remediated for NA to be a viable remediation alternative.

4.2 CHEMICALLY ENHANCED NATURAL ATTENUATION (Oxygen Releasing Compound)

This technology is essentially the same as natural attenuation, however an oxygen-releasing compound (ORC) is injected or applied to the contaminated groundwater. This chemical addition increases the dissolved oxygen in the groundwater. Microbial activity that breaks down petroleum hydrocarbons is generally an aerobic process and can be accelerated by the increased presence of oxygen. Application of ORC is relatively inexpensive, but has had mixed results in the past. If a determination to use NA as a remedial option is decided, then use of ORC should be considered.

TtNUS assumed that there would be an initial set of sampling on all the wells. Then periodic sampling from one up gradient, one down gradient, and two wells in the contaminated portion of the groundwater plume would be performed. The initial samples will establish a baseline for future comparison to periodic samples.

The cost estimate assumes the following:

- Sampling frequency will be quarterly for the first two years, then annually for a total monitoring period of ten (5) years.
- ORC will initially be seeded into the groundwater via approximately 20 direct push technology piezometers with each point accepting around five (5) lbs of ORC.
- Ten pounds of ORC will be also placed in the four wells in the contaminated groundwater plume on a periodic basis. Application frequency will be quarterly for the monitoring period of 5 years.
- Installation of an additional shallow monitoring well (in between the down gradient and moderately contaminated well) at the site.
- Quarterly and/or annual monitoring reports will be submitted following each sampling event.

4.3 SOIL EXCAVATION AND OFF-SITE DISPOSAL

This technology involves the mobilization of equipment to the site, excavating the area of contaminated soil identified in the SAR (approximately 900 cubic yards) and disposing of the soil off site. This technology is the most intrusive, however there is 100% assurance that all of the contaminated soil and contaminant sources have been removed. The contaminated soils are either disposed of in an approved landfill, or taken to a soil burn facility for thermal treatment and recycling.

The cost estimate assumes the following:

- Remove approximately 4,500 sq. ft of existing pavement.
- Excavation of the approximately 3,000 ft^2 of contaminated soil to approximately eight (8) feet deep (one foot of over excavation to remove capillary zone soils) or 900 cubic yards of soil.
- Collecting confirmatory samples from the sides of the excavation, and from the stockpiled soil for disposal determination.
- Backfill and compact excavation with clean fill.
- Prepare sub-grade and repave approx. 4,500 sq. ft. of the parking lot and sod any disturbed grassy areas.
- A soil excavation and disposal report will be submitted following receipt of the laboratory analytical reports.

4.4 SOIL VAPOR EXTRACTION

This technology involves applying a vacuum or negative pressure to the vadose zone soils in order to induce mass transfer of the contaminants into the pores of the soil, and then remove the contaminants from the soils. The vacuum is applied through either a series of vertical wells or through the use of long horizontal well(s). The wells are placed just above the high seasonal water table and screened throughout the contaminated vadose zone.

This technology has proven, in the past, to quickly remediate vadose zone soil contamination and is not as intrusive or expensive as excavation and removal. Florida Department of Environmental Protection requires the treatment of off-gas vapors for at least the first 30 days

operation, then only if daily average discharge is over 13.7 lbs/day. Use of granular activated carbon (GAC) is an effective method for off-gas treatment.

The cost estimate assumes the following:

- Removing approximately 550 sq. ft of existing pavement to install two 110 ft horizontal vapor extraction trenches.
- Excavation of the piping trenches down to approximately six (6) feet.
- Install 4" perforated PVC piping, backfill around the pipe with gravel, then backfill and compact with excavated soils.
- Procure a vapor extraction equipment skid, carbon canisters, and a control panel.
- Construct a remediation equipment compound complete with electrical service and locking fence.
- Install all piping and electrical to the system components.
- Repave trenched areas of the parking lot, and sod disturbed grassy areas.
- Operate, maintain, and sample the system for a period of 1 year. Frequencies for O&M visits are monthly. Frequencies for sampling and analysis of the SVE effluent and effluent are monthly. Four (4) proposed monitoring wells will be sampled and analyzed for KAG constituents quarterly for the entire operations period.
- Quarterly and/or annual monitoring reports will be submitted following each sampling event.
- Four (4) confirmatory soil samples are included for lab analysis at the end of the remediation period.

4.5 AIR SPARGING

Air sparging is used in the remediation of contaminated groundwater. The technology involves injecting compressed air into the contaminated aquifer thereby increasing the mass transfer of the dissolved contaminants into the gas followed by upward migration of the volatilized contaminants to the vadose zone. The supply of air to the contaminated zone will also stimulate indigenous biodegradation of less volatile petroleum constituents.

This technology has proven effective in remediating contaminated groundwater within shallow aquifers. There are advantages to air sparging over other active remediation technologies in that operations and maintenance are usually less expensive. Also, discharge requirements are less stringent than technologies such as pump and treat. It should be noted that air sparging systems generally use an integrated AS/VE system in order to recover VOC's removed from the

contaminated aquifer. However for the cost comparison presented below this technology was evaluated on it's own since vapor extraction would be compared to other soil remediation technologies.

The cost estimate assumes the following:

- Install three air sparging wells.
- Removing pavement to install piping to and from three proposed air sparging wells (approximately 300 sq. ft of existing pavement).
- Excavation of the trenches area down to at least four (4) feet.
- Installing (2) 2" SCH 80 PVC pipes to each well, backfilling and compacting with excavated soils, then re-paving the trenched sections.
- Procure an air sparging equipment skid and a control panel.
- Construct a remediation equipment compound complete with electrical service and locking fence.
- Install all piping and electrical to the system components.
- Repave trenched areas of the parking lot, and sod disturbed grassy areas.
- Operate and maintain the system for a period of one year. Frequencies for O&M visits are monthly. There is no system sampling required for air sparging. Four (4) proposed monitoring wells will be sampled and analyzed for KAG constituents quarterly for the entire operations period.
- Quarterly and/or annual monitoring reports will be submitted following each sampling event.
- Initial baseline sampling of all the wells before system initiation, and at the end of the remediation period.

4.6 GROUNDWATER PUMP AND TREAT

This technology involves the installation of recovery wells to extract contaminated groundwater from the aquifer, conveying the groundwater to an above ground treatment facility and subsequent reinjection of the "clean" groundwater into the aquifer through an infiltration gallery .

Pump and treat generally takes longer and costs more than other active technologies. Pump and treat presents problems relating to the discharge of the treated groundwater, and many inherent maintenance problems due to fouling.

The cost estimate assumes the following:

- Install two groundwater recovery wells.
- Removing pavement to install piping to and from the two proposed recovery wells (approximately 400 sq. ft of existing pavement).
- Excavation of the trenches area down to at least four (4) feet.
- Installing (2) 2" SCH 40 PVC water pipes, and (2) 1" SCH 80 electrical PVC conduits to each well, installing (1) 3" SCH 40 PVC water pipe from the compound to an infiltration gallery, backfilling and compacting with excavated soils, then re-paving or sodding the trenched sections.
- Construction of an infiltration gallery.
- Procure groundwater recovery pumps, an air stripping equipment skid and a control panel.
- Construct a remediation equipment compound complete with electrical service and locking fence.
- Install all piping and electrical to the system components.
- Repave trenched areas of the parking lot, and sod disturbed grassy areas.
- Operate, maintain, and sample for a period of 5 years. Frequencies for O&M visits are monthly. Frequencies for sampling and analysis of the air stripper influent and effluent are monthly for the first year, then quarterly for the remaining operations period. Four (4) proposed monitoring wells will be sampled and analyzed for KAG constituents quarterly for the entire operations period.
- Quarterly and/or annual monitoring reports will be submitted following each sampling event.
- Initial baseline sampling of all the wells before system initiation, and at the end of the remediation period.

4.7 COST COMPARISON

Tables 4-1, 4-2, and **4-3** represent a "budgetary" cost comparison of all the remediation technologies investigated during the screening. **Table 4-3** illustrates a combined cost matrix for the remediation of both soil and groundwater.

Based upon these cost analyses and experiences with these technologies, TtNUS recommends design of an integrated Air Sparging / Soil Vapor Extraction System to remediate the soil and groundwater contamination at this site.

Table 4-1
Soil Remediation Alternatives Cost Comparison

Activity Description	Option 1 Soil Excavation & Removal			Option 2 Soil Vapor Extraction		
	Qty.	Unit Price	Total	Qty.	Unit Price	Total
Construction						
Soil Removal (per CY)	900	$6.00	$5,400.00	0	$4.75	$0.00
Soil Trans. & Disposal (per CY)	900	$70.00	$63,000.00	1	$300.00	$300.00
Backfill & Compact (per CY)	1000	$4.50	$4,500.00	0	$3.00	$0.00
Sod and Turf Application (LS)	1	$500.00	$500.00	1	$350.00	$350.00
Water/Air Piping Installation (ft)	0	$1.40	$0.00	300	$30.00	$9,000.00
Well Head(s) Construction (EA)	0	$1,200.00	$0.00	0	$1,200.00	$0.00
Compound Construction (LS	0	$5,500.00	$0.00	1	$5,500.00	$5,500.00
Gallery Installation (LS)	0	$3,500.00	$0.00	0	$3,500.00	$0.00
Misc Construction Materials	0	$4,000.00	$0.00	1	$4,000.00	$4,000.00
Equipment						
Vapor Extraction Blower Skid	0	$4,500.00	$0.00	1	$4,500.00	$4,500.00
Air Sparging Skid	0	$3,000.00	$0.00	0	$3,000.00	$0.00
Carbon Drums (Vapor Phase)	0	$500.00	$0.00	2	$500.00	$1,000.00
Air Stripping System	0	$7,500.00	$0.00	0	$7,500.00	$0.00
Control Panel	0	$1,500.00	$0.00	1	$1,500.00	$1,500.00
ORC (lbs)	0	$15.00	$0.00	0	$15.00	$0.00
Subcontracts						
Electrical Subcontract	0	$3,500.00	$0.00	1	$3,500.00	$3,500.00
Subcontract Pavement (Sq. Ft.)	4500	$3.50	$15,750.00	550	$6.50	$3,575.00
Laboratory Costs						
KAG (soil)	10	$450.00	$4,500.00	4	$450.00	$1,800.00
KAG (Groundwater)	0	$350.00	$0.00	0	$350.00	$0.00
EPA Method 18 (air)	0	$150.00	$0.00	24	$150.00	$3,600.00
Natural Attenuation Parameters	0	$125.00	$0.00	0	$125.00	$0.00
Operations and Maintenance, Sampling per visit (labor)	0	$1,500.00	$0.00	12	$1,500.00	$18,000.00
Quarterly/Annual Monitoring Report(s)	1	$3,000.00	$3,000.00	5	$3,000.00	$15,000.00
	Total		$96,650.00	Total		$71,625.00

Table 4-2
Groundwater Remediation Alternatives Cost Comparison

Activity Description	Option 1 Natural Attenuation			Option 2 ORC & Natural Attenuation			Option 3 Air Sparging			Option 4 Groundwater Pump and Treat		
	Qty.	Unit Price	Total	Qty.	Unit Price	Total	Qty.	Unit Price	Total	Qty.	Unit Price	Total
Construction												
Soil Removal (per CY)	0	$4.75	$0.00	0	$4.75	$0.00	0	$4.75	$0.00	0	$4.75	$0.00
Soil Disposal (per CY)	0	$300.00	$0.00	1	$300.00	$300.00	5	$300.00	$1,500.00	5	$300.00	$1,500.00
Backfill & Compact (per CY)	0	$3.00	$0.00	0	$3.00	$0.00	0	$10.00	$0.00	0	$3.00	$0.00
Sod and Turf Application (LS)	0	$400.00	$0.00	0	$400.00	$0.00	1	$400.00	$400.00	1	$400.00	$400.00
Water/Air Piping Installation (ft)	0	$30.00	$0.00	0	$30.00	$0.00	350	$30.00	$10,500.00	400	$30.00	$12,000.00
Well Head(s) Construction	0	$1,200.00	$0.00	0	$1,200.00	$0.00	3	$1,200.00	$3,600.00	2	$1,200.00	$2,400.00
Compound Construction	0	$5,500.00	$0.00	0	$5,500.00	$0.00	1	$5,500.00	$5,500.00	1	$5,500.00	$5,500.00
Gallery Installation	0	$3,500.00	$0.00	0	$3,500.00	$0.00	0	$3,500.00	$0.00	1	$3,500.00	$3,500.00
Misc Construction Materials	0	$4,000.00	$0.00	0	$4,000.00	$0.00	1	$4,000.00	$4,000.00	1	$4,000.00	$4,000.00
Equipment												
Vapor Extraction Blower Skid	0	$4,000.00	$0.00	0	$4,000.00	$0.00	0	$4,000.00	$0.00	0	$4,000.00	$0.00
Groundwater Pumps	0	$500.00		0	$500.00	$0.00	0	$500.00	$0.00	2	$500.00	$1,000.00
Air Sparging Skid	0	$6,000.00	$0.00	0	$6,000.00	$0.00	1	$6,000.00	$6,000.00	0	$6,000.00	$0.00
Carbon Drums (Vapor Phase)	0	$400.00	$0.00	0	$400.00	$0.00	0	$400.00	$0.00	0	$400.00	$0.00
Air Stripping System	0	$7,500.00	$0.00	0	$7,500.00	$0.00	0	$7,500.00	$0.00	1	$7,500.00	$7,500.00
Control Panel	0	$1,500.00	$0.00	0	$1,500.00	$0.00	1	$1,500.00	$1,500.00	1	$3,800.00	$3,800.00
ORC (lbs)	0	$15.00	$0.00	900	$15.00	$13,500.00	0	$15.00	$0.00	0	$15.00	$0.00
Subcontracts												
Electrical Subcontract	0	$3,500.00	$0.00	0	$3,500.00	$0.00	1	$3,500.00	$3,500.00	1	$3,500.00	$3,500.00
Subcontract Pavement (Sq. Ft.)	0	$6.50	$0.00	0	$6.50	$0.00	300	$6.50	$1,950.00	400	$6.50	$2,600.00
Well Installation/DPT	1	$3,000.00	$3,000.00	2	$3,000.00	$6,000.00	4	$3,000.00	$12,000.00	3	$3,000.00	$9,000.00
Laboratory Costs												
KAG (soil)	0	$450.00	$0.00	1	$450.00	$450.00	1	$450.00	$450.00	1	$450.00	$450.00
KAG (Groundwater)	105	$400.00	$42,000.00	46	$400.00	$18,400.00	34	$400.00	$13,600	165	$400.00	$66,000
EPA Method 18 (air)	0	$150.00	$0.00	0	$150.00	$0.00	0	$150.00	$0.00	0	$150.00	$0.00
Natural Attenuation Parameters	105	$175.00	$18,375.00	46	$175.00	$8,050.00	0	$175.00	$0.00	0	$175.00	$0.00
Operations and Maintenance, Sampling per visit (labor)	26	$1,200.00	$31,200.00	11	$1,200.00	$13,200.00	12	$1,500.00	$18,000.00	60	$1,500.00	$90,000.00
Quarterly/Annual Monitoring Report(s)	26	$3,000.00	$78,000.00	11	$3,000.00	$33,000.00	5	$3,000.00	$15,000.00	10	$3,000.00	$30,000.00
	Total		$172,575.00	Total		$92,900	Total		$97,500	Total		$243,150

Table 4-3
Combined Remediation Alternatives Cost Comparison Matrix

	Groundwater	Nat Att.	ORC & NA	Air Sparge	Pump And Treat
Soil	Costs	**$172,575**	**$92,900**	**$97,500**	**$243,150**
Dig & Haul	**$96,650**	$269,225	$189,550	$194,150	$339,800
SVE	**$71,625**	$244,200	$164,525	$169,125	$314,775
		Combined Costs			

5.0 REMEDIATION SYSTEM DESIGN

Following a presentation of applicable technologies, the BCT reached consensus on an integrated Air Sparging and Soil Vapor Extraction (AS/SVE) system as the remedial technology that will most effectively remediate the contaminated soil and groundwater.

5.1 VAPOR EXTRACTION WELL PLACEMENT AND DESIGN

Two horizontal vapor extraction wells (HVEWs) will be installed to a depth of five feet below the surface. The wells will be located as depicted on **Figure 5-1** and constructed as shown on **Figure 5-2**.

Based upon the soil vapor extraction pilot scale treatability study conducted at Site 16 a vapor extraction well zone of influence of 15 feet was used in the design of the soil vapor extraction system. This pilot scale test was chosen because of its proximity to Building 9. Lacking a pilot test at the site for horizontal wells, TtNUS assumed that the HVEWs would function like a series of vertical wells with small screen intervals. Additionally, the Site 16 study was conducted on section of soil with no impermeable layer on top (i.e. asphalt). Former pilot studies have indicated that sites with impermeable surfaces on top generally exhibit increased zones of influence. Therefore TtNUS believes that the 15 foot zone of influence is a conservative assumption. **Figure 5-1** illustrates the wells zone of influence in reference to the soil contamination plume presented in the SAR.

The grassed areas within the SVE zone of influence will be excavated to ten (10) inches below grade, a 30 mil HDPE membrane installed, top soil placed on top of the liner and then the area re-sodded. This liner will prevent SVE short-circuiting.

5.2 AIR SPARGING WELL PLACEMENT AND DESIGN

Three air sparging wells will be installed to a depth of twenty-five feet below the surface and sreened from 22-25 feet. The wells will be constructed as illustrated of **Figure 5-2** and installed in the locations depicted on **Figure 5-3**.

Based on the pilot test conducted at Site 5, an air sparging well radius of influence of 30 feet was assumed in the design of the air sparging system (HLA 1999). This pilot scale test was chosen

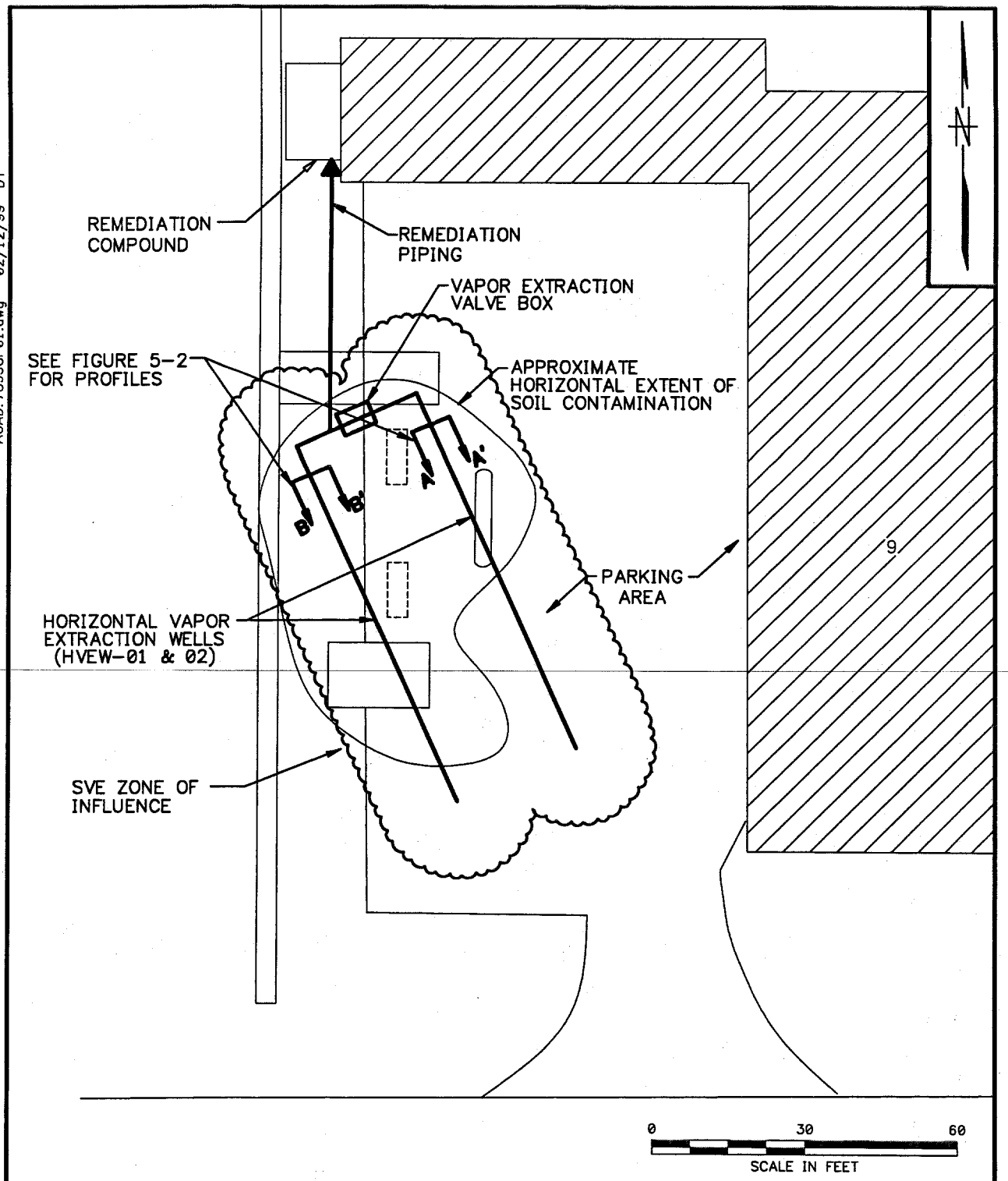

ACAD: 7895CP01.dwg 02/12/99 DT

DRAWN BY MF DATE 1/19/99	DEPARTMENT OF THE NAVY SOUTHERN DIV FACILITIES ENGINEERING COMD	SOIL VAPOR EXTRACTION SYSTEM SITE PLAN AND ZONE OF INFLUENCE REMEDIAL ACTION PLAN BUILDING 9, TANKS 9-L1 AND 9-L2 NAVAL AIR STATION CECIL FIELD JACKSONVILLE, FLORDIA	CONTRACT NO. 7895
CHECKED BY DATE			APPROVED BY DATE
COST/SCHED-AREA			APPROVED BY DATE
SCALE AS SHOWN			DRAWING NO. FIG. 5-1 REV. 0

FORM CADD NO. SDIV_AV.DWG - REV 0 - 1/20/98

ACAD:7895CD06.dwg 02/12/99 DT

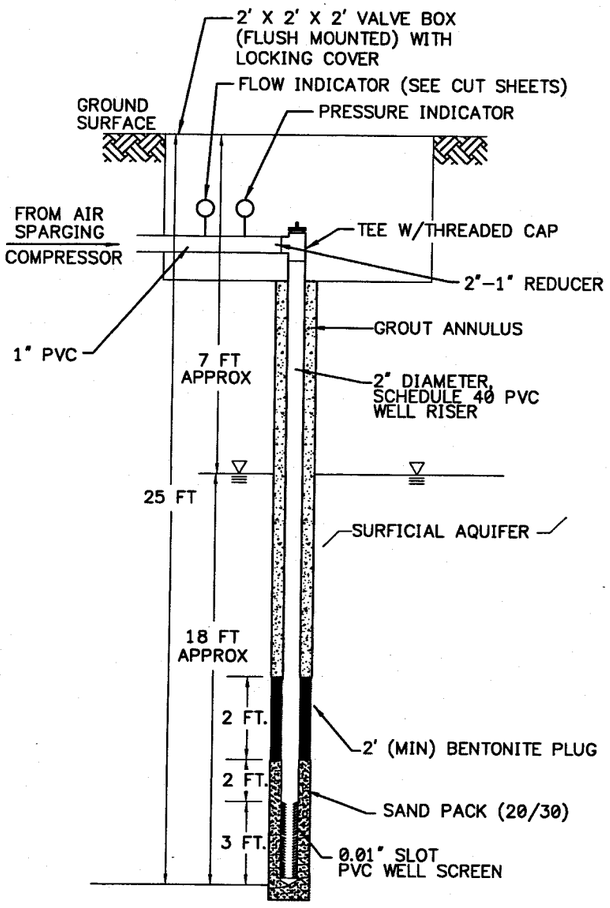

AIR SPARGING WELL DETAIL
NOT TO SCALE

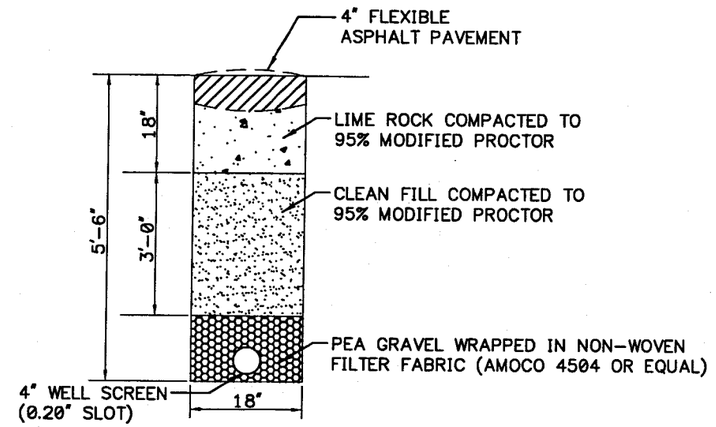

CROSS SECTION A-A'
HVEW-01 TRENCH
NOT TO SCALE

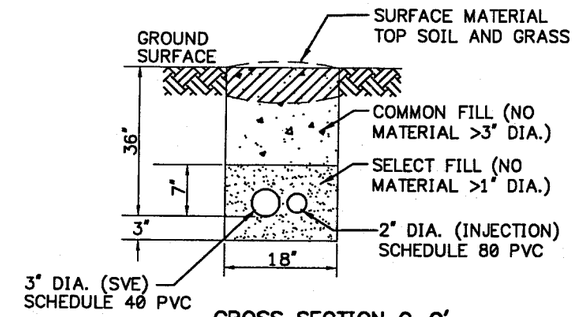

CROSS SECTION C-C'
COMBINATION PIPING TRENCH AS/SVE
(IN GRASSED AREAS)
NOT TO SCALE

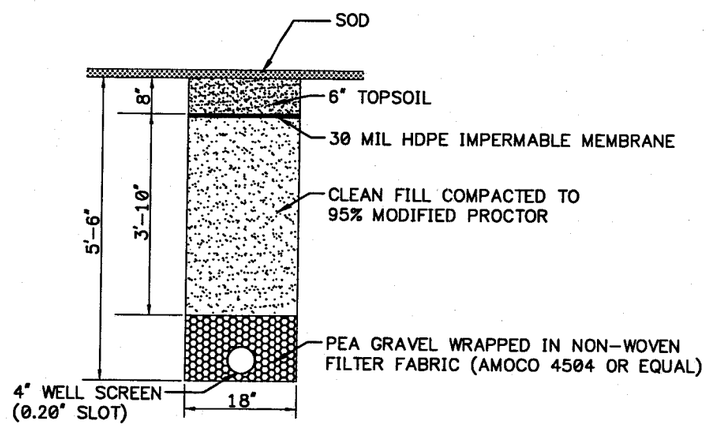

CROSS SECTION B-B'
HVEW-02 TRENCH
NOT TO SCALE

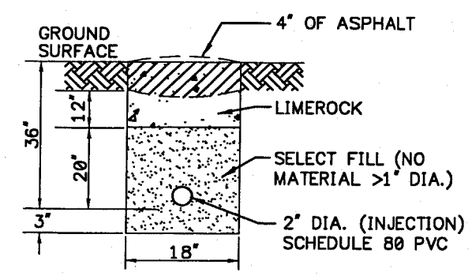

CROSS SECTION D-D'
AIR SPARGING PIPING TRENCH
(IN ASPHALT AREAS)
NOT TO SCALE

NO.	DATE	REVISIONS	BY	CHKD	APPD	REFERENCES

DRAWN BY MF DATE 1/19/99
CHECKED BY DATE
COST/SCHED-AREA
SCALE NOT TO SCALE

WELL INSTALLATION & PIPING CROSS SECTIONS
BUILDING 9, REMEDIAL ACTION PLAN
AS/SVE TREATABILITY STUDY SYSTEM
NAVAL AIR STATION CECIL FIELD
JACKSONVILLE, FLORIDA

CONTRACT NO. 7895
APPROVED BY DATE
APPROVED BY DATE
DRAWING NO. FIGURE 5-2
REV. 0

FORM CADD NO. SDIV_BH.DWG - REV 0 - 1/20/98

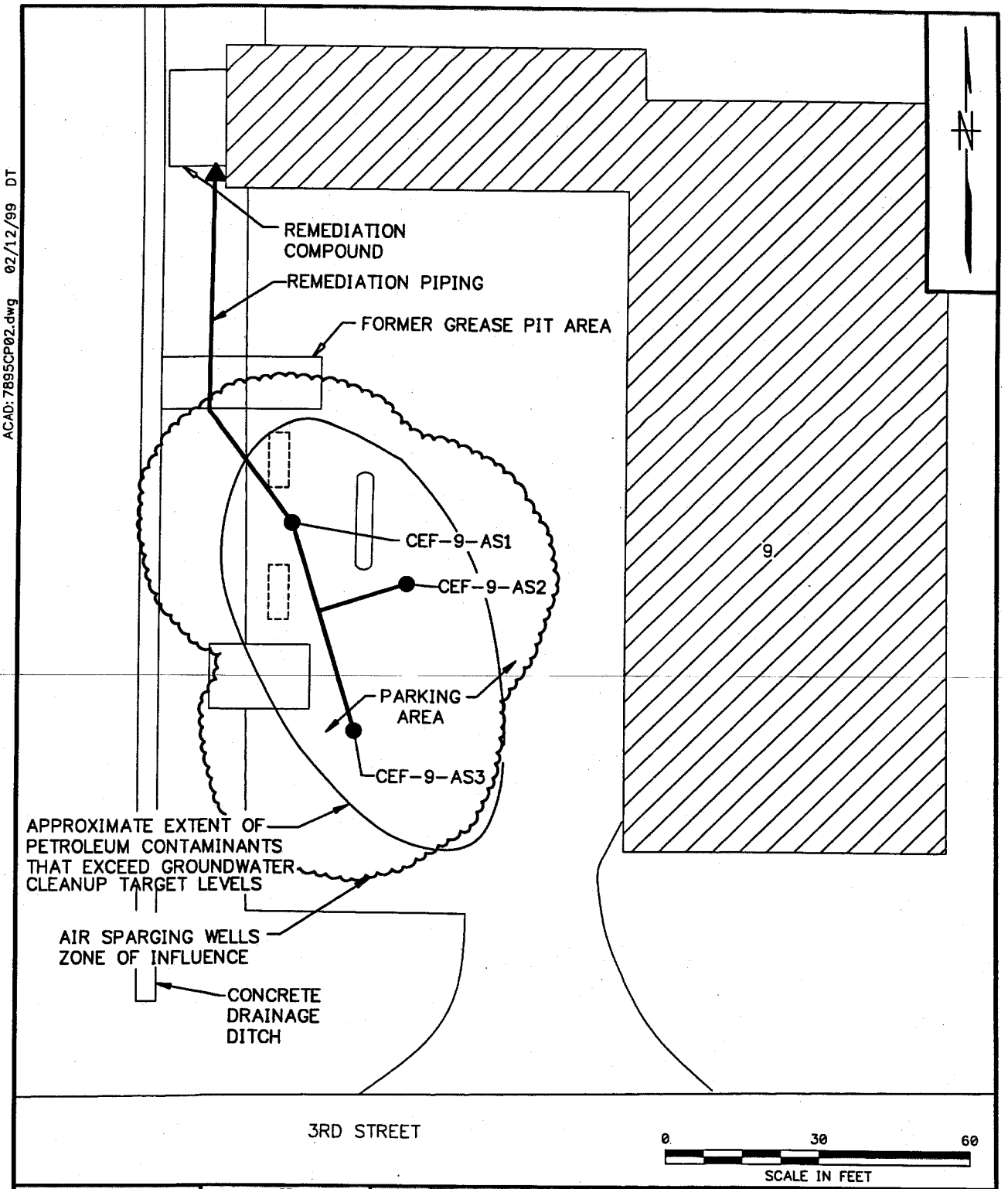

DRAWN BY MF DATE 1/20/99		AIR SPARGING SYSTEM SITE PLAN AND ZONE OF INFLUENCE REMEDIAL ACTION PLAN BUILDING 9, TANKS 9-L1 AND 9-L2 NAVAL AIR STATION CECIL FIELD JACKSONVILLE, FLORDIA	CONTRACT NO. 7895
CHECKED BY DATE			APPROVED BY DATE
COST/SCHED-AREA			APPROVED BY DATE
SCALE AS NOTED			DRAWING NO. FIGURE 5-3 REV. 0

FORM CADD NO. SDIV_AV.DWG - REV 0 - 1/20/98

because the depth of the air sparging points installed in the treatability study are approximately the same as at Building 9. The actual radius of influence observed, and used in the design, at Site 5 was 40 feet. Because of possible changes in lithology, TtNUS used 30 feet as a conservative radius of influence. **Figure 5-3** illustrates the air sparging system zone of influence in reference to the contaminated groundwater plume presented in the SAR.

5.3 SOIL VAPOR EXTRACTION BLOWER SIZING

The vacuum extraction blower will be of the positive displacement type. The vacuum extraction blower shall be capable of 300 cfm inlet capacity @ 6" Hg (Roots Model No. 45J, 7.5 Hp, 2900 rpm, or approved equal). See the design calculations for blower sizing found in **Appendix C**. The blower motor will be rated for 7.5 horsepower and operate on a 480-volt, 3-phase electrical power supply. The pump-to-motor coupling will be of the belt type with multiple sheaves to allow for adjustments in the vapor extraction rate that may be required by evolving conditions during the remedial action. The blower inlet will be equipped with a cartridge-type filter for protection against abrasive solid particles. A moisture separator with capacity of at least 55 gallons will be provided. This moisture separator will be supplied with both an adjustable vacuum relief valve and a vacuum gauge to determine the vacuum on the HVEWs.

A condensate pump capable of extracting at least 10 gpm at 10 feet of suction lift, controls, and holding tank will be supplied with the moisture separator. This condensate pump will be equipped with controls that will activate the pump when excess water accumulates into the moisture separator. Additionally the holding tank will be equipped with a high level failsafe which will shut down the condensate pump when the holding tank fills up.

The vacuum extraction blower, motor, inlet filter, moisture separator, discharge muffler, and associated controls will be mounted on a single skid. A list of the all equipment to be installed (including this skid system) is provided in at the end of this section. The condensate pump and controls will be supplied with the holding tank and field installed.

5.4 AIR SPARGING BLOWER SIZING

An air sparging blower will be used in lieu of an air compressor. Due to the number of wells and the air flow rate, a relatively small blower package can achieve the same sparging effect as an air compressor at a much lower cost. Because of the cost savings, and the calculated duration of cleanup, TtNUS has chosen to use an air sparging blower skid package

The air sparging blower will be of the positive displacement type with a discharge capacity of 30 to 36 scfm (10 – 12 cfm per well) and a pressure rating of up to 12 pounds per square inch (psi) (9 psi to depress water column and 2 psi of losses). The blower motor will be rated for 5.0 horsepower and operate on a 480-volt, 3-phase electrical power supply. The pump-to-motor coupling will be of the belt type with multiple sheaves to allow for adjustments in the air injection rate, as may be required by evolving conditions during the remedial action. The blower inlet will be equipped with a combination cartridge-type filter/silencer for protection against abrasive solid particles.

The blower will also be equipped with a combination discharge muffler/flow receiver tank. This tank will be equipped with a pressure regulating valve at the discharge, and an adjustable pressure relief valve on the tank.

The air sparging blower, motor, inlet filter, associated controls, and discharge muffler/receiver tank will be mounted on a single skid. A list of the all equipment to be installed (including this skid system) is provided at the end of this section.

5.5 SOIL VAPOR EXTRACTION SYSTEM CONTROLS

The SVE skid unit will be tied into a main control panel. This control panel will house the motor On-Off-Auto switches, motor starters, and control relays for the system. The motor starter shall be equipped with a thermal overload and 3-phase protection. The following failsafes shall be installed in the main control panel:

- Moisture separator high water failsafe
- Holding tank high water failsafe

The main control panel shall have an On-Off-Auto switch so that the operator may override the failsafe conditions. The main control panel shall also contain an interlock with the air sparging system such that the air sparging blower will be shut down if the SVE blower is de-energized. Included in the main control panel will be controls for the operation of the condensate pump. The moisture sparator will be equipped with a "high" and "low" level switches to control the operation of the condensate pump. The moisture separator will be supplied with a "high-high" level switch which will shut down the SVE system in the event of high water level in the moisture separator. The SVE system process and instrumentation diagram (P&ID) is presented in **Figure 5-4.**

ACAD: 7895PF03.dwg 02/12/99 DT

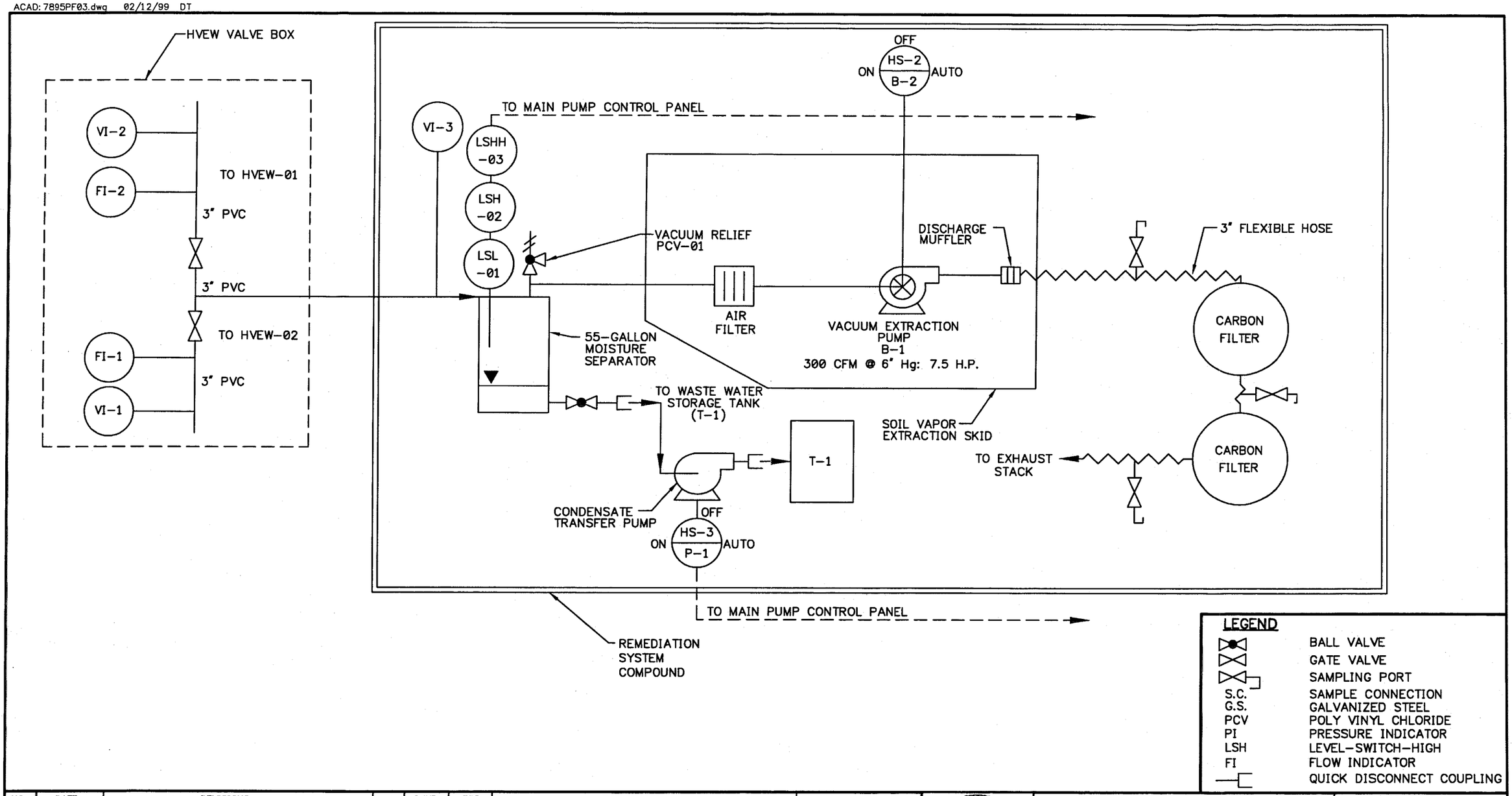

LEGEND

	BALL VALVE
	GATE VALVE
	SAMPLING PORT
S.C.	SAMPLE CONNECTION
G.S.	GALVANIZED STEEL
PCV	POLY VINYL CHLORIDE
PI	PRESSURE INDICATOR
LSH	LEVEL-SWITCH-HIGH
FI	FLOW INDICATOR
	QUICK DISCONNECT COUPLING

NO.	DATE	REVISIONS	BY	CHKD	APPD	REFERENCES

DRAWN BY MF DATE 1/19/99
CHECKED BY DATE
COST/SCHED-AREA
SCALE NONE

VAPOR EXTRACTION AND TREATMENT PROCESS AND INSTRUMENT DIAGRAM
BUILDING 9, REMEDIAL ACTION PLAN
NAVAL AIR STATION, CECIL FIELD
JACKSONVILLE, FLORIDA

CONTRACT NO. 7895
APPROVED BY DATE
APPROVED BY DATE
DRAWING NO. FIGURE 5-4
REV. 0

FORM CADD NO. SDIV_BH.DWG - REV 0 - 1/20/98

5.6 AIR SPARGING SYSTEM CONTROLS

The air sparging skid unit will be tied into the above referenced main control panel. This control panel will house On-Off-Auto switches, motor starters, and control relays for the system. The motor starters shall be equipped with a thermal overload and three phase protection. In the event that the SVE blower shuts down, an interlock shall automatically shut down the air sparging blower motor.

The main control panel shall have an On-Off-Auto with manual override switch so that the operator may override the interlock condition during star-up or testing.

Figure 5-5 illustrates the air sparging system P&ID.

5.7 AS/SVE PIPING

The SVE piping under ground shall consist of 3" SCH 40 PVC piping. The discharge piping (i.e. inside the remediation compound) shall consist 3" diameter flexible rubber hose equipped with quick disconnects. This apparatus will allow for expedient change outs or removal of the carbon cannisters.

The air sparging piping shall consist of both 2" galvanized steel piping and 2" SCH 80 PVC piping. All piping within the remediation compound and under ground piping to the AS/SVE valve vault shall be 2" galvanized. All piping from the valve vault to the air sprging wells shall be 2" SCH 80 PVC. As illustrated on the equipment cut sheets in **Appendix E**, there will be a significant temperature rise on the pressure side of the blower. This heat must be dissipated. Accordingly, the piping within the remediation compound shall be equipped with exterior shielding to protect workers from the heat hazard yet still allow heat dissipation.

At each well head, an air flow indicator, an air-flow regulator, and pressure gauge will be installed. The flow indicator will be rated in CFM and the pressure rated in psi. Immediately before the flow indicator, a gate valve will be installed to regulate air-flow into the air sparging well.

Figures 5-6 and 5-7 illustrate the combined AS/VE system conceptual site plan and well cross section respectively. **Figures 5-8 and 5-9** illustrate a conceptual compound layout, and a single line electrical diagram, respectively.

ACAD:7895PF01.dwg 02/12/99 HJP

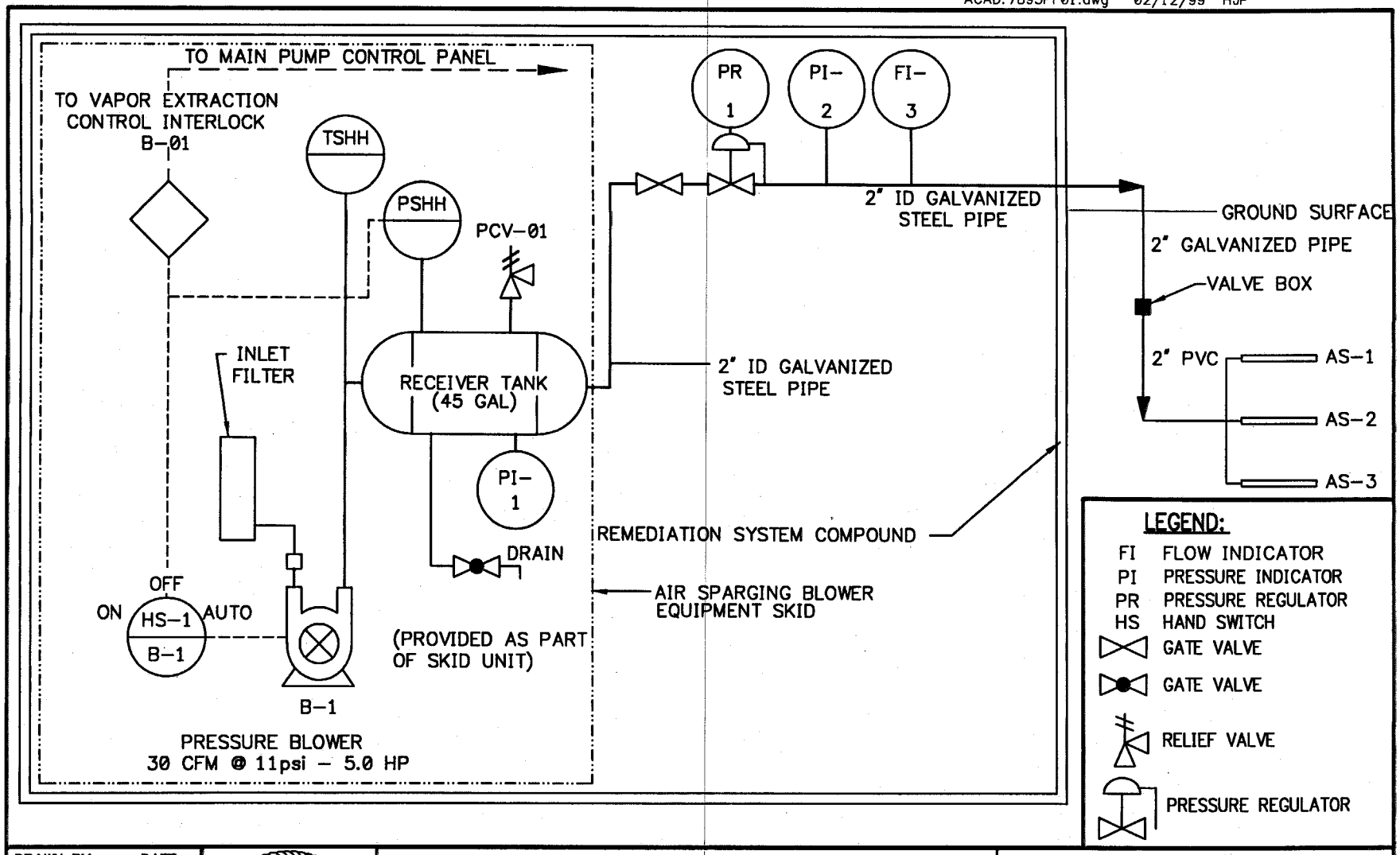

DRAWN BY MF 1-19-99 DATE	AIR SPARGING SYSTEM PROCESS AND INSTRUMENT DIAGRAM BUILDING 9, REMEDIAL ACTION PLAN NAVAL AIR STATION, CECIL FIELD JACKSONVILLE, FLORIDA	CONTRACT NO. 7895	
CHECKED BY DATE		APPROVED BY DATE	
COST/SCHED-AREA		APPROVED BY DATE	
SCALE NONE		DRAWING NO. FIGURE 5-5	REV. 0

FORM CADD NO. SDIV_AH.DWG - REV 0 - 1/20/98

ACAD: 7895CM14.dwg 02/12/99 DT

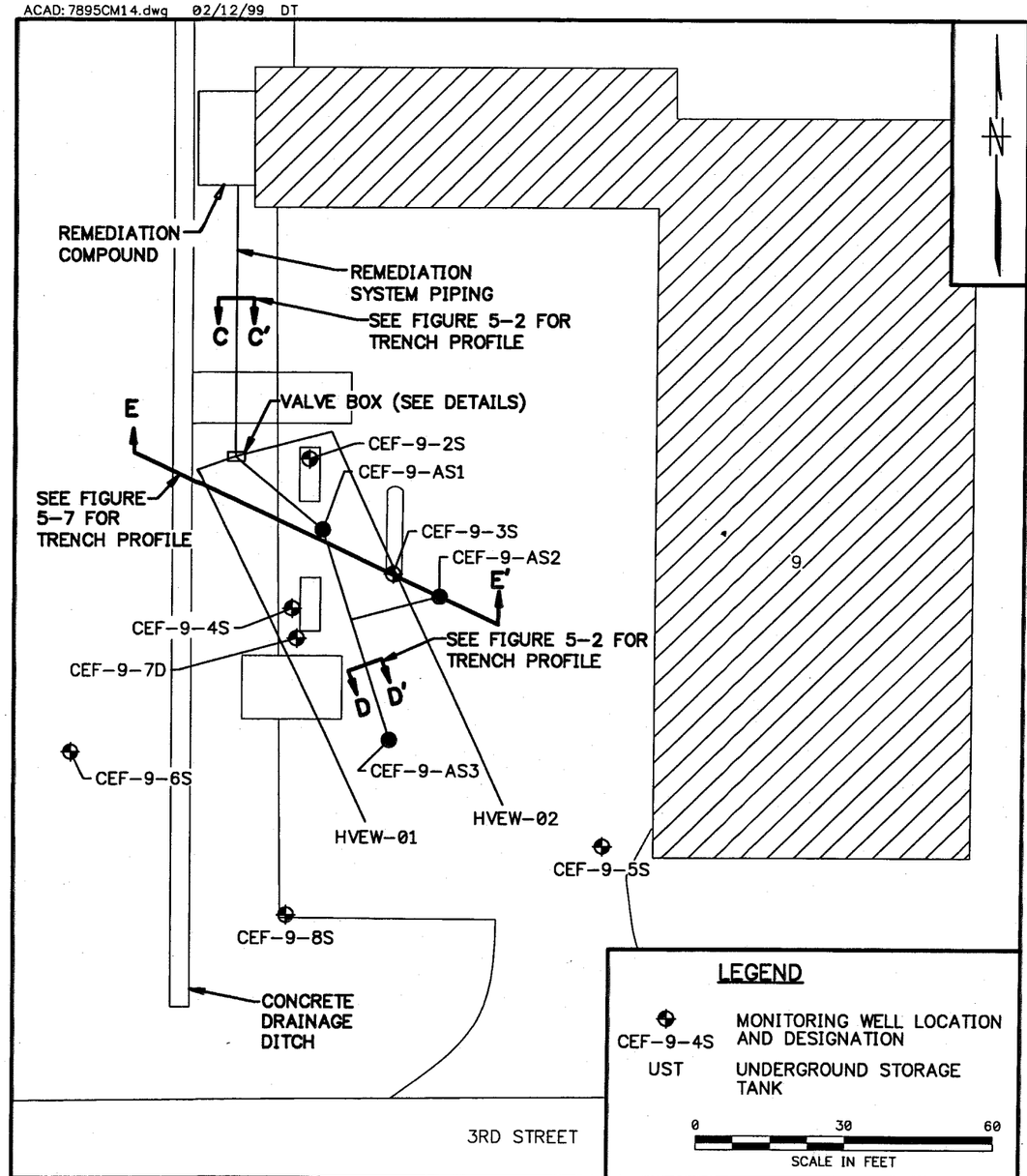

LEGEND

CEF-9-4S	MONITORING WELL LOCATION AND DESIGNATION
UST	UNDERGROUND STORAGE TANK

0 30 60
SCALE IN FEET

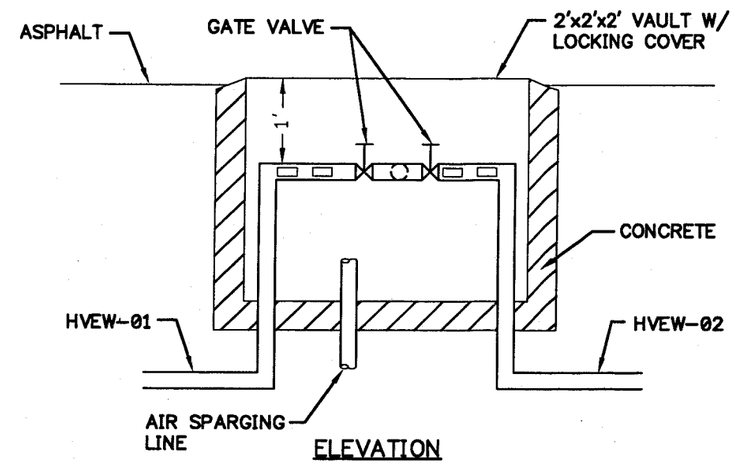

ELEVATION

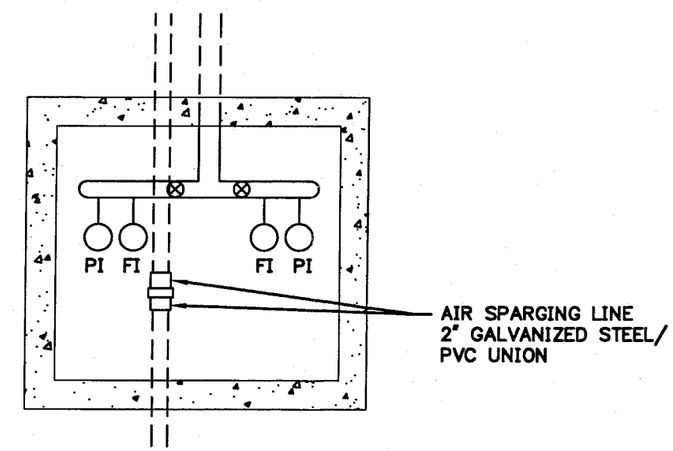

PLAN

VALVE BOX DETAIL

NOT TO SCALE

NO.	DATE	REVISIONS	BY	CHKD	APPD	REFERENCES

DRAWN BY DLT DATE 2/12/99
CHECKED BY DATE
COST/SCHED-AREA
SCALE AS NOTED

AS/SVE CONCEPTUAL DESIGN SITE PLAN
REMEDIAL ACTION PLAN
BUILDING 9, TANKS 9-L1 AND 9-L2
NAVAL AIR STATION CECIL FIELD
JACKSONVILLE, FLORIDA

CONTRACT NO. 7895
APPROVED BY DATE
APPROVED BY DATE
DRAWING NO. FIGURE 5-6
REV. 0

FORM CADD NO. SDIV_BH.DWG - REV 0 - 1/20/98

ACAD: 7895CD04.dwg 02/12/99 HJP

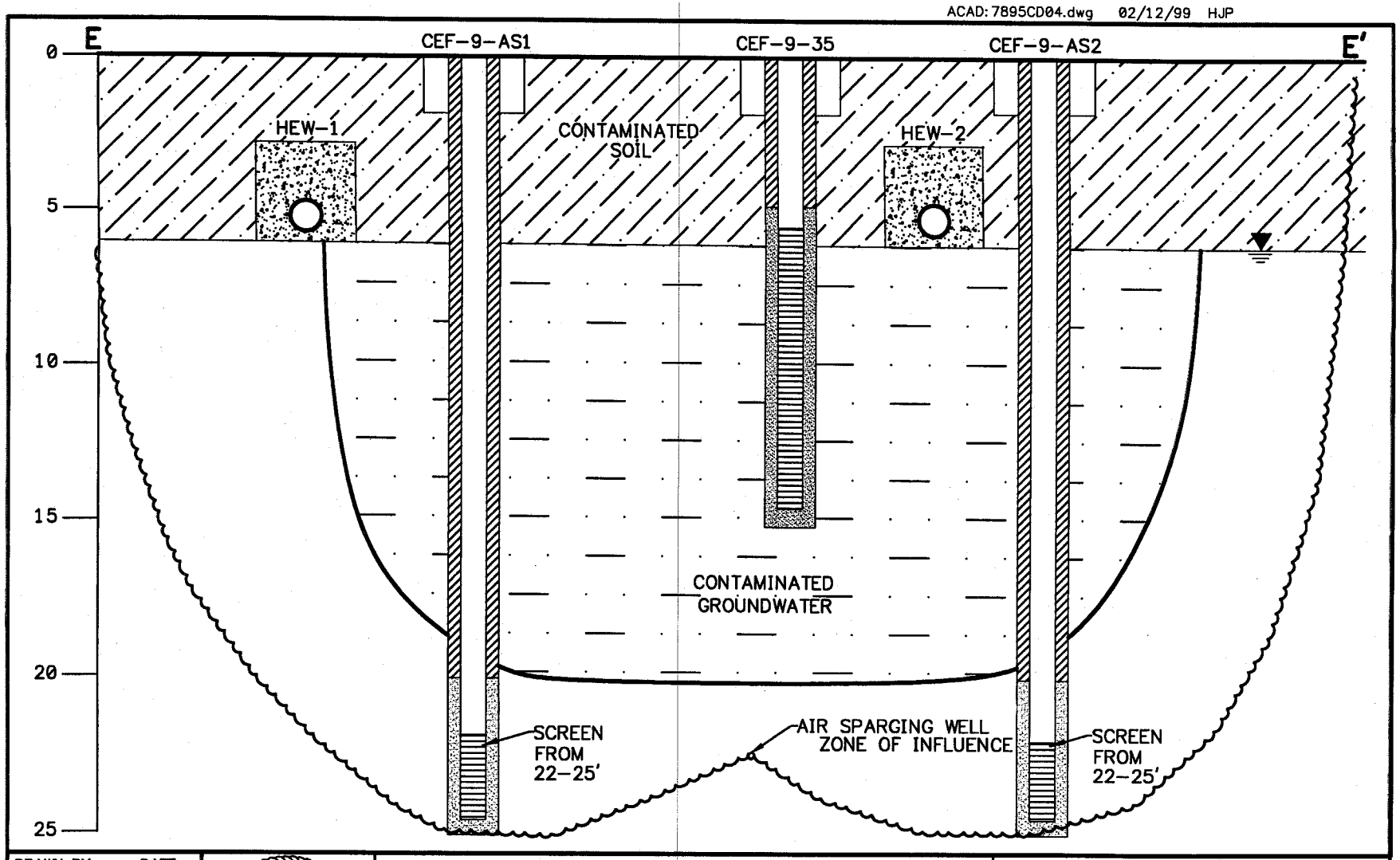

DRAWN BY MF	DATE 1/20/99	AS/SVE CONCEPTUAL DESIGN PROFILE BUILDING 9, REMEDIAL ACTION PLAN NAVAL AIR STATION CECIL FIELD JACKSONVILLE, FLORIDA	CONTRACT NO. 7895
CHECKED BY	DATE		APPROVED BY / DATE
COST/SCHED-AREA			APPROVED BY / DATE
SCALE NONE			DRAWING NO. FIGURE 5-7 / REV. 0

DEPARTMENT OF THE NAVY ★ SOUTHERN DIV FACILITIES ENGINEERING COMD ★

FORM CADD NO. SDIV_AH.DWG - REV 0 - 1/20/98

ACAD:7895PP01.dwg 02/12/99 DT

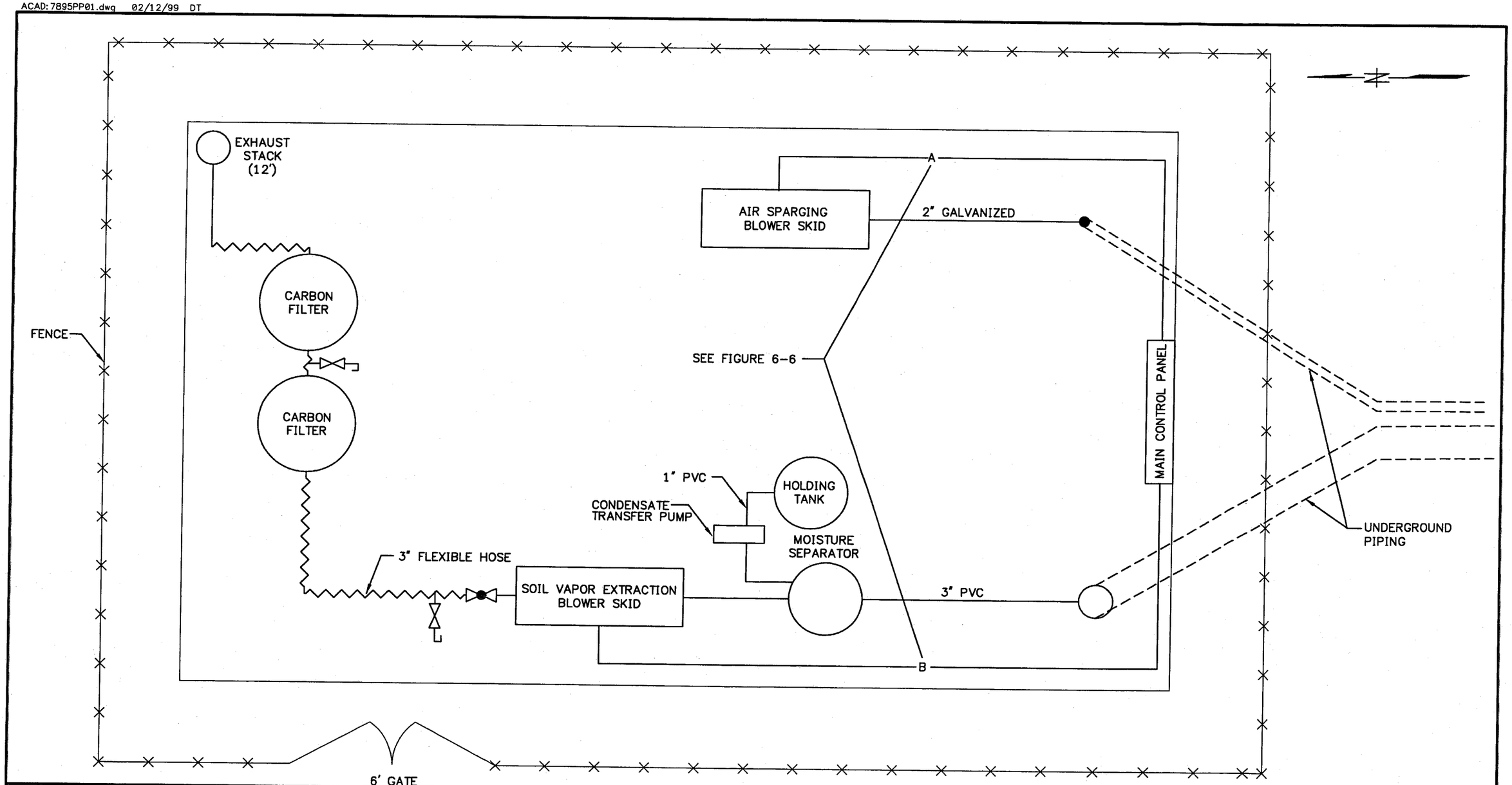

NO.	DATE	REVISIONS	BY	CHKD	APPD	REFERENCES

DRAWN BY MF DATE 1/19/99
CHECKED BY DATE
COST/SCHED-AREA
SCALE NOT TO SCALE

CONCEPTUAL AIR SPARGING/VAPOR EXTRACTION
TREATMENT COMPOUND LAYOUT
BUILDING 9, REMEDIAL ACTION PLAN
NAVAL AIR STATION CECIL FIELD
JACKSONVILLE, FLORIDA

CONTRACT NO. 7895
APPROVED BY DATE
APPROVED BY DATE
DRAWING NO. FIGURE 5-8
REV. 0

FORM CADD NO. SDV_BH12.DGN – REV 0 – 1/20/98

ACAD:7895EZ01.dwg 02/12/99 DT

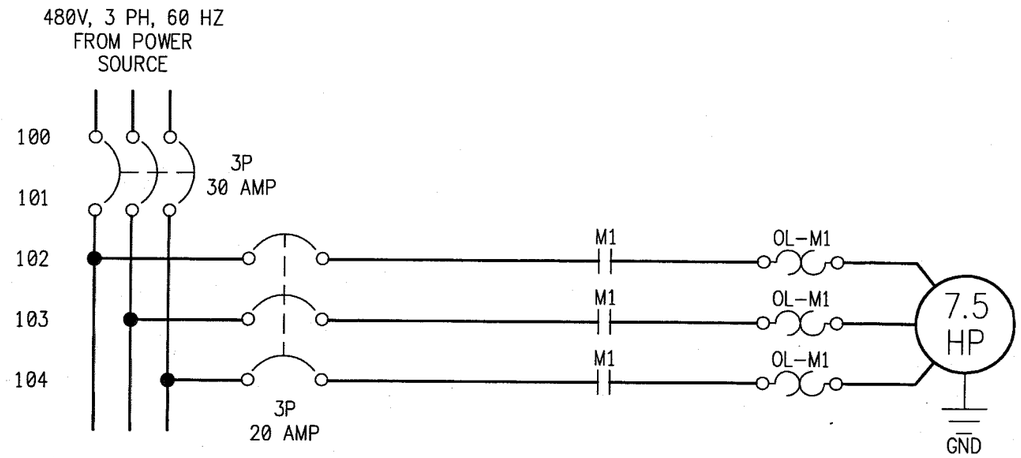

VACUUM EXTRACTION PUMP SCHEMATIC DIAGRAM

ROOTS FRAME SIZE 45J OR EQUAL, 300 SCFM, 6 Hg, (OR EQUAL)

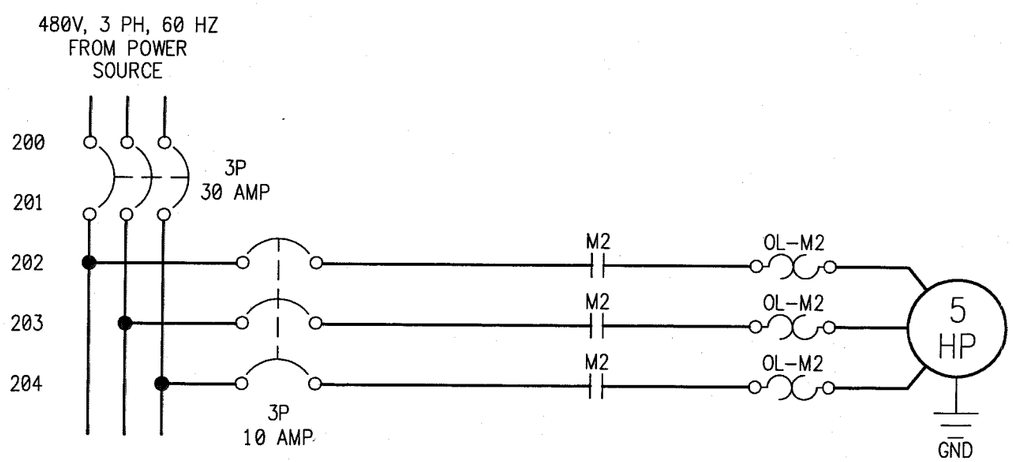

AIR SPARGING BLOWER SCHEMATIC DIAGRAM

ROOTS FRAME SIZE 32 OR EQUAL, 12 PSI (OR EQUAL)

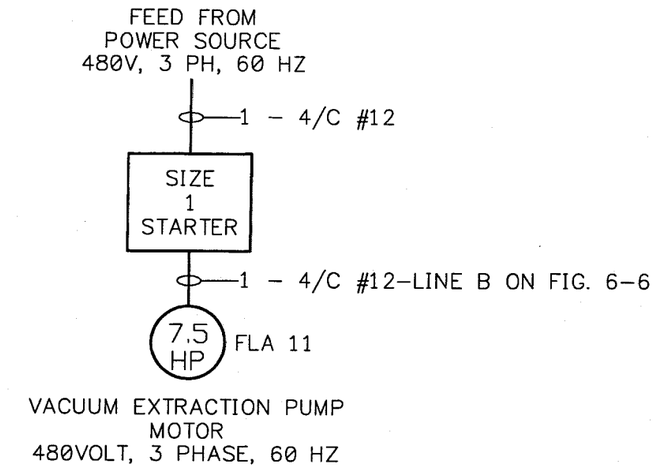

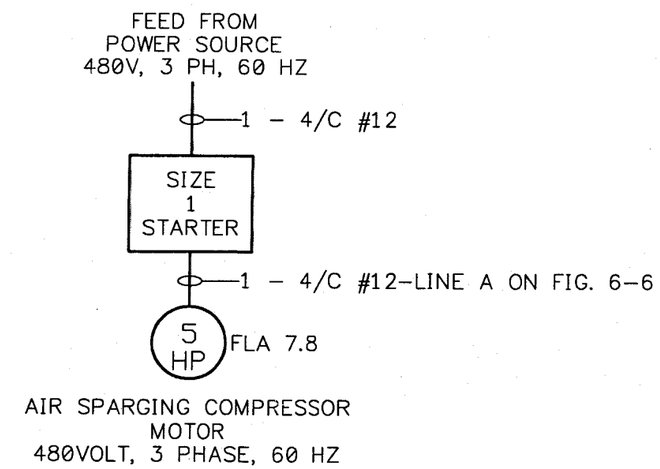

SINGLE LINE DIAGRAM

NO.	DATE	REVISIONS	BY	CHKD	APPD	REFERENCES

DRAWN BY MF DATE 1/19/99
CHECKED BY DATE
COST/SCHED-AREA
SCALE N.T.S.

SINGLE LINE DIAGRAM AND
ELECTRICAL SCHEMATIC DIAGRAM
BUILDING 9, REMEDIAL ACTION PALN
NAVAL AIR STATION CECIL FIELD
JACKSONVILLE, FLORIDA

CONTRACT NO. 7895
APPROVED BY DATE
APPROVED BY DATE
DRAWING NO. FIGURE 5-9
REV. 0

FORM CADD NO. SDIV_BH.DWG - REV 0 - 1/20/98

5.8 BLOWER OFF-GAS TREATMENT

The Florida Department of Environmental Protection (FDEP) requires blower off-gas treatment for at least thirty (30) days, and until the blower's total VOC effluent discharge is less than 13.7 lbs/day. Currently, the estimated emission rate is 7.5 lb/day based on limited data on the extent of contamination. Because of the potential for a higher VOC emission rate, especially during the initial phase of operation, rental of an vapor-phase activated carbon adsorption system is proposed. Therefore, two (2) 1,000 pound activated carbon canisters will be installed in series on the discharge end of the blower and operated over a duration of at least 30 days. After the 30 day period is completed, future air treatment will only be needed if the total VOC's emitted are greater than 13.7 lbs/day.

Sampling ports for the blower discharge will be installed before, after and in between the carbon vessels. Air samples from these ports will be sampled to evaluate the future need for carbon treatment or to determine when the carbon canisters need to be changed. Using the estimated VOC emission rate of 7.5 lb/day, activated carbon usage is conservatively estimated to be 42.5 lb/day.

SOIL VAPOR EXTRACTION SYSTEM EQUIPMENT SPECIFICATIONS
BUILDING 9 REMEDIAL ACTION PLAN
NAS CECIL FIELD
JACKSONVILLE, FLORIDA

Item	Specifications
Soil Vapor Extraction Blower (B-2) Positive Displacement Type (Roots Frame Size 45J or equal) blower shall be installed 18" above the floor	Positive displaceement type, belt drive 300 scfm @ 6 in-Hg, 7.5 HP motor, 480 volt, 3 ph Equipped w/ 1 micron inlet filter, pressure switch, temperature switch and discharge muffler
Moisture Separator	Capacity of no less than 55 gallons, capable of handling 300 cfm. Supplied with high, low, and high-high level switches.
Granular Activated Carbon System	Two (2) 1,000 lb capacity GAC adsorbers. Equipped with NPT fittings and equipped with forklift skids. Inlets to carbon vessels shall be fitted with a galvanized nipple and quick disconnect coupling.
Flow Meter (FI-3)	0 – 500 cfm main SVE piping inside compound.
Flow Meter (FI-1, FI-2)	0 – 300 cfm SVE piping inside valve box
Holding Tank (T-1)	120-gallon polyethylene tank supplied with condensate pump and high level failsafe swich.
Condensate Pump (P-1)	Rotary gear pump with capacity of 10 gpm at 10 feet of suction lift
Vacuum Relief Valve (PCV-01)	Adjustable between 3.0 in Hg to 8.0 inHg
Vacuum Gauges (PI-1, 2, 3)	0 – 100 inches water
Aboveground Pipe (Vacuum Side)	3" SCH 40 PVC
Aboveground Pipe (Pressure Side)	3" Flexible Rubber Hose fitted with quick disconnect couplings.
Aboveground Fittings/Valves	3" Steel or Brass
Underground pipe and fittings	3" ID Schedule 40 PVC
Vapor Extraction well pipe and fittings	3" ID Schedule 40 PVC pipe, Brass fittings
Vapor Extraction Wells	4" ID Sch 40 PVC w/ .020 slot screen

AIR SPARGING SYSTEM EQUIPMENT SPECIFICATIONS
BUILDING 9 REMEDIAL ACTION PLAN
NAS CECIL FIELD
JACKSONVILLE, FLORIDA

Item	Specifications
Air Sparging Blower (B-1) Positive Displacement Type (Roots Frame Size 32 or equal) blower shall be situated 18" above the floor	Positive displacement type, belt drive 30 scfm @ 12 psi, 5.0 HP motor, 480 volt, 3 ph Equipped w/ 1 micron inlet filter, and discharge muffler/receiver tank.
Flow Meter (FI-4)	0 – 50 cfm in air sparging header
Flow Meter (FI-5, 6, 7)	0 – 20 cfm in each air sparging well
Pressure Regulator (PR-1)	15 psi maximum
Pressure Gauges (PI-4-8)	0 – 25 psi liquid filled (air sparging receiver tank/discharge muffler, and well heads)
Aboveground Pipe (HOT)	2" Galvanized Steel
Aboveground Fittings/Valves (HOT)	2" Steel or Brass
Underground pipe and fittings (COLD)	2" ID Schedule 80 PVC
Air Sparging well pipe and fittings (COLD)	2" ID Schedule 80 PVC pipe, Brass fittings
Air Sparing Wells	2" ID Schedule 40 PVC w/ .010 slot screen

SECTION 6.0 START UP AND OPERATIONS AND MAINTENANCE

The following sections establish procedures for the start-up of the system, the routine operation and maintenance of the remediation equipment, and monitoring of operating parameters. The final sub-section establishes the procedures for final system deactivation.

6.1 SYSTEM START-UP

Following final inspection, and acceptance by the Navy, the system will be set for initial start-up. Approximately one week prior to start-up, a full round of water levels will be collected. During this action the air sparging wells in the area will also be surveyed in reference to elevation to establish a baseline top of casing elevation for each well. Following collection of water levels, all of the wells will be sampled and analyzed as referenced in the following section. This round of analytical will set the baseline contaminant profiles and comparable operating parameters (i.e. dissolved oxygen, water levels, etc.).

System start-up will commence approximately one week following the initial round of sampling. The following steps outline the start-up procedures.

1. Inspect all the equipment and ensure that all moving parts are free from obstructions. Then manually "break free" both the air sparging and soil vapor extraction blower lobes.
2. Energize the control panel disconnect switch. Confirm that the voltage supplied to the panel is 480 volt.
3. Energize the soil vapor extraction blower. Adjust the vacuum relief valve such that take up water is minimized.
4. From the AS/SVE valve vault adjust the valves from each HVEW well such that the air-flow from each leg is balanced (approximately the same)
5. Let the SVE blower operate for at least two hours. During this two-hour period monitor the amount of water accumulated in the moisture separator. Gradually increase the vacuum applied to the moisture separator until the maximum vacuum is applied. However if water accumulation in the moisture separator is significant, bleed dilution air to reduce vacuum levels until water take up in minimized.
6. After the SVE system has stabilized and is operating nominally, energize the air sparging blower.
7. Adjust the pressure regulating valve on the pressure piping header to equal the water column drop as calculated from the above referenced water levels.

8. Once the pressure in each of the air injection wells is recorded for future use, record the flow of air to each of the air sparging wells. A flow of 10 scfm per air sparging well has been chosen for this system. Adjust the flowmeters such that a maximum of 10 scfm is injected into the well. Please note that because of potential variations in the lithology of the locations of each of the wells, the 10 scfm flow rate is only a target level that may not be readily achieveable, therefore open the flowmeters to their maximum output, and then record the reading.
9. Allow the system to operate for approximately two hours without adjustment, and then record the readings on each of the pressure gauges and flowmeters. Compare these with the initial start-up.
10. Adjust the flowmeters and pressure regulators to match as closely as possible those readings in the beginning.
11. Allow the system to operate another hour, and then repeat steps #8 and #9 until pressure, vacuum and flow readings have stabilized to within +/- 10% or some acceptable variation.
12. The system is now in normal operation. Record all pressures, vacuums, and flows for comparison at monthly visits.
13. From inside the control panel, record the voltage across each the sparge and vapor extraction motors. Measure the amperage draw on each of the motors and record. Compare these values to those supplied in the operations manual for each and confirm that they are within normal operating parameters.

6.2 SYSTEM OPERATIONS AND MAINTENANCE

This system requires little operation and maintenance (O&M). O&M will be conducted in accordance with the manufacturers suggested O&M practices as supplied with the purchase of the equipment However, at a minimum the following will be conducted at monthly visits to the site:

1. While the system is in operation, collect a full round of water levels from the existing monitoring wells.
2. While the system is in operation record the air sparging flowrates and pressures, soil vapor extraction system vacuums and flow rates, and the amount (if any) of water collected in the moisture separator.
3. While the system is in operation, collect an air sample from before, after, and in-between the carbon canisters. The samples will be collected in containers suitable to analyze for EPA Method 18 constituents.

4. A 150 gallon polyethylene tank will be supplied at the treatment compound to collect the moisture separator water. If there is significant water in the tank, it will pumped out and either be transported to the NASCF WWTP or off site for disposal. Test the moisture separator high water failsafe using a jumper within the control panel. While the failsafe is tripped, de-energize the SVE blower motor. Add blower oil if needed, then grease the bearings. Visually check the particle filter for signs of dust or debris accumulation and replace if necessary. Record the amount of oil added and the condition of the filter. Periodically replace the oil per manufacturer's instructions. Fully inspect the condition of the entire blower unit (belt tension, rust, etc.) Then reset the failsafe and energize the SVE blower.
5. While the air sparging blower is in operation record all of the pressures and flows in each of the air injection and vapor extraction wells.
6. Test the air sparging blower receiver tank high water failsafe using a jumper within the control panel. While the compressor failsafe is tripped de-energize the compressor circuit. Add blower oil if needed, then grease the bearings. Check the particle filter and replace if necessary. Record the amount of oil added and the condition of the filter. Periodically replace the oil per manufacturer's instructions. Fully inspect the condition of the entire blower unit. Then reset the failsafe and energize the SVE blower. Drain condensate water out of the pressure tank, and transfer the water under air pressure tothe holding tankfor disposal. Inspect the condition of the entire unit (belt tension, rust, etc.). Then reset the failsafe and energize the air sparging blower.
8. Adjust the pressures, vacuums, and flowrates to the original operational levels established .
9. Maintain good house-keeping measures for the entire remediation system compound, picking up trash, cutting weeds as necessary.

Two 5-gallon buckets shall be provided within the remediation system compound. One of these buckets will be used for the storage of spent blower oil. This bucket will be labeled as such, and a copy of the MSDS maintained on site. The second 5-gallon bucket will contain sorbent pads and other miscellaneous spill containment items. Both of these buckets will be periodically sent for off-site recycle/ disposal as appropriate.

6.3 SYSTEM DE-ACTIVATION

Upon notification from the partnering team that the site is going into either a No Further Action or Monitoring Only status, the system will be de-activated. The following steps shall be followed during the system de-activation:

1. De-energize the air sparging compressor/blower and allow to cool down.
2. Bleed the blower/compressor tank of excess pressure and condensate.
3. Allow the SVE blower to operate alone for three hours. The purpose of this is to allow <u>any</u> contaminant vapors time to migrate into the soils and be removed via the SVE blower.
4. De-energize the SVE blower and allow to cool down.
5. Bleed the moisture separator tank of excess vacuum and condensate.
6. Seal the tops of the carbon canisters.
7. De-energize the control panel via the service disconnect.
8. Transport and dispose of the M/S water collected at the NASCF WWTP.

SECTION 7.0 MONITORING OF REMEDIAL PROGRESS

The following paragraphs detail the sampling and analytical practices to be conducted in order to monitor the effectiveness of the remedial action.

7.1 SHALLOW MONITORING WELL LOCATION AND DESIGN

A shallow monitoring well will be installed within the groundwater contaminant plume delineated in the SAR. The well will be placed in between the source plume wells and the existing down gradient monitoring well. The purpose of this well is two fold. First it will further delineate the groundwater plume, and second, it will act as a monitoring point for the edge of the plume.

The shallow monitoring well shall be installed during the air sparging well installation in accordance with the well construction diagram presented on **Figure 7-1**. The well will be installed to a total depth of 14 feet bls. The well will be screened from 14 – 4 ft bls, with the sand pack from 14 – 13.5 ft bls. A 6" bentonite seal will be placed from 13 to 13.5 ft bls, and a neat grout will be placed in the remaining borehole. **Figure 7-2** illustrates the location of the well in reference to the source well area, and the down gradient monitoring well. This well shall be designated **CEF-9-9S**.

7.2 SELECTED GROUNDWATER MONITORING WELLS AND SAMPLING FREQUENCY

Monitoring wells CEF-9- 2S, 3S, 9S, and 5S will be sampled to monitor the progress of the remediation system. The wells will be sampled prior to system start-up to establish a contaminant and water quality baseline for future comparison. The groundwater samples will be analyzed for the parameters listed in Section 8.4. The above referenced wells will be sampled approximately quarterly. Monitoring well CEF-9-7D (deep well) will be sampled semi-annually (every other quarter as listed above) to insure that vertical migration is not occurring.

7.3 SELECTED SOIL MONITORING POINTS AND FREQUENCY

During installation of the horizontal vapor extraction wells, one soil sample from within the most contaminated portion of the plume will be collected. This sample will be analyzed for KAG parameters. During the quarterly monitoring well sampling events a soil boring will be advanced in the area closest to the above referenced point, a sample will be collected from immediately above the water table and analyzed for KAG parameters. When the laboratory analyses indicate

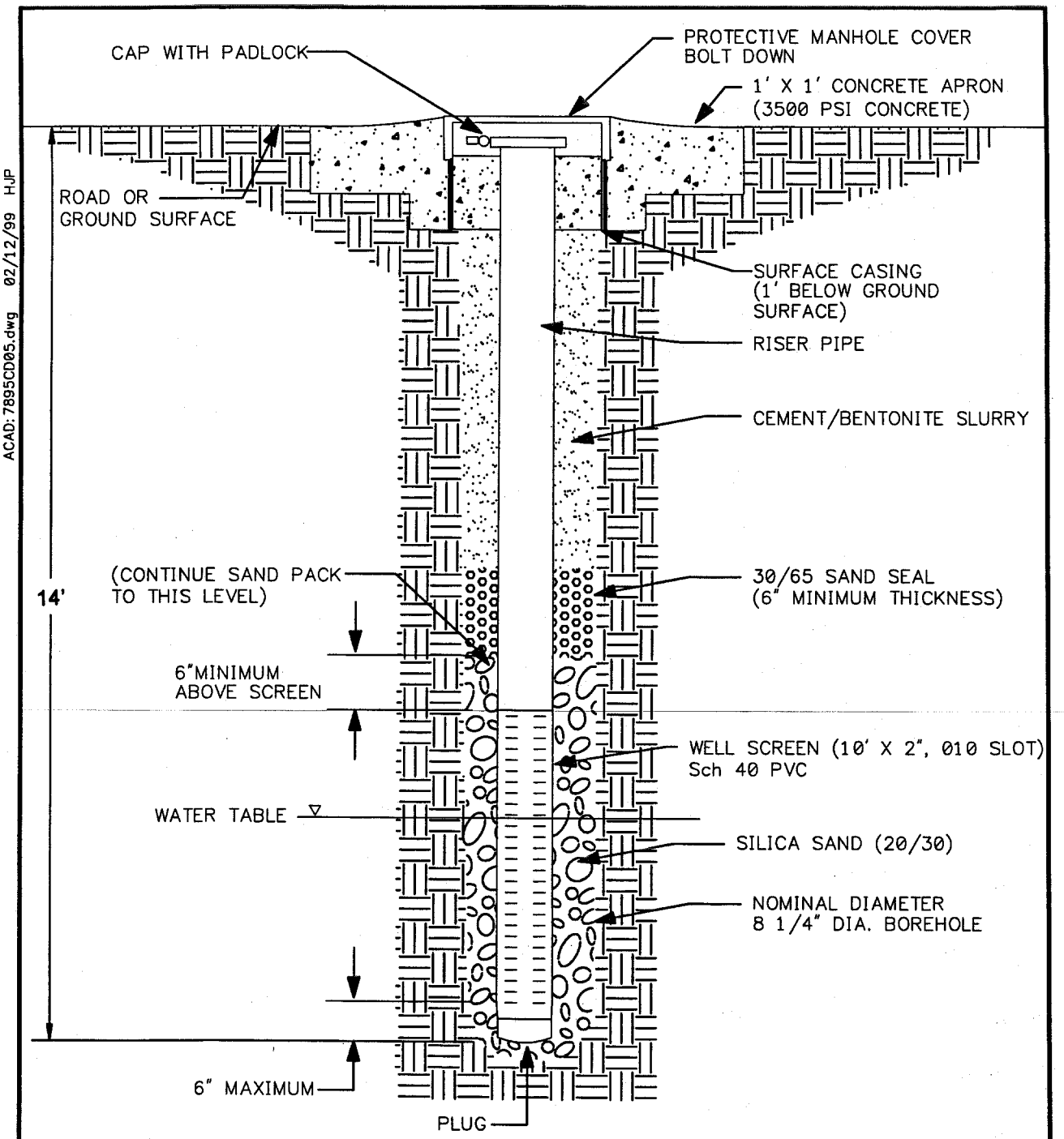

TYPICAL FLUSHMOUNT CONSTRUCTION
SHALLOW MONITORING WELL
N.T.S.

ACAD: 7895CD05.dwg 02/12/99 HJP

DRAWN BY KW DATE 2/4/99	DEPARTMENT OF THE NAVY SOUTHERN DIV FACILITIES ENGINEERING COMD	ADDITIONAL MONITORING WELL CONSTRUCTION REMEDIAL ACTION PLAN BUILDING 9, TANKS 9-L1 AND 9-L2 NAVAL AIR STATION CECIL FIELD JACKSONVILLE, FLORDIA	CONTRACT NO. 7895
CHECKED BY DATE			APPROVED BY DATE
COST/SCHED-AREA			APPROVED BY DATE
SCALE N.T.S.			DRAWING NO. FIGURE 7-1 / REV. 0

FORM CADD NO. SDIV_AV.DWG - REV 0 - 1/20/98

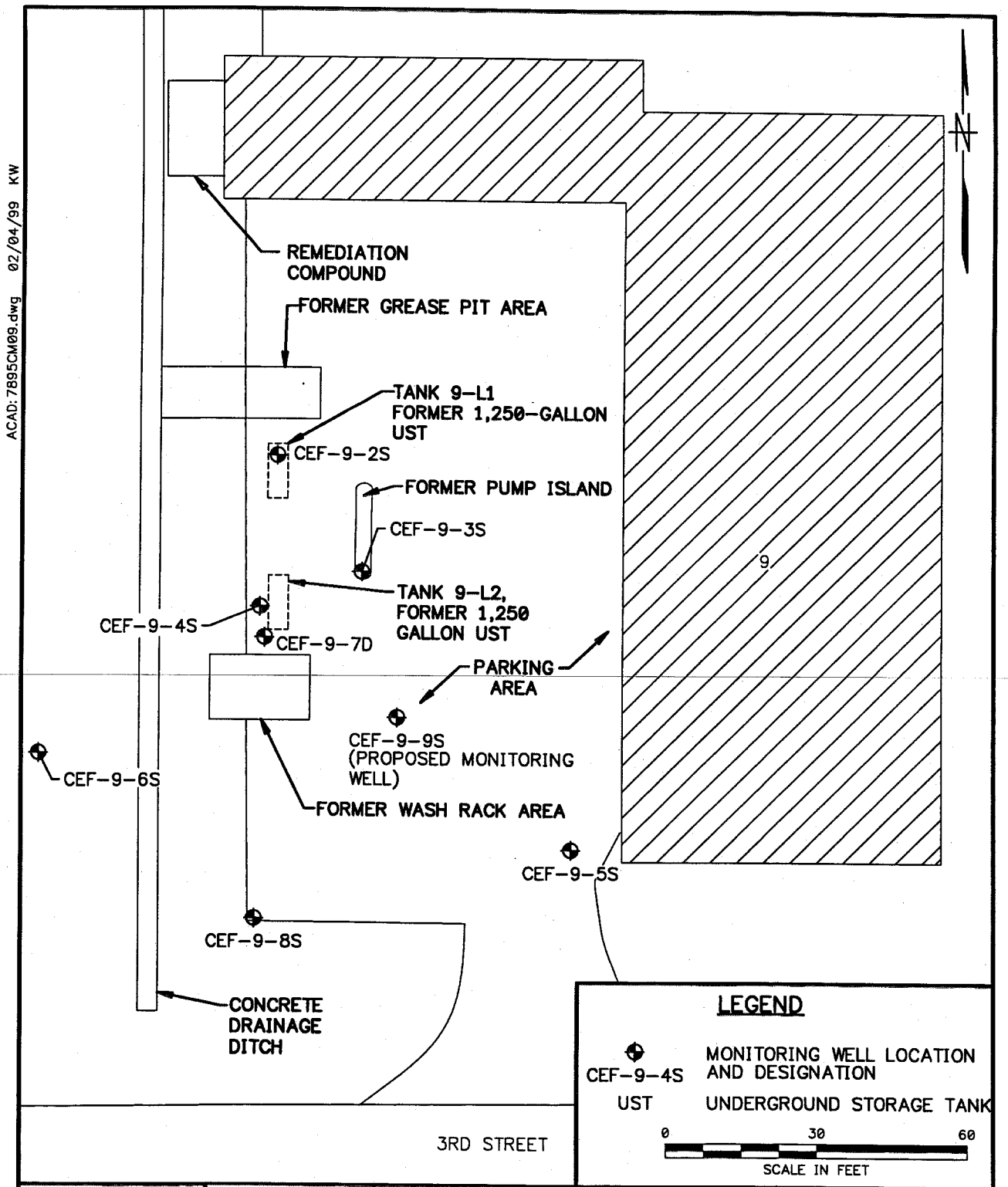

DRAWN BY KW DATE 12/24/98	ADDITIONAL MONITORING WELL LOCATION REMEDIAL ACTION PLAN BUILDING 9, TANKS 9-L1 AND 9-L2 NAVAL AIR STATION CECIL FIELD JACKSONVILLE, FLORDIA	CONTRACT NO. 7895	
CHECKED BY DATE		APPROVED BY DATE	
COST/SCHED-AREA		APPROVED BY DATE	
SCALE AS NOTED		DRAWING NO. FIGURE 7-2	REV. 0

FORM CADD NO. SDIV_AV.DWG. - REV 0 - 1/20/98

that the COC's are below the RAO's, then additional borings will be advanced to confirm that the soil contamination has been remediated.

7.4 MONITORING PARAMETERS

The following table presents the monitoring parameters that will be analyzed in groundwater samples collected from each of the wells. As presented below, dissolved oxygen, and several other "water chemistry" parameters will be collected in addition to the usual contaminant analyses. TtNUS believes that these comparatively inexpensive analyses help to determine if increased biological activity is occurring. Additionally, monitoring for dissolved oxygen can be compared to the baseline concentrations and determine a more accurate air sparging radius of influence. Monitoring reports will provide an evaluation of the data to provide an indication of the progress in remediation.

TABLE 7-1

Description of Monitoring Parameter	Method of Analysis
Volatile Organic Aromatics	EPA Method 8021B
Poly-Aromatic Hydrocarbons	EPA Method 8310
Total Recoverable Petroleum Hydrocarbons	FL-PRO
Lead (water only)	EPA Method 239.2
Ethylene Dibromide (water only)	EPA Method 504
Dissolved Oxygen	Hach Kit
Hydrogen Sulfide	Hach Kit
pH	Direct Read Meter
Specific Conductance	Direct Read Meter

7.5 CALCULATED CLEAN-UP TIME

Addendix C contains the calculation for anticipate clean-up time. This calculation uses a logarithmic decay function to model the chemical processes, and is regarded as a conservative number for clean-up time.

The calculation indicates that a conservative estimate of clean-up time is 2.0 years.

SECTION 8.0 REFERENCES

ABB Environmental Services, Inc., December 1997. Draft Site 5 Groundwater Remediation Design, Naval Air Station Cecil Field, Jacksonville, Florida.

Tetra Tech NUS, Inc., October 1998. Draft Site 16 Groundwater Remediation Design, Naval Air Station Cecil Field

Mobile Corporation, February 1993, Air Sparging, U.S. Marketing Division

Florida Department of Environmental Protection, October 1990. *Getting It Right The First Time.* Guidance document issued by Bureau of Waste Cleanup, Technical Review Section.

APPENDIX A

SAR TABLES AND FIGURES

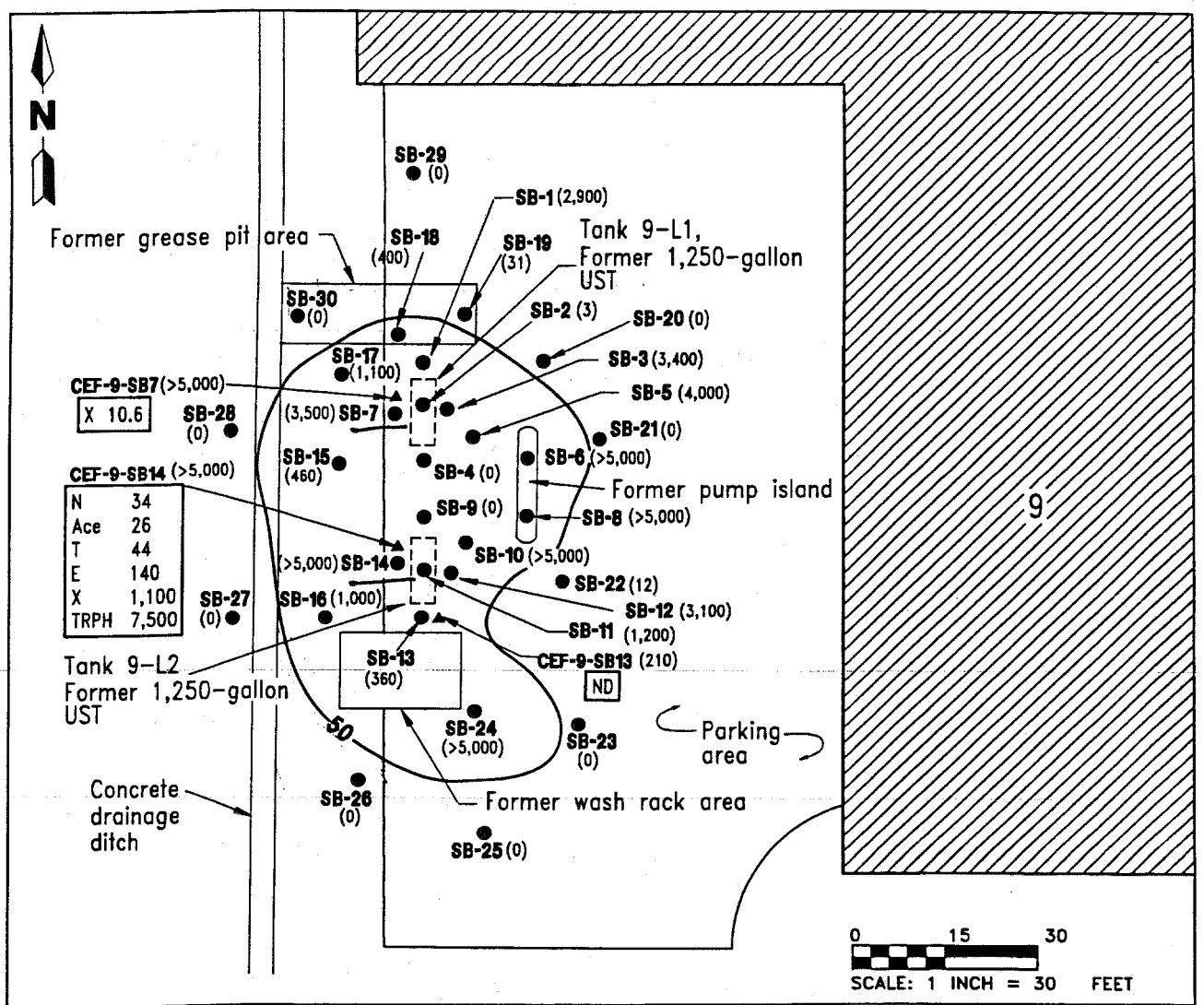

LEGEND

SB-9 ●	Soil boring location and designation
CEF-9-SB13 ▲	KAG subsurface soil sample location and designation
(360)	OVA concentration in parts per million
—50—	OVA contour in parts per million
X 10.6	Concentrations which exceed FDEP Leachability SCTLs (Chapter 62-770, FAC)
ND	Detections do not exceed FDEP Leachability SCTLs (Chapter 62-770, FAC)

NOTE: All concentrations in milligrams per kilogram.

OVA	Organic vapor analyzer
N	Naphthalene
Ace	Acenaphthylene
T	Toluene
E	Ethylbenzene
X	Total xylenes
TRPH	Total recoverable petroleum hydrocarbons
UST	Underground storage tank
KAG	Kerosene Analytical Group
FDEP	Florida Department of Environmental Protection
SCTL	Soil cleanup target levels
FAC	Florida Administrative Code

FIGURE 5-1
TANKS 9-L1 AND 9-L2
SOIL CONTAMINATION DISTRIBUTION

K:\02523\02523-13\SAR\02523990.DWG, VC-VC 09/30/98 11:36:42, AutoCAD R14

SITE ASSESSMENT REPORT
BUILDING 9, TANKS 9-L1 AND 9-L2

NAVAL AIR STATION CECIL FIELD
JACKSONVILLE, FLORIDA

Table 5-1
Summary of Soil Analytical Results, August 1998

Site Assessment Report
Building 9, Tanks 9L1 and 9L2
Naval Air Station Cecil Field
Jacksonville, Florida

Compound	Soil Boring Identification and Sampling Depth			Chapter 62-770, FAC, FDEP Soil Cleanup Target Levels for Leachability
	SB-14 (6 ft bls, OVA = >5,000 ppm)	SB-13 (6 ft bls, OVA = 210 ppm)	SB-7 (6 ft bls, OVA = >5,000 ppm)	
Polynuclear Aromatic Hydrocarbons (mg/kg)				
Naphthalene	**34**	ND	0.480	1
Acenaphthylene	**26**	ND	ND	22
Phenanthrene	0.350 J	0.046 J	ND	120
Fluoranthene	ND	0.090	ND	550
Benzo(a)anthracene	ND	0.049	ND	2.9
Chrysene	ND	0.051	ND	80
Benzo(b)fluoranthene	ND	0.060	ND	9.8
Benzo(k)fluoranthene	ND	0.051	ND	25
Benzo(a)pyrene	ND	0.140	ND	7.8
Benzo(g,h,i)perylene	ND	0.310	ND	13,000
Indeno(1,2,3-cd)pyrene	ND	0.170	ND	28
Volatile Organic Compounds (mg/kg)				
Toluene	**44**	ND	ND	0.4
Ethylbenzene	**140**	ND	ND	0.4
Total xylenes	**1,100**	ND	**10.6**	0.3
Total Recoverable Petroleum Hydrocarbons (TRPH) (mg/kg)				
TRPH	**7,500**	340	64	340

Notes: Bold indicates that values exceed Chapter 62-770, FAC, residential, industrial, or leachability soil cleanup target levels.

ft bls = feet below land surface.
FAC = Florida Administrative Code.
FDEP = Florida Department of Environmental Protection.
mg/kg = milligrams per kilogram.
ND = not detected.
J = analyte detected; value between the Method Detection Level and the Practical Quantitation Level.
OVA = organic vapor analyzer.
ppm = parts per million.

Table E-1
Soil Screening Results

Site Assessment Report
Building 9, Tanks 9L1 and 9L2
Naval Air Station Cecil Field
Jacksonville, Florida

Boring Number	OVA Concentration (ppm)			
	Depth (feet bls)	Unfiltered	Filtered	Actual
SB-1	1	700	0	700
	3	2,700	0	2,700
	5	2,900	0	2,900
	7	2,400	0	2,400
	9 (wet)	500	0	500
SB-2	1	3	–	3
	2 (refusal)	NS	–	NS
SB-3	1	0	–	0
	3	290	0	290
	5	950	0	950
	7	3,400	0	3,400
	7.5 (damp)	4,700	0	4,700
SB-4	1	0	–	0
	3	0	–	0
	5 (refusal)	0	–	0
SB-5	1	32	0	32
	3	700	0	700
	5	1,800	0	1,800
	7	4,000	0	4,000
	8.5 (damp)	2,400	0	2,400
SB-6	1	0	–	0
	3	8	–	8
	5	>5,000	0	>5,000
	7	1,100	0	1,100
	9 (wet)	950	0	950
SB-7	1	0	–	0
	3	480	0	480
	5	950	0	950
	7	3,500	0	3,500
SB-8	1	7	–	7
	3	2,800	0	2,800
	5	>5,000	0	>5,000
	7	4,600	0	4,600
	9 (wet)	1,600	0	1,600

See notes at end of table.

Table E-1 (Continued)
Soil Screening Results

Site Assessment Report
Building 9, Tanks 9L1 and 9L2
Naval Air Station Cecil Field
Jacksonville, Florida

Boring Number	OVA Concentration (ppm)			
	Depth (feet bls)	Unfiltered	Filtered	Actual
SB-9	1	0	–	0
	3 (refusal)	0	–	0
SB-10	1	180	0	180
	3	4,400	0	4,400
	5	>5,000	0	>5,000
	7 (wet)	>5,000	0	>5,000
SB-11	1	0	–	0
	3	0	–	0
	5	0	–	0
	7	1,200	0	1,200
	7.5 (damp; refusal)	1,500	0	1,500
SB-12	1	0	–	0
	3	110	0	110
	5	3,000	0	3,000
	7	3,100	0	3,100
	8 (wet)	800	0	800
SB-13	1	0	–	0
	3	0	–	0
	5	0	–	0
	7 (refusal)	360	0	360
SB-14	1	0	–	0
	3	320	0	320
	5	3,000	0	3,000
	7	>5,000	0	>5,000
	9 (wet)	700	0	700
SB-15	1	0	–	0
	3	0	–	0
	5 (moist)	460	0	460
	7 (wet)	4,800	0	4,800
SB-16	1	0	–	0
	3	0	–	0
	5	1,000	0	1,000
	7 (wet)	>5,000	0	>5,000

See notes at end of table.

Table E-1 (Continued)
Soil Screening Results

Site Assessment Report
Building 9, Tanks 9L1 and 9L2
Naval Air Station Cecil Field
Jacksonville, Florida

Boring Number	OVA Concentration (ppm)			
	Depth (feet bls)	Unfiltered	Filtered	Actual
SB-17	1	0	–	0
	3	0	–	0
	5	1,100	0	1,100
	7 (wet)	>5,000	0	>5,000
SB-18	1	0	–	0
	3	0	–	0
	5	400	0	400
	7 (wet)	1,900	0	1,900
SB-19	1	0	–	0
	3	0	–	0
	5	5	0	5
	7	31	0	31
SB-20	1	0	–	0
	3	0	–	0
	5	0	–	0
	7 (wet)	90	0	90
SB-21	1	0	–	0
	3	0	–	0
	5	0	–	0
	7 (wet)	90	0	90
SB-22	1	12	0	12
	3	0	–	0
	5	0	–	0
	7 (wet)	200	–	200
SB-23	1	0	–	0
	3	0	–	0
	5	0	–	0
	7 (wet)	150	0	150
SB-24	1	220	0	220
	3	>5,000	0	>5,000
	5	>5,000	0	>5,000
	6.5 (wet)	>5,000	0	>5,000

See notes at end of table.

Table E-1 (Continued)
Soil Screening Results

Site Assessment Report
Building 9, Tanks 9L1 and 9L2
Naval Air Station Cecil Field
Jacksonville, Florida

Boring Number	Depth (feet bls)	OVA Concentration (ppm)		
		Unfiltered	Filtered	Actual
SB-25	1	0	--	0
	3	0	--	0
	5	0	--	0
	7 (wet)	0	--	0
SB-26	1	0	--	0
	3	0	--	0
	5	0	--	0
	7 (wet)	0	--	0
SB-27	1	0	--	0
	3	0	--	0
	5	0	--	0
	7 (wet)	0	--	0
SB-28	1	0	--	0
	3	0	--	0
	5	0	--	0
	7 (wet)	0	--	0
SB-29	1	0	--	0
	3	0	--	0
	5	0	--	0
	7 (wet)	0	--	0
SB-30	1	0	--	0
	3	0	--	0
	5	0	--	0
	7 (wet)	0	--	0

Notes: All soil samples were collected on May 29, May 30, June 2, and October 23, 1997.
Soil samples were filtered with carbon to determine the methane concentration.

OVA = organic vapor analyzer.
ppm = parts per million.
bls = below land surface.
wet = soil sample was completely saturated when analyzed.
-- = filtered readings were not collected.
refusal = subsurface obstruction encountered.
damp = soil sample damp when analyzed.
NS = no sample collected.

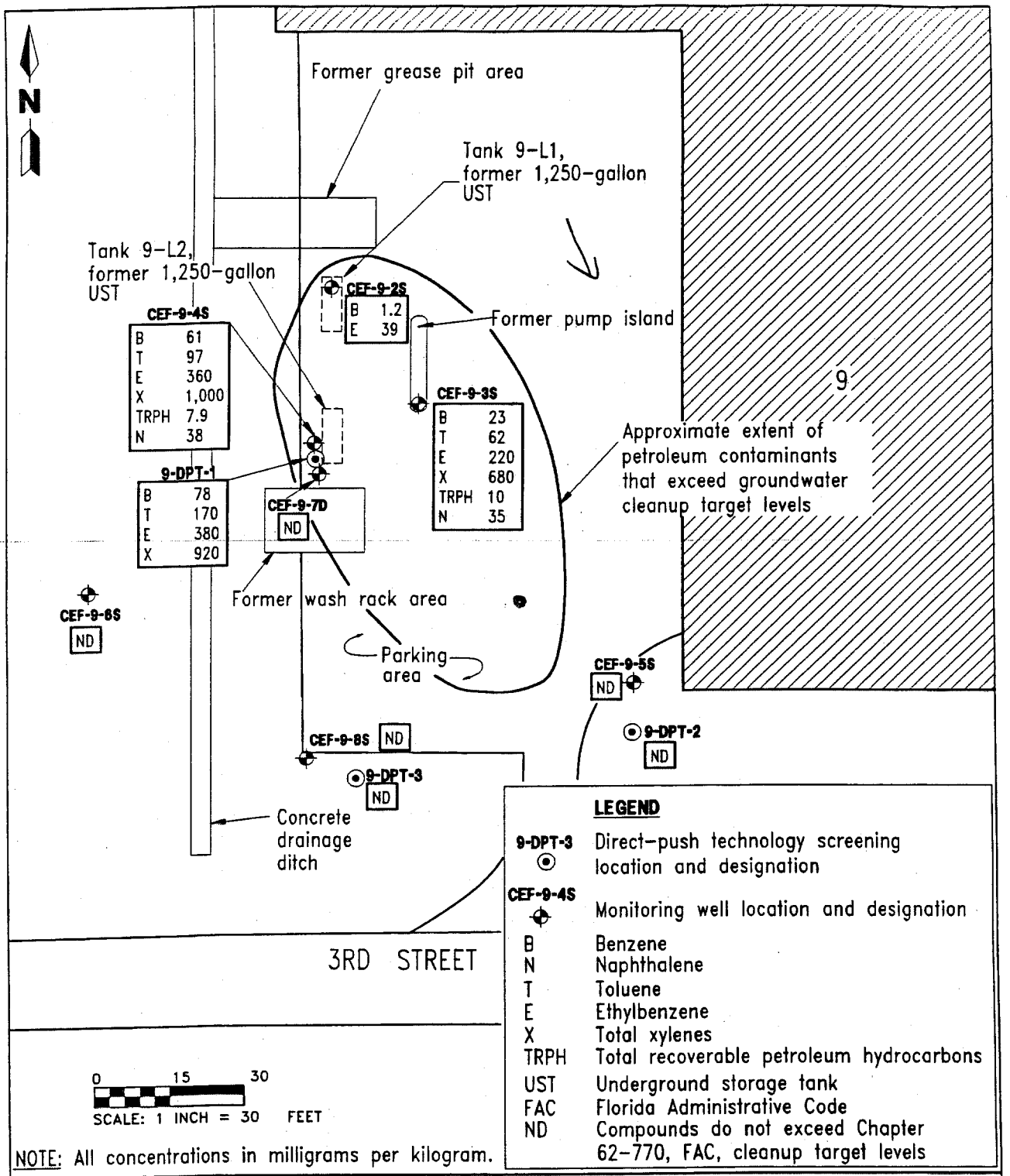

NOTE: All concentrations in milligrams per kilogram.

FIGURE 5-2
TANKS 9-L1 AND 9-L2
PETROLEUM CONTAMINANTS EXCEEDING CLEANUP TARGET LEVELS IN THE SURFICIAL AQUIFER
JUNE 1998

K:\02523\02523-13\SAR\02523991.DWG, VC-BB 10/02/98 13:58:18, AutoCAD R14

SITE ASSESSMENT REPORT
BUILDING 9, TANKS 9-L1 AND 9-L1

NAVAL AIR STATION CECIL FIELD
JACKSONVILLE, FLORIDA

Table 5-2
Summary of Groundwater Analytical Results, June 1998

Site Assessment Report
Building 9, Tanks 9L1 and 9L2
Naval Air Station Cecil Field
Jacksonville, Florida

Parameter	Monitoring Well Number, CEF-9-											Groundwater Cleanup Target Levels[1]
	2S		3S		3SD	4S		5S	6S	7D	8S	
	1997	1998	1997	1998	1998	1997	1998	1998	1998	1998	1998	
Volatile Organic Compounds (μg/ℓ)												
Benzene	ND	**18**	46	**53**	**54**	90	**61**	ND	ND	ND	ND	1
Toluene	7.1	1.1	240	**62**	**66**	96	**97**	ND	ND	ND	ND	40
Ethylbenzene	67	**39**	390	**220**	**220**	380	**360**	ND	ND	ND	ND	30
Xylenes	190	11	1,900	**680**	**670**	1,600	**1,000**	ND	ND	ND	ND	20
Polynuclear Aromatic Hydrocarbons (μg/ℓ)												
Naphthalene	NA	4.4	NA	**24**	**35**	NA	**38**	ND	ND	ND	ND	20
Lead[2] (μg/ℓ)												
Lead	ND	4.7/ND	ND	ND/ND	ND/ND	5.7	3.2/ND	9/ND	ND/ND	ND/ND	ND/ND	15
TRPH (mg/ℓ)												
TRPH	NA	2.6	NA	**10**	**8.8**	NA	**7.9**	ND	ND	ND	ND	5

[1] Based on Chapter 62-770, Florida Administrative Code.
[2] Unfiltered and filtered sample results are reported here (Unfiltered/Filtered). Filtered samples were collected when turbidity values were greater than 10 NTU.

Notes: Bold-faced values exceed cleanup target levels.

μg/ℓ = micrograms per liter.
ND = not detected.
TRPH = total recoverable petroleum hydrocarbons.
mg/ℓ = milligrams per liter.
S = monitoring well screened in the shallow surficial aquifer (4 to 14 feet below land surface [bls]).
3SD = duplicate sample of monitoring well 3S.
D = monitoring well screened in the deep surficial aquifer (26 to 30 feet bls).
NTU = nephelometric turbidity unit.
NA = parameter not analyzed for during confirmatory sampling in 1997.

APPENDIX B

STATE TARGET CONCENTRATIONS

TABLE IV
Selected Soil Cleanup Target Levels (SCTLs)

Chemicals of Concern (Organic)	Direct Exposure (mg/kg) I #	II ##	Leachability (mg/kg) based on: Table V[a]	Table VI[b]	Table VII[c]	Table VIII[d]
PAHs:						
Acenaphthene	2300	22000	4	0.6	0.6	40
Acenaphthylene	1100	11000	22	0.003*	0.003*	220
Anthracene	19000	290000	2000	0.3	0.3	20000
Benzo(a)anthracene	1.4	5.1	2.9	0.4	0.4	29
Benzo(a)pyrene	0.1	0.5	7.8	1.2	1.2	78
Benzo(b)fluoranthene	1.4	5	9.8	1.5	1.5	98
Benzo(g,h,i)perylene	2300	45000	13000	2	2	130000
Benzo(k)fluoranthene	15	52	25	1.5	1.5	250
Chrysene	140	490	80	0.5	0.5	800
Dibenzo(a,h)anthracene	0.1	0.5	14	2.2	2.2	140
Fluoranthene	2800	45000	550	0.4	0.4	5500
Fluorene	2100	24000	87	9.4	9.4	870
Indeno(1,2,3-c,d)pyrene	1.5	5.2	28	4.3	4.3	280
Naphthalene	1000	8600	1	1	1.3	10
Phenanthrene	1900	29000	120	0.02*	0.02*	1200
Pyrene	2200	40000	570	0.8	0.8	5700
VOAs:						
Benzene	1.1	1.5	0.007	0.007	0.5	0.07
Ethylbenzene**	240	240	0.4	0.4	7.7	3.8
Toluene	300	2000	0.4	0.4	4.8	4
Total Xylenes**	290	290	0.3	0.3	5.3	2.9
OTHER:						
1,2-dichloroethane	0.6	0.9	0.02	0.02	0.7	0.2
MTBE	350	6100	0.2	0.2	150	1.6
TRPHs	350	2500	340	340	340	3400
(Inorganic)						
METALS:						
Arsenic	0.8	3.7	TCLP	TCLP	TCLP	TCLP
Barium	5200	87000	TCLP	TCLP	TCLP	TCLP
Cadmium	75	1300	TCLP	TCLP	TCLP	TCLP
Chromium	290	430	TCLP	TCLP	TCLP	TCLP
Lead***	500	1000	TCLP	TCLP	TCLP	TCLP
Mercury	3.7	28	TCLP	TCLP	TCLP	TCLP
Selenium	390	10000	TCLP	TCLP	TCLP	TCLP
Silver	390	9100	TCLP	TCLP	TCLP	TCLP

Values rounded to two significant figures if greater than 1 and to one significant figure if less than 1.

Values based on residential use assumptions.
Values based on worker industrial exposure assumptions.

* Unless the Method Detection Limit (MDL) using the most sensitive and currently available technology is higher than the specified criterion.
** Direct Exposure values based on Soil Saturation Limit (Csat).
*** Direct Exposure values from USEPA *Revised Interim Soil Lead Guidance for CERCLA Sites and RCRA Corrective Action Facilities*, OSWER Directive 9355.4-12(1994). Residential value is the middle of the USEPA suggested range of 400-600 mg/kg.

TCLP = Toxicity Characteristic Leaching Procedure. The analyses must be performed if the concentrations listed in Table II are exceeded, and need to pass test (see Table II).

[a] Table V - Groundwater Cleanup Target Levels for Resource Protection/Recovery.
[b] Table VI - Lower of Table V and Freshwater Surface Water Criteria.
[c] Table VII - Surface Water Criteria for Resource Protection/Recovery.
[d] Table VIII - Low Yield/Poor Quality.

Chemicals of Concern	Table V Groundwater Cleanup Target Levels[1]	Table VII Freshwater Surface Water Criteria[1]	Table VII Marine Surface Water Criteria[1]	Table VIII Groundwater of Low Yield/ Poor Quality	Table IX Natural Attenuation Default Source Concentration
Benzene	1 ug/l **	71 ug/l *	71 ug/l *	10 ug/l	100 ug/l
Ethylbenzene	30 ug/l **	605 ug/l	605 ug/l	300 ug/l	300 ug/l
Toluene	40 ug/l **	475 ug/l	475 ug/l	400 ug/l	400 ug/l
Total Xylenes	20 ug/l **	370 ug/l	370 ug/l	200 ug/l	200 ug/l
MTBE	35 ug/l	33600 ug/l	33600 ug/l	350 ug/l	350 ug/l
Acenaphthene	20 ug/l	3 ug/l	3 ug/l	200 ug/l	200 ug/l
Acenaphthylene	210 ug/l	0.031 ug/l *	0.031 ug/l *	2100 ug/l	2100 ug/l
Anthracene	2100 ug/l	0.3 ug/l	0.3 ug/l	21000 ug/l	21000 ug/l
Benzo(a)anthracene	0.2 ug/l	0.031 ug/l *	0.031 ug/l *	2 ug/l	20 ug/l
Benzo(a)pyrene	0.2 ug/l **	0.031 ug/l *	0.031 ug/l *	2 ug/l	20 ug/l
Benzo(b)fluoranthene	0.2 ug/l	0.031 ug/l *	0.031 ug/l *	2 ug/l	20 ug/l
Benzo(g,h,i)perylene	210 ug/l	0.031 ug/l *	0.031 ug/l *	2100 ug/l	2100 ug/l
Benzo(k)fluoranthene	0.5 ug/l	0.031 ug/l *	0.031 ug/l *	5 ug/l	50 ug/l
Chrysene	5 ug/l	0.031 ug/l *	0.031 ug/l *	50 ug/l	500 ug/l
Dibenzo(a,h)anthracene	0.2 ug/l	0.031 ug/l *	0.031 ug/l *	2 ug/l	20 ug/l
Fluoranthene	280 ug/l	0.3 ug/l	0.3 ug/l	2800 ug/l	2800 ug/l
Fluorene	280 ug/l	30 ug/l	30 ug/l	2800 ug/l	2800 ug/l
Indeno(1,2,3-c,d)pyrene	0.2 ug/l	0.031 ug/l *	0.031 ug/l *	2 ug/l	20 ug/l
Naphthalene	20 ug/l	26 ug/l	26 ug/l	200 ug/l	200 ug/l
Phenanthrene	210 ug/l	0.031 ug/l *	0.031 ug/l *	2100 ug/l	2100 ug/l
Pyrene	210 ug/l	0.3 ug/l	0.3 ug/l	2100 ug/l	2100 ug/l
1,2-dichloroethane	3 ug/l **	127 ug/l	127 ug/l	30 ug/l	300 ug/l
1,2-dibromoethane (EDB)	0.02 ug/l **	13 ug/l	13 ug/l	0.2 ug/l	2 ug/l
Toxicity bioassay tests	Not applicable	Pass test *	Pass test *	Not applicable	Not applicable
Arsenic	50 ug/l **	50 ug/l *	50 ug/l *	500 ug/l	500 ug/l
Barium	2000 ug/l **	###	###	20000 ug/l	20000 ug/l
Cadmium	5 ug/l **	##	0.3 ug/l *	50 ug/l	50 ug/l
Chromium	100 ug/l **	##	515 ug/l	1000 ug/l	1000 ug/l
Lead	15 ug/l **	##	5.6 ug/l *	150 ug/l	150 ug/l
Mercury	2 ug/l **	0.012 ug/l *	0.025 ug/l *	20 ug/l	20 ug/l
Selenium	50 ug/l **	5 ug/l *	71 ug/l *	500 ug/l	500 ug/l
Silver	100 ug/l **	0.07 ug/l *	0.35 ug/l	1000 ug/l	1000 ug/l
TRPHs	5 mg/l	5 mg/l	5 mg/l	50 mg/l	50 mg/l
Chloride	250 mg/l **#	####	####	2500 mg/l #	2500 mg/l #
Sulfate	250 mg/l **#	####	####	2500 mg/l #	2500 mg/l #
Total Dissolved Solids (TDS)	500 mg/l **#	####	####	5000 mg/l #	5000 mg/l #

[1] If the MDL given the condition of the sample, using the most sensitive and currently available technology, is higher than a specified criterion, the PQL shall be used.

In lieu of Table VI use the lower of Table V and Table VII Freshwater Surface Water Criteria.

* As provided in Chapter 62-302, F.A.C.

** As provided in Chapters 62-520 or 62-550, F.A.C.

Only applicable to sites where the contamination is derived from petroleum as defined in Section 376.301, F.S.

Hardness-dependent as provided in Chapter 62-302, F.A.C.

Not greater than 10% above background concentration.

Not greater than 10% above background concentration and only applicable to sites where the contamination is derived from petroleum as defined in Section 376.301, F.S.

APPENDIX C

DESIGN CALCULATIONS

Air Emissions Calculation

CLIENT:	U.S. Navy		
CLIENT SITE NO.:	NAS Cecil Field Building 9		
Tt NUS PROJECT NO.:	7895	By:	
DATE CALCULATED:	2/11/99	Checked By:	Pradeep Kumar

The air emission from a VES stack can be estimated using the following calculations. This methodology assumes that VOC removal is constant over the entire remedial duration. If this calculation is used for air sparging, it also assumes that VOC removal is constant over the entire remedial duration. Both estimates conservatively assume 100% VOC removal.

Emissions from Soil VOC Removal

Volume of Contaminated Soil (from SAR)	900.00	cubic yards
Mass of Contaminated Soil	1,260.00	tons
VOC Concentration	1,280.00	mg/kg
VOC Mass	322.56	lbs
Remedial Duration	2.19	years (see assumption below)
VOC Emission Rate	0.40	lbs/day

It is assumed that vadose-zone soil VOCs will be removed to meet cleanup levels earlier than groundwater because of the relatively limited extent of contamination.

Emissions from Groundwater VOCs Removal

Volume of Contaminated Groundwater (from SAR)	21,375.00	cubic feet
Volume of Contaminated Groundwater	754.85	cubic meters
VOC Concentration (Highest Value)	1.60	mg/L
VOC Mass	5,314.12	lbs
Remedial Duration	2.19	years (see clean up time calculation)
VOC Emission Rate	7.28	lbs/day

Total emision Rate = Emissions Due to Soil + Emissions Due to Groundwater

Total Mass of VOC to be removed =	5,636.68	lbs
Total Emission Rate =	7.68	lbs/day

Air Sparging Clean-up Time Calculation

CLIENT SITE NO.:	NAS Cecil Field Building 9		
TTNUS PROJECT NO.:	7895	By:	
DATE CALCULATED:	2/11/99	Checked By:	

(Source: "Air Sparging Model for Predicting Groundwater Cleanup Rate" K.L. Sellers and R.P Schreiber, CDM Inc. 1992)

The following first order decay/rate equation may be used to estimate a conservative time for the contaminants of concern concentrations to be reduced below the remedial action ojectives. This model calculates both the weighted average and maximum clean-up times as dictated by the initial concemtrations.

$$C_{(t)} = C_{(o)} \times e^{-Bt}$$

Variables:

$C_{(t)}$ = Concentration at end of duration or RAO's (ug/L)

$C_{(o)}$max = Initial Maximum Concentration (ug/L)

$C_{(o)}$ave = Initial Weighted Average Concentration (ug/L)

e = base of the natural log (approx. 2.71828)

B = first order differential rate constant (see page 2 of 4)

t = duration (solving for)

Solving for t reduces to:

$$t = \ln(C_{(t)} - C_{(o)}) / -B$$

CONTAMINANT TYPE	C_o Max (ug/l)*	C_o Ave (ug/L)*	C_t (ug/L)*	t Max (years)	t Ave (years)
Benzene	78.00	46.30	1.00	2.19	1.93
Toluene	170.00	96.60	40.00	0.73	0.44
Ethylbenzene	380.00	305.90	30.00	1.28	1.17
Total Xylenes	1000.00	828.20	20.00	1.97	1.87
Naphthalenes	38.00	28.20	20.00	0.40	0.22
TRPH	10.00	7.30	5.00	0.44	0.24

Assumptions:

* - TRPH units are listed in milligrams per Liter

Air Sparging Clean-up Time Calculation
Page 2 of 4
"Calculation of Rate Constant B"

CLIENT SITE NO.:	NAS Cecil Field Building 9		
TTNUS PROJECT NO.:	7895	By:	
DATE CALCULATED:	2/11/99	Checked by:	

(Source: "Air Sparging Model for Predicting Groundwater Cleanup Rate" K.L. Sellers and R.P Schreiber, CDM Inc. 1992)

The first order rate coefficient B can be calculated by the following equation.

$$B = f \times d \times D/L \times S/V \times H/\upsilon \times Q/V_s$$

Variables:

f = Fraction of plume sparged (unitless)	f =	1.0	assumed
d = Fraction of 24-hour day unit operates (unitless)	d =	1.0	assumed
D = Contaminant diffusion coefficent (cm^2/s)	D =	see below	
L = Diffusive distance around bubble (m)	L =	4.49E-03	see page 3 of 4
S/V = effective surface area to volume ratio of a bubble (m^{-1})	S/V =	667.7	see page 3 of 4
H = Depth of screen below water table (m)	H =	6.1	see page 4 of 4
u = Bubble terminal Rise velocity (m/s)	υ =	2.51E-01	see page 3 of 4
Q = Total air flow (m^3/s)	Q =	1.06E-02	see page 4 of 4
V_s = Volume of water in plume that contact bubbles (m^3)	V_s =	604.9	see page 4 of 4

CONTAMINANT TYPE	D	B (sec^{-1})	B (yr^{-1})
Benzene	1.00E-09	6.31E-08	1.99E+00
Toluene	1.00E-09	6.31E-08	1.99E+00
Ethylbenzene	1.00E-09	6.31E-08	1.99E+00
Total Xylenes	1.00E-09	6.31E-08	1.99E+00
Naphthalenes	8.00E-10	5.05E-08	1.59E+00
TRPH	8.00E-10	5.05E-08	1.59E+00

Air Sparging Clean-up Time Calculation
Page 3 of 4
"Calculation of Variables"

Estimation of Contaminant Diffusion Coefficient

Volatiles =	**1.00E-09**	**m^2/s**
Semi-Volatiles =	**8.00E-10**	**m^2/s**

Calculate the diffusive distance around bubble (L)

This model assumes L = r

Where r is equal to the effective radius of the bubble

$$r = 2 \times R \times \{6\sigma/[R^2 \times (P_w - P_a) \times g]\}^{1/3}$$

Given

R =	**2.54E-04**	**m**	(orifice diameter of the sparger or well screen slot)
σ =	**0.0728**	**N/m**	(air water surface tension)
Pw =	**1000**	**kg/m^3**	(density of water)
Pa =	**1.29**	**kg/m^3**	(density of air at 50F)
g =	**9.8**	**m/s^2**	(acceleration due to gravity)
well slot	**0.01**	**in**	
L = r =	**4.49E-03**	**m**	

S/V is the effective surface area to volume ratio of a bubble

S/V = 3/r

r is calculated above, therefore

S/V = 667.7 m^{-1}

υ is the terminal rise velocity of a bubble

$$\upsilon = \{1.04 \times g \times r + (1.07 \times \sigma)/(r \times P_w)\}^{1/2}$$

Where:

g =	**9.8**	**m/s^2**	(acceleration due to gravity)
r =	**4.49E-03**	**m**	(calculated above)
σ =	**0.0728**	**N/m**	(air water surface tension)
P_w =	**1000**	**kg/m^3**	(density of water)

υ = 0.251 m/s

Air Sparging Clean-up Time Calculation
Page 4 of 4
"Calculation of Variables"

The height H is equal to the average total depth of the sparge well to the water table

TD =	25	ft
DTW =	5	ft
H =	20	ft
H =	6.096	m

The air flow rate is determined by the number of sparge wells and a correction for pressure caused by well depth

Q = # wells x flow rate per well x adjustment for pressure

# wells =	3	unitless
low/well =	12.00	SCFM
TD =	25.00	ft
DTW =	5.00	ft
ADJF =	0.62	unitless
Q =	22.42	CFM
Q =	1.06E-02	m^3/s

Volume of plume in sparged area is determined by following calculation

Vs = A x h x η

Where:

A =	4,275	ft^2	(surface area of plume)
h =	20.00	ft	(height of contaminated groundwater)
η =	0.25	unitless	(porosity from SAR)
V_s =	21375	ft^3	
V_s =	604.9	m^3	

CALCULATION OF ACHIEVABLE VAPOR EXTRACTION FLOWRATE

CLIENT SITE NO.:	U.S. Navy NASCF Building 9		
TtNUS PROJECT NO.:	7895	By:	
DATE CALCULATED:	2/11/99	Checked By:	Amudeep Kumar

(Source: P.C. Johnson, C.C. Stanley, M.W Kemblowski, D.L. Byers, and J.D. Colthart, 1990, A Practical Approach to Design, Operation, and Monitoring of In Situ Soil-Venting Systems)

The permeability of the soil to vapors and the achievable vapor flow rates that can be achieved can be calculated using the following equation. This equation is derived from the simplistic steady-state radial flow solution for compressible flow, but should provide reasonable estimates for vapor flow rates.

$$Q/H = \pi(k/u)\ P_w((1-(P_{atm}/P_w)^2)/\ln(R_w/R_i))$$

Variables:

Q = Vapor Flow Rate (cm^3/s)

H = Unit thickness of well screen (cm)

k = Soil permeability to air flow (darcy)

u = Viscosity of air = 1.8×10^{-4} (g/cm-s)

Pw = absolute pressure at extraction well ($g/cm\text{-}s^2$)

Patm = Absolute Ambient Pressure 1.01×10^6 ($g/cm\text{-}s^2$)

Rw = Radius of vapor extraction well (cm)

Ri = Radius of influence of vapor extraction well (cm)

Vapor Extraction Well Test Data

Test well designation	EWO1	
Test well vapor flow rate (observed)	10	CFM
Test well Vacuum (observed)	4	in Hg
Test well screen length through vadose zone (As installed)	3	ft
Test well radius	0.0218	ft
Test well radius of influence observed	15	ft

Vapor Extraction Well Design Parameters

Design well(s) vacuum	4	in Hg
Design well screen length	90	ft
Design well(s) radius	0.0873	ft
Design well(s) radius of influence (same as test well)	15	ft
Design well(s) quantity	2	
Design well(s) horizontal (0.5) or Vertical (1)	0.5	
Total design well(s) screen length	180	ft

Calculated soil permeability	215.84	darcy
Vapor flow rate per unit thickness of well screen Q/H (design)	1.67	$ft^3/min/ft$
System design flow rate	300.00	ft^3/min

Weighted Average Calculation of Concentrations

CLIENT SITE NO.:	Naval Air Station Cesil Field, Site 9		
TETRA-TECH, NUS PROJECT NO.:	7895	By:	
DATE CALCULATED:	2/11/99	Checked By:	
SPARGING WELL:	AS-1, AS-2, and AS-3		

(Source: FDEP Compliance Manual, "Getting It Right the First Time")

Maximum contaminant concentrations at the sparging wells may be estimated by calculating a weighted average of surrounding well contaminant concentrations under static conditions. The weighted average is based on the inverse of the distances from the nearest sparging well. In order to be conservative, TtNUS does not factor wells in which no detction of contaminats were received.

Weighted Average Concentrations are calculated using the following formula (25% factor of safety added):

$$C = \frac{(c1/d1 + c2/d2 + \ldots + cn/dn)}{(1/d1 + 1/d2 + \ldots + 1/dn)} \times 1.25$$

Variables:

C = Weighted Average Concentration

c# = monitoring well concentrations

d# = distance from nearest sparging well to monitoring well considered

WELL DESIGNATION	CEF-9-2S	CEF-9-3S	CEF-9-4S	9-DPT-1	
DISTANCE TO AS (ft):	17	8	15	18	
CONTAMINANT TYPE	Concentrations (ug/l)				Weighted Conc. (ug/l)
Benzene	1.2	23.0	61.0	78.0	46.3
Toluene	0.0	62.0	97.0	170.0	96.6
Ethylbenzene	39.0	220.0	360.0	380.0	305.9
Total Xylenes	0.0	680.0	1000.0	920.0	828.2
MTBE	0.0	0.0	0.0	0.0	0.0
Naphthalenes	0.0	35.0	38.0	0.0	28.2
TRPH	0.0	10.0	7.9	0.0	7.3
c8	0.0	0.0	0.0	0.0	0.0
c9	0.0	0.0	0.0	0.0	0.0
c10	0.0	0.0	0.0	0.0	0.0
c11	0.0	0.0	0.0	0.0	0.0
c12	0.0	0.0	0.0	0.0	0.0

CALCULATION OF TOTAL DYNAMIC HEAD IN THE SVE BLOWER

CLIENT SITE NO.:	U.S. Navy NASCF Building 9		
TTNUS PROJECT NO.:	7895		
DATE DESIGNED:	2/11/99	By:	
DESIGN SECTION: Extraction wells to SVE blower.		Checked By:	Pradeep Kumar
(Source: FDEP Compliance Manual, "Getting It Right the First Time")			

Calculates the total dynamic head losses through the system for blower sizing

Pipe Diameter	3	in
	0.25	ft
Air friction loss from CFM vs. friction loss table	0.23	in H_20
Air Flowrate (Acheivable Flowrate Calculation)	300.00	CFM
Velocity	101.86	ft/s

Total Friction Head

Equivalent Length of Pipe Calculation:

Linear Run of Pipe (ft)	100	ft

Pipe Fitting Type	Number of Fittings	Equivalent Length of fitting	Total Equivalent Length per fitting type	
Elbows (90 deg)	4.0	7.0	28	ft
Elbows (45 deg)	1.0	4.0	4	ft
Couplings	12.0	3.0	36	ft
Check Valve	0.0	19.0	0	ft
Threaded Adapters	0.0	3.0	0	ft
Ball Valve	0.0	9.0	0	ft
Tee (flow through side)	1.0	7.0	7	ft
Gate Valve	3.0	9.0	27	ft
Total Equivalent Length of pipe			202	ft

Total friction head for	202	ft of pipe with a friction factor of	0.230	in H_20 per linear ft
Total Friction Head			46.46	in H_20

Pressure Losses Due to Equipment

Unit Type	Number of Units	Pressure Losses Through Unit		Pressure head in H^20	
Carbon Drums	0	4.0	in H^20	0.00	in H_20
Moisture Separator	1	4.0	in H^20	4.00	in H_20
Particle Filter	1	4.0	in H^20	4.00	in H_20
Total Equipment Head Loss				8.00	in H_20

Total Dynamic Head = Friction Head + Total Equipment Head Loss

CALCULATION OF TOTAL DYNAMIC HEAD IN THE SVE BLOWER

Total Dynamic Head	54.46	in H_20
	4.00	in-Hg

SVE Blower

Application/Engineering

Friction Loss Per Foot of Tubing

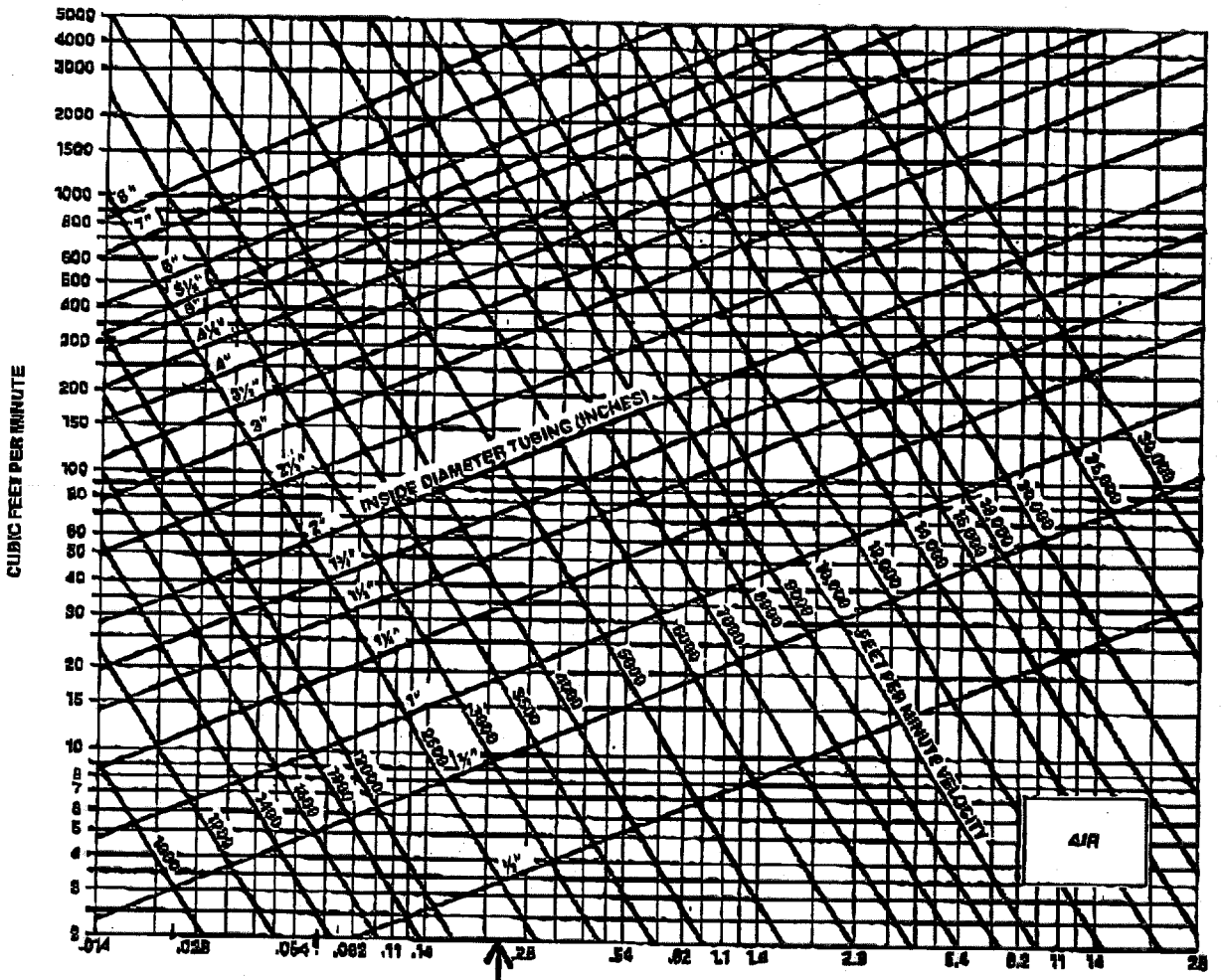

.025

Choose .23 in H_2O/ft

Friction Loss in Fittings

To calculate friction loss in fittings use chart below. This chart will yield equivalent lengths (in feet) of tubing. Use this length with graph above to find friction loss in inches of water column.

NOMINAL PIPE SIZE (INCHES)	EQUIVALENT TUBING LENGTH (FEET)	
	90° EL	45° EL
1¼	3	1.5
1½	4	2
2	5	2.5
2½	6	3
3	7	4
4	10	5
5	12	6
6	15	7.5
8	20	10

AIR SPARGING LINE DYNAMIC HEAD CALCULATION

CLIENT SITE NO.:	U.S. Navy NASCF Building 9		
TtNUS PROJECT NO.:	7895	By:	
DATE CALCULATED:	2/11/99	Checked by:	
DESIGN SECTION:	Compound to sparging wells.		

(Source: FDEP Compliance Manual, "Getting It Right the First Time")

Calculates the total friction head losses through the system for blower sizing

Pipe Diameter	2	in
	0.17	ft
Air friction loss from CFM vs. friction loss table	0.017	in H_20
Air Flowrate	30.00	CFM
Velocity	22.92	ft/s

Total Friction Head

Equivalent Length of Pipe Calculation:

Linear Run of Pipe (ft)	150	ft

Pipe Fitting Type	Number of Fittings	Equivalent Length of fitting	Total Equivalent Length per fitting type	
Elbows (90 deg)	8.0	5.0	40	ft
Elbows (45 deg)	1.0	2.5	2.5	ft
Couplings	15.0	3.0	45	ft
Check Valve	1.0	3.0	3	ft
Threaded Adapters	0.0	0.0	0	ft
Ball Valve	1.0	3.0	3	ft
Tee (flow through side)	1.0	5.0	5	ft
Gate Valve	0.0	0.0	0	ft
Total Equivalent Length of pipe			248.5	ft

Total pipe friction head for	248.5	ft of pipe with a friction factor of	0.017	in H_20 per linear ft
Total Pipe Friction Head			4.22	in H_20

Total Losses due to Equipment

Unit Type	Number of Units	Pressure Losses Through Unit		Pressure head in in H_20	
Carbon Drums	0	3.0	in H^20	0.00	in H_20
Moisture Separator	0	3.0	in H^20	0.00	in H_20
Particle Filter	0	1.0	in H^20	0.00	in H_20
Total Equipment Head Loss Head				0.00	in H_20

Total Friction Head = Pipe Friction Head + Equipment Head Loss

AIR SPARGING LINE DYNAMIC HEAD CALCULATION

Total Friction Head	4.22	in H_20
	0.16	psi

Air Sparging Blower

Application/Engineering

Friction Loss Per Foot of Tubing

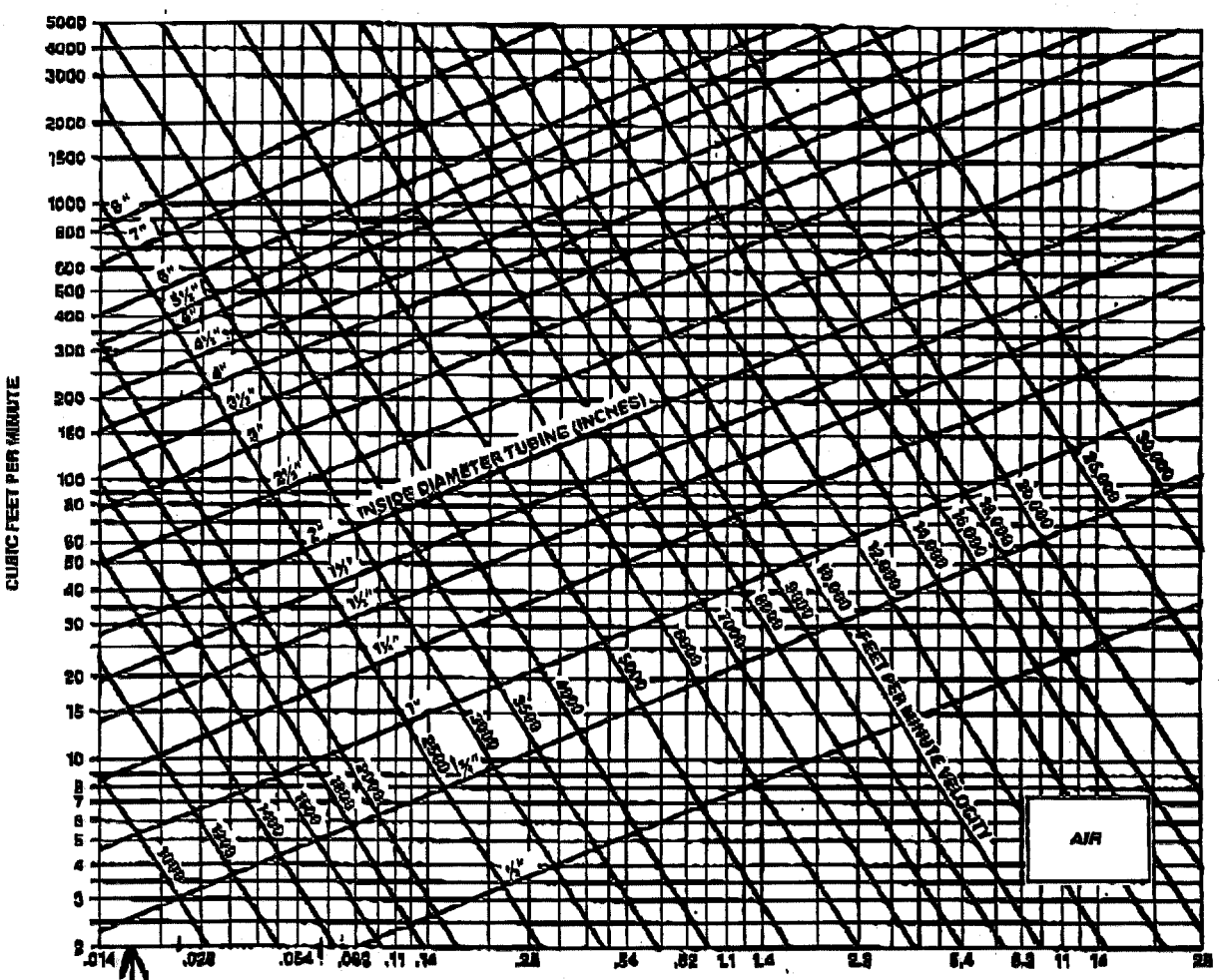

Choose .016

.025

Friction Loss in Fittings

To calculate friction loss in fittings use chart below. This chart will yield equivalent lengths (in feet) of tubing. Use this length with graph above to find friction loss in inches of water column.

NOMINAL PIPE SIZE (INCHES)	EQUIVALENT TUBING LENGTH (FEET)	
	90° EL	45° EL
1¼	3	1.5
1½	4	2
2	5	2.5
2½	6	3
3	7	4
4	10	5
5	12	6
6	15	7.5
8	20	10

Carbon Usage Estimation

Friday, February 12, 1999

Tetratech
Company Contact: John Kusera
Prepared By: MR

Flow Rate: 300 CFM
Temperature: 90 f
Relative Humidity: 90 %
Adsorption Pressure: 1 ATM

Concentration(ppmv)	Component
3.400	benzene
2.550	toluene
8.500	ethyl benzene
66.300	x
3.600	naphthelene

42.47 Pounds Carbon Per Day
Average Loading: 22.567 Pounds Per 100 Pounds Carbon

964-281-0070

APPENDIX D

VENDOR INFORMATION

ROOTS Universal RAI®
ROTARY POSITIVE BLOWERS

FRAMES 22 THRU 718

Air Sparging Blower

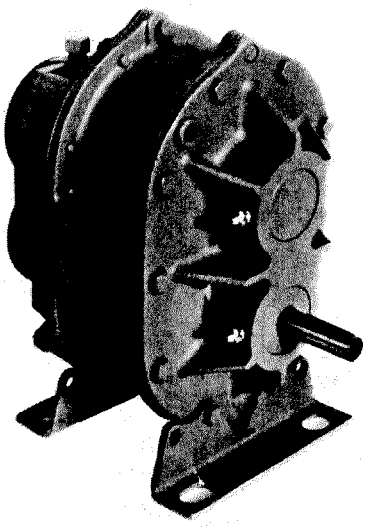

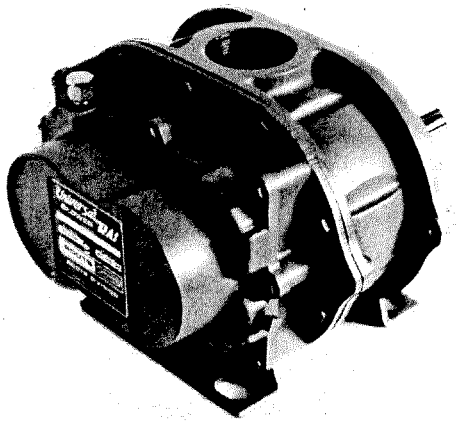

OUTLINE DRAWING & DIMENSIONAL TABLE

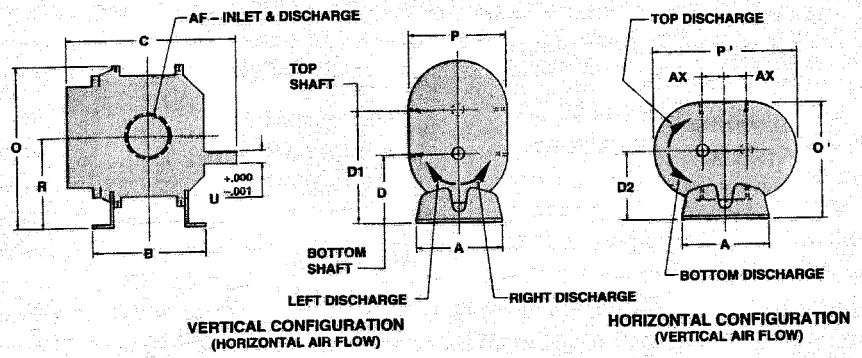

NOTES:
1. All dimensions are in inches.
2. Do not use for construction.

Frame Size	A	B	C	Drive shaft location D	D1	D2	O	O'	P	P'	R	U	Keyway	AF Inlet & Discharge Diameter	AX	Approx. Net Wt. (Lbs.)
22	5.13	5.00	9.75	3.75	6.25	3.75	9.63	6.88	6.25	9.25	5.00	.625	.188 x .094	1.0 NPT	1.25	32
24	5.13	7.00	11.75	3.75	6.25	3.75	9.63	6.88	6.25	9.25	5.00	.625	.188 x .094	2.0 NPT	1.25	43
32	7.25	6.75	11.25	5.00	8.50	5.00	12.81	8.88	7.75	12.13	6.75	.750	.188 x .094	1.25 NPT	1.75	69
33	7.25	7.63	12.13	5.00	8.50	5.00	12.81	8.88	7.75	12.13	6.75	.750	.188 x .094	2.0 NPT	1.75	74
36	7.25	10.00	14.63	5.00	8.50	5.00	12.81	8.88	7.75	12.13	6.75	.750	.188 x .094	2.5 NPT	1.75	102
42	8.00	7.25	13.00	6.25	10.25	6.25	15.06	10.63	8.75	13.63	8.25	.875	.188 x .094	1.5 NPT	2.00	88
45	8.00	10.00	15.50	6.25	10.25	6.25	15.06	10.63	8.75	13.63	8.25	.875	.188 x .094	2.5 NPT	2.00	109
47	8.00	11.75	17.63	6.25	10.25	6.25	15.06	10.50	8.50	13.63	8.25	.875	.188 x .094	3.0 NPT	2.00	128
53	10.50	8.38	15.38	6.25	11.25	6.75	17.38	11.88	10.25	17.25	8.75	1.125	.250 x .125	2.5 NPT	2.50	143
56	10.50	11.00	18.00	6.25	11.25	6.75	17.38	12.25	11.00	17.25	8.75	1.125	.250 x .125	4.0 NPT	2.50	170
59	10.50	14.00	21.18	6.25	11.25	6.75	17.38	12.25	11.00	17.25	8.75	1.125	.250 x .125	4.0 NPT	2.50	204
65	11.00 *	10.00	18.38	8.75	14.75	8.75	21.63	15.13	12.75	19.75	11.75	1.375	.312 x .156	3.0 NPT	3.00	245
68	11.00 *	13.00	21.38	8.75	14.75	8.75	21.63	15.13	12.75	19.75	11.75	1.375	.312 x .156	5.0 NPT	3.00	285
615	11.00 *	20.00	28.38	8.75	14.75	8.75	21.63	16.25	15.00	19.75	11.75	1.375	.312 x .156	6.0 FLG	3.00	425
76	14.00 **	11.75	19.94	11.00	18.00	11.00	26.13	20.69	19.38	23.25	14.50	1.562	.375 x .188	4.0 NPT	3.50	400
711	14.00 **	16.75	25.19	11.00	18.00	11.00	26.13	19.50	17.00	23.25	14.50	1.562	.375 x .188	6.0 FLG	3.50	530
718	14.00 **	23.75	32.19	11.00	18.00	11.00	26.13	19.50	17.00	23.25	14.50	1.562	.375 x .188	8.0 FLG	3.50	650

* 17.00 in horizontal configuration
** 21.00 in horizontal configuration

BASIC BLOWER DESCRIPTION

Universal RAI® blowers are heavy duty rotary blowers in a compact, sturdy design engineered for continuous service when operated within speed and pressure/vacuum ratings.

The basic model features a grey iron casing, carburized and ground alloy steel spur timing gears secured to steel shafts with a taper mounting and locknut, and grey iron involute impellers. Oversized anti-friction bearings are used, with a cylindrical roller bearing at the drive shaft to withstand V-belt pull.

Detachable rugged steel mounting feet permit easy in-field adaptability to either vertical or horizontal installation requirements. Because of the detachable mounting feet, these units can be easily adapted to any of four drive shaft positions – right hand, left hand, bottom or top. All frame sizes are center-timed to allow rotation in either direction.

The Universal RAI incorporates thrust control, and has grease lube on the drive end and splash oil lube on the gear end. Roots exclusive "Figure 8" gearbox design improves oil distribution and lengthens bearing and gear life.

All Universal RAI blowers are covered by an uncontested warranty that guarantees repair or replacement of any unit that malfunctions for any reason. This protects you for a full 18 months from date of original start-up or 24 months from date of shipment, whichever occurs first.

Also available in 6 sizes are RootsPak™ factory-engineered, completely assembled packaged units incorporating 17 frame sizes of Universal RAI rotary positive blowers. For complete information on these units, please turn to pages 8 thru 11.

Uncontested Warranty

For details, see page 3.

ROOTS DRESSER

UNIVERSAL RAI® PERFORMANCE TABLE

FRAME SIZE	SPEED RPM	1 PSI CFM	1 PSI BHP	2 PSI CFM	2 PSI BHP	3 PSI CFM	3 PSI BHP	4 PSI CFM	4 PSI BHP	5 PSI CFM	5 PSI BHP	6 PSI CFM	6 PSI BHP	7 PSI CFM	7 PSI BHP	10 PSI CFM	10 PSI BHP	11 PSI CFM	11 PSI BHP	12 PSI CFM	12 PSI BHP	15 PSI CFM	15 PSI BHP	MAX. VACUUM "Hg	MAX. VACUUM CFM	MAX. VACUUM BHP
22	1160	10	0.2	7	0.3	4	0.3	2	0.4															4	6	0.3
	3600	49	0.6	46	0.8	43	1.1	41	1.3	39	1.6	38	1.8	36	2.1	32	2.8	31	3.1	29	3.3			14	28	2.0
	5275	76	0.8	73	1.2	70	1.6	68	1.9	66	2.3	64	2.7	63	3.1	59	4.2	57	4.5	56	4.9			15	53	3.1
24	1160	24	0.3	19	0.4	15	0.6	11	0.8	8	0.9													6	12	0.6
	3600	102	0.8	97	1.3	93	1.8	89	2.3	86	2.8	83	3.3	81	3.8									14	69	3.8
	5275	156	1.2	150	1.9	146	2.7	143	3.4	140	4.2	137	4.9	135	5.6									15	119	5.8
32	1160	40	0.4	34	0.6	30	0.9	27	1.1	24	1.3	21	1.6	19	1.8									10	18	1.3
	2800	113	1.0	108	1.6	104	2.1	101	2.7	98	3.2	95	3.8	93	4.3	86	6.0	84	6.5	82	7.1	77	8.7	15	78	4.5
	3600	149	1.3	144	2.0	140	2.7	137	3.4	134	4.1	131	4.8	129	5.5	122	7.7	120	8.4	118	9.1	113	11.2	15	114	5.8
33	1160	55	0.5	48	0.8	43	1.1	39	1.4	35	1.7	31	2.1	28	2.4									10	27	1.7
	2800	156	1.2	149	2.0	144	2.7	140	3.5	136	4.2	132	5.0	129	5.7	120	8.0	118	8.7	116	9.5			14	113	5.6
	3600	205	1.6	199	2.5	193	3.5	189	4.5	185	5.4	181	6.4	178	7.4	170	10.3	167	11.2	165	12.2			15	159	7.6
36	1160	95	0.7	85	1.2	78	1.7	72	2.3	66	2.8	61	3.3	57	3.8									10	55	2.7
	2800	262	2.0	253	3.3	245	4.5	239	5.8	234	7.0	229	8.3	224	9.5									12	213	7.9
	3600	344	2.9	334	4.5	327	6.1	321	7.7	315	9.3	310	10.9	306	12.5									15	278	12.7
42	860	38	0.4	32	0.6	28	0.9	24	1.1	21	1.3	18	1.5	15	1.8									8	19	1.1
	1760	92	0.8	87	1.3	82	1.8	78	2.2	75	2.7	72	3.1	69	3.6	62	5.0	60	5.5	58	5.9			14	56	3.5
	3600	204	1.7	198	2.6	194	3.6	190	4.5	186	5.5	183	6.4	181	7.4	173	10.2	171	11.2	169	12.1	163	15.0	15	164	7.6
45	860	79	0.6	68	1.1	60	1.5	53	2.0	48	2.4	42	2.9	37	3.4									8	46	1.9
	1760	188	1.3	177	2.2	169	3.1	162	4.1	156	5.0	151	5.9	146	6.9	133	9.6							12	134	5.8
	3600	410	3.4	400	5.3	392	7.2	385	9.1	379	11.0	374	12.9	369	14.8	356	20.5							15	339	15.0
47	860	105	0.8	92	1.4	82	2.0	73	2.6	66	3.2	59	3.8	53	4.4									8	63	2.5
	1760	249	1.6	236	2.8	225	4.0	217	5.3	209	6.5	203	7.7	196	8.9									12	181	7.5
	3600	542	4.5	529	7.0	519	9.5	510	12.0	503	14.3	496	17.0	490	19.5									15	452	19.8
53	700	72	0.6	63	1.0	56	1.4	51	1.8	46	2.2	42	2.6	38	3.0									10	36	2.2
	1760	211	1.7	203	2.7	196	3.7	191	4.7	186	5.7	181	6.7	177	7.7	167	10.8	163	11.8	160	12.8			14	158	7.5
	2850	355	3.3	346	5.0	340	6.6	334	8.2	329	9.9	325	11.5	321	13.2	310	18.1	307	19.7	304	21.3	295	26.2	15	296	13.2
56	700	123	0.9	110	1.6	100	2.2	92	2.9	85	3.6	78	4.3	72	4.9									10	70	3.5
	1760	358	2.6	345	4.6	335	6.0	326	7.7	319	9.4	312	11.1	306	12.8	290	17.9							14	276	12.3
	2850	598	5.2	585	8.0	575	10.7	567	13.5	560	16.2	553	19.0	547	21.7	531	30.0							15	510	21.9
59	700	187	1.2	170	2.2	158	3.2	147	4.2	138	5.1	130	6.1											8	135	4.1
	1760	529	3.9	513	6.4	500	8.9	490	11.4	480	13.8	472	16.3	464	18.8									12	445	15.6
	2850	881	7.8	865	11.8	852	15.8	842	19.9	832	23.9	824	27.9	816	31.9									15	770	32.1
65	700	140	1.0	126	1.8	116	2.6	107	3.3	100	4.1	93	4.8	86	5.5	70	7.8							12	71	4.7
	1760	400	3.4	387	5.3	377	7.2	368	9.1	360	11.0	353	12.8	347	14.7	330	20.4	325	22.3	320	24.2	307	29.8	16	300	15.8
	2350	546	5.2	532	7.7	522	10.3	513	12.8	506	15.3	499	17.8	492	20.3	475	27.4	470	30.4	466	32.9	452	40.5	16	445	21.6
68	700	224	1.5	203	2.7	187	3.9	172	5.1	160	6.3	149	7.5	139	8.7									10	135	6.2
	1760	643	4.9	621	7.9	605	10.9	591	14.0	579	17.0	567	20.0	557	23.1	530	32.2	522	35.2	515	38.2			15	495	23.5
	2350	876	7.3	855	11.4	838	15.4	824	19.5	812	23.5	801	27.6	790	31.6	763	43.8	755	47.8	748	51.9			16	715	34.0
615	700	420	2.6	380	4.8	351	7.1	323	9.3	301	11.6	279	13.8											8	292	9.1
	1760	1205	8.1	1164	13.9	1133	19.5	1107	25.2	1084	30.8	1063	36.5											12	997	35.0
	2350	1641	11.9	1601	19.3	1570	27.0	1544	34.6	1521	43.2	1500	49.8											12	1433	47.5
76	575	195	1.3	179	2.3	168	3.3	158	4.3	150	5.4	142	6.4	134	7.4	115	10.4							12	117	6.2
	1400	526	4.0	511	6.4	500	9.0	490	11.5	481	13.9	473	16.4	466	18.8	447	26.3	441	28.7	436	31.2	421	38.6	16	413	20.4
	2050	788	6.9	772	10.5	761	14.2	751	17.8	742	21.4	734	25.0	727	28.6	708	39.5	703	43.1	697	46.7	682	57.6	16	674	30.6
711	575	362	2.2	336	4.0	316	5.9	299	7.7	284	9.6	271	11.4	258	13.3	226	18.8							12	228	11.2
	1400	970	6.5	944	11.0	925	15.5	908	20.0	893	24.5	880	29.0	867	33.5	835	47.1							15	793	34.4
	2050	1450	10.9	1424	17.5	1404	24.1	1387	30.7	1373	37.3	1359	43.9	1347	50.5	1315	70.3							16	1256	54.6
718	575	600	3.3	563	6.3	534	9.3	510	12.3	489	15.4	470	18.4											10	446	15.0
	1400	1590	9.7	1553	17.0	1524	24.3	1500	31.6	1479	39.0	1460	46.3											12	1398	44.6
	2050	2370	15.7	2333	26.9	2304	37.2	2280	47.9	2259	58.6	2240	69.4											12	2178	66.4

Notes: 1. Pressure ratings based on inlet air at standard pressure of 14.7 psia, standard temperature of 68°F, and specific gravity of 1.0.
2. Vacuum ratings based on inlet air at standard temperature of 68°F, discharge pressure of 30" Hg and specific gravity of 1.0.

ROOTS *Universal* RAI-J™
WHISPAIR® ROTARY POSITIVE BLOWERS

FRAMES 33J THRU 56J

Soil Vapor Extraction Blower

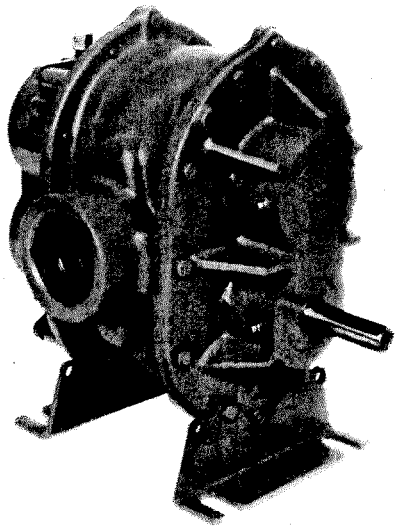

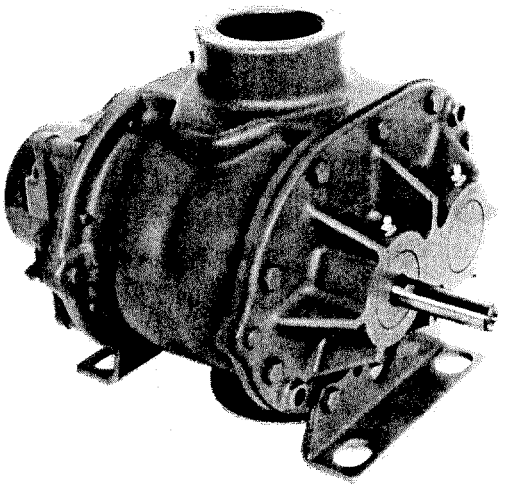

OUTLINE DRAWING & DIMENSIONAL TABLE

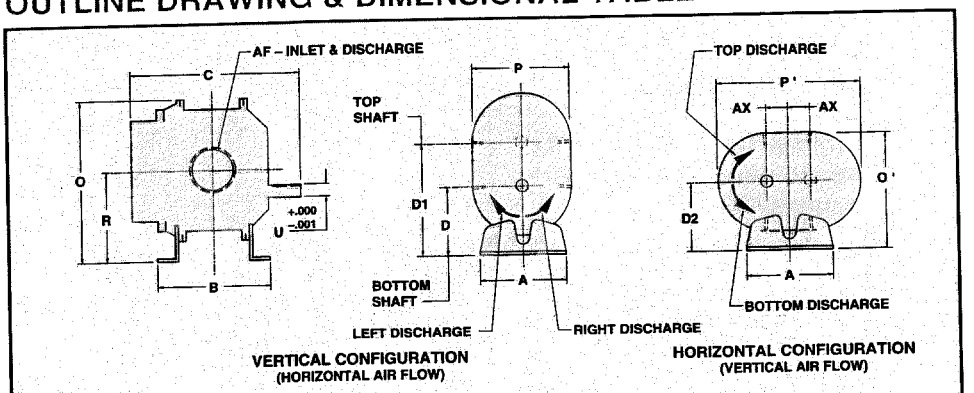

NOTES:
1. All dimensions are in inches.
2. Do not use for construction.

Frame Size	A	B	C	Drive shaft location			O	O'	P	P'	R	U	Keyway	AF Inlet & Discharge Diameter	AX	Approx. Net Wt. (Lbs.)
				D	D1	D2										
33J	7.25	7.63	12.13	5.00	8.50	5.00	12.81	10.00	10.00	12.13	6.75	.750	.188 X .094	2.0 NPT	1.75	84
36J	7.25	10.00	14.63	5.00	8.50	5.00	12.81	10.50	11.00	12.13	6.75	.750	.188 X .094	2.5 NPT	1.75	112
45J	8.00	10.00	15.50	6.25	10.25	6.25	15.06	12.25	12.00	13.63	8.25	.875	.188 X .094	2.5 NPT	2.00	119
47J	8.00	11.75	17.63	6.25	10.25	6.25	15.06	12.25	12.00	13.63	8.25	.875	.188 X .094	3.0 NPT	2.00	138
56J	10.50	11.00	18.00	6.25	11.25	6.75	17.38	14.00	14.50	17.25	8.75	1.125	.250 x .125	4.0 NPT	2.50	180

BASIC BLOWER DESCRIPTION

Patented Universal RAI-J™ Whispair® blowers are heavy duty rotary blowers in a compact, sturdy design engineered for continuous service when operated within speed and pressure/vacuum ratings.

The basic model features a grey iron casing with a computer-designed cast relief for noise and shock suppression, carburized and ground alloy steel spur timing gears secured to steel shafts with a taper mounting and locknut, and grey iron involute impellers. Oversized anti-friction bearings are used, with a cylindrical roller bearing at the drive shaft to withstand V-belt pull.

Detachable rugged steel mounting feet permit easy in-field adaptability to either vertical or horizontal installation requirements. Because of the detachable mounting feet, these units can be easily adapted to any of four drive shaft positions – right hand, left hand, bottom or top.

The Universal RAI-J incorporates thrust control, and has grease lube on the drive end and splash oil lube on the gear end. Roots exclusive "Figure 8" gearbox design improves oil distribution and lengthens bearing and gear life.

All Universal RAI-J blowers are covered by an uncontested warranty that guarantees repair or replacement of any unit that malfunctions for any reason. This protects you for a full 18 months from date of original start-up or 24 months from date of shipment, whichever occurs first.

Uncontested Warranty

For details, see page 3.

UNIVERSAL RAI-J™ PERFORMANCE TABLE

FRAME SIZE	SPEED RPM	4" Hg VACUUM CFM	4" Hg VACUUM BHP	6" Hg VACUUM CFM	6" Hg VACUUM BHP	8" Hg VACUUM CFM	8" Hg VACUUM BHP	10" Hg VACUUM CFM	10" Hg VACUUM BHP	12" Hg VACUUM CFM	12" Hg VACUUM BHP	14" Hg VACUUM CFM	14" Hg VACUUM BHP	15" Hg VACUUM CFM	15" Hg VACUUM BHP	MAX. PRESSURE PSI	MAX. PRESSURE CFM	MAX. PRESSURE BHP
33J	1160	47	0.8	40	1.1	33	1.4	27	1.7							7	28	2.4
	2800	148	2.0	141	2.7	134	3.4	128	4.1	121	4.9	113	5.6			12	116	9.5
	3600	197	2.7	190	3.6	184	4.6	177	5.3	170	6.3	163	7.2	159	7.6	12	165	12.4
36J	1160	83	1.2	74	1.7	65	2.2	55	2.7							7	57	3.8
	2800	251	3.2	241	4.4	232	5.7	223	6.6	213	7.9	202	9.1			7	224	9.5
	3600	332	4.4	323	6.0	313	7.6	304	8.7	294	10.3	284	11.9	278	12.7	7	306	12.5
45J	860	66	1.1	56	1.5	46	1.9									7	37	3.4
	1760	175	2.2	164	3.1	154	4.0	144	4.9	134	5.8					10	133	9.6
	3600	398	5.2	387	7.1	377	8.9	367	10.3	356	12.2	345	14.1	339	15.0	10	356	20.5
47J	860	89	1.3	76	1.9	63	2.5	51	3.0							7	53	4.4
	1760	233	2.9	220	4.1	207	5.3	194	6.3	181	7.5					7	196	9.0
	3600	526	6.9	513	9.3	500	11.8	488	13.6	474	16.1	460	18.5	452	19.8	7	490	19.5
56J	700	108	1.5	95	2.2	82	2.9	70	3.5							7	72	4.9
	1760	342	4.3	329	5.9	316	7.6	304	9.0	291	10.6	276	12.3			10	290	17.9
	2850	583	7.9	570	10.6	557	13.2	545	15.2	532	17.9	517	20.6	510	21.9	10	531	30.0

Notes: 1. Vacuum ratings based on inlet air at standard temperature of 68°F, discharge pressure of 30" Hg and specific gravity of 1.0.
2. Pressure ratings based on inlet air at standard pressure of 14.7 psia, standard temperature of 68°F, and specific gravity of 1.0.

LOWER AIR PULSATION

Patented Whispair blowers operate with up to 50% less pressure pulsation than conventional blowers due to the pressure equalizing effect of the Whispair design.

In conventional blowers, as the impeller opens up to the outlet port, the higher pressure air in the discharge line rapidly expands into the lower pressure pocket formed by the impeller and the blower case. The resulting shock wave strikes the advancing surface of the impeller at sonic velocity. Four pressure pulses occur each revolution, transmitting shock loads to the gears and bearings.

LONGER BEARING LIFE

The pre-pressurization of the low pressure pocket through the Whispair cavity smooths the pulsations and results in less shock being transmitted through the impellers to the bearings, resulting in approximately 20% longer bearing life.

LOWER VIBRATION

The reduction in the magnitude of the pressure pulsation results in smoother operation.

LOWER NOISE

The pressure pulses, inherent in the rotary-lobe design, are also the major source of blower noise. The rapid backflow of air into the blower from the discharge line, four times per revolution, results in high noise levels in the conventional blower. The Whispair design controls the backflow of air into the blower, reducing noise by approximately 5 dB vacuum, 3 dB pressure.

Selected Unit

Model: 22 URAI Summary: <list>
Inlet Volume (ACFM): 30 SCFM: 30 Gas: AIR
Inlet Pressure (PSIA): 14.70 K-Value: 1.395
Inlet Temp(Deg.F): 68 Specific Gravity: 0.992
Discharge Pressure (PSIA): 26.70 Molecular Weight: 28.751
Differential Press. (PSI): 12.00 100% Elevation/Feet: 0
Ambient Pressure (PSIA): 14.70 Relative Humidity: 85%
Speed (RPM): 3648 69% Amb/Jet Temperature: 90
Brake Horsepower: 3.2 Motor Type: TEFC
Temperature Rise (Deg. F): 202 89%

Discharge Temperature (Deg. F): 270
Discharge Volume (ACFM): 22
Gear Tip Speed (FPM): 2389
Estimated B10 Bearing Life (HRS): 144000
Estimated Noise Level at 1 Meter (DBA): 87.5

Selected Unit

Model: 32 URAI Summary: <list>
Inlet Volume (ACFM): 40 SCFM: 37 Gas: AIR
Inlet Pressure (PSIA): 14.70 K-Value: 1.395
Inlet Temp(Deg.F): 90 Specific Gravity: 0.984
Discharge Pressure (PSIA): 25.70 Molecular Weight: 28.523
Differential Press. (PSI): 11.00 73% Elevation/Feet: 0
Ambient Pressure (PSIA): 14.70 Relative Humidity: 85%
Speed (RPM): 1844 51% Amb/Jet Temperature: 90
Brake Horsepower: 4.1 Motor Type: TEFC
Temperature Rise (Deg. F): 214 94%

Discharge Temperature (Deg. F): 304
Discharge Volume (ACFM): 31
Gear Tip Speed (FPM): 1690
Estimated B10 Bearing Life (HRS): 277000
Estimated Noise Level at 1 Meter (DBA): 84.4

Air Sparging Blower

Selected Unit

Model: 45 URAI Summary: <list>
Inlet Volume (ACFM): 300 SCFM: 223 Gas: AIR
Inlet Pressure (PSIA): 11.76 K-Value: 1.395
Inlet Temp(Deg.F): 90 Specific Gravity: 0.984
Discharge Pressure (PSIA): 14.70 Molecular Weight: 28.523
Inlet Vacuum (HG): 6.00 40% Elevation/Feet: 0
Ambient Pressure (PSIA): 14.70 Relative Humidity: 85%
Speed (RPM): 2890 80% Amb/Jet Temperature: 90
Brake Horsepower: 5.4 Motor Type: TEFC
Temperature Rise (Deg. F): 50 22%

Discharge Temperature (Deg. F): 140
Discharge Volume (ACFM): 261
Gear Tip Speed (FPM): 3029
Estimated B10 Bearing Life (HRS): 2388000
Estimated Noise Level at 1 Meter (DBA): 83.9

SVE Blower

Selected Unit

Model: 32 URAI Summary: <list>
Inlet Volume (ACFM): 40 SCFM: 37 Gas: AIR
Inlet Pressure (PSIA): 14.70 K-Value: 1.395
Inlet Temp(Deg.F): 90 Specific Gravity: 0.984
Discharge Pressure (PSIA): 25.95 Molecular Weight: 28.523
Differential Press. (PSI): 11.25 75% Elevation/Feet: 0
Ambient Pressure (PSIA): 14.70 Relative Humidity: 85%
Speed (RPM): 1854 51% Amb/Jet Temperature: 90
Brake Horsepower: 4.3 Motor Type: TEFC
Temperature Rise (Deg. F): 220 97%

Discharge Temperature (Deg. F): 310
Discharge Volume (ACFM): 31
Gear Tip Speed (FPM): 1700
Estimated B10 Bearing Life (HRS): 255000
Estimated Noise Level at 1 Meter (DBA): 84.7

Dwyer®

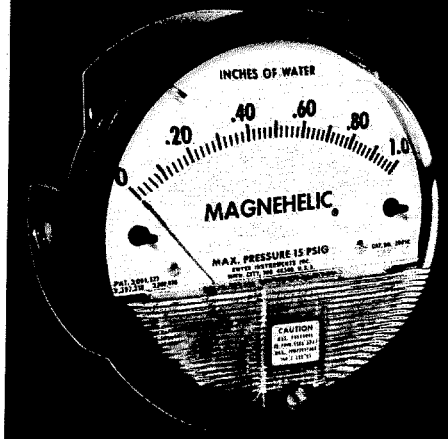

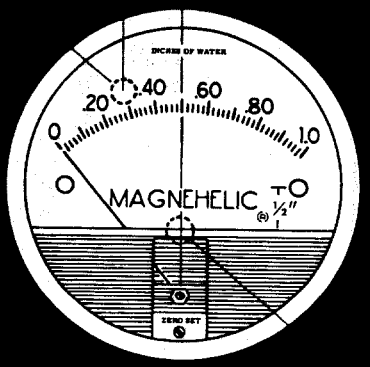

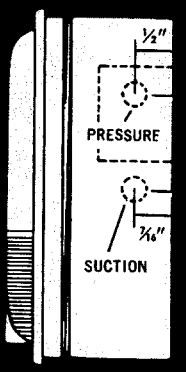

Select the Dwyer Magnehelic® gage for high accuracy – guaranteed within 2% of full scale – and for the wide choice of 81 ranges available to suit your needs precisely. Using Dwyer's simple, frictionless Magnehelic® movement, it quickly indicates low air or non-corrosive gas pressures – either positive, negative (vacuum) or differential. The design resists shock, vibration and over-pressures. No manometer fluid to evaporate, freeze or cause toxic or leveling problems. It's inexpensive, too.

Widely used to measure fan and blower pressures, filter resistance, air velocity, furnace draft, pressure drop across orifice plates, liquid levels with bubbler systems and pressures in fluid amplifier or fluidic systems. It also checks gas-air ratio controls and automatic valves, and monitors blood and respiratory pressures in medical care equipment.

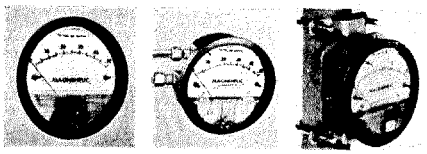

Flush ...Surface...or Pipe Mounted

MOUNTING. A single case size is used for most ranges of Magnehelic® gages. They can be flush or surface mounted with standard hardware supplied. With the optional A-610 Pipe Mounting Kit they may be conveniently installed on horizontal or vertical 1¼" - 2" pipe. Although calibrated for vertical position, many ranges above 1" may be used at any angle by simply re-zeroing. However, for maximum accuracy, they must be calibrated in the same position in which they are used. These characteristics make Magnehelic® gages ideal for both stationary and portable applications. A 4⁹⁄₁₆" hole is required for flush panel mounting. Complete mounting and connection fittings plus instructions are furnished with each instrument.

VENT VALVES

In applications where pressure is continuous and the Magnehelic® gage is connected by metal or plastic tubing which cannot be easily removed, we suggest using Dwyer A-310A vent valves to connect gage. Pressure can then be removed to check or re-zero the gage.

HIGH AND MEDIUM PRESSURE MODELS

Installation is similar to standard gages except that a 4¹³⁄₁₆" hole is needed for flush mounting. The medium pressure construction is rated for internal pressures up to 35 psig and the high pressure up to 80 psig. Available in all ranges. Because of larger case, will not fit in portable case. Weight 1 lb., 10 oz (Installation of the A-321 safety relief valve on standard Magnehelic® gages often provides adequate protection against infrequent overpressure; see Bulletin S-101).

PHYSICAL DATA

Ambient temperature range: 20° to 140° F. *
Rated total pressure: –20" Hg. to 15 psig. †
Overpressure: Relief plug opens at approximately 25 psig.
Connections: ⅛" NPT female high and low pressure taps, duplicated — one pair side and one pair back.
Housing: Die cast aluminum. Case and aluminum parts iridite-dipped to withstand 168 hour salt spray test. Exterior finish is baked dark gray hammerloid.
Accuracy: Plus or minus 2% of full scale (3% on -0 and 4% on -00 ranges), throughout range at 70°F.
Standard accessories: Two ⅛" NPT plugs for duplicate pressure taps, two ⅛" pipe thread to rubber tubing adapters and three flush mounting adapters with screws. (Mounting ring and snap ring retainer substituted for 3 adapters in MP & HP gage accessories.)
Weight: 1 lb. 2 oz.

*Low temperature models available as special option.
†For applications with high cycle rate within gage total pressure rating, next higher rating is recommended. See Medium and High pressure options at lower left.

OPTIONS AND ACCESSORIES

Transparent overlays
Furnished in red and green to highlight and emphasize critical pressures.

Adjustable signal flag
Integral with plastic gage cover; has external reset screw. Available for most ranges except those with medium or high pressure construction. Can be ordered with gage or separate.

LED Setpoint Indicator
Bright red LED on right of scale shows when setpoint is reached. Field adjustable from gage face, unit operates on 12-24 VDC. Requires MP or HP style cover and bezel.

Portable units
Combine carrying case with any Magnehelic® gage of standard range (not high pressure). Includes 9 ft of ⅜" I.D. rubber tubing, standhang bracket and terminal tube with holder.

Air filter gage accessory package
Adapts any standard Magnehelic® for use as an air filter gage. Includes aluminum surface mounting bracket with screws, two 5 ft. lengths of ¼" aluminum tubing two static pressure tips and two molded plastic vent valves, integral compression fittings on both tips and valves.

Dwyer Instruments, Inc. P.O. Box 373/Michigan City, Indiana 46361/Phone 219 879-8000/Fax 219 872-9057 • U.K. Phone (01494)-461707 • Australia Phone (02) 9756-5355

SVE Side PI's

Quality design and construction features

Bezel provides flange for flush mounting in panel.

Clear plastic face is highly resistant to breakage. Provides undistorted viewing of pointer and scale.

Precision litho-printed scale is accurate and easy to read.

Red tipped pointer of heat treated aluminum tubing is easy to see. It is rigidly mounted on helix shaft.

Pointer stops of molded rubber prevent pointer over-travel without damage.

"Wishbone" assembly provides mounting for helix, helix bearings and pointer shaft.

Sapphire bearings are shock-resistant mounted; provide virtually friction-free motion for helix. Motion damped with high viscosity silicone fluid.

Zero adjustment screw is conveniently located in plastic cover, accessible without removing cover. "O" ring seal provides pressure tightness.

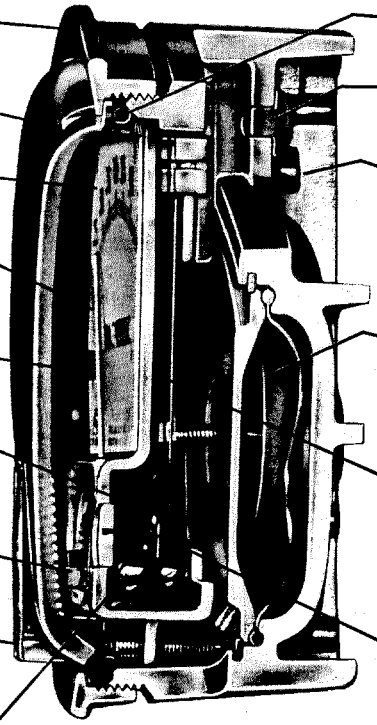

"O" ring seal for cover assures pressure integrity of case.

Blowout plug of silicone rubber protects against overpressure on 15 PSIG rated models. Opens at approximately 25 PSIG.

Die cast aluminum case is precision made. Iridite-dipped to withstand 168 hour salt spray test. Exterior finished in baked dark gray hammerloid. One case size used for all standard pressure ranges, and for both surface and flush mounting.

Silicone rubber diaphragm with integrally molded "O" ring is supported by front and rear plates. It is locked and sealed in position with a sealing plate and retaining ring. Diaphragm motion is restricted to prevent damage due to overpressures.

Calibrated range spring is a flat leaf of Swedish spring steel in temperature compensated design. Small amplitude of motion assures consistency and long life. It reacts to pressure on diaphragm. Live length adjustable for calibration.

Alnico magnet mounted at one end of range spring rotates helix without mechanical linkages.

Helix is precision milled from an alloy of high magnetic permeability, deburred and annealed in a hydrogen atmosphere for best magnetic qualities. Mounted in jeweled bearings, it turns freely to align with magnetic field of magnet to transmit pressure indication to pointer.

Dual Scale English/Metric Models			
Model Number	Range, In. W.C.	Range, Pa or kPa	Price
2000-0D	0-0.5	0-125 Pa	$50.00
2001D	0-1.0	0-250 Pa	50.00
2002D	0-2.0	0-500 Pa	50.00
2003D	0-3.0	0-700 Pa	50.00
2004D	0-0.4	0-1.0 kPa	50.00
2006D	0-6.0	0-1.5 kPa	50.00
2008D	0-8.0	0-2.0 kPa	50.00
2001OD	0-10	0-2.5 kPa	50.00

SERIES 2000 MAGNEHELIC®— MODELS AND RANGES

The models below will fulfill most requirements. Page 5 also shows examples of special models built for OEM customers. For special scales furnished in ounces per square inch, inches of mercury, metric units, etc., contact the factory.

Model Number	Range Inches of Water	Price
2000-00†	0-.25	$55.00
2000-0†	0-.50	50.00
2001	0-1.0	50.00
2002	0-2.0	50.00
2003	0-3.0	50.00
2004	0-4.0	50.00
2005	0-5.0	50.00
2006	0-6.0	50.00
2008	0-8.0	50.00
2010	0-10	50.00
2015	0-15	50.00
2020	0-20	50.00
2025	0-25	50.00
2030	0-30	50.00
2040	0-40	50.00
2050	0-50	50.00
2060	0-60	50.00
2080	0-80	50.00
2100	0-100	50.00
2150	0-150	50.00

Model Number	Range Zero Center Inches of Water	Price
2300-0†	.25-0-.25	$55.00
2301	.5-0-.5	55.00
2302	1-0-1	55.00
2304	2-0-2	55.00
2310	5-0-5	55.00
2320	10-0-10	55.00
2330	15-0-15	55.00

Model Number	Range PSI	Price
2201	0-1	$50.00
2202	0-2	50.00
2203	0-3	50.00
2204	0-4	50.00
2205	0-5	50.00
2210*	0-10	81.00
2215*	0-15	81.00
2220*	0-20	81.00
2230**	0-30	100.00

*MP option standard
**HP option standard

Dual Scale Air Velocity Units

Model Number	Range in W.C.I Velocity, F.P.M.	Price
2000-00AV	0-.25/300-2000	$55.00
2000-0AV	0-.50/500-2800	50.00
2001AV	0-1.0/500-4000	50.00
2002AV	0-2.0/1000-5600	50.00
2010AV	0-10/2000-12500	50.00

For use with pitot tube.

Model Number	Range MM of Water	Price
2000-6MM†	0-6	$55.00
2000-10MM	0-10	50.00
2000-25MM	0-25	50.00
2000-50MM	0-50	50.00
2000-80MM	0-80	50.00
2000-100MM	0-100	

Zero Center Ranges

2300-20MM†	10-0-10	$55.00

Model Number	Range, CM of Water	Price
2000-15CM	0-15	$50.00
2000-20CM	0-20	50.00
2000-25CM	0-25	50.00
2000-50CM	0-50	50.00
2000-80CM	0-80	50.00
2000-100CM	0-100	50.00
2000-150CM	0-150	50.00
2000-200CM	0-200	50.00
2000-250CM	0-250	50.00
2000-300CM	0-300	50.00

Zero Center Ranges

2300-4CM	2-0-2	$55.00
2300-10CM	5-0-5	55.00
2300-30CM	15-0-15	55.00

†These ranges calibrated for vertical scale position.

Model Number	Range, Pascals	Price
2000-60 Pa†	0-60	$55.00
2000-125 Pa†	0-125	50.00
2000-250 Pa	0-250	50.00
2000-500 Pa	0-500	50.00
2000-750 Pa	0-700	50.00

Zero Center Ranges

2300-250 Pa	125-0-125	$55.00
2300-500 Pa	250-0-250	55.00

Model Number	Range, Kilopascals	Price
2000-1 kPa	0-1	$50.00
2000-1.5 kPa	0-1.5	50.00
2000-2 kPa	0-2	50.00
2000-3 kPa	0-3	50.00
2000-4 kPa	0-4	50.00
2000-5 kPa	0-5	50.00
2000-8 kPa	0-8	50.00
2000-10 kPa	0-10	50.00
2000-15 kPa	0-15	50.00
2000-20 kPa	0-20	50.00
2000-25 kPa	0-25	50.00
2000-30 kPa	0-30	50.00

Zero Center Ranges

2300-1 kPa	.5-0-.5	$55.00
2300-3 kPa	1.5-0-1.5	55.00

Accessories
A-310A, 3-Way Vent Valve $6.90
A-321, Safety Relief Valve $8.60
A-432, Portable Kit $19.40
A-605, Air Filter Kit $19.40
A-610, Pipe Mount Kit $10.90
Scale Overlays — Red, Green, Mirrored or Combination, Specify Locations Add $5.00 Net

Options — To order, add suffix I.E. 2001-ASF
ASF (Adjustable Signal Flag) ..... add $10.90
HP (High Pressure Option) ..... add $50.00
LT (Low Temperatures to -20°F) $3.00
MP (Med. Pressure Option) ..... add $31.00
SP (Setpoint Indicator) ..... add $50.00

Special Purpose Ranges
Scale No. 2401 — Square Root, Specify Range
Scale No. 2402 — Blank Scale, Specify Range
Model 2000-00N, range -.05 to +.20" W.C. For room pressure monitoring $55.00

Air Sparging Side PI's

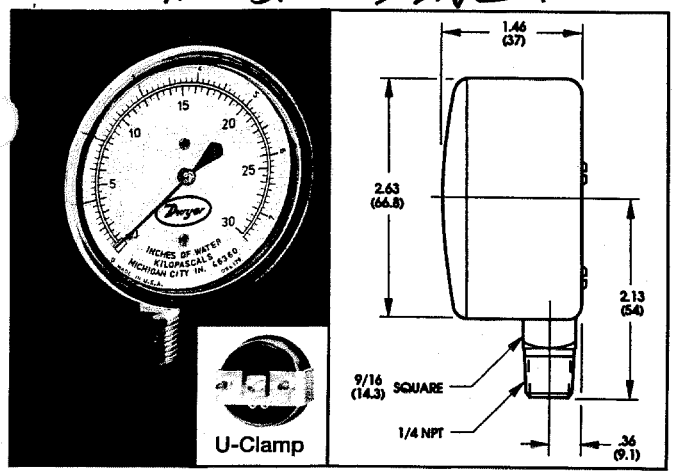

Series 61000 gages feature an extra sensitive bronze diaphragm for ASME Grade A accuracy in ranges to 100 inches w.c. The Series 62000 employs a bronze Bourdon tube for ranges to 300 psig with Grade B accuracy. Both measure pressures of air, natural gas and other compatible gases and liquids.

SERIES 61000 62000 Pressure Gages

Exceptional Value in a 2½" Gage

PHYSICAL DATA

Dial/Pointer: Aluminum
Housing: Steel with black baked enamel finish
Diaphragm/Bourdon Tube: Phosphor bronze
Connection: ¼" NPT bottom-std. ¼" NPT back 61000U, 62000U
Operating Mechanism: Polycarbonate and brass
Accuracy:
61000, ASME Grade A — 1% middle half of scale, 2% remainder
61015 only — 1% middle half of scale, 3% remainder
62000, ASME Grade B — 2% middle half of scale, 3% remainder
Temperature Range: -40 to 160°F (-40 to 71°C)

Model Number	Range IN.W.C.	Range kPa	Price
61015	0-15	0-4	$30.50®
61030	0-30	0-7.5	30.50®
61060	0-60	0-15	30.50®
61100	0-100	0-25	30.50®
Model Number	**Range PSIG**	**Range kPa**	**Price**
62030	0-30	0-210	$10.00
62060	0-60	0-400	10.00
62100	0-100	0-700	10.00
62160	0-160	0-1100	10.00
62200	0-200	0-1400	10.00
62300	0-300	0-2100	10.00

Options — Add options as a suffix.
U ..U-clamp (panel mount)...add **$7.00** (61000)
add **$6.50** (62000)

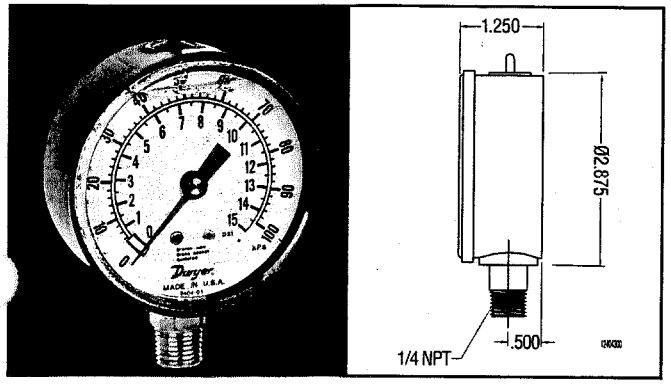

The Series 63000 Liquid-Filled Pressure Gages offer superior performance in applications where vibration, pulsation, mechanical shock, and pressure spikes are common.

Series 63000 Liquid-Filled Gages

2½" Dual Scale Dial, ASME Grade B

PHYSICAL DATA

Accuracy: ASME Grade B, ±3-2-3%.
Media: Clean, noncorrosive liquids or gases.
Bourdon Tube: Phosphor bronze.
Dial/Pointer: Aluminum.
Housing: ABS plastic.
Connection: ¼" NPT(M), brass bottom.
Fill Solution: Glycerine.
Weight: 1 lb (0.5 kg).

MODEL NUMBER	RANGE	PRICE
63030V	0 to 30" Hg (vac) (0 to -100 kPa)	$17.50
63015	0 to 15 psi (0 to 100 kPa)	17.50
63030	0 to 30 psi (0 to 200 kPa)	17.50
63060	0 to 60 psi (0 to 400 kPa)	17.50
63100	0 to 100 psi (0 to 700 kPa)	17.50
63200	0 to 200 psi (0 to 1400 kPa)	17.50
63300	0 to 300 psi (0 to 2000 kPa)	17.50

Series 67000 Digital Pressure Gages

Low Cost, ±2% Accuracy

CE

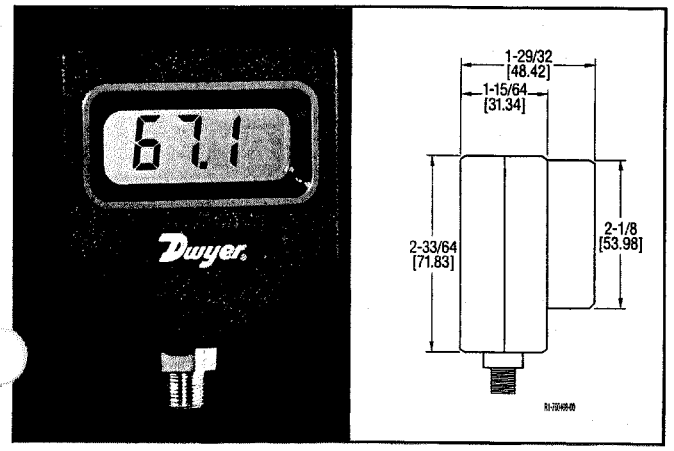

The Series 67000 Digital Pressure Gages are an ideal alternative to mechanical gages. Gages feature low battery indication and manual zero adjustment for easy recalibration.

PHYSICAL DATA

Accuracy: ±2% of reading.
Media: Clean, noncorrosive liquids or gases.
Max. Overpressure: 700 psi.
Connection: ⅛" NPT(M), brass.
Display: 3-digit LCD, 2" H.
Power: One 9V alkaline battery (included).
Weight: 1 lb (0.5 kg).

STOCKED MODELS

MODEL NUMBER	RANGE	RESOLUTION	PRICE
67100	0 to 29.9" Hg (vac) 0 to 99.9 psig	0.1" Hg 0.1 psig	$90.00®
67500	0 to 500 psig	1 psig	90.00®

FI's

Series DS-200 and DS-300 Flow Sensors

For use with the Dwyer Capsuhelic® differential pressure gage to measure high flow rates of air or water in pipes.

The Dwyer flow sensor is an averaging pitot tube providing accurate and convenient flow rate sensing. When purchased with a Dwyer Capsuhelic® differential pressure gage of appropriate range, the result is a flow indicating system delivered off the shelf at an economical price.

Pitot tubes have been used in flow measurement for years. Conventional pitot tubes sense velocity pressure at only one point in the flowing stream. Therefore, a series of measurements must be taken across the stream to obtain a meaningful average flow rate. The Dwyer flow sensor eliminates the need for "traversing" the flowing stream because of its multiple sensing points and built-in averaging capability.

Dwyer Series DS-300 flow sensors are designed to be inserted in the pipeline through a compression fitting. They are furnished with instrument shut-off valves on both pressure connections. Valves are fitted with ⅛" NPT female connections. Accessories include adapters with ¼" SAE 45° flared ends compatible with hoses supplied with the Model A-471 Portable Capsuhelic kit. Standard valves are rated at 200 psig (13.7 bar) and 200°F (93.3°C). Where valves are not required, they can be omitted at reduced cost. Series DS-300 flow sensors are available for pipe sizes from 1" to 10". If replacing a DS-200 flow sensor or using an A-160 thredolet with a DS-300, an optional ¼" X ⅜" bushing, P/N A-161 is required.

DS-200 models are also available in ten insertion lengths from 1" - 10". Operation is similar to DS-300 units. Basic differences are the multi-turn shut-off valves, ⅜" NPT mounting and installed ¼" SAE 45° flared pressure connections.

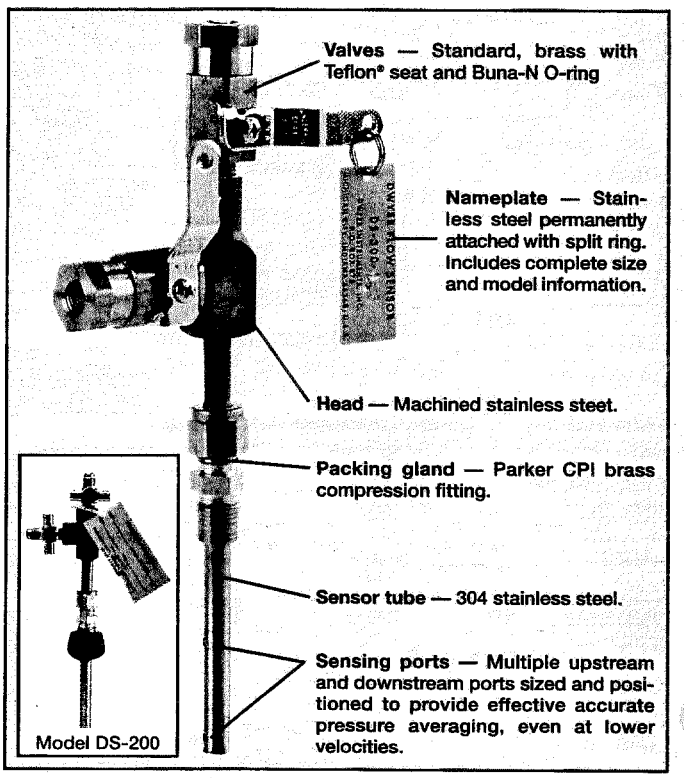

Prices — Select model with suffix which matches pipe size

DS-200-1"	**$139.75Ⓑ**	DS-300-1"	**$95.00**
DS-200-1¼"	**142.50Ⓑ**	DS-300-1¼"	**95.00**
DS-200-1½"	**142.50Ⓑ**	DS-300-1½"	**95.00**
DS-200-2"	**142.50Ⓑ**	DS-300-2"	**95.00**
DS-200-2½"	**152.50Ⓑ**	DS-300-2½"	**95.00**
DS-200-3"	**174.25Ⓑ**	DS-300-3"	**109.00**
DS-200-4"	**188.00Ⓑ**	DS-300-4"	**129.00**
DS-200-6"	**296.75Ⓑ**	DS-300-6"	**165.00**
DS-200-8"	**330.75Ⓑ**	DS-300-8"	**209.00**
DS-200-10"	**349.75Ⓑ**	DS-300-10"	**249.00**

A-160 Thredolet, ⅜" NPT, forged steel, 3000 psi **6.60**
A-161 Brass Bushing, ¼" x ⅜" **1.00**
Less Valves (DS-300) To order, add suffix -LV ..... deduct **15.00**
Ⓑ Items subject to Schedule B discounts

Model A-471 Portable Kit

The Dwyer Series 4000 Capsuhelic® differential pressure gage is ideally suited for use as a read-out device with the DS-300 Flow Sensors. The gage may be used on system pressures of up to 500 PSIG even when the flow sensor differential pressure to be read is less than 0.5" w.c. With accuracy of ±3% of full scale, the Capsuhelic® gage can be used in ambient temperatures from 32°F to 200°F. Zero and range adjustments are made from outside the gage. The standard gage with a die cast aluminum housing can be used with the flow sensor for air or oil applications. For water flow measurements, the optional forged brass housing should be specified. The Capsuhelic gage may be panel or surface mounted and permanently plumbed to the flow sensor if desired. The optional A-610 pipe mounting bracket allows the gage to be easily attached to any 1¼"-2" horizontal or vertical pipe.

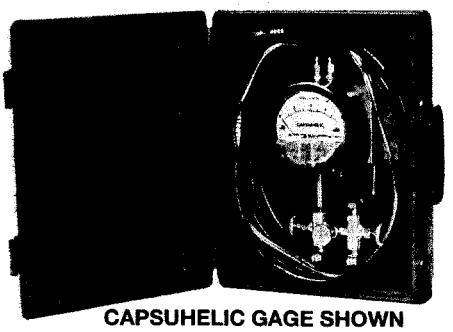

CAPSUHELIC GAGE SHOWN INSTALLED IN A-471 PORTABLE KIT

For portable operation, the A-471 Capsuhelic Portable Gage Kit is available complete with tough polypropylene carrying case, mounting bracket, 3-way manifold valve, two 10' high pressure hoses, and all necessary fittings. See Bulletin A-30-P for complete information on the Capsuhelic gage.

Dwyer Instruments, Inc. P.O. Box 373/Michigan City, Indiana 46361/Phone 219 879-8000/Fax 219 872-9057 • U.K. Phone (01494)-461707 • Australia Phone (02) 9756-5355

How To Order

Merely determine the pipe size into which the flow sensor will be mounted and designate the size as a suffix to Model DS-300. For example, a flow sensor to be mounted in a 2" pipe would be a Model No. DS-300-2".

Optional and Accessories

Less Valves (DS-300) — To order, add suffix -LV. Example: DS-300-2"-LV
A-160 Thredolet — ⅜" NPT, forged steel, 3000 psi
A-161 Bushing — ¼" x ⅜" brass bushing

For non-critical water and air flow monitoring applications, the chart below can be utilized for ordering a stock Capsuhelic® differential pressure gage for use with the DS-300 flow sensor. Simply locate the maximum flow rate for the media being measured under the appropriate pipe size and read the Capsuhelic® gage range in inches of water column to the left. The DS-300 sensor is supplied with installation and operating instructions, Bulletin F-50. It also includes complete flow conversion information for the three media conditions shown in the chart below. This information enables the user to create a complete differential pressure to flow rate conversion table for the sensor and differential pressure gage employed. Both the Dwyer Capsuhelic® gage and flow sensor feature excellent repeatability so, once the desired flow rate is determined, deviation from that flow in quantitative measure can be easily determined. You may wish to order the adjustable signal flag option for the Capsuhelic® gage to provide an easily identified reference point for the proper flow.

Capsuhelic® gages with special ranges and/or direct reading scales in appropriate flow units are available on special order for more critical applications. Customer supplied data for the full scale flow (quantity and units) is required along with the differential pressure reading at that full flow figure. Prior to ordering a special Capsuhelic® differential pressure gage for flow read-out, we recommend you request Bulletin F-50 to obtain complete data on converting flow rates of various media to the sensor differential pressure output. With this bulletin and after making a few simple calculations, the exact range gage required can easily be determined.

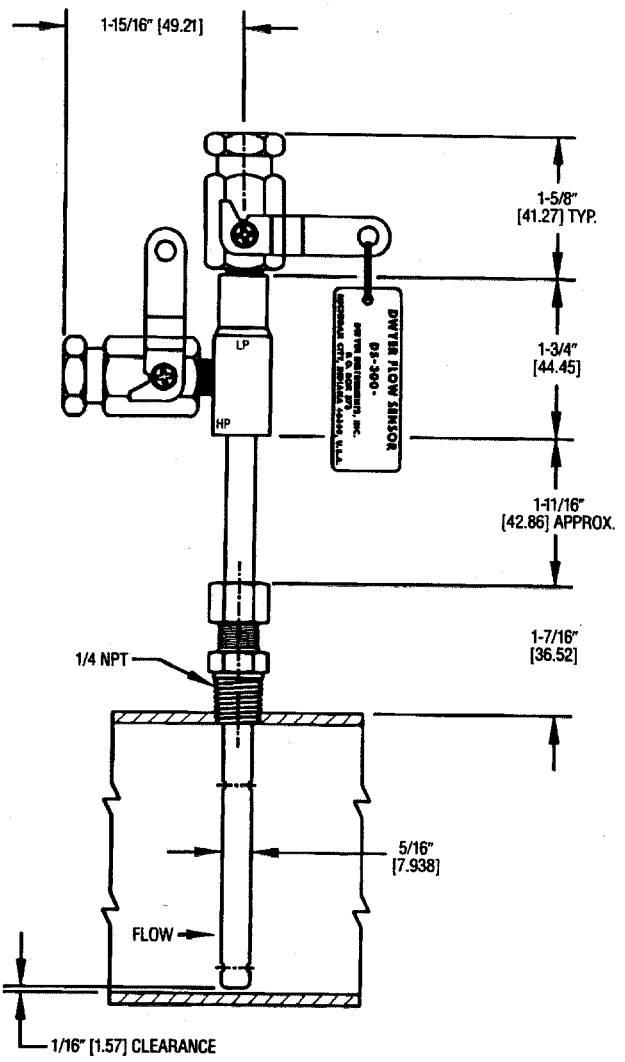

GAGE RANGE (IN. W.C.)	MEDIA @ 70°F	FULL RANGE FLOWS BY PIPE SIZE (APPROXIMATE)									
		1"	1¼"	1½"	2"	2½"	3"	4"	6"	8"	10"
2	Water (GPM)	4.8	8.3	11.5	20.5	30	49	86	205	350	560
	Air @ 14.7 PSIA (SCFM)	19.0	33.0	42.0	65.0	113	183	330	760	1340	2130
	Air @ 100 PSIG (SCFM)	50.0	90.5	120.0	210.0	325	510	920	2050	3600	6000
5	Water (GPM)	7.7	14.0	18.0	34.0	47	78	138	320	560	890
	Air @ 14.7 PSIA (SCFM)	30.0	51.0	66.0	118.0	178	289	510	1200	2150	3400
	Air @ 100 PSIG (SCFM)	83.0	142.0	190.0	340.0	610	820	1600	3300	5700	10000
10	Water (GPM)	11.0	19.0	25.5	45.5	67	110	195	450	800	1260
	Air @ 14.7 PSIA (SCFM)	41.0	72.0	93.0	163.0	250	410	725	1690	3040	4860
	Air @ 100 PSIG (SCFM)	120.0	205.0	275.0	470.0	740	1100	2000	4600	8100	15000
25	Water (GPM)	18.0	32.0	40.5	72.0	108	173	310	720	1250	2000
	Air @ 14.7 PSIA (SCFM)	63.0	112.0	155.0	255.0	390	640	1130	2630	4860	7700
	Air @ 100 PSIG (SCFM)	185.0	325.0	430.0	760.0	1200	1800	3300	7200	13000	22000
50	Water (GPM)	25.0	44.0	57.5	100.0	152	247	435	1000	1800	
	Air @ 14.7 PSIA (SCFM)	90.0	161.0	205.0	360.0	560	900	1600	3700	6400	
	Air @ 100 PSIG (SCFM)	260.0	460.0	620.0	1050.0	1700	2600	4600	10000	18500	
100	Water (GPM)	36.5	62.0	82.0	142.0	220	350	620	1500		
	Air @ 14.7 PSIA (SCFM)	135.0	230.0	300.0	505.0	800	1290	2290	5000		
	Air @ 100 PSIG (SCFM)	370.0	660.0	870.0	1500.0	2300	3600	6500	15000		

NIXTOX® PDB

STEEL VESSELS

MODEL	NOMINAL FLOW (CFM)	MAX PRESS (PSIG)	MAX TEMP (deg F)	FLG. INLET / OUTLET (IN)	DIAMETER / APPROX HEIGHT (IN)	STANDARD ADSORBENT FILL (LBS)	SHIPPING WEIGHT - STANDARD FILL (LBS)
N-500 PDB	500	15	180	6 / 6	38 / 74	1000	1875
N-750 PDB	750	15	180	6 / 6	46 / 87	1500	2460
N-1000 PDB	1000	15	180	8 / 8	57 / 90	2200	3130
N-1500 PDB	1500	15	180	8 / 8	68 / 91	3700	5550
N-2000 PDB	2000	15	180	10 / 10	85 / 106	6200	8915

These are Rentable

NOTES:
1) Nominal design flow may be conservative. Desired contact time may allow higher or lower flow rates.
2) Dry virgin activated or reactivated carbon provided as standard adsorbent.
3) Maximum adsorbent fill is based on a bed density of 29 lb/ft^3.
4) Maximum adsorbent fill can differ based on variable bed density and alternate adsorbents.

The NIXTOX Series Modular Adsorbers are designed for applications with relatively high flow rates or where more on-line adsorbent is required. Model numbers reflect nominal design flow for air and other vapors. The vessels are fabricated of carbon steel and provided with a high solids epoxy lining. Where process conditions dictate, the vessels can be fabricated from other materials such as stainless steel. In addition, a different lining can be substituted for the high solids epoxy. Manways are 18 inches in diameter for easy access. The vessels are provided with lifting lugs and fork channels. *Specifications and properties are subject to change without notice.*

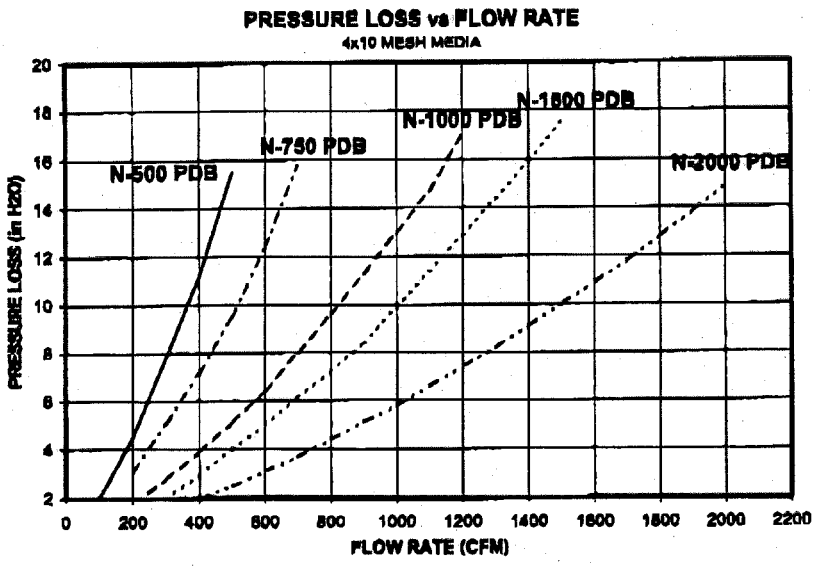

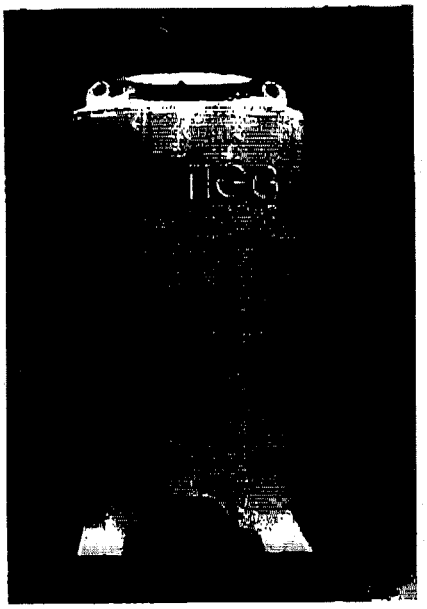

N-750 PDB ILLUSTRATION

TIGG corporation

P.O. Box 11661
Pittsburgh, PA 15228
(412)257-9580
(412)257-8520 (facsimile)
www.tigg.com
information@tigg.com

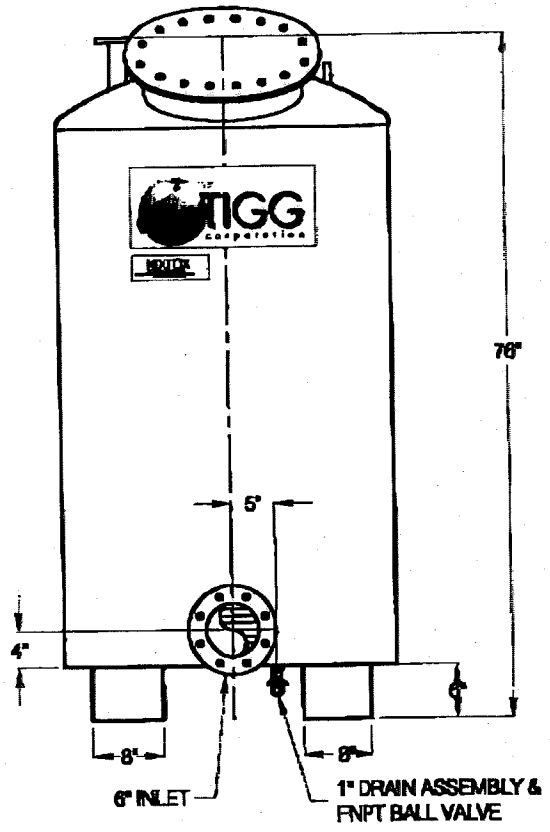

ELEVATION

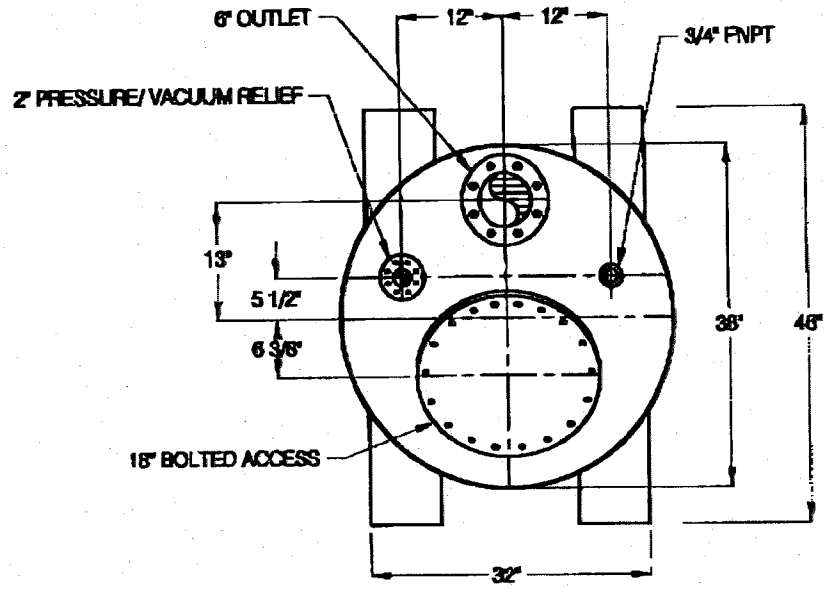

PLAN

VESSEL MATERIALS	LINING	EXTERIOR PAINT	TOP HEAD/ BOTTOM PLATE THICKNESS	SHELL THICKNESS	INTERNALS	ADSORBENT OUTLET ASSEMBLY	CONDENSATE DRAIN ASSEMBLY	VOLUME OF VESSEL	STANDARD CARBON FILL	SHIP WT. (STANDARD FILL)	CARBON TYPE	MAXIMUM OPERATING PRESSURE	MAXIMUM OPERATING TEMPERATURE
CARBON STEEL	[illegible]	ACRYLIC WATERBORNE PRIMER & ENAMEL	3/16" 1/4"	3/16"	PLENUM	18" BOLTED ACCESS	SCHEDULE 80 PVC	34.5 FT³ (NOT INCLUDING [illegible] OR VOL [illegible] PLENUM)	1000	1675	TIGG SC 0410 VAPOR PHASE	15 PSIG	180°F

TIGG corporation
PHONE [illegible] FAX [illegible]
N-50[illegible] DB
DATE: 2/5/99

OBERDORFER

CLOSE COUPLED BRONZE ROTARY GEAR PUMP

MODEL 994 994R

RELIEF VALVE

Condensate Pump P-1

PIPE SIZE ½

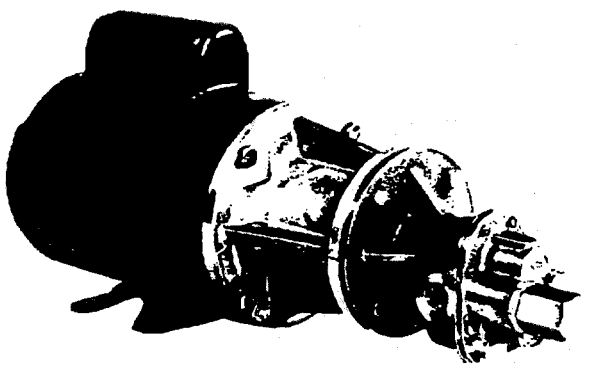

DESIGNED TO:
CLOSE COUPLE TO STANDARD NEMA C & TC FACE MOTORS WITH KEYED SHAFTS & FEET

PUMP NO.	DESCRIPTION
994,994R	Pump Only
994H,994RH	Pump, Bracket and hardware for MTG to 56C frame motor
994J,994RJ	Pump, Bracket and hardware for MTG to 145TC frame motor
994K,994RK	Pump, Bracket and hardware for MTG to 182TC frame motor
994K,994RK	Pump, Bracket and hardware for MTG to 184TC frame motor
*See below	Pump & motor close coupled

CAPACITY—GALLONS OF WATER PER MINUTE

1725 R.P.M.

PSI	GPM	HP req.	HP Motor	Motor Frame	*PUMP & MOTOR NO. Single Phase	Three Phase
0	10.5	.50	½	56C	994HJ45	994HJ95
20	10.3	.75	¾	56C	994HM26	994HM95
40	10.1	.90	1	56C	994HN26	994HN95
60	9.9	1.20	1½	145TC	994JT45	994JT95
80	9.6	1.50	1½	145TC	994JT45	994JT95
100	9.4	1.75	2	145TC	994JW45	994JW95
125	9.2	2.00	2	145TC	994JW45	994JW95
150	9.0	2.32	3	182TC	994KY45	994KY95

1150 R.P.M.

PSI	GPM	HP req.	HP Motor	Motor Frame	*PUMP & MOTOR NO. Single Phase	Three Phase
0	6.9	.24	½	56C	994HJ46	994HJ96
20	6.6	.29	½	56C	994HJ46	994HJ96
40	6.4	.43	½	56C	994HJ46	994HJ96
60	6.1	.58	¾	56C	994HM46	994HM96
80	5.9	.72	¾	56C	994HM46	994HM96
100	5.6	.93	1	145TC	994JN46	994JN96
125	5.4	1.25	1½	145TC	994JT46	994JT96
150	5.2	1.63	2	184TC	994KW46	994KW96

*To specify relief valve models, add (R) to above Pump & Motor No.'s Example 994HJ45 becomes 994RHJ45.

FEATURES

- Bronze Construction with Stainless Steel Shafts
- Positive Spring Loaded Lip Seal
- AVAILABLE WITH MOTOR ADAPTER AND HARDWARE. EASY FIELD ASSEMBLY TO MOTORS
- Self-Lubricating Carbon Bearings
- Consult Factory for Special Motors and Seals

DRIVE

The pump is driven directly from the electric motor shaft by means of a flexible coupling. An aluminum adapter connects the pump to the motor.

LIQUIDS AND TEMPERATURE

Service life will be increased substantially if liquid pumped is clean and has lubricity value. These pumps have extremely close tolerances. Fine abrasives like sand, silt or powders in suspension will destroy pumping ability.

Liquids compatible with bronze, stainless steel and the Buna lip seal can be pumped. For solvents a Viton lip seal is available. See chemical compatibility table or check factory.

Temperature extremes are detrimental to service life and should be avoided. Basic metals of construction allow temperature range of -40 to 400° F. Standard Buna lip seal has a temperature limit of 250°F, while the Viton lip seal will handle up to 300° F. Freezing liquid in the pump can deform or damage the pump.

SUCTION LIFT

A rotary gear pump is capable of lifting water on the suction side as high as 20 feet. Though gear pumps are self-priming a foot valve is recommended. If possible, wet gears with the liquid to be pumped for first dry start. Liquid retained in the system and gear chambers serves to wet pump on subsequent starts.

ROTATION AND RELIEF VALVE

The relief valve is not intended to be a metering or flow control device. Its main purpose is to function as a discharge pressure relief when ball and spring tension is exceeded by the discharge pressure. Overheating can occur within 5-10 minutes if discharge line is completely shut off for extended periods.

Unless otherwise specified the pump motor unit is supplied by the factory for shaft rotation as shown in diagram on reverse page. Reversing the motor rotation will reverse the "in" and "out" ports and also requires changing the relief valve location. The relief valve is always on the discharge side in this pump series. The factory pressure setting is 50 P.S.I., to increase pressure turn relief valve adjusting screw in clockwise direction.

To reverse single phase motors find instructions on inside of junction box cover or on name plate of motor.

Three phase motors are not wired for any particular rotation. They can be reversed by interchanging any 2 wires of the 3 wire leads.

OBERDORFER PUMP DIVISION • SYRACUSE, NEW YORK 13221 • PHONE (315) 437-0361

THE PRODUCT DESCRIBED HEREON IS COVERED BY "THE OBERDORFER LIMITED WARRANTY OF JANUARY 1977"
COPIES AVAILABLE FROM FACTORY OR STOCKING DISTRIBUTOR

MODEL 994 994R

RELIEF VALVE

OBERDORFER

CLOSE COUPLED BRONZE ROTARY GEAR PUMP

EXPLODED VIEW & PARTS LIST

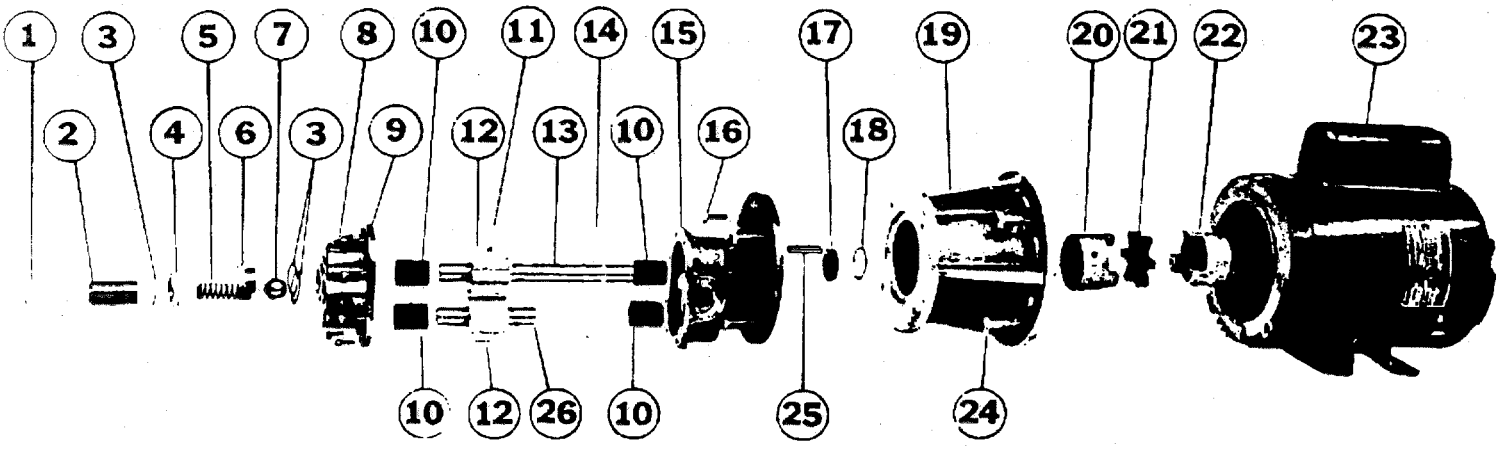

REPAIR KIT NO. INCLUDES SHADED PARTS	PUMP NO.	1 VALVE NUT	2 ADJ SCREW	3 FIBER WASHER	4 LOCKNUT	5 SPRING	6 PLUG NUT	7 BALL	8 SCREW	9 COVER	10 BEARING	11* PIN	12* GEAR	13* DRIVE SHAFT	14 GASKET	15 BODY	16** SCREW	17 SEAL	18 RETAINING RING	19** ADAPTER	20** COUPLING HALF
		1 Req'd	1 Req'd	3 Req'd	1 Req'd	1 Req'd	1 Req'd	1 Req'd	8 Req'd	1 Req'd	4 Req'd	1 Req'd	2 Req'd	1 Req'd	1 Req'd	1 Req'd	4 Req'd	1 Req'd	1 Req'd	1 Req'd	1 Req'd
11333	994HJ45	–	–	–	–	–	–	–	A5385	C5900	A5091	A5473	A5028	A8452	A5227	C8401	A6474	A5463	A5476	C8408	B8438
11333	994RHJ45	A5204	A5200	A6964	A5209	A5207	A5205	A5206	A5385	C5902	A5091	A5473	A5028	A8452	A5227	C8401	A6474	A5463	A5476	C8408	B8438
11333	994HJ95	–	–	–	–	–	–	–	A5385	C5900	A5091	A5473	A5028	A8452	A5227	C8401	A6474	A5463	A5476	C8408	B8438
11333	994RHJ95	A5204	A5200	A6964	A5209	A5207	A5205	A5206	A5385	C5902	A5091	A5473	A5028	A8452	A5227	C8401	A6474	A5463	A5476	C8408	B8438
11333	994HM26	–	–	–	–	–	–	–	A5385	C5900	A5091	A5473	A5028	A8452	A5227	C8401	A6474	A5463	A5476	C8408	B8438
11333	994RHM26	A5204	A5200	A6964	A5209	A5207	A5205	A5206	A5385	C5902	A5091	A5473	A5028	A8452	A5227	C8401	A6474	A5463	A5476	C8408	B8438
11333	994HM95	–	–	–	–	–	–	–	A5385	C5900	A5091	A5473	A5028	A8452	A5227	C8401	A6474	A5463	A5476	C8408	B8438
11333	994RHM95	A5204	A5200	A6964	A5209	A5207	A5205	A5206	A5385	C5902	A5091	A5473	A5028	A8452	A5227	C8401	A6474	A5463	A5476	C8408	B8438
11333	994HN26	–	–	–	–	–	–	–	A5385	C5900	A5091	A5473	A5028	A8452	A5227	C8401	A6474	A5463	A5476	C8408	B8438
11333	994RHN26	A5204	A5200	A6964	A5209	A5207	A5205	A5206	A5385	C5902	A5091	A5473	A5028	A8452	A5227	C8401	A6474	A5463	A5476	C8408	B8438
11333	994HN95	–	–	–	–	–	–	–	A5385	C5900	A5091	A5473	A5028	A8452	A5227	C8401	A6474	A5463	A5476	C8408	B8438
11333	994RHN95	A5204	A5200	A6964	A5209	A5207	A5205	A5206	A5385	C5902	A5091	A5473	A5028	A8452	A5227	C8401	A6474	A5463	A5476	C8408	B8438
11333	994JT45	–	–	–	–	–	–	–	A5385	C5900	A5091	A5473	A5028	A8452	A5227	C8401	A6474	A5463	A5476	C8408	B8438
11333	994RJT45	A5204	A5200	A6964	A5209	A5207	A5205	A5206	A5385	C5902	A5091	A5473	A5028	A8452	A5227	C8401	A6474	A5463	A5476	C8408	B8438
11333	994JT95	–	–	–	–	–	–	–	A5385	C5900	A5091	A5473	A5028	A8452	A5227	C8401	A6474	A5463	A5476	C8408	B8438
11333	994RJT95	A5204	A5200	A6964	A5209	A5207	A5205	A5206	A5385	C5902	A5091	A5473	A5028	A8452	A5227	C8401	A6474	A5463	A5476	C8408	B8438
11333	994JW45	–	–	–	–	–	–	–	A5385	C5900	A5091	A5473	A5028	A8452	A5227	C8401	A6474	A5463	A5476	C8408	B8438
11333	994RJW45	A5204	A5200	A6964	A5209	A5207	A5205	A5206	A5385	C5902	A5091	A5473	A5028	A8452	A5227	C8401	A6474	A5463	A5476	C8408	B8438
11333	994JW95	–	–	–	–	–	–	–	A5385	C5900	A5091	A5473	A5028	A8452	A5227	C8401	A6474	A5463	A5476	C8408	B8438
11333	994RJW95	A5204	A5200	A6964	A5209	A5207	A5205	A5206	A5385	C5902	A5091	A5473	A5028	A8452	A5227	C8401	A6474	A5463	A5476	C8408	B8438
11333	994KY45	–	–	–	–	–	–	–	A5385	C5900	A5091	A5473	A5028	A8452	A5227	C8401	A6474	A5463	A5476	C8499	B8509
11333	994RKY45	A5204	A5200	A6964	A5209	A5207	A5205	A5206	A5385	C5902	A5091	A5473	A5028	A8452	A5227	C8401	A6474	A5463	A5476	C8499	B8509
11333	994KY95	–	–	–	–	–	–	–	A5385	C5900	A5091	A5473	A5028	A8452	A5227	C8401	A6474	A5463	A5476	C8499	B8509
11333	994RKY95	A5204	A5200	A6964	A5209	A5207	A5205	A5206	A5385	C5902	A5091	A5473	A5028	A8452	A5227	C8401	A6474	A5463	A5476	C8499	B8509

REPAIR KIT NO. INCLUDES SHADED PARTS	PUMP NO.	21** RUBBER INSERT	22** COUPLING HALF	23 MOTOR	24** SCREW	25** KEY	26* IDLE SHAFT
		1 Req'd	1 Req'd	1 Req'd	4 Req'd	1 Req'd	1 Req'd
11333	994HJ45	A7884	B8438	A8460	A5411	A6845	A5493
11333	994RHJ45	A7884	B8438	A8460	A5411	A6845	A5493
11333	994HJ95	A7884	B8438	A8497	A5411	A6845	A5493
11333	994RHJ95	A7884	B8438	A8497	A5411	A6845	A5493
11333	994HM26	A7884	B8438	A7048	A5411	A6845	A5493
11333	994RHM26	A7884	B8438	A7048	A5411	A6845	A5493
11333	994HM95	A7884	B8438	A8469	A5411	A6845	A5493
11333	994RHM95	A7884	B8438	A8469	A5411	A6845	A5493
11333	994HN26	A7884	B8438	A7055	A5411	A6845	A5493
11333	994RHN26	A7884	B8438	A7055	A5411	A6845	A5493
11333	994HN95	A7884	B8438	A8476	A5411	A6845	A5493
11333	994RHN95	A7884	B8438	A8476	A5411	A6845	A5493
11333	994JT45	A7884	B8439	A8482	A5411	A6845	A5493
11333	994RJT45	A7884	B8439	A8482	A5411	A6845	A5493
11333	994JT95	A7884	B8439	A8484	A5411	A6845	A5493
11333	994RJT95	A7884	B8439	A8484	A5411	A6845	A5493
11333	994JW45	A7884	B8439	A8524	A5411	A6845	A5493
11333	994RJW45	A7884	B8439	A8524	A5411	A6845	A5493
11333	994JW95	A7884	B8439	A8489	A5411	A6845	A5493
11333	994RJW95	A7884	B8439	A8489	A5411	A6845	A5493
11333	994KY45	A8201	B8440	A8525	A8505	A6845	A5493
11333	994RKY45	A8201	B8440	A8525	A8505	A6845	A5493
11333	994KY95	A8201	B8440	A8493	A8505	A6845	A5493
11333	994RKY95	A8201	B8440	A8493	A8505	A6845	A5493

*AVAILABLE FROM FACTORY AS ASSEMBLIES ORDER BY ASSEMBLY NO'S. AS FOLLOWS.

NO. 32532 DRIVE GEAR & SHAFT ASSEMBLY (INCLUDES ITEMS 11, 12 & 13)

NO. 32113 IDLE GEAR AND SHAFT ASSEMBLY (INCLUDES ITEMS 12 & 26)

**MOTOR MOUNTING ADAPTER AND HARDWARE KIT AVAILABLE FROM FACTORY AS FOLLOWS: (INCLUDES ITEMS 16, 19, 20, 21, 22, 24 & 25)

PUMP NO	MOTOR ADAPTER K.T NO
994H 994RH	11299
994J 994RJ	11300
994K 994RK	11301

ROTATION & RELIEF VALVE LOCATION

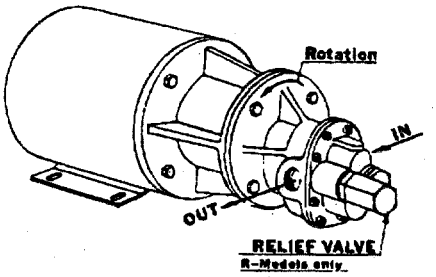

DIMENSIONS

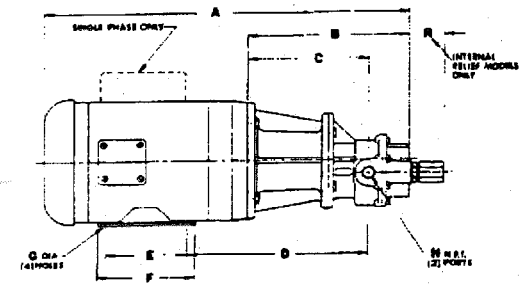

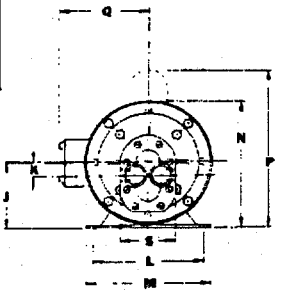

PUMP NO.	MOTOR FRAME	A	B	C	D	E	F	G	H	J	K	L	M	N	P	Q	R	S
994H	56C	17.62	8.62	6.50	9.06	3.00	4.50	.34	1/2	3.50	.750	4.87	6.5	6.87	9.12	5.25	1.93	2.75
994J	145TC	17.62	8.62	6.50	9.37	5.00	5.94	.34	1/2	3.50	.750	5.50	6.6	6.87	9.12	5.25	1.93	2.75
994K	182TC	19.93	10.93	7.31	10.81	4.5	6.50	.41	1/2	4.50	.750	7.50	8.62	8.43	10.68	5.87	1.93	2.75
994K	184TC	19.93	10.93	7.31	10.81	5.5	6.50	.41	1/2	4.50	.750	7.50	8.62	8.43	10.68	5.87	1.93	2.75