N60200.AR.003320
NAS CECIL FIELD, FL
5090.3a

OPERATIONS AND MAINTENANCE MANUAL FOR AIR SPARGE AND SOIL VAPOR EXTRACTION SYSTEM AT 103RD STREET AND A AVENUE JET FUEL TRANSFER PIPELINE NAS CECIL FIELD FL

5/1/2002

CH2MHILL CONSTRUCTORS INC

Operations & Maintenance Manual

Air Sparge and Soil Vapor Extraction System
103rd Street and A Avenue
Jet Fuel Transfer Pipeline

Contract No. N62467-98-D-0995
Contract Task Order No. 0029

Former Naval Air Station Cecil Field
Jacksonville, Florida

Submitted to:

U.S. Naval Facilities
Engineering Command
Southern Division

Prepared by:

CH2MHILL
Constructors, Inc.

115 Perimeter Center Place, N.E.

Suite 700

Atlanta, GA 30346

May 2002

Contents

Acronym List ..... **iii**
1.0 Introduction **1-1**
1.1 Objective 1-1
1.2 Site History 1-1
2.0 General Process Description **2-1**
2.1 Air Sparge System 2-1
2.2 Soil Vapor Extraction System 2-1
3.0 Air Sparge/Vapor Extraction Well Description **3-1**
3.1 Air Sparge Wells 3-1
3.2 Vapor Extraction Wells 3-1
4.0 Piping and Manifold System Description **4-1**
4.1 Air Sparge System 4-1
4.2 Soil Vapor Extraction System 4-1
5.0 Remediation System Description **5-1**
5.1 Air Sparge System 5-1
5.2 Soil Vapor Extraction System 5-1
6.0 Master Control Panel Description **6-1**
7.0 Start-Up/Shut-Down Procedure **7-1**
7.1 Air Sparge System 7-1
7.2 Air Sparge System Shut-down 7-2
8.0 Testing Procedures **8-1**
9.0 Trouble-shooting **9-1**
9.1 Red Indicator Lights 9-1
9.1.1 Low Vacuum 9-1
9.1.2 High-High Separator Level 9-1
9.1.3 High-High Storage Tank Level 9-1
9.1.4 High-Pressure 9-2
5.1.1 Blower High Temperature 9-2
9.2 Blower Will Not Start 9-2
9.3 Pump Will Not Start 9-3
9.4 Air Compressor Solenoid Valve Will Not Open 9-4
10.0 Safety **10-1**
11.0 References **11-1**

Appendices

A Figures
B Vendor Data for Air Sparge Equipment and Instrumentation
C Vendor Data for SVE Equipment and Instrumentation
D Master Control Panel Wiring and Panel Diagrams

Acronyms and Abbreviations

acfm	actual cubic feet per minute
bls	below land surface
CCI	CH2M HILL Constructors, Inc.
CTO	Contract Task Order
DOT	Department of Transportation
EPA	U.S. Environmental Protection Agency
^{o}F	degrees Fahrenheit
FAC	Florida Administrative Code
H_2O	water
Hg	mercury
ID	inside diameter
J.A. Jones	J.A. Jones Environmental Services
MW	Monitoring Well
NAS	Naval Air Station
NAVFAC	Naval Facilities Engineering Command
O&M	Operation and Maintenance
PPE	personal protective equipment
psi	pounds per square inch
PVC	polyvinyl chloride
scfm	standard cubic feet per minute
SVE	soil vapor extraction

1.0 Introduction

CH2M HILL Constructors, Inc. (CCI) with J.A. Jones Environmental Services (J.A. Jones) has been contracted by the Department of the Navy, Southern Division Naval Facilities Engineering Command (NAVFAC), to provide operation and maintenance (O&M) services at 103rd Street and A Avenue, former Naval Air Station (NAS) Cecil Field, Jacksonville, Florida, under Response Action Contract No. N62467-98-D-0995, Contract Task Order (CTO) No. 0029.

1.1 Objective

The objective of the remedial action at 103rd Street and A Avenue is to reduce the concentrations of petroleum-related contaminants in the groundwater and unsaturated soils to target levels specified by Florida Administrative Code (FAC) 62-777. Air sparging/soil vapor extraction (AS/SVE) is the technology being utilized to achieve this objective.

1.2 Site History

The 103rd Street and A Avenue Jet Fuel Transfer Pipeline site is located approximately ¼-mile east of the A Avenue gate to NAS Cecil Field. The 8-inch diameter, steel jet fuel transfer pipeline was completed in 1952 to transfer jet fuel from NAS Jacksonville to NAS Cecil Field. A small leak (1/8-inch diameter) was discovered in July 1997 in the pipeline located beneath the eastbound lane of 103rd Street. In July 1997, Bechtel Environmental, Inc. removed approximately 900 cubic yards of petroleum-contaminated soil resulting from the leak. The pipeline is currently de-fueled and inactive. The AS/SVE was constructed by CCI/J.A. Jones from March 2000 to May 2000 and start-up was performed on May 25, 2000. The system was operated and maintained by CCI/J.A. Jones under Response Action Contract No. N62467-98-D-0995, CTO No. 0029 for the first year of operation, and is currently being operated and maintained by CCI/J.A. Jones under Response Action Contract No. N62467-98-D-0995, CTO No. 0062.

2.0 General Process Description

The AS/SVE technology utilizes the injection of compressed air into the groundwater to volatilize and promote biodegradation of dissolved organic compounds. The system was installed at the 103rd and A Street site to recover the undissolved portion of the injected air.

A site map showing the locations of the AS/ wells and the remediation system is provided on Figure 1 in Appendix A. The Piping and Instrumentation Diagrams, included on Figures 2 and 3 in Appendix A, illustrate the configuration of the integrated systems.

2.1 Air Sparge System

The air sparge system consists of 20 injection wells, a rotary screw-type compressor, a receiver tank, an oil coalescing filter, a solenoid valve, a pressure regulator, a particulate filter, and associated piping and instrumentation. The air sparge system is designed for each AS well to operate at an airflow rate of 10 to 12 actual cubic feet per minute (acfm) and at a wellhead pressure of 9 pounds per square inch (psi). Based upon actual measurements recorded during air sparge system operation, normal operating parameters include:

- Wellhead flowrate = not measured
- Wellhead pressure = 10 psi
- Combined flowrate = not measured
- Combined pressure = 17 psi
- Autodrain – discharge for 5 seconds every 10 minutes

2.2 Soil Vapor Extraction System

The SVE consists of 21 vapor extraction wells, a positive displacement vacuum blower, a moisture separator equipped with a centrifugal transfer pump and storage tank, and associated piping and instrumentation. The SVE was initially equipped with two 1,000-pound granular activated carbon units (installed in series), which were removed after the first 30 days of operation based upon the concentrations of the pre-treatment air stream. The SVE is designed for each vapor extraction well to operate at an airflow rate of 17 acfm and at a vacuum pressure of 54 inches of water (in H2O). Based upon actual measurements recorded during SVE operation, normal operating parameters include:

- Wellhead flowrate = 34 acfm
- Wellhead vacuum pressure = 29 in H2O
- Combined discharge flowrate from blower = 700 acfm
- Pre-moisture separator vacuum = 40 in H2O
- Blower discharge temperature = 180 degrees Fahrenheit

- Blower Voltage – Leg 1 to Leg 2 = 240 volts; Leg 2 to Leg 3 = 240 volts; Leg 1 to Leg 3 = 240 volts
- Blower Amps @ 0" Mercury Vacuum – Leg 1 = 14.5 amps; Legs 2 = 14.5 amps; Leg 3 = 14.5 amps
- Pump Amps (running dry Hand) – Leg 1 = 3.5 amps; Leg 3 = 3.5 amps

3.0 Air Sparge/Vapor Extraction Well Description

The remediation system currently utilizes 20 air sparge injection wells that are screened from 22 to 25 feet below land surface (bls), and 21 vapor extraction wells that are screened from 5 to 7 feet bls. Each air sparge/vapor extraction well is constructed of 2-inch inside diameter (ID) Schedule 80 polyvinyl chloride (PVC) flush threaded pipe connected to 0.020-inch slot width Schedule 80 PVC well screens.

3.1 Air Sparge Wells

The boreholes for the air sparge wells were drilled to 25 feet bls using hollow stem augers. The annular space between the borehole and the well screen was filled with 20/30 silica sand pack to 2 feet above the top of the screen. The top of the filter pack was then sealed with 2 feet of bentonite, and the remainder of the borehole was filled with portland cement/bentonite powder grout.

The air sparge well vaults include a 2-inch Schedule 80 PVC air injection feeder pipe, a ½-inch Schedule 80 PVC union to allow for the dismantling of the well head assembly, a Dwyer RMC-122-BV rotometer, a pressure gauge, and quick connect air hoses and fittings. The meter valve on the rotometer can be used to regulate the flowrate and close off the well completely, if required. Flowrate and pressure measurements at the wellhead can be measured directly from the rotometer and pressure gauge, respectively. A 2-inch threaded cap on the top of the well allows access to each air sparge well for sampling or water level measurements, if required. The air sparge wellhead construction details are shown on Figure 4 in Appendix A. Vendor equipment specifications for the vault appurtenances are provided in Appendix B.

3.2 Vapor Extraction Wells

The boreholes for the vapor extraction wells were drilled to 7 feet bls using hollow stem augers. The annular space between the borehole and the well screen was filled with 20/30 silica sand pack, to 6 inches above the top of the screen. The remainder of the borehole was filled with portland cement/bentonite powder grout.

The vapor extraction well vaults include a 2-inch Schedule 80 PVC extraction feeder pipe, a 2-inch ball valve, a Dwyer DS-300 2-inch pitot tube for flow rate indication, and a vacuum gauge. The valve can be used to regulate the flowrate and close off the well completely, if required. Flowrate and vacuum measurements at the wellhead can be measured directly from the portable 0 to 1 scale Magnehelic gauge provided. A 2-inch expansion cap on the top of the well allows access to each vapor extraction well for sampling or water level measurements, if required. Vapor extraction wellhead construction details are shown on Figure 5 in Appendix A. Vendor equipment specifications for the vault appurtenances are provided in Appendix C.

4.0 Piping and Manifold System Description

4.1 Air Sparge System

The piping and manifold system between the air compressor and the air sparge wellheads is constructed of 2 inch ID Schedule 80 PVC piping (below ground), and a combination of 1½-inch galvanized piping and 1-inch rubber air hose (above ground). Three piping systems were constructed to inject air into separate zones. Zone 1 includes air sparge wells 1 through 5; Zone 2 includes air sparge wells 6 through 10; Zone 3 includes air sparge wells 11 through 15; and Zone 4 includes air sparge wells 16 through 20.

The main piping manifold in the remediation system compound is equipped with a 1-inch solenoid valve (to interface with the SVE system), a 1½-inch brass ball valve, a particulate filter, an oil removal filter, a 0-160 psi pressure gauge, and a ½-inch regulator. Details concerning piping and instrumentation for the air sparge system are provided on Figure 2 in Appendix A.

4.2 Soil Vapor Extraction System

The piping and manifold system between the vapor extraction blower and the vapor extraction wellheads is constructed of 4-inch ID Schedule 80 PVC piping (above and below ground), and 3-inch Schedule 80 PVC piping (above ground).

The main piping manifold in the remediation system compound is equipped with a low vacuum switch (to interface with the SVE system), a 3-inch brass ball valve to bleed in ambient air, an inline particulate filter, a moisture separator equipped with an automatic transfer pump, a 0 to 30 in mercury (Hg) vacuum gauge (post-moisture separator), a 4-inch pitot tube for measuring flow and a ¼-inch sample port. Details concerning piping and instrumentation for the SVE are provided on Figure 3 in Appendix A.

5.0 Remediation System Description

5.1 Air Sparge System

The air sparge unit consists of the following components:

1. One 50 horsepower, 230-volt, 3-phase, Curtis RS-50-D rotary screw air compressor
2. One 240-gallon vertical air receiver tank with integral pressure relief valve, auto drain, and pressure gauge
3. One 1½ -inch solenoid valve on the air compressor discharge
4. One Kaiser KFS-250 particulate filter
5. One Kaiser KOR-250 oil coalescing filter
6. One 1 ½-inch Speedaire pressure regulator with pressure gauge
7. Four Dwyer Model VFC-123 rotometer air flowmeters with 10 to 100 standard cubic feet per minute (scfm) ranges

Appendix B contains vendor specification sheets, operation and maintenance information, cut sheets, and performances for the air sparge system components.

5.2 Soil Vapor Extraction System

The SVE unit consists of the following components:

1. One 15 horsepower, 230-volt, 3-phase, explosion-proof Roots URAI-47 positive displacement belt-driven blower
2. One 60-gallon vertical moisture separator tank
3. One 1 horsepower, 230-volt, 3-phase Gondas centrifugal pump for pumping water from the moisture separator
4. One 4-inch inlet/outlet Stoddard inlet filter
5. One 3-inch inlet/outlet Stoddard discharge silencer
6. One 2-inch Knuckle inlet vacuum relief valve
7. One 3-inch brass ball valve with 3-inch inlet Stoddard silencer/filter for bleed air
8. One 550-gallon poly tank
9. One Dwyer Model F7-MLK high-high, high and low level switch in the moisture separator site tube to activate and deactivate, respectively, the discharge pump. The

high-high failsafe switch in the moisture separator deactivates the blower in case of high water in the moisture separator

10. One Dwyer Model F6 high-high failsafe switch in the 500-gallon storage tank to deactivates the blower in case of high water in the storage tank
11. One Dwyer Model 1950-5 low vacuum switch to close the solenoid valve on the air compressor should the blower fail and a loss of vacuum occur
12. One Dwyer Model 1950-15 high-pressure switch to close the solenoid valve on the air compressor should a high pressure condition occur on the blower discharge
13. One Mercoid Model 437SS high temperature switch to deactivate the blower in case of high temperature in the blower discharge
14. US Gauge 0-30-inches of Hg vacuum gauge on the moisture separator for inlet vacuum readings
15. One Dwyer DS-300-4-inch pitot tube on the well inlet header for direct airflow measurements
16. One ¼-inch Labcock sample port on the main 4-inch inlet header for air sampling

Appendix C contains vendor specification sheets, operation and maintenance information, cut sheets, and performances for the SVE system components.

6.0 Master Control Panel Description

The master control panel consists of a NEMA 4 rated enclosure, hinged front access door, locking hasps, an aluminum backplate, motor starters with thermal overloads for the blower and pump, main disconnect switch, manual reset button, red failsafe indicator light, green normal operation indicator lights, and a run-time hourmeter. The entire control system is based on relay-controlled logic for the wiring diagram of the panel.

The control panel logic and design are summarized below:

- SVE Control Panel and Controls
- NEMA 4 panel box
- Main Disconnect On/Off switch
- HOA Switch for blower
- HOA Switch for Transfer Pump
- Motor Starters-Contractor, Thermal Overload w/adjustable amp setting
- Green Normal Running Lights for blower and pump
- Red Light – High-High Moisture Separator Level (Interlock requiring manual reset)
- Red Light – High Water Storage Tank (Interlock requiring manual reset)
- Red Light – High Temperature (Interlock requiring manual reset)
- Red Light – Low Vacuum (Interlock requiring manual reset) (Pressure switch to interlock with air sparge system solenoid valve. A tube connected from the vacuum side of the SVE blower to the low pressure port on the Dwyer pressure switch. Should the Dwyer pressure switch sense a loss of vacuum at the SVE system, a solenoid valve shall close and prohibit air flow to the sparge wells from the compressor.)
- Red Light – High Pressure (Interlock requiring manual reset) (Pressure switch to interlock with air sparge system solenoid valve. A tube connected from the pressure side of the SVE blower to the high pressure port on the Dwyer pressure SVE system discharge, a solenoid valve shall close and prohibit air flow to the sparge wells from the compressor.)
- Relay logic, 120 Volt switching

With HOA switches to Hand, the blower and/or discharge pump will run and over-ride all controls. Switches are NOT spring loaded. With HOA switches to Automatic, blower and pump will run according to controls. Switches are NOT spring loaded. Four interlocking shutdowns requiring manual restarts are included:

- High temperature – A manually set point on a temperature switch with the sensor located in-line on the SVE blower discharge will deactivate the SVE blower system, illuminate the red High Temperature light, and require a manual reset to restart.
- High Moisture Separator – When the water reaches the high-high level switch in the moisture separator, the SVE blower will deactivate, the red High moisture Separator Tank light will illuminate, and a manual reset will be required to restart the SVE system.
- High Storage Tank – When the water reaches the high level switch in the poly gallon storage tank the SVE blower will deactivate, the red High Storage Tank light will illuminate, and a manual reset will be required to restart the SVE system.
- High Pressure – When the discharge pressure exceeds 15 psi, the SVE blower will deactivate, the red High Pressure light will illuminate, and a manual reset will be required to restart the SVE system.

Note that any one of the four failsafe conditions listed above will also trigger a Low Vacuum condition that in turn, closes the air sparge solenoid valve.

One automatic shutdown and restart is included. A high level in the moisture separator will activate the discharge pump and illuminate the green pump running lamp on the front of the panel. Likewise, a low level in the moisture separator will deactivate the discharge pump and turn off the green Pump running lamp on the front of the panel.

The air compressor has its own starter box and controls. The sparge system is interlocked to the SVE system via the low vacuum switch and solenoid valve. Should the SVE blower fail or deactivate for any reason, a pressure switch shall close a solenoid valve from the compressor tank to the sparge wells. The solenoid shall open when the condition is corrected.

Appendix D contains the wiring and panel diagrams for the master control panel.

7.0 Start-Up/Shut-Down Procedure

The following steps should be followed when starting the system.

1. Verify proper oil and grease in SVE blower per manufacture recommendations.
2. Turn on the main disconnect switch adjacent to the electrical meter.
3. Turn on the breakers in the main breaker box.
4. Turn the control panel disconnect switch to on.
5. Open the SVE bleed valve 100 percent.
6. Verify that the moisture separator drain valve is closed.
7. Verify that that all SVE wells planned to operate are open 100-percent.
8. Verify that all SVE well caps are sealed closed.
9. Switch the pump switch to AUTO. Pump should not start.
10. Switch the blower switch to AUTO. Blower should start.
11. Check amp draw on blower. Unloaded amp readings across all three legs should be 15 amps or less.
12. Close the bleed air valve slowly to the desired extraction vacuum on the moisture separator gauge.
13. Verify vacuum and flow at all desired extraction wells.

7.1 Air Sparge System

1. Verify correct oil level start-up in compressor separator
2. Turn main compressor breaker to ON.
3. Drain any residual air in the compressor separator to 0 psi using the relief valve.
4. Switch to UNLOAD.
5. Switch to CONST.
6. Close the moisture separator valve.
7. Close the 1½ -inch brass ball valve on the receiver tank discharge.
8. Open the 1½ -inch brass ball valve just past the moisture separator prior to the receiver tank.
9. Close the main regulator valve.

10. Turn the air compressor on according to the procedures in the Curtis manual. Press the stop button to reset the high temperature red light. Press the start button. Verify rotation. DO NOT OPERATE IN WRONG ROTATION.

11. Let run 5 to 15 minutes in the UNLOAD position. Separator pressure should reach approximately 40 psi; temperature should reach approximately 165ºF.

12. Switch to LOAD. Tank pressure should climb to 100 psi and then go into idle. Check for air leaks with soapy water.

13. Slowly open 1½-inch ball valve on receiver tank discharge.

14. Slowly increase injection pressure to design value on 1 ½-inch regulator.

15. Start opening the control valves at each sparge well to the desired injection flowrate and pressure.

16. Check amps draws on all operating motors to ensure that they match motor requirements.

7.2 Air Sparge System Shut-down

The following steps should be followed when shutting the system down:

1. Close the 1½-inch ball valve on the air compressor discharge.
2. Open the SVE bleed air valve.
3. Turn all switches to the "Off" position on the main control panel.
4. Turn the control panel disconnect switch to "Off".
5. Turn off the breakers in the main breaker box.
6. Turn off the main disconnect switch adjacent to the electrical meter.

8.0 Testing Procedures

The system operates automatically and is controlled by seven different control mechanisms:

- High-high moisture separator level switch (failsafe)
- High-high storage tank level switch (failsafe)
- High SVE discharge temperature (failsafe)
- High SVE discharge pressure (failsafe)
- Low vacuum switch (failsafe to integrate SVE system with air sparge system)
- High moisture separator level switch (normal control)
- Low moisture separator level switch (normal control)

The high-high moisture separator switch can be tested by filling the tank with water to the switch level, removing the switch and manually putting the switch in the high position, or jumping the terminals 6 and 13 on the control terminal board inside the panel. The blower should deactivate and the red "High Level" light should illuminate. The system will require a manual reset to restart.

The high-high storage tank level switch can be tested by filling the poly tank with water to the switch position, manually triggering the switch to the high position, or jumping terminals 7 and 14 on the control panel terminal board inside the panel. The blower should deactivate and the red "High Storage Tank Level" light should illuminate. The system will require a manual to reset to restart.

The high temperature switch can be tested by manually setting the set point to the actual temperature, or jumping terminals 4 and 11 on the control panel terminal board inside the panel. The blower should deactivate and the red "High Temperature" light should illuminate. The system will require a manual reset to restart.

Dead heading the blower discharge or jumping terminals 5 and 12 on the control panel terminal board inside the panel can test the high-pressure switch. The blower should deactivate and the red "High Pressure" light should illuminate. The system will require a manual reset to restart.

The low vacuum switch can be tested, by temporarily disconnecting, and removing the ¼-inch tubing, either at the switch or at the blower intake or jumping the terminals 3 and 10 on the control terminal board inside the panel. The solenoid valve on the compressor should close and the red "Low Vacuum" light should illuminate. The system will require a manual reset to restart.

The high and low level switches can be tested, by manually removing the two-float rod from the site tube, and manually moving the switches. Move the low switch to the up position and hold. Next, move the high switch to the up position. The discharge pump should activate. Move the high switch to the down position. The pump should continue to run. Finally, move the low switch to the low position. The pump should deactivate. This procedure simulates a normal cycle of the tank filling up and being pumped out. This can also be tested, by jumping terminals 1 and 8 (to close the high switch) and 2 and 9 (to close the low switch).

9.0 Trouble-shooting

9.1 Red Indicator Lights

The front of the control panel has five red indicator lights, which are explained below.

9.1.1 Low Vacuum

The following can cause low vacuum conditions:

1. Clogged inlet filter – Manually inspect the condition of the filter element. Replace element as needed.
2. Blockage in inlet line to blower – If the filter is clean and/or new, inspect piping for a blockage.
3. Faulty vacuum switch – Trouble-shoot the vacuum switch as described in the above section. Contact Dwyer instruments for a new switch if switch fails.
4. Blower failure – Verify that the blower if operating correctly. Be sure that the blower rotation is correct.

9.1.2 High-High Separator Level

A high-high level separator level can be caused by accumulated water in the separator. The separator has a manual drain valve on the bottom of the tank. The water can be drained on the ground (if clean) or into drums for offsite disposal (if contaminated). It is the responsibility of the user to verify the contents of the water.

The following can cause high-high separator levels:

1. Faulty switch – Trouble-shoot the switch as described in the above section. Contact Dwyer instruments for a new switch if switch fails.
2. Discharge pump failure – Verify that the pump is functioning properly. Check the pump rotation. Verify that the pump activates when the high switch is triggered and deactivates when the low switch is released.

9.1.3 High-High Storage Tank Level

A high-high tank level is not a fault condition (i.e., is not caused by a system malfunction). The system is designed to pump water from the moisture separator to the 500-gallon storage tank. A high-high level switch in the tank will deactivate the blower, which in turn, will cause a low vacuum condition, which in turn, closes the sparge solenoid. To correct the condition, the 500-gallon tank must be emptied by a vacuum truck or tanker service.

9.1.4 High-Pressure

The following can cause a high-pressure condition:

1. Clogged discharge hoses – Disconnect the hoses from the blower discharge to the carbon cells.
2. Faulty switch – Trouble-shoot the switch as described in the previous section.

9.1.5 Blower High Temperature

A high temperature switch is located on the blower discharge. The switch has a manual set point. If the temperature of the blower exhaust reaches the set point, the blower will deactivate and the high temperature red lamp will illuminate.

High temperatures can be caused by the following:

1. High Vacuum – A direct relationship exists between blower inlet vacuum and temperature. At higher inlet vacuums, the blower is working harder and producing more frictional heat. High vacuums can be caused by blockages in the influent SVE inlet line such as closed valves at all the SVE wells, debris clogging the blower inlet, or a clogged inlet filter.
2. High Pressure – A direct relationship exists between blower discharge pressure and temperature. At higher discharge pressures, the blower is working harder and producing more frictional heat. High pressures can be caused by blockages in the discharge SVE line such as clogged carbon cells or debris in the discharge line.
3. Electrical Problems – The blower discharge may be heated by electrical heat caused by voltage problems, loss of phase problems, or high amp problems. The heat buildup in the motor can cause higher temperatures in the blower discharge. However, most likely, the blower overload protection inside the control panel will trip before the high temperature fault actuates.
4. Faulty switch – Verify that the switch is working properly by checking continuity across the switch connections.

It is important to understand the above five fault conditions in order to trouble shoot a non-operating system. A number of operational malfunctions, with recommended trouble shooting practices are summarized below:

9.2 Blower Will Not Start

If the blower will not start in the Auto mode, attempt the following:

1. Verify the correct voltage to the control panel. The voltage should be approximately 230 volts between any two of the three hot lines connected to the main disconnect switch inside the panel. If no voltage, check the breaker box for a tripped breaker or loss of power from the service.

2. Check that the phase is correct. The system should be three phase. Verify that voltage 230 volts across any combination of two of the three hot leads connected to the main disconnect switch inside the panel.
3. Check the three hot leads from the motor starter to the blower motor. Tighten the connector screws if required.
4. Press the reset button on the blower motor starter to reset, if the thermal overload is tripped.
5. Attempt to start the blower in Hand operation. If the blower runs, it is most likely a problem with the controls that govern automatic operation. Troubleshoot all failsafe controls.
6. Verify that a higher separator fault condition is not activated. Check the level of water in the separator site tube to verify that the level is below the high-high switch position.
7. Verify that a high storage tank fault condition is not activated. Check the level of water in the 500-gallon storage tank to verify that the level is below the high-high switch level.
8. Verify that a low vacuum fault condition is reset. This can be accomplished by running the blower in hand or pressing the reset button.
9. Verify that the wire protection fuses inside the panel are good. Each hot lead entering each starter is fused protected with an individual fuse. Remove all three fuses above the blower starter and verify continuity across both ends.
10. Verify that a short is not present. Check for continuity between each hot lead and the ground. If continuity is present, a short may be present.
11. Verify that the blower motor is not frozen. Manually rotate the motor and blower to insure that it spins freely.
12. Verify that the blower is not burned. Smell for signs of burned rubber or motor windings. Verify continuity between any two of three leads of the motor.
13. Refer to Roots for additional troubleshooting and/or repairs.

9.3 Pump Will Not Start

If the pump will not start in the Auto mode with the low and high level switches in the up position (i.e., full moisture separator tank), attempt the following:

1. Verify the correct voltage to the control panel. The voltage should be approximately 230 volts between any two of the three hot lines connected to the main disconnect switch inside the panel. If no voltage, check the breaker box for a tripped breaker or loss of power from the service.
2. Check that the phase is correct. The system should be three phase. Verify that voltage is 230 volts across any combination of two of the three hot leads connected to the main disconnect switch inside the panel.

3. Check the three hot leads from the motor starter to the pump motor. Tighten the connector screws if required.
4. Press the reset button on the pump motor starter to reset, if the thermal overload is tripped.
5. Attempt to start the blower in Hand operation. If the pump runs, it is most likely a problem with the controls that govern automatic operation. Trouble all four failsafe controls.
6. Verify that a high separator fault condition is not activated. Check the level of water in the separator site tube to verify that the level is below the high-high switch position.
7. Verify that a high storage tank fault condition is not activated. Check the level of water in the 500-gallon storage tank to verify that the level is below the high-high switch position.
8. Verify that a low vacuum fault condition is reset. This can be accomplished by running the blower in hand or pressing the reset button.
9. Verify that the wire protection fuses inside the panel are good. Each hot lead entering each starter is fused protected with an individual fuse. Remove all three fuses above the pump starter is fused protected with an individual fuse. Remove all three fuses above the pump starter and verify continuity across both ends.
10. Verify that a short is not present. Check for continuity between each hot lead and the ground. If continuity is present, a short may be present.
11. Verify that the pump motor is not frozen. Manual rotate the motor to insure that it spins freely.
12. Verify that the pump is not burned. Smell for signs of burned rubber or motor windings. Verify continuity between any two of three leads of the motor.
13. Take the pump to a motor and pump shop for service.

9.4 Air Compressor Solenoid Valve Will Not Open

1. Press the reset button on the control panel.
2. Verify that the blower is running to prevent a low vacuum condition.
3. Verify that a failsafe condition is not present (i.e., high moisture separator, high storage tank, high temperature) that deactivates that blower which in turns causes a low vacuum condition.
4. Verify voltage to the solenoid valve is 120 volts.
5. Dismantle and clean the solenoid valve.
6. Test the solenoid valve by connecting the two leads directly to a 120-volt source.

10.0 Safety

The following safety guidelines will be followed during O&M of the AS/SVE system:

- Follow lockout/tagout procedures when working inside the control panel. Line voltage is 230 volts, 3-phase that can cause serious injury and/or death. Control voltage is 120 volts, 1-phase that can cause serious injury and/or death. All wire connections should be considered live until verified with a working volt meter. Troubleshooting and repairing electrical components should be performed by a competent person or licensing electrician. Check with the site healthy and safety specialist before working on electrical.
- Avoid rapid depressurization of sparge lines. The air compressor produces pressures in excess of 100 psi that can cause serious injury and/or death. Depressurize all lines before dismantling any sparge line of component (i.e., valves, regulators, rotometers, etc.)
- Avoid lifting injuries when opening well vaults. Vault lids should be opened by two person crews.
- Avoid traffic when working in vaults. Obtain proper Department of Transportation (DOT) permits and set up proper traffic control measures prior to working in the right of ways.
- Avoid contact with vapors and/or liquids recovered from the remediation system.
- Avoid contact with moving parts such as pulleys, belts, motors, pumps, and blowers. Avoid loose clothing and hair with moving parts.
- Wear proper personal protective equipment (PPE) including, but not limited to, safety glasses, steel toe boots, hearing protection, and hard hats.
- Obtain requisite hot work permit before any welding, torch cutting, or electrical work involving sparks or arcing electric.
- Refer to the site specific health and safety plan and/or contact the designated site safety officer for more information. This manual does not constitute a site specific health and safety plan.

Note: this system procedures high voltage, high amperage, and high pressure, all of which can cause serious injury and/or death. Only competent persons should be allowed to enter the equipment compound and/or well vaults.

11.0 References

Tetra Tech NUS, Inc. 1999. Remedial Action Plan, 103rd Street and A Avenue Jet Fuel Transfer Pipeline, Naval Air Station Cecil Field, Jacksonville, Florida, August.

CH2M HILL Constructors, Inc. 2000. Work Plan Addendum No. 01, 103rd Street and A Avenue Jet Fuel Transfer Pipeline Air Sparge and Soil Vapor Extraction System Installation, Naval Air Station Cecil Field, Jacksonville, Florida, February.

Appendix A

Figures

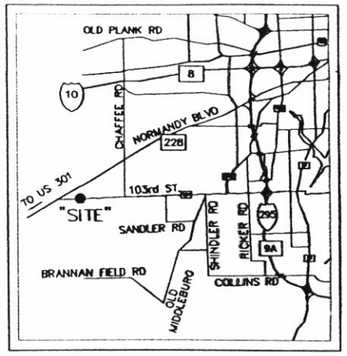

VICINITY MAP
NOT TO SCALE

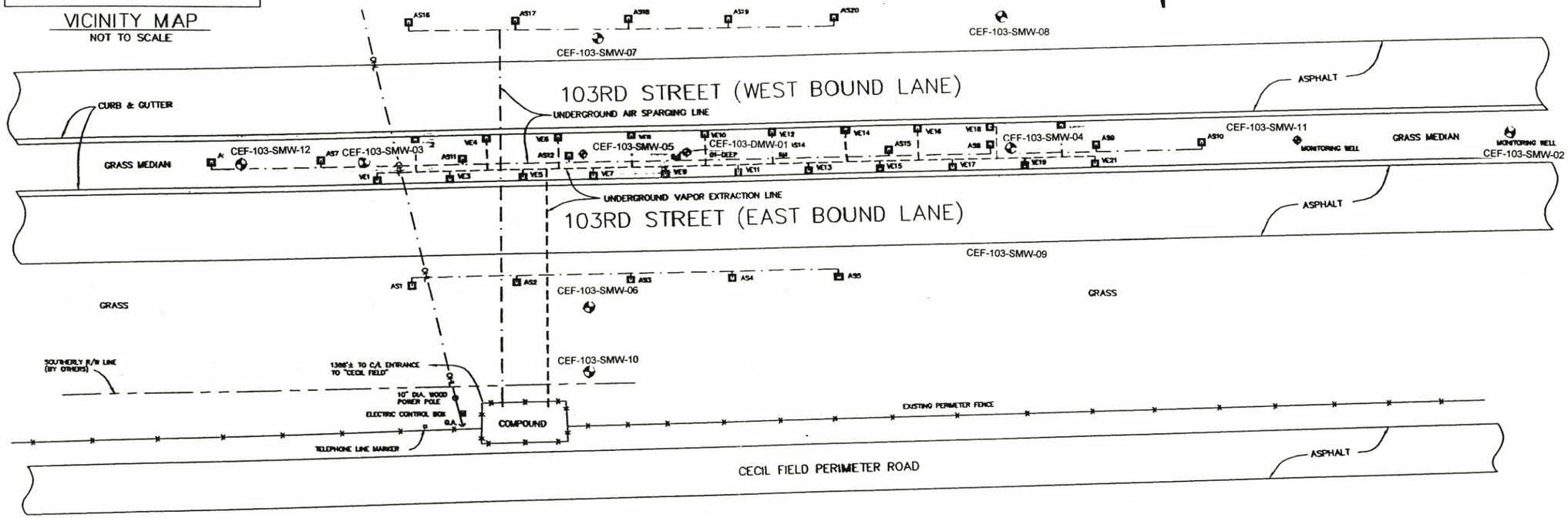

NOTES

1.) THE SPECIFIC PURPOSE OF THIS SURVEY IS TO GRAPHICALLY ILLUSTRATE THE LOCATION OF EXISTING WELLS AND IMPROVEMENTS ON SUBJECT SITE.

2.) THIS SURVEY IS NOT VALID WITHOUT THE SIGNATURE AND THE ORIGINAL RAISED SEAL OF A FLORIDA LICENSED SURVEYOR AND MAPPER.

3.) NORTH ARROW SHOWN HEREON IS BASED ON COORDINATES FURNISHED BY THE CLIENT.

4.) UNDERGROUND LINES SHOWN HEREON ARE AS PER CONTRACTOR AND WERE NOT VERIFIED BY THIS FIRM.

5.) REMEDIATION STRUCTURES NOTED AS FIELD MARKED BY OTHERS.

6.) THIS MAP IS NOT TO BE CONSTRUED AS A BOUNDARY SURVEY.

7.) THIS MAP DOES NOT DETERMINE OR REFLECT OWNERSHIP OF LOCATIONS.

LEGEND

AIR SPARGING WELL □ASP 36" X 36" CONCRETE WITH A 24" X 24" METAL COVER

UNDERGROUND AIR SPARGING LINE —— · —— —— · —— ——

VAPOR EXTRACTION WELL □VE21 36" X 36" CONCRETE WITH A 24" X 24" METAL COVER

UNDERGROUND VAPOR EXTRACTION LINE — — — — — — — — —

FENCE —x——x—

OVERHEAD LINE — · ——OHL—— · —

G.A. = GUY ANCHOR

Figure 1
Air Sparging/SVE Groundwater Monitoring Well Location Map
103rd Street and A Avenue
Jet Fuel Transfer Pipeline
NAS Cecil Field
Jacksonville, Florida

CH2MHILL

A042001005ATL\Cecil Field 101.fh8

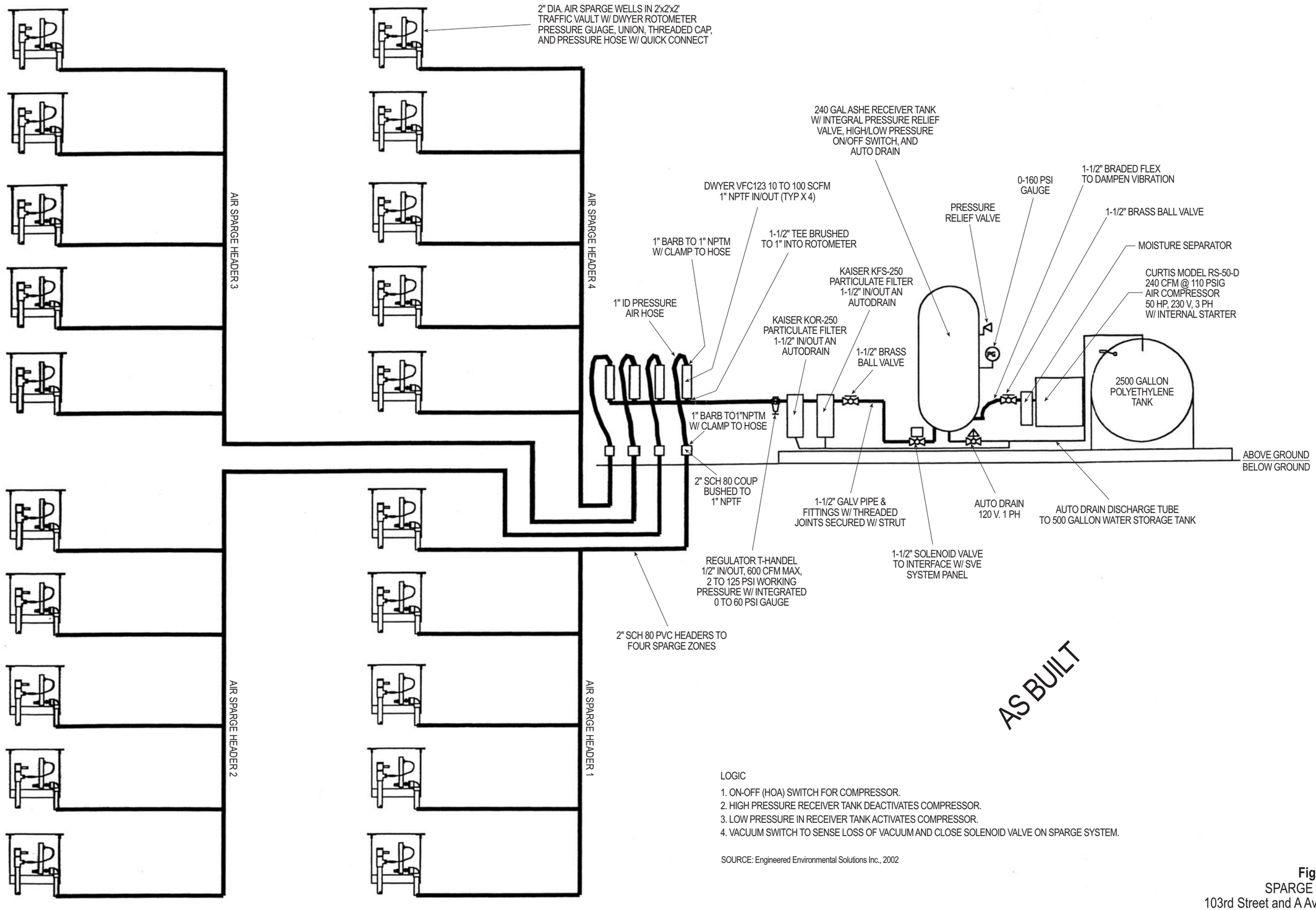

LOGIC

1. ON-OFF (HOA) SWITCH FOR COMPRESSOR.
2. HIGH PRESSURE RECEIVER TANK DEACTIVATES COMPRESSOR.
3. LOW PRESSURE IN RECEIVER TANK ACTIVATES COMPRESSOR.
4. VACUUM SWITCH TO SENSE LOSS OF VACUUM AND CLOSE SOLENOID VALVE ON SPARGE SYSTEM.

SOURCE: Engineered Environmental Solutions Inc., 2002

Figure 2
SPARGE P&ID
103rd Street and A Avenue
Jet Fuel Transfer Pipeline
NAS Cecil Field
Jacksonville, Florida

CH2MHILL

A052002001ATL \Cecil Field 100.fh8

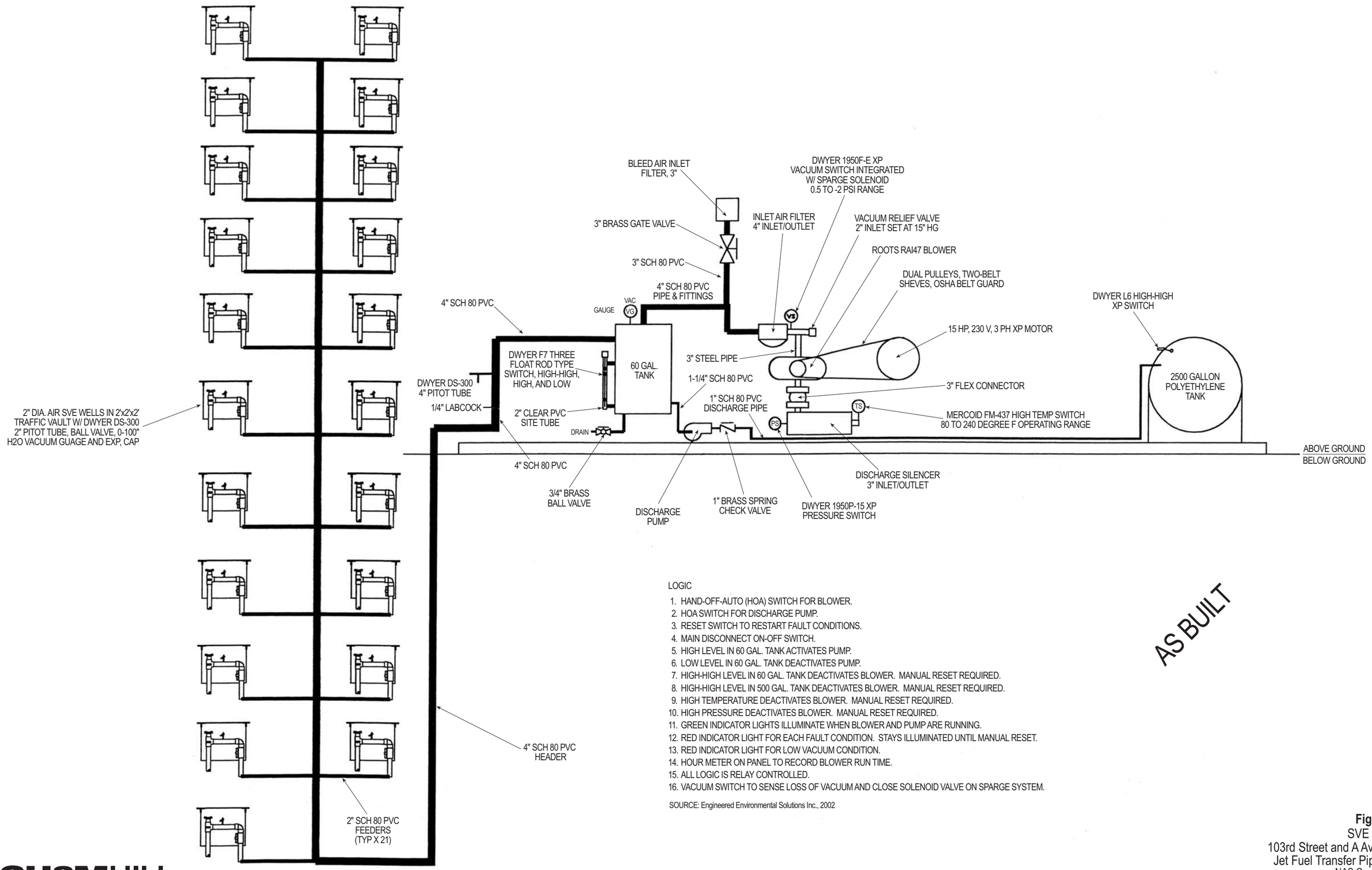

LOGIC

1. HAND-OFF-AUTO (HOA) SWITCH FOR BLOWER.
2. HOA SWITCH FOR DISCHARGE PUMP.
3. RESET SWITCH TO RESTART FAULT CONDITIONS.
4. MAIN DISCONNECT ON-OFF SWITCH.
5. HIGH LEVEL IN 60 GAL. TANK ACTIVATES PUMP.
6. LOW LEVEL IN 60 GAL. TANK DEACTIVATES PUMP.
7. HIGH-HIGH LEVEL IN 60 GAL. TANK DEACTIVATES BLOWER. MANUAL RESET REQUIRED.
8. HIGH-HIGH LEVEL IN 500 GAL. TANK DEACTIVATES BLOWER. MANUAL RESET REQUIRED.
9. HIGH TEMPERATURE DEACTIVATES BLOWER. MANUAL RESET REQUIRED.
10. HIGH PRESSURE DEACTIVATES BLOWER. MANUAL RESET REQUIRED.
11. GREEN INDICATOR LIGHTS ILLUMINATE WHEN BLOWER AND PUMP ARE RUNNING.
12. RED INDICATOR LIGHT FOR EACH FAULT CONDITION. STAYS ILLUMINATED UNTIL MANUAL RESET.
13. RED INDICATOR LIGHT FOR LOW VACUUM CONDITION.
14. HOUR METER ON PANEL TO RECORD BLOWER RUN TIME.
15. ALL LOGIC IS RELAY CONTROLLED.
16. VACUUM SWITCH TO SENSE LOSS OF VACUUM AND CLOSE SOLENOID VALVE ON SPARGE SYSTEM.

SOURCE: Engineered Environmental Solutions Inc., 2002

AS BUILT

Figure 3
SVE P&ID
103rd Street and A Avenue
Jet Fuel Transfer Pipeline
NAS Cecil Field
Jacksonville, Florida

CH2MHILL

A052002001ATL \Cecil Field 101.fh8

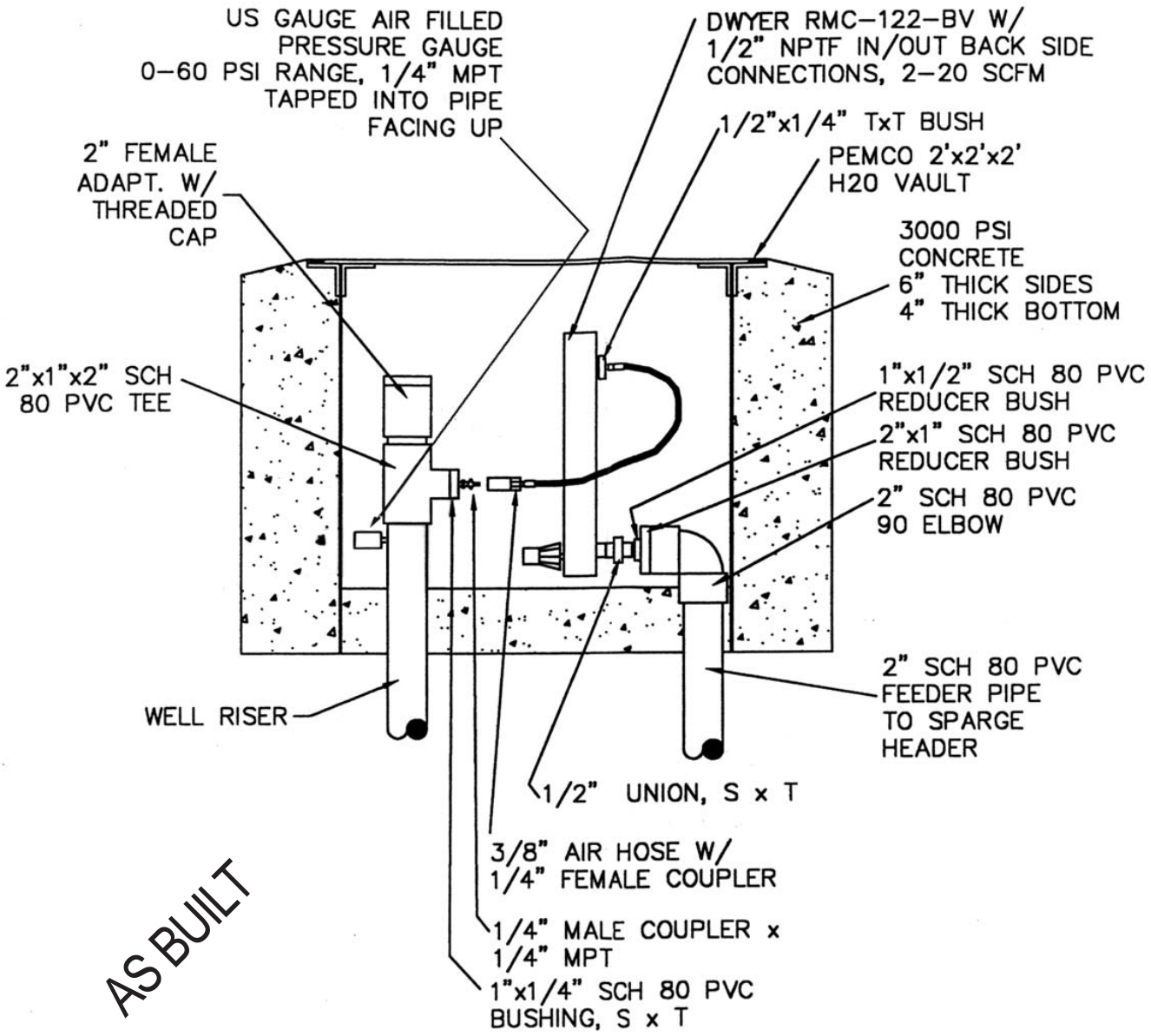

SOURCE: Engineered Environmental Solutions Inc., 2002

Figure 4
SPARGE Well Detail
103rd Street and A Avenue
Jet Fuel Transfer Pipeline
NAS Cecil Field
Jacksonville, Florida

CH2MHILL

A052002001ATL \Cecil Field 102.fh8

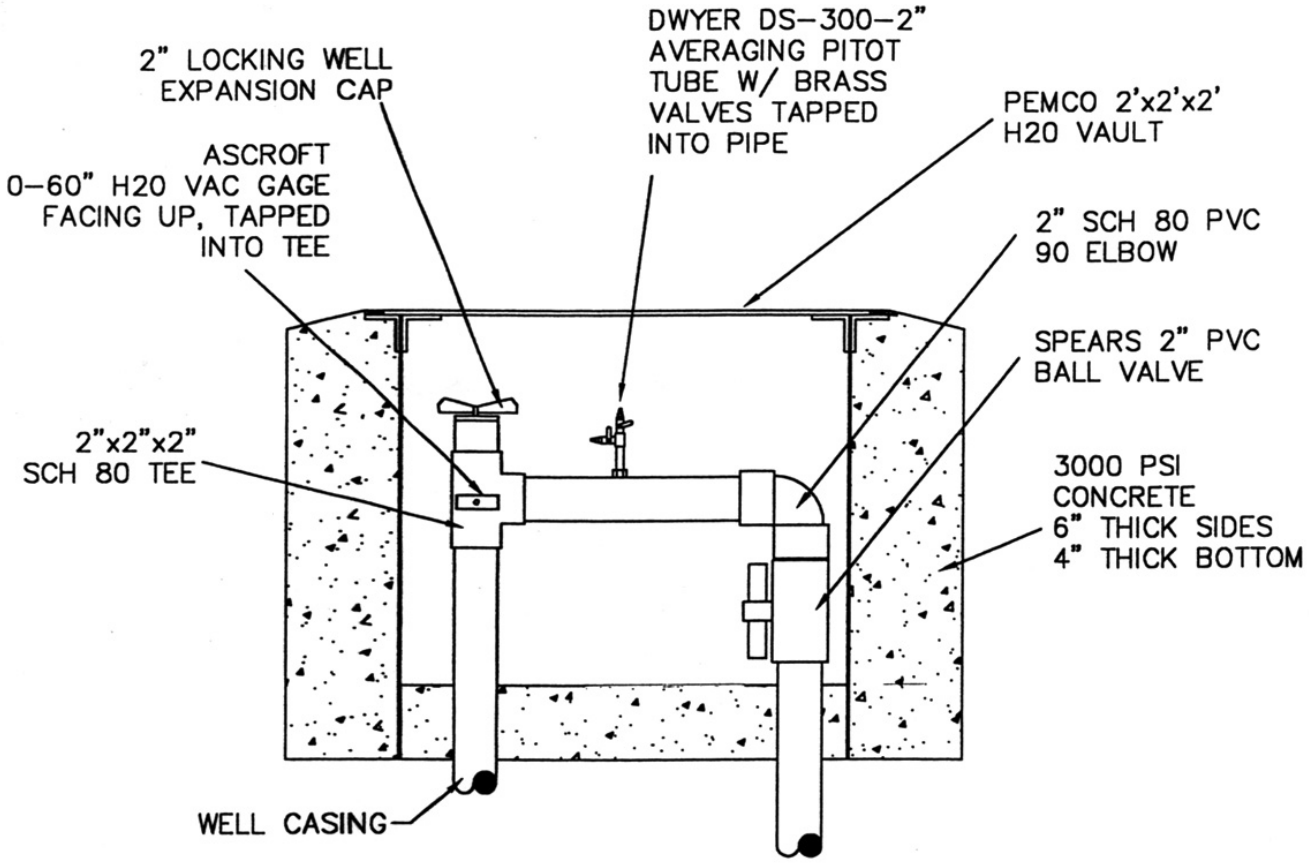

NOTES:
1. ALL PIPE AND FITTINGS ARE SCH 80 PVC W/ SOLVENT WELDED CONNECTIONS.
2. THE BALL VALVE IS SCH 40 PVC.
3. CONCRETE 6" THICK ON SIDES; 4" THICK ON BOTTOM.
4. LID SET APPROX. 1" HIGHER THAN GRADE FOR RAIN RUNOFF.
5. PITOT TUBE VALVE ON LOW PRESSURE PORT CAN SERVE AS SAMPLE PORT.
6. PORTABLE MAGNEHELIC WITH 0 TO 2" H20 RANGE WILL BE SUPPLIED FOR FLOWRATE MEASUREMENTS.

AS BUILT

SOURCE: Engineered Environmental Solutions Inc., 2002

Figure 5
SVE Well Detail
103rd Street and A Avenue
Jet Fuel Transfer Pipeline
NAS Cecil Field
Jacksonville, Florida

Appendix B

Vendor Data for Air Sparge System Equipment and Instrumentation

- **Air Sparge Compressor: Curtis Toledo RS-50-D; Rotary Screw Compressor**
- **Solenoid Valve: ASCO 8210 Series**
- **Air sparge Flowmeter: Dwyer VFC 123**
- **Electronic Drain Valve:**
- **Oil Removal Filter: Kaeser KOR 250**
- **Particulate Filter: Kaeser KFS 250**
- **Air sparge Wellhead Flowmeter: Dwyer RMC-122-BV**

CURTIS

BASE MOUNTED DIRECT DRIVE
ROTARY SCREW AIR COMPRESSORS
50-200 HP

The Symbol of Quality & Excellence Since 1854

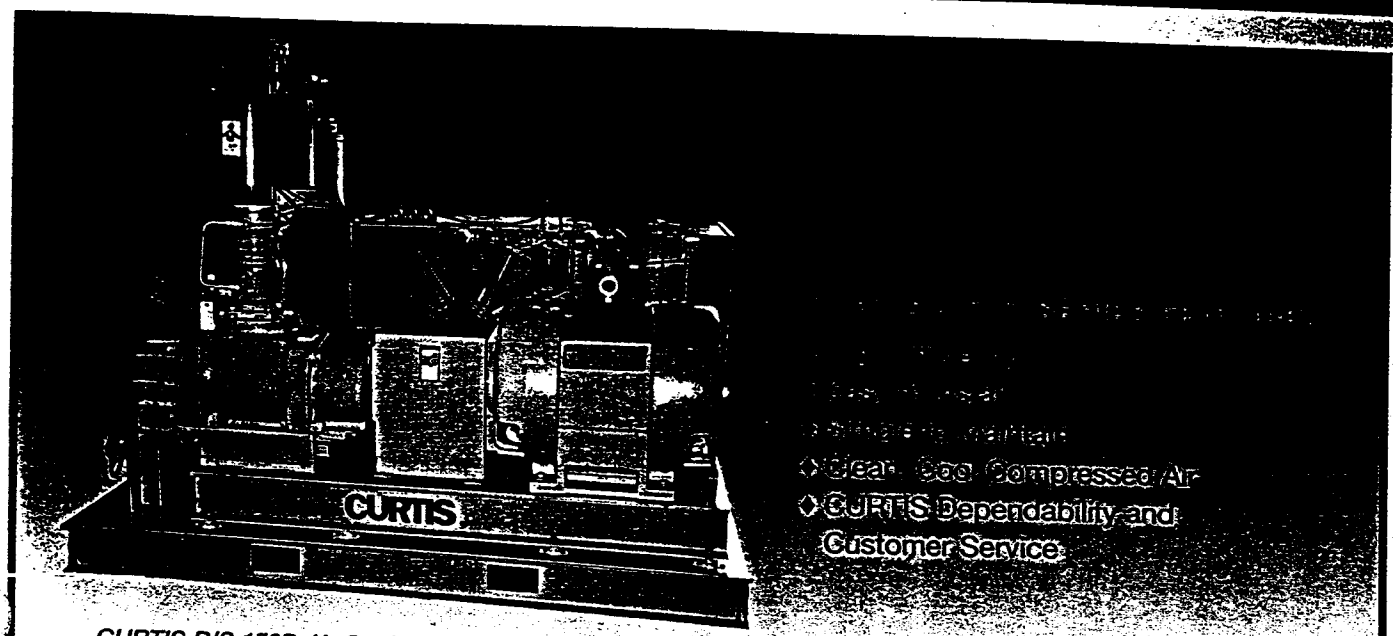

CURTIS R/S 150D Air Cooled Direct Drive Compressor

CURTIS AIR ENDS

Every CURTIS rotary screw compressor air end is manufactured to ISO 9001 certification using an advanced rotor design to deliver a maximum volume of air. This unique design used by CURTIS delivers maximum efficiency to pressures of 175 PSI.

The R/S-D Series power curve is kept at the correct RPM for peak efficiency by proper selection of the gear ratio. The R/S-D Series rotary screw air compressor's output per energy dollar compares favorably with any other compressor manufacturer in the world.

RUGGED

The CURTIS R/S-D Series direct drive compressor is rugged. Every component is designed for long operating life and minimal service. For example, the R/S-D air/oil cooler is oversized to dispose of the heat generated by compressing large volumes of air.

All fittings, controls, valves and electrical components have proven themselves under many years of operation in much larger compressors.

The R/S-D Series drive motor and air end are mounted on a separate sub-frame that is attached to the main frame with vibration isolation dampers. This method of installation maintains correct alignment of the motor and gear drive, and promotes long bearing life in both the motor and compressor.

CURTIS Rotary Screw Air Compressors have been successfully operating under severe conditions. For example, CURTIS is delivering air energy in the high humidity of oil well drilling platforms in the Caribbean. That heritage is what makes the R/S-D Series such a workhorse.

SIMPLE

CURTIS engineers keep ease of maintenance in mind throughout the design process. The R/S Series is designed with the fewest joints possible that are sealed to minimize the possibility of a leak. Components requiring regular, periodic servicing are readily accessible.

The R/S-D Series compressor is simple to install, easy to maintain, and engineered to give the user many years of trouble-free service.

CLEAN AIR

The R/S-D Series was developed for the production of a steady supply of high quality, contaminant free air. Oil carry over is less than 3 parts per million and can be reduced even further with a coalescing filter.

APPLICATION

The R/S-D Series is ideal for a wide variety of applications such as auto and production line painting, machine tool control, air tools, sand blasting, process air and the operation of plant air systems.

BASE MOUNTED DIRECT DRIVE

ROTARY SCREW AIR COMPRESSORS, 50-200 HP

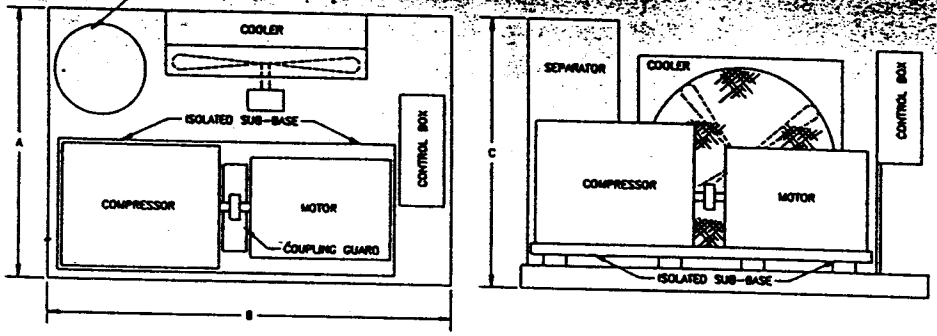

RS-D TOP VIEW

RS-D FRONT VIEW

STANDARD EQUIPMENT

- Air End Manufactured to ISO 9001 Standards
- Dry Type Inlet Filter/Silencer
- Oil Filter
- Motor/Compressor Drive Coupling
- Drive Guard
- Multi-Stage Oil Separator Unit
- ODP Motor, 60 HZ, 1.15 SF Tri-Voltage (Dual Voltage 125-200 HP)
- Safety Valve
- Pressure Gauge Liquid Filled
- Temperature Gauge
- Side-By-Side Air/Oil Cooler
- Nema 1 Control Panel w/Starters
- 115 Volt Control Transformer
- Separate Fan Motor and Starter on Air Cooled Models
- Hour Meter
- High Temperature Shut Down Switch with Light
- Oil Level Sight Glass
- Start-Stop Buttons
- Modulating Control
- Water Temperature Control Valve on Water Cooled Units
- Minimum Pressure Valve
- Factory Fill Lubricant
- Thermostatic Oil Valve
- Steel Base with Isolated Motor/Compressor Base
- High Separator Pressure–Switch
- Load/Unload Switch

SPECIFICATIONS

R/S D MODEL	A IN.	B IN.	C IN.	WT. ENCL. LBS.	WT. LESS ENCL. LBS.	HP	CFM/PSI 100	125	150	175	AIR OUT NPT
R/S 50-AD	42	72	44	1955	1750	50	225	212	186	172	1¼"
R/S 50-D	54	84	56	2375	1975	50	240	219	195	165	1½"
R/S 60-D	54	84	60	2570	2170	60	280	275	236	205	1½"
R/S 75-D	54	84	60	3140	2690	75	365	329	305	261	2"
R/S 100-D	66	84	60	3400	2950	100	465	458	363	308	2"
R/S 125-D	66	84	64	5320	4520	125	600	570	516	440	2"
R/S 150-D	66	84	64	5550	4750	150	760	706	583	546	2"
R/S 200-D	70	90	64	5850	5150	200	960	860	770	—	2½"

Copyright © 1997 Curtis-Toledo, Inc.

No part of this flyer may be reproduced or processed in any form or means, electronic or mechanical, including photocopying, xerography, printing or information storage and retrieval systems, without written permission from Curtis-Toledo, Inc.

Form No. RSD197-2

Distributed by

CURTIS *The Symbol of Quality & Excellence Since 1851*

Curtis-Toledo • 1905 Kienlen Ave • St. Louis, Missouri 63133 • Curtiscomp@aol.com

CAP-217
AUGUST, 1999
REV. G

CURTIS - TOLEDO

Rotary Screw Compressor Parts & Instruction Manual

Type R/S - D

WARNING: THIS MANUAL CONTAINS VITAL INFORMATION FOR THE SAFE USE AND EFFICIENT OPERATION OF THIS AIR COMPRESSOR.

CAREFULLY READ THE OPERATOR'S MANUAL BEFORE INSTALLING AND STARTING THE UNIT.

FAILURE TO ADHERE TO THESE INSTRUCTIONS COULD RESULT IN SERIOUS BODILY INJURY OR PROPERTY DAMAGE.

TABLE OF CONTENTS

Air and Oil Flow Diagram	13,14
Compressor Function and Control	3,4
Couplings Type S	22
Damaged Goods Policy	10
Dimensions	23
Drive Information	6
Electrical Schematics	20,21
Engineering Data	24
Initial Start-Up Procedure	2,3
Inlet Valve Diagram	15,16,17
Lubricant Specifications	6
Maintenance Record	31
Maintenance Schedule	25
Modulating Control	18
Oil Flow Diagram	13
Operating and Safety Instructions	12
Parts Ordering	9
Parts List	10,11
Parts Layout Diagram	14
Procedure for Long Term Storage of Compressor	24
Recommended Maintenance Schedule	5
Recommended Spare Parts	10
Safety and Warnings and Safety Precautions	1
Spare Parts Group	26,27,28,29,30
Standard Equipment	23
Trouble Shooting Guide	6,7,8,9
WYE/DELTA Low Torque Wiring Diagram and Schematic	19

MODEL: R/S 50D

SERIAL NO.: 6927D00015

PSI: 100 SCFM: 240 VOLTS: 230

SAFETY AND WARNINGS

Before you install this air compressor you should take the time to carefully read all the instructions contained in this manual.

Electricity and compressed air have the potential to cause severe personal injury or property damage.

Before installing, wiring, starting, operating or making any adjustments, identify the components of the air compressor using this manual as a guide.

The operator should use common sense and good working practices while operating and maintaining this unit. Follow all codes, pipe adequately, understand the starting and stopping sequence. Check the safety devices following the procedures contained in this manual.

Maintenance should be done by qualified personnel, adequately equipped with proper tools. Follow the maintenance schedules as outlined in the manual to insure problem free operation after start up.

Safety instructions in this manual are bold-faced for emphasis. The signal words DANGER, WARNING and CAUTION are used to indicate hazard seriousness levels as follows:

⚠ DANGER	Danger is used to indicate the presence of a hazard which will cause severe personal injury, death or substantial property damage if the warning is ignored.
⚠ WARNING	Warning is used to indicate the presence of a hazard which can cause severe personal injury, death or substantial property damage if the warning is ignored.
⚠ CAUTION	Caution is used to indicate the presence of a hazard which will or can cause minor personal injury or property damage if the warning is ignored.
NOTICE	Notice is used to notify people of installation, operation, or maintenance information which is important but not hazard-related.

SAFETY PRECAUTIONS

BEFORE PROCEEDING, READ CAREFULLY BEFORE INSTALLING THE COMPRESSOR OR PERFORMING ANY MAINTENANCE

ARNING

COMPRESSED AIR AND ELECTRICITY ARE DANGEROUS.

BEFORE DOING ANY WORK ON THIS UNIT, BE SURE THE ELECTRICAL SUPPLY HAS BEEN CUT OFF, LOCKED & TAGGED AND THE ENTIRE COMPRESSOR SYSTEM HAS BEEN VENTED OF ALL PRESSURE.

1. Do not use plastic pipe, rubber hose, or lead-tin soldered joints in any of the compressed air system.

2. Loose electrical connections can cause damage to the machine and may cause personal injury. Check and tighten electrical connections prior to first time start-up and after major maintenance.

3. Do not remove the covers, loosen or remove any fittings, connections or devices when this unit is in operation. Hot liquid and air under pressure that are contained within this unit can cause severe injury or death.

4. The compressor has high and dangerous voltage in the motor starter and ol box. All installations must be in dance with recognized electrical s. Before working on the electrical system, be sure to remove voltage from the system by use of a manual-disconnect-switch. A circuit breaker or fuse safety switch must be provided in the electrical supply line leading to the compressor.

Those responsible for installation of this equipment must provide suitable grounds, maintenance clearance and lightning arrestors for all electrical components as stipulated in O.S.H.A. 1910.308 through 1910.329.

5. Do not operate the compressor at higher discharge pressure than those specified on the Compressor Nameplate or motor overload will occur. This condition will result in motor compressor shutdown.

6. Use only safety solvent for cleaning the compressor and auxiliary equipment.

7. Install a manual shut off valve (isolation type) in the discharge line. A safety valve, with sufficient capacity to relieve full compressor capacity, must be installed between the compressor and the isolation valve.

8. Whenever pressure is released through the safety valve, it is due to excessive pressure in the system. The cause for the excessive pressure should be investigated immediately.

9. Before doing any mechanical work on the compressor:

A.). Shut the unit down.

B.) Electrically isolate the compressor by use of the manual disconnect switch in the power line to the unit. Lock and tag the switch so that it cannot be operated.

C.) Blow down the compressor and isolate the unit from any other source of air.

10. There can be adverse effects if compressor lubricants are allowed to enter plant air systems.

Air line separators, properly selected and installed, will minimize any liquid carryover.

The use of plastic bowls on line filters without metal guards can be hazardous. Their safety can be affected by either synthetic lubricants or the additives used in mineral oils. From a safety standpoint, metal bowls should be used on any pressurized system. Review of your plant air line system is recommended.

11. When a receiver is installed, it is recommended that occupational safety and health standards as covered in the Federal Register, Volume 36, number 105, part 11, paragraph 1910.169 be adhered to in the installation and maintenance of this receiver.

12. Before starting the compressor, its maintenance instructions should be thoroughly read and understood.

13. After maintenance functions are completed, covers and guards must be replaced.

NOTE: OPERATING SAFETY WARNINGS ARE INTERSPERSED THROUGHOUT THIS MANUAL IT IS THE RESPONSIBILITY OF THE OWNER, LESSOR AND/ OR OPERATOR TO READ AND FOLLOW THESE INSTRUCTIONS

UNIT MUST BE INSTALLED BY A LICENSED ELECTRICIAN, IN COMPLIANCE WITH ALL APPROPRIATE CODES

COMPRESSOR MUST BE GROUNDED, ACCORDING TO CODE USING A MINIMUM SIZE #8 WIRE OR LARGER

COMPRESSOR MUST BE INSTALLED IN AN AREA THAT IS PROTECTED FROM THE WEATHER

INITIAL START-UP PROCEDURE FOR ROTARY SCREW COMPRESSORS

Every Curtis Toledo Rotary Screw Compressor has been operated and thoroughly tested at the factory prior to shipment. Before putting the compressor into operation, preparation for initial start-up should be as follows:

1. VISUAL INSPECTION CHECK -
Inspect the compressor for any visible damage which may have occurred in shipment. If visible damage is found at the time of delivery, be sure notation is made on the freight bill by the delivering carrier and request a damage report. However, if the shipment is accepted and later you find that the compressor unit has been damaged, this is classified as "concealed damage". If concealed damage is found, report it within fifteen (15) days from date of delivery to the delivering carrier who then must prepare a damage report. Itemized supporting papers are essential for filing a freight claim. (See Damaged Goods Policy).

2. LOCATION CHECK -
Locate compressor on leveled surface. No special foundation is required. Allow at least three (3) feet clearance on all sides of the compressor to facilitate maintenance as well as free circulation of air. Unit should be located in a clean, well lighted area that will not have an ambient air temperature exceeding 105° F. If located in an enclosed room, Provisions must be made for proper ventilation so that the temperature of the room will not exceed 105° F.

OUTDOOR OPERATION
Unsheltered operations should be avoided. The unit must be protected against elements such as rain, snow and freezing temperatures. Failure to do so will void all warranties.

Any unsheltered installation must have at least:
- NEMA 4 controls
- Weather resistant cabinet
- TEFC motors
- Freeze protection (if applicable)

COLD WEATHER OPERATION
The unit should be installed inside a shelter heated to temperatures above freezing (32° F).

If installation must be in unheated area all control lines and drain lines must be heated to avoid freezing. The oil sump must be heated to maintain proper oil viscosity during shut downs.

R/S 8000 (synthetic) oil must be used.

Low temperature kits are available.

ELECTRIC CONNECTION CHECK -
Make sure that power supply and wiring is performed by a licensed electrician in accordance with the wiring diagram, National Electric Code, State Code and any other applicable codes. A wiring diagram is enclosed with each compressor. A magnetic starter of the proper size and type must be used.

4. GROUNDING CHECK -
The compressor should be grounded in accordance with the National Electric Code and any other applicable codes.

5. ELECTRIC QUALITY CHECK -
Test the quality and consistency of the electric power supply. Low voltage and/or voltage spikes can destroy the motor or other electrical components.

6. OIL LEVEL CHECK -
The receiver is filled at the factory with the correct amount of compressor oil. Check oil level gauge. For recommended lubrication, see Oil Specifications in the Recommended Maintenance Schedule. Oil level point is at mark on sight gauge when unit is off, and sitting for 10 minutes.

7. WATER PIPING CONNECTIONS CHECK -
(Water Cooled Models Only) - Make sure that the supply is connected and open. Piping supplied by the customer should be at least equal to the connections provided with 'he compressor.

8. AIR INTAKE PIPING: A Clean cool air supply is required for the satisfactory operation of your compressor. Where alternate sources of intake air are available, select the source supplying the cleanest air. The standard air filter with which the compressor is equipped is of sufficient size and design to meet all normal operating conditions.

When an outside air intake source is used, a flexible sleeve should be provided to connect the filter inlet to the inlet piping. The machine should be located as close as possible to the intake source because a restriction at the inlet will result in a capacity loss for the machine. Do not remove the filter except for maintenance. With an outside air installation, the following principles must be applied:

1) Keep the piping as short and direct as possible.
2.) Piping size must be at least as large as the inlet opening.
3) MAKE ABSOLUTELY SURE THAT INLET PIPING IS CLEANED AFTER FABRICATION.
4) Air inlet must be protected from the ingestion of rain water.

ARNING: INLET AIR CONTAINING REACTIVE ASES WILL CAUSE FAILURE OF THE LUBRICANT AND COMPRESSOR. INSURE AN AIR SUPPLY THAT IS WELL CLEAR OF ANY REACTIVE GAS SOURCE.

9. COMPRESSOR ROTATION CHECK -
TURN POWER ON. CHECK FOR PROPER ROTATION BY MOMENTARILY STARTING AND STOPPING THE MOTOR. DIRECTION ARROW IS SHOWN ON COMPRESSOR DRIVE END.

CAUTION: REVERSE ROTATION OF THE COMPRESSOR WILL CAUSE AIR END DAMAGE. AFTER ANY CHANGE OR RE-CONNECTION OF WIRING, CHECK FOR CORRECT ROTATION OF COMPRESSOR AND FAN. NEVER ALLOW THE COMPRESSOR TO RUN IN REVERSE ROTATION AS INJURY OR PROPERTY DAMAGE MAY RESULT.

10. A RECEIVER TANK - should always be used with base mounted units. The minimum amount of storage recommended is one gallon per CFM of capacity. This should be increased to three gallons per CFM of capacity for systems with sharp changes in demand.

INITIAL START UP

r completing the initial start-up checks, the machine ady to start. When starting the unit, turn the unl/load switch to unload. When unit is a full speed, turn to load position. The minimum pressure valve will allow 60-65 PSI to build in the separator before releasing down stream.
When the compressor is running, the following measurements should be watched carefully at the instrument panel:

1. Compressor Discharge Temperature -
Should be in the range of 160° F to 180° F when running at full load. (200° F is maximum allowable)

2. Tank Pressure Gauge -
For standard operating pressure 100 - 125 PSIG.

3. Receiver Pressure -
Should not be less than 100 PSIG when running full load.

4. WARNING: ELECTRIC MOTORS IN THE SIZE USED IN THE R/S-D COMPRESSORS MAY NOT BE STARTED MORE THAN 3 TIMES PER HOUR WITHOUT DAMAGE TO THE WINDINGS. RUN UNDER MODULATING CONTROL RATHER THAN RISK DAMAGE DUE TO FREQUENT STARTS WHICH WILL VOID THE WARRANTY.

All controls are 120V/60HZ

SHUTTING DOWN THE COMPRESSOR

When shutting down the compressor, turn the switch to unload and allow the separator tank time to blow down, i.e. 45-60 seconds. When separator tank reads zero pressure, turn off the compressor. **Warning: FAILURE TO FOLLOW THIS PROCEDURE WILL LEAD TO OIL CARRY OVER.**

COMPRESSOR FUNCTION & CONTROL

Standard R/S-D models are base mounted compressors. with furnished motor starters.

A constant run modulating control valve with low demand energy saving mode is the standard control furnished. This allows the compressor to unload then gradually to meet system air demand.

As demand decreases and air system pressure increases above the modulating valve low setting, the valve passes pressure to the inlet piston and the inlet piston closes enough to match the air system demand. As demand increases, and air pressure decreases toward the modulating valve low setting, less pressure is passed to the inlet piston and the inlet piston opens to match the air system demand.

When system air demand falls below 20% the low demand pressure switch de-energizes the 3-way solenoid valve. This isolates the modulating valve, activates the blow down valve and closes the inlet valve. At this time the separator blows down.

When the system pressure falls the pressure switch closes, energizing the 3 way solenoid valve, closing the blow down and allowing the inlet valve to open, thereby pumping up to system pressure again.

Optional modulating control with automatic start-timed stop has the same features as constant run modulating, but is best used in applications where air demand varies widely, or there are periods of no demand. A timer is added to the system which then stops the unit during long unload periods and then restarts the unit when system requires more air.

The modulating valve (RN42612) is adjusted by turning the screw in the valve dome, clockwise raises the pressure and counter-clockwise lowers the pressure. This adjustment should be made slowly The low demand pressure switch adjustment must be coordinated with (set slightly LOWER than) the modulating valve. The unit should begin blow down before the inlet valve is closed tight. USE A LIGHT TOUCH WHEN ADJUSTING THE MODULATING VALVE, AS THE METAL DIAPHRAGM IN THE VALVE CAN BE DAMAGED IF TOO MUCH PRESSURE IS APPLIED TO THE ADJUSTING STEM.

OPTIONAL AUTOMATIC DUAL CONTROL

This is a timed stop, automatic start up system that also will respond to the compressor air demand control.

With the switch in constant position the compressor will operate in its normal state (Modulating or Load/Unload).

With the switch in the auto position, when the compressor unloads completely and the separator tank blows down, a timer is activated which will shut off the unit after a timed period. (Minimum setting should be 10 minutes). When the system calls for air, the unit will restart automatically.

COMPONENTS USED:
1.) 2 Position Switch
2.) Timer
3.) Power "ON" Light
4.) Compressor "Stand-by" light.
5.) 2 Pole Relay (Units with stop-start push button control)

NOTE: All R/S-D units having modulating control, the pressure switch must always be set 2-3 PSI lower than the modulating valve. Minimum timer setting with dual control must be 10 minutes.

EFFECT OF VARIOUS TEMPERATURE CONDITIONS

A thermostatic mixing valve is Standard Equipment.

LWAYS SUPPLY CLEAN/ COOL AIR TO THE OMPRESSOR

ROTARY SCREW COMPRESSORS OF THE R/S-D SIZE PRODUCE AS MUCH HEAT AS A HOUSEHOLD FURNACE. The ambient temperature in a compressor room must not exceed 105° F. Provide a constant supply of fresh air to prevent overheating.

In addition, when operating in ambient temperatures under 32° F/0° C an oil sump heater must be used with the thermostatic mixing valve, which is standard equipment. When operating in ambients over 105° F/41° C consistently, water cooled heat exchangers or synthetic oil should be used. When operating in extreme dusty dirty ambients, water cooled units should be used along with extra heavy duty double inlet filtering.

Provision should also be made by the user to keep any moisture condensate traps from freezing.

INSTRUCTIONS: WATER COOLED COMPRESSORS

COMPRESSOR OIL COOLER

Adjust the Manual Valve on the Water Outlet from the Oil Cooler to maintain a discharge temperature of air/oil from the compressor at 170/200° F.

If an Automatic Water Flow Valve is used, adjust the Flow Control to maintain the same temperatures as above. The Valves' Sensing Bulb is located in the Oil Outlet from the Cooler.

The Oil Inlet Injection Temperature to the compressor should be a minimum 130° F.

COMPRESSOR AFTERCOOLER

Adjust the Manual Valve on the Water Outlet from the Aftercooler, so the shell of the Cooler is cool to the touch on the Air Outlet End and warm on the Air Inlet End. Too much water flow can cause damage to the Cooler where hot air meets extremely cold water.

An Electric Water Shut Off Solenoid may be installed at the Inlet of water to the unit. This valve must be open at all times when the compressor is operating

Do not use water lines smaller than the In and Out Connections at the unit.

RECOMMENDED MAINTENANCE SCHEDULE

AIR FILTER

equency of servicing will depend on the environmental nditions under which the compressor is operating. Service the air filter element under any of the following conditions, whichever comes first:

1.) Check air filter element weekly and change if outside surface of the element appears to be evenly coated with dirt.
2.) Change every two thousand (2000) hours of operation every six (6) months.
3.) Under unusually dirty ambient conditions, change filter as required (See 1 above).

The standard air filter with which the compressor is equipped is of sufficient size and design to meet all normal operating, conditions.

When an outside air intake source is used, a flexible sleeve should be provided to connect the filter inlet to the inlet piping. The machine should be located as close as possible to the intake source because a restriction at the inlet will result in a capacity loss for the machine. It is not intended that the filter be removed except for maintenance.

DANGER: DISCHARGE AIR IS NOT INTENDED FOR ATHING. USING DISCHARGE AIR FOR ATHING CAN LEAD TO SERIOUS INJURY OR ATH!

AIR/OIL SEPARATOR

Change the separator element under any of the following conditions, whichever comes first:

1.) Whenever pressure drop between system and separator exceeds 10 PSI. This pressure drop should be checked daily under full load conditions.
2.) Once a year.
3.) Every four thousand hours (4000).
4.) When excessive oil appears in the service line as a result of a faulty separator (due to pin hole leak), ruptured, or collapsed separator element.

Wrong lubricants will cause oil carryover

The Air/Oil Separator element never "wears out" but it does lose its effectiveness due to being plugged with dirt. To obtain long separator element life, it is important to change the air inlet filter and the lubricant filter on a regular schedule.

Moisture in the oil will cause oil carryover.

LUBRICANT FILTER

Change the lubricant filter element(s) under any of the following conditions, whichever comes first:
1) After first 100 hours then
2) Every three (3) months OR.
3) Every one thousand (1000) hours OR
4) Every lubricant change, WHICH EVER IS SOONER.

WARNING: Under very dirty operating conditions lubricants may become contaminated before the one thousand (1000) hour interval. It may be necessary to change the lubricant filter more often in dirty environments such as foundries.

THE USE OF SYNTHETIC LUBRICANTS DOES NOT CHANGE THE FILTER REPLACEMENT INTERVAL. FAILURE TO KEEP SYNTHETIC LUBRICANTS CLEAN WILL DESTROY THE AIR END!!!!!

LUBRICANT CHANGE

Change the lubricant after the first two thousand (2000) hours of operation to make sure that any initial contaminants in the system are removed.

DANGER: HOT OIL UNDER PRESSURE CAN CAUSE SEVERE INJURY, DEATH OR PROPERTY DAMAGE. BE SURE COMPRESSOR IS SHUT DOWN AND RELIEVED OF ALL PRESSURE BEFORE ATTEMPTING TO CHANGE OIL, OIL FILTER OR AIR/OIL SEPARATOR ELEMENT.

After that, the lubricant should be changed every two thousand (2000) hours, when using petroleum based Lubricating Coolant. Change every eight-thousand (8000) hours when using a recommended Synthetic Lubricant.

SYNTHETIC LUBRICANTS MUST BE TESTED EVERY 1000 HOURS. SYNTHETIC LUBRICANTS CAN FAIL IF CONTAMINATED AND BREAK DOWN WITHOUT WARNING! FAILURE TO TEST CAN LEAD TO DESTRUCTION OF COMPRESSOR.

CLEAN SCAVENGER LINE ORIFICE:
When no lubricant flow is visible in the sight glass.

LUBRICANT SPECIFICATIONS

Your unit has been filled and tested with high quality Rotary Screw Lubricant which can be used for year round operation to 105° F ambients. Proper maintenance and attention is a MUST to provide continuous trouble free operation. Follow the maintenance schedule provided for Air Filter, Lubricant Filter and Separator Element changes.

All models furnished with Petroleum Oil

PRODUCT NUMBER	R/S 2000
CURTIS PART NUMBER:	VO413
BASIC DESCRIPTION:	Petroleum ISO 32 or 46
RECOMMENDED OIL CHANGE:	2000 hours
AVAILABLE IN:	5 gallon container
When ordering specify part number:	VO413

For extended life
Available for all models

PRODUCT NUMBER	R/S 8000
CURTIS PART NUMBER:	VO414
BASIC DESCRIPTION:	Synthetic ISO 46
RECOMMENDED OIL CHANGE:	8000 hours
AVAILABLE IN:	5 gallon container
When ordering specify part number:	VO414

WARNING !!! DO NOT MIX LUBRICANTS. PROPERTY DAMAGE OR PERSONAL INJURY COULD OCCUR!!!

Always change Filter Element when changing lubricants.

WARNING: Stop unit, relieve air pressure and disconnect power before checking, adding or changing lubricants

FAILURE TO FOLLOW THESE PRECAUTIONS CAN LEAD TO PERSONAL INJURY AND/ OR PROPERTY DAMAGE.

All components supplied by Curtis - Toledo are compatible with the above lubricants. Check with your supplier to insure compatibility of components in your air supply system.

DIRECT DRIVE COUPLINGS

CURTIS MODEL	MANUFACTURER H.P. RATING	MAX. ALLOW PARALLEL	MIS-ALIGNMENT ANGULAR
R/S 50-D	80 H.P.	0.025	0.128
R/S 60-D	80 H.P.	0.025	0.128
R/S 75-D	100 H.P.	0.032	0.151
R/S 100-D	150 H.P.	0.032	0.151
R/S 125-D	150 H.P.	0.032	0.175
R/S 150-D	200 H.P.	0.032	0.175
R/S 200-D	250 H.P.	0.032	0.195

OIL COOLER MAINTENANCE

AIR COOLED MODELS

Oil cooler FIN surfaces MUST be cleaned periodically. Frequency of cleaning depends on surrounding environmental conditions. Dirt and dust buildup on the cooling fins will cause a decrease in thermal efficiency and cooling capacity. **This will ultimately lead to compressor overheating and potential compressor failure.**

GENERAL TROUBLE SHOOTING GUIDE

FAILURE TO START

Cause: Power not turned on
Correction: Turn power "ON" by connecting main disconnect switch or circuit breaker.

Cause: Blown main circuit fuse
Correction: Replace fuse

Cause: Blown control circuit fuse
Correction: Replace fuse

Cause: Safety circuit shutdown - high discharge temperature
Correction: Correct situation as per solutions described under "HIGH DISCHARGE AIR TEMPERATURE", of this trouble shooting guide, then press manual reset button at high discharge temperature switch. Restart compressor.

Cause: Overloaded motor - Thermal overload relay tripped.
Correction: Press motor reset button.

Cause: Low Voltage.
Correction: Test voltage and correct.

Cause: Faulty start switch or connection.
Correction: Check and correct.

Cause: Power failure.
Correction: Check power supply.

UNSCHEDULED SHUTDOWN

Cause: High discharge temperature.
Correction: Correct situation as per solutions described in "HIGH DISCHARGE TEMPERATURE", section in this trouble shooting guide, then press manual reset button at high discharge temperature switch. Restart the compressor.

Cause: Overloaded motor - Thermal overload relay tripping.
Correction: Press reset button at motor starter.

Cause: Power failure.
Correction: Check power supply.

LOW RECEIVER PRESSURE

Cause: Excessive air demand.
Correction: Reevaluate air demand.

Cause: Excessive leaks in service lines.
Correction: Repair service lines.

Cause: Inlet valve not fully open.
Correction: Correct situation as per solutions described under "MALFUNCTIONS IN THE CAPACITY CONTROL SYSTEM" - "(A) Inlet Valve Not Opening or Closing in Relation to Air Demand", section of this trouble shooting guide.

Cause: Plugged air cleaner.
Correction: Clean air filter element or replace with new element.

Cause: Air pressure switch not set correctly
Correction: Readjust air pressure switch to desired cut-in and cut out pressures.

Cause: Faulty receiver pressure gauge.
Correction: Check and if found faulty, replace it.

HIGH DISCHARGE AIR TEMPERATURE

Cause: Not enough cooling water flowing through cooler (water cooled models).
Correction: Check water system for possible restriction, including water regulating valve.

Cause: Inadequate circulation of cooling air at cooler (air-cooled models).
Correction: Check location of cooler to make sure that there is no restriction to free circulation of cooling air.(SEE PAGE 4) Also check fins at the cooler and if found dust laden, clean them with air while the machine is not running. If greasy dirt the unit may have to be power washed as above.

Cause: Low oil level in the reservoir.
Correction: Add oil and bring oil level to recommended level. Also check oil system for possible leaks.

Cause: Clogged oil filter.
Correction: Replace oil filter element(s).

LOW AIR DELIVERY

Cause: Plugged air filter.
Correction: Clean air filter element(s) or replace with new element(s).

Cause: Excessive leaks in service lines.
Correction: Repair service lines.

Cause: Inlet valve not opening fully.
Correction: Correct situation as per solutions described under "MALFUNCTIONS IN THE CAPACITY CONTROL SYSTEM" - "(A) Inlet Valve Not Opening or Closing in Relation to Air Demand". section of this trouble shooting guide.

SAFETY VALVE BLOWS

Cause: Air pressure switch not set correctly
Correction: Readjust air pressure switch so that the compressor unloads at desired pressure.

Cause: Inlet valve not closing properly in relation to air demand.
Correction: Correct situation as per solutions described under "MALFUNCTIONS IN THE CAPACITY CONTROL SYSTEM" - "(A) Inlet Valve Not Opening or Closing in Relation to Air Demand", section of this trouble shooting guide.

Cause: Plugged separator.
Correction: Replace with new air/oil separator.

Cause: Faulty receiver pressure gauge.
Correction: Check gauge for accuracy.

Cause: Faulty safety valve.
Correction: Check safety valve for correct pressure setting. If valve is leaking, replace it.

EXCESSIVE OIL CONSUMPTION

Cause: Too high oil level in the separator tank.
Correction: Bring oil down to recommended level by draining the separator. Use oil level gauge as a guide.

Cause: Over filling the reservoir.
Correction: Oil level should only be checked after unit has been of for 5 minutes or longer. Fill only to guide marker.

Cause: Plugged scavenger line.
Correction: Clean scavenger line.

Cause: Faulty oil filter(s).
Correction: Replace oil filter element(s).

Cause: Oil break down.
Correction: Correct situation as per solutions described under "OIL BREAK DOWN" section of this trouble shooting guide.

Cause: Wrong kind of oil being used.
Correction: Refer to page 5 for type of oil.

Cause: Rapid start/stop or load/unload (short cycle)
Correction: Set controls to correct short cycling. (C. Page 8)

Cause: Excessive oil foaming.
Correction: Set controls to correct short cycling. (C. Page 8)

Cause: Scavenger line not reaching the bottom of the separator.
Correction: Check scavenger line connections in separator

Cause: Operating pressure too low.
Correction: Receiver pressure should not fail below 60 PSIG when running loaded. Leak in system or air consumption too great.

Cause: Faulty or damaged separator. (e.g. - loose separator assembly, defective primary element.).
Correction: Change air/oil separator

Cause: Leak in oil line.
Correction: Check for leaks and correct.

Cause: Shaft seal failure.
Correction: Replace necessary component of the seal or the complete seal as deemed necessary.

Cause: Rapid pressure loss in system.
Correction: Look for applications that use large amounts of air very quickly an air receiver should be installed in the system.

Cause: Starting the unit before the separator has been blown down.
Correction: Change procedure and instruct operators on use.

FREQUENT AIR/OIL SEPARATOR CLOGGING

Cause: Faulty air cleaner or inadequate cleaner for the environment.
Correction: If faulty air filter element(s), replace them. If air filter is inadequate for environment, replace it with a heavy duty cleaner.

Cause: Wrong kind of oil being used.
Correction: Refer to page 6 for type of oil.

OIL BREAK DOWN

Cause: Extreme operating conditions such as high oil injection and compressor discharge temperatures, high ambient temperature with high humidity and high receiver pressure.
Correction: Operate compressor at recommended receiver pressure and oil injection temperature.

Cause: Contaminated oil.
Correction: Service air filter element and oil filter element promptly in accordance with recommended maintenance schedules.

Cause: Negligence in draining condensate from the separator.
Correction: Drain condensate from the separator periodically. More frequent draining might be necessary when operating at high ambient temperature and high humidity environment.

Cause: Mixing of different brands of oil
Correction: DO NOT MIX DIFFERENT BRANDS OF OIL.

Cause: Wrong kind of oil being used.
Correction: Refer to page 6 for type of oil.

WARNING: PERSONAL INJURY OR PROPERTY DAMAGE MAY RESULT FROM MIXING OILS.

Cause: Use of wrong oil.
Correction: Follow compressor oil specifications as described in the INSTRUCTION MANUAL (see page 6)

MALFUNCTIONS IN THE CAPACITY CONTROL SYSTEM

(A) Inlet Valve Not Opening or Closing in Relation to Air Demand

Cause: Improper setting of air pressure switch or faulty switch.
Correction: Readjust air pressure switch to proper settings If faulty, replace switch.

Cause: Faulty unloader solenoid valve.
Correction: Replace unloader solenoid valve.

Cause: Jammed inlet valve.
Correction: Check inlet valve assembly

Cause: Pressure regulator set to low.
Correction: Adjust pressure regulator to 60 PSI minimum.

(B) Compressor Does not Unload When There Is No Air Demand

Cause: Air pressure switch not set correctly
Correction: Readjust air pressure switch setting.

Cause: Faulty solenoid valve.
Correction: Check wiring and solenoid valve.

Cause: Faulty air pressure switch.
Correction: Replace air pressure switch.

Cause: Leaks in service lines.
Correction: Repair leaks.

(C) Too Rapid Cycling Between Load and Unload

Cause: Too small volume of air in service line.
Correction: Provide sufficient volume, by adding air receiver.

Cause: Cut-in and cut out pressures too close at air pressure switch.
Correction: Re-adjust cut-in and cut out pressure settings.

Cause: Using too much air.
Correction: Add larger compressor, check system for air leaks.

Oil Coming Out Through Air Cleaner At Shutdown

Cause: Faulty Inlet Valve.
Correction: Inspect check valve. If necessary, replace.

Oil Coming Out Through Blow Down Valve

Cause: Too high oil level in the separator.
Correction: Bring oil level to recommended oil level by draining the separator. Use the oil level gauge as a guide

Cause: Cycling too often between load and unload.
Correction: Correct situation as per solutions described under "MALFUNCTIONS IN THE CAPACITY CONTROL SYSTEM" - "(C) Too Rapid Cycling Between Load and Unload", section of this trouble shooting guide.

Too Frequent Air Cleaner Clogging

Cause: Compressor operating in highly contaminated area.
Correction: Use remote air intake mounting.

Cause: Air cleaner not adequate for the operating conditions.
Correction: Use heavy duty air cleaner.

INSTRUCTIONS FOR ORDERING PARTS

NOTE: When ordering parts
1) List the compressor model and serial number.
2) List the compressor motor horsepower.
3) List the part description.

A BILL OF MATERIALS WITH PART NUMBERS AND DESCRIPTION FOR YOUR SPECIFIC COMPRESSOR IS PROVIDED WITH EACH UNIT.

EXAMPLE:
When ordering and inlet filter element for a 75 HP base mounted unit, please provide:

1) Model Number, Serial Number, and Horsepower i.e. R/S75-D, S/N 1234 & 75 HP
2) Part Number and Description i.e. RN27526, Air/Oil separator

PART NAME LISTED BY GROUP, REFER TO BILL OF MATERIAL FOR PART NUMBER.

CABINET GROUP
Cabinet
Pressure Gauge
Temperature Gauge

AIR GROUP
Air End
Motor
Compressor Coupling and Drive Coupling Element
Steel Base
Safety Valve
Check Valve, Discharge Valve, & Outlet Valve
Pressure, Temperature and Oil Level Gauge
Scavenger Line Sight Glass
Separator Tank and Separator Element
Inlet Valve, Inlet Filter Assembly and Inlet Filer Element
Service Valve
Flex Coupling

OIL GROUP
Oil Cooler
Fan Blade, Fan Motor and Fan Guard
Oil Filter Assembly
Oil Drain Valve and Oil Stop Valve (when used

CONTROL AND ELECTRIC GROUP
Pressure Switch
Control Box and Control Transformer
Unloader/Blow down Solenoid Valve
Pneumatic Blow Down Valve
Control Relay
High Temperature Shutdown Switch & Well
High Temperature Light
Fuse Block-Control & Fuse-Control
Main Motor Magnetic Starter & Fan Motor Starter
Start Push Button & Stop Push Button
2 position switch
Stop delay relay timer

MISCELLANEOUS GROUP
Thermal Mixing Valve
Aftercooler (Standard)
Moisture Separator (Standard on base mounted)
Auto Drain (optional)
Modulating valve

SPARE PARTS GROUP

4,000 HOUR KIT (SEE Pg. 26)
2 Air filter elements
4 Oil filter elements
1 Air/Oil separator element

8,000 HOUR KIT (SEE Pg. 28)
4 Air filter elements
8 Oil filter elements
2 Air/Oil separator elements

12,000 HOUR KIT
6 Air filter elements
12 Oil filter elements
1 Inlet Valve Kit
3 Air/Oil separator elements
1 Thermo mixing valve kit
1 Coupling Element
1 Minimum pressure valve kit

RECOMMENDED FOR COMPRESSORS EXPORT (SEE Pg. 29)

LOST or DAMAGED GOODS POLICY

All goods are shipped "F.O.B." factory (Freight on Board). In essence, this means that the customer owns the goods once they leave our dock and any lost or damaged goods are his responsibility. The F.O.B. policy is consistently used by every manufacturer in the compressed air industry. Freight allowed or freight prepaid shipments are still under the F.O.B. terms.

This F.O.B. policy is used by all manufacturers for one reason - it is the only workable policy, for only the "receiving point" can inspect the arriving shipment and properly file a claim. It would be impossible for the "shipper" to inspect equipment hundreds, or sometimes even thousands of miles away from his location.

PROCEDURE FOR HANDLING DAMAGED SHIPMENTS

PROCEDURE #1

The "Lost/Damaged Goods Policy", is designed to be a clear, fair and effective aid in helping the customer file his claim.

1) The customer at the receiving point MUST inspect each shipment for damage.

2) If the shipment is damaged, the customer should so note it on the freight bill.

3) The customer should request an inspector from the freight company to inspect the equipment - immediately. It is best to send a confirming letter with the following information:
   a. Freight bill number.
   b. Date delivered - shipper's name & address.
   c. Description of item(s) damaged.
   d. Description of damage (a polaroid picture if possible.)
   e. A copy of your invoice for the equipment.

4) After inspection, (before the inspector leaves):
   a. Get a copy of the inspection report.
   b. Request the unit be shipped back "free astray".
   c. Request a credit for the original freight bill.

Call the factory and:
   a. Get a Return Material Tag (RMT number).
   b. Give a purchase order for repair. The purchase order should refer to the item and trucker claim.

6) We will accept the shipment back and repair (under normal conditions) and return it within (7) seven working days.

7) We will invoice the customer for the repair which will then become "part" of your claim. The invoice must be presented to the trucking claim department along with their claim form.

8) We suggest if the trucker does not pay within 30 days that you call and / or write the ICC making a formal complaint of poor service. Also advise Curtis Toledo in writing for follow-up.

PROCEDURE #2

If damage can be repaired at the receiving point, follow Procedure 1, steps 1 through 4a. Repair the unit and make out a detailed invoice to the trucker showing labor hours, labor rate, materials used, and cost of materials,

AIR COMPRESSOR OPERATING AND SAFETY PRECAUTIONS: Because an air compressor is a high-speed, rotating piece of machinery, the same common sense safety precautions should be observed as with any piece of machinery of this type where carelessness in operation or maintenance can be hazardous to personnel.

In addition to the many obvious safety rules that should be followed with this type of machinery, the following specific precautions and prohibitions may prevent personal injury or property damage.

1. Pull main disconnect switch and disconnect any separate control lines, if used, before attempting to work on/or perform maintenance on the unit, Use std. lockout procedure.

2. Do not attempt to remove any compressor parts without first relieving the entire system of pressure.

3. Do not attempt to service any part while machine is operating.

4. Do not operate the compressor at pressures in excess of its rating.

5. Do not operate the compressor at speeds in excess of its rating.

6. Do not remove any guards, shields, or screens while the compressor is operating.

7. Observe terminal pressure gauge daily, to be sure automatic control system is governing compressor operation within proper limits.

8. Periodically check all safety devices for proper operation.

9. Periodically test all warning lights.

10. Do not play with compressed air. Pressurized air can cause serious injury to personnel,

11. Be sure no tools, rags, or loose parts are left on the compressor or drive parts.

12. Do not use flammable solvents for cleaning.

13. Exercise cleanliness during maintenance and when making repairs. Keep dirt away from parts by covering parts and exposed openings with clean cloth or kraft paper.

14. Do not operate the compressor without guards, shields, and screens in place.

15. Do not install a check valve between the compressor discharge and the receiver.

16. Do not operate compressor in areas where there is a possibility of ingesting flammable or toxic fumes

17. Never disconnect (or jumper) high air temperature switch and operate the machine. Serious injury or property damage may result

18. Know what mode a machine is in before working around it. The power can be on and a machine may be in auto restart mode.

19. **INSPECT COMPRESSOR FOR OPERATING AND SAFETY CONDITIONS AT THE START OF EACH SHIFT.**

Pressure vessels (receivers, aftercoolers, intercoolers) may require ASME Code stamping to meet local codes. Investigate code requirements before operation to make sure all requirements have been met.

The owner, lessor, or operator of the compressor is hereby notified and forewarned that any failure to observe these safety precautions may result in damage or injury.

Curtis Toledo expressly disclaims responsibility or liability for any injury or damage caused by failure to observe these specified precautions or by failure to exercise that ordinary caution and due care required in operating or handling the unit even though not expressly specified herein.

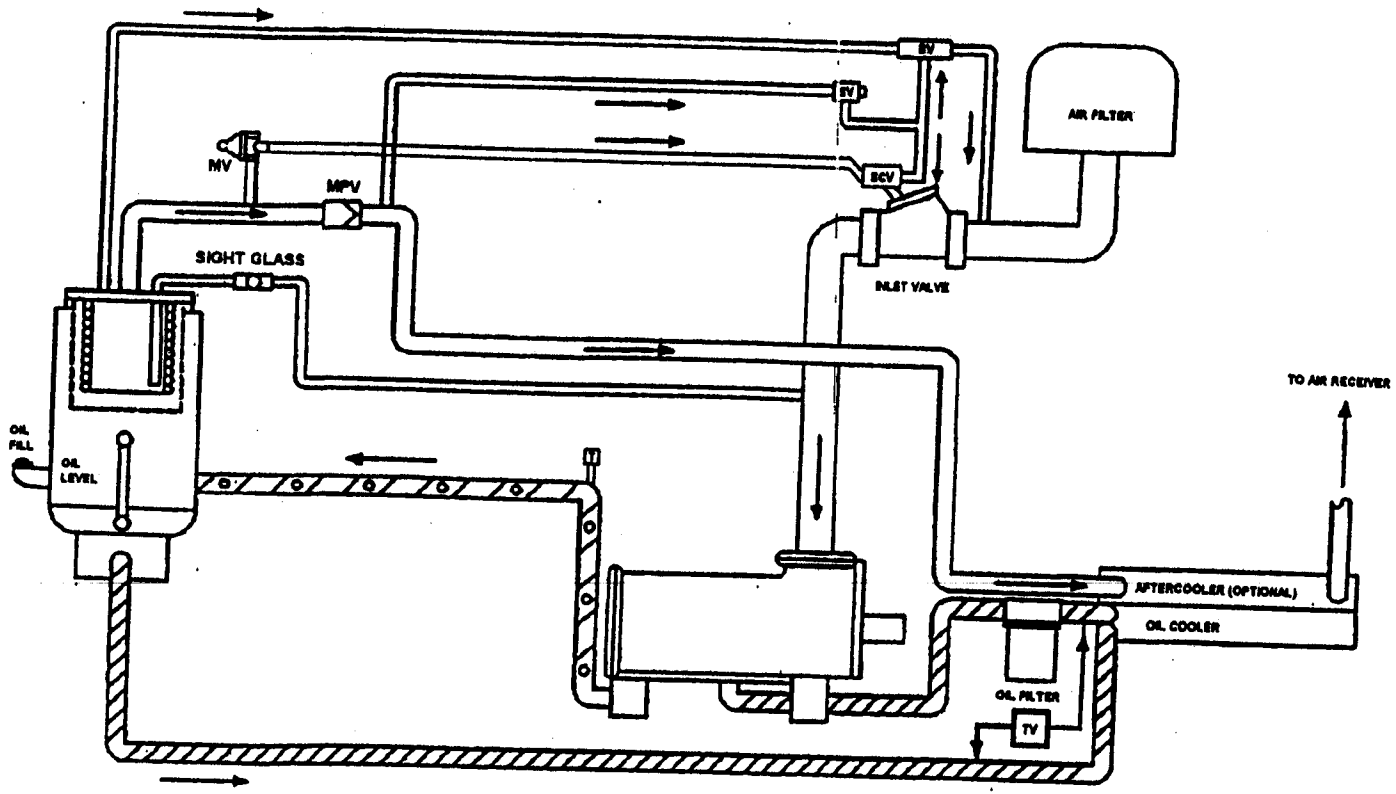

LEGEND

OIL

AIR + OIL

MPV - MINIMUM PRESSURE VALVE
MV - MODULATING VALVE (STANDARD)
SV - SOLENOID VALVE
T - HIGH TEMPERATURE SWITCH
BV - PNEUMATIC BLOWDOWN VALVE
TV - THERMAL BY-PASS VALVE
SCV - SHUTTLE CHECK VALVE

CURTIS - TOLEDO, INC
1906 Kienlen Ave.
St. Louis, MO 63133
PHONE: 314 - 383 - 1300 FAX: 314 - 381 - 1439

ROTARY SCREW AIR - OIL FLOW DIAGRAM

MACHINE:	ROTARY SCREW	DRAWING:	CS698
DIAGRAM:	FLOW	DRAWN:	8 - 9 - 95

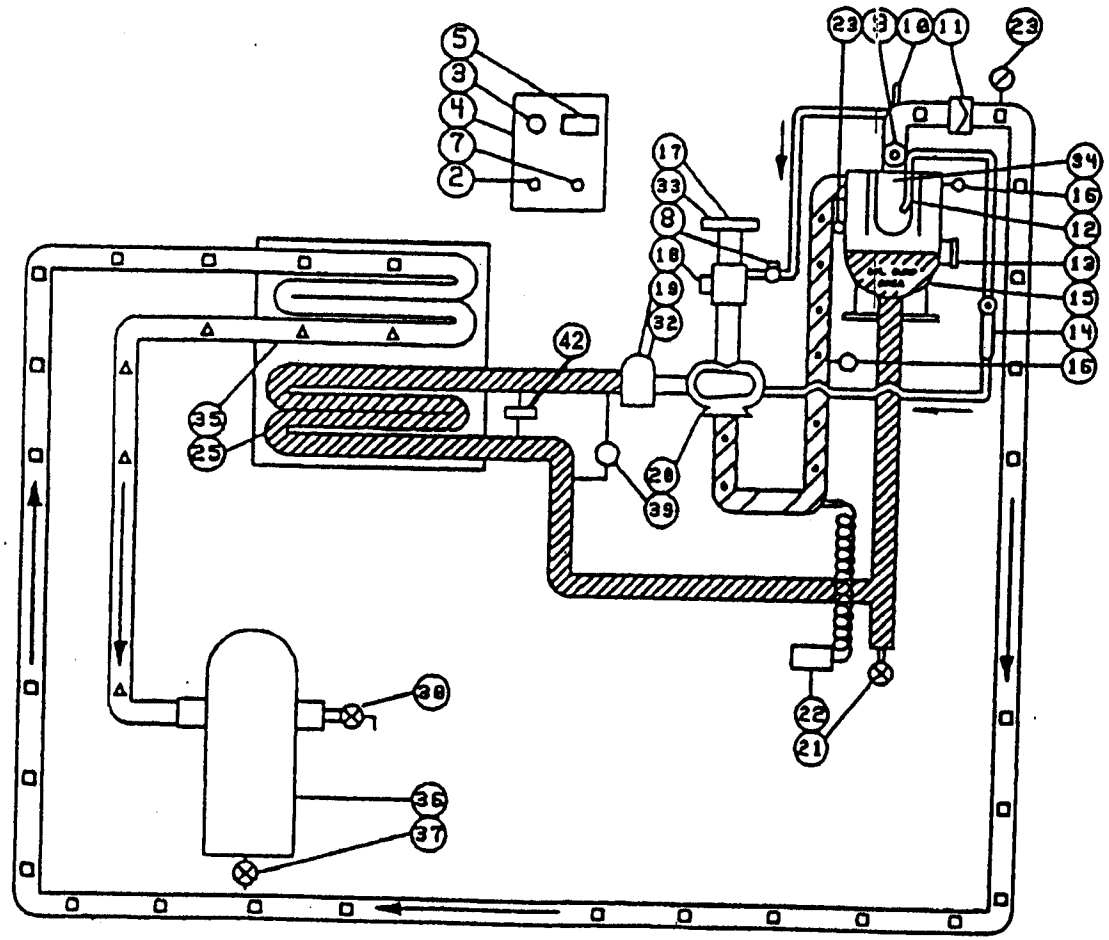

ITEM	REF	DESCRIPTION
1	060	PRESSURE SWITCH
2	064	HIGH TEMP SHUTDOWN LIGHT
3	063	HOUR METER
4	061	CONTROL BOX
5	062	115V CONTROL TRANSFORMER
6	064	MODULATING VALVE
7	065	SELECTOR SWITCH
8	064	UNL / BLOW DOWN VALVE
9		MIN. PRESS. ORIFICE
10	018	RELIEF VALVE
11	019	MINIMUM PRESSURE VALVE
12		SCAVENGER LINE
13	022	OIL LEVEL SIGHT GLASS
14	023	SCAVENGER LINE SIGHT GLASS
15	025	AIR / OIL SEPARATOR
16	021	TEMPERATURE GAUGE
17	027	INLET AIR FILTER
18	033	INLET VALVE
19	044	OIL FILTER
20	010	AIR END
21	046	OIL DRAIN
22	066	HIGH TEMP SHUTDOWN
23	020	PSI GAUGE
25	048	OIL COOLER
26	011	MOTOR
27	014	BELTS
28	012	MOTOR SHEAVE
29	013	COMPRESSOR SHEAVE
30	016	MOTOR BASE
31	041	FAN BLADE
32	045	OIL FILTER ELEMENT
33	028	INLET FILTER ELEMENT
34	026	AIR / OIL SEPARATOR ELEMENT
35	081	AFTERCOOLER
36	082	MOISTURE SEPARATOR (R/S)
37	030	TANK DRAIN
38	031	SERVICE VALVE
39	016	STEEL BASE
40	043	FAN GUARD
41	042	FAN MOTOR
42		THERMAL BY-PASS VALVE
43		
44		

OIL

AIR & OIL

CLEAN AIR

COOL CLEAN AIR

CURTIS TOLEDO

1905 Kienlen Ave.
St. Louis, MO. 63133

PHONE: 314-383-1300 FAX: 314-381-1439

FLOW AND PARTS DIAGRAM - BASE MOUNT

MACHINE: ROTARY SCREW | DRAWING: CS636

DIAGRAM: FLOW | DRAWN: 8-9-95

"NORMALLY OPEN" (POWER TO CLOSE) - LINE PRESSURE / FLOW AGIANST THE VALVE SEATING DISC WILL OPEN THE VALVE. CONTROL PRESSURE APPLIED TO THE TOP OF THE DIAPHRAGM WILL CLOSE THE VALVE. (CONTROL PRESSURE SHOULD BE APPLIED AT PORT "C")

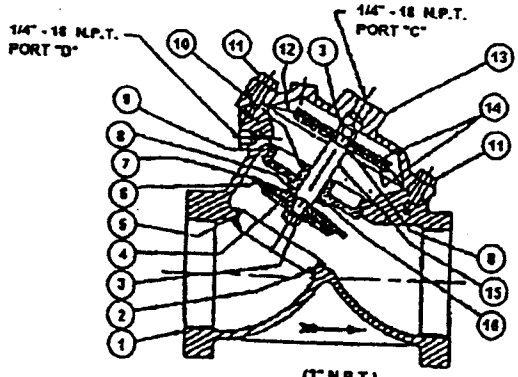

RN24543

INLET VALVE 50 - 60 HP

NO.	DESCRIPTION			STD.	PART NO.	QTY.
1	BODY	SCREWED	CAST IRON	*	427 - AS	1
			CAST BRASS		427 - ASB	
		FLANGED	CAST IRON	*	427 - AF	
			CAST BRASS		427 - AFB	
2		CAST BRASS		*	427 - M	1
		CAST SILICON IRON			427 - MS	
		CAST STN. STL.			427 - MV	
3				*	NUS - 0013	2
4		FORGED BRASS		*	427 - K	1
		STN. STL.			427 - KS	
5		BUNA N		*	ORB - 233	1
		ETH. PROP.			ORE - 233	
		VITON			ORV - 233	
6		BUNA N		*	427 - J	1
		ETH. PROP.			427 - JE	
		VITON			427 - JV	
7	DISC HOLDER	ALUMINUM BRONZE		*	427 - H	1
		CAST SILICON IRON			427 - HS	
8	GASKET			*	424 - R	2
9	O - RING	BUNA N		*	ORB - 237	1
		ETH. PROP			ORE - 237	
		VITON			ORV - 237	
10	O - RING RETAINER (SEE ASSY. TOOLS INCLUDE)	FORGED BRASS		*	427 - G	1
		CAST SILICON IRON			427 - GS	
11	HEX HD. CAP SCREW (3/8 - 16 x 7/8)			*	SCS - 0020	2
12	DIAPHRAGM	BUNA N / NYLON		*	427 - FB	1
		VITON / NOMEX			427 - FV	
13	CAP	CAST IRON		*	427 - C	1
		CAST BRASS			427 - CB	
14	DIAPHRAGM PLATE	FORGED BRASS		*	427 - D	2
		STN. STL.			427 - DS	
15	SHAFT			*	427 - L	1
16	O - RING	BUNA N		*	ORB - 114TC	1
		ETH. PROP.			ORE - 114	
		VITON			ORV - 114	
17	HEX NUT (3/8 - 16)			*	NUS - 0014	6
18	HEX HD. CAP SCREW (3/8 - 16 x 1 1/2)			*	SC2 - 0025	6

REPAIR PARTS KITS

DESCRIPTION	BUNA N
1) DIAPHRAGM & SEALS KIT CONSISTS OF ITEM NOS. 5, 6, 8, 9, 12 & 16	427 - RA
2) INTERNAL METAL PARTS KIT NORMALLY OPEN MODEL CONSISTS OF STANDARD (*) ITEM NOS. 3, 4, 7, 10, 14, 15	427 - RF

1) Kit No. RN24558
2) Kit No. RN24567

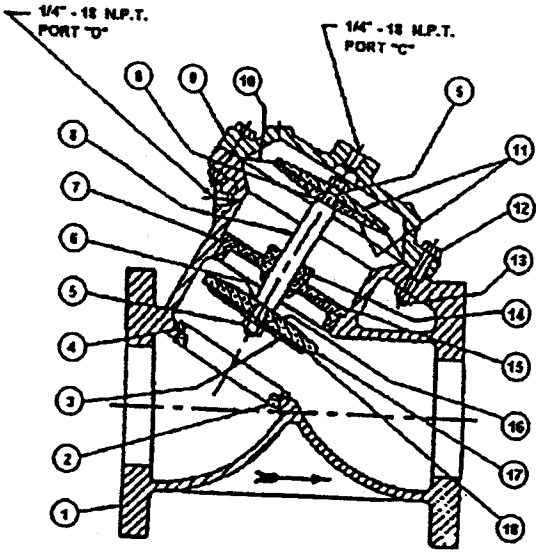

RN24545 (4" PIPE SIZE)

INLET VALVE 75 - 100 - 150 HP

NO.	DESCRIPTION		STD.	PART NO.	QTY
1	BODY	CAST IRON	*	428 - A	1
		CAST BRASS		428 - AB	
2	SEAT	CAST BRASS		428 - LA	1
		CAST SILICON IRON		428 - LAS	
		CAST STN. STL.		428 - LAV	
3	DISC PLATE	FORGED BRASS		428 - K	1
		CAST SILICON IRON		428 - KS	
4	O - RING	BUNA N		ORB - 241	1
		ETH. PROP.		ORE - 241	
		VITON		ORV - 241	
5	HEX LOCK NUT (3/8 - 24)			NUS - 0017	2
6	GASKET			200 - LL	2
7	O - RING	BUNA N		ORB - 245	1
		ETH. PROP.		ORE - 245	
		VITON		ORV - 245	
8	SHAFT			428 - L	1
9	CAP	CAST IRON		428 - C	1
		CAST BRASS		428 - CB	
10	DIAPHRAGM	BUNA N / NYLON		428 - FB	1
		VITON / NOMEX		428 - FV	
11	DIAPHRAGM PLATE	FORGED BRASS		428 - D	2
		CAST SILICON IRON		428 - DS	
12	HEX HD. CAP SCREW (3/8 - 16 x 2")			SC2 - 0027	11
13	HEX NUT (3/8 - 16)			NUS - 0014	11
14	O - RING RETAINER (SEE ASSY. TOOL INCLUDE)	FORGED BRASS		428 - G	1
		CAST SILICON IRON		428 - GS	
15	O - RING	BUNA N		ORB - 210TC	1
		ETH. PROP.		ORE - 210	
		VITON		ORV - 210	
16	DISC SPACER	BRASS		428 - HA	1
		STN. STL.		428 - HAS	
17	DISC HOLDER	ALUM. BRONZE		428 - H	1
		CAST SILICON IRON		428 - HS	
18	DISC	BUNA N		428 - J	1
		ETH. PROP.		428 - JE	
		VITON		428 - JV	

REPAIR PARTS KITS

DESCRIPTION	BUNA N
1) DIAPHRAGM & SEALS KIT CONSISTS OF ITEM NOS. 4, 6, 7, 10, 15 & 18	428-FA
2) INTERNAL METAL PARTS KIT NORMALLY OPEN MODEL CONSISTS OF STANDARD (*) ITEM NOS. 3, 5, 8, 14, 16, 17	428-RF

1) Kit No. RN24560
2) Kit No. RN24568

CURTIS - TOLEDO, INC
1905 Kienlen Ave.
St. Louis, MO 63133
PHONE: 314 - 383 - 1300 FAX: 314 - 381 - 1439

AIR INLET DIAGRAM

MACHINE: ROTARY SCREW	DRAWING: CS637B
DIAGRAM: AIR INLET	DRAWN:

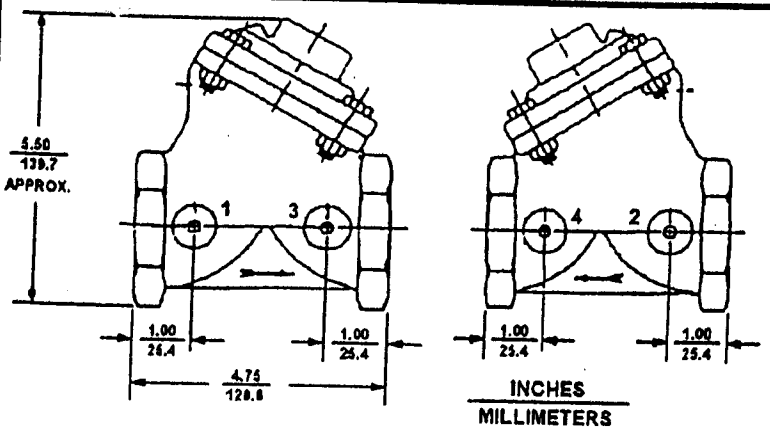

NOTE:

1. AMERICAN NATIONAL STANDARD TAPER PIPE THREADS (N.P.T.) PER ANSI B2.1 - 1968

MAXIMUM WORKING PRESSURE (P.S.I.) PER MSS SP88 CLASS. CATEGORY B

SERIES	TEMPERATURE (°F)			
	150	200	250	300
424	175	150	140	125

NO.	DESCRIPTION			STD.	PART NO.	QTY.
1	BODY	CAST IRON	1 1/4" NPT	•	424 - AS	1
			1 1/2" NPT	•	424 - AS	
		CAST BRASS	1 1/4" NPT		424 - ABS	
			1 1/2" NPT		424 - ABS	
2	SEAT (SEE ASSEMBLY TOOLS BELOW)	CAST BRASS		•	424 - M	1
		CAST STN. STL.			424 - MV	
3	HEX LOCK NUT (1/4 - 28)			•	NUS - 0010	1
4	DISC PLATE	FORGED BRASS		•	424 - K	1
		STN. STL.			424 - KS	
5	O - RING	BUNA N		•	ORB - 029	1
		ETH. PROP.			ORE - 029	
		VITON			ORV - 029	
6	DISC	BUNA N		•	424 - J	1
		ETH. PROP.			424 - JE	
		VITON			424 - JV	
7	DISC HOLDER	BRASS		•	424 - H	1
		STN. STL.			424 - HS	
8	GASKET			•	200 - GQ	1
9	O - RING	BUNA N		•	ORB - 132	1
		ETH. PROP.			ORE - 132	
		VITON			ORV - 132	
10	O - RING RETAINER (SEE ASSEMBLY TOOLS BELOW)	BRASS		•	424 - G	1
		STN. STL.			242 - GS	
11	DIAPHRAGM PLATE	FORGED BRASS		•	424 - D	2
		STN. STL.			424 - DS	
12	HEX LOCK NUT (5/16 - 24)			•	NUS - 0013	1
13	CAP	CAST IRON		•	424 - C	1
		CAST BRASS			424 - CB	
14	HEX HD. CAP SCREW (1/4 - 20 X 1 1/8)			•	SC2 - 0007	4
15	DIAPHRAGM	BUNA N / NYLON		•	424 - FB	1
		VITON / NOMEX			424 - FV	
16	GASKET			•	424 - R	1
17	HEX NUT (1/4 - 28)			•	NUZ - 0008	4
18	O - RING	BUNA N		•	ORB - 118TC	1
		ETH. PROP.			ORE - 118	
		VITON			ORV - 118	
19	SHAFT			•	424 - L	1

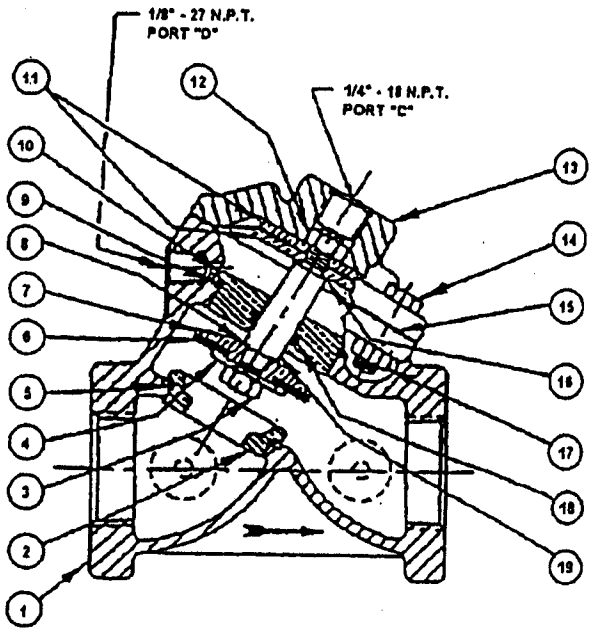

OIL STOP VALVE

(1 1/2" N.P.T.)

RN24534

ASSEMBLY TOOLS	
ITEM NO.	TOOL NO.
2	424 - MT
10	424 - GT

REPAIR PARTS KITS

DESCRIPTION	PART NO.		
	BUNA N	ETH. PROP.	VITON
DIAPHRAGM & SEALS KIT CONSISTS OF ITEM NOS. 5, 6, 8, 9, 15, 18 & 19	424 - RA	424 - RAE	424 - RAV
INTERNAL METAL PARTS KIT NORMALLY OPEN MODEL CONSISTS OF STANDARD (*) ITEM NOS. 3, 4, 7, 10, 11, 12, 19	424 - RF	424 - RFE	424 - RFG
INTERNAL METAL PARTS KIT NORMALLY CLOSED MODEL CONSISTS OF STANDARD (*) ITEM NOS. 3, 4, 7, 10, 11, 12, 15	424 - RG	424 - RGE	424 - RGV

"NORMALLY OPEN" (Power To Close) - Line Pressure / Flow Against the Valve Seating Disc Will Open The Valve. Control Pressure Applied To The Top Of The Diaphragm Will Close The Valve. (Control Pressure Should Be Applied At Port "C")

CURTIS - TOLEDO, INC
1905 Kienlen Ave.
St. Louis, MO 63133
PHONE: 314 - 383 - 1300 FAX: 314 - 381 - 1439

OIL STOP VALVE	
MACHINE: ROTARY SCREW	DRAWING: CS637A
DIAGRAM: OIL STOP VALVE	DRAWN: 8 - 9 - 95

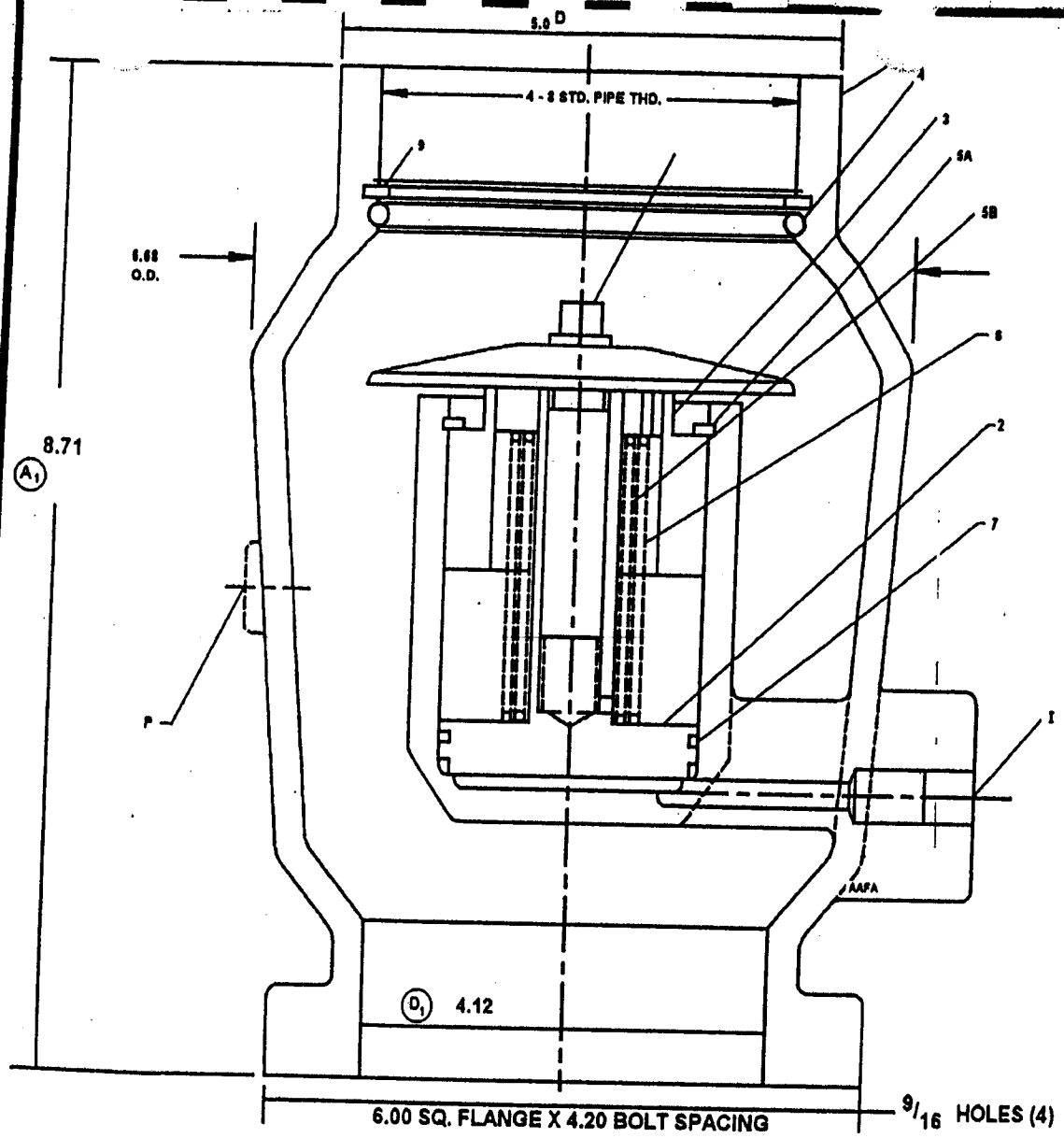

	DASH	DESCR	P/N	MAT'L
	1	CV ASSEM	927	AL, BRASS
	2	(925,929,1/4 - 28 SCKT. HD.)		& STEEL
	2	BODY	92301	C. I. OR ALUM
*	3	SEAL (O - RING)	- 346	TFE
	4	CAP	931	AL
*	5A	SPR (INT)	924	ST - PL
*	5B	SPR (EXT)	926	ST - PL
	6	PISTON	930	AL
*	7	O - RING	- 037	VITON
*	8	SPR - CV	982	S STEEL
A2 *	9	RET. RING	VH437	STEEL
	10	RET. RING	VH268	STEEL
	I	1/4 NPT REG PORT		
	P	SIDE PORT		
	EST PERF	1.0" H_2O @ 200 SCFM		
		1.6" H_2O @ 300 SCFM		
	B2	2.3" H_2O @ 400 SCFM		
		3.6" H_2O @ 500 SCFM		

B1 * SERVICE KIT 957

INLET VALVE KIT RN24575 - 2

FOR MODEL R/S 60 - D
R/S 75 - D
R/S 100 - D

REV	DATE	
D	3/31/99	1) WAS 4.00, 2) ADDED ON
C	2/2/96	ASSIGNED 9101
B	10/95	1) SERV KIT, 2)PERF DATA
		3) ADDED P/N'S
A	4/4/95	1) WAS 6.2, 2) WAS PINS

DRAWN | CHECKED | APPROVED

PART NAME: 4" INTAKE VALVE

PART NUMBER: 90117

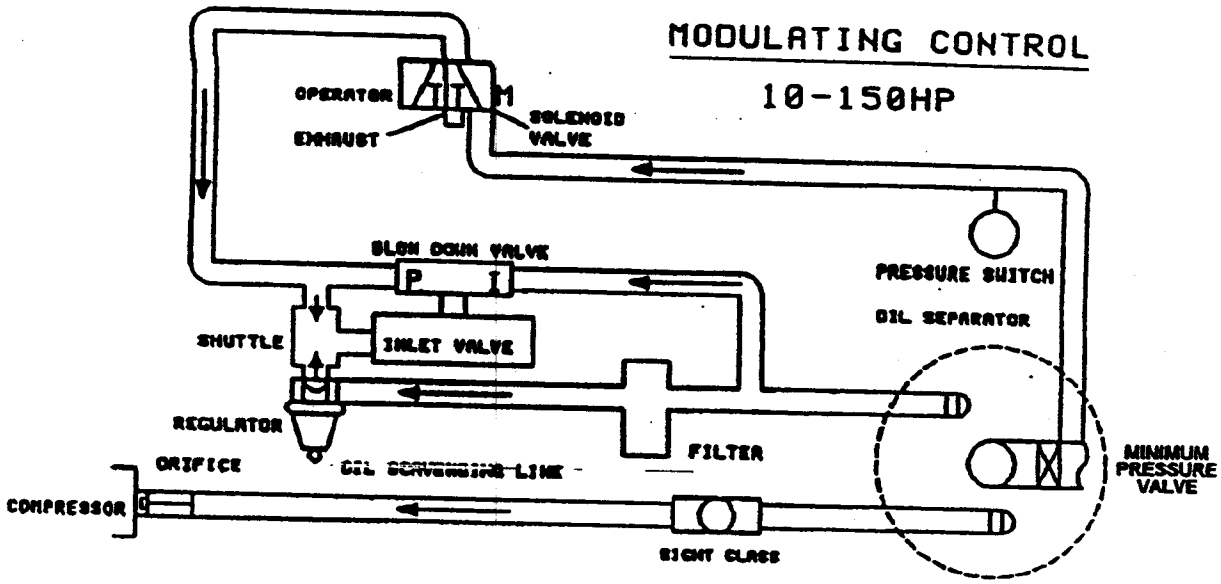

CURTIS TOLEDO

1905 Kienlen Ave.
St. Louis, MO. 63133

PHONE: 314-383-1300 FAX: 314-381-1439

ROTARY SCREN MODULATING CONTROL	
MACHINE: ROTARY SCREN	DRAWING: CS630
DIAGRAM: MOD. CONTROL	DRAWN: 8-14-95

LOW TORQUE START

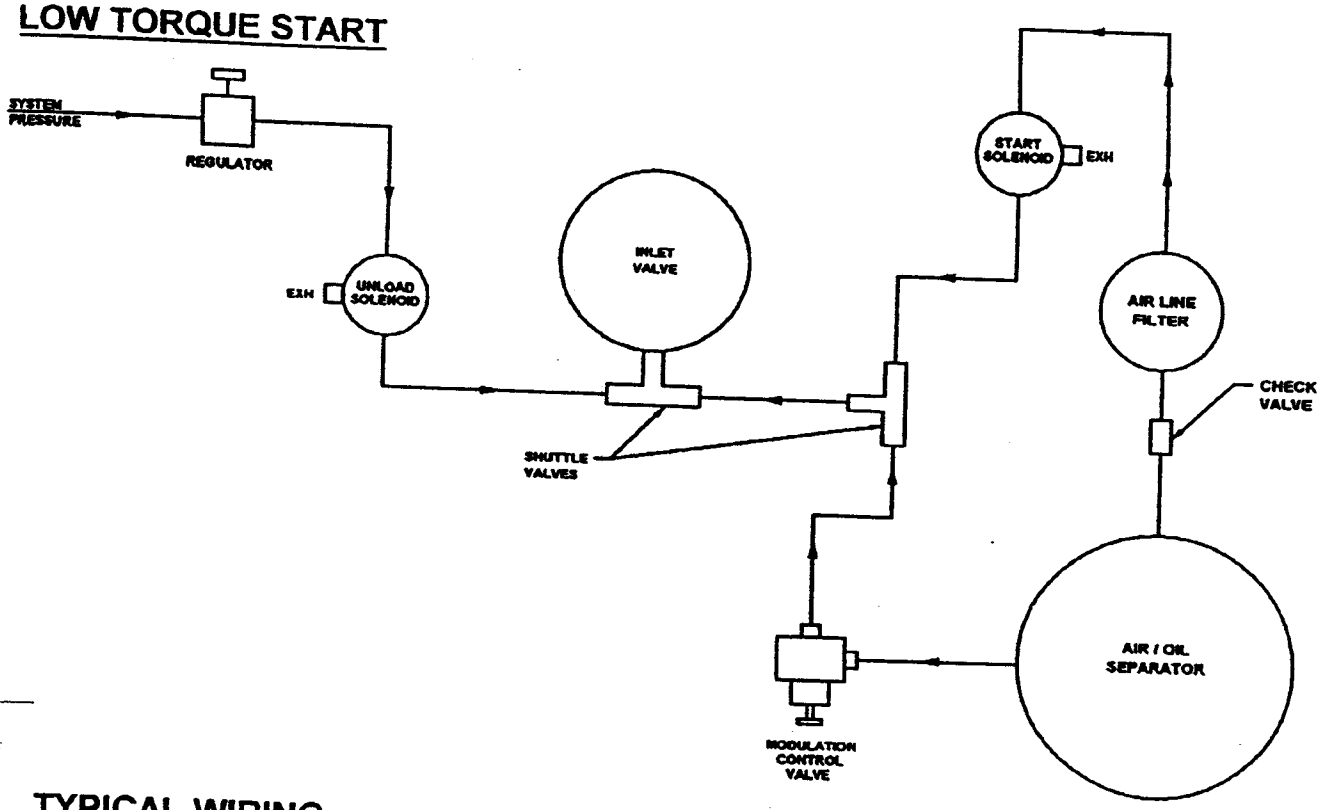

TYPICAL WIRING

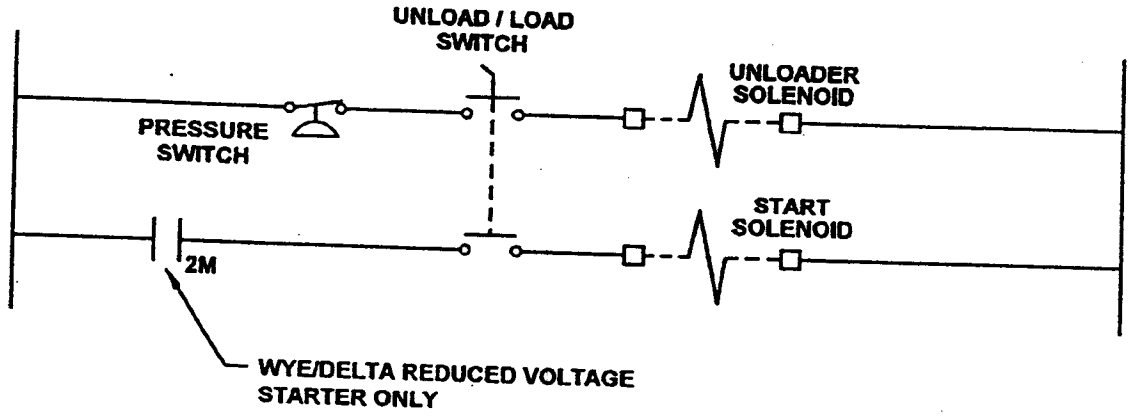

R/S 50 - 200 D

DATE	ECN	SYM	DESCRIPTION
2 - 98	6937	—	NEW RELEASE

TITLE:	SCALE:	CHECKED BY:	DRAWN BY:	PART NUMBER:
LAYOUT DIAGRAM AND WIRING SCHEMATIC FOR WYE / DELTA LOW TORQUE START	NONE		JAL	CS856

CURTIS TOLEDO

115 V CONTROL WIRING SCHEMATIC

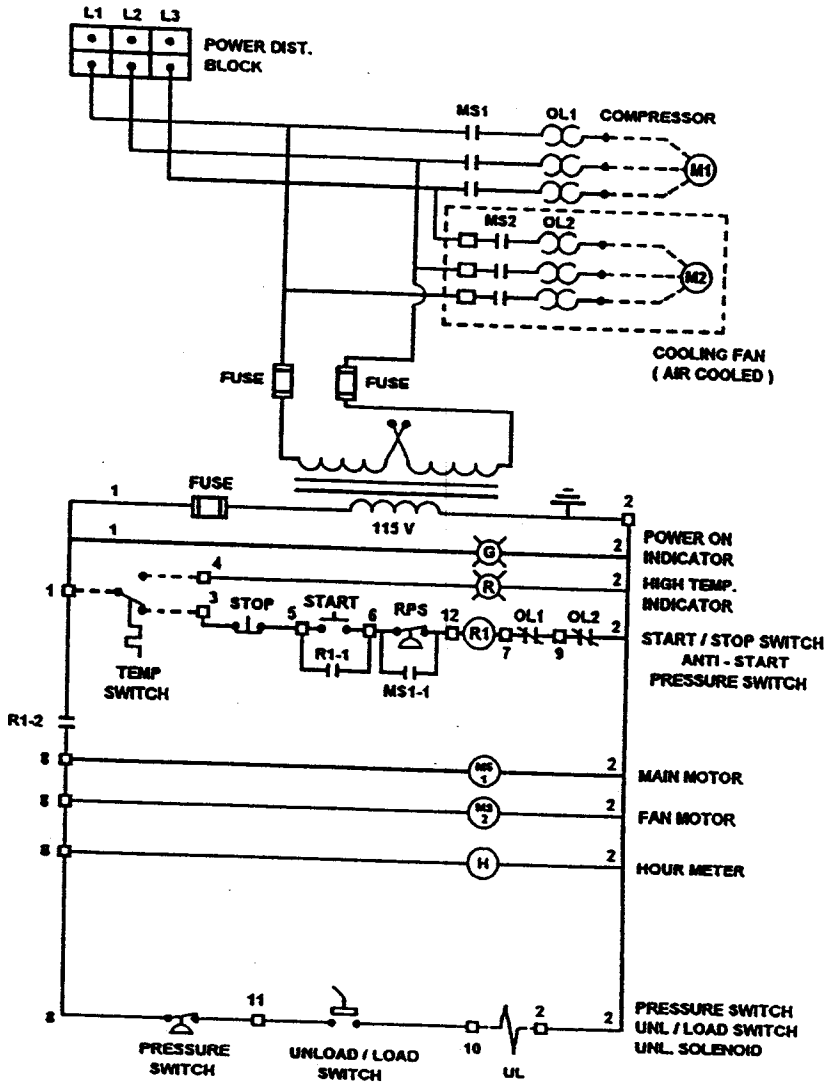

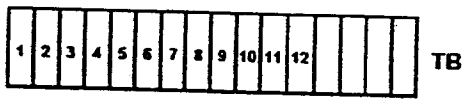

CURTIS - TOLEDO, INC

1905 Kienlen Ave.
St. Louis, MO 63133

PHONE: 314 - 383 - 1300 FAX: 314 - 381 - 1439

CONTROL SCHEMATIC R/S50 - D THRU R/S200 - D	
MACHINE: ROTARY SCREW	DRAWING: CS638
DIAGRAM: SCHEMATIC	DRAWN: 2 - 16 - 96

CURTIS TOLEDO

115 V CONTROL WIRING SCHEMATIC

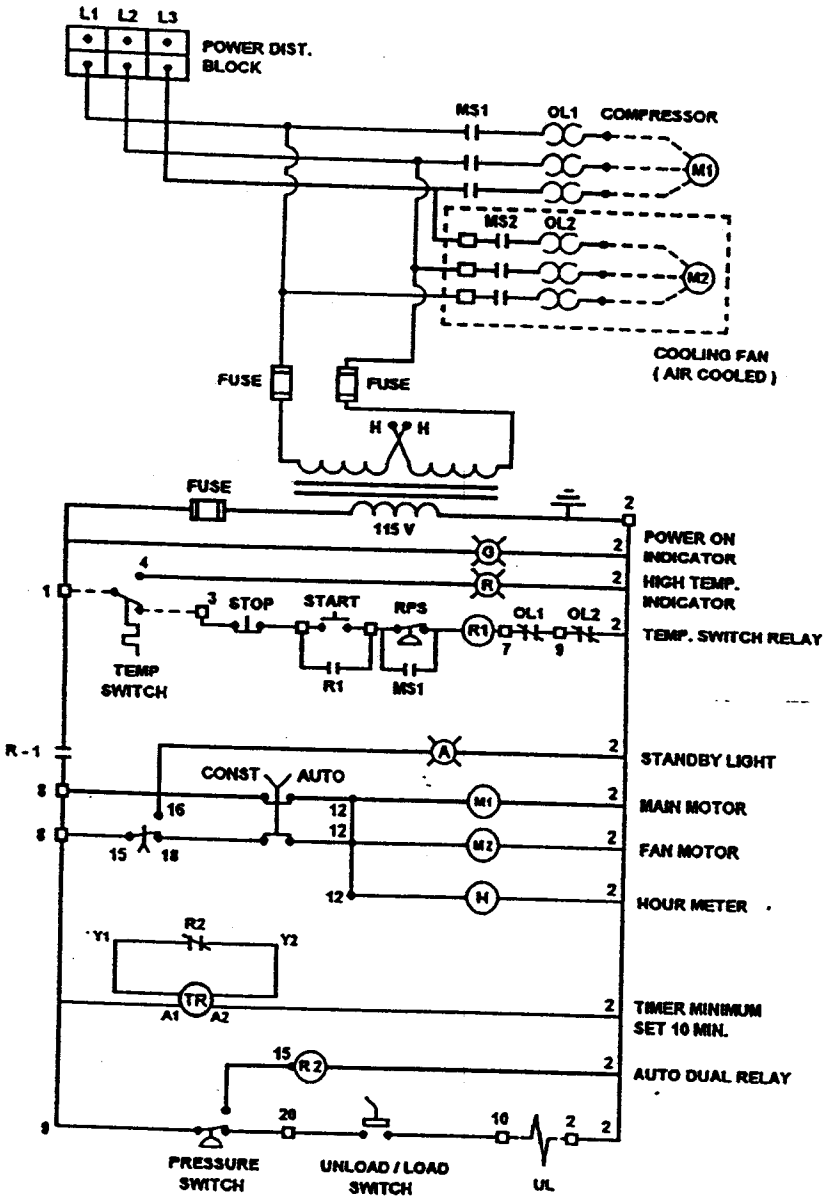

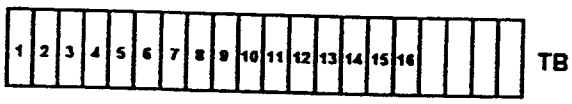

CURTIS - TOLEDO, INC

1906 Kienlen Ave.
St. Louis, MO 63133

PHONE: 314 - 383 - 1300 FAX: 314 - 381 - 1439

AUTO DUAL CONTROL 50 - 150	
MACHINE: ROTARY SCREW	DRAWING: CS639
DIAGRAM: SCHEMATIC	DRAWN: 2 - 16 - 96

COUPLINGS TYPE S

'stallation Instructions

S-Flex flanges (hubs) and elastomeric sleeves come in many sizes and types. First, determine the size and type of components being used. Remove all components from their boxes and loosely assemble the coupling on any convenient surface. (Do not attempt to install the wire ring on the two-piece E or N sleeve at this time.) Also check maximum RPM values in Table 2 against operating speed. All rubber sleeves (EPDM, and Neoprene) have the same ratings for a given size and may be used interchangeably.

1 Inspect all coupling components and remove any protective coatings or lubricants from bores, mating surfaces, and fasteners. Remove any existing burrs, etc. from the shafts.

2 Slide one coupling flange onto each shaft, using keys where required. Keys should fit snugly. With the Model B flange (with OD bushing) It may be necessary to expand the bore of the bushing by wedging a screwdriver into saw cut of the bushing bore.

Position the flanges on the shafts to approximately achieve the X, dimension shown In Table 2. It is usually best to have an equal length of shaft extending into each flange. Tighten one flange in its final position. If possible, slide the other flange far enough away to install sleeve. If flange cannot be slid back, or if "blind" assembly, tighten second flange on shaft and bring equipment together. Tighten setscrews or bushing cap screws to the appropriate value shown In Table 1. With a two-piece sleeve, do not move the wire ring to Its final position. Allow It to hang loosely In the groove adjacent to the teeth until completing alignment (5) and (6).

4 Check parallel alignment by placing a straightedge across the two coupling flanges and measuring the maximum offset at various points around the periphery of the coupling without rotating the coupling. If the maximum offset exceeds the figure shown under "Parallel" In Table 2, realign the shafts.

Check angular alignment with ·ometer, vernier, or caliper. Refer to X and $X_{(max)}$ dimensions in Table 2. Measure from the outside of one flange to the outside of the other at intervals around

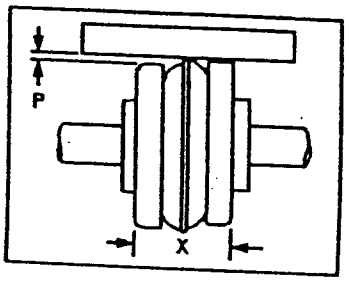

PARALLEL

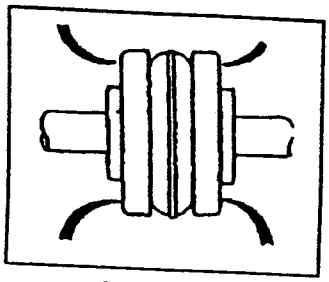

ANGULAR

the periphery of the coupling. Determine the maximum and minimum dimensions without totaling the coupling. These measurements must be within the range of X, and $X_{(max)}$. If a correction is necessary, be sure to recheck the parallel alignment.

6 If the coupling employs the two-piece sleeve with the wire ring, force the ring into its groove in the center of the sleeve. It may be necessary to pry the ring into position with a blunt screwdriver.

7 Install coupling guards per OSHA or ASME B15.1 requirements.

CAUTION, Coupling sleeves may be thrown from the couplings assembly with substantial force when the coupling is subjected to a severe shock load or abuse.

NOTE. Any coupling and connected equipment Will normally operate longer and more economically when the coupling is carefully aligned.

Table 1: Fastener Torque Values (Ft. - Lbs.)

Coupling Size	Type J 2 SS at 90	Type J SS Size	Type S 2 SS at 90	Types S & SC SS * Size	Type SC 2 SS at 90° in Hub ***	Type B 3 Hex Hd Cap Screw	Type B Cap Scr** Size	OD Size	Type SC 4 Hex Hd Cap Screw Flanges / Hub	Type SCH Cap Screw Size	Type SCHS Cap Screw Size
3	7	1/4 - 20	—	—	—	—	—	—	—	—	—
4	7	1/4 - 20	—	—	—	—	—	—	—	—	—
5	7	1/4 - 20	7	1/4 - 20	7	—	—	—	—	—	—
6	13	5/16 - 18	13	5/16 - 18	13	5	10 - 24 x 1	JA	4	10 - 24 x 1 1/2	—
7	—	—	23	3/8 - 16	23	5	10 - 24 x 1	JA	9	1/4 - 20 x 1 3/4	—
8	—	—	23	3/8 - 16	23	25	1/4 - 20 x 1 3/8	SH	9	1/4 - 20 x 1 7/8	—
9	—	—	50	1/2 - 13	50	9	1/4 - 20 x 1 7/8	SD	18	5/8 - 18 x 2 1/4	—
10	—	—	50	1/2 - 13	50	15	5/16 - 18 x 2	SK	31	3/8 - 16 x 2 3/4	3/8 - 16 x 2 1/4
11	—	—	50	1/2 - 13	50	30	3/8 - 16 x 2	SF	50	7/16 - 14 x 3 1/4	7/16 - 14 x 2 1/2
12	—	—	50	1/2 - 13	50	60	1/2 - 13 x 2 3/4	E	75	1/2 - 13 x 3 1/2	1/2 - 13 x 2 3/4
13	—	—	100	5/8 - 11	100	75	5/16 - 12 x 3 5/8	F	150	5/8 - 11 x 4	5/8 - 11 x 3 1/2
14	—	—	100	5/8 - 11	100	75	5/16 - 12 x 3 5/8	F	150	5/8 - 11 x 4 3/4	5/8 - 11 x 3 1/2
16	—	—	100	5/8 - 11	—	135	5/8 - 11 x 4 1/2	J	150	5/8 - 11 x 5	—
									—	—	—

* Supplied as standard with vibration resistant nylon patch setscrews.
** Capscrews supplied with split - lock washers.
*** Use hub torque values when hub size differs from flange size.

Table 2: Maximum RPM and Allowable Misalingnment (Inches)

Sleeve Size	Maximum RPM	Types JE, JN, E & N Parallel	Types JE, JN, E & N Angular *	EPDM X	EPDM $X_{(max)}$	Type H Hytrel Parallel	Type H Hytrel Angular *	Type H Hytrel X
3	9200	0.010	0.035	1.188	1.223	—	—	—
4	7600	0.010	0.043	1.500	1.543	—	—	—
5	7600	0.015	0.056	1.838	1.994	—	—	—
6	6000	0.015	0.070	2.438	2.508	0.010	0.016	2.500
7	5250	0.020	0.081	2.563	2.644	0.012	0.020	2.625
8	4500	0.020	0.094	2.938	3.032	0.015	0.025	3.000
9	3750	0.025	0.108	3.500	3.609	0.017	0.028	3.562
10	3400	0.025	0.128	4.063	4.191	0.020	0.032	4.125
11	3000	0.032	0.151	4.875	5.026	0.022	0.037	4.938
12	2800	0.032	0.175	5.688	5.863	0.025	0.042	5.750
13	2400	0.040	0.185	6.625	6.820	0.030	0.050	6.688
14	2200	0.045	0.242	7.750	7.992	0.035	0.060	7.812
16	1500	0.062	0.330	10.250	10.580	—	—	—

NOTE: Values shown above apply if actual torque transmitted is more than 1/2 the coupling rating.
For lesser torque, reduce the above values by 1/2.
Typical factors such as environment, loading, misalignment, balance & types of connected equipment influence very high speed (RPM) limits. Please contact LOVEJOY Engineering for assistance.
* $X_{(max)}$ minus X equals misalignment allowance.

DIMENSIONS

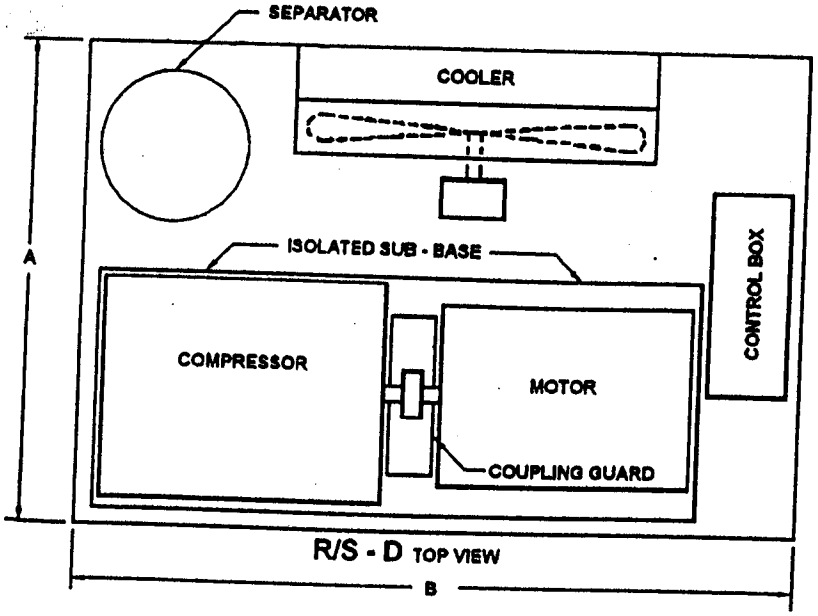

R/S - D TOP VIEW

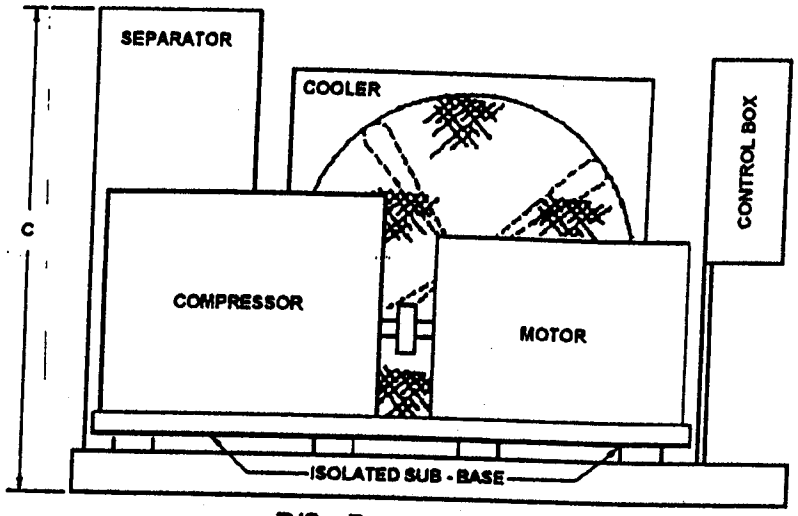

R/S - D FRONT VIEW

Standard Equipment

1. Dry Type Inlet Filter / Silencer
2. Oil Filter
3. Motor / Compressor Drive Coupling
4. Drive Guard
5. Multi Stage Oil Separator Unit
6. ODP Motor, 60 HZ, 1.15 SF
7. Safety Valve
8. Pressure Gauge
9. Temperature Gauge
10. Oil Cooler
11. Nema 1 Control
12. 115 Volt Control Transformer
13. Separate Fan Motor and Starter on Air Cooled
14. Hourmeter
15. High Temperature Shut Down Switch with Light
16. Oil Level Sight Glass
17. Start - Stop Push Buttons
18. Modulating Control
19. Water Temperature Control Valve and on Water Cooled Units
20. Minimum Pressure Valve
21. Factory Fill Lubricants
22. Thermostatic Oil Valve
23. Low Unloaded H.P. Blow Down System
24. Steel Base with Isolated Motor / Compressor Base

R/S - D	A	B	C	WT. ENCL.	WT. LESS ENCL.	HP	CFM / PSI *				AIR OUT
MODEL	IN.	IN.	IN.	LBS.	LBS.	—	100	125	150	175	NPT
R/S50 - D	42	72	44	2130	1925	50	240	222	195	165	1 1/2"
R/S60 - D	48	76	60	2570	2170	60	280	275	236	212	1 1/2"
R/S75 -D	54	84	60	3140	2690	75	365	329	305	270	2"
R/S100 - D	54	84	60	3400	2950	100	465	458	363	340	2"
R/S125 - D	66	84	64	5320	4520	125	600	570	516	440	2"
R/S150 - D	66	84	64	5550	4750	150	760	706	583	546	2"
R/S200 - D	70	90	64	5850	5150	200	960	860	770	680	2 1/2"

ENGINEERING DATA

CURTIS TOLEDO, INC,

1905 Kienlen Ave.
St. Louis, MO. 63133

MODEL	R/S-D 50	R/S-D 60	R/S-D 75	R/S-D 100	R/S-D 125	R/S-D 150	R/S-D 200
OIL (GAL) CAPACITY	8	15	15	15	25	25	40
AIR (IN.) CONNECTION	1 1/2	1 1/2	2	2	2	2	2 1/2
OIL GPM	20	25	28	32	46	50	55
MOTOR RPM	1750	3500	1750	3500	1750	1750	1750*
BTU/M OIL COOLER	2000	2100	2900	3850	4900	5860	7500
BTU/M AFTER COOLER	300	400	550	750	915	1100	1500
COOLING FAN - CFM	8000	9500	12500	16000	18000	22500	22500

SUBJECT TO CHANGE WITHOUT NOTICE
*** MOTOR RPM 3500 ON NON-GEARED MODEL**

REV - E 08/04/97

PROCEDURE FOR LONG TERM STORAGE OF COMPRESSOR

CURTIS Air Compressors recommends that the following procedure be used before storing any rotary screw compressor.

1) Run compressor to achieve normal operating temperature for 10 minutes.

2) Drain old oil and replace all filters. Moisture may be emulsified in the old oil.

3) Replace oil with DuBois Chemicals MPO -10 or equivalent polymer oil

4) Replace all filters

5) Run compressor to achieve normal operating temperature for 10 minutes.

6) Shutdown and purge air from system.

7) Disconnect compressor from piping and plug all openings with appropriate NPT plugs, Teflon taped.

8) Cover air inlet with 6 mil plastic and tape in place.

9) Pull main power supply and disconnect power from machine.

10) Cover entire compressor with 6 mil plastic and secure in place.

CURTIS - TOLEDO
MAINTENANCE SCHEDULE

DAILY

1. Observe oil level - Maintain at 1/3 level in sight tube do not overfill - center is maximum level.
2. Observe oil scavenger return line for oil flow.
3. Drain condensate separator.

WEEKLY

1. Inspect air inlet filter element..
2. Check heat exchangers for cleanliness.
3. Check for loose fittings and fasteners.
4. Drain air receiver.
5. Drain condensate from oil sump.

INITIAL - 100 HOURS OR 30 DAYS

1. Change oil filter element.

1000 HOURS OR SIX MONTHS

1. Change oil filter element.
2. Inspect air filter element.
3. Perform daily and weekly maintenance.
4. Take oil sample if applicable.

0 HOURS

RS / 8000 oil
V0414

1. Clean oil scavenger line orifice.
2. Clean blow down line orifice.
3. Observe unit for proper load/unload cycle.
4. Perform daily and weekly maintenance..
5. Check electrical connection.
6. Observe overall condition of unit - clean if necessary.
7. Change oil *
8. Change oil filter element.
9. Change air filter element.

* Oil change interval can be lengthened when using synthetic lubricant to 8000 hours or 1 year.
Maintenance schedule should be reduced by half if operating at 200 F, or in dirty ambients, or with frequent cold starts.

4000 HOURS OR 1 YEAR

1. Change oil/air separator element.
2. Check coupling alignment.
3. Perform daily and weekly maintenance.

SPARE PARTS KITS

4,000 HOUR KIT

R/S 50-D LOT NO. 01 - 03	VGC565	(1) SEPARATOR ELEMENT (4) OIL FILTER ELEMENTS (2) AIR FILTER ELEMENTS	RN27518 RN28204 VA1144
★ R/S 50-D LOT NO. 04 - 09	VGC515	(1) SEPARATOR ELEMENT (4) OIL FILTER ELEMENTS (2) AIR FILTER ELEMENTS	RN27518 RN28204 RN24040-1
R/S 50-AD LOT NO. 01 - 03	VGC566	(1) SEPARATOR ELEMENT (4) OIL FILTER ELEMENTS (2) AIR FILTER ELEMENTS	RN27518 RN28201 VA1144
R/S 50-AD LOT NO. 04 - 08	VGA595	(1) SEPARATOR ELEMENT (4) OIL FILTER ELEMENTS (2) AIR FILTER ELEMENTS	RN27518 RN28201 VA1144
R/S 60-D LOT NO. 01 - 03	VGC567	(1) SEPARATOR ELEMENT (4) OIL FILTER ELEMENTS (2) AIR FILTER ELEMENTS	RN27523 RN28204 VA1144
R/S 60-D LOT NO. 04 - 07	VGB517	(1) SEPARATOR ELEMENT (4) OIL FILTER ELEMENTS (2) AIR FILTER ELEMENTS	RN27523 RN28204 RN24040-1
R/S 60-D LOT NO. 08	VGC554	(1) SEPARATOR ELEMENT (4) OIL FILTER ELEMENTS (2) AIR FILTER ELEMENTS	RN27526 RN28204 RN24040-1
R/S 75-D LOT NO. 01 - 03	VGC568	(1) SEPARATOR ELEMENT (4) OIL FILTER ELEMENTS (2) AIR FILTER ELEMENTS	RN27523 RN28204 RN24040-1
R/S 75-D LOT NO. 04 - 07	VGC569	(1) SEPARATOR ELEMENT (4) OIL FILTER ELEMENTS (2) AIR FILTER ELEMENTS	RN27523 RN28204 RN24040-1
R/S 75-D LOT NO. 08	VGB518	(1) SEPARATOR ELEMENT (4) OIL FILTER ELEMENTS (2) AIR FILTER ELEMENTS	RN27530 RN28204 RN24040-1
R/S 75-D LOT NO. 09	VGC555	(1) SEPARATOR ELEMENT (4) OIL FILTER ELEMENTS (2) AIR FILTER ELEMENTS	RN27526 RN28204 RN24040-1
R/S 100-D LOT NO. 01 - 03	VGC570	(1) SEPARATOR ELEMENT (4) OIL FILTER ELEMENTS (2) AIR FILTER ELEMENTS	RN27530 RN28204 RN24040-1
R/S 100-D LOT NO. 04 - 08	VGB518	(1) SEPARATOR ELEMENT (4) OIL FILTER ELEMENTS (2) AIR FILTER ELEMENTS	RN27530 RN28204 RN24040-1
R/S 100-D LOT NO. 09	VGC556	(1) SEPARATOR ELEMENT (4) OIL FILTER ELEMENTS (2) AIR FILTER ELEMENTS	RN27530 RN28205 RN24040-1

4,000 HOUR KIT (CONT'D)

'S 100-D)T NO. 10	VGC557	(1) (4) (2)	SEPARATOR ELEMENT OIL FILTER ELEMENTS AIR FILTER ELEMENTS	RN27526 RN28205 RN24040-1
R/S 125-D R/S 150-D LOT NO. 01 - 03	VGB520	(1) (4) (2)	SEPARATOR ELEMENT OIL FILTER ELEMENTS AIR FILTER ELEMENTS	RN27530 RN28204 RN24050-1
R/S 125-D R/S 150-D LOT NO. 04 - 06	VGC571	(1) (4) (2)	SEPARATOR ELEMENT OIL FILTER ELEMENTS AIR FILTER ELEMENTS	RN27530 RN28205 RN24060-1
R/S 125-D R/S 150-D LOT NO. 07 - 08	VGC516	(1) (4) (2)	SEPARATOR ELEMENT OIL FILTER ELEMENTS AIR FILTER ELEMENTS	RN27527 RN28205 RN24060-1
R/S 125-D R/S 150-D LOT NO. 09 (STD.)	VGC545	(1) (4) (2) (2)	SEPARATOR ELEMENT OIL FILTER ELEMENTS HD MAIN FILTER ELEMENTS HD SAFETY ELEMENTS	RN27527 RN28205 RN24084-1 RN24084-2
R/S 200-D LOT NO. 01 - 02	VGC517	(1) (8) (2)	SEPARATOR ELEMENT OIL FILTER ELEMENTS AIR FILTER ELEMENTS	RN27535 RN28205 RN24062-1
R/S 200-D ᐤT NO. 03 D.)	VGC546	(1) (8) (2) (2)	SEPARATOR ELEMENT OIL FILTER ELEMENTS HD MAIN FILTER ELEMENTS HD SAFETY ELEMENTS	RN27535 RN28205 RN24086-1 RN24086-2

4,000 HOUR KIT (UNITS WITH HEAVY DUTY AIR INLET FILTERS)

R/S 50-D	VGC542	(1) (4) (2) (2)	SEPARATOR ELEMENT OIL FILTER ELEMENTS HD MAIN FILTER ELEMENTS HD SAFETY ELEMENTS	RN27518 RN28204 RN24079-1 RN24079-2
R/S 50-AD	VGC540	(1) (4) (2) (2)	SEPARATOR ELEMENT OIL FILTER ELEMENTS HD MAIN FILTER ELEMENTS HD SAFETY ELEMENTS	RN27518 RN28201 RN24076-1 RN24076-2
R/S 60-D R/S 75-D	VGC543	(1) (4) (2) (2)	SEPARATOR ELEMENT OIL FILTER ELEMENTS HD MAIN FILTER ELEMENTS HD SAFETY ELEMENTS	RN27526 RN28204 RN24079-1 RN24079-2
R/S 100-D	VGC544	(1) (4) (2) (2)	SEPARATOR ELEMENT OIL FILTER ELEMENTS HD MAIN FILTER ELEMENTS HD SAFETY ELEMENTS	RN27526 RN28205 RN24082-1 RN24082-2
R/S 125-D 150-D T NO. 01 - 08 (OPTIONAL)	VGC545	(1) (4) (2) (2)	SEPARATOR ELEMENT OIL FILTER ELEMENTS HD MAIN FILTER ELEMENTS HD SAFETY ELEMENTS	RN27527 RN28205 RN24084-1 RN24084-2

4,000 HOUR KIT (CONT'D)

(UNITS WITH HEAVY DUTY AIR INLET FILTERS)

R/S 200-D LOT NO. 01 - 02 (OPTIONAL)	VGC546	(1) SEPARATOR ELEMENT (8) OIL FILTER ELEMENTS (2) HD MAIN FILTER ELEMENTS (2) HD SAFETY ELEMENTS	RN27535 RN28205 RN24086-1 RN24086-2

8,000 HOUR KIT

R/S 50-D	VGC518	(2) SEPARATOR ELEMENT (8) OIL FILTER ELEMENTS (4) AIR FILTER ELEMENTS	RN27518 RN28204 RN24040-1
R/S 50-AD	VGB522	(2) SEPARATOR ELEMENT (8) OIL FILTER ELEMENTS (4) AIR FILTER ELEMENTS	RN27518 RN28201 VA1144
R/S 60-D R/S 75-D	VGB523	(2) SEPARATOR ELEMENT (8) OIL FILTER ELEMENTS (4) AIR FILTER ELEMENTS	RN27526 RN28204 RN24040-1
R/S 100-D	VGB524	(2) SEPARATOR ELEMENT (8) OIL FILTER ELEMENTS (4) AIR FILTER ELEMENTS	RN27526 RN28205 RN24040-1
R/S 125-D LOT NO. 01 -03	VGB525	(2) SEPARATOR ELEMENT (8) OIL FILTER ELEMENTS (4) AIR FILTER ELEMENTS	RN27530 RN28204 RN24040-1
R/S 150-D LOT NO. 04 - 06	VGB526	(2) SEPARATOR ELEMENT (8) OIL FILTER ELEMENTS (4) AIR FILTER ELEMENTS	RN27530 RN28204 RN24050-1
R/S 125-D R/S 150-D LOT NO. 07 - 08	VGC519	(2) SEPARATOR ELEMENT (8) OIL FILTER ELEMENTS (4) AIR FILTER ELEMENTS	RN27527 RN28205 RN24060-1
R/S 125-D R/S 150-D LOT NO. 09	VGC591	(1) SEPARATOR ELEMENT (4) OIL FILTER ELEMENTS (2) HD MAIN FILTER ELEMENTS (2) HD SAFETY ELEMENTS (1) INLET VALVE KIT	RN27527 RN28205 RN24084-1 RN24084-2 RN24579-2
R/S 200-D LOT NO. 01 - 02	VGC520	(1) SEPARATOR ELEMENT (16) OIL FILTER ELEMENTS (4) AIR FILTER ELEMENTS	RN27535 RN28205 RN24062-1
R/S 200-D LOT NO. 03	VGC592	(1) SEPARATOR ELEMENT (16) OIL FILTER ELEMENTS (2) HD MAIN FILTER ELEMENTS (2) HD SAFETY ELEMENTS	RN27535 RN28205 RN24086-1 RN24086-2

12,000 HOUR KIT

R/S 50-D	VGC521	(3) SEPARATOR ELEMENTS	RN27518
		(12) OIL FILTER ELEMENTS	RN28204
		(6) AIR FILTER ELEMENTS	RN24040-1
		(1) INLET VALVE KIT	RN24575-2
		(1) THERMO MIXING VALVE KIT	RN42400-1
		(1) MINIMUM PRESSURE VALVE KIT	RN42128-1
		(1) COUPLING ELEMENT	RN14511-2
R/S 50-AD	VGC522	(3) SEPARATOR ELEMENTS	RN27518
		(12) OIL FILTER ELEMENTS	RN28201
		(6) AIR FILTER ELEMENTS	VA1144
		(1) INLET VALVE KIT	RN24570-2
		(1) THERMO MIXING VALVE KIT	RN42400-1
		(1) MINIMUM PRESSURE VALVE KIT	RN42128-1
		(1) COUPLING ELEMENT	RN14511-2
R/S 60-D	VGC523	(3) SEPARATOR ELEMENTS	RN27526
		(12) OIL FILTER ELEMENTS	RN28204
		(6) AIR FILTER ELEMENTS	RN24040-1
		(1) INLET VALVE KIT	RN24575-2
		(1) THERMO MIXING VALVE KIT	RN42400-1
		(1) MINIMUM PRESSURE VALVE KIT	RN42128-1
		(1) COUPLING ELEMENT	RN14511-2
R/S 75-D	VGC589	(3) SEPARATOR ELEMENTS	RN27526
		(12) OIL FILTER ELEMENTS	RN28204
		(6) AIR FILTER ELEMENTS	RN24040-1
		(1) INLET VALVE KIT	RN24575-2
		(1) THERMO MIXING VALVE KIT	RN42400-1
		(1) MINIMUM PRESSURE VALVE KIT	RN42128-1
		(1) COUPLING ELEMENT	RN14512-1
R/S 100-D	VGB531	(3) SEPARATOR ELEMENTS	RN27526
		(12) OIL FILTER ELEMENTS	RN28205
		(6) AIR FILTER ELEMENTS	RN24040-1
		(1) INLET VALVE KIT	RN24575-2
		(1) THERMO MIXING VALVE KIT	RN42400-1
		(1) MINIMUM PRESSURE VALVE KIT	RN42130-1
		(1) COUPLING ELEMENT	RN14512-1
R/S 125-D R/S 150-D LOT NO. 01 - 03	VGB532	(3) SEPARATOR ELEMENTS	RN27530
		(12) OIL FILTER ELEMENTS	RN28204
		(6) AIR FILTER ELEMENTS	RN24040-1
		* (1) INLET VALVE KIT	RN24560
		(1) THERMO MIXING VALVE KIT	RN42400-1
		(1) MINIMUM PRESSURE VALVE KIT	RN42130-1
* (AQUAMATIC VALVE)		(1) COUPLING ELEMENT	RN14514-1
R/S 125-D R/S 150-D LOT NO. 04 - 06	VGB533	(3) SEPARATOR ELEMENTS	RN27530
		(12) OIL FILTER ELEMENTS	RN28204
		(6) AIR FILTER ELEMENTS	RN24050-1
		* (1) INLET VALVE KIT	RN24579-2
		(1) THERMO MIXING VALVE KIT	RN42420-1
		(1) MINIMUM PRESSURE VALVE KIT	RN42130-1
(AIR-CON INLET VALVE)		(1) COUPLING ELEMENT	RN14514-1

R/S 125-D R/S 150-D LOT NO. 07 - 08	VGC524	(3)	SEPARATOR ELEMENTS	RN27527
		(12)	OIL FILTER ELEMENTS	RN28205
		(6)	AIR FILTER ELEMENTS	RN24060-1
		(1)	INLET VALVE KIT	RN24579-2
		(1)	THERMO MIXING VALVE KIT	RN42420-1
		(1)	MINIMUM PRESSURE VALVE KIT	RN42130-1
		(1)	COUPLING ELEMENT	RN14514-1
R/S 125-D R/S 150-D LOT NO. 09	VGC593	(3)	SEPARATOR ELEMENTS	RN27527
		(12)	OIL FILTER ELEMENTS	RN28205
		(6)	HD MAIN FILTER ELEMENTS	RN24084-1
		(6)	HD MAIN FILTER ELEMENTS	RN24084-2
		(1)	INLET VALVE KIT	RN24579-2
		(1)	THERMO MIXING VALVE KIT	RN42420-1
		(1)	MINIMUM PRESSURE VALVE KIT	RN42130-1
		(1)	COUPLING ELEMENT	RN14514-1
R/S 200-D LOT NO. O1 - 02	VGC525	(3)	SEPARATOR ELEMENTS	RN27535
		(24)	OIL FILTER ELEMENTS	RN28205
		(6)	AIR FILTER ELEMENTS	RN24060-1
		(1)	INLET VALVE KIT	RN24579-2
		(1)	THERMO MIXING VALVE KIT	RN42420-1
		(1)	MINIMUM PRESSURE VALVE KIT	RN42130-1
		(1)	COUPLING ELEMENT	RN14514-2
R/S 200-D LOT NO. 03	VGC594	(3)	SEPARATOR ELEMENTS	RN27535
		(24)	OIL FILTER ELEMENTS	RN28205
		(6)	HD MAIN FILTER ELEMENTS	RN24079-1
		(6)	HD MAIN FILTER ELEMENTS	RN24079-2
		(1)	INLET VALVE KIT	RN24579-2
		(1)	THERMO MIXING VALVE KIT	RN42420-1
		(1)	MINIMUM PRESSURE VALVE KIT	RN42130-1
		(1)	COUPLING ELEMENT	RN14518-1

COMPRESSOR MAINTENANCE LOG

MODEL____________________ SERIAL NUMBER____________________

REFER TO THE COMPRESSOR INSTRUCTION MANUAL FOR COMPLETE MAINTENANCE INFORMATION AND SCHEDULE. THE COMPRESSOR INSTRUMENT PANEL LISTS A BRIEF MAINTENANCE OUTLINE

DO NOT REMOVE LOG FROM THIS UNIT

Record date in Date Column and hourmeter reading in the column under each item on which maintenance is performed. Record pressure differential gauge readings when any other maintenance is performed to provide running record of approaching oil filter of separator change.

DATE	AIR FILTER		PRESSURE DROP		OIL FILTER CHANGED	OIL CHANGED	OIL SEPARATOR CHANGED	OIL COOLER CLEANED	
	CLEANED	CHANGED	OIL FILTER	OIL SEPARATOR				RADIATOR CORE	HEAT EXCHANGER TUBES

CURTIS EAST — BOMLIST RM5253 - R/S500 230VOLT 100 PSI 30 MAR 2000 PAGE 1

SIN 6927 D00015

LIN	PART#	DESCRIPTION	QTY
0	RM5253	R/S500	
1	BUSH6	BUSHING-45MM X 2 1/8	1
2	CS700	COOLER SUPPORT - LEFT 40/50	1
3	CS701	COOLER SUPPORT - RIGHT 40/50	1
4	CS717-1	BRACKET, OIL FILTER R/S500	1
5	CS741	CAP-SIGHT GLASS ASSY	1
6	CS793	THUMB SCREW	1
7	CY360	KIT, LABEL R/S50	1
8	OFE949	TUBE SEP TO MIN PSI 40-50	1
9	OFE959	TUBE 3/4" OD	1
10	OFE960	TUBE 3/4" OD	1
11	OFE963	TUBE SCAV SEP TO SIGHT	1
12	OFE981	TUBE, AIR END TO SEP 50D, AD	1
13	OFE982	TUBE MPV TO COOLER 50D	1
14	OFE983	TUBE BY-PASS TO SEP 50D	1
15	RN10103-5	SUB BASE 20X48 R/S500	1
16	RN10116-6	BASE 42X72 R/S500	1
17	RN10120-8	FAN MOUNT R/S40-50	1
18	RN10135-3	MOTOR SHIM R/S500	1
19	RN10139	MOTOR MOUNT R/S500	4
20	RN10140	CROSS-SEP TANK 15-50	2
21	RN10222-2	TANK-OIL SEP 14 X 30	1
22	RN10340-3	GUARD COUPLING 100 ROT	1
23	RN10456	GUARD-FAN 24" RD WIRE	1
24	RN10456-1	FAN COVER 50 SS	1
25	RN10616	FITTING BUCKHEAD 1/4"	1
26	RN10676-4	FLG 2" NPT E25 W/O-RING GROOVE	1
27	RN10676-5	O-RING	1
28	RN10677-2	FLG SAE 16 OIL INJ E25	1
29	RN10677-1	"O" RING	1
30	RN14511-1	COUPLING ELEMENT #10 E-SLV	1
31	RN14519-2	S FLEX 10 FLANGE 2 1/8	1
32	RN14519-5	S-FLEX 10 FLANGE 45MM	1
33	RN18104-7	SWITCH 2-POSITION UNL/LOAD	1
34	RN18104-8	LABEL UNLOAD/LOAD	1
35	RN18104-9	SWITCH-2 POSITION CONST/AUTO	1
36	RN18116	SWITCH-START	1
37	RN18118-2	SWITCH STOP/RESET	1
38	RN18136	SWITCH PRESSURE 30-50 PSI	1
39	RN18161	LABEL CONST/AUTO	1
40	RN18176	CORD CONN-TEMP SWITCH	1
41	RN18210	LIGHT-RED	2
42	RN18214	LIGHT-GREEN	1
43	RN18250	METER-HOUR 120/60HZ	1
44	RN18339	BLOCK-TERMINAL CONTROL	1
45	RN18339-1	END CLAMP-SMALL CONTROL	10
46	RN18422	VALVE-SOLENOID UNL	2
47	RN18425	VALVE-BLOW DOWN 1/2 AC	1
48	RN18658	TEMP SWITCH R/S15-30	1
49	RN18659	TEMP SWITCH R/S15-50	1
50	RN18683	TEMP GAUGE	1
51	RN18679	THERMOWELL M14 X 1.5	1
52	RN19002	MOTOR 2 HP 1800 ODP	1
53	RN19050-21	MOTOR 50HP 1800 1.25SF ODP	1
54	RN24040	FILTER-4"	1
55	RN24575	VALVE-INLET 4" NO BYPASS	1
56	RN24577-1	GASKET INLET VALVE	1
57	[illegible]	[illegible]	1
58	RN28103	HEAD-OIL FILTER	[illegible]
59	RN28204	ELEMENT-OIL FILTER	1

	DESCRIPTION	QTY
60 RN32217	COOLER OIL/AIR ASM 40-50	
61 RN32406	BLADE-FAN 50-60	1
62 RN34120	SEPARATOR-1 1/2" 50,60	1
63 RN42105	VALVE-SHUTTLE 1/4"	1
64 RN42110	VALVE,CHECK 1/4"	1
65 RN42111	VALVE-CHECK 3/8"	2
66 RN42126-4	VALVE MPV 1 1/4 15-30	1
67 RN42220	VALVE-BALL 1/2"	1
68 RN42225	VALVE-BALL-3/4"	1
69 RN42240	VALVE-BALL 1 1/2"	1
70 RN42403	VALVE-THERM SAE 170'	1
71 RN42613	VALVE-MOD WIDE DIFF	1
72 RN52131-2	ORIFICE, SCAV 5/64(.078)	1
73 RN52139	MALE O.R.O. ADAPTER	1
74 RN52141	ADAPTER 90' 3/4 TUBEX1 1/16-12	1
75 RN52142	ORIFICE-PLUG .040	2
76 RN52143	ST CONN 3/4 TUBEX1 1/16-12	1
77 RN52145	FTG 1 1/2" SAE X 1 1/2" TUBE 90'	1
78 RN52149-1	ORIFICE BD 9/64, 1/2 X 1 1/2NIP	1
79 RN52151	SCAV COMPRESSION CONN .255	1
80 RN52160	MUFFLER, 1/4"	1
81 RN52170	GLASS-SIGHT SCAV.	1
82 RN52171	GLASS-SIGHT ASSY R/S15-200	1
83 RN60064	FTG 1 1/2" TUBE R/S500	1
84 RN60123	HOSE 7/8" ID R/S40-50-67"	1
85 RN60137	ELBOW MALE 90' 1 1/4X1	1
86 RN60161	90' MALE EL 1"OD X 1"NPT	1
87 RN60255	MOUNTS-VIBRATION	2
88 VA088G	ST. EL 90' 1/4" GALV	6
89 VAA717	CONNECTOR MALE 3/4X3/4	1
90 VAA721	CONNECTOR MALE 1 1/4"X1 1/4"	1
91 VAA722	90' MALE EL	2
92 VAA723	90' MALE EL 1 1/2X1 1/2	2
93 VAA745	ADAPTER 1/8 BSPPX 1/4 FPT	1
94 VAA746	WASHER FOR VAA745	1
95 VAA754	MALE EL90' 1/4X1/4 BLACK MPT	1
96 VAA755	UNION 1/4X1/4 BLK	1
97 VAA756	NUT 1/4" OD BLK	1
98 VAA757	SLEEVE 1/4" OF BLK	1
99 VAD815	TEE 1 1/4 X 1/2 X 1 1/4	1
100 VS618	TIMER SOCKET	1
101 610000	WIRING DIA R/S15-500	1
102 1270009	DECAL-WIRING 15-500	1
103 1330026	TIMER	1
104 1330036	RELAY-PLUG IN	1
105 1330037	SOCKET-RELAY	2
106 1330038	SPRING-RELAY	2
107 RN18314-1	FUSE BLOCK 30AMP 600V	2
108 RN18317-1	FUSE 10AMP MTR 600V	1
109 RN18329	TRANS 200VA FUSED 230/460	3
110 RN18349	FUSE-TRANS-PRI 4	1
111 RN18351	FUSE TRANS-SEC 2	2
112 RN18975	HTR PACKS	1
113 RN18990	O/L HEATER PACK	1
114 1330001	SIZE N PANEL OPEN UNIT	1
115 1330040	SIZE N PANEL ENCLOSED UNIT	1
116 RN18133-2	SWITCH-PRESSURE 115-125	1
[illegible]	[illegible]	1
118 RN42815	VALVE-SAFETY 1/2"-150 PSI	
119 CS677	SUPPORT, ELECT BOX R/S40-50	1

LIN	PART#	DESCRIPTION	QTY
120	RN18170	HOLE GROMMETS	1
121	RN18172	HOLE GROMMETS	1
122	RN30323	GAUGE AIR PSI 2 1/2" LIQ FIL	2

ALAN BRIAN, INC. 314-432-0126

FORM QAB274 (3-98)

NOTE: Warranty registration must be completed and returned to validate warranty.

CURTIS-TOLEDO INC. St. Louis, missouri 63133 LIMITED WARRANTY

CURTIS-TOLEDO will, at its option, repair, replace, or refund the purchase price of any materials or parts of any new equipment manufactured by CURTIS-TOLEDO which, within the Applicable Warranty Period specified on the reverse side of this card, prove, upon examination by CURTIS-TOLEDO, to be defective in material and/or workmanship, provided that Buyer meets all of the applicable requirements of this Warranty and none of the exclusions apply.

To qualify for warranty service, Buyer must: (1) contact CURTIS-TOLEDO prior to returning any item and obtain a returned material authorization number; and (2) pay all transportation charges to CURTIS-TOLEDO and back to Buyer.

This warranty does not apply to and there is expressly EXCLUDED from coverage hereunder, the following: (1) equipment which has been installed improperly, or which has not been operated and maintained in accordance with CURTIS-TOLEDO'S ratings and instructions and in accordance with good industry practices; (2) equipment which has been damaged in transit or by misuse, neglect, or accident; (3) equipment which has been repaired or modified without authorization from CURTIS-TOLEDO; (4) the effects of normal wear and tear, and the effects of corrosion and erosion due to the presence of substances in the environment in which the equipment is operated and/or in gases passing through the equipment; (5) labor charges incidental to the service, adjustment, removal, or repair of any materials or parts, or any other expenses incurred by Buyer (all such charges and expenses shall be paid by Buyer); and (6) equipment manufactured by others, such as dryers, electric motors, gasoline engines, starters, and controls (any claims with regard to such equipment must be made by the buyer to the original manufacturer of same).

The Warranty provisions contained herein apply ONLY to buyers for purposes of resale and/or to commercial or industrial users. They do not apply to buyers or users of CURTIS-TOLEDO products for personal, family, or household purposes, for whom there is NO WARRANTY, but to whom the limitations and exclusions shown below nonetheless apply.

CURTIS-TOLEDO ASSUMES NO LIABILITY FOR ANY INCIDENTAL OR CONSEQUENTIAL DAMAGES UNDER ANY WARRANTY, EXPRESS OR IMPLIED AND ALL SUCH LIABILITY IS HEREBY EXPRESSLY EXCLUDED. THE TOTAL LIABILITY OF CURTIS-TOLEDO HEREUNDER FOR ANY AND ALL LOSSES AND DAMAGES ARISING OUT OF ANY CAUSE WHATSOEVER SHALL, IN NO EVENT, EXCEED THE PURCHASE PRICE OF THE GOODS WITH RESPECT TO WHICH SUCH CAUSE ARISES. THERE IS NO OTHER WARRANTY OR REPRESENTATION OF ANY KIND WHICH EXTENDS BEYOND THE FACE HEREOF. ALL OTHER WARRANTIES, EXPRESS OR IMPLIED INCLUDING WARRANTIES OF MERCHANTABILITY OR FITNESS FOR A PARTICULAR PURPOSE, ARE HEREBY EXPRESSLY EXCLUDED.

D

OWNERS COPY

PROCEDURE FOR SETTING MODULATION CONTROLS
R/S SERIES

1. Screw adjusting screw on the regulator all the way in and start the unit.

2. Set the air pressure switch at the rating of the machine.

3. With the unit running set the reciever pressure at 10 psig below the air pressure switch setting.

4. Open the regulator, by turning the adjusting screw counter-clockwise, until you feel air venting from the cap orifice.

5. Close the reciever valve and let the pressure rise. It should reach the air pressure switch setting and unload the unit.

6. If it does not reach the switch setting, turn the adjusting screw clockwise until the air pressure switch setting is reached.

7. Relieve the reciever pressure and recheck the modulation setting. The final setting will be between 7 and 12 psig below the air pressure switch setting

CONTROL REGULATOR MODULATION
TROUBLE SHOOTING AND REPAIR

A) MODULATING REGULATOR IS NOT SENDING SIGNAL
- CHECK AIR SUPPLY
- ADJUSTING SCREW IN TOO FAR

B) MODULATING REGULATOR SENDING SIGNAL TOO SOON
- ADJUSTING SCREW OUT TOO FAR
- DEBRIS MAKING SEAT LEAK

ALWAYS LOOSEN ADJUSTING SCREW NUT BEFORE ADJUSTING

HOLD THUMB SCREW SO CAP DOES NOT MOVE AND/OR SETTING DOES NOT CHANGE

DISASSEMBLY:

1) TURN OFF AIR
2) LOOSEN ADJUSTING SCREW
3) TAKE CAP OFF
4) GENTLY REMOVE DIAPHRAM ASSEMBLY
5) EXAMINE FOR DEBRIS & WIPE OFF DO NOT USE SOLVENTS
6) ALL PARTS SHOULD BE FREE OF KNICKS & PARTICLES

REASSEMBLY:

1) PLACE SEAT CFR AGAINST BODY IN CENTER OF HOUSING
   (A SMALL AMOUNT OF GREASE UNDER SEAT MAY BE HELPFUL)
2) CENTER DIAPHRAM ASSEMBLY ON SEAT
3) INSERT SPRING AND GUIDE
4) TIGHTEN CAP (90 IN-LBS) (OVER-TORQUEING CAP WILL DAMAGE DIAPHRAM)
5) TIGHEN ADJUSTING SCREW (HAND TIGHT)

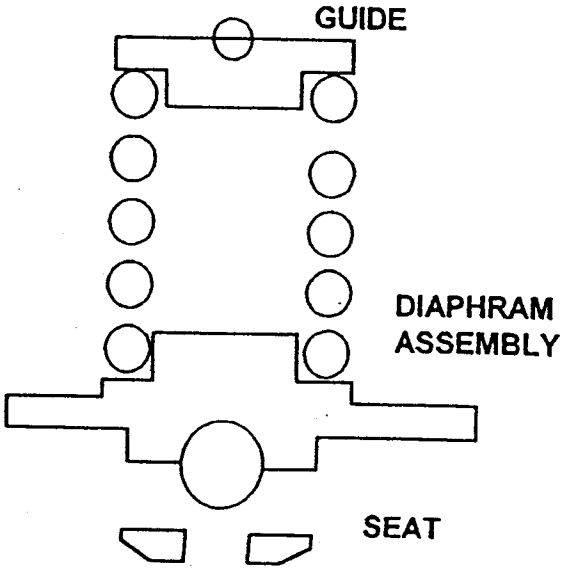

** DISASSEMBLY VIOLATES WA[illegible]

Technical Bulletin

R/S2000 PETROLEUM OIL

Rotary Compressor Lubricants

Product Description

R/S2000 Oil is a premium quality mineral oil based lubricant developed specifically to meet the unique lubrication requirements of oil flooded rotary air compressors. This oil may be used in both rotary screw and sliding vane type compressors. R/S2000 Oil is recommended for both static and mobile compressor units with working temperatures up to 250 F. R/S2000 Oil is formulated from superior, high performance, turbine quality additives which are carefully selected to give long service life, excellent oxidation, stability, enhanced protection from corrosion and wear, minimal carry over and excellent anti-foam, air release and water tolerance properties.

R/S2000 Oil is available in three viscosity grades, ISO 32, 46 and 68.

Applications

R/S2000 Oil has been specifically developed to provide high quality lubricant performance for all designs of oil flooded rotary screw and vane type air compressors. This product is suitable for use over a wide range of operating conditions and ambient temperatures in machines of single and multistage design with male or female drives.

Although developed principally for static heavy duty industrial compressors, this product is equally applicable to mobile equipment, provided that the lubrication system is separate from that of the drive unit.

R/S2000 Oil will fully meet the requirements of all major rotary screw and vane compressor manufacturers, including Atlas Copco, Dresser Rand Sullair and Compair. R/S2000 Oil also meets the proposed Lubricant Standard ISO/DP 6521. Categories DAH and DAG for rotary screw compressors.

HANDLING & SAFETY INFORMATION

Refer to R/S2000 Material Safety Data sheet (MSDS) and Environmental Data Sheet (EDS) The MSDS and EDS should be available from your supplier or you may call general MSDS assistance number, 1-800-240-6737.

SOC: 671a-96
(Replaces SOC 671-93)

Typical Properties of R/S2000 Oil

	ASTM Method	ISO GRADE 32	46	68
Product Code		67122	67120	67123
Property				
Viscosity:	D445			
@ 40°C, cSt		32	46	68
@ 100°C, cSt		5.4	6.8	8.8
Viscosity Index	D2270	101	100	102
Gravity, API @ 60°F	D1298	30.5	29.7	29.2
Pour Point, °F	D97	-20	-10	-5
Rust Test	D665B	Pass	Pass	Pass
Foam Test, Tendency/Stability	D892			
Sequence I		0/0	0//0	0/0
Sequence II		20/0	15/0	0/0
Sequence III		10/0	10/0	0/0

NOTE: Product typical properties are current as of the date of publication of this Technical Bulletin. These properties are determined by averaging actual batch data provided by the manufacturing locations over a period of time. These typical data cannot be guaranteed to be identical to the products produced at any specific time. The data provided in this publication are presented as a guide to Curtis Lubricant users. Check with your Curtis Representative for the latest information.

CURTIS TOLEDO, INC.
1905 Kienlen Ave.
St. Louis, MO. 63133

1-314-383-1300
Fax 1-314-381-1439

CURTIS-TOLEDO, INC.
KIENLEN AVENUE
ST. LOUIS, MO 63133

WARRANTY REGISTRATION
START-UP CHECKLIST – ROTARY SCREW COMPRESSOR

COMPRESSOR MODEL NUMBER _ _ _ _ _ _ _ _

SERIAL NUMBER _ _ _ _ _ _ _ _ _ _ _ _ _ _ _ _

AIR END MODEL/TYPE _ _ _ _ _ _ _ _

AIR END SERIAL NO. _ _ _ _ _ _ _ _

FACTORY SHIP DATE MO _ _ DAY _ _ YEAR _ _ _ _

START DATE _ _ _ _ _ _ _ _

CURTIS-TOLEDO ORDER NO. _ _ _ _ _ _

THIS CHECKLIST DOES NOT REPLACE THE INSTRUCTIONS CONTAINED IN THE CURTIS-TOLEDO SERVICE MANUAL. ALWAYS REFER TO THE SERVICE MANUAL FOR PROPER PROCEDURES, METHODS, OPERATING SPECIFICATIONS, AND SAFETY PRECAUTIONS.

PRE-START:

- ☐ CHECK ALL PIPING, PIPE COUPLINGS AND HYDRAULIC HOSE CONNECTIONS (NOTE: FITTINGS MAY LOOSEN IN HANDLING AND SHIPPING).
- ☐ CHECK MOTOR AND COMPRESSOR MOUNTING BOLTS FOR PROPER TIGHTNESS.
- ☐ CHECK COUPLING AND/OR BELT DRIVE ALIGNMENT (INSPECT V-BELT DRIVE FOR PROPER TENSION).
- ☐ CHECK OIL LEVEL WHILE THE UNIT IS TURNED OFF AND OIL HAS SETTLED TO ITS LEVEL: ADD OIL ONLY IF THE OIL GAUGE READS IN THE "ADD OIL" RANGE.
- ☐ CHECK AIR END INLET FILTER. INSPECT FOR OBSTRUCTIONS AND PROPER MOUNTING.
- ☐ CHECK MOISTURE SEPARATOR AND AUTO DRAINS FOR INSTALLATION AND FUNCTION.
- ☐ CHECK WATER PIPE CONNECTIONS AND SERVICE (IF WATER COOLED).

SAFETY:

- ☐ FAN, COUPLING, BELT DRIVE GUARDS IN PLACE WITH NO INTERFERENCE.
- ☐ SAFETY RELIEF VALVES UNOBSTRUCTED AND OPERATIONAL.
- ☐ SAFETY SHUTDOWN DEVICES FOR PROPER FUNCTION AND OPERATION.
- ☐ ELECTRICAL CONNECTIONS TO CODE AND PROPERLY WIRED TO CURTIS-TOLEDO WIRING REQUIREMENTS.
- ☐ CHECK TO MAKE SURE UNIT IS LEVEL AND BOLTED TO FLOOR.
- ☐ READ COMPRESSOR OPERATING AND/OR INSTRUCTION MANUAL AND UNDERSTAND COMPRESSOR OPERATION AND CONTROLS PRIOR TO STARTING UNIT.

START-UP

- ☐ CHECK CORRECT ROTATION OF DRIVE MOTOR. NOTE: MOMENTARILY BUMP START TO CHECK ROTATION. IF ALLOWED TO RUN IN WRONG ROTATION, AIR END DAMAGE WILL OCCUR.
- ☐ CHECK CORRECT ROTATION OF AIR/OIL COOLER FAN.
- ☐ CHECK OPERATING PRESSURE ON THE UNIT. OBSERVE AND ADJUST CONTROLS FOR PROPER OPERATION OF THE COMPRESSOR UNIT AND SYSTEM PRESSURE.
- ☐ CHECK WATER SERVICE AND WATER FLOW RATES / TEMPERATURES NOT TO EXCEED 110° F.
- ☐ CHECK FOR UNUSUAL NOISE.
- ☐ CHECK FOR NORMAL VIBRATION LEVEL.
- ☐ CHECK UNIT FOR ANY AIR, WATER, AND OIL LEAKS AND CORRECT AS NECESSARY.
- ☐ WITH POWER OFF AND LOCKED OUT, CHECK ALL MOTOR WIRING AND ALL PANEL TERMINAL CONNECTIONS.
- ☐ CHECK FOR PROPER VENTILATION THROUGH AND AROUND THE UNIT.

OPERATIONAL INFORMATION:

ASURE LINE VOLTAGE L1._____ L2._____ L3._____
FORE STARTING)

MEASURE AT FULL LOAD:
LINE VOLTAGE L1._____ L2._____ L3._____

DRIVE MOTOR AMPS L1._____ L2._____ L3._____

FAN MOTOR AMPS L1._____ L2._____ L3._____

AMBIENT ROOM AIR TEMP. _____ °F

AIR/OIL TEMP AS SHOWN ON STARTER PANEL GAUGE _____ °F

SUMP AIR PRESSURE FULL LOAD _____ PSIG

SUMP AIR PRESSURE UNLOADED _____ PSIG

UNIT DISCHARGE AIR PRESSURE AT FULL LOAD _____ PSIG

PRESSURE SETTING: LOAD _____ PSIG

UNLOAD _____ PSIG

MODULATION SET _____ PSIG

COOLING WATER TEMP. IN _____ °F

COOLING WATER PRESSURE IN _____ PSIG

COOLING WATER TEMP. OUT _____ °F

COOLING WATER TYPE:
- ☐ COOLING TOWER
- ☐ CITY WATER
- ☐ LAKE/RIVER

STARTER-WYE DELTA TIMER SETTING _____

AUTO SHUT DOWN TIMER SETTING _____

OIL SEPARATOR DIFFERENTIAL PSIG _____

APPROXIMATE DUTY CYCLE _____%

NOTE: REVIEW COMPRESSOR NAME PLATE FOR MAXIMUM DISCHARGE AIR PRESSURE SETTING.

INSTALLATION INFORMATION:

LOCATION: ☐ INDOOR-HEATED ☐ INDOOR-NON HEATED ☐ CLEAN ☐ DUSTY ☐ ADVERSE
E: FREEZE PROTECTION MAY BE REQUIRED TO VALIDATE WARRANTY.

☐ OUTDOOR LOCATION ☐ PROTECTED FROM THE ELEMENTS ☐ CLEAN ☐ DUSTY ☐ ADVERSE
NOTE: WARRANTY MAY BE VOID IF UNIT IS INSTALLED WITHOUT OUTDOOR AND FREEZE PROTECTION PACKAGES.

SUMMER AMBIENT TEMPERATURE RANGE _____ °F TO _____ °F
WINTER AMBIENT TEMPERATURE RANGE _____ °F TO _____ °F
SYSTEM AIR RECEIVER SIZE _____ GALLONS

☐ REVIEW WITH OWNER OR DESIGNATED PERSONNEL CORRECT OPERATING PROCEDURES, ROUTINE MAINTENANCE SCHEDULES AND OIL SAMPLING REQUIREMENTS.

☐ MAKE SURE YOU HAVE SPARE FILTERS AND OIL ON HAND.

☐ OVERALL CONDITION AND APPEARANCE OF UNIT IS GOOD EXCEPT AS NOTED: _____

_____

_____

_____

COMPANY NAME _____

ADDRESS _____

CITY _____ STATE _____ ZIPCODE _____

ER'S REPRESENTATIVE _____

CURTIS DISTRIBUTOR _____

INSTALLED BY: _____

KEEP ORIGINAL - SEND COPY TO THE CUSTOMER SERVICE DEPT., CURTIS-TOLEDO, INC.
1905 KIENLEN AVENUE, ST. LOUIS, MO 63133 TELEPHONE 314-[illegible]

2 WAY PILOT OPERATED
General Service Solenoid Valves

Brass or Stainless Steel Bodies • 1/8" to 2 1/2" N.P.T.

Red-Hat • **Red-Hat II**

8210
SERIES

Specifications

Solenoid Enclosures: Valves listed in this series have either Red-Hat metal solenoid enclosures or Red-Hat II molded epoxy solenoids. Red-Hat II valves are identified by the change letter "G" in their catalog numbers, e.g., 8210G1, and are shown in red.

Standard Enclosures:
Red-Hat — Type 1 General Purpose

Red-Hat II — Types 1, 2, 3, 3S, 4 and 4X Combination General Purpose and Watertight.

Optional Enclosures:
Red-Hat — Types 3, 7 and 9 Combination Explosionproof and Raintight. To order, add prefix "EF" to catalog number. (Except Catalog Numbers 8210B57, 8210B58 and 8210B59)®

Red-Hat II — Types 3, 3S, 4, 4X, 6, 6P, 7 and 9 Combination Explosionproof and Watertight. To order, add prefix "EF" to catalog number.

Additional constructions are available. The Optional Electrical Features Section, page 11, contains descriptions and ordering information for: Open Frame Solenoids • Junction Box Enclosures • Panel Mount Constructions.

Electrical: Standard Voltages:
24, 120, 240, 480 volts, AC, 60 Hz
(or 110, 220 volts, AC, 50 Hz)

6, 12, 24, 120, 240 volts, DC

Other voltages are available when required.

Coil: Continuous duty molded Class F or H, as listed.

Nominal Ambient Temperature Ranges: Red-Hat and Red-Hat II Valves/AC Construction: 32°F to 125°F.

Red-Hat Valves/DC Construction: 32°F to 77°F (104°F occasionally).

Red-Hat II Valves/DC Construction: 32°F to 104°F.
Refer to Engineering Section for details.

Valve Parts In Contact with Fluids:
Body — Brass or Stainless Steel, as listed
Seals and Discs — Buna "N" or Teflon*, as listed
Disc Holder — Nylon, as listed
Core Tube — 305 s.s.
Core and Plugnut — 430F s.s.
Springs — 302 s.s.
Shading Coil — Copper (brass body); Silver (stainless steel body)

Approvals: CSA certified.
UL listed as indicated. Refer to Engineering Section for details.

Ordering Information:
Important: We must have catalog number, voltage and Hertz, operating pressure and fluid handled. Use strainers with solenoid valves.

*DuPont Co. trademark

SPECIFICATIONS

Pipe Size (ins.)	Orifice Size (ins.)	Cv Flow Factor	Operating Pressure Differential (psi) Min.	Max. AC Air-Inert Gas	Max. AC Water	Max. AC Light Oil @ 300 SSU	Max. DC Air-Inert Gas	Max. DC Water	Max. DC Light Oil @ 300 SSU	Max. Fluid Temp. °F. AC	Max. Fluid Temp. °F. DC	Standard Solenoid Enclosures Red-Hat–Type 1 Red-Hat II–Types 1,2,3,3S,4 and 4X: Brass Body Catalog Number	Brass Body Constr. Ref. No. ④	Brass Body UL Listing	S.S. Body Catalog Number	S.S. Body Constr. Ref. No. ④	S.S. Body UL Listing	Watt Rating/ Class of Coil Insulation ⑦ AC	Watt Rating/ Class of Coil Insulation ⑦ DC
NORMALLY CLOSED (Closed when de-energized), Buna "N" or Teflon② Seating																			
3/8	3/8	1.5	①	150	125	—	40	40	—	180	150	8210G73③	1P	•	8210G36③	1P	•	6.1/F	11.6/F
3/8	5/8	3	0	150	150	—	40	40	—	180	150	8210G93	5D	o	—	—	—	10.1/F	11.6/F
3/8	5/8	3	5	200	150	135	125	100	100	180	150	8210G1	6D	o	—	—	—	6.1/F	11.6/F
3/8	5/8	3	5	300	300	300	—	—	—	175	—	8210G6	5D	o	—	—	—	17.1/F	—
1/2	7/16	2.2	①	150	125	—	40	40	—	180	150	8210G15③	2P	•	8210G37③	2P	•	6.1/F	11.6/F
1/2	5/8	4	0	150	150	—	40	40	—	180	150	8210G94	5D	o	—	—	—	10.1/F	11.6/F
1/2	5/8	4	0	150	150	125	40	40	—	175	150	—	—	—	8210G87	7D	•	17.1/F	11.6/F
1/2	5/8	4	5	200	150	135	125	100	100	180	150	8210G2	6D	o	—	—	—	6.1/F	11.6/F
1/2	5/8	4	5	300	300	300	—	—	—	175	—	8210G7	5D	o	—	—	—	17.1/F	—
3/4	5/8	5	0	150	150	125	40	40	—	175	150	—	—	—	8210G88	7D	•	17.1/F	11.6/F
3/4	3/4	5	5	125	125	125	100	90	75	180	150	8210G9	9D	o	—	—	—	6.1/F	11.6/F
3/4	3/4	5	0	150	150	—	40	40	—	180	150	8210G95	8D	o	—	—	—	10.1/F	11.6/F
3/4	3/4	6.5	5	250	150	100	125	125	125	180	150	8210G3	11D	o	—	—	—	6.1/F	11.6/F
3/4	3/4	6	0	350	300	200	200	180	180	200	77	8210826②⑪	10P	⑤	—	—	—	15.4/F	30.6/H
1	1	13	0	150	125	125	100	100	80	180	77	8210854③	31D	⑤	8210D89	15D	⑤	15.4/F	30.6/H
1	1	13	5	150	150	100	125	125	125	180	150	8210G4	12D	o	—	—	—	6.1/F	11.6/F
1	1	13.5	0	300	225	115	—	—	—	200	—	8210827	14P	•	—	—	—	20/F	—
1 1/4	1 1/8	15	0	150	125	125	100	100	80	180	77	8210855③	32D	⑤	—	—	—	15.4/F	30.6/H
1 1/4	1 1/8	15	5	150	150	100	125	125	125	180	150	8210G8	16D	o	—	—	—	6.1/F	11.6/F
1 1/2	1 1/4	22.5	0	150	125	125	100	100	80	180	77	8210856③	33D	⑤	—	—	—	15.4/F	30.6/H
1 1/2	1 1/4	22.5	5	150	150	100	125	125	125	180	150	8210G22	18D	•	—	—	—	6.1/F	11.6/F
2	1 3/4	43	5	150	125	90	50	50	50	180	150	8210G100	20P	•	—	—	—	6.1/F	11.6/F
2 1/2	1 3/4	45	5	150	125	90	50	50	50	180	150	8210G101	21P	•	—	—	—	6.1/F	11.6/F

VFC Series Visi-Float® Flowmeter Installation and Operating Instructions

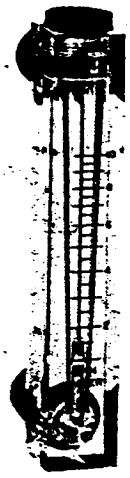

Back Connections

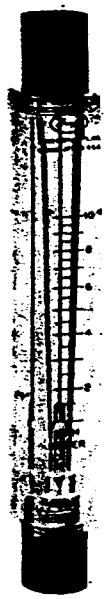

End Connections

SPECIFICATIONS

Meter Body:	Acrylic Plastic Metering tube machined into body
Wetted Metal Parts:	Stainless Steel
Floats:	Stainless Steel
Fittings:	PVC
Guide Rod Holder:	Mineral reinforced nylon bonded in fitting with epoxy (EC models only)
Pipe Connections:	1" N.P.T. female, horizontal or vertical
"O" Rings:	Buna-N
Mounting Inserts:	10-32 x ⅜" deep
Scale:	Hot pressed into acrylic body
Pressure Rating:	100 P.S.I. maximum
Temperature Rating:	120°F maximum
Accuracy:	±2% of full scale

Dwyer Series VFC Visi-Float® flowmeters are available in two basic styles, either back or end connected with direct reading scales for air or water. Installation, operation, and maintenance are simple and require only a few common sense precautions to assure long, accurate, trouble-free service.

CALIBRATION

All Dwyer flowmeters are calibrated at the factory and normally will remain within their accuracy tolerance for the life of the device. If at any time you wish to re-check its calibration, do so only with instruments or equipment of certified accuracy. Do not attempt to check the Dwyer Visi-Float® flowmeter with a similar flowmeter as even minor variations in piping and back pressure can cause significant differences between the indicated and actual readings. If in doubt, your Dwyer flowmeter may be returned to the factory and checked for calibration at no charge.

LOCATION

Select a location where the flowmeter can be easily read and where the temperature will not exceed 120°F (49°C). The mounting surface and piping to the flowmeter should be free from vibration which could cause fatigue of fittings or mounting inserts. Piping must be carefully arranged and installed to avoid placing stress on fittings and/or flowmeter body. Avoid locations or applications with strong chlorine atmospheres or solvents such as benzene, acetone, carbon tetrachloride, etc. Damage due to contact with incompatible gases or liquids is not covered by warranty. Compatability should be carefully determined before placing in service.

PIPING

INLET PIPING:

It is good practice to approach the flowmeter inlet with as few elbows, restrictions and size changes as possible. Inlet piping should be as close to the flowmeter connection size as practical to avoid turbulence which can occur with drastic size changes. The length of inlet piping has little effect on normal pressure fed flowmeters.

For vacuum service, the inlet piping should be as short and open as possible to allow operation at or near atmospheric pressure and maintain the accuracy of the device. Note that for vacuum service, any flow control valve used must be installed on the discharge side of the flowmeter.

DISCHARGE PIPING

Piping on the discharge side should be at least as large as the flowmeter connection. For pressure fed flowmeters on air or gas service, the piping should be as short and open as possible. This allows operation at or near atmospheric pressure and assures the accuracy of the device. This is less important on water or liquid flowmeters since the flowing medium is generally incompressible and back pressure will not affect the calibration of the instrument.

©Copyright 1988 Dwyer Instruments, Inc.

DWYER INSTRUMENTS INC
P.O. BOX 373 • MICHIGAN CITY, INDIANA 46360
Telephone 219/879-8000

SERIES VFC
Visi-Float® Flowmeters

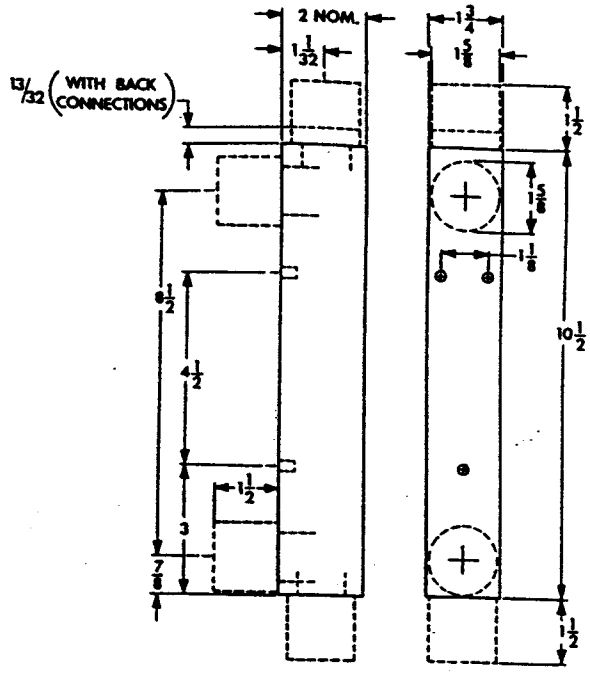

DIMENSIONS

POSITION AND MOUNTING

All Visi-Float® flowmeters must be installed in a vertical position with the inlet connection at the bottom and outlet at the top.

SURFACE MOUNTING:
Drill three holes in panel using dimensions shown in drawing. Holes should be large enough to accommodate #10-32 machine screws. If back connected model, drill two additional holes for clearance of fittings. Install mounting screws of appropriate length from rear. Attach piping using RTV silicone sealant or Teflon® tape on threads to prevent leakage.

CAUTION: Do not overtighten fittings or piping into fittings. Maximum recommended torque is 10 ft/lbs. Hand tighten only.

IN LINE MOUNTING:
Both end connected and back connected models may be installed in-line supported only by the piping. Be sure that flowmeter is in a vertical position and that piping does not create excess stress or loading on the flowmeter fittings.

OPERATION

Once all connections are complete, introduce flow as slowly as possible to avoid possible damage. With liquids, make sure all air has been purged before taking readings. Once the float has stabilized, read flow rate by sighting across the largest diameter of the float to the scale graduations on the face of the device.

MAINTENANCE

The only maintenance normally required is occasional cleaning to assure proper operation and good float visibility.

DISASSEMBLY:
The flowmeter can be completely disassembled by removing the connection fittings and top plug. When lifting out the float guide assembly, be careful not to lose the short pieces of plastic tubing on each end of the guide rod which serve as float stops.

CLEANING:
The flowmeter body and all other parts can be cleaned by washing in a mild soap and water solution. A soft bristle bottle brush will simplify cleaning of the flow tube. Avoid benzene, acetone, carbon tetrachloride, gasoline, alkaline detergents, caustic soda, liquid soaps, (which may contain chlorinated solvents), etc., and avoid prolonged immersion.

RE-ASSEMBLY:
Install the lower fitting and then the float and float guide. Finally install the upper fitting and plug being certain that both ends of the float guide are properly engaged and the float is correctly oriented. A light coating of silicone stop cock grease or petroleum jelly on the "O" rings will help maintain a good seal as well as ease assembly.

ADDITIONAL INFORMATION

For additional flowmeter application information, conversion curves, correction factors and other data covering the entire line of Dwyer flowmeters, write for bulletin F-41.

LITHO IN U.S.A. 12/88

FR NO 51-440448-00

DWYER INSTRUMENTS, INC.

AUTO DRAIN

Installation & Maintenance instructions for the Electronic drain valve

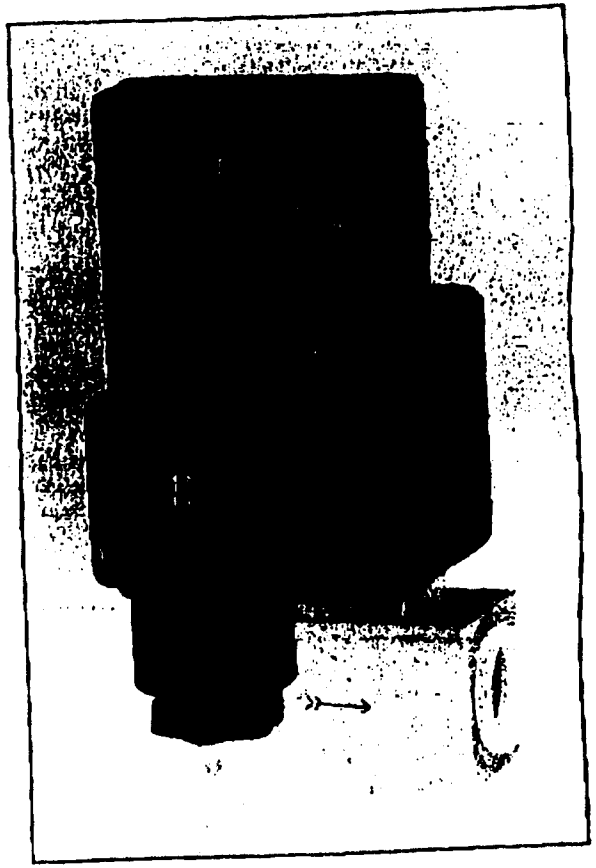

EDV 1/4

CAUTION !!!
When using DC (Direct current), the positive pole (+) should be connected to connector 1.

Figure 1

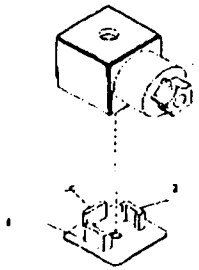

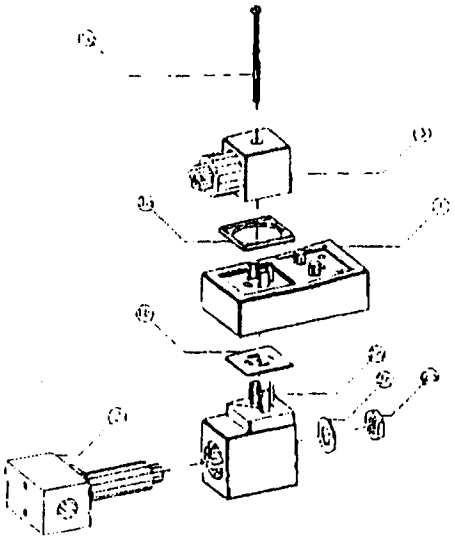

Item	Qty	Description
3A	1	Gasket
3	1	Connector
2C	1	Washer
2B	1	Nut
2A	1	Coil
2	1	Solenoid Valve
1B	1	Gasket
1A	1	Screw
1	1	TEC-22N Timer

Put the protection cap back into place and reconnect the connector to the timer and tighten the screw.

Setting the timer

Set the interval time (T2) with the right button.
Set the discharge time (T1) with the left button.
Setting the times should be done as follows:

-Set T1 to 2 seconds and T2 to 20 minutes and adjust from there as nececary.

Service & Maintenance

The electronic drain valve is maintenance free. However, we recommend replacing wearing valve parts every two years. You can obtain service kits from your dealer.
We also recommend you test the electronic drain valve every time the compressed air system is checked, by pressing the TEST-switch on the timer.

ANTO DRAIN

Product An electronic drain valve, consisting of:
A solenoid valve, a timer and a connector.

Technical data

Timer

Interval Time T2(1)	0.5 - 45 minutes
Discharge Time T1(1)	0.5 - 10 seconds
Manual Test Switch	
Supply Voltage (2)	24V - 240V± 10% 50/60Hz
Current Consumption	Max. 4mA
Operating Temperature	-10°C to +50°C
Environmental Protection	IP 65 NEMA 4
Case Material	ABS Plastic FR Grade
Connection	DIN 43650A ISO 4400/6952
Indicators	Yellow, valve open Yellow, valve closed

Valve

Type	2/2-Way direct acting valve
In/Out Ports	1/4", 3/8", 1/2" - NPT Female
Max. Working Pressure	230 psi
Operating Temperature	2°C/55°C ambient
Media Temperature	Max. 90°C
Valve Body	Forged Brass, Orifice .177"
Insulation	Thermal group H (200°C)
Environmental Protection	IP 65
Supply Voltage	24V - 240V See coil for the correct supply voltage!
Voltage Tolerance	± 10%
Mounting in any position	

Function The function of the electronic drain valve is to drain condensate from air compressors, air dryers, condensate seperators and air filters. The condensate can be drained in any interval between the adjustable time cycles of 0.5 to 45 minutes. The draining time can be set between 0.5 to 10 seconds.

Figure 1.

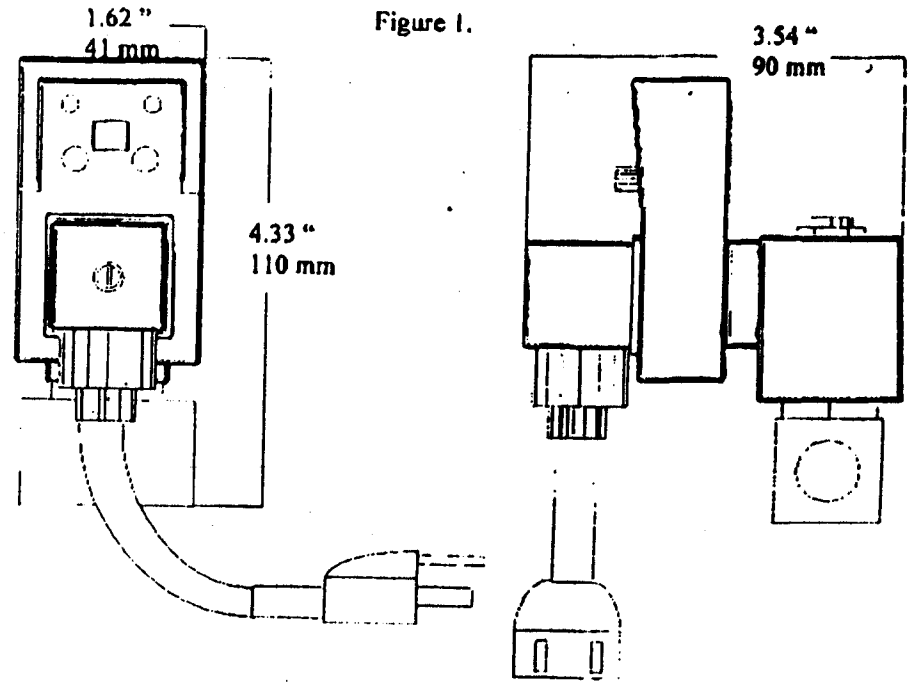

Front view

Side view

CAUTION! When installing the electronic drain valve make sure that:
- Compressed air is vented. (zero pressur)
- Electric power is switched off

Installation of the electronic drain valve

VALVE

When installing the electronic drain valve take note of the direction of the arrow on the valve. The arrow should comply with the flow direction of the condensate. The electronic drain valve can be mounted in any position. An apropiate reservoir should be installed mounted on the outlet side of the valve to collect the condensate. This can also be done using a pipe line. Beware when using a hose that no whiplash can occur when the valve is open.

TIMER

Remove the screw on the top of the connector. Remove the plug from the timer. Remove the protection cap from the connector. Connect the cable as shown in fig. 2.

EDV 1/4

FEATURES AND BENEFITS

Delta P Slide Indicator
Ensures economical operation by changing color when filter element requires replacement. Fitted as standard on filters up to 60 scfm (excluding KVA).

Delta P Gauge
Large, easy-to-read dual gauge faces allow housings to be mounted in any flow direction. Fitted as standard on filters from 100 and up (except KVA).

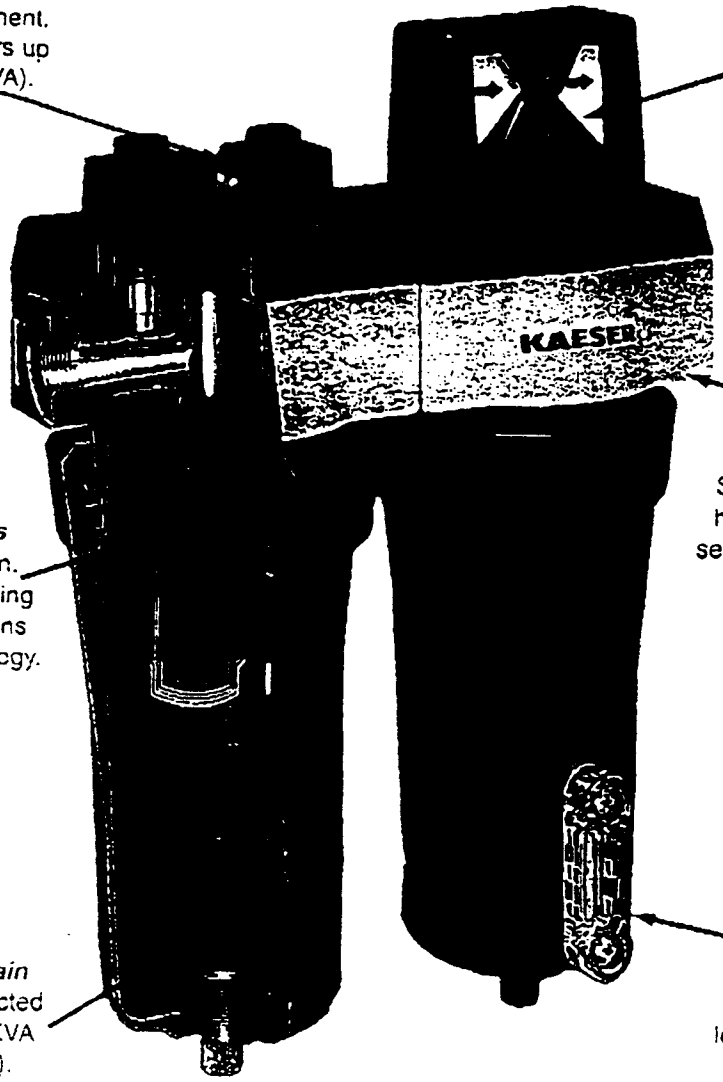

Modular Connections
Space-saving design allows housings to be connected in series without additional piping.

Color Coded Elements
Allows easy identification. Elements are designed using the latest media innovations and manufacturing technology.

Internal Automatic Drain
Reliably discharges collected condensate (excluding KVA and KFS 250 & above).

Liquid Level Indicator
Visual monitoring of liquid level and verification of drain operation.

New Modular Housings for Flows up to 780 scfm

- Manufactured from top quality aluminum, zinc and steel
- Epoxy powder coated (interior and exterior) for added durability and corrosion resistance
- Wall mounting brackets available
- All filter types fit same size housings

Maintenance Friendly

- Differential slide or gauge indicator and highly visible red zone displays when element(s) requires replacement
- 1/8 turn bayonet head to bowl connections for easy access (20 to 170 scfm)
- Threaded connection for 250 scfm and up

Enhanced Performance

- Latest filter media technology results in higher efficiencies and lower Delta P
- Additional filter type for extra critical applications
- 150°F maximum inlet temperature
- 250 psig maximum working pressure (pressure vessels, 225 psig)

SIX LEVELS OF COMPRESSED AIR QUALITY

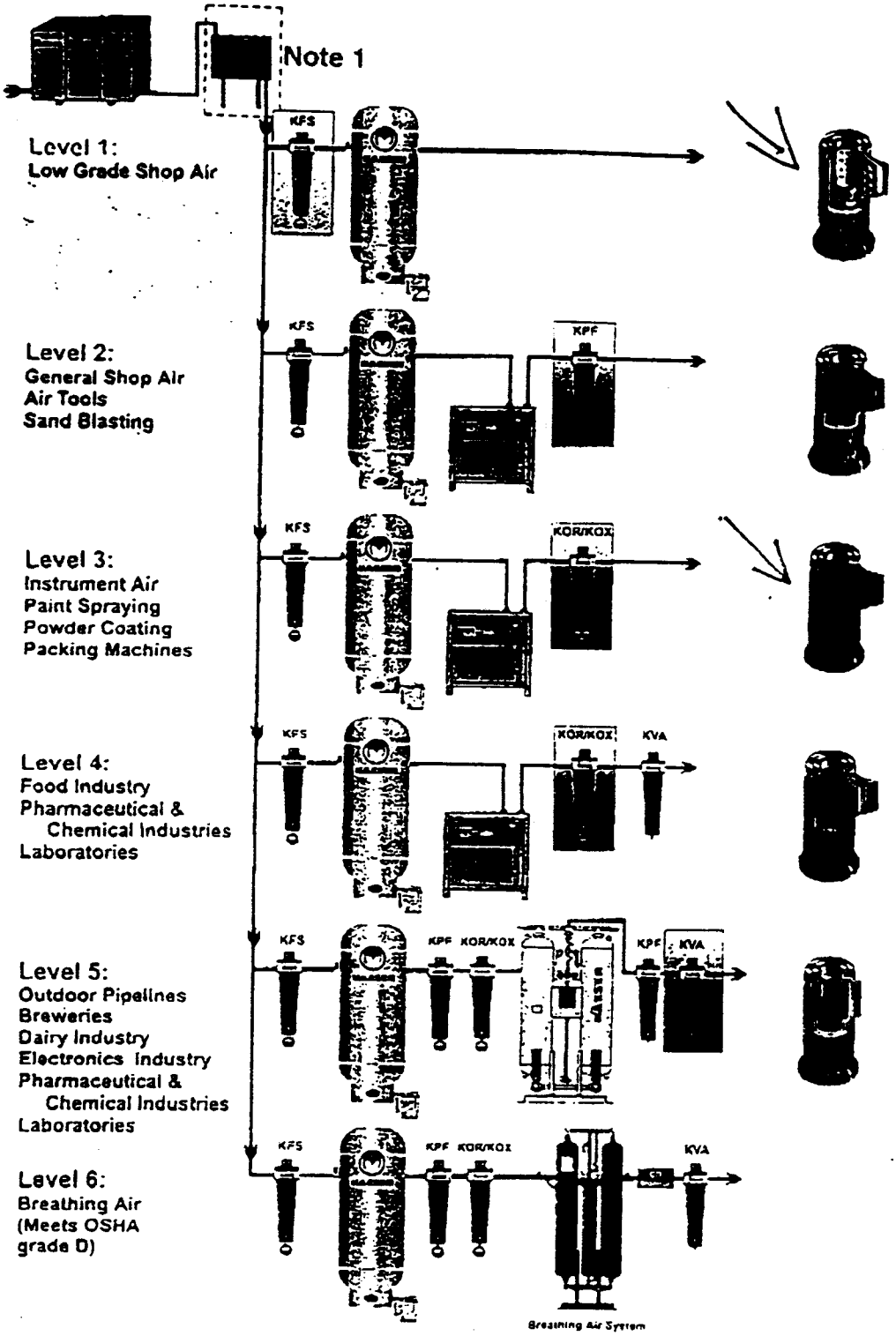

Level 1:
Low Grade Shop Air

KFS - Kaeser Filtered Separator
Downstream of Aftercooler (shown)
- Liquid Removal - 99+% of water
- Max. Liquid Loading - 25,000 ppm w/w
- Solid Particle Removal - 3 microns
- Oil Carry-Over - 5 ppm w/w
- Pressure Drop: Dry-1 psi; Wet-1.5 psi

Level 2:
General Shop Air
Air Tools
Sand Blasting

KPF - Kaeser Particulate Filter
Downstream of Refrigerated Air Dryer (shown)
Downstream of Heatless Desiccant Dryer
Upstream of KOR/KOX
- Liquid Removal - 100% of water
- Max. Liquid Loading - 2,000 ppm w/w
- Solid Particle Removal - 1 microns
- Oil Carry-Over - 1 ppm w/w
- Pressure Drop: Dry-1 psi; Wet-2 psi

Level 3:
Instrument Air
Paint Spraying
Powder Coating
Packing Machines

KOR - Kaeser Oil Removal Filter
Downstream of Refrigerated Air Dryer (shown)
Upstream of Desiccant Dryer
- Liquid Removal - 99.99+% of oil
- Max. Liquid Loading - 1,000 ppm w/w
- Solid Particle Removal - 0.01 microns
- Oil Carry-Over - 0.01 ppm w/w
- Pressure Drop: Dry-1 psi; Wet-3 psi

Level 4:
Food Industry
Pharmaceutical & Chemical Industries
Laboratories

KOX - Kaeser Oil Removal eXtra Fine Filter
Downstream of Refrigerated Air Dryer (shown)
Upstream of Desiccant Dryer or KVA
- Liquid Removal - 99.999+% of oil
- Max. Liquid Loading - 100 ppm w/w
- Solid Particle Removal - 0.01 microns
- Oil Carry-Over - 0.001 ppm w/w
- Pressure Drop: Dry-2 psi; Wet-6 psi

Level 5:
Outdoor Pipelines
Breweries
Dairy Industry
Electronics Industry
Pharmaceutical & Chemical Industries
Laboratories

KVA - Kaeser Vapor Adsorber
Downstream of KOR/KOX & Desiccant Air Dryer (shown)
- Liquid Removal - 0%
- Max. Liquid Loading - 0 ppm w/w
- Solid Particle Removal - 0.01 microns
- Vapor Carry-Over - 0.003 ppm w/w
- Pressure Drop: Dry-1 psi; Wet-N/A

Level 6:
Breathing Air
(Meets OSHA grade D)

Note 1: All Kaeser Rotary Screw Compressors have built in aftercoolers. However, for equipment without an aftercooler, or where the discharge temperature is 110°F or higher, an aftercooler should be positioned at the location shown.

KFS/KPF/KOR/KOX filter elements should be replaced at 10 psid (red area of Delta P gauge) or annually, whichever occurs first. KVA filter elements should be replaced after 1,000 hours of operation or annually, whichever occurs first. Kaeser recommends that all condensate should be processed through the Kaeser Condensate Management System (CMS) which provides a safe and economical means of disposing of the environmentally threatening oil/water mixture.

ENGINEERING DATA

Filter Type

- KFS - Kaeser Filtered Separator (removable sleeve)
- KPF - Kaeser Particulate Filter (mesh over white)
- KOR - Kaeser Oil Removal Filter (Standard Applications - red element)
- KOX - Kaeser Oil Removal eXtra Fine Filter (Critical Applications - blue element)
- KVA - Kaeser Oil Vapor Adsorber (green element)

Model	Air Flow @100 psig (cfm)	Inlet/Outlet Connection size	Standard Features of Filters					Max Working Pressure (psig)	Dimensions (inches) W x H	Weight (lbs)
			KFS	KPF	KOR	KOX	KVA			
Modular Type Housing										
(Filter Type) - 20	20	½" NPTF	1			1		250	4¼ x 11¼	8
(Filter Type) - 35	35	½" NPTF	1			1		250	4¼ x 11¼	8¼
(Filter Type) - 60	60	½" NPTF	1			1		250	4¼ x 3½	8½
(Filter Type) - 100	100	1" NPTF	2			2		250	5¼ x 15½	9¼
(Filter Type) - 170	170	1" NPTF	2			2		250	5¼ x 19¾	10½
(Filter Type) - 250	250	1½" NPTF	4			2		250	6½ x 23	10¼
(Filter Type) - 375	375	1½" NPTF	4		2	2		250	6¼ x 27½	11¼
(Filter Type) - 485.2	485	2" NPTF	5		3	3		250	7¾ x 31¼	28
(Filter Type) - 485.2.5	485	2½" NPTF	5		3	3	7	250	7¾ x 31¼	28
(Filter Type) - 625	625	2½" NPTF	5		3	3	7	250	7¾ x 37	33
(Filter Type) - 780	780	2½" NPTF	5	3	3	3	7	250	7¾ x 43	38
Pressure Vessel										
(Filter Type) - 1000P	1,000	3" NPTM	8			8		225	16 x 48	91
(Filter Type) - 1250P	1,250	3" NPTM	8			8		225	16 x 48	91
(Filter Type) - 1875P	1,875	3" NPTM	8			8		225	16¼ x 49	120
(Filter Type) - 2500P	2,500	4" Flange	8			8		225	20 x 52¼	179
(Filter Type) - 3125P	3,125	4" Flange	8			8		225	20 x 52¼	182
(Filter Type) - 5000P	5,000	6" Flange	8			8		225	24 x 54¾	271
(Filter Type) - 6875P	6,875	6" Flange	8		8	8		225	28 x 62¾	518
(Filter Type) - 8750P	8,750	6" Flange	8		8	8		225	28 x 62¾	527
(Filter Type) - 11875P	11,875	8" Flange	8		8	8	9	225	22 x 69¼	709
(Filter Type) - 16250P	16,250	8" Flange	8	8	8	8	9	225	39 x 68	918
(Filter Type) - 21250P	21,250	10" Flange	8	8	8	8	9	225	46 x 71	1412

1 - Internal Automatic Drain, Delta P Slide Indicator, Liquid Level Indicator.
2 - Internal Automatic Drain, Delta P Gauge, Liquid Level Indicator.
3 - Internal Automatic Drain, Delta P Gauge.
4 - Manual Drain, Delta P Gauge, Liquid Level Indicator (For automatic draining, optional external drain is available).
5 - Manual Drain, Delta P Gauge (For automatic draining, optional external drain is available).
6 - Manual Drain, liquid Level Indicator (Drain trap not required).
7 - Manual Drain (Drain trap not required).
8 - Plugged Drain Port, Delta P Gauge & Installation Kit (For automatic draining, optional external drain is available).
9 - Plugged Drain Port (Installation of a manual drain is recommended).

Sizing

To find the maximum flow for a filter size at pressures other than 100 psig, multiply the rated flow by the Correction Factor corresponding to the minimum pressure at the inlet of the filter. Do not select filters by pipe size. Use flow rate and operating pressure.

Minimum Inlet Pressure (psig)	20	30	40	60	80	100	120	150	200	250
Correction Factor	0.30	0.39	0.48	0.65	0.82	1.00	1.17	1.43	1.87	2.31

Note: Maximum inlet temperature is 150°F.

Specifications are subject to change without notice.

KAESER COMPRESSORS

COMPRESSED AIR FILTERS

Kaeser Gives You the Air Quality You Require

Ambient air contains contaminants that are drawn into the compressor. These contaminants are concentrated during compression and find their way into the compressed air system. A typical compressed air system is contaminated with abrasive solid particles such as dirt, rust and pipe scale, compressor lubricants, condensed water droplets, and oil and hydrocarbon vapors.

Contaminated compressed air systems increase operating costs by robbing the air system of useful power. This results in reduced efficiency, damaged air-operated equipment, higher maintenance and repair costs, reduced production caused by downtime, wasted man hours, and increased product rejections.

The properly sized and selected Kaeser filter(s) in conjunction with the appropriate dryer will remove these contaminants. This will allow your compressed air system to deliver the quality of air required for your particular application--whether it's plant air, instrument air, or breathing air.

High Performance Filters and Separators

Designed and developed using the latest innovations and manufacturing techniques, Kaeser offers a new solution to compressed air filtration. Filter housings are designed with larger flow areas to ensure low pressure drop and to provide easier installation, operation and maintenance. The result is consistent product quality while minimizing operating costs.

Kaeser Reduces the Cost of Compressed Air

Kaeser filters remove more contaminants with less pressure drop. Compare the operating pressure drop of competitive brand filters and remember, for every extra 2 psi of pressure drop, power requirement increases by 1%.

With a greater selection of application-specific filter types, sizes, and technical and service support, Kaeser offers a systemized solution for all of your compressed air quality requirements.

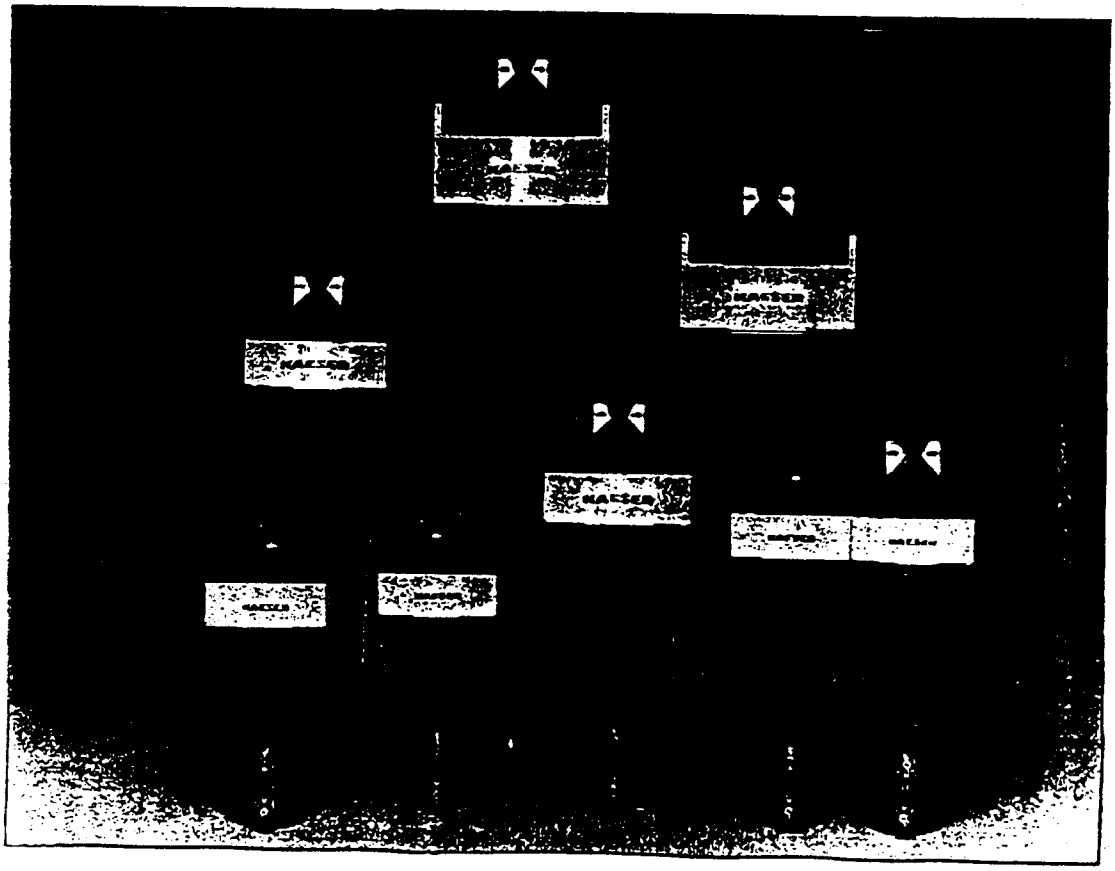

AIR SPARGE FLOWMETER

Series RM Rate-Master® Flowmeters

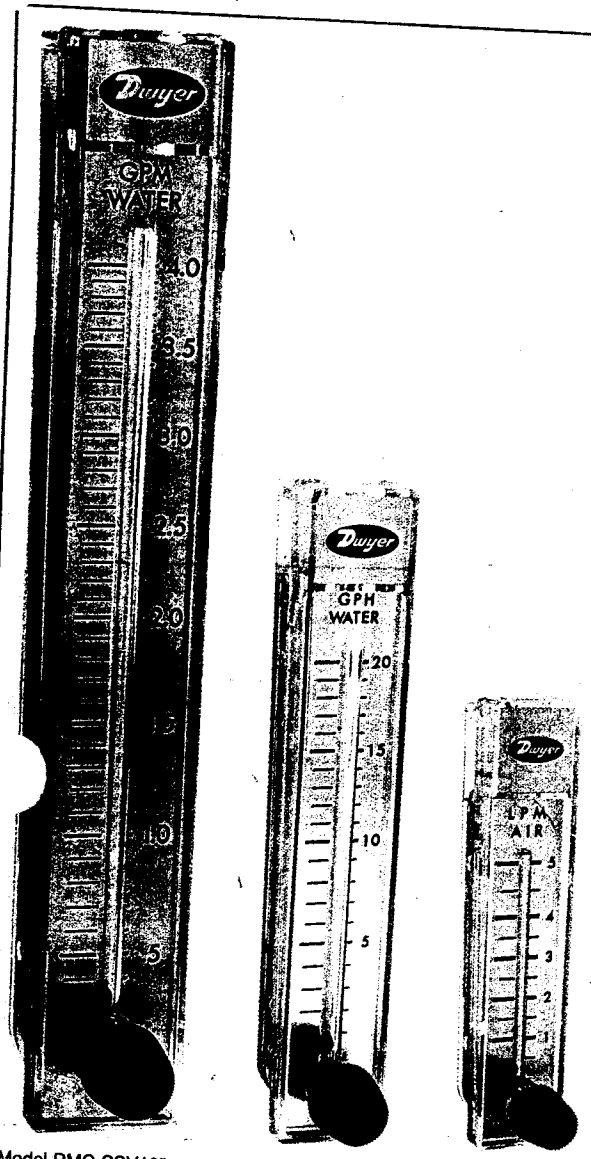

Model RMC-SSV10" scale, 15¾" high

Model RMB-SSV 5" scale, 8¾" high

Model RMA-SSV 2" scale, 4 13/16" high

Molded of tough polycarbonate plastic. Used to indicate or manually control air or gas flow from .1-1800 SCFH . . . water flows to 10 GPM

The Dwyer Rate-Master® line of direct reading precision flowmeters incorporates many unique user features at moderate cost. These low cost flowmeters are ideal for general use.

Easy to read design – The direct reading scales eliminate troublesome conversions. The scales are brushed aluminum, coated with epoxy and the graduations are on both sides of the indicating tube. Special integral flow guides stabilize the float throughout the range to keep it from hunting or wandering in the bore. The float is highly visible against a white background.

Construction assures accuracy – All Rate-Master® flowmeter bodies are injection molded of tough, clear, shatter-proof polycarbonate plastic around a precision tapered pin. Critical internal diameter of the variable orifice tube is held within ±0.0004". The result is accurate and repeatable readings. The single piece plastic body is mounted to a stainless steel back bone into which pipe thread inserts are welded to absorb piping torque. Precision metering valves of brass or stainless steel (specify BV or SSV on order) are available as an optional extra and permit precise flow adjustments. For vacuum applications, Model RMA units are available with top mounted valves (specify TMV). The small Series RMA models are accurate within ±4% of full scale reading; Series RMB within ±3%; large Series RMC within ±2%.

Installation is simple – The Rate-Master® can be neatly through – panel mounted to keep flow tube centers in the same plane as the panel surface or surface mounted on the panel by means of tapped holes in the backbone. When through-panel mounted, the bezel automatically positions the instrument at the correct depth in the panel cutout. Surface mounted units can also be held in place by the piping. All mounting hardware plus installation and operating instructions are included.

Cleaning is easy – To release the plastic flowmeter body from the stainless steel backbone, just remove four screws. Pipe thread flow connections remain undisturbed. Remove the slide cover and the plug ball stop, clean the flow tube with soap and water and reassemble. It's that simple.

Specials — See page 5 for typical examples of special ranges, scales, mounting arrangements, etc., available on special order, or in OEM quantities.

Easy-to-Interchange bodies – Within a given Series, Rate-Master® flowmeter bodies can be instantly interchanged. Simply "unplug" the body from backbone and replace it with another. "O" rings provide a tight seal on inlet and outlet. Piping remains undis-ed. Interchangeability is useful e different scale ranges are times required at the same location in the laboratory or plant.

Top Mounted Metering Valves – Same precision construction for vacuum applications.

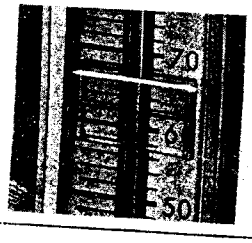

Adjustable pointer flags – Red lined pointer flags provide quick visual reference to a required flow level. Of clear plastic, they snap into place inside bezel and slide to desired level.

Dwyer Instruments, Inc. P.O. Box 373/Michigan City, Indiana 46361/Phone 219 879-8000/Fax 219 872-9057 • U.K. Phone (01494)-461707 • Australia Phone (02) 9756-5355

Meter Body, Be
and Tube
Wetted Metal P
Floats
Float Stops
Pipe Connectio
"O" Rings
Fittings
Rivets
Scale
Knobs
Pressure Ratir
Temperature F
Accuracy
Metering Valv
Top Mounted
Pointer Flag

S	
Model RMA	
Range SCFH Air	
.05-.5	
.1-1	
.2-2	
.5-5	
1-10	
2-20	
5-50	
10-100	
15-150	
20-200	
CC Air/min.	
5-50	
10-100	
30-240	
50-500	
100-1000	
200-2500	
LPM Air	
.5-5	
1-10	
2-25	
5-50	
5-70	
10-100	
CC Water/m	
5-50	
10-110	
20-300	
Gal.Water/	
1-11	
2-24	
4-34	
5-50	

*Accuracy ±

Dwyer
provid
with ai
factory
liquids
glycol)
be use

	SPECIFICATIONS
Meter Body, Bezel and Tube	Polycarbonate
Wetted Metal Parts	Stainless Steel(except for optional brass valves)
Floats	St. Steel, Blk. Glass, Alum., K Monel, Tung. Carbide
Float Stops	Polycarbonate
Pipe Connections	Model RMA, ⅛"; Model RMB, ¼", Model RMC, ½" NPT
"O" Rings	Neoprene and Buna N
Fittings	Stainless Steel brazed to Stainless Steel backbone plate
Rivets	Stainless Steel, set into slots
Scale	Brushed Aluminum-Clear Epoxy Coated
Knobs	ABS Plastic
Pressure Rating	RMA 100 P.S.I., RMB 70 P.S.I., RMC 35 P.S.I. max
Temperature Rating	To 130° F. maximum
Accuracy	Model RMA, 4%; Model RMB 3% Model RMC, 2% of full scale

	OPTIONS AND ACCESSORIES	CODE
Metering Valve	Brass	BV
	Stainless Steel	SSV
Top Mounted Valve	Stainless Steel — available only on RMA for air (vacuum applications)	TMV
Pointer Flag	Polycarbonate	PF

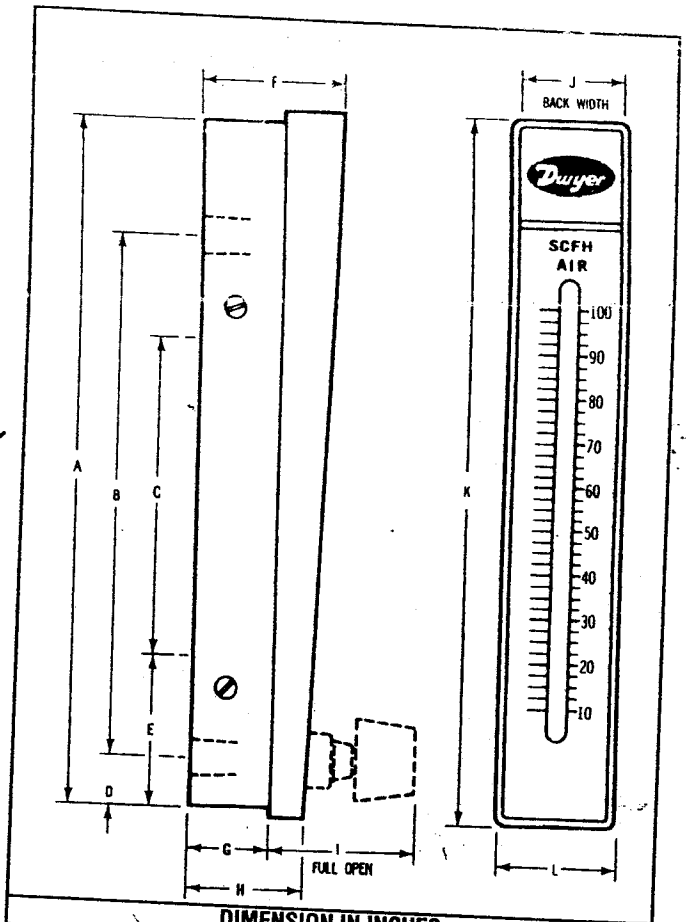

Series RM RATE-MASTER® Models and Ranges

Model RMA-2" Scale		Model RMB-5" Scale		Model RMC -10" Scale	
Range SCFH Air	Ordering No.	Range SCFH Air	Ordering No.	Range SCFH Air	Ordering No.
.05-.5	1	.5-5	49	5-50	101
.1-1	2	1-10	50	10-100	102
.2-2	3	2-20	51	20-200	103
.5-5	4	5-50	52	40-400	104
1-10	5	10-100	53	60-600	105
2-20	6	20-200	54	100-1000	106
5-50	7	40-400	55	120-1200	107
10-100	8	50-500	56	180-1800	108
15-150	9	60-600	57	**SCFM Air**	
20-200	10	**Gal. Water per hour**		1-10	121
CC Air/min.				2-20	122
5-50	151*	1-12	82	3-30	123
10-100	150*	1-20	83		
30-240	11	4-40	84	**Gal. Water per hour**	
50-500	12	10-100	85		
100-1000	13			2-20	134
200-2500	14			8-90	135
LPM Air				**Gal.Water per minute**	
.5-5	26			.1-1	141
1-10	21			.2-2.2	142
2-25	22			.4-4	143
5-50	23			.8-7	144
5-70	24			1.2-10	145
10-100	25				
CC Water/min.					
5-50	32				
10-110	33				
20-300	34				
Gal.Water/hr					
1-11	42				
2-24	43				
4-34	44				
5-50	45				

*Accuracy ±8%. Add $8 to price.

DIMENSION IN INCHES

	Model RMA	Model RMB	Model RMC
A	4 9/16	8½	15¼
B	3 ¼ NPT Conn.	6 7/16 ¼ NPT Conn.	12¼ ½ NPT Conn.
C	1⅝ 10-32 Thds.	3 15/16 ¼-20 Thds.	8¾ ⅜-24 Thds.
D	⅜	⅝	1
E	1 1/16	1¼	2¾
F	1 3/16	1¾	2¼
G	¾	1	1 7/16
H	1	1 7/16	1 31/32
I (OPEN)	1⅜	1 13/16 (BV or SSV MODELS ONLY	2½
J	¾	1¼	2
K	4 13/16	8¾	15¾
L	1	1½	2¼

CAUTION

Dwyer Rate-Master® flowmeters are designed to provide satisfactory long term service when used with air, water, or other compatible media. Refer to factory for information on questionable gases or liquids. Caustic solutions, anti-freeze (ethylene glycol) and aromatic solvents should definitely not be used.

How To Order

1. Select series by letter designation, RMA, RMB or RMC.
2. Add ordering number to specify range. Example: RMB-49.
3. Add suffix BV for brass valve, SSV for stainless steel valve or TMV for top mounted valve (RMA only). Example: RMB-49-SSV
4. For adjustable pointer flag add -APF (RMA), -BPF (RMB) or -CPF (RMC). Example: RMB-49-SSV-BPF

Prices

RMA $18.50
RMA-BV 23.50
RMA-SSV 24.50
RMA-TMV 33.50
RMA-body only ..... net 13.00
*Add to prices above for -150 and -151 ranges 8.50
-APF pointerflag 2.00
-RKA regulator kit 67.00
RMB 28.00
RMB-BV 34.50
RMB-SSV 37.00
RMB-body only ..... net 15.50
-BPF pointer flag 2.00
-RK-RMB regulator kit 67.00
RMC 54.50
RMC-BV 69.50
RMC-SSV 73.50
RMC-body only ..... net 32.00
-CPF pointer flag 2.00

*Add $8 to price.

Appendix C

Vendor Data for Soil Vapor Extraction System Equipment and Instrumentation

- **Vapor Extraction Blower: Roots RAI47**
- **Flow Sensor: Dwyer DS-300**
- **High Temperature Switch: Mercoid FM437**
- **High Pressure Switch: Dwyer 1950P-15 XP**
- **Moisture Separator Overflow Tank High Level Switches: Dwyer L6**
- **Moisture Separator Transfer Pump On/Off Automatic Switches: Dwyer F7**
- **Vacuum Relief Valve: 2” Kunkle Valve**
- **Inline Air Filter: Stoddard Silencers F65-4**
- **Discharge Silencer: Stoddard Silencers Chamber Silencer D13H**
- **Bleed Air Inlet Filter: Stoddard Silencers F64-3**
- **Moisture Separator Transfer Pump: Burks PumpsX3104 G6-2 1/2**

Universal RAI Rotary Positive Blowers

- versatile, economical
- flows to 2370 CFM
- vacuums to 16" Hg

ROOTS DRESSER

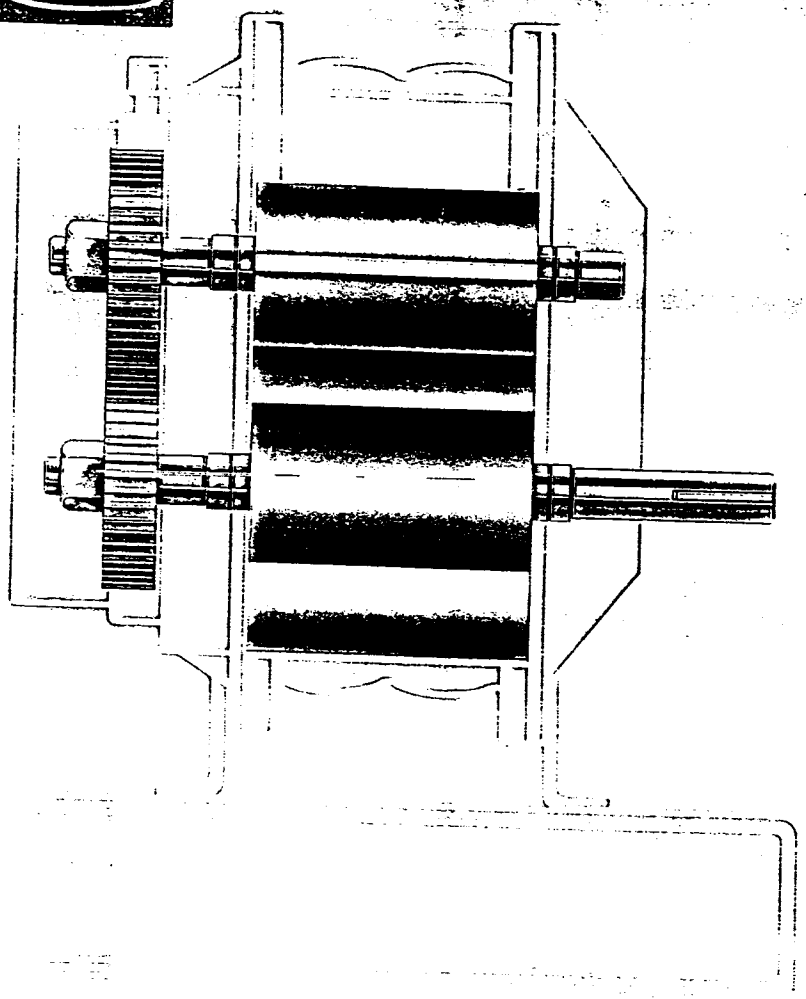

ROOTS

IMPELLING QUALITY

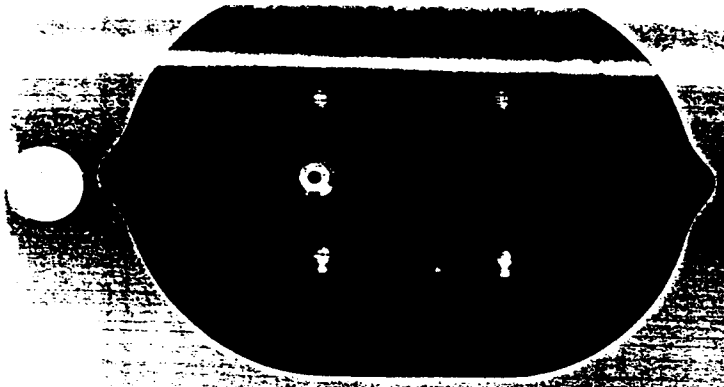

Remarkably adaptable

You can mount the Universal RAI® blower upside down or rightside up, with vertical or horizontal flow, and with the drive shaft rotating in either direction. With 17 frame sizes to choose from, you have the perfect blower to fit your application with little or no modification.

More performance, too

Now the Universal RAI line-up has a broader range and is more rugged than ever, with flows to 2370 CFM, vacuums to 16" Hg and pressures to 15 PSIG. You get a blower that not only fits but gives you the best performance in its class.

Versatile, reliable Roots Universal RAI blower fits your application

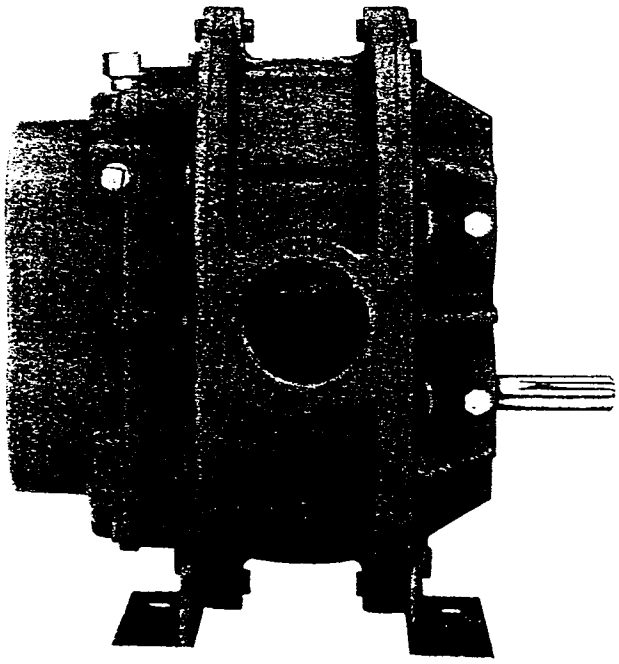

Universal RAI®

Low cost

The Roots Universal RAI® line of blowers is designed with the latest engineering technology and built using the most modern manufacturing processes. This results in cost savings we can pass along to you. This genuine Roots blower can actually cost less than ordinary competitive units.

Built-in reliability

Each Universal RAI blower is precision machined on the latest CNC equipment, assuring close tolerances between the impellers, casing and headplates to minimize "back-slippage" of air, improving efficiency and reliability. Roots exclusive "Figure 8" gearbox design improves oil distribution and lengthens bearing and gear life. Oversize anti-friction bearings support the shafts, and, on the drive end, cylindrical roller bearings will resist V-belt pull and extend service life.

Fast delivery

Thanks to over 45 stocking centers throughout North America, you'll get on-time delivery. You can schedule production, reduce your inventory, anticipate your costs—and meet your deadlines.

Better service

With nearly 100 sales and distribution locations, only Roots can offer the kind of responsive service and applications assistance that the industry's largest service network provides.

Iron-clad warranty

Roots is the leader in warranties, too—the first to introduce an uncontested warranty that guarantees repair or replacement of any unit that malfunctions for any reason. We'll protect you or your customer for a full 18 months after installation (not to exceed 24 months after shipment).

Greater pressure and flow with proven reliability

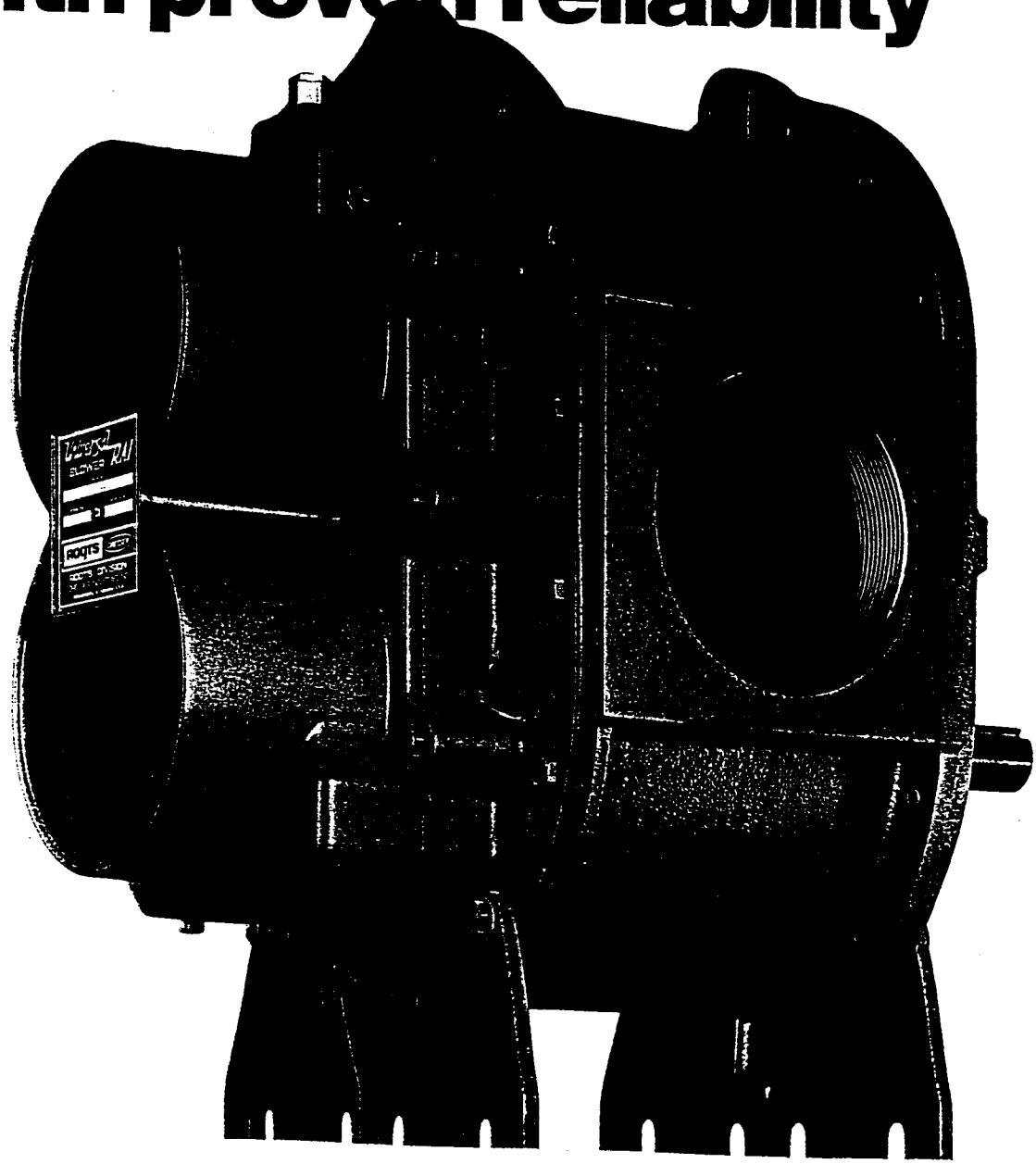

You get increased performance through Roots' extensive improvement program and life testing. Here's how...

1. Exclusive gearbox design

"Figure 8" gearbox actually improves oil distribution for longer gear and bearing life with smoother operation.

2. Taper mounted timing gears

Carburized and ground alloy steel gears are precision machined and taper fitted to alloy steel shafts, eliminating the need for unreliable timing pins.

3. Original Roots impeller design

Dynamically balanced Roots impellers are center-timed to allow either clockwise or counterclockwise rotation.

4. Long-life anti-friction bearings

Oversize cylindrical roller bearings at the drive shaft handle V-belt stress; all bearing points are engineered for long service life.

5. Versatile mounting

You can mount the Universal RAI® in multiple positions to accommodate your specific needs. With your choice of 17 frame sizes, there's a Universal RAI that fits right into your OEM or replacement application.

6. Rugged steel mounting feet

The Universal RAI can be easily changed from horizontal flow to vertical flow using the same mounting feet. They're even interchangeable with the mounting holes of competitive Roots-type blowers.

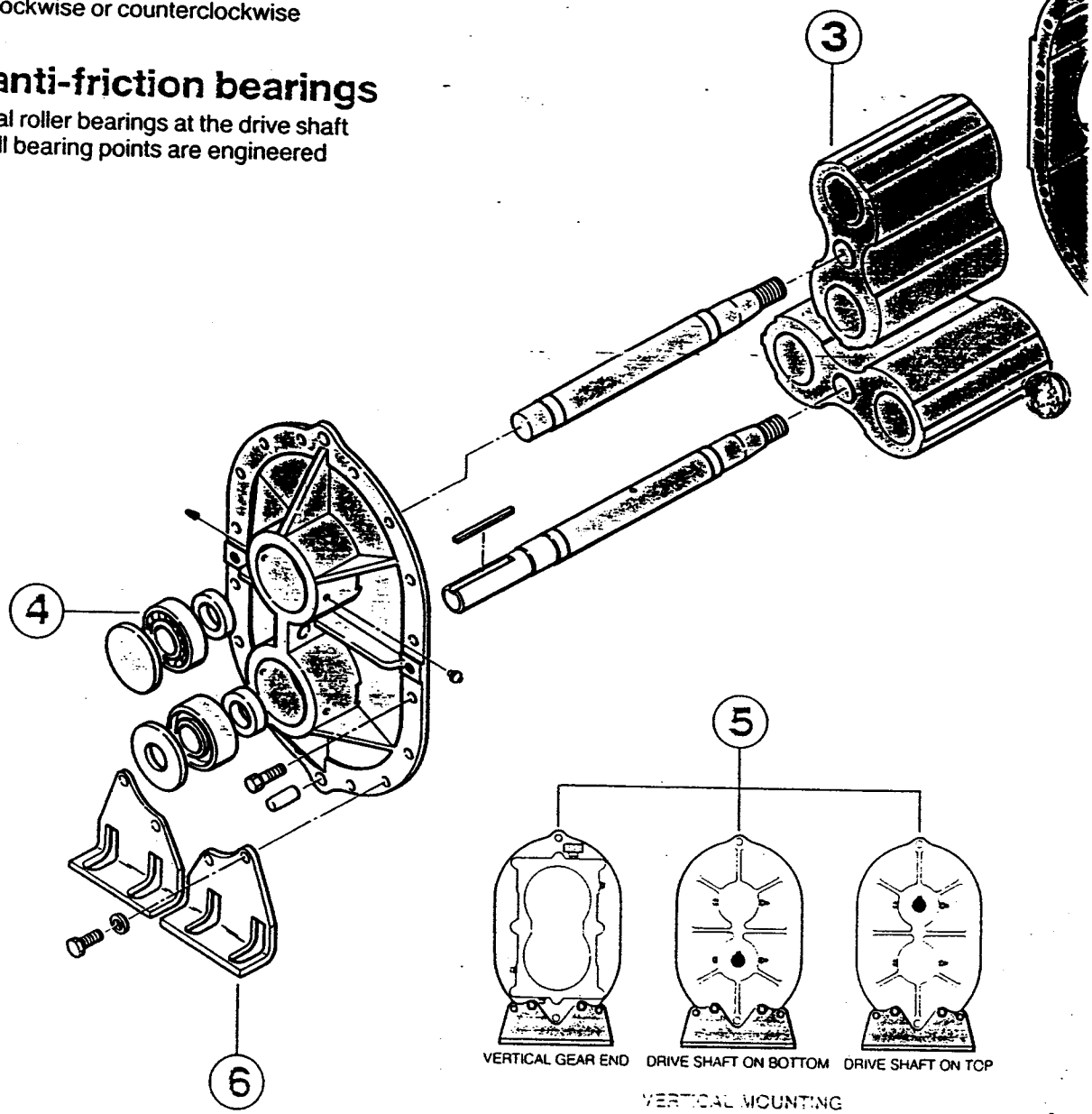

VERTICAL MOUNTING
(Horizontal air flow)

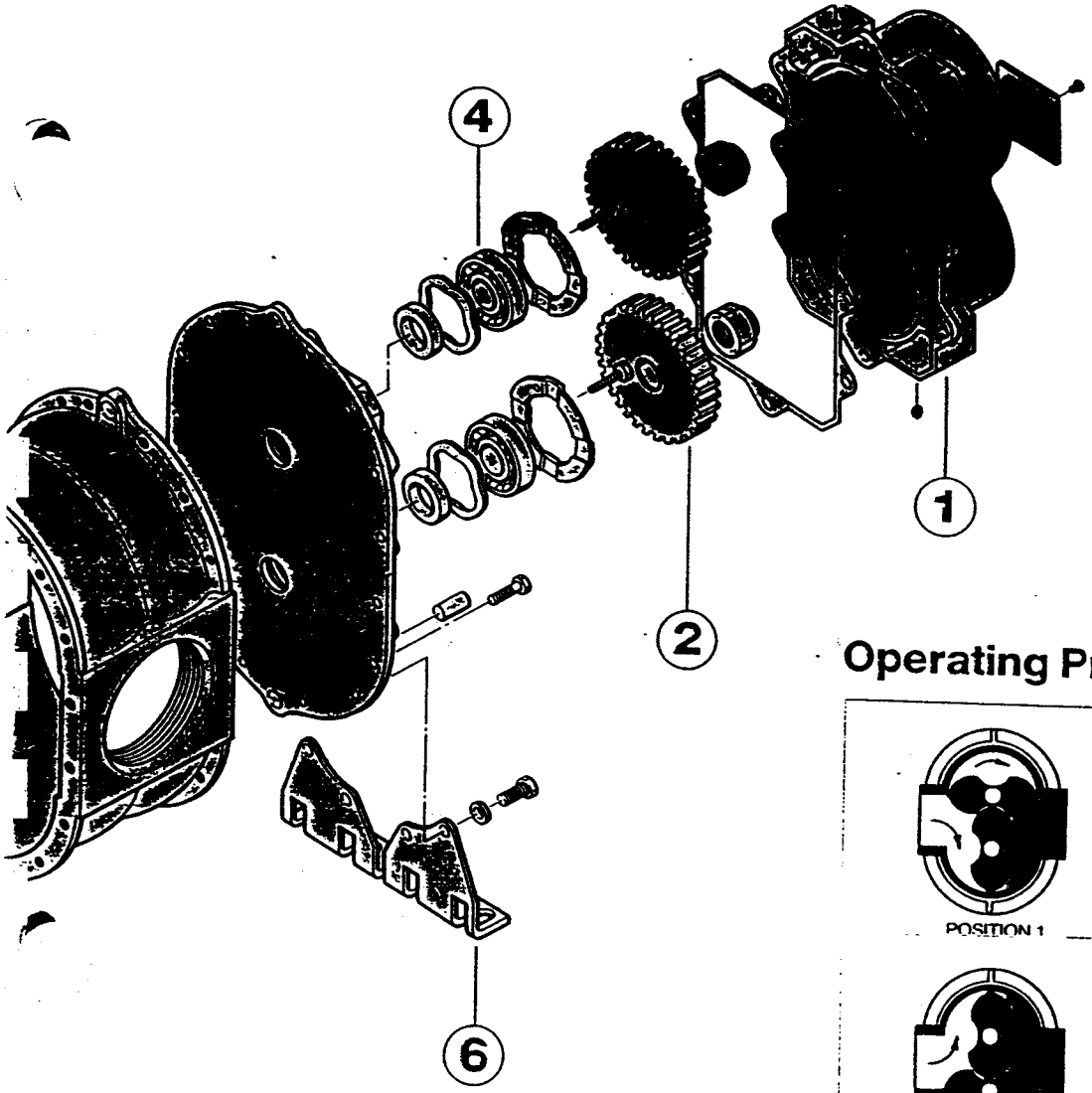

Operating Principle

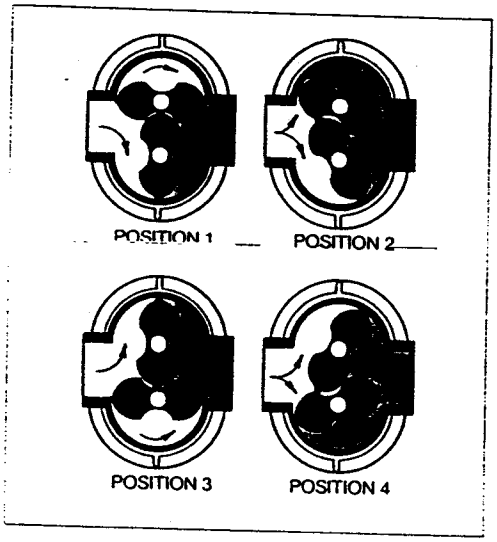

Two "Figure 8" lobe impellers, mounted on parallel shafts, rotate in opposite directions. As each impeller passes the blower inlet, it traps a definite volume of air and carries it around the case to the blower outlet, where the air is discharged. With constant speed operation, the displaced volume is essentially the same regardless of pressure, temperature or barometric pressure.

Timing gears control the relative position of the impellers to each other and maintain small but definite clearances. This allows operation without lubrication being required inside the air casing.

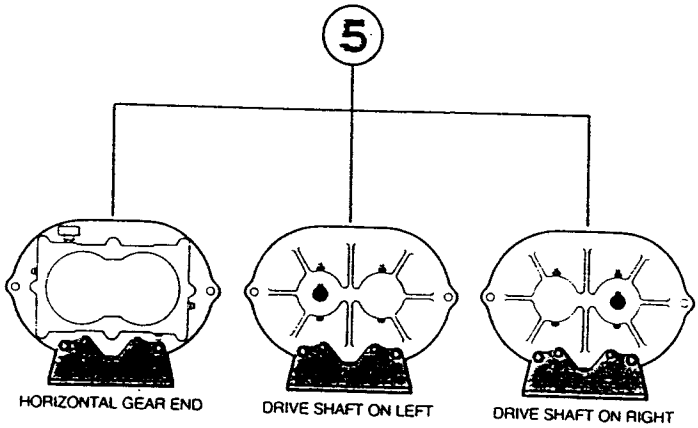

HORIZONTAL MOUNTING
(Vertical air flow)

Performance Specifications

Universal RAI® Pressure table

ROOTS DRESSER

Frame Size	Speed RPM	1 PSI		2 PSI		4 PSI		6 PSI		7 PSI		8 PSI		10 PSI		12 PSI		15 PSI	
		CFM	BHP	CFM	BHP	CFM	BHP	CFM	BHP	CFM	BHP	CFM	BHP	CFM	BHP	CFM	BHP	CFM	BHP
22	1160	10	0.2	7	0.3	2	0.4												
	3600	49	0.6	46	0.8	41	1.3	38	1.8	36	2.1	35	2.3	32	2.8	29	3.3		
	5275	76	0.8	73	1.2	68	1.9	64	2.7	63	3.1	61	3.4	59	4.2	56	4.9		
24	1160	24	0.3	19	0.4	11	0.8												
	3600	102	0.8	97	1.3	89	2.3	83	3.3	81	3.8								
	5275	156	1.2	150	1.9	143	3.4	137	4.9	135	5.6								
32	1160	40	0.4	34	0.6	27	1.1	21	1.6	19	1.8	17	2.0						
	2800	113	1.0	108	1.6	101	2.7	95	3.8	93	4.3	90	4.9	86	6.0	82	7.1	77	8.7
	3600	149	1.3	144	2.0	137	3.4	131	4.8	129	5.5	126	6.2	122	7.7	118	9.1	113	11.2
33	1160	55	0.5	48	0.8	39	1.4	31	2.1	28	2.4								
	2800	156	1.2	149	2.0	140	3.5	132	5.0	129	5.7	126	6.5	120	8.0	116	9.5		
	3600	205	1.6	199	2.5	189	4.5	181	6.4	178	7.4	175	8.3	170	10.3	165	12.2		
36	1160	95	0.7	85	1.2	72	2.3	61	3.3	57	3.8								
	2800	262	1.7	253	3.0	239	5.4	229	7.9	224	9.2								
	3600	344	2.2	334	3.8	321	7.0	310	10.2	306	11.8								
42	860	38	0.4	32	0.6	24	1.1	18	1.5	15	1.8								
	1760	92	0.8	87	1.3	78	2.2	72	3.1	69	3.6	67	4.1	62	5.0	58	5.9		
	3600	204	1.7	198	2.6	190	4.5	183	6.4	181	7.4	178	8.3	173	10.2	169	12.1	163	15.0
45	860	79	0.6	68	1.1	53	2.0	42	2.9	37	3.4								
	1760	188	1.3	177	2.2	162	4.1	151	5.9	146	6.9	141	7.8	133	9.6				
	3600	410	2.6	400	4.5	385	8.3	374	12.1	369	14.0	364	15.9	356	19.7				
47	860	109	0.8	97	1.4	81	2.6	68	3.8	63	4.4								
	1760	253	1.6	241	2.8	225	5.3	212	7.7	206	8.9								
	3600	546	3.2	535	5.7	518	10.7	505	15.8	500	18.3								
53	700	72	0.6	63	1.0	51	1.8	42	2.6	38	3.0								
	1760	211	1.5	203	2.6	191	4.6	181	6.6	177	7.6	173	8.6	167	10.7	160	12.7		
	2850	355	2.5	346	4.1	334	7.4	325	10.7	321	12.3	317	14.0	310	17.2	304	20.5	295	25.4
56	700	123	0.9	110	1.6	92	2.9	78	4.3	72	4.9	66	5.6						
	1760	358	2.2	345	3.9	326	7.3	312	10.7	306	12.4	300	14.1	290	17.5				
	2850	598	3.6	585	6.4	567	11.9	553	17.3	547	20.1	541	22.8	531	28.3				
59	700	187	1.2	170	2.2	147	4.2	130	6.1										
	1760	529	3.0	513	5.5	490	10.5	472	15.4	464	17.9								
	2850	881	4.9	865	8.9	842	16.9	824	25.0	816	29.0								
65	700	140	1.0	126	1.8	107	3.3	93	4.8	86	5.5	80	6.3	70	7.8				
	1760	400	2.6	387	4.5	368	8.3	353	12.1	347	14.0	341	15.8	330	19.6	320	23.4	307	29.1
	2350	546	3.5	532	6.0	513	11.1	499	16.1	492	18.6	486	21.1	475	26.2	466	31.2	452	38.8
63	700	224	1.5	203	2.7	172	5.1	149	7.5	139	8.7	129	9.9						
	1760	643	3.8	621	6.8	591	12.9	567	18.9	557	22.0	548	25.0	530	31.0	515	37.1		
	2350	876	5.0	855	9.1	824	17.2	801	25.3	790	29.3	781	33.4	763	41.5	748	49.6		
[illegible]	700	420	2.6	380	4.8	323	9.3	279	13.8										
	1760	1205	6.4	1164	12.1	1107	23.5	1063	34.8										
	2350	1641	8.6	1601	16.1	1544	31.3	1500	46.5										
[illegible]	575	195	1.3	179	2.3	158	4.3	142	6.4	134	7.4	128	8.4	115	10.4				
	1400	526	3.2	511	5.7	490	10.6	473	15.5	466	17.9	459	20.4	447	25.3	436	30.2	421	37.6
	2050	788	4.7	772	8.3	751	15.5	734	22.7	727	26.3	721	29.9	708	37.1	697	44.2	682	55.0
[illegible]	575	362	2.2	336	4.0	299	7.7	271	11.4	258	13.3	247	15.1	226	18.8				
	1400	970	5.3	944	9.8	908	18.8	880	27.8	867	32.3	856	36.8	835	45.8				
	2050	1450	7.7	1424	14.3	1387	27.5	1359	40.7	1347	47.3	1335	53.9	1315	67.1				
[illegible]	575	600	3.3	563	6.3	510	12.3	470	18.4										
	1400	1590	8.1	1553	15.4	1500	30.1	1460	44.7										
	2050	2370	11.9	2333	22.6	2280	44.0	2240	65.5										

Ratings based on inlet air at standard temperature of 68°F, ambient pressure of 14.7 psia and specific gravity of 1.0.

Universal RAI® Vacuum table

ROOTS DRESSER

Frame Size	Speed RPM	4" Hg Vacuum		6" Hg Vacuum		8" Hg Vacuum		10" Hg Vacuum		12" Hg Vacuum		14" Hg Vacuum		15" Hg Vacuum		16" Hg Vacuum	
		CFM	BHP	CFM	BHP	CFM	BHP	CFM	BHP	CFM	BHP	CFM	BHP	CFM	BHP	CFM	BHP
22	1160	6	0.3														
	3600	45	0.8	42	1.1	39	1.3	35	1.6	32	1.8	28	2.0				
	5275	72	1.2	69	1.6	66	1.9	62	2.3	59	2.6	55	3.0				
24	1160	18	0.4	12	0.6												
	3600	96	1.3	90	1.8	85	2.3	80	2.8	75	3.3	69	3.8				
	5275	149	1.9	144	2.6	139	3.4	134	4.1	128	4.8	122	5.5				
32	1160	33	0.6	28	0.9	23	1.1	18	1.3								
	2800	107	1.5	102	2.1	97	2.6	92	3.1	87	3.7	81	4.2	78	4.5		
	3600	143	2.0	138	2.7	133	3.4	128	4.0	123	4.7	117	5.4	114	5.8		
33	1160	47	0.8	40	1.1	33	1.4	27	1.7								
	2800	148	1.9	141	2.7	134	3.4	128	4.1	121	4.9	113	5.6				
	3600	197	2.5	190	3.4	184	4.4	177	5.3	170	6.3	163	7.2				
36	1160	83	1.2	74	1.7	65	2.2	55	2.7								
	2800	251	2.9	241	4.1	232	5.3	223	6.6	213	7.8						
	3600	332	3.7	323	5.3	313	6.9	304	8.4	294	10.0	284	11.6				
42	860	31	0.6	25	0.8	19	1.1										
	1760	85	1.3	79	1.7	74	2.2	68	2.6	62	3.1	56	3.5				
	3600	197	2.6	191	3.5	185	4.4	180	5.4	174	6.3	167	7.2				
45	860	66	1.1	56	1.5	46	1.9										
	1760	175	2.2	164	3.1	154	4.0	144	4.9	134	5.8						
	3600	398	4.4	387	6.3	377	8.2	367	10.0	356	11.9	345	13.7				
47	860	95	1.3	83	1.9	72	2.5										
	1760	239	2.8	227	3.9	216	5.1	205	6.3	193	7.5						
	3600	532	5.6	520	8.1	509	10.5	498	13.0	486	15.4	473	17.9				
53	700	61	1.0	53	1.4	44	1.8	36	2.2								
	1760	201	2.5	192	3.5	184	4.5	176	5.5	167	6.5	158	7.5				
	2850	345	4.1	336	5.7	328	7.3	320	8.9	311	10.5	301	12.1				
56	700	108	1.5	95	2.2	82	2.9	70	3.5								
	1760	342	3.9	329	5.5	316	7.2	304	8.8	291	10.5	276	12.1				
	2850	583	6.2	570	8.9	557	11.6	545	14.3	532	17.0	517	19.7				
59	700	167	2.1	151	3.1	135	4.1										
	1760	509	5.4	493	7.8	477	10.2	462	12.7	445	15.1						
	2850	861	8.7	845	12.6	829	16.6	814	20.5	797	24.4	779	28.3				
65	700	123	1.8	110	2.5	97	3.2	84	4.0	71	4.7						
	1760	384	4.4	371	6.3	358	8.1	345	10.0	331	11.8	317	13.7	308	14.6	300	15.5
	2350	529	5.9	516	8.4	503	10.8	490	13.3	476	15.8	462	18.2	454	19.5	445	20.7
68	700	198	2.7	177	3.8	156	5.0	135	6.2								
	1760	617	6.7	595	9.6	575	12.6	554	15.6	532	18.5	508	21.5	495	23.0		
	2350	850	8.9	828	12.9	808	16.8	787	20.8	765	24.7	741	28.7	728	30.7	715	32.6
615	700	371	4.7	331	6.9	292	9.1										
	1760	1156	11.8	1115	17.4	1077	23.0	1038	28.5	997	34.1						
	2350	1592	15.8	1552	23.2	1513	30.6	1474	38.1	1433	45.5						
76	575	176	2.3	161	3.3	147	4.3	132	5.2	117	6.2						
	1400	508	5.6	493	8.0	478	10.4	464	12.8	448	15.2	432	17.6	423	18.8	413	20.0
	2050	769	8.2	754	11.7	740	15.2	725	18.7	710	22.2	693	25.7	684	27.5	674	29.2
711	575	330	3.9	304	5.7	279	7.6	254	9.4	228	11.2						
	1400	939	9.6	913	14.0	888	18.4	863	22.8	837	27.2	808	31.6	793	33.8		
	2050	1419	14.0	1393	20.5	1368	26.9	1343	33.4	1317	39.8	1288	46.3	1272	49.5	1256	52.7
713	575	555	6.2	517	9.1	482	12.1	446	15.0								
	1400	1545	15.1	1507	22.3	1472	29.4	1436	36.6	1398	43.8						
	2050	2325	22.1	2287	32.6	2252	43.1	2216	53.6	2178	64.1						

Ratings based on inlet air at standard temperature of 68°F, discharge pressure of 30" Hg and specific gravity of 1.0.

Frame sizes

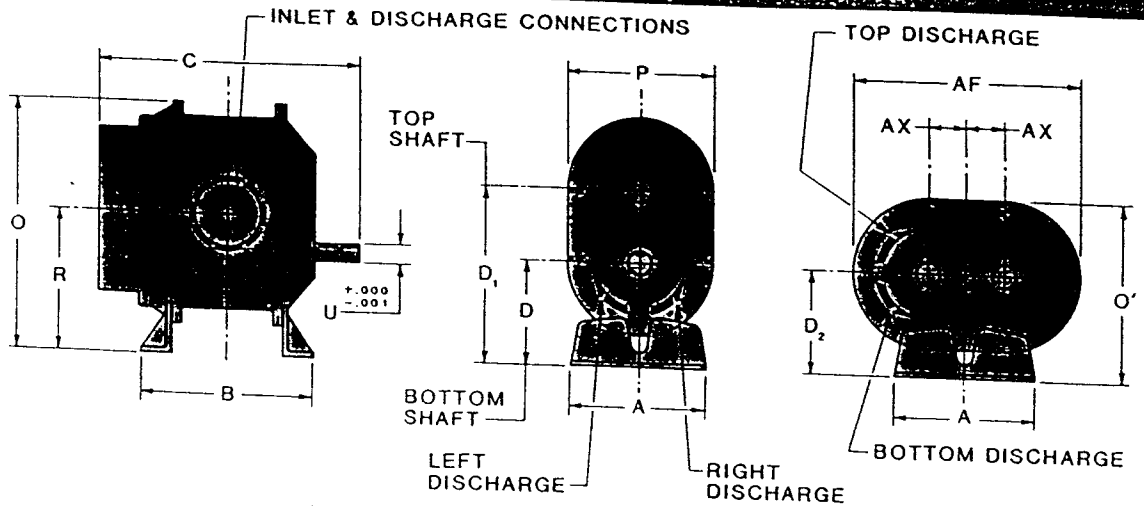

Frame Size	A	B	C	Drive Shaft Location D Bottom Shaft	D_1 Top Shaft	D_2 Horiz. Shaft	O	O'	P	R	U	Keyway	Inlet & Disch. Dia.	AF	AX	Approx. Net Wt. (Lbs.)
22	5.13	5.00	9.75	3.75	6.25	3.75	9.63	6.88	6.25	5.00	.625	.188 x .094	1.0 NPT	9.25	1.25	32
24	5.13	7.00	11.75	3.75	6.25	3.75	9.63	6.88	6.25	5.00	.625	.188 x .094	2.0 NPT	9.25	1.25	43
32	7.25	6.75	11.25	5.00	8.50	5.00	12.81	8.88	7.75	6.75	.750	.188 x .094	1.25 NPT	12.13	1.75	69
33	7.25	7.63	12.13	5.00	8.50	5.00	12.81	8.88	7.75	6.75	.750	.188 x .094	2.0 NPT	12.13	1.75	74
36	7.25	10.00	14.63	5.00	8.50	5.00	12.81	8.88	7.75	6.75	.750	.188 x .094	2.5 NPT	12.13	1.75	102
42	8.00	7.25	13.00	6.25	10.25	6.25	15.06	10.63	8.75	8.25	.875	.188 x .094	1.5 NPT	13.63	2.00	88
45	8.00	10.00	15.50	6.25	10.25	6.25	15.06	10.63	8.75	8.25	.875	.188 x .094	2.5 NPT	13.63	2.00	109
47	8.00	11.75	17.63	6.25	10.25	6.25	15.06	10.50	8.50	8.25	.875	.188 x .094	3.0 NPT	13.63	2.00	126
53	10.50	8.38	15.38	6.25	11.25	6.75	17.38	11.88	10.25	8.75	1.125	.250 x .125	2.5 NPT	17.25	2.50	143
56	10.50	11.00	18.00	6.25	11.25	6.75	17.38	12.25	11.00	8.75	1.125	.250 x .125	4.0 NPT	17.25	2.50	170
59	10.50	14.00	21.18	6.25	11.25	6.75	17.38	12.25	11.00	8.75	1.125	.250 x .125	4.0 NPT	17.25	2.50	204
65	11.00*	10.00	18.38	8.75	14.75	8.75	21.63	15.13	12.75	11.75	1.375	.312 x .156	3.0 NPT	19.75	3.00	245
68	11.00*	13.00	21.38	8.75	14.75	8.75	21.63	15.13	12.75	11.75	1.375	.312 x .156	5.0 NPT	19.75	3.00	285
615	11.00*	20.00	28.38	8.75	14.75	8.75	21.63	16.25	15.00	11.75	1.375	.312 x .156	6.0 FLG	19.75	3.00	425
76	14.00**	11.75	19.94	11.00	18.00	11.00	26.13	20.69	19.38	14.50	1.562	.375 x .188	4.0 NPT	23.25	3.50	400
711	14.00**	16.75	25.19	11.00	18.00	11.00	26.13	19.50	17.00	14.50	1.562	.375 x .188	6.0 FLG	23.25	3.50	530
718	14.00**	23.75	32.19	11.00	18.00	11.00	26.13	19.50	17.00	14.50	1.562	.375 x .188	8.0 FLG	23.25	3.50	650

*17.00 in horizontal configuration
**21.00 in horizontal configuration

All dimensions in inches

BARNEY'S PUMPS INC. (Ft L'dale)
12080 NW 40th Street
Coral Springs, FL 33065
Brwd: 305/346-0669
Dade: 305/945-0279

ROOTS DRESSER

M P E L L I N G Q U A L I T Y

Dresser Industries, Inc.
ROOTS DIVISION
900 West Mount Street, Connersville, Indiana 47331
Phone 317/827-9200 FAX 317/825-7669

Revised 5/92 B-5125 © 1992 Dresser Industries, Inc. Printed in U.S.A.

ROOTS DIVISION
DRESSER INDUSTRIES, INC.
CONNERSVILLE, IN. 47331
PRINTED IN U.S.A.

PERFORMANCE BASED ON 68°F
INLET AIR & DISCHARGE
PRESSURE - 30" HG ABS

JUNE 1990

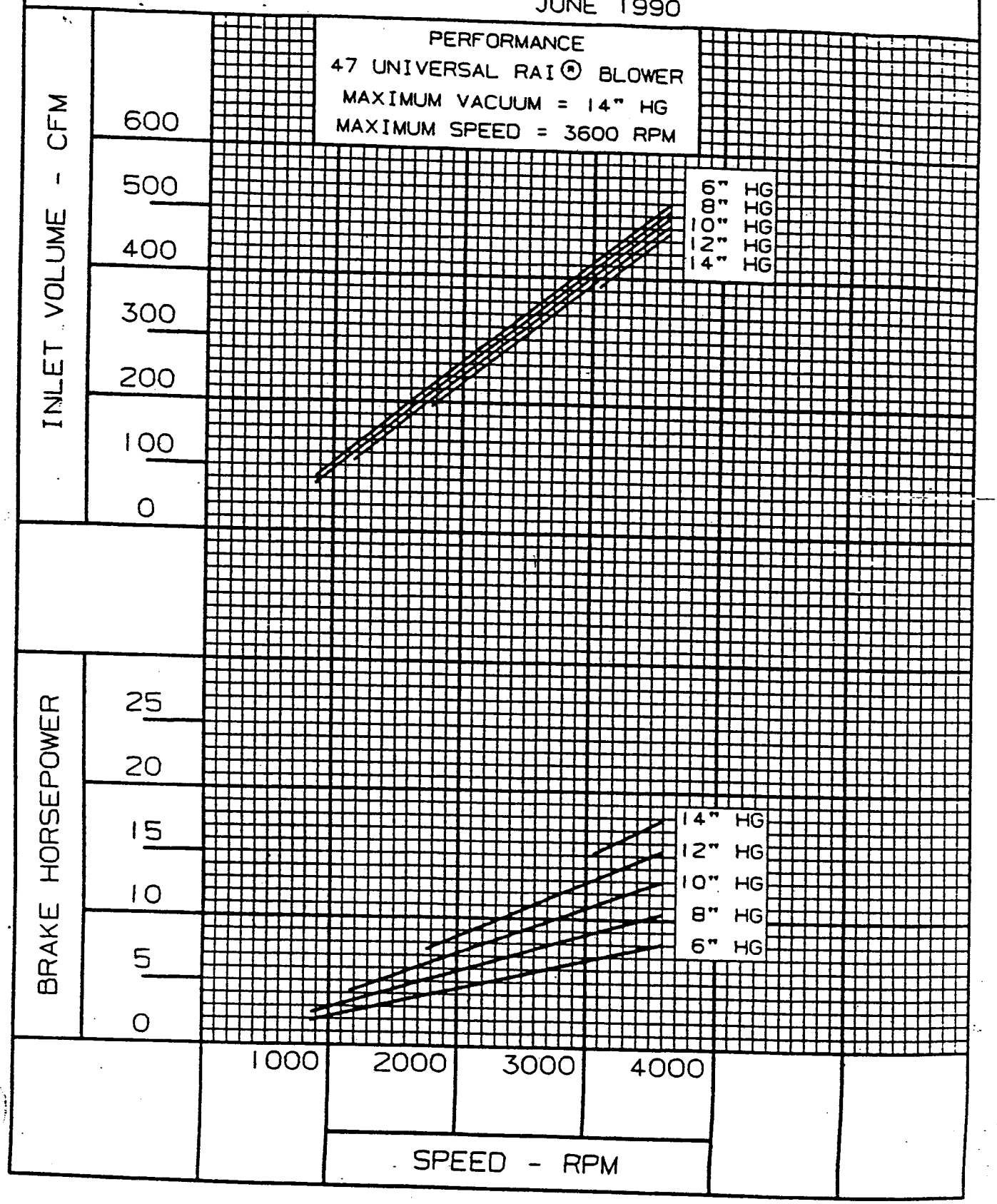

VC-12-47

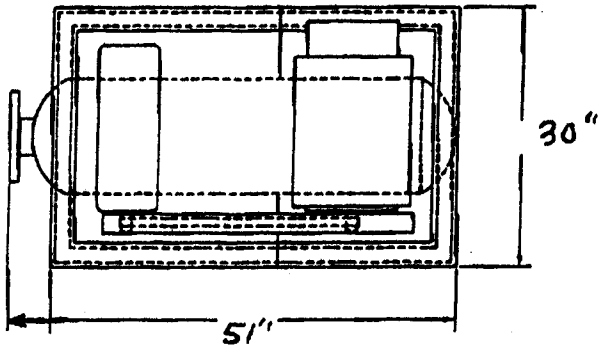

BILL OF MATERIALS

A ROOTS BLOWER, 47-URAI - Vacuum Service
B MOTOR, 15 HP 3600 RPM TEFC 254T X-proof
C DISCHARGE SILENCER, ø 3" Stoddard D13H.3
D INTAKE FILTER, ø 4" Stoddard Inline F65V.4
E V-BELTS, GUARD
F EXPANSION JOINT, ø 3"
G KUNKLE RELIEF VALVE, ø 2"

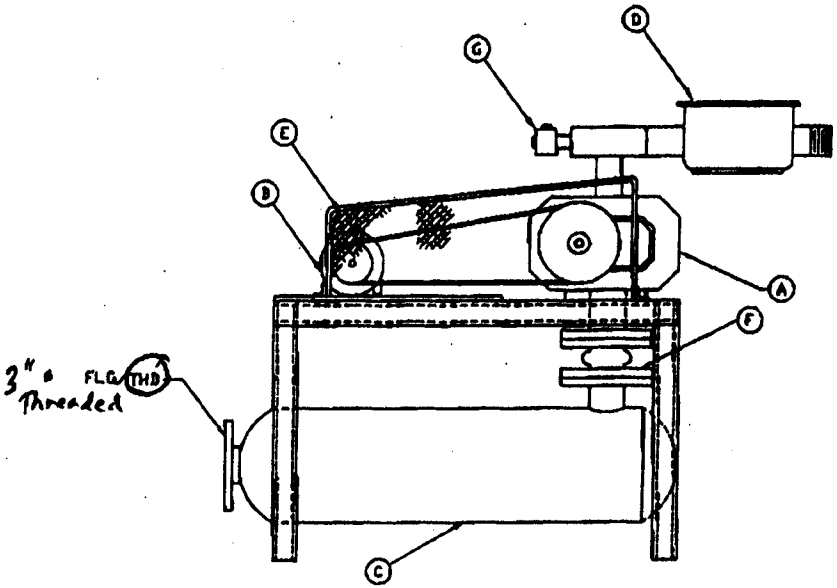

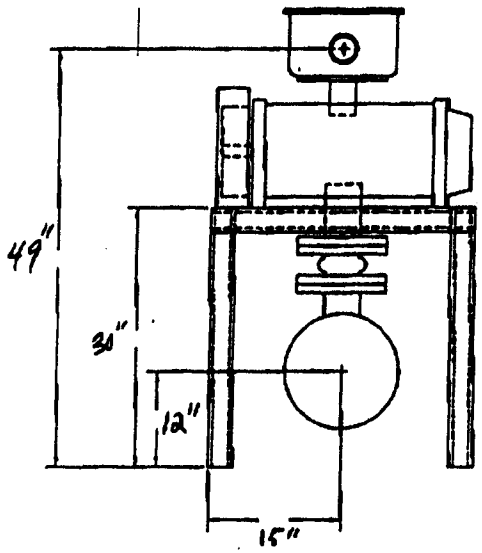

PROJ: Roots Blower Pkg
CUST: Engineered Enviro.

BARNEY'S PUMPS, INC.
12080 NW 40th ST
CORAL SPRINGS, FL 33065
(954) 346-0669
FAX: (954) 346-0993

DATE: 10/5/99	BP Inc
REV. DATE: 1/19/00	DRAWN BY: JC
REV. DATE:	DRAWING In tubebase
REV. DATE:	PAGE: 1 OF 1

47 URAI: Variable Speed Performance

ROOTS DIVISION, DRESSER EQUIPMENT GROUP

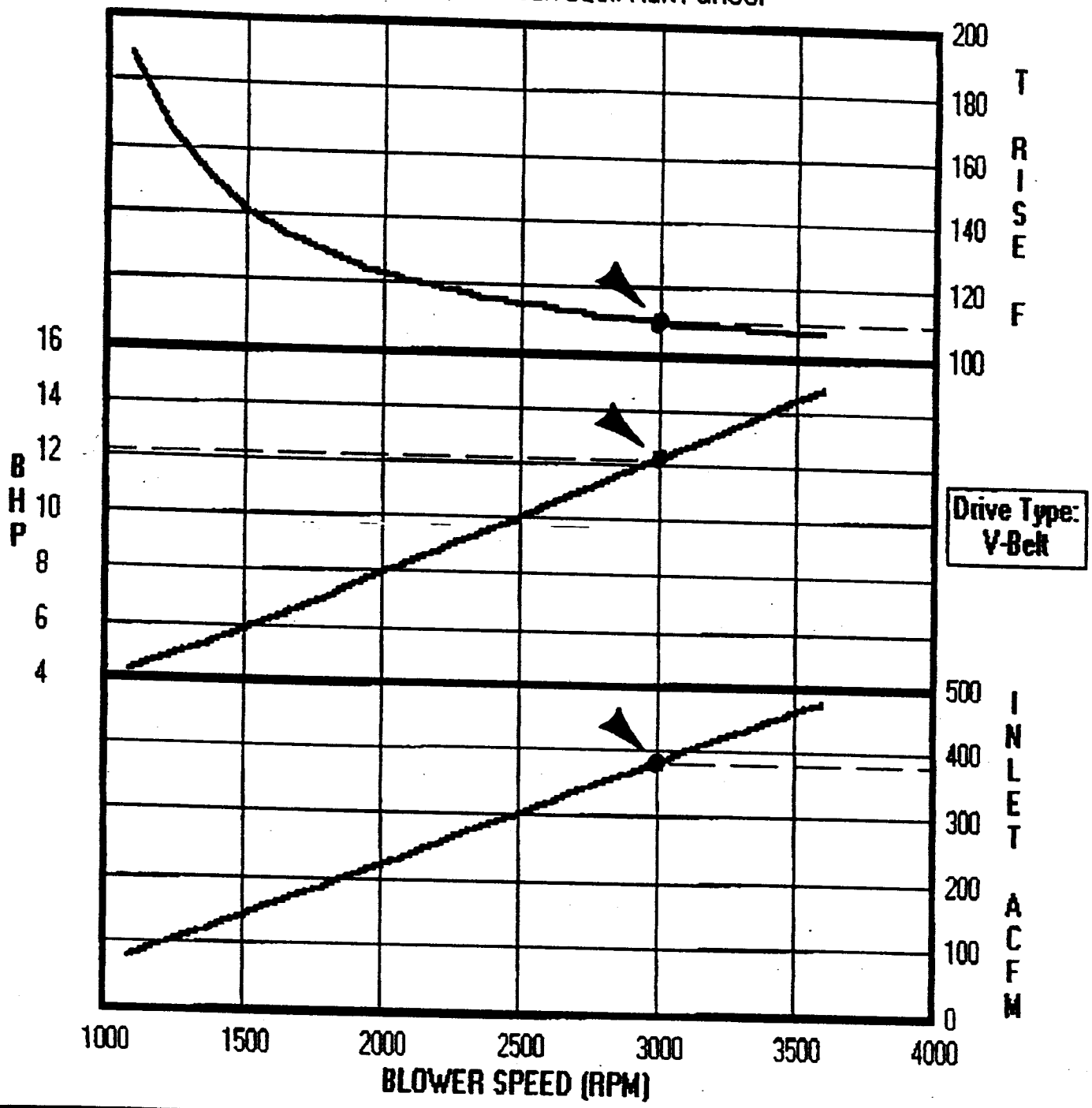

COND'S: AIR
RH = 95.00%, MW = 27.918, k = 1.383, Tin = 100 deg F
DESIGN: Speed = 3000 RPM
System Inlet P = 11 in Hg Vac
System Disch P = 14.7 PSIA

DRESSER ROOTS

ISO 9001 CERTIFIED ROOTS QUALITY SYSTEM

Universal RAI® BLOWER

Universal RAI-J®

INSTRUCTIONS

ROTARY LOBE BLOWERS

CONTENTS

NUMBERS IN ( ) ARE METRIC EQUIVALENTS

INFORMATION SUMMARY ..... This page
Receiving. . .Installing. . .Operating

OPERATING CHARACTERISTICS 2
Description. . .Control. . .Protection

OPERATING LIMITATIONS 2
Pressure. . .Temperature. . .Speed

BLOWER ORIENTATION 3

INSTALLATION 5
Mounting. . .Aligning. . .Piping

LUBRICATION 7
Oil Fill. . .Servicing. . .Greasing

OPERATION 8
Starting. . .Checking. . .Running

TROUBLE SHOOTING 9
Capacity. . .Power. . .Heating

SAFETY PRECAUTIONS 10
Physical. . .Operating. . .General

MAINTENANCE/REPLACEMENTS 10
Servicing. . .Repairs. . .Clearances

PARTS DRAWINGS 14

SALES OFFICES 24

DO THESE THINGS To Get The Most From Your Roots Blower

1 Check shipment for damage. If found, file claim with carrier and notify Sales Office.

2 Unpack shipment carefully, and check contents against Packing List. Notify Sales Office if a shortage appears.

3 Store in a clean, dry location until ready for installation, if possible. Lift by methods discussed under INSTALLATION to avoid straining or distorting the equipment. Keep covers on all openings. Protect against weather and corrosion if outdoor storage is necessary.

4 Read LIMITATIONS and INSTALLATION sections in this manual and plan the complete installation.

5 Provide for adequate safeguards against accidents to persons working on or near the equipment during both installation and operation. See SAFETY PRECAUTIONS.

6 Install all equipment correctly. Foundation design must be adequate and piping carefully done. Use recommended accessories for operating protection.

7 Make sure both driving and driven equipment is correctly lubricated before start-up. See LUBRICATION.

8 Read starting check points under OPERATION. Run equipment briefly to check for installation errors and make corrections. Follow with a trial run under normal operating conditions.

9 In event of trouble during installation or operation, do not attempt repairs of Roots furnished equipment. Notify Sales Office or factory, giving all nameplate information plus an outline of operating conditions and a description of the trouble.

10 Unauthorized attempts at equipment repair may void Manufacturer's warranty. Units out of warranty may be repaired or adjusted by the owner. It is recommended that such work be limited to the operation described in this manual, using Factory Parts. Good inspection and maintenance practices should reduce the need for repairs. See Sales Office List on last page for parts and service after warranty period.

NOTE — Information in this manual is correct as of the date of publication. The Manufacturer reserves the right to make design or material changes without notice, and without obligation to make similar changes on equipment of prior manufacture.

OPERATING CHARACTERISTICS

Roots UNIVERSAL RAI® and UNIVERSAL RAI-J® blowers, as covered in this manual, are designated as air blowers, and may be used for handling air in either pressure or vacuum service. They are unsuitable for handling gases because shaft seals are not designed to prevent leakage to atmosphere.

The Roots rotary lobe blower is a positive displacement type unit, whose pumping capacity is determined by size, operating speed and pressure conditions. It employs two double-lobe impellers mounted on parallel shafts and rotating in opposite directions within a cylinder closed at the ends by headplates. As the impellers rotate, air is drawn into one side of the cylinder and forced out the opposite side against the existing pressures. The differential pressure developed, therefore, depends on the resistance of the connected systems.

Effective sealing of the blower inlet area from the discharge area is accomplished by use of very small operating clearances. Resulting absence of moving contacts eliminates the need for any internal lubrication. Clearances between the impellers during rotation are maintained by a pair of accurately machined timing gears, mounted on the two shafts extending outside the air chamber.

Operation of the familiar basic rotary lobe blower is illustrated in FIGURE 1, where air flow is right to left from inlet to discharge with the bottom impeller rotating clockwise. In Position 1 it is delivering a known volume (A) to the discharge, while space (B) between the upper impeller and cylinder wall is being filled. Counterclockwise rotation of this impeller then traps equal volume (B) in Position 2, and further rotation delivers it to the discharge in Position 3. At the same time, another similar volume is forming under the lower impeller, and will be discharged when rotation reaches Position 1 again.

One complete revolution of the driving shaft alternately traps four equal and known volumes of air (two by each impeller) and pushes them through to the discharge. The pumping capacity of a lobe blower operating at a constant speed therefore remains relatively independent of reasonable inlet or discharge pressure variations. To change capacity, it is necessary either to change speed of rotation or vent some of the air.

No attempt should ever be made to control capacity

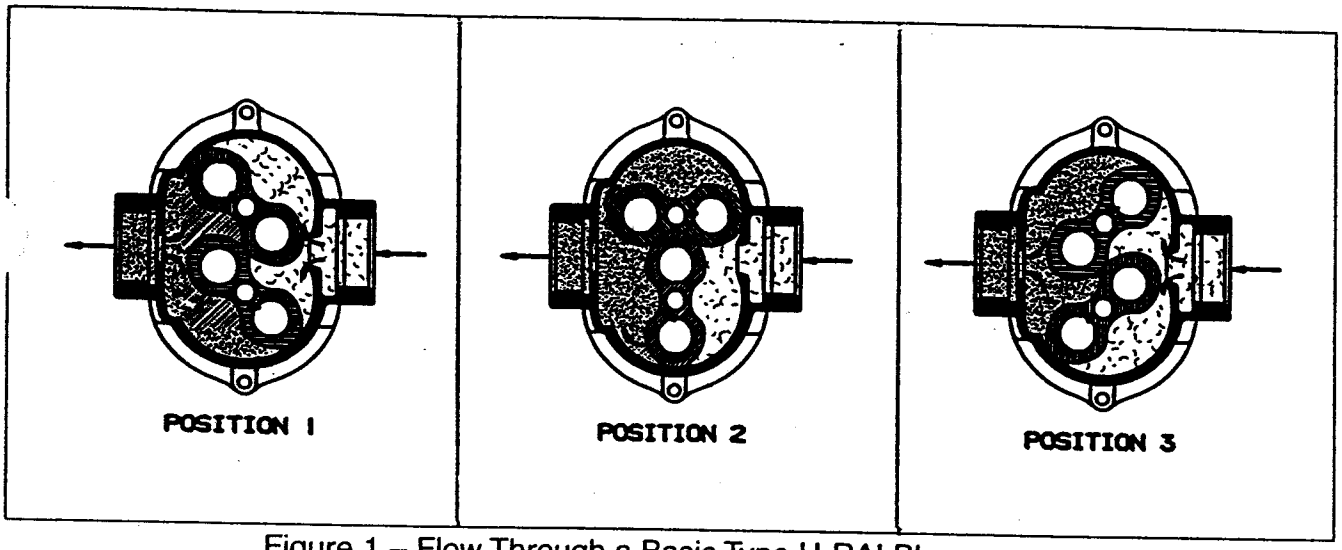

Figure 1 – Flow Through a Basic Type U-RAI Blower

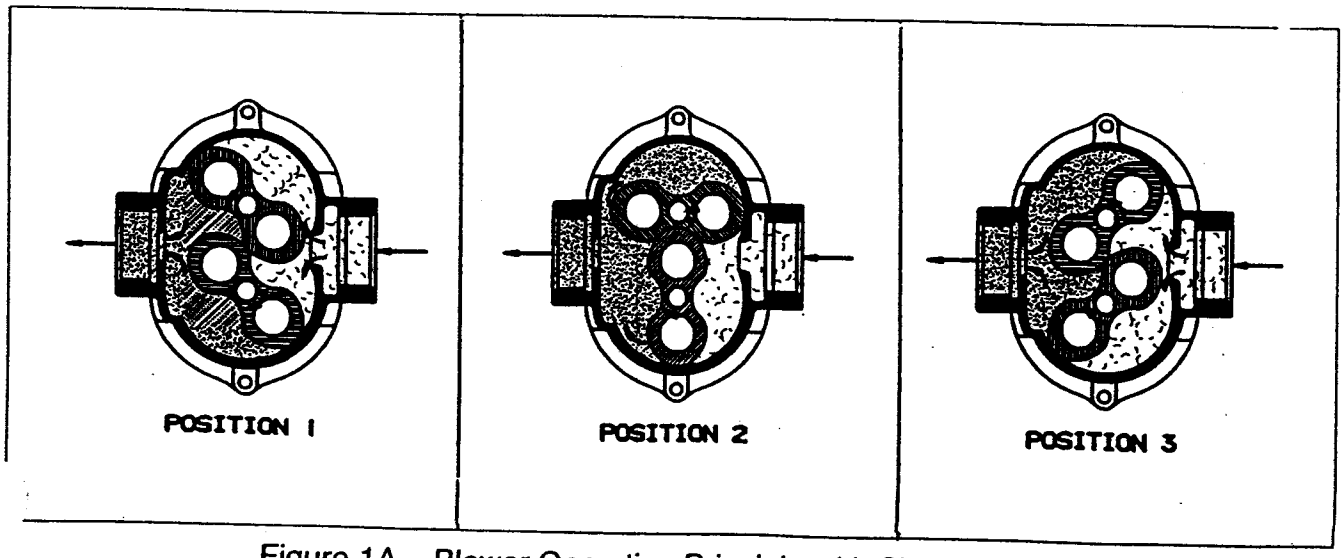

Figure 1A – Blower Operating Principle with Slot Jet U-RAI

by means of a throttle valve in the intake or discharge piping. This increases the power load on the driver, and may seriously damage the blower. Likewise, if a possibility exists that flow to the blower inlet may be cut off during normal operation of a process, then an adequate vacuum relief valve must be installed near the blower. A pressure type relief valve in the discharge line near the blower is also strongly recommended for protection against cut-off or blocking in this line.

When a belt drive is employed, blower speed can usually be adjusted to obtain desired capacity by changing the diameter of one or both sheaves. See pages 18 and 20 for minimum sheave diameter. In a direct coupled arrangement, a variable speed motor or transmission is required, or air may be vented through a manually controlled unloading valve and silencer. If discharge air is returned to the blower inlet, it must be cooled to 100°F (38°C) through a cooling by-pass arrangement.

Before making any change in blower capacity or operating conditions, contact the nearest Distributor for specific information applying to your particular blower. In all cases, operating conditions must be maintained within the approved range of pressures, temperatures and speeds as stated under LIMITATIONS. Also, the blower must not be used to handle air containing liquids or solids, or serious damage to the rotating parts will result.

OPERATING LIMITATIONS

To permit continued satisfactory performance, a Roots UNIVERSAL RAI® blower must be operated within certain approved limiting conditions. The Manufacturer's warranty is, of course, also contingent on such operation.

Maximum limits for pressure, temperature and speed are specified in Table 1 for various sizes of UNIVERSAL RAI® blowers. These limits apply to all blowers of normal construction, having operating clearances as listed in Table 5 when operated under standard atmospheric conditions. **Do not exceed any of these limits.**

Table 1 – Maximum Allowable Operating Conditions

Frame Size	Speed RPM	Inlet Vac. Inches Hg. (kPa)	Temp. Rise Fahr. Deg. (C°)	Press. Rise PSI (kPa)
22	5275	15 (50)	225 (125)	12 (82)
24	5275	15 (50)	210 (117)	7 (47)
32	3600	15 (50)	240 (133)	15 (101)
33/33J	3600	15 (50)	225 (125)	12 (82)
36/36J	3600	15 (50)	225 (125)	7 (47)
42	3600	15 (50)	240 (133)	15 (101)
45/45J	3600	15 (50)	225 (125)	10 (68)
47/47J	3600	15 (50)	225 (125)	7 (47)
53	2850	15 (50)	225 (125)	15 (101)
56/56J	2850	15 (50)	225 (125)	10 (68)
59	2850	15 (50)	225 (125)	7 (47)
65	2350	16 (53)	250 (130)	15 (101)
68	2350	16 (53)	240 (133)	12 (82)
615	2350	12 (40)	130 (72)	6 (40)
76	2050	16 (53)	250 (139)	15 (101)
711	2050	16 (53)	225 (125)	10 (68)
718	2050	12 (40)	130 (72)	6 (40)

Example: The listed maximum allowable temperature rise (increase in air temperature between inlet and discharge) for any particular blower may occur well before its maximum pressure or vacuum rating is reached. This can easily occur at high altitude or at very low speed. Temperature rise then is the limiting condition. In other words, the operating limit is always determined by the maximum rating reached first. It can be any one of the three: pressure, temperature or speed.

Be sure to arrange connections or taps for thermometers and mercury type pressure or vacuum gauges at or near the inlet and discharge connections of the blowers. These, along with a good tachometer, will enable periodic checks of operating conditions to be made easily.

PRESSURE – On pressure service, the pressure rise in pounds per square inch (kPa) (between blower inlet and discharge) must not exceed the figure listed for the specific blower frame size concerned. Also, in any system where the blower inlet is at a positive pressure above atmosphere, the discharge pressure must never exceed 25 PSI (172 kPa) gauge regardless of blower size.

On vacuum service, with the discharge going to atmospheric pressure, the inlet suction or vacuum in inches of mercury (Hg.) (kPa) must not be greater than the values listed for the specific frame size.

TEMPERATURE – Various blower frame sizes are approved only for installations where the following temperature limitations can be maintained in service.

A. Measured temperature rise in Fahrenheit degrees (C°) must not exceed listed values when the inlet is at ambient temperature. Ambient is considered as the general temperature of the space around the blower. This is not outdoor temperature unless the blower is installed outdoors.

B. If inlet temperature is higher than ambient, the listed allowable temperature rise values must be reduced by ⅔ of the difference between the actual measured inlet temperature and the ambient temperature.

C. Average of inlet plus discharge temperature must not exceed 250°F (139°C).

SPEED RANGE – UNIVERSAL RAI® blowers may be operated at speeds up to the maximums listed for various frame sizes. They may be direct coupled to suitable constant speed drivers if pressure/temperature conditions are also within limits. At low speeds, excessive temperature rise may be the limiting factor as noted in the preceding example.

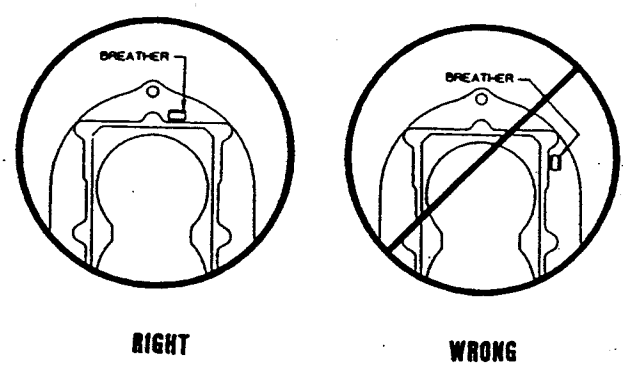

Figure 2 – Breather Installation

BLOWER ORIENTATION

The unique removable feet feature of Roots UNIVERSAL RAI® blowers permit field modification of blower mounting by repositioning blower feet and gear box breather as shown in Figure 3.

Four blower mounting positions are possible:

1. Horizontal mounting, vertical air flow, drive shaft on left.
2. Same as (1) except drive shaft on right.
3. Vertical mounting, horizontal air flow, drive shaft on bottom.
4. Same as (3) except drive shaft on top.

To change blower mounting:

1. Place blower on its feet.
2. Loosen feet capscrews (32).
3. Place blower on a solid base resting on the gear box end with drive shaft on top.
4. Remove feet. (Note – Feet capscrews (32) are longer than cylinder capscrews (26), only capscrews (32) are to be used for feet.)
5. Remove cylinder capscrews (32) where feet are to be re-installed. Install capscrews (26) in the location previously occupied by feet capscrews (32).
6. Install feet using capscrews (32).
7. Place blower on its feet on flat surface.
8. Loosen feet capscrews (32) and square up blower and re-tighten capscrews (32).
9. Gear box has four threaded holes, one with breather and three with pipe plugs. Remove pipe plug (21) from the top most hole. Remove breather (25) and install it in the top most hole. Install pipe plug that was removed from the top hole into the hole previously occupied by the breather. The breather and the pipe plug should be sealed with a thread sealer.

For convenience, the position of the grease fitting (37) and the relief fitting (38) could be interchanged, however each bearing must have one grease fitting (37) and one relief fitting (38).

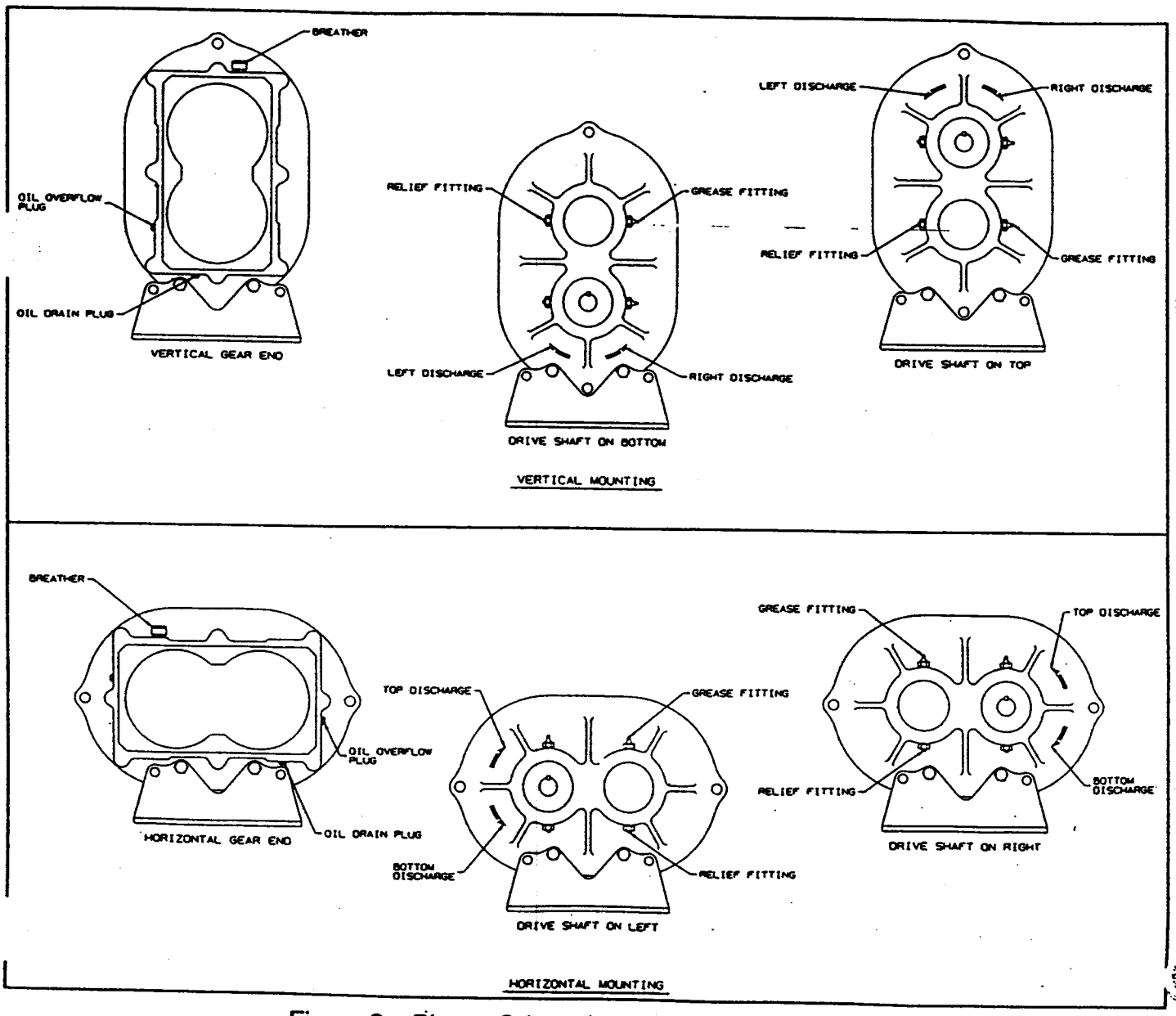

Figure 3 – Blower Orientation and Lubrication Points

INSTALLATION

Roots UNIVERSAL RAI® blowers are internally and externally treated after factory assembly to protect against normal atmospheric corrosion before installation. Maximum period of internal protection is considered to be one year under average conditions, if closing plugs or seals are not removed. Protection against chemical or salt water atmosphere is not provided. Avoid opening the blower until ready to start installation, as protection will be lost quickly by evaporation.

NOTE — If there is to be an extended period between delivery (and/or installation) and startup, the following steps should be taken to insure corrosion protection:

1. Coat internals of cylinder and gearbox with Nox-Rust No. VCI10 or equivalent. Repeat once a year or as conditions may require. Motorstor is oil soluble and does not have to be removed before lubricating. If desired, No. VCI10 may be removed from within the cylinder shortly before startup by spraying a fine mist of petroleum solvent through the blower while it is running at a slow speed with open inlet and discharge, or it can remain in the blower if it is not harmful to the operation of the connected system.
2. Fill drive end bearing cavities with grease as specified in Lubrication section.
3. Paint shaft extension, inlet and discharge flanges, and all other exposed surfaces with Nox-Rust X-110 or equivalent.
4. Seal inlet, discharge, and all vent openings with tape. It is not recommended that the unit be set in place, piped to the system, and allowed to remain idle for extended periods. If any part is left open to the atmosphere, the Motorstor vapor will escape and lose its effectiveness.
5. Units are not to be subjected to excessive vibration during storage.
6. Rotate drive shaft three or four revolutions every two weeks.
7. Prior to startup, remove flange covers on both inlet and discharge and inspect internals to insure absence of rust. Check all internal clearances. Also, at this time, remove gearbox and inspect gear teeth for rust.

Because of the completely enclosed blower design, location of the installation is generally not a critical matter. A clean, dry and protected indoor location is to be preferred. However, an outdoor or wet location will normally give satisfactory service. Important requirements are that the correct grade of lubricating oil be provided for expected temperatures, and that the blower be located so that routine checking and servicing can be handled conveniently after installation. Effect of the location on driver and accessory equipment must also be considered.

Supervision of the installation by a Factory Service Engineer is not usually required for these blowers. Workmen with experience in installing light-medium weight machinery should be able to produce satisfactory results. Handling of the equipment needs to be accomplished with care, and in compliance with safe practices. Blower mounting must be solid, without strain or twist, and air piping must be clean, accurately aligned and properly connected.

A bare blower without base should be lifted by a rope sling, with one loop passing under the gearhouse and the other loop under the cylinder.

When a blower is furnished mounted on a baseplate, with or without a driver, use of lifting slings passing under the base flanges is required. Arrange these slings so that no strains are placed on the blower casing or mounting feet, or on any mounted accessory equipment.

Before starting the installation, remove plugs, covers or seals from blower inlet and discharge connections and inspect the interior completely for dirt or foreign material. If cleaning is required, finish by washing the cylinder, headplates and impeller thoroughly with a petroleum solvent such as DuPont Triclene D. After this, turn the drive shaft by hand to make sure that the impellers turn freely at all points. Anti-rust compound on the drive shaft extension may also be removed at this time with the same solvent. Then plug the inlet and discharge connections to keep out dirt until ready to connect the air piping. Washing out is not required if the interior is found to be clean. The corrosion inhibitor used will vaporize and disappear during operation.

Care, plus consideration of all possible problems, will pay dividends when arranging the blower mounting. This is especially true when the blower is a "bare" unit furnished without a baseplate. The convenient procedure may be to mount such a unit directly on a floor or small concrete pad, but this generally produces least satisfactory results. It definitely causes the most problems in leveling and alignment.

Direct use of structural framing members is also not a recommended mounting. If unavoidable, the members must be rigidly reinforced when part of a building, and spring type mountings should not be used. Noise transmission can usually be reduced by use of a cork insulating pad 1 to 2 inches (25 to 50 mm) thickness. The pad should be supported by a full steel plate attached to the structure, with a rigid concrete slab laid on top of the cork to carry the blower and driver.

For a blower without base, it is recommended that a well anchored and carefully leveled steel or cast iron mounting plate be provided at the installation point. The plate should be ¾ to 1¼ inches (19 to 32 mm) thick, with its top surface machined flat, and needs to be large enough to provide leveling areas at one side and one end after the blower is mounted. It should have properly sized studs or tapped holes located to match the blower foot drilling. As an alternative, smaller plates at each end of the blower may be used. This is more complicated, usually makes leveling more difficult, and can produce twist or strains in the blower. Use of a high quality machinist's level is important. With the mounting plate in place and leveled, set the blower on it without bolting and check for rocking. If it is not solid, determine the total thickness of shims required under one foot to stop the rocking. Place half of this under each of the two short feet, and tighten the mounting studs or screws. Rotate the drive shaft to make sure the impellers still turn freely. If the blower is to

e direct coupled to a driving motor, consider the height the motor shaft and the necessity for it to be aligned very accurately with the blower shaft. Best arrangement for the blower to be bolted directly to the mounting while the driver is on shims of at least ⅛ inch (3 mm) ss. This allows adjustment of motor position in fi... shaft alignment by varying the shim thickness.

Satisfactory installation can be obtained by setting he baseplate on a concrete slab that is rigid and free of vibration, and leveling the top of the base carefully in two directions so that it is free of twist. The slab must be provided with suitable anchor bolts. The use of grouting nder and inside the base, after it has been carefully leveled by shimming, is recommended.

When blower and driver have been factory mounted n a common baseplate, the assembly will have been properly aligned and is to be treated as a unit for leveling purposes. It is possible for a base mounted assembly to ecome twisted during shipment thus disturbing the riginal alignment. For this reason, make the following checks after the base has been leveled and bolted down. Disconnect the drive and rotate the blower shaft by hand. t should turn freely at all points. Loosen the blower foot old-down screws and determine whether all feet are evenly in contact with the base. If not, insert shims as required and again check for free impeller rotation. Finally, if lower is direct coupled to the driver, check shaft and coupling alignment carefully and make any necessary corrections prior to grouting.

In planning the installation, and before setting the lower, consider how piping arrangements are dictated by the blower design and assembly.

When a blower is DIRECT COUPLED to its driver, the driver RPM must be selected or governed so as not to exceed the maximum speed rating of the blower. Refer to LIMITATIONS for allowable speeds for various blower sizes. A flexible type coupling should always be used to connect the driver and blower shafts.

For engine drives, couplings with proper stiffness must be selected to avoid resonant torisonal vibrations. Also, safe operating speed must be limited to avoid critical speeds.

Coupling halves must be accurately aligned, and a sufficient gap between shaft ends provided, so that side strains and end thrust on either shaft are avoided or minimized. This will require considerable care in the mounting of the driver. The two shafts must be in as near perfect alignment in all directions as possible, and the gap must be established with the motor armature on its electrical center if end play exists. Coupling halves must be fitted to the two shafts such that they can be worked into place by hand. Maximum deviation in offset alignment of the shafts should not exceed .005" (.13 mm) total indicator reading, taken on the two coupling hubs. Maximum deviation from parallel of the inside coupling faces should not exceed .001" (.03 mm) when checked at six points around the coupling.

CAUTION

Couplings as well as sheave bushings must have a slide fit with the blower shaft such that they can be ed in place by hand. Any force used to install them change blower end clearances resulting in blower damage. If an interference fit is desired for the coupling, the coupling hub should be heated and shrunk on the shaft. For engine drives, use "Locktite" between the coupling hubs and the blower/engine shafts and on the threads of the coupling set screws.

When a blower is BELT DRIVEN, a proper selection of sheave diameters can usually be made to adapt any standard driver speed to the required blower speed. This flexibility can sometimes lead to operating temperature problems caused by blower speed being too low. Make sure the drive speed selected is within the allowable range for the specific blower size, as specified under LIMITATIONS.

Belted drive arrangements usually employ two or more V-belts running in grooved sheaves, and a variety of positions are available for the driver. Installation of the driver is less critical than for direct coupling, but its shaft must be level and parallel with the blower shaft. The driver must also be mounted on an adjustable base to permit installing, adjusting and removing the V-belts. To position the driver correctly, both sheaves need to be mounted on their shafts and the nominal shaft center distance known for the belt lengths to be used.

Install the blower sheave (usually the larger one) so that its inner hub face is not more than ¼ inch (7 mm) from the bearing end cover. The shaft fit should be such that the sheave can be worked into place by hand. A tight or driving fit can damage a bearing, and may cause internal blower damage by forcing the impeller out of its normal operating position. A loose fit or wobbly sheave will cause vibration, and may result in shaft breakage.

The driver sheave should also be mounted as close to its bearing as possible, and again should fit the shaft correctly. Position the driver on its adjustable base so that ⅔ of the total movement is available in the direction away from the blower, and mount the assembly so that the face of the sheave is accurately in line with the blower sheave. This position minimizes belt wear, and allows sufficient adjustment for both installing and tightening the belts. After belts are installed, adjust their tension in accordance with the manufacturer's instructions. However, only enough tension should be applied to prevent slippage when the blower is operating under load. *Excessive tightening* can lead to early bearing failures.

Failure to properly align the blower and drive sheaves will result in the impeller being forced against one of the headplates during operation causing serious damage to the blower.

In the absence of belt manufacturer's instructions for tensioning, the following procedures may be used.

1. With the belts loose, pull the slack on all of them to the bottom side of the drive.
2. Adjust motor position to tighten belt until they appear to be seating in the sheave grooves.
3. Thump the belts with your fist. If they feel dead, tighten them more until they vibrate and feel springy when struck.
4. Run-in the drive for a short period, after preparing the blower as instructed in a following paragraph. While running, adjust until only a very slight bow appears in the slack side of the belts.
5. Stop the motor and compare the tensions of the individual belts by pressing down firmly with one hand on the top surface. It should be possible to deflect each

belt only to the point where its top surface is even with the bottoms of the other undeflected belts.

6. A new set of belts should be first tensioned about ⅓ greater than normal to allow for stretch and wear-in. Before putting the drive into normal operation, increase the tension as obtained above by a small amount. Recheck after each 8 hour operating period during the first 50 hours, and adjust as necessary.

Before operating the drive under power to check initial belt tension, first remove covers from the blower connections. Make sure the interior is still clean, then rotate the shaft by hand. Place a screen over the inlet connection to prevent anything being sucked into the blower while it is operating, and avoid standing in line with the discharge opening. Put oil in the gearhouse per instructions under LUBRICATION.

Before connecting piping, remove any remaining anti-rust compound from blower connections. Piping must be clean and should be sized so that the air velocity will not exceed 75 feet per second (23 m per second). Pipe used should be no smaller than blower connections. In addition, make sure it is free of dirt, scale, cuttings, weld beads, or foreign materials of any kind.

To further guard against damage to the blower, especially when an inlet filter is not used, install a substantial screen of 16 mesh backed with hardware cloth at or near the inlet connections. Make provisions to clean this screen of collected debris after a few hours operation. It should be removed when its usefulness has ended, as the wire will eventually deteriorate and small pieces going into the blower may cause serious damage.

Pipe threads or flanges must meet the blower connections accurately and squarely. Do not attempt to correct misalignment by springing or cramping the pipe. In most cases this will distort the blower casing and cause impeller rubbing. In severe cases it can prevent operation or result in a broken drive shaft. For similar reasons, piping should be supported near the blower to eliminate dead weight strains. Also, installation of flexible connectors or expansion joints is recommended.

Figure 4 represents in diagram form a blower installation with all accessory items that might be required under various operating conditions. Inlet piping should be completely free of valves or restrictions. When a shut-off valve (not shown) cannot be avoided, make sure a full size vacuum relief is installed near the blower inlet. This will protect against blower overload caused by accidental closing.

Need for an inlet silencer will depend on blower speed and pressure, as well as sound-level requirements in the general surroundings. An inlet filter is normally recommended, especially in dusty or sandy locations, for blower protection. A discharge silencer is also normally suggested. Specific recommendations on silencing can be obtained from the nearest Sales Office. Silencers should be mounted as close to blower as possible.

Discharge piping requires a pressure relief valve, and should include a manual unloading valve to permit starting the blower under no-load conditions. Reliable pressure/vacuum gauges and good thermometers at both inlet and discharge are recommended to allow making the important checks on blower operating conditions. If the demand is constant, but somewhat lower than the blower output, excess may be blown off through the manual unloading valve.

In multiple blower installations when two or more units discharge into a common header, use of check valves is recommended. These should be of a direct acting or free swinging type, with one valve located in each blower

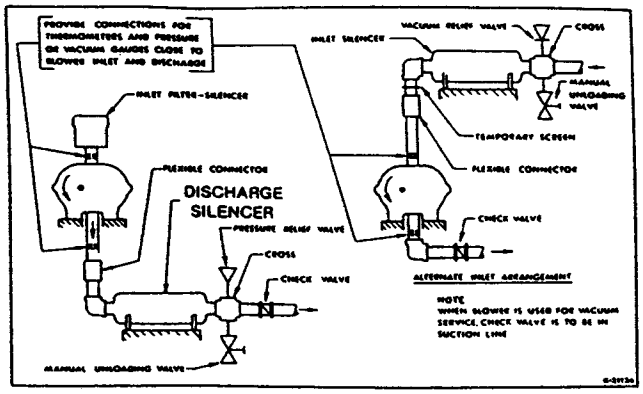

Figure 4 — Installation with Accessories

discharge line. Properly installed, they will protect against damage from reverse rotation caused by air back-flow through an idle blower.

After piping is completed, and before applying power, rotate the drive shaft by hand again. If it does not move with uniform freedom, look for uneven mounting, piping strain, excessive belt tension or coupling misalignment. Do not operate the blower more than briefly at this time because of possible inadequate oil supply in the gearhouse. Read LUBRICATION section.

LUBRICATION

A simple but very effective lubrication system is employed on UNIVERSAL RAI® blowers. At the drive shaft end the bearings are grease lubricated using hydraulic pressure relief fittings. These relief fittings vent any excess grease, preventing pressure build-up on the seals. A restriction plug and metering orifice prevent loss of lubricant from initial surges in lubricant pressure but permit venting excess lubricant under steadily rising pressures.

The blind end bearings and timing gears are enclosed by a gearhouse located opposite the drive end of the blower. In a side outlet blower, the lower timing gear functions as an oil slinger, carrying lubricant to the upper timing gear and providing splash lubrication for the bearings. Pressure within the gearbox is vented through the breather vent plug (25).

The above description also applies in general to the top or bottom outlet style blower, the principal difference being that both gears dip into the oil sump.

Before starting blower, be sure oil has been put in gearhouse, as **ALL OIL WAS DRAINED FOLLOWING SHOP TESTS.** For recommended lubrication oil see Table 2. Use a good grade industrial type rust, oxidation, and foam inhibited, non-detergent oil such as Mobil DTE BB, Texaco R&O 220, Amoco 220 or equal. Also, Roots synthetic oil has proven to be an excellent lubricant.

Table 2 — Recommended Oil Grades

Ambient Temperature ° F. (°C)	Viscosity Range SSU at 100° F. (38°C)	ISO No.
Above 90° (32°)	1000 - 1200	320
32° to 90° (0° to 32°)	700 - 1000	220
0° to 32° (−18° to 0°)	500 - 700	150
Below 0° (−18°)	300 - 500	100

To fill the gearbox, remove the breather plug and the oil overflow plug (Fig. 3). Fill the reservoir up to the overflow hole. Place the breather and the overflow plug back into their respective holes.

Table 3 — Oil Sump Capacities

Frame Size	Capacity, Fl. Oz. (Liters) Vertical	Horizontal
22	3.4 (.1)	6.1 (.18)
24	3.4 (.1)	6.1 (.18)
32	8.5 (.25)	16.0 (.47)
33	8.5 (.25)	16.0 (.47)
36	8.5 (.25)	16.0 (.47)
42	12.7 (.37)	22.8 (.67)
45	12.7 (.37)	22.8 (.67)
47	12.7 (.37)	22.8 (.67)
53	16.0 (.47)	27.6 (.82)
56	16.0 (.47)	27.6 (.82)
59	16.0 (.47)	27.6 (.82)
65	28.3 (.84)	52.1 (1.54)
68	28.3 (.84)	52.1 (1.54)
15	28.3 (.84)	52.1 (1.54)
76	32.3 (.96)	59.5 (1.76)
711	32.3 (.96)	59.5 (1.76)
718	32.3 (.96)	59.5 (1.76)

Proper lubrication is usually the most important single consideration in obtaining maximum service life and the most satisfactory operation from the unit. Unless operating conditions are quite severe, a weekly check of gearhouse oil level and necessary addition of lubricant should be sufficient. However, oil should be changed after initial 100 hours of operation. Thereafter, a complete oil change normally is made after 1000 operating hours, or less, depending on the type of oil and oil operating temperature.

Shaft bearings at the drive end of the blower are grease lubricated and each bearing housing is equipped with pressure type grease fittings and pressure type relief fittings. When servicing drive end bearings, use a NLGI #2 premium grade, petroleum base grease with high temperature (300° service temperature) and moisture resistance and good mechanical stability. Using a pressure gun, force new lubricant into each drive end bearing housing until traces of clean grease comes out of the relief fitting.

After a long shutdown, it is recommended that the grease relief fittings be removed, the old grease flushed out with kerosene or #10 lubricating oil, drained thoroughly, and bearings refilled with new grease. Be sure grease relief fittings are reinstalled. Grease should be added using hand operated grease gun to the drive end bearings at varying intervals depending on duty cycle and RPM. Table 4 has been prepared as a general greasing schedule guide based on average operating conditions. More frequent intervals may be necessary depending on the grease operating temperature and under unusual circumstances.

Table 4 — Suggested Bearing Lubrication Intervals

Speed in RPM	Operating Hours Per Day 8	16	24
	Greasing Intervals in Weeks		
750 - 1000	7	4	2
1000 - 1500	5	2	1
1500 - 2000	4	2	1
2000 - 2500	3	1	1
2500 - 3000	2	1	1
3000 and up	1	1	1

OPERATION

Before operating a blower under power for the first time, check the unit and the installation thoroughly to reduce the likelihood of avoidable troubles. Use the following procedure list as a guide, but consider any other special conditions in the installation.

1. Be certain that no bolts, tools, rags or dirt have been left in the blower air chamber.
2. Be certain that inlet piping is free of debris. If an outdoor intake without filter is used, be sure the opening is located so it cannot pick up dirt and is protected by a strong screen or grille. Use of the temporary protective screen at the blower as described under INSTALLATION is strongly recommended.
3. Recheck blower leveling, drive alignment and tightness of all mounting bolts if installation is not recent. If belt drive is used, adjust belt tension correctly.
4. Turn drive shaft by hand to make sure impellers still rotate without bumping or rubbing at any point.
5. Make sure oil level in blower gearbox is correct.
6. Check lubrication of driver. If it is an electric motor, be sure that power is available and that electrical overload devices are installed and workable.
7. Open the manual unloading valve in the discharge air line. If a valve is in the inlet piping, be sure it is open.
8. Bump blower a few revolutions with driver to check that direction of rotation is correct, and that both units coast freely to a stop.

After the preceding points are cleared, blower is ready for trial operation under "no-load" conditions as set up under Item 7. The following procedure is suggested to cover this initial operating test period.

a. Start blower, let it accelerate to full speed, then shut off. Listen for knocking sounds, both with power on and as speed slows down.
b. Repeat above, but let blower run 2 or 3 minutes. Check for noises, and vibrations of 5 mils or greater.
c. Operate blower for about 10 minutes unloaded. Check oil levels. Feel cylinder and headplate surfaces for development of spots too hot to touch, indicating impeller rubs. Be aware of any noticeable increase in vibration.

Assuming that all trials have been satisfactory, or that necessary corrections have been made, the blower should now have a final check run of at least one hour under normal operating conditions. After blower is re-

started, gradually close the discharge unloading valve to apply working pressure. At this point it is recommended that a good pressure gauge or manometer be connected into the discharge line if not already provided, and that thermometers be in both inlet and discharge lines. Readings from these instruments will show whether pressure or temperature ratings of the blower are being exceeded.

During the final run, check operating conditions frequently and observe the oil levels at reasonable intervals. If excessive noise or local heating develops, shut down immediately and determine the cause. If either pressure rise or temperature rise across the blower exceeds the limit specified in this manual shut down and investigate conditions in the piping system or in the process to which air is being supplied. Refer to the **TROUBLE SHOOTING CHECKLIST** for suggestions on various problems that may appear.

The blower should now be ready for continuous duty operation at full speed. During the first few days make periodic checks to determine whether all conditions remain steady, or at least acceptable. This may be particularly important if the blower is supplying air to a process system where conditions can vary. At the first opportunity, stop the blower and clean the temporary inlet protective screen. If no appreciable amount of debris has collected, the screen may be removed. See comments under **INSTALLATION.** At this same time, verify leveling, coupling alignment or belt tension, and mounting bolt tightness.

Should operating experience prove that blower capacity is a little too high for the actual air requirements, a small excess may be blown off continuously through the manual unloading vent valve. **Never rely on the pressure relief valve as an automatic vent.** Such use may cause the discharge pressure to become excessive and can also

TROUBLE SHOOTING CHECKLIST

TROUBLE	ITEM	POSSIBLE CAUSE	REMEDY
No Air Flow	1	Speed too low	Check by tachometer and compare with speed shown on Roots Order Acknowledgment.
	2	Wrong rotation	Compare actual rotation with Figure 3. Change driver if wrong.
	3	Obstruction in piping	Check piping, screen, valves, silencer, to assure an open flow path.
Low capacity	4	Speed too low	See item 1. If belt drive, check for slippage and readjust tension.
	5	Excessive pressure	Check inlet vacuum and discharge pressure, and compare these figures with specified operating conditions on Order.
	6	Obstruction in piping	See item 3.
	7	Excessive slip	Check inside of casing for worn or eroded surfaces causing excessive clearances.
Excessive Power	8	Speed too high	Check speed and compare with Roots Order Acknowledgement.
	9	Pressure too high	See item 5.
	10	Impellers rubbing	Inspect outside of cylinder and headplates for high temperatures areas, then check for impeller contacts at these points. Correct blower mounting, drive alignment.
Overheating of Bearings, or Gears	11	Inadequate lubrication	Restore correct oil levels in gearbox and lubricate.
	12	Excessive lubrication	Check gear oil level. If incorrect, drain and refill with clean oil of recommended grade.
	13	Excessive pressure rise	See item 5.
	14	Coupling misalignment	Check carefully. Realign if questionable.
	15	Excessive belt tension	Readjust for correct tension.
	16	Speed too low	Speeds lower than the minimum recommended will overheat the entire blower.
Vibration	17	Misalignment	See item 14.
	18	Impellers rubbing	See item 10.
	19	Worn bearings/gears	Check gear backlash and condition of bearings.
	20	Unbalanced or rubbing impellers	Scale or process material may build up on casing and impellers, or inside impellers. Remove build-up to restore original clearances and impeller balance.
	21	Driver or blower loose	Tighten mounting bolts securely.
	22	Piping resonances	Determine whether standing wave pressure pulsations are present in the piping. Refer to Sales Office.

result in failure of the valve itself. If blower capacity appears to be too low, refer to the **TROUBLE SHOOTING CHECKLIST** first. If no help is found there it may be possible to increase the blower speed. Before attempting this change, contact the nearest Distributor for recommendations. Be prepared to furnish data on actual air requirements and operating pressure/temperature conditions.

VIBRATION ASSESSMENT CRITERIA

With measurements taken at the bearing locations on the housings, an unfiltered vibration of 1.0 in/sec peak is considered an appropriate assessment guide line for rotary lobe blowers rigidly mounted on stiff foundations.

If the blower is operating above this level then the installation must be fully evaluated to determine the source or cause of the vibration. And, the cause corrected.

In general, blower vibration levels should be monitored on a regular basis and the vibration trend observed for progressive or sudden change in level. If such a change occurs, the cause should be determined through spectral analysis.

SAFETY PRECAUTIONS

For equipment covered specifically or indirectly in this instruction book, it is important that all personnel observe safety precautions to minimize the chances of injury. Among many considerations, the following should particularly be noted:

- **Blower casing and associated piping or accessories may become hot enough to cause major skin burns on contact.**
- **Internal and external rotating parts of the blower and driving equipment can produce serious physical injuries. Do not reach into any opening in the blower while it is operating, or while subject to accidental starting. Cover external moving parts with adequate guards.**
- **Disconnect power before doing any work, and avoid by-passing or rendering inoperative any safety or protective devices.**
- **If blower is operated with piping disconnected, place a strong coarse screen over the inlet and avoid standing in the discharge air stream.**
- **Stay clear of open inlet piping (suction area) of pressure blowers, and the open discharge blast from vacuum blowers.**
- **Stay clear of the blast from pressure relief valves and the suction area of vacuum relief valves.**
- **Avoid extended exposure in close proximity to machinery which exceeds safe noise levels.**
- **Use proper care and good procedures in handling, lifting, installing, operating and maintaining the equipment.**
- **Casing pressure must not exceed 25 PSI (172 kPa) gauge. Do not pressurize vented cavities from an external source, nor restrict the vents.**
- **Do not use air blowers on explosive or hazardous gases.**
- **Other potential hazards to safety may also be associated with operation of this equipment. All personnel working in or passing through the area should be warned by signs and trained to exercise adequate general safety precautions.**

MAINTENANCE & REPLACEMENTS

A good program of inspection and maintenance servicing, followed consistently, is the most reliable method of minimizing repairs to a blower. A simple record of services and dates will help keep this work on a regular schedule. Basic service needs are lubrication, checking for hot spots or increase in vibration and noise and the recording of operating pressures and temperatures. Above all, a **blower must be operated within its specified rating limits,** to obtain satisfactory service life.

A newly installed blower should be checked frequently during the first month of full-time operation. Attention thereafter may be less frequent, depending on what the early checks have shown. Lubrication is normally the most important consideration. Unless operating conditions are unusually severe, a weekly check of oil levels in the gearbox, with addition of oil as required, should be sufficient. Complete oil changes should be made at intervals of 1000 operating hours, or more frequently if oil condition becomes poor.

Driver lubrication practices should be in accordance with the manufacturer's instructions. If direct connected to the blower through a lubricated type coupling, the coupling should be checked and greased each time blower oil is changed. This will help reduce wear and prevent it from causing vibration. In a belted drive system, check belt tension periodically and inspect for frayed or cracked belts. Refer to tensioning instructions under **INSTALLATION.**

In a new and properly installed blower there are no moving contacts between the two impellers, or between the impeller and cylinder or headplates. Wear is then confined to the bearing which support and locate the shafts, the shaft seals, and the timing gears. All are lubricated, and wear should be nominal if clean oil of the correct grade is always supplied. Seals are subject to deterioration as well as wear, and may require replacement at varying periods.

Shaft bearings have been selected to have optimum life under average conditions with proper lubrication. They are critical in the service life of the blower. Gradual bearing wear may allow a shaft position to change slightly, until rubbing develops between impeller and cylinder headplate. This will cause spot heating, which can be detected by feeling these surfaces. Sudden bearing failure is usually more serious. Since the shaft and impeller are no longer supported and properly located, extensive general damage to the blower casing and gears is likely to occur.

Shaft seals should be considered expendible items, to be replaced whenever drainage from the headplate vent cavity becomes excessive or when the blower is disassembled for any reason. Sealing effectiveness can vary considerably from seal to seal and is also affected by shaft smoothness under the seal lip. Because of these normal variables, minor seal leakage should not be considered an indicator for seal replacement.

Timing gear wear, when correct lubrication is maintained should be negligible over a period of years. Gear teeth are cut to provide the correct amount of backlash, and gears correctly mounted on the shafts will accom-

modate a normal amount of tooth wear without permitting contact between lobes of the two impellers.

However, a high oil level will cause churning and excessive heating, indicated by an unusually high temperature at the bottom of the gear housing. Consequent heating of the gears will result in loss of tooth-clearance or backlash, and rapid wear of the gear teeth usually will develop. Continuation of this tooth wear will eventually produce impeller contacts (knocking), and from this point serious damage will be unavoidable if blower operation is continued. A similar situation can be produced suddenly by gear tooth fracture, which is usually brought on by sustained overloading or momentary shock loads.

Operating problems may also develop from causes other than internal parts failure. Operating clearances within a blower are only a few thousandths of an inch (hundredths of a mm). This makes it possible for impeller interferences or casing rubs to result from shifts in the blower mounting or from changes in piping support. Foreign materials sucked into the blower will also cause trouble, which can only be cured by disconnecting the piping and thoroughly cleaning the blower interior.

If this type of trouble is experienced, and the blower is found to be clean, try removing mounting strains. Loosen blower mounting bolts and reset the leveling and drive alignment. Then tighten mounting again, and make sure that all piping meets blower connections accurately and squarely before reconnecting it.

A wide range of causes for operating troubles are covered in the **TROUBLE SHOOTING CHECKLIST.** The remedies suggested threr in some cases need to be performed by qualified mechanics with a good background of general experience, using procedures detailed in this manual. Major repairs generally are to be considered beyond the scope of maintenance, and should be referred to the nearest Sales Office listed on the last page.

Warranty failures should not be repaired at all, unless specific approval has been ovtained through a Sales Office or the factory before starting work. Unauthorized disassembly within the warranty period may void the warranty.

When a blower is taken out of service it may require internal protection against rusting or corrosion. The need for such protection must be a matter of judgment based on existing conditions as well as length of downtime. Under favorable conditions, protection will probably not be needed if shut-down is not longer than a month. Under atmospheric conditions producing rapid corrosion, the blower should be protected immediately. If blower is to be shut down for an extended period of time, see suggestions for corrosion protection under installation.

It is recommended that major repairs, if needed, be performed at a Dresser authorized service facility. However, it is recognized that this may not always be practical, especially when a spare blower is not available. If a blower is out of the warranty period, mechanical adjustments and parts replacement may be undertaken locally at the owner's option and risk. It is recommended that Factory Parts be used to insure fit and suitability. The maintenance of a small stock of on-hand spare parts can eliminate possible delays. When ordering parts give Item Numbers and their word descriptions from Figures 5 & 6. Also specify quantities wanted and the blower size and serial number from the nameplate.

Repairs or adjustments are best performed by personnel with good mechanical experience and the ability to follow the instructions in this manual. Some operations involve extra care and patience, and a degree of precision work. This is especially true in timing impellers and in handling bearings. Experience indicates that a high percentage of bearing failure is caused by dirt contamination before or during assembly. Therefore, the work area should be cleaned before starting disassembly, and new or re-usable parts protected during progress of the work.

In the following outlines of repair procedures, numbers shown in brackets ( ) correspond to the Item Numbers used in assembly drawing, Figures 11 & 13. It is recommended that the procedure be studied carefully and completely, with frequent reference to the drawings, before starting work. This will produce better efficiency through an understanding of what work is to be done, and the order of doing it. Before disassembly, mark all parts so that they may be returned to original locations or relative positions.

A — Replacing Timing Gears

1. Drain all oil from the gearhouse by removing drain plug (21) in the bottom. Remove gearhouse by taking out all cap screws (23) in its flange. It may be necessary to bump the sides with a wood block or mallet to break the flange joint.
2. Reach through one of the blower pipe connections and place a chalk mark on the strip of one impeller and the mating waist of the other, so that they may easily be returned to their original relative positions.

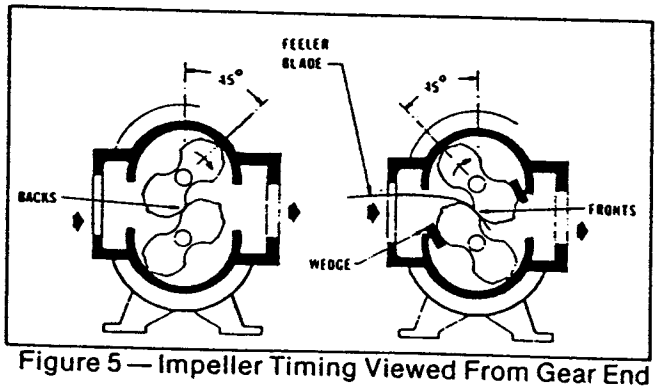

Figure 5 — Impeller Timing Viewed From Gear End

3. GEAR REMOVAL: For this operation, the impellers should be wedged as shown in Figure 5. Back off gear clamping nuts (17) about ¼". Use a puller of the type shown in Figure 10. Position it around the gear per Figure 9. As the puller set screw is torqued, the puller will have a tendency to turn and contact teeth of the other gear. To prevent this contact, hold the puller corner nut with a wrench while torquing the set screw. Once the gear is unseated, remove the puller. Remove gear nuts (17) and the gear. Repeat same procedure for the other gear. NOTE: Do not remove gear nuts (17) completely before the gears are unseated from the taper fits or damage/injury may result.

4. GEAR INSTALLATION: Place impellers in correct position as previously marked. Be sure shafts and gear bores are clean and free of scratches. Clean the shaft tapered fits. Place hardwood wedges as shown in Figure 5. Install drive gear (4) and gear nut (17) so match mark at tooth is at the line of engagement. Tighten the drive gear nut to the torque given in Table 5. Blower assembly must be fastened down for torquing operation.

TABLE 5 — GEAR NUT TORQUE

Gear Size (in.)	Torque	
	lb.-ft.	(kg-m)
2.5	60	(8.3)
3.5	110	(15.2)
4.0	190	(26.3)
5.0	250	(34.6)
6.0	400	(55.3)
7.0	550	(76.1)

5. Installing driven gear (4) - Insert a long, metal feeler gauge between the impellers' lobes at the fronts or backs as shown in Figure 5. Feeler gauge thickness to be a middle value from Table 6 for fronts and backs. Align the gear so the tooth match marks agree with the drive gear, then install nut (17). Tighten lightly with a small wrench, then check front and back clearances against Table 6 for each 15° position. Both fronts and backs should be about the same and within the specified range in Table 6. Adjust gear position, if necessary, then insert the corrected feeler gauge and wedges and use a torque wrench to tighten the gear nut to the torque specified in Table 5. Remove wedges and rotate the drive shaft by hand to make sure there are no gear tight spots or impeller contacts.

   Caution! Keep fingers away from impellers and gears.

6. Check the end clearances between impellers and headplates. Adjust clearances per B-15 below.

7. When clearances are correct, clean and re-install the gearhouse. Check condition of flange gasket (7) and replace if questionable. Fill gearhouse to correct level with proper grade of oil.

B — Replacing Shaft Bearings, and Impellers

Remove coupling or sheave from the drive shaft. Drain and remove gearhouse, and pull the timing gears. If gears are to be re-used, mark them so they may be returned to the same shafts.

Break corners and deburr the keyway. Remove bearing end cover at the drive end. Remove bearing clamp plates (34).

2. Make single and double identifying punch marks on the mating edges of headplate and cylinder flanges at the two ends of the blower.

3. At the drive end, drive out the two dowel pins and remove all capscrews holding headplate to cylinder. By inserting jacking screws into the two threaded flange holes, and turning them in evenly, the headplate will be separated from the cylinder. As the headplate comes off the shafts it will bring bearings with it. 2½" and 3½" gear diameter units do not have tapped holes for jack screws in the drive end headplates. Remove dowel pins and all capscrews holding headplate to cylinder and foot on the drive end. Support unit under gear end cylinder flange with the shafts vertical. Using soft metal block against gear end shafts, push them out of gear end headplate.

4. For 2½" and 3½" gear diameter units, support the drive end headplate on the underside, and using soft metal block against drive end, shafts, push them out of drive end headplate.

   For 4", 6" & 7" gear diameter units, from the gear end, using a wood or soft metal block against the ends of the shafts, drive them out of the headplate. If they are to be reused, protect them from damage in this operation.

5. If blower interior surfaces need cleaning, it may be advisable to separate the gear end headplate from the cylinder. Use the same general procedure as employed at the drive end.

6. Working from the back (flat) face of each headplate, push or tap out the bearings and seals. Use a round bar or tube that will pass through the shaft clearance holes in the headplates. All lip seals will be damaged during removal and must be replaced.

7. Clean bearing and seal pockets in headplates and remove burrs or rough edges. (Apply a thin coating of sealant on seal O.D.) Press new seals (27) into gear end headplate using a round tube or bar with recessed end that will bear on the outer metal edge of seal enclosure. Seal lip should point toward the driving tool. Seals to be flush with outboard bore face. Apply a light coat of oil or grease to the seal lips. In a similar fashion, install lip seals into the drive end headplate.

8. Place cylinder on a flat surface. Assemble gear end headplate to cylinder after checking flange punch marks. Drive in the two locating dowel pins before tightening flange screws. Also install gear end foot using the same longer cap screws (32) and washers (41). (on 6" & 7" UNIVERSAL RAI® install both gear and feet.).

9. Place the assembly horizontally on steel blocks with gear end headplate on bottom. The height of the blocks should be sufficient to clear gear end shaft extensions. Assemble impellers into the cylinder with the drive shaft (longer shaft) in same

location as in original assembly. Before starting the shafts through the headplate holes, make sure shaft ends have no sharp or rough edges to damage seal lips. Position impellers at 90° to each other in the cylinder, using lobe-and-waist match marks if original impellers are being re-installed. Install drive end headplate and feet in same manner as gear end.

10. It is recommended that new bearings be used for rebuild. Apply thin film of machine oil on the shaft bearing fit, bearing I.D., and headplate bearing bore. Install drive end bearings into headplate. Use a tube with flanged end that will contact both bearing faces simultaneously. Refer to Fig. 11 for proper bearing depths.

    NOTE: Cylindrical drive bearing should be installed with inner race large shoulder facing outboard.

11. Place blower on its feet on a flat surface. Loosen feet capscrews (32) and square up unit. Re-tighten capscrews (32). Clamp unit down to a solid base for further assembly.

12. Oil the gear end bearing fits as described previously. Install 2½-5" UNIVERSAL RAI® gear end bearings flush with the headplate bearing shoulders using proper drivers. On 6" & 7" UNIVERSAL RAI®, install thrust washer (29) in bearing bores then install gear end bearings so that they protrude 1/16" (1.6mm) above headplate surface.

13. Install bearing clamp plates (34). On 6" & 7" UNIVERSAL RAI®, impeller end clearances are also to be set during this step. Install clamp plates (34) with capscrews (31) making sure that the gap between the clamp plates and the headplate is even all around, at the same time, set end clearances per Table 5.

14. Install gears and time impellers as in (A).

15. For setting end clearances on 2½-5" gear diameter units, special tools, thrust adjuster fork Fig. 7 and thrust adjuster saddle Figure 8 are required. Refer to Fig. 6 for installation of tools. The flat side of the saddle rests against the bearing inner race and the flat side of the fork rests against the back side of the gear. Install a shim, with thickness equal to gear end clearance (Table 6), between the impeller and the gear end headplates. Tap on top of the fork until the shim becomes snug. Remove the shim and check end clearances. To increase gear end clearance, tap on the end of the gear end shaft with a soft metal mallet. On units, UNIVERSAL RAI®, set end clearances for 6" & 7" by turning capscrews (31) evenly in or out.

16. Install drive end cover (5) after packing bearing cavities with suitable grease. Replace drive shaft seal. Lip must point toward (33) the bearing. Exercise care not to damage the lip as it passes over shaft keyway.

17. Install gasket item (7). Install the gear house after cleaning out the inside. Tighten gear box cap screws (23) evenly. Fill with correct grade of oil until oil flows out through oil level hole. Grease drive and bearings. (See Lubrication.)

18. Reinstall coupling or belt sheave making sure that they have a slight slide fit with the shaft and could be installed by hand.

Where repairs involve parts replacement, it is recommended that Factory Parts be used to insure fit and suitability. Delay in making such repairs can be reduced by having spare parts on hand.

When ordering parts, please furnish all information from the blower nameplate.

Repairs or adjustments to blowers should be performed by personnel with a good back ground of general mechanical experience and the ability to follow the detailed instructions in this manual. No special tools are required. Some operations involve extra care and a degree of precision work. This is especially true in timing impellers, and in handling bearings. Experience indicates that a high percentage of bearing failures is caused by dirt contamination before or during assembly. Therefore, clean the work area before starting disassembly, and protect new or reuseable parts during progress of the work. (See page 23 for Repair Kit Information.)

INTERNAL CLEARANCES

References to operating clearances in this manual include only one mention of the specific amount of clearance to be used or expected. For units in good condition this information is not essential in field service work. Situations may arise, however, when it is desirable to compare existing clearances with the correct Engineering values or to re-establish clearances.

Listed in Table 6 are the ranges of impeller clearances used in factory assembly of normal UNIVERSAL RAI® blowers. It should be kept in mind that clearances may change slightly in service, but should never be less than the minimum values listed. Only well qualified personnel should attempt to measure clearances for direct comparison with this data.

Table 6 – Normal Clearances for UNIVERSAL U-RAI® and U-RAI-J® Blowers – Inches (MM)

SIZE	IMPELLER ENDS			CYLINDER		IMPELLER
	TOTAL	DRIVE END MINIMUM	GEAR END MINIMUM	INLET & DISCHARGE	CENTER	FRONTS BACKS
.2	.006/.010 (.15-.25)	.003 (.08)	.003 (.08)	.004/.005 (.10-.13)	.002/.003 (.05-.08)	.007/.01 (.18-.25)
24	.006/.010 (.15-.25)	.003 (.08)	.003 (.08)	.004/.005 (.10-.13)	.002/.003 (.05-.08)	.007/.01 (.18-.25)
32	.006/.011 (.15-.28)	.003 (.08)	.003 (.08)	.004/.006 (.10-.15)	.002/.003 (.05-.08)	.01/.012 (.25-.30)
33/33J	.006/.011 (.15-.28)	.003 (.08)	.003 (.08)	.004/.006 (.10-.15)	.002/.003 (.05-.08)	.01/.012 (.25-.30)
36/36J	.006/.011 (.15-.28)	.003 (.08)	.003 (.08)	.004/.006 (.10-.15)	.002/.003 (.05-.08)	.01/.012 (.25-.30)
42	.008/.011 (.20-.28)	.004 (.10)	.004 (.10)	.005/.007 (.13-.18)	.003/.004 (.08-.10)	.009/.012 (.23-.30)
45/45J	.008/.013 (.20-.33)	.004 (.10)	.004 (.10)	.005/.007 (.13-.18)	.003/.004 (.08-.10)	.012/.015 (.30-.38)
47/47J	.008/.013 (.20-.33)	.004 (.10)	.004 (.10)	.005/.007 (.13-.18)	.003/.004 (.08-.10)	.012/.015 (.30-.38)
53	.008/.011 (.20-.28)	.004 (.10)	.004 (.10)	.005/.008 (.13-.20)	.003/.004 (.08-.10)	.011/.013 (.28-.33)
56/56J	.008/.013 (.20-.33)	.004 (.10)	.004 (.10)	.005/.008 (.13-.20)	.003/.004 (.08-.10)	.015/.017 (.38-.43)
59	.008/.013 (.20-.33)	.004 (.10)	.004 (.10)	.005/.008 (.13-.20)	.003/.004 (.08-.10)	.015/.017 (.38-.43)
65	.012/.016 (.30-.40)	.008 (.20)	.004 (.10)	.006/.008 (.15-.20)	.006/.008 (.15-.20)	.010/.014 (.25-.36)
68	.014/.018 (.36-.46)	.010 (.25)	.004 (.10)	.006/.008 (.15-.20)	.006/.008 (.15-.20)	.010/.014 (.25-.36)
615	.014/.018 (.36-.46)	.010 (.25)	.004 (.10)	.006/.008 (.15-.20)	.006/.008 (.15-.20)	.010/.014 (.25-.36)
76	.012/.016 (.30-.40)	.008 (.13)	.004 (.10)	.006/.008 (.15-.20)	.006/.008 (.15-.20)	.013/.015 (.33-.38)
711	.014/.018 (.36-.46)	.010 (.25)	.004 (.10)	.006/.008 (.15-.20)	.006/.008 (.15-.20)	.013/.015 (.33-.38)
718	.014/.018 (.36-.46)	.010 (.25)	.004 (.10)	.006/.008 (.15-.20)	.006/.008 (.15-.20)	.013/.015 (.33-.38)

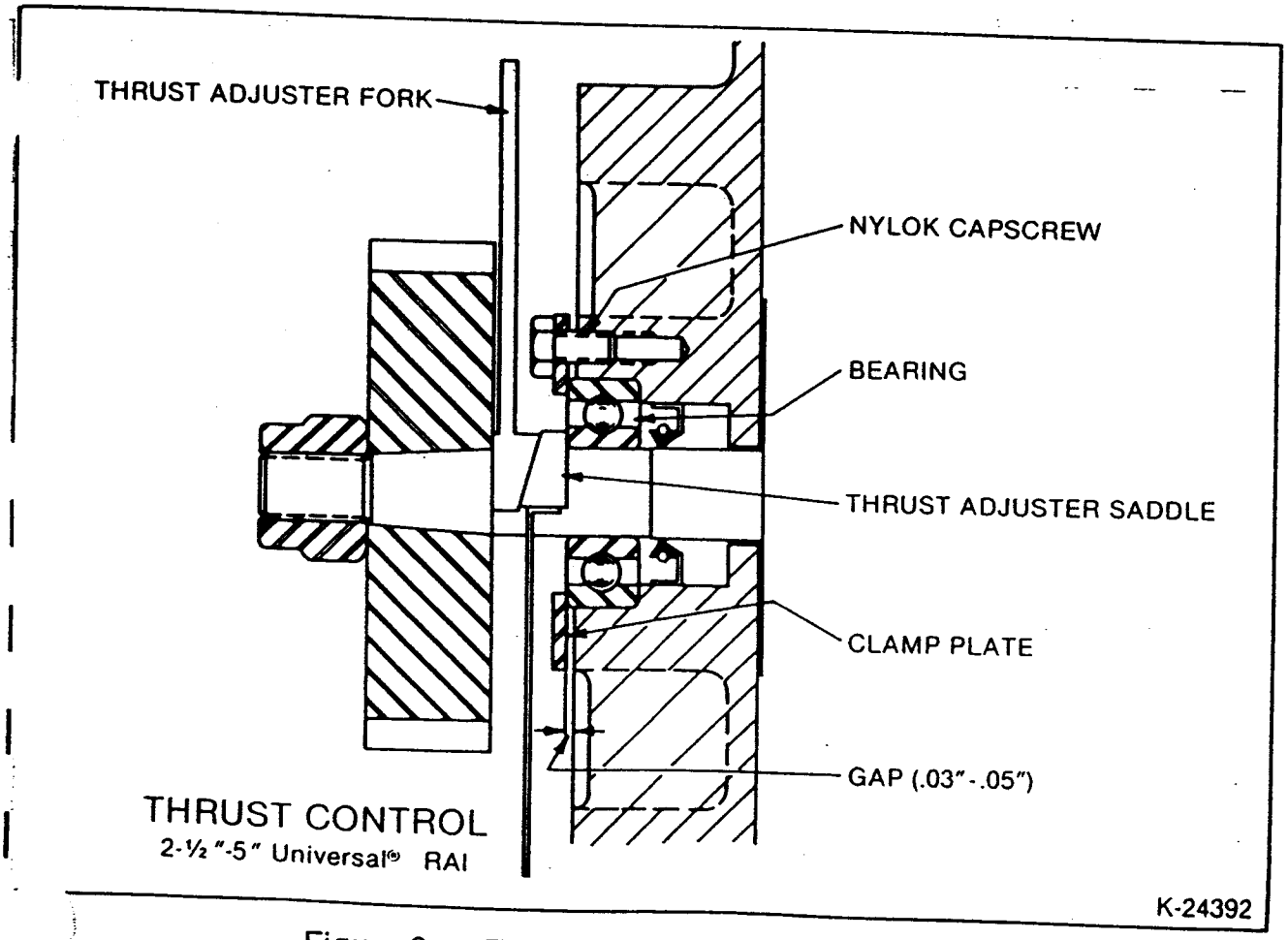

Figure 6 — Thrust Setting, 2½"-5" UNIVERSAL RAI®

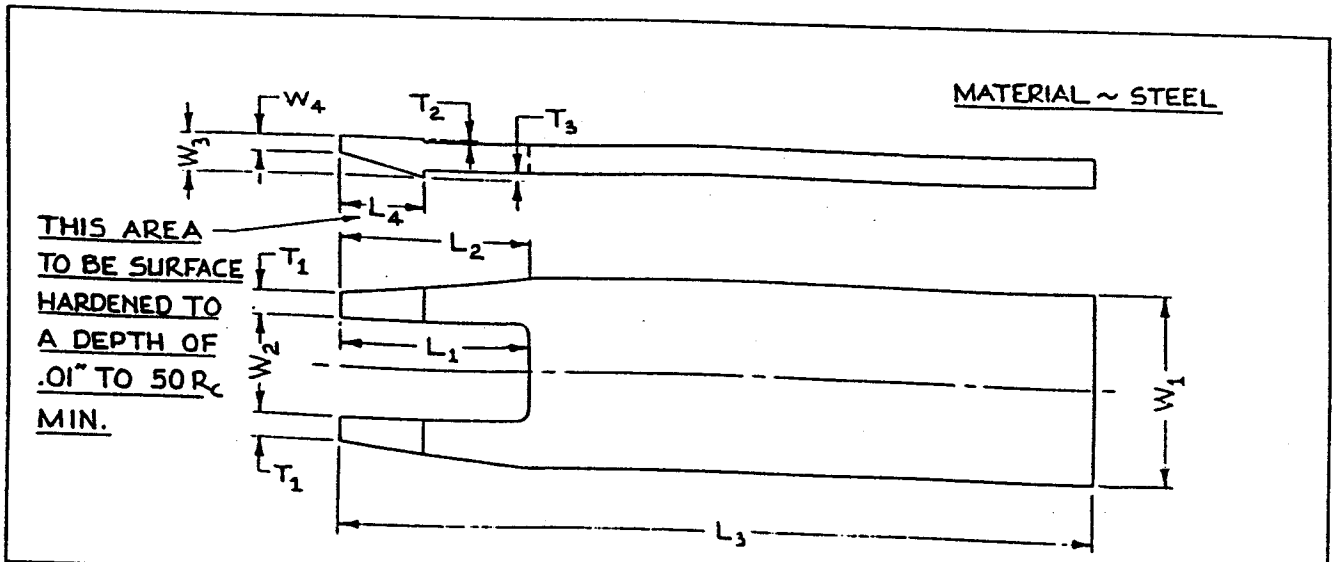

PART Nº	BLW. SIZE	L_1	L_2	L_3	L_4	W_1	W_2	W_3	W_4	T_1	T_2	T_3	NOTES
812-973-001	2 1/2"	1 3/4	1 3/4	6 1/2	9/16	1 3/8	11/16	1/4	1/8	7/32	1/32	1/32	
812-973-002	3 1/2"	2	2	7	7/8	1 1/2	13/16	5/16	1/16	7/32	1/32	1/16	
812-973-003	4"	2	2	7 1/2	1	1 3/4	1 1/32	3/8	1/16	1/4	1/32	1/32	
812-973-004	5"	2 1/4	2 1/4	8	7/8	2	1 1/4	13/32	3/16	1/4	1/32	1/16	

Figure 7 — Thrust Adjuster Fork

812-973

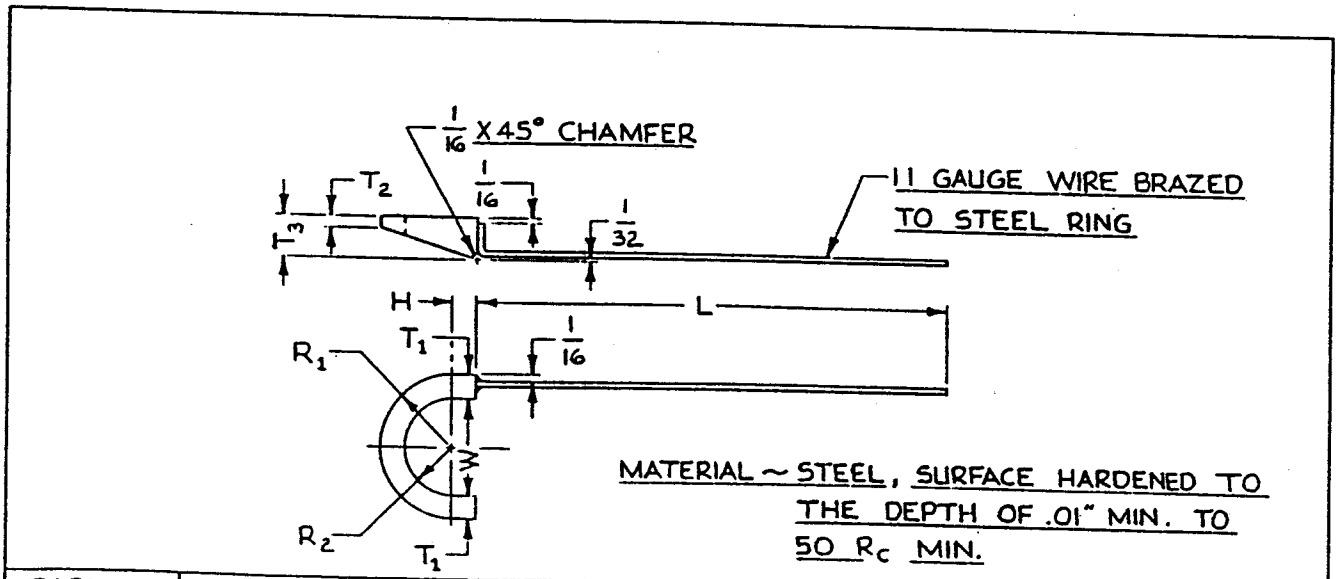

PART Nº	BLW. SIZE	R_1	R_2	W	T_1	T_2	T_3	H	L	NOTES
812-974-001	2 1/2"	15/32	11/32	11/16	1/8	1/16	1/4	3/16	3	
812-974-002	3 1/2"	5/8	13/32	13/16	7/32	1/16	5/16	3/16	3 1/2	
812-974-003	4"	49/64	33/64	1 1/32	1/4	1/8	7/16	1/4	4	
812-974-004	5"	7/8	5/8	1 1/4	1/4	1/8	7/16	1/4	5	

Figure 8 — Thrust Adjuster Saddle

812-974

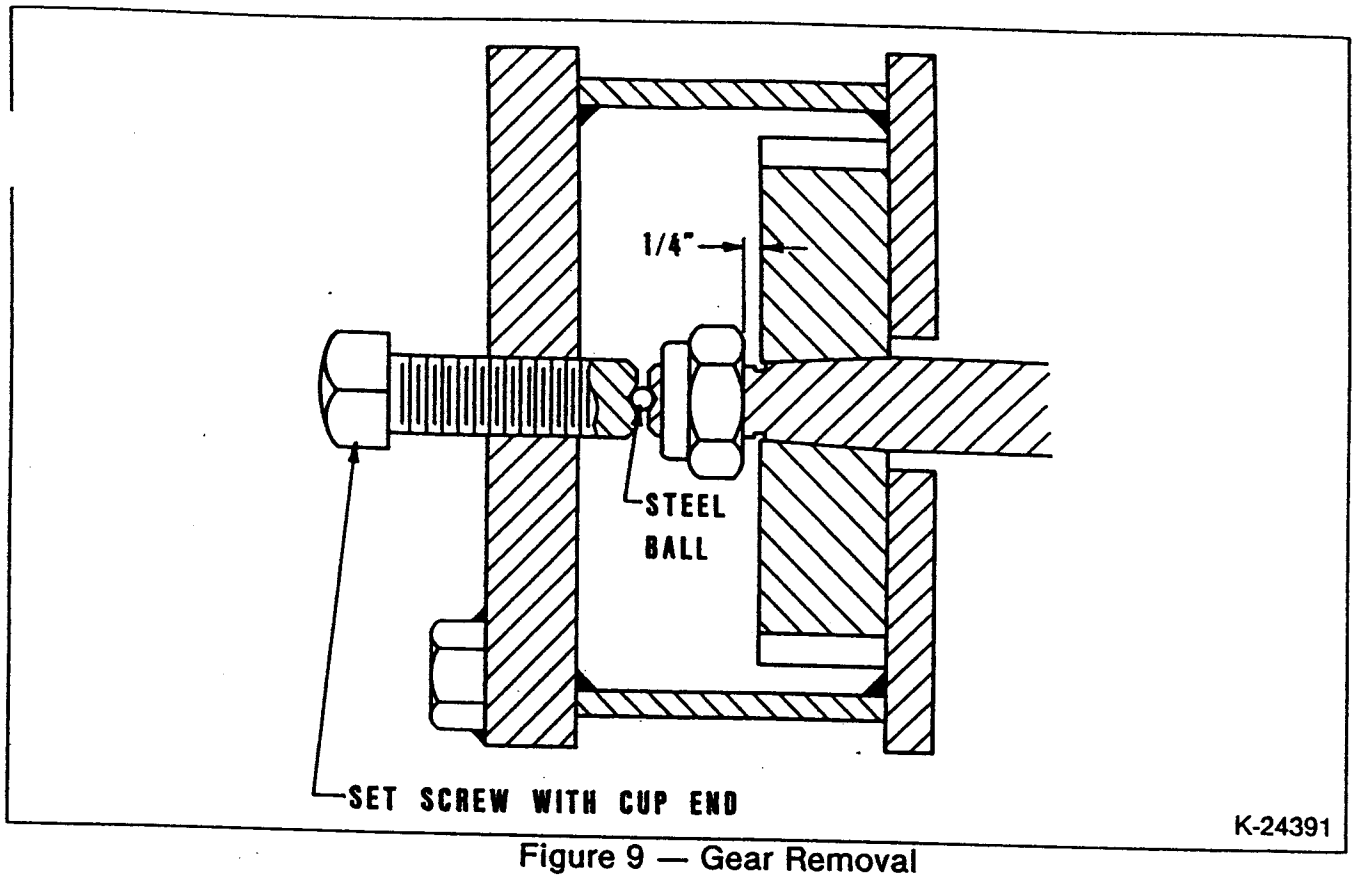

Figure 9 — Gear Removal

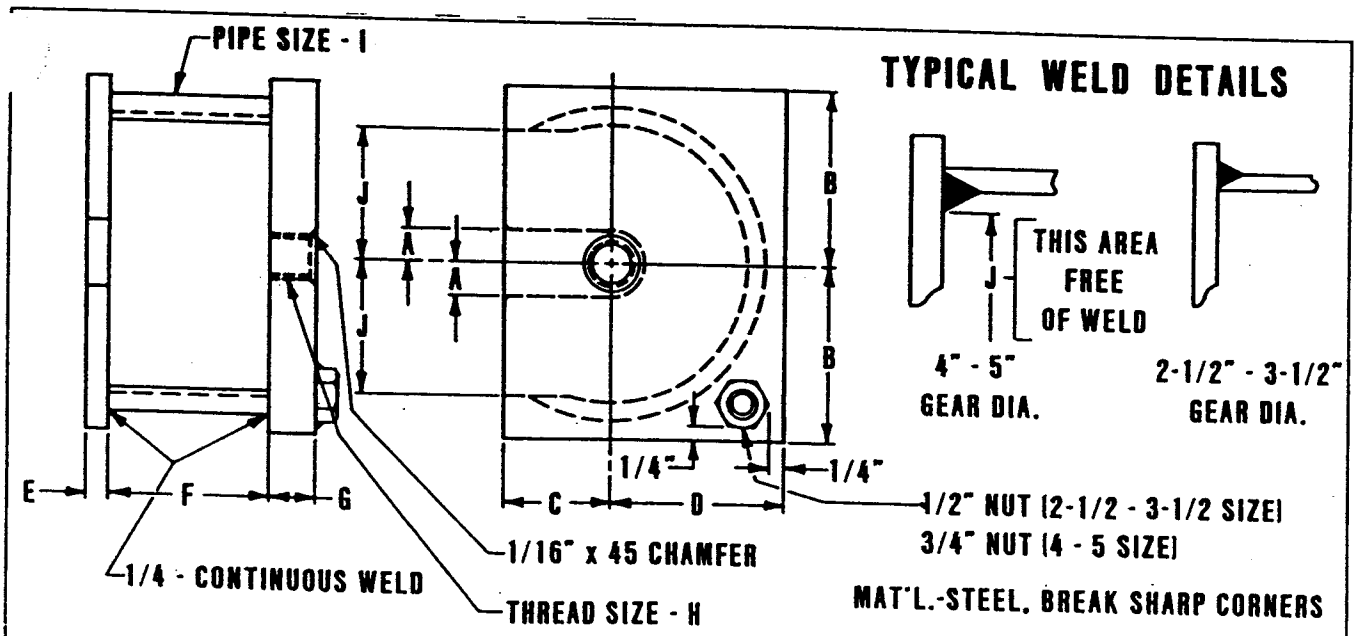

BLOWER SIZE	PART NO.	A	B	C	D	E	F	G	H	I	J
2-1/2	812-977-001	3/8	2	1-1/16	2	1/4	2	5/8	7/16-14	3" SCH. - 40	1-3/8
3-1/2	812-977-002	7/16	2-1/2	1-1/4	2-1/2	5/16	2-3/8	3/4	1/2-13	4" SCH. - 40	1-7/8
4	812-977-003	17/32	2-13/16	1-3/4	2-13/16	3/8	2-1/2	3/4	5/8-11	5" SCH. - 40	2-1/8
5	812-977-004	5/8	3-3/8	2	3-3/8	7/16	3	1	3/4-10	6" SCH. - 40	2-11/16

Figure 10 — Gear Pullers for UNIVERSAL RAI® with Tapered Gear Bores

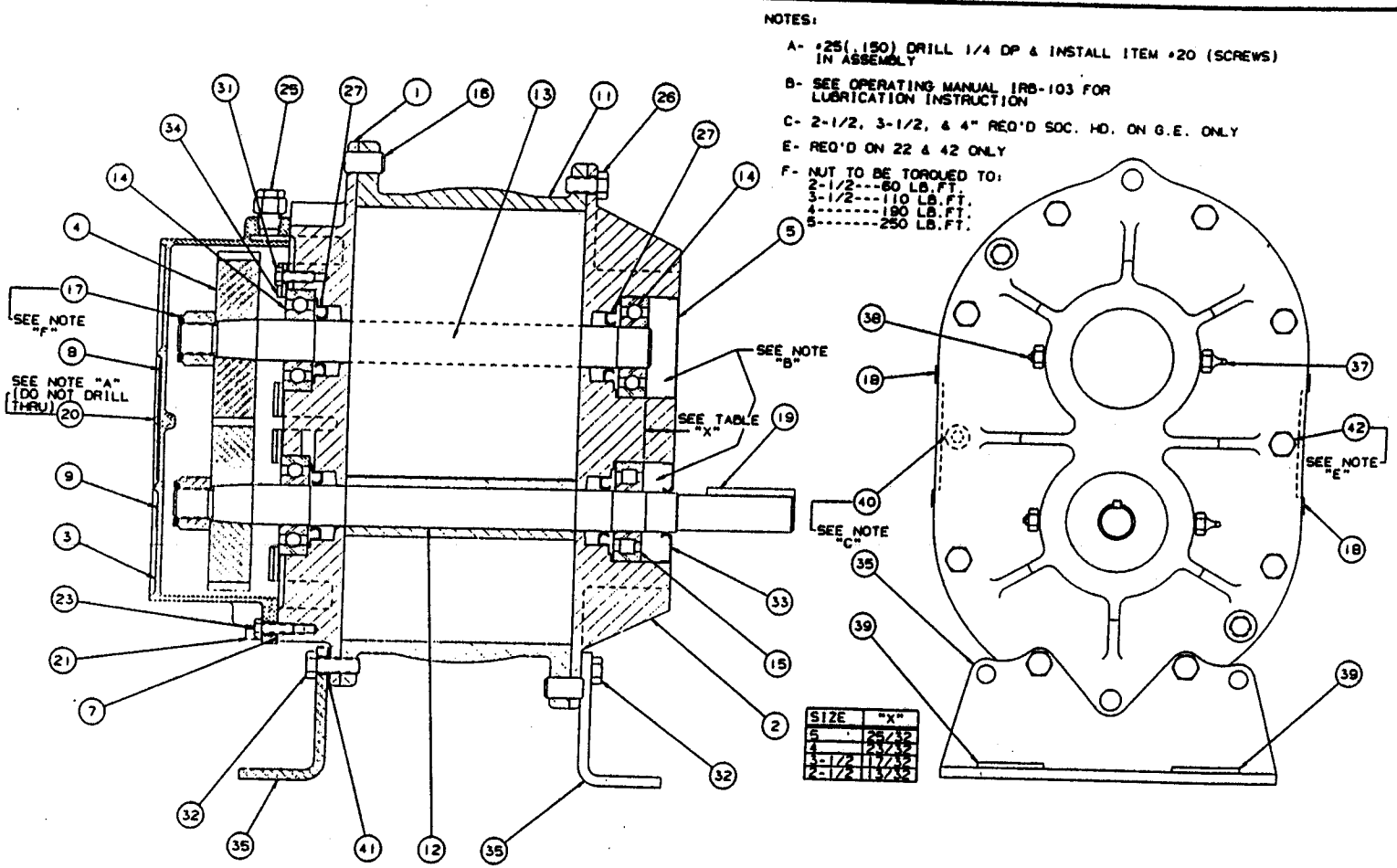

ITEM	PART NAME	ITEM	PART NAME	ITEM	PART NAME	ITEM	PART NAME
1	Headplate Gear End	12	Impeller & Shaft-Drive	21	Plug, Pipe	35	Foot
2	Headplate Drive End	13	Impeller & Shaft-Driven	23	Screw, Hex	37	Fitting, Grease
3	Gearbox	14	Bearing G.E.,-Driven	25	Breather	38	Fitting, Relief
4	Gears	15	Bearing D.E.-Drive	26	Screw, Hex	7	Gasket
5	Cover-Blind	16	Pin, Dowel	27	Seal, Lip	39	Washer Flat
8	Nameplate-Serial Number	17	Gear Nut	31	Screw, Hex	40	Screw Socket
9	Nameplate-Lub	18	Plug Tin	32	Screw, Hex	41	Washer
		19	Key	33	Seal Lip-Drive	42	Screw Hex
11	Cylinder	20	Screw, Self Tap	34	Clamp Plate		

864-720-023

Figure 11 — Assembly of UNIVERSAL RAI® Blowers, 2½"-5" Gear Diameter

FRAME	APPROX. OIL CAPACITY	
	VERTICAL	HORIZONTAL
2-1/2	3.4 FL. OZ.	6.1 FL. OZ.
3-1/2	8.5 FL. OZ.	16 FL. OZ.
4	12.7 FL. OZ.	22.8 FL. OZ.
5	16.0 FL. OZ.	27.6 FL. OZ.

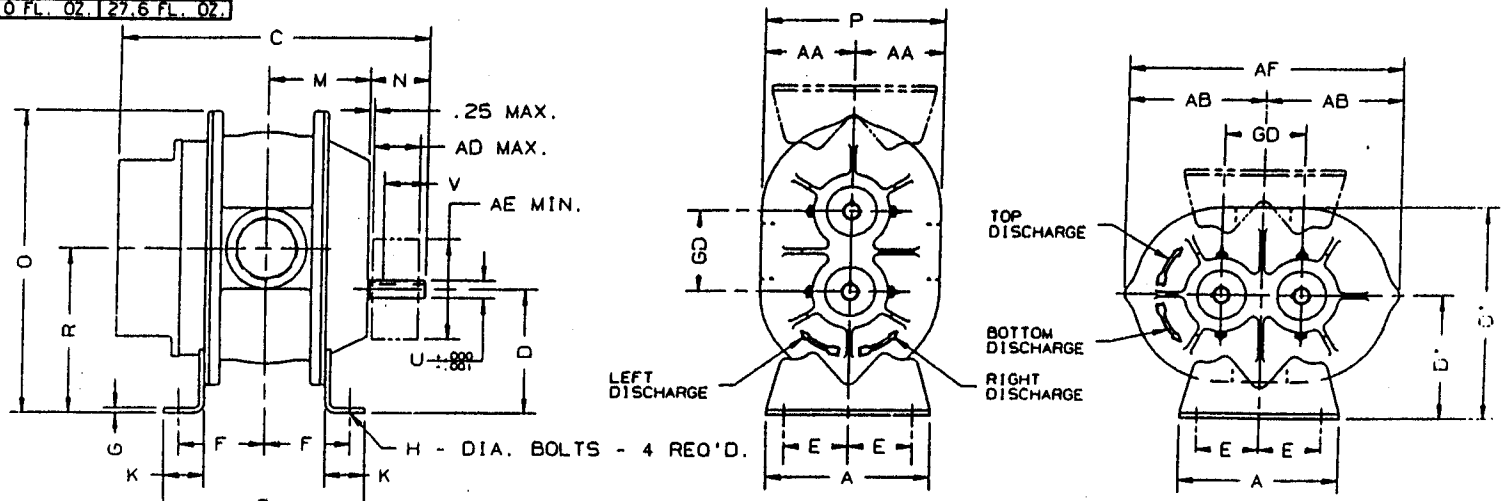

W - INLET & DISCHARGE
AD - SHEAVE WIDTH
AE - SHEAVE DIAMETER

ALL DIMENSIONS IN INCHES

UNIVERSAL RAI BLOWER

FRAME SIZE	GD	A	B	C	D	D'	E MIN.	E MAX.	F MIN.	F MAX.	G	H	K	M	N	O	O'	P	R	U	KEYWAY	W NPT.	V	AA	AB	AD	AE	AF	APPROX. WT. LBS
22	2.5	5.13	5.00	9.75	3.75	3.75	1.50	2.00	2.00	2.00	.25	.38	1.25	2.63	2.50	9.63	6.88	6.25	5.00	.625	.188x.094	1"	1.81	3.13	4.63	1.75	4.00	9.25	32
24	"	"	7.00	11.75	"	"	"	"	3.00	3.00	"	"	"	3.63	"	"	"	"	"	"		2"	"	"	"	"	"	"	"	45
32	3.50	7.25	6.75	11.25	5.00	5.00	2.50	2.88	2.56	2.81	.25	.44	1.75	3.38	2.44	12.81	8.88	7.75	6.75	.750	.188x.094	1-1/4"	1.63	3.88	6.06	1.91	5.00	12.13	69
33	"	"	7.63	12.13	"	"	"	"	3.00	3.25	"	"	"	3.81	"	"	"	"	"	"		2"	"	"	"	"	"	"	"	74
36	"	"	10.00	14.63	"	"	"	"	4.18	4.44	"	"	"	5.00	2.56	"	"	"	"	"		2-1/2"	1.75	"	"	"	"	"	"	102
42	4.00	8.00	7.25	13.00	6.25	6.25	3.00	3.13	2.50	3.13	.31	.44	2.00	3.68	3.18	15.06	10.63	8.75	8.25	.875	.188x.094	1-1/2"	2.31	4.38	6.81	2.31	5.00	13.63	88
45	"	"	10.00	15.50	"	"	"	"	3.56	4.25	"	"	"	5.06	2.94	"	"	"	"	"		2-1/2"	2.13	"	"	"	"	"	"	103
47	"	"	11.75	17.63	"	"	"	"	4.63	5.38	"	"	"	5.94	3.31	"	10.50	8.50	"	"		3"	2.50	4.25	"	"	"	"	"	128
53	5.00	10.50	8.38	15.38	6.25	6.75	3.50	3.50	3.18	3.68	.25	.50	1.88	4.50	3.68	17.38	11.88	10.25	8.75	1.125	.25 x .125	2-1/2"	2.75	5.13	8.63	3.06	6.00	17.25	143
56	"	"	11.00	18.00	"	"	"	"	4.25	5.00	"	"	"	5.81	3.38	"	12.25	11.00	"	"	"	4"	2.50	5.50	"	"	"	"	170
59	"	"	14.00	21.00	"	"	"	"	6.00	6.50	"	"	"	7.31	3.88	"	"	"	"	"	"	4"	3.00	"	"	"	"	"	204

CERTIFIED CORRECT FOR
CUSTOMER ORDER No. _____
ROOTS ORDER No. _____
DATE _____

V-BELT DRIVE DATA
BELTS
DRIVE SHEAVE
DRIVEN SHEAVE
CENTER DISTANCE

DRESSER ROOTS
DRESSER INDUSTRIES, INC.
ROOTS DIVISION
900 WEST MOUNT STREET
CONNERSVILLE, INDIANA 47331

DB 8/29 84
FCH

862-795-021

PRINTED IN U.S.A. /PARTS/XXAD REV DIM A 22624/10-11-84 ADDED WEIGHTS/10-23-84 REV DIM F/3-6-85 REV DIM U/5-85 REV AD DIM/REM/10-7-85 REV FRAME 59/REM/6-9-88 ADDED FRAME 32/RVE/8-22-90 CORRECTED FRAME 36 REM 8-14-94

Figure 12 — Dimensional Assembly of UNIVERSAL RAI® Blower (2½"-5")

FRAME	APPROX. OIL CAPACITY	
	VERTICAL	HORIZONTAL
3-1/2	8.5 FL. OZ.	16 FL. OZ.
4	12.7 FL. OZ.	22.8 FL. OZ.
5	16.0 FL. OZ.	27.6 FL. OZ.

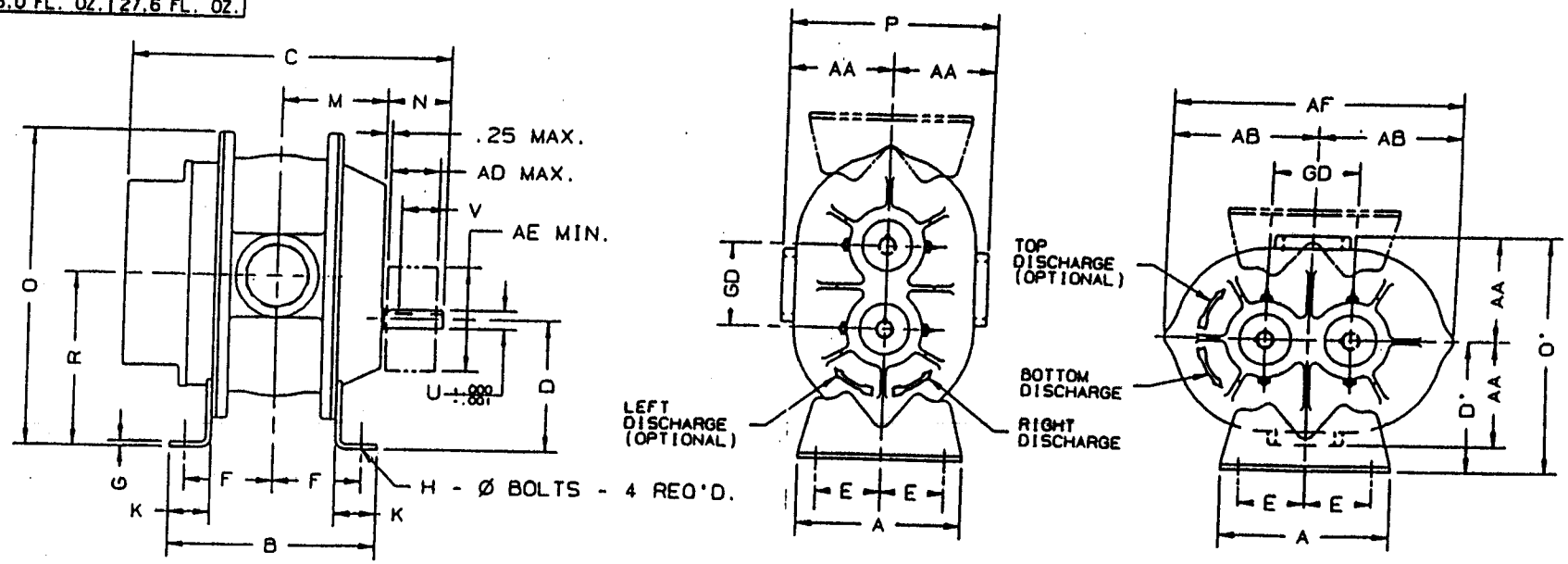

UNIVERSAL RAI-J WHISPAIR BLOWER

W - INLET & DISCHARGE
AD - SHEAVE WIDTH
AE - SHEAVE DIAMETER

ALL DIMENSIONS IN INCHES

FRAME SIZE	GD	A	B	C	D	D'	E MIN.	E MAX.	F MIN.	F MAX.	G	H	K	M	N	O	O'	P	R	U	KEYWAY	W NPT.	V	AA	AB	AD	AE	AF	APPROX. WT. LBS
33	3.50	7.25	7.63	12.13	5.00	5.00	2.50	2.88	3.00	3.25	.25	.44	1.75	3.81	2.44	12.81	10.00	0.006	.75	.750	.188x.094	2"	1.63	5.00	6.06	1.91	5.00	12.13	84
36			10.00	14.63					4.18	4.44				5.00	2.56		10.50	1.00				2-1/2	1.75	5.50					112
45	4.00	8.00	10.00	15.50	6.25	6.25	3.00	3.13	3.56	4.25	.31	.44	2.00	5.06	2.94	15.06	12.25	2.00	8.25	.875	.188x.094	2-1/2"	2.13	6.00	6.81	2.31	5.00	13.63	119
47			11.75	17.63					4.63	5.38				5.94	3.31			12.00				3"	2.50	6.00					138
56	5.00	0.50	11.00	18.00	6.25	6.75	3.50	3.50	4.25	5.00	.25	.50	1.88	5.81	3.38	17.38	14.00	14.50	8.75	.125	.25x.125	4"	2.50	7.25	8.63	3.06	6.00	17.25	180

CERTIFIED CORRECT FOR
CUSTOMER ORDER No. _____
ROOTS ORDER No. _____
DATE _____

V-BELT DRIVE DATA	
BELTS	
DRIVE SHEAVE	B - ADDED FEET BMS 1/31/94
DRIVEN SHEAVE	A - REMOVED ® REM 12/11/92
CENTER DISTANCE	REVISIONS

DRESSER ROOTS

DRESSER INDUSTRIES, INC
ROOTS DIVISION
900 WEST MOUNT STREET
CONNERSVILLE, INDIANA 47331

JHB	CHKD	APP	873-959-021
DR 9-25-92			

Figure 12A – Dimensional Assembly of UNIVERSAL RAI-J® Blower (2½"-5")

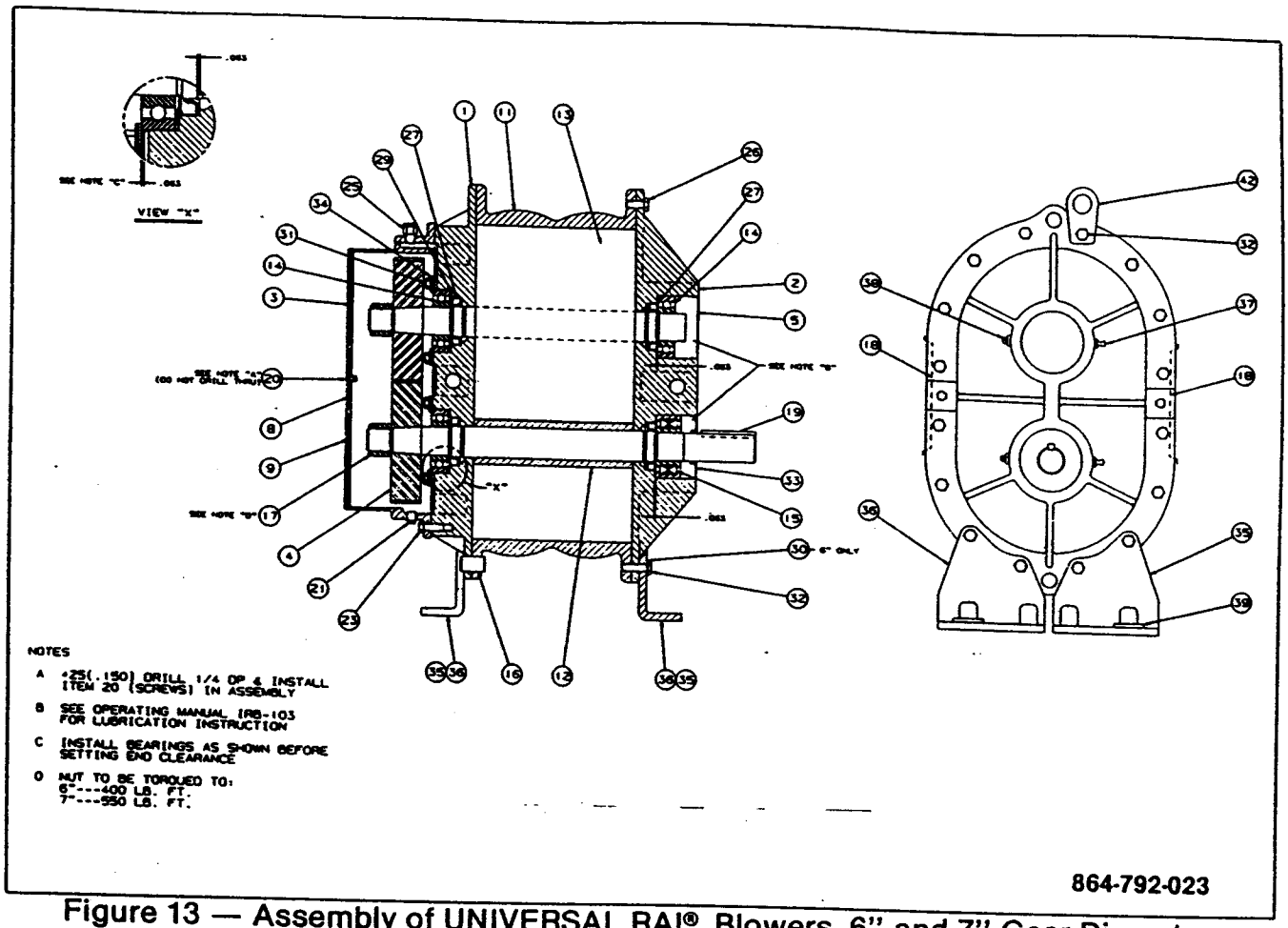

Figure 13 — Assembly of UNIVERSAL RAI® Blowers, 6" and 7" Gear Diameter

PARTS LIST FOR 6"-7" UNIVERSAL RAI®

ITEM	PART NAME	ITEM	PART NAME	ITEM	PART NAME	ITEM	PART NAME
1	Headplate - G.E.	13	Imp & Shaft - Drvn	25	Plug - Vent	36	Foot - Lt. Hand
2	Headplate - D.E.	14	Bearing, Ball	26	Screw, Cap - Hex	37	Fitting, Grease
3	Gearbox	15	Bearing, Roller	27	Seal, Lip	38	Plug - Vent
4	Gear Assembly	16	Pin, Dowel	29	Washer - Wavy Spr.	39	Washer - Oblong
5	Plug - Opening	17	Nut, Stop - Hex	30	Washer	40	Pipe - Tbe. (Close)
7	Gasket, Gearbox	18	Plug - Opening	31	Screw, Cap Hex	41	Coupling - Pipe
8	Nameplate - S/N	19	Key, Square	32	Screw, Cap Hex	42	Lifting Lug
9	Nameplate - Lube	20	Screw, Rd. Hd.	33	Seal, Lip		
11	Cylinder	21	Plug, Pipe - Sq. Hd.	34	Brg. Clamp Plate		
12	Imp & Shaft — Drive	23	Screw, Cap - Hex	35	Foot - Rt. Hand		

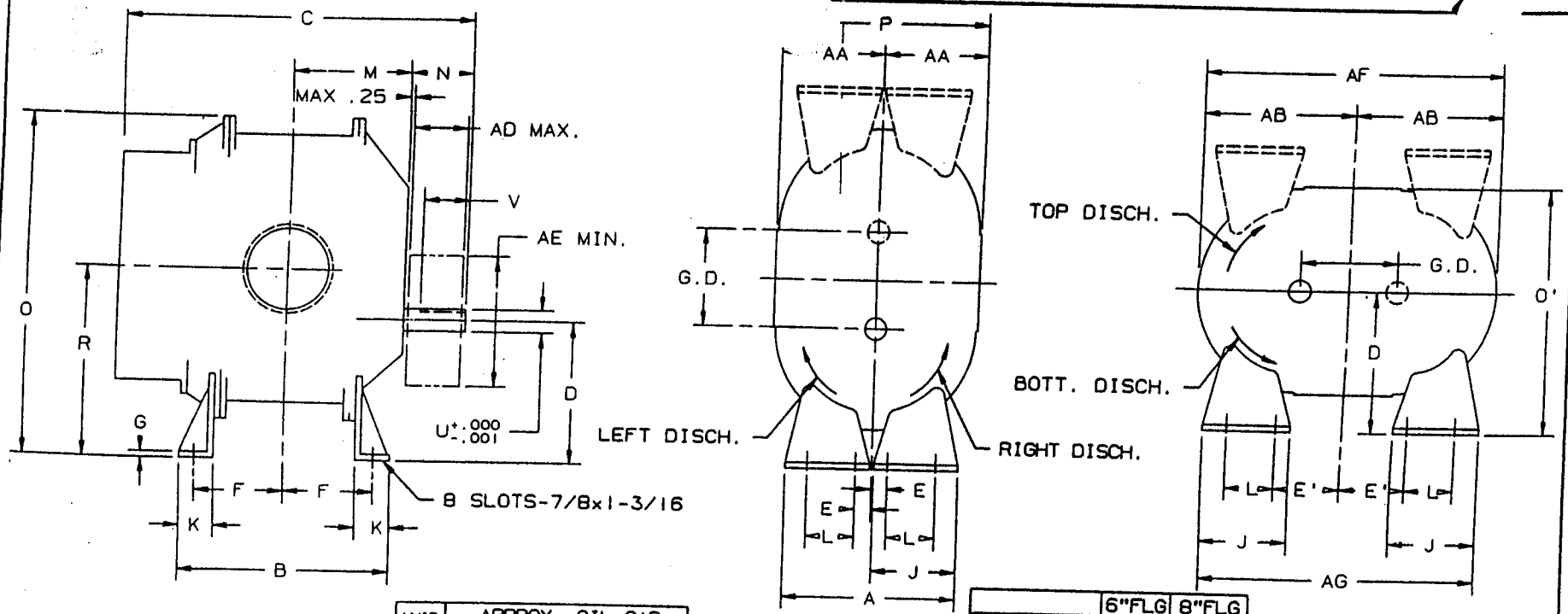

UNIVERSAL RAI® BLOWER

UNIT SIZE	APPROX. OIL CAP. VERT.	APPROX. OIL CAP. HORIZ.	G.D.
6"	28.3 FL OZ	52.1 FL OZ	6.00
7"	32.3 FL OZ	59.5 FL OZ	7.00

	6"FLG	8"FLG
OPENING	6.00	8.00
BOLT CIRCLE	9.50	11.75
FLANGE O.D.	11.00	13.50
NO. TAPPED HOLES	8	8
SIZE HOLES	3/4-10	3/4-10
TAP DEPTH	1.13	1.13

W-INLET
W'-DISCHARGE
AD-SHEAVE WIDTH
AE-SHEAVE DIA.
ALL DIM. IN INCHES

FRAME SIZE	A	B	C	D	E	E'	F	G	J	K	L	M	N	O	O'	P	R	U	V	KEYWAY	W	W'	AA	AB	AD	AE	AF	AG	APPROX WEIGHT
65	11.00	10.00	18.38	8.75	1.00	4.00	3.81	.38	5.38	2.13	3.00	5.63	3.56	21.63	15.13	12.75	11.75	1.375	2.75	.312x.156	3"NPT	3"NPT	6.38	9.88	3.44	8.00	19.75	17.00	245 LBS
68	"	13.00	21.38	"	"	"	5.31	"	"	"	"	7.13	3.69	"	"	"	"	"	"	"	5"NPT	5"NPT	"	"	"	"	"	"	285 LBS
615	"	20.00	28.38	"	"	"	8.81	"	"	"	"	10.63	"	"	16.25	15.00	"	"	"	"	6"FLG	6"FLG	7.50	"	"	"	"	"	425 LBS
76	14.00	11.75	19.94	11.00	2.00	5.50	4.88	.50	6.75	2.38	3.50	5.94	4.06	26.13	20.69	19.38	14.5	1.562	3.00	.375x.188	4"NPT	4"NPT	9.69	11.63	3.75	9.50	23.25	21.00	400 LBS
711	"	16.75	25.19	"	"	"	7.38	"	"	"	"	8.44	4.31	"	19.50	17.00	"	"	"	"	6"FLG	6"FLG	8.50	"	"	"	"	"	530 LBS
718	"	23.75	32.19	"	"	"	10.88	"	"	"	"	11.94	"	"	"	"	"	"	"	"	8"FLG	8"FLG	"	"	"	"	"	"	650 LBS

862-753-021

Figure 14 — Dimensional Assembly of UNIVERSAL RAI® Blower (6" & 7")

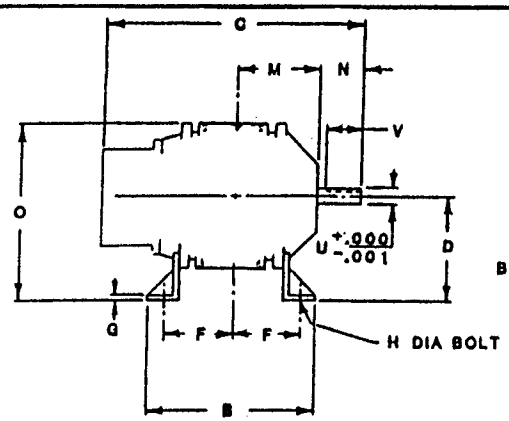

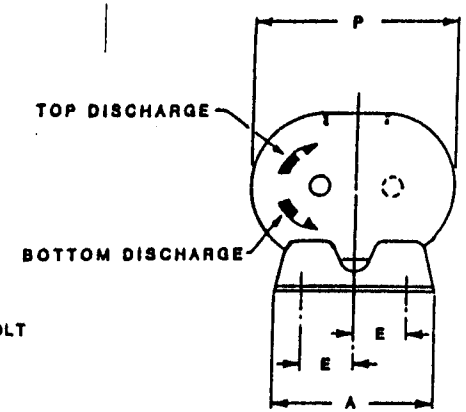

NOTE:
UNIVERSAL RAI

1. 45 & 56 U-RAI WILL HAVE TO RUN AT REDUCED SPEED TO DUPLICATE AF PERFORMANCE.
2. LARGER STANDARD SHAFT THAN AF. SEE DIMENSION "U".
3. U-RAI INLET & OUTLET CONNECTIONS ARE LARGER THAN AF ON THE FOLLOWING SIZES: 24, 45, 47, 56 & 59. SEE DIMENSION "W".
4. 45 U-RAI REPLACES 44 AF. 56 U-RAI REPLACES 55 AF.
5. FOR ADDITIONAL INFORMATION CONTACT YOUR SALES REPRESENTATIVE OR THE FACTORY.

W-INLET & DISCHARGE

ALL DIMENSIONS IN INCHES

DIMENSIONS NOT CERTIFIED FOR CONSTRUCTION

FRAME SIZE	A	B	C	D	E	F	H	M	N	O	P	U	V	KEYWAY	W
22 U-RAI	5.13	5.00	9.75	3.75	2.00	2.00	3/8	2.63	2.50	6.88	9.25	.625	1.81	3/16 x 3/32	1" NPT
22 AF	5.50	5.06	9.13	3.75	2.00	2.00	3/8	2.63	1.94	6.86	9.25	.5875	1.31	3/16 x 3/32	1" NPT
24 U-RAI	5.13	7.00	11.75	3.75	2.00	3.00	3/8	3.63	2.50	6.88	9.25	.625	1.81	3/16 x 3/32	2" NPT
24 AF	5.50	7.06	11.13	3.75	2.00	3.00	3/8	3.63	1.94	6.88	9.25	.5875	1.31	3/16 x 3/32	1-1/2" NPT
33 U-RAI	7.25	7.63	12.13	5.00	2.88	3.00	3/8	3.81	2.44	8.88	12.13	.750	1.63	3/16 x 3/32	2" NPT
33 AF	7.25	7.44	12.56	5.00	2.88	3.00	3/8	3.81	2.63	8.88	12.13	.6562	1.68	3/16 x 3/32	2" NPT
36 U-RAI	7.25	10.00	14.63	5.00	2.88	4.18	3/8	5.00	2.56	8.88	12.13	.750	1.75	3/16 x 3/32	2-1/2" NPT
36 AF	7.25	9.81	14.94	5.00	2.88	4.18	3/8	5.00	2.63	8.88	12.13	.6562	1.88	3/16 x 3/32	2-1/2" NPT
42 U-RAI	8.00	7.25	13.00	6.25	3.13	2.94	3/8	3.68	3.18	10.63	13.63	.875	2.31	3/16 x 3/32	1-1/2" NPT
42 AF	8.25	7.13	12.68	6.25	3.13	2.94	3/8	3.68	3.00	10.63	13.63	.7812	2.38	3/16 x 3/32	1-1/2" NPT
45 U-RAI	8.00	10.00	15.50	6.25	3.13	3.56	3/8	5.06	2.94	10.63	13.63	.875	2.13	3/16 x 3/32	2-1/2" NPT
44 AF	8.25	8.83	14.13	6.25	3.13	3.56	3/8	4.31	3.00	10.63	13.63	.7812	2.38	3/16 x 3/32	2" NPT
47 U-RAI	8.00	11.75	17.63	6.25	3.13	5.18	3/8	5.94	3.31	10.50	13.63	.875	2.50	3/16 x 3/32	3" NPT
47 AF	8.25	11.63	17.38	6.25	3.13	5.18	3/8	5.94	3.00	10.63	13.63	.7812	2.30	3/16 x 3/32	2-1/2" NPT
53 U-RAI	10.50	8.38	15.38	6.75	4.25	3.69	3/8	4.50	3.68	11.88	17.25	1.125	2.75	1/4 x 1/8	2-1/2" NPT
53 AF	10.75	8.81	15.44	6.75	4.25	3.69	3/8	4.50	3.63	12.00	17.25	.9687	2.88	1/4 x 1/8	2-1/2" NPT
56 U-RAI	10.50	11.00	18.00	6.75	4.25	4.25	3/8	5.81	3.38	12.25	17.25	1.125	2.50	1/4 x 1/8	4" NPT
55 AF	10.75	9.81	16.56	6.75	4.25	4.25	3/8	5.06	3.63	12.00	17.25	.9687	2.88	1/4 x 1/8	2-1/2" NPT
59 U-RAI	10.50	14.00	21.18	6.75	4.25	6.50	3/8	7.31	3.38	12.25	17.25	1.125	3.00	1/4 x 1/8	4" NPT
59 AF	10.75	14.31	21.06	6.75	4.25	6.50	3/8	7.31	3.63	12.00	17.25	.9687	2.88	1/4 x 1/8	3" NPT

DRESSER ROOTS
DRESSER INDUSTRIES, INC.
ROOTS OPERATIONS
900 WEST MOUNT STREET,
CONNERSVILLE, INDIANA 47331

PRINTED IN U.S.A.

COMPARING ROOTS UNIVERSAL RAI® TO ROOTS AF

DB 1-7-85

863-813-021

Figure 15

Major Changes when Replacing AF with UNIVERSAL RAI® Blower

Size & Type	Sheave Bushing Dia.	Inlet Size	Disch. Size	Mounting Feet
22 UNIVERSAL RAI® 22 AF	.625" .5875"	1" 1"	1" 1"	Interchangeable
24 UNIVERSAL RAI® 24 AF	.625" .5875"	2" 1½"	2" 1½"	Interchangeable
32 UNIVERSAL RAI® 315 AF	.750" .6562"	1¼" ¾"	1¼" ¾"	Special Feet
33 UNIVERSAL RAI® 33 AF	.750" .6562"	2" 2"	2" 2"	Interchangeable
36 UNIVERSAL RAI® 36 AF	.750" .6562"	2½" 2½"	2½" 2½"	Interchangeable
42 UNIVERSAL RAI® 42 AF	.875" .7812"	1½" 1½"	1½" 1½"	Interchangeable
45 UNIVERSAL RAI® 44 AF	.875" .7812"	2½" 2"	2½" 2"	Reverse Feet
47 UNIVERSAL RAI® 47 AF	.875" .7812"	3" 2½"	3" 2½"	Interchangeable
53 UNIVERSAL RAI® 53 AF	1.250" .9687"	2½" 2½"	2½" 2½"	Special Feet
56 UNIVERSAL RAI® 55 AF	1.250" .9687"	4" 2½"	4" 2½"	Special Feet
59 UNIVERSAL RAI® 59 AF	1.250" .9687"	4" 3"	4" 3"	Special Feet

*To maintain AF performance with UNIVERSAL RAI®, the blower speed will have to be reduced by sheave change. See Fig. 15 drawing for your specific blower size.

CAUTION CAUTION CAUTION

MAKE CERTAIN THAT THE BREATHER IS LOCATED ON TOP AND THE DRAIN PLUG IN THE BOTTOM OF THE GEAR BOX.

Roots Products are sold subject to the current General Terms of Sale, GTS-5001 as modified by the 18 months Uncontested Warranty Policy and Procedure, WP-5020.

REPAIR KIT INFORMATION

UNIVERSAL RAI®			
REF. NO.	QTY.	PART DESCRIPTION	REPAIR KIT PART NOS.
4	1 Pr.	Timing Gear	FRAME SIZE — REPAIR KIT NO.
5	1	Plug — Opening	2" — 65-101-ORK
7	1	Gasket	3" — 65-104-ORK
14	1	Bearing, D.E. — DRVN	4" — 65-107-ORK
14	2	Bearing, G.E.	5" — 65-111-ORK
15	1	Bearing, Dr. Shaft	*6" — 65-115-ORK
17	1	Gear Nut	*7" — 65-119-ORK
27	2	Seals, D.E.	
27	2	Seals, G.E.	
31	4	Capscrew — Selflock	
33	1	Seal — Dr. Shaft	

*Repair kits for the 6" and 7" UNIVERSAL RAI® do not contain gears.

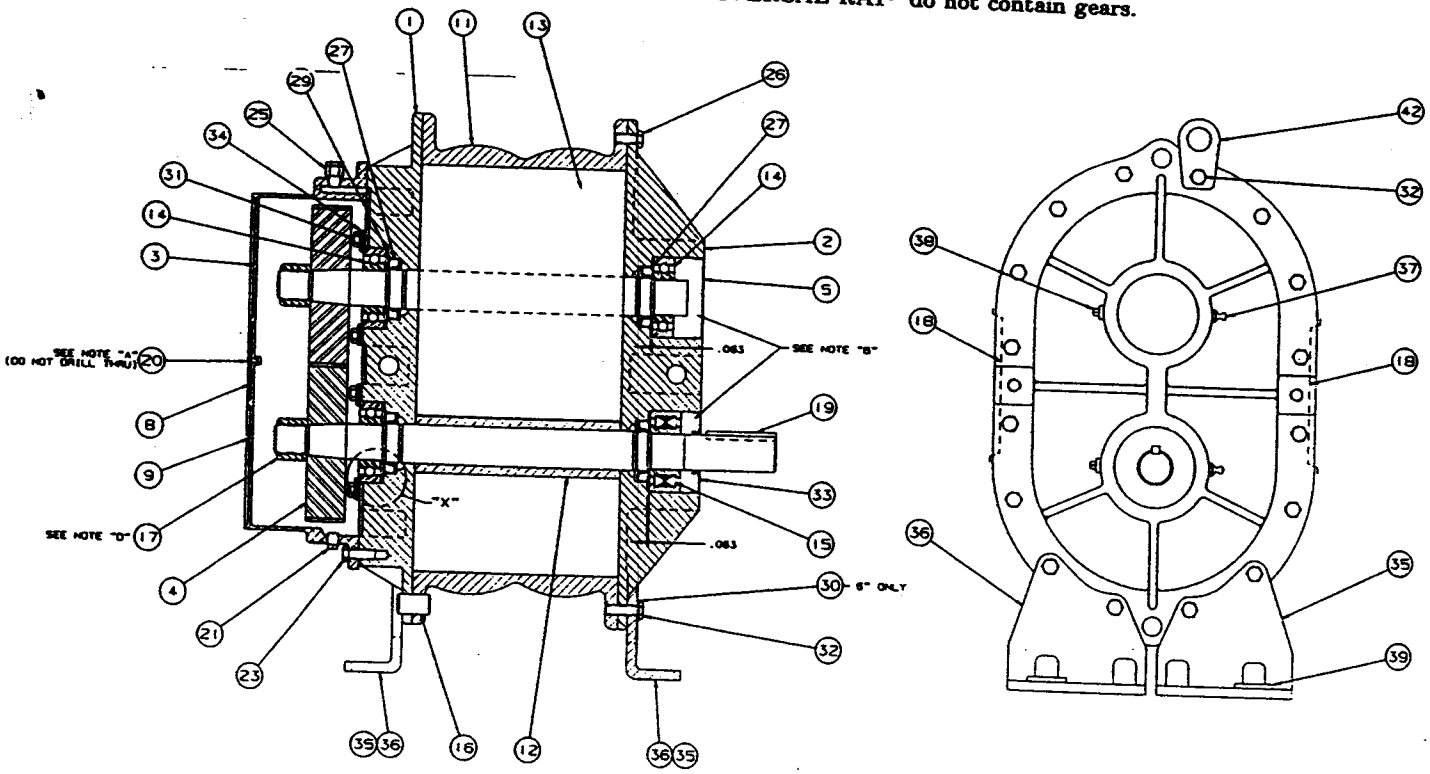

ROOTS SALES/AGENT DIRECTORY

REVISED 4/8/99 SUPERCEDES ALL PREVIOUS ISSUES

ALABAMA
Roots Division, Dresser
P.O. Box 863
Pelham, AL 35124
Shipping Address
c/o Mechanical Sales
713 Thames Court
Pelham, AL 35124
PH: 205/664-0110
FX:205/664-8633
Millie Avery (174)
Jenella King

CALIFORNIA
Roots Division, Dresser
1201 S. Beach Blvd.,
Suite 106
La Habra, CA 90631
PH: 562/947-2599
FX: 562/947-1808
Peggy Hunter

McKenna Engrg. &
Equip. (626)/Agent
340 Maple Avenue
Torrance, CA 90503
PH: 310/328-5520
FX: 310/328-3303
J.R. McKenna
Jim Robbins
Robert Daniels

COLORADO
RO-CAAM, Inc.
(610)/Agent
Soda Creek Drive
green, CO 80439
303/670-0770
303/670-8655
Roger Shultz

RO-CAAM, Inc.
(Branch Office)
886 The Eagle Pass
Durango, CO 81301
PH: 970/259-4935

CONNECTICUT
Roots Division, Dresser
250 East Main Street
Stratford, CT 06614
PH: 203/385-0775
FX: 813/378-1380
John Parrish (031/RM)
Kelle Reed

FLORIDA
Barone Equip. Sales
(616)/Agent
4739-41 Transport Dr.,
Bldg. 5
Tampa, FL 33605
PH: 813/247-7574
FX: 813/247-7630
John Barone

GEORGIA
REP, Inc. (601)/Agent
2405 Murphy Blvd.
Gainesville, GA 30504
PH: 770/538-0020
FX: 770/538-0022
Jim Hene
Len Hene
John Mattick

ILLINOIS
Roots Division, Dresser
2174 Gladstone Court,
Suite A
Glendale Heights, IL 60139
PH: 630/582-0111
FX: 630/582-0430
Vince Schuster (027)/RM
Jeff Aversa (056)
Laura Golubski

KANSAS
Aircorp, Inc. (603)/Agent
7763 Quivira Road
Shawnee, KS 66216
PH: 913/962-1000
FX: 913/962-1449
Bob Baty
Bob Baty, Jr.
Rex Hubbard
Ken Hinkson
Marv Fitzpatrick

LOUISIANA
Kirkwook Company, Inc.
(619)/Agent
2705 Independence St.
Metairie, LA 70006
PH: 504/456-6890
FX: 504/455-8240
A. Gerard Kirkwood
(Centrifugal & 10-20" Rotaries Only)

MASSACHUSETTS
Maher Corp. (617)/Agent
(WWT Market Only)
407R Mystic Avenue
Suite 21
Medford, MA 02155-6326
PH: 781/393-0060
FX: 781/396-0239
Fred Kibble
James DeLuca
Paul Sussman
Peter Kibble

MINNESOTA
Engineering America, Inc.
(609)/Agent
1851 Buerkle Road
White Bear Lake, MN 55110
PH: 651/777-4041
FX: 651/777-5312
Travis Hackworthy
Chuck Singer
Tony Belden
Tony Tripicchio

MISSOURI
Dresser-Rand
(600)/Agent
406 W. 34th Street
VFW Building-Ste. 716
Kansas City, MO 64111-2780
PH: 816/561-1322
FX: 816/561-1133
Dave Johnson
*Centrifugal Market Specialist

NEW JERSEY
Roots Division, Dresser
116 Choctaw Ridge Road
Branchburg, NJ 08876
PH: 908/218-0550
FX: 908/218-0314
Howard Shouffler
(139/131)

Roots Division, Dresser
76 Akers Avenue
Montvale, NJ 07645
PH: 201/391-2049
FX: 201/391-2237
John Parrish (031)/RM
Dennis Hayes (098/137)

Roots Division, Dresser
1906 Vroom Drive
Bridgewater, NJ 08807-7001
PH: 908/253-3896
FX: 908/253-3897
Douglas D. Olenick

OHIO
The Crocker Company
(611)/Agent
3480 Mustafa Drive
Cincinnati, OH 45241
PH: 513/563-6053
FX: 513/563-0329
Bill Worster
Ken Gittinger
Frank Mackell

Tomlin Equipment Co.
(614)/Agent
242 Poplar Street
Toledo, OH 43605
PH: 419/691-3571
FX: 419/691-1928
Steve Rhodes
Wes Jenkins

PENNSYLVANIA
Roots Division, Dresser
St. Clair Building
Suite 306
1725 Washington Road
Pittsburgh, PA 15241
PH: 412/343-5100
FX: 412/831-3240
Dave Roessler (141)

TEXAS
Roots Division, Dresser
1200 W. Sam Houston Pkwy. N
Houston, TX 77043
PH: 713/935-3496
FX: 713/935-3497
Bob Hazzard
(043, 060, 151)
Kathy Spoonemore (066)
Leslie Aaron

Roots Factory Service &
Repair Center
11611B Tanner Road
Houston, TX 77041
PH: 713/896-4810
FX: 713/896-4927
John Conley (150)
Bob Stamm
Chris Arnold

WASHINGTON
APSCO (625)/Agent
P.O. Box 2639
Kirkland, WA 98083
Shipping Address
935 Kirkland Avenue
Kirkland, WA 98033
PH: 425/822-3335
FX: 425/827-6171
Joe Anastasi
Roger Perrin

APSCO (625)/Agent
3173 E. Fox Spit Road
Langley, WA 98260
PH: 360/730-1216
FX: 360/730-1930
Joe Anastasi

CANADA
Beckland Equipment Ltd.
(632)/Agent
3250 Beta Avenue
Burnaby, BC Canada
V5G 4K4
PH: 604/299-8808
FX: 604/299-6162
Harold Bringeland
Tina Klein

PSI Prolew, Inc.
(615)/Agent
163 Labrosse
Point-Claire, Quebec
H9R 1A3 Canada
PH: 514/697-7867
FX: 514/697-0057
Gorden Yapp

MEXICO
Veslo Productos SA de CV
(506)/AGENT
Lamartine No. 160-2o.piso
Colonia Polanco, C.P.
11570, Mexico D.F.
PH: 011-525-545-7942 or
011-525-545-7942
FX: 011-525-531-1682
Roberto Pesqueira Viesca
Director General

PUERTO RICO
Badrena & Preez, Inc.
(628)/Agent
P.O. Box 6368
Loiza Station
San Juan, PR 00914
41 Marginal St. Villamar
Isla Verde, PR 00979
PH: 787/728-7171,
7172,
7173
FX: 787/728-0580
James M. Badrena

ARGENTINA
Orvin S.R.L. (536/Agent)
Cavia 3366
1686 Hurlingham,
BS. AS., Argentina
PH: 011-5411-4662-6742
FX: 011-5411-4452-0171
Raul G. Cartledge

CHILE
Tecnica Hansa Ltda.
(529/Agent)
Marchant Pereira 540
Providencia Santiago-
Chile
PH: 011-562-2045348
011-562-2090957
011-562-2040732
FX: 011-562-2045231
011-562-2045799
Arnold D. Droste

COLOMBIA
Servitool Ltda.
(520/Agent)
Carrera 58 N0. 14-14
Apartado Aereo 90688
Bogota, Colombia
PH: 011-571-4203599
011-571-2616315
FX: 011-571-4137180
Cesar Martinez

PERU
Representaciones
Peruvian Trading S.A.
(526/Agent)
Pasaje Los Jilgueros 108
Urb. Limatambo,
Surquillo Lima 34 Peru
PH: 011-51-14-428209
FX: 011-51-14-428559
Pablo A. Lira

VENEZUELA
Professional Services
Intl. (PSI) (514/Agent)*
Parque, Boyaca
Torre Centro,
PISO 18, No. 183
Av. Sucre, Los Dos
Caminos
Caracas, Venezuela
PH: 011-58-2-2844990
FX: 011-58-2-2861977
Jose Zozaya M.

WEST INDIES
H.J. Gransaull & Co. Ltd.
(516/Agent)
P.O. Box 98
San Fernando, Trinidad
West Indies
PH: 868/657-7151
868/657-8015
FX: 868/652-5575
Shawn Spencer

HUDDERSFIELD
Dresser Roots Intl.
Sales Operations (323)
P.O. Box B7
Off St. Andrews Road
Turnbridge, Huddersfield
England HD1 6RB
PH: 011-44-01484-422222
FX: 011-44-01484-422668

HOLLAND
Dresser Roots Intl. Sales
Operations
Kerkstraat 6
5051 LB Goirle
Holland
PH: 011-31-135-300770
FX: 011-31-135-300760

*SPECIAL AGREEMENT

Operating Instructions

For your safety, read and retain this manual.

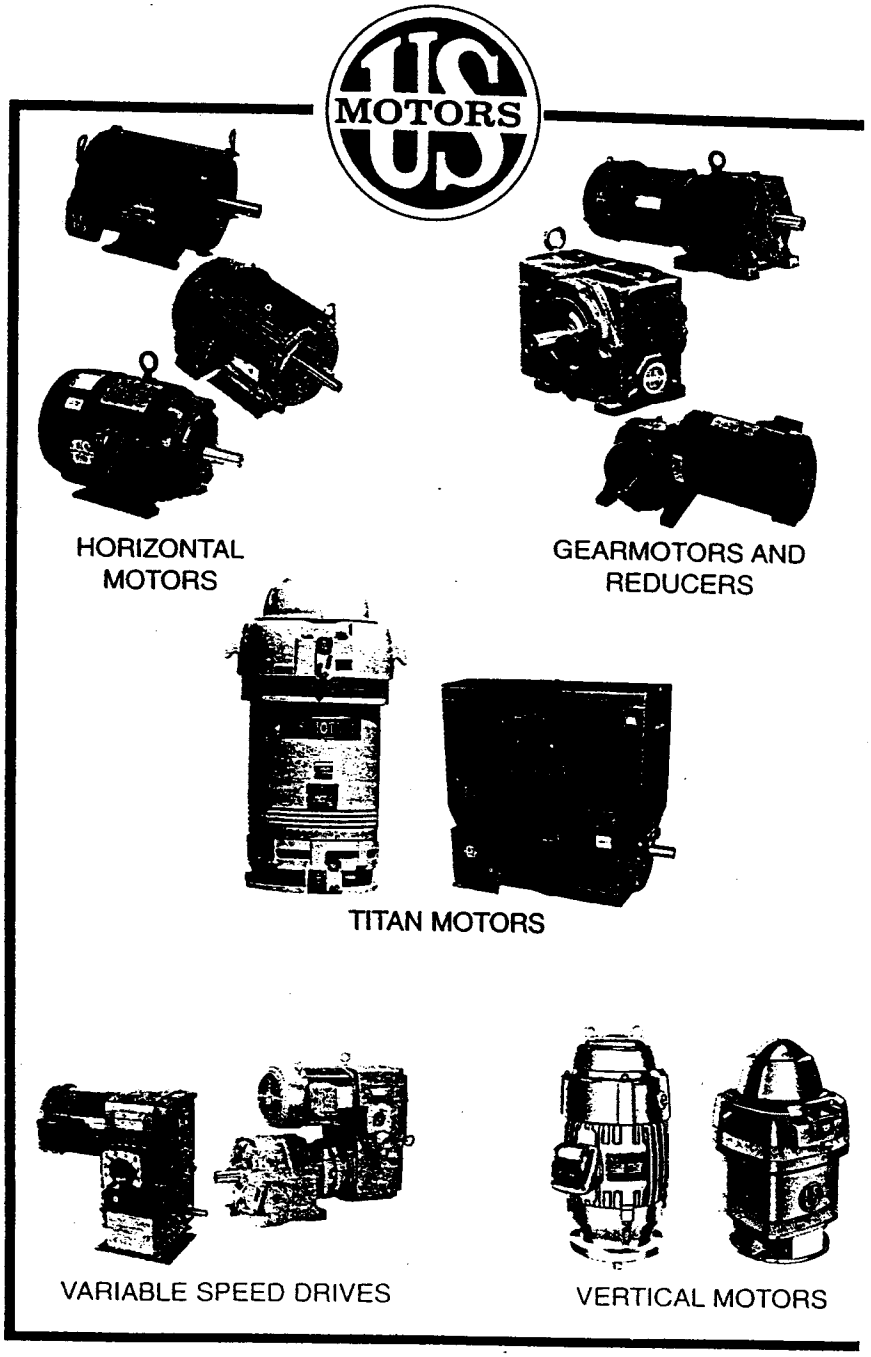

U.S. ELECTRICAL MOTORS

DIVISION OF EMERSON ELECTRIC CO.
ST. LOUIS, MO

Send for free brochure by product name.

P83366
REV. 11/97

EMERSON.

INSTALLATION, O

SAFETY FIRST

High voltage and rotating parts can cause serious or fatal injury. Safe installation, operation and maintenance must be performed by qualified personnel. Familiarization with, and adherence to, NEMA MG2, the National Electrical Code (NEC), and local codes is required. It is important to observe safety precautions to protect personnel from possible injury. Personnel should be instructed to:

1. Be familiar with the equipment and read all instructions thoroughly before installing or working on equipment.
2. Avoid contact with energized circuits or rotating parts.
3. Disconnect all power sources before initiating any maintenance or repair.
4. Act with care in accordance with prescribed procedures in handling and lifting this equipment.
5. Be sure unit is electrically grounded in accordance with code requirements.
6. Be sure equipment is properly enclosed or protected to prevent access by children or other unauthorized personnel to prevent possible accidents.
7. Be sure shaft key is fully captive before unit is energized.
8. Avoid contact with capacitors until safe discharge procedures have been completed.
9. Provide proper guarding for personnel against rotating parts and applications involving high inertia loads which can cause overspeed.
10. Avoid extended exposure to equipment with high noise levels.

INSPECTION AND HANDLING

Inspect unit to make sure no damage has occurred during shipment. Check nameplate for correct speed, horsepower, voltage, Hertz and phase for conformance with power supply and equipment. WARNING: Units should be lifted using all eyebolts or lugs if provided. These eyebolts or lugs are provided for lifting this unit only and must not be used to lift any additional weight. Lifting angle, from shank of eyebolt, must not exceed 30 degrees for machines with single and 45 degrees for machines with multiple lifting means. Replacement eyebolts must be per ASTM A489 or equivalent. All eyebolts must be securely tightened. Be careful not to touch overhead power lines with lifting equipment. Failure to observe this warning may result in serious personal injury.

STORAGE

Units should be stored indoors, in a clean, dry location & winding should be protected from excessive moisture absorption. NOTE: If motors are to be stored for over one year, refer to U.S. Electrical Motors. If gear and belt transmission units are to be stored for over six months, refer to U.S. Electrical Motors.

LOCATION

WARNING: Use only UL Listed Hazardous Location Motors for service in Hazardous Locations as defined in Article 500 of the NEC. Units should be located in a clean, well-ventilated area. WARNING: Units should be located in a suitable enclosure or protected to prevent access by children or other unauthorized personnel to prevent possible accidents.

INSTALLATION / MOUNTING

Mount unit on a firm, flat surface sufficiently rigid to prevent vibration. Drive belts and chains should be tensioned in accordance with supplier recommendations. Couplings

should be properly aligned and balanced. For belt, chain and gear drive selection refer to the drive or equipment manufacturer. For application of drive equipment refer to applicable information in NEMA MG1.

Motors have been dynamically balanced using a half key the same length as the full key shipped with the motor. If pulley length is less than this length, rework long key by removing one-half of excess length between pulley and end of key to maintain balance.

Do not restrict motor ventilation. Unless otherwise specified on nameplate, motor is designed for operation in accordance with NEMA MG1 "Usual Service Conditions" which states an ambient temperature range of –15° C to 40° C (5° F to 104° F). Standard grease lubricated units are suitable for operation within this temperature range, special lubricants may be required for ambient temperatures outside of this range. Note: Motors operating under rated load and allowable ambient conditions may feel hot when touched; this is normal and should not be cause for concern. When in doubt, measure frame surface temperature and confer with nearest office. Enclosed motors normally have condensation drain openings. Insure that drain openings are properly located and open (plugs removed) for the motor mounting position. Drain openings should be at lowest point of end brackets, frame housing and terminal housing when the motor is installed. This may require modification of motor to accomplish. If unit appears wet, and/or has been stored in a damp location, dry out thoroughly and check for adequate insulation resistance to ground before operating.

WARNING: Guards should be provided for all exposed rotating parts to prevent possible personal injury. Keep fingers and foreign objects away from ventilation and other openings. Applications involving *high inertia loads* may damage this equipment due to motor overspeed during shutdown. Such applications should be referred to U.S. Electrical Motors.

CAUTION: Do not force drive coupling or other equipment onto shaft, as bearing damage may result.

POWER SUPPLY AND CONNECTIONS

The power supply must agree with values on nameplate. Terminal voltage should not vary more than ±10% of nameplate voltage at rated frequency. Unbalanced line voltage, greater than one percent, can cause overheating. Do not exceed the rated load amperes on the nameplate. Starting controls and overload protection should be properly sized in accordance with the NEC and the control manufacturer's recommendations.

Motor connections should be made by following instructions on connection diagram. Determine direction of rotation before connecting driven equipment. If direction of rotation label is supplied, operate only in specified direction. Rotation may be reversed on three phase motors by interchanging any two line connections. On single phase motors interchange leads per connection diagram on motor. Wiring of units, controls and grounding shall be in accordance with local and NEC requirements. WARNING: Failure to properly ground unit may cause serious injury to personnel. Where unexpected starting could be hazardous to personnel, do not use automatic reset starting devices.

USE OF VARIABLE FREQUENCY DRIVES

Electric motors can be detrimentally affected when applied with variable frequency drives (VFD's). The non-sinusoidal waveforms of VFD's have harmonic content which causes additional motor heating; and high voltage peaks and short rise times, which result in increased insulation stress, especially when long power cable lengths are used.

E INSTRUCTIONS

Other effects of VFD's on motor performance include reduced efficiency, increased load current, vibration and noise. Standard motors utilized with VFD's must be limited to those application considerations defined in NEMA MG-1 Part 30.

NEMA MG-1 Part 31 defines performance and application considerations for Definite-Purpose Inverter Fed Motors. To insure satisfactory performance and reliability, U.S. Electrical Motors offers and recommends nameplated inverter duty motor products which meet the requirements of NEMA MG-1 Part 31. The use of non-inverter duty motors may result in unsatisfactory performance or premature failure, which may not be warrantable under the Terms and Conditions of Sale. Contact your U.S. Electrical Motors Field Sales Engineer for technical assistance for motor selection, application and warranty details.

OIL LUBRICATION

Most oil lubricated units are shipped without oil. Refer to instructions for specific type and grade of oil to be used, change interval and level. If lubrication instructions specify synthetic oil, do not substitute. WARNING: For applications in the food and drug industry (including animal food), consult the petroleum supplier for lubricants that are acceptable to the Food and Drug Administration and other governing bodies.

MAINTENANCE

Inspect units at regular intervals. Keep units clean and ventilation openings clear of dust, dirt or other debris. Lubricate units per this operating instruction folder and instruction plate on unit. Excessive lubrication may damage the unit. Do not overgrease. WARNING: Disconnect all power sources to the unit and discharge all parts which may retain an electrical charge before attempting any maintenance or repair. Screen and covers must be maintained in place when unit is in operation. Failure to observe this warning may result in personal injury.

U.L. listed Motors For Use in Hazardous Locations: Repair of these motors must be made by the manufacturer or manufacturer's authorized service station approved to repair U.L. Listed Motors. The U.L. listing applies to the electric motor only and not to the belt or gear transmissions or other devices that may be connected to the motor.

VARIDRIVE UNITS

Do not turn speed control hand wheel while unit is not operating; this may cause damage to the unit. Handwheel position is a relative speed indication only. Use direct speed sensing accessory for precise speed indication. Units equipped with electric remote speed indicator accessory are not calibrated at the factory and must be calibrated at site. Refer to calibration instructions with the unit.

VARIDRIVES equipped with ENDOLUBE construction do not require lubrication of the sliding Varidisc. Operate VARIDRIVE through its entire speed range weekly. WARNING: Do not force control wheel beyond speed limits shown on the nameplate. The mechanism and belt are designed for the rated speed and horsepower shown on the nameplate. Operation beyond these limits may result in damage to the belt and mechanism and possible injury to personnel. The covers on the frame case must not be removed or left off while unit is in operation. Do not attempt to disassemble or repair the driven pulley discs because high spring tension may be released causing injury to personnel. Refer to authorized Service Center. Refer to VARIDRIVE Installation and Maintenance Manual for complete belt changing instructions. For additional detailed information, request specific product installation and maintenance manual.

GREASE LUBRICATION INSTRUCTIONS

Units are prelubricated at the factory and do not require initial lubrication. Relubricating interval depends upon speed, type of bearing and service. Refer to Table 1 for suggested regreasing intervals. Operating conditions may dictate more frequent lubrication. Motor must be at rest and electrical controls should be locked open to prevent energizing while motor is being serviced (refer to section on Safety). If motor is being taken out of storage, refer to storage procedures.

To relubricate bearings, remove the drain plug. Inspect grease drain and remove any blockage with a mechanical probe taking care not to damage bearing. CAUTION: Under no circumstances should a mechanical probe be used while the motor is in operation. Add new grease at the grease inlet, refer to Table 1 for replenishment quantities. New grease must be compatible with grease in the motor (See Caution Note). Run the motor for 15 to 30 minutes with the drain plug removed to allow purging of any excess grease. Shut off unit and replace the drain plug. Return motor to service.

CAUTION

Overgreasing can cause excessive bearing temperatures, premature lubricant breakdown and bearing failure. Care should be exercised against overgreasing.

Table 1
Recommended Grease Replenishment Quantities & Intervals
(For lubrication of units in service)

Bearing Number	Grease Fl. Oz.	Lubrication Interval		
		3600 RPM	1800 RPM	1200 RPM
6203 through 6208	0.2	2 Years	3 years	3 Years
6209 through 6309	0.4	1 Year	2 Years	2 Years
6310 through 6311	0.6	1 Year	2 Years	2 Years
6312 through 6217	0.8	1 Year	1 Year	2 Years
6218 through 6220	1.0	6 Mo	1 Year	2 Years

For motors mounted vertically or in hostile environments, reduce intervals shown by 50 percent.

Refer to motor nameplate for bearings provided on a specific motor.

For bearings not listed in table above, the amount of grease required may be calculated by the formula:

Where; $G = 0.11 \times D \times B$

G = Quantity of grease in fluid ounces.
D = Outside diameter of bearing in inches.
B = Width of bearing in inches.

Table 2
RECOMMENDED GREASES

THE FOLLOWING GREASES ARE INTERCHANGEABLE WITH THE GREASE AS PROVIDED IN UNITS SUPPLIED FROM FACTORY (UNLESS STATED OTHERWISE ON A LUBRICATION NAMEPLATE PROVIDED ON MOTOR).

MANUFACTURER	GREASE (NLGI No. 2)
CHEVRON U.S.A. INC.	SRI No. 2
SHELL OIL CO.	DOLIUM-R

CAUTION

Greases of different bases (lithium, polyurea, clay, etc.) may not be compatible when mixed. Mixing such greases can result in reduced lubricant life and premature bearing failure. When necessary, prevent such intermixing by disassembling the motor, removing all old grease from bearings and housings (including all grease fill and drain holes). Inspect and replace damaged bearings. Fill bearing housings and bearing approximately 30% full of new grease. Remove any excess grease extending beyond the edges of the bearing races and retainers. Refer to Table 2 for recommended greases.

WARRANTY

LIMITED WARRANTY

All U.S.E.M. products are warranted against defects in workmanship and materials for 12 months from date of installation, not to exceed 18 months from date of shipment from U.S.E.M. Some of U.S.E.M.'s products carry a warranty period longer than 12 months. Please refer to the current price catalog or to U.S.E.M. for details on specific products. This limited warranty does not apply to any product which has been subject to misuse, misapplication, neglect (including without limitation, inadequate maintenance), accident, improper installation, modification, adjustment, or repair. This constitutes U.S.E.M.'s only warranty in connection with this sale and is in lieu of all other warranties, expressed or implied, written or oral. THERE ARE NO IMPLIED WARRANTIES OF MERCHANTABILITY OR FITNESS FOR A PARTICULAR PURPOSE THAT APPLY TO THIS SALE. No employee, agent, dealer or other person is authorized to give any warranties on behalf of U.S.E.M. nor to assume for U.S.E.M. any other liability in connection with any of its products.

EXCLUSIVE REMEDY

U.S.E.M.'s liability shall be limited exclusively to repairing or replacing any product found by U.S.E.M. to be defective, or at U.S.E.M.'s option, to refund the purchase price of its product. Such product shall be returned, freight prepaid, to the nearest U.S.E.M. authorized service station or U.S.E.M. factory. It is agreed that such replacement, repair, or refund be the sole and exclusive remedies available from U.S.E.M.. U.S.E.M. shall not be liable for damages of any sort whatsoever beyond these exclusive remedies including incidental and consequential damages regardless of whether any claim is based upon contract, negligence, strict liability, tort, warranty, or other basis. The repair or replacement of the product, or the refund of the purchase price, at U.S.E.M.'s option, constitutes fulfillment of all liabilities of U.S.E.M. to the buyer for defective products.

RENEWAL PARTS AND WARRANTY SERVICE

When inquiring for renewal parts, call the nearest U.S. Electrical Motors Parts Stocking Distributor. For warranty service, call the nearest U.S. Electrical Motors Authorized Service Station. Give them complete Nameplate data, including identification number, etc.

Request installation and maintenance manuals by product name.

SALES REGION	PHONE	TOLL-FREE	FAX
ORANGE, CONNECTICUT	203 - 891 - 1080	800 - 243 - 2700	203 - 891 - 1077
CHICAGO, ILLINOIS	630 - 924 - 5200	800 - 323 - 5223	630 - 893 - 0182
MEMPHIS, TENNESSEE	901 - 794 - 5500	N/A	901 - 366 - 2661
DALLAS, TEXAS	972 - 644 - 0470	800 - 683 - 4126	972 - 644 - 0254
SANTA FE SPRINGS, CA	562 - 906 - 3945	800 - 854 - 3302	562 - 941 - 1858
INTERNATIONAL SALES	314 - 553 - 2150	N/A	314 - 553 - 2135
MONTREAL, QUEBEC/CAN.	514 - 332 - 1880	800 - 361 - 5509	514 - 332 - 5912
MARKHAM, ONTARIO/CAN.	905 - 475 - 4670	N/A	905 - 475 - 4672
MONTERREY, MEXICO	528 - 389 - 1300	N/A	528 - 389 - 1320
CARACAS, VENEZUELA	582 - 285 - 2695	N/A	582 - 285 - 4475
BOGOTA, COLOMBIA	571 - 250 - 2886	N/A	571 - 311 - 9320

FOR SERVICE CALL:

NEAREST U.S.E.M. AUTHORIZED SERVICE STATION OR U.S.E.M. PRODUCT SERVICE ST. LOUIS, MO 314-595-8544.

VISIT OUR WEB SITE www.usmotors.com

SERIES DS-300 FLOW SENSORS

Installation and Operating Instructions, Flow Calculations

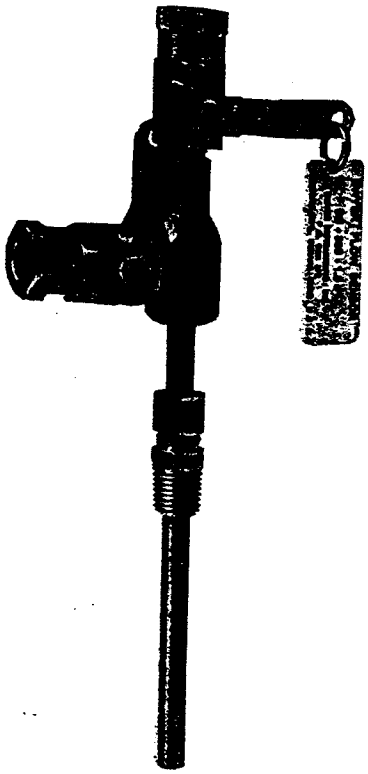

INSPECTION

Inspect the sensor upon receipt of shipment to be certain it is as ordered and not damaged. If damaged, contact carrier.

INSTALLATION

General – The sensing ports of the flow sensor must be correctly positioned for measurement accuracy. The instrument connections on the sensor indicate correct positioning. The side connection is for total or high pressure and should be pointed upstream. The top connection is for static or low pressure.

Location – The sensor should be installed in the flowing line with as much straight run of pipe upstream as possible. This will provide a flow profile as ideal as possible. A rule of thumb is to allow 10-15 pipe diameters upstream and 5 down. The table below lists recommended up and down piping:

PRESSURE AND TEMPERATURE

Maximum 200 psig at 200°F.

UPSTREAM AND DOWNSTREAM DIMENSIONS IN TERMS OF INTERNAL DIAMETER OF PIPE

*SEE NOTE #1

UPSTREAM CONDITION	MINIMUM DIAMETER OF STRAIGHT PIPE		
	UPSTREAM		DOWNSTREAM
	IN-PLANE	OUT OF PLANE	
One Elbow or Tee	7	9	5
Two 90° Bends in Same Plane	8	12	5
Two 90° Bends in Different Plane	18	24	5
Reducers or Expanders	8	8	5
All Valves *See Note 2	24	24	5

*Note #1: Values shown are recommended spacing, in terms of internal diameter for normal industrial metering requirements. For laboratory or high accuracy work, add 25% to values.

*Note #2: Includes gate, globe, plug and other throttling valves that are only partially opened. If valve is to be fully open, use values for pipe size change. CONTROL VALVES SHOULD BE LOCATED AFTER THE FLOW SENSOR.

DWYER INSTRUMENTS, INC.
P.O. BOX 373 • MICHIGAN CITY, INDIANA 46361 U.S.A.
Telephone 219/879-[illegible]
Fax 219/872-9057

POSITION

Be certain there is sufficient clearance between the mounting position and other pipes, walls, structures, etc, so that the sensor can be inserted through the mounting unit once the mounting unit has been installed onto the pipe.

Flow Sensors should be positioned to keep air out of the instrument connecting lines on liquid flows and condensate out of the lines on gas flows. The easiest way to assure this is to install the sensor into the pipe so that air will bleed into, or condensate will drain back to, the pipe.

For air or gas flow:
Install in upper quadrant of pipe

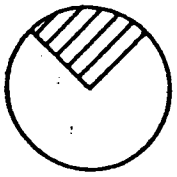

Condensate drains back to pipe

For liquid or steam flow:
Install in lower quadrant of pipe

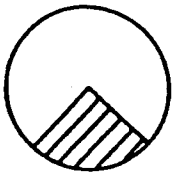

Air bleeds back to pipe.

INSTALLATION

1. When using an A-160 thred-o-let, weld it to the pipe wall. If replacing a DS-200 unit, an A-161 bushing (1/4"×3/8") will be needed.
2. Drill through the center of the thred-o-let into the pipe, with a drill that is slightly larger than the flow sensor diameter.
3. Install the packing gland using proper pipe sealant. If the packing gland is disassembled, note that the tapered end of the ferrule goes into the fitting body.
4. Insert the sensor until it bottoms against the opposite wall of the pipe, then withdraw 1/16" to allow for thermal expansion.
5. Tighten packing gland nut finger tight. Then tighten the nut with a wrench an additional 1 1/4 turns. Be sure to hold the sensor body with a second wrench to prevent the sensor from turning.

INSTRUMENT CONNECTION

Connect the side pressure tap to the high pressure port of the Magnehelic (air only) or Capsuhelic gage or transmitting instrument and the top connection to the low pressure port. See the connection schematics below.

Bleed air from instrument piping on liquid flows. Drain any condensate from the instrument piping on air and gas flows.

Open valves to instrument to place flow meter into service. For permanent installations, a 3-valve manifold is recommended to allow the gage to be zero checked without interrupting the flow. The Dwyer A-471 Portable Test Kit includes such a device.

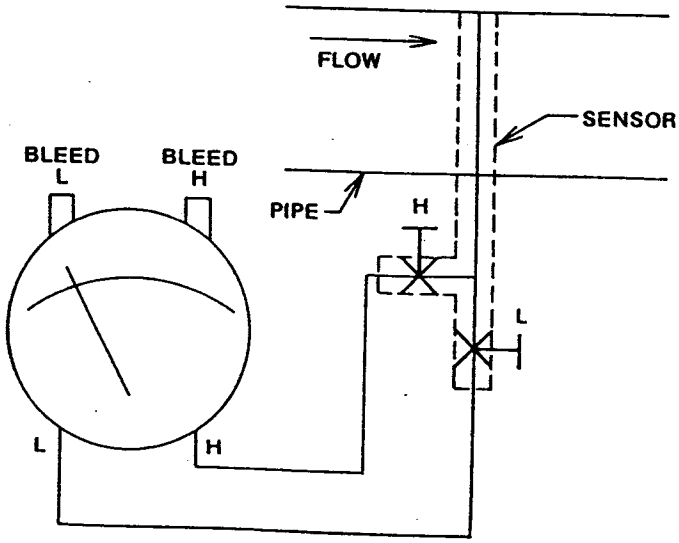

WATER FLOW

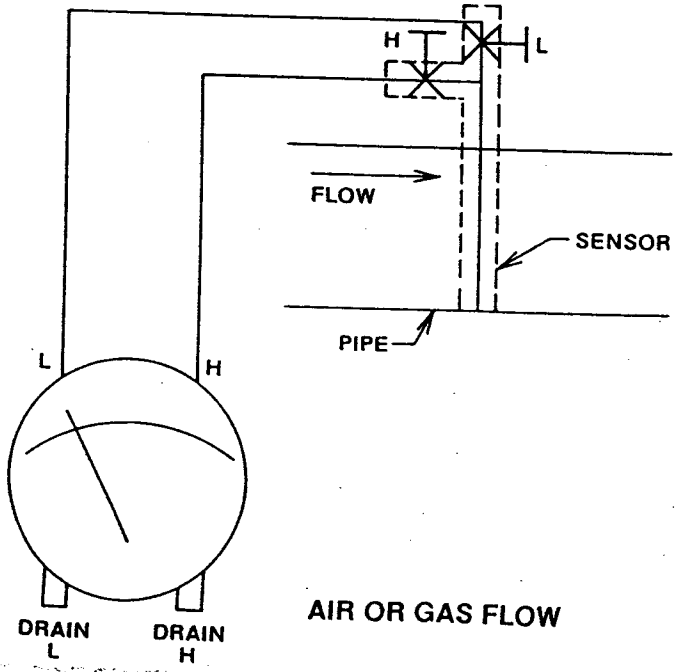

AIR OR GAS FLOW

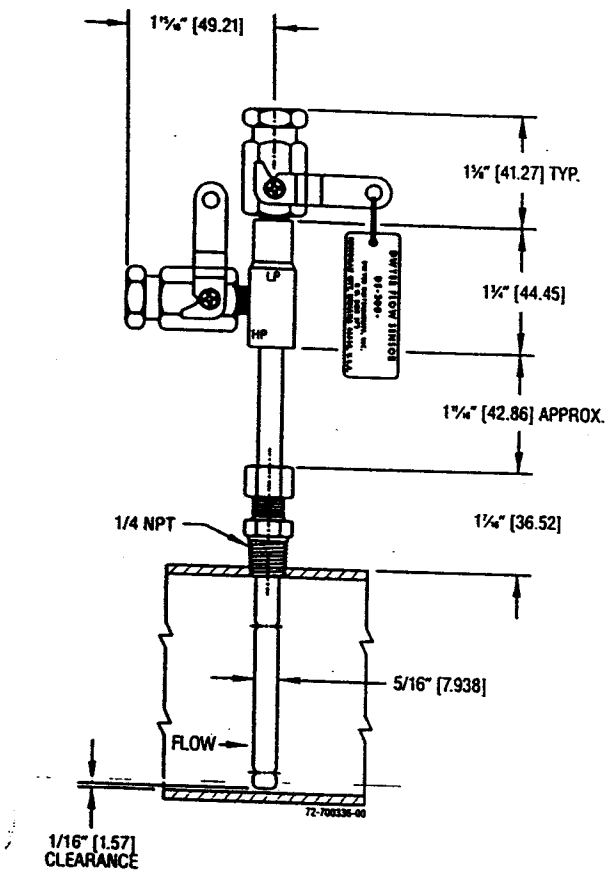

FLOW CALCULATIONS AND CHARTS

The following information contains tables and equations for determining the differential pressure developed by the DS-300 Flow Sensor for various flow rates of water, steam, air or other gases in different pipe sizes.

This information can be used to prepare conversion charts to translate the differential pressure readings being sensed into the equivalent flow rate. Where direct readout of flow is required, use this information to calculate the full flow differential pressure in order to specify the exact range of Dwyer Magnehelic or Capsuhelic gage required. Special ranges and calculations are available for these gages at minimal extra cost. See bulletins A-30 and F-41 for additional information on Magnehelic and Capsuhelic gages and DS-300 flow sensors.

For additional useful information on making flow calculations, the following reference is recommended: Crane Valve Co. Technical Paper No. 410 "Flow of Fluids Through Valves, Fittings and Pipe." It is available from Crane Valve Co., 104 N. Chicago St., Joliet, IL 60431. Phone 815/727-2600. Price including shipping is $20.00

Using the appropriate differential pressure equation from page 4, calculate the differential pressure generated by the sensor under **normal** operating conditions of the system. Check the chart below to determine if this value is within the recommended operating range for the sensor. Note that the data in this chart is limited to standard conditions of air at 60°F (15.6°C) and 14.7 psia static line pressure or water at 70°F (21.1°C). To determine recommended operating ranges for other gases, liquids and/or operating conditions, consult the factory.

Note the column on the right side of the chart which defines velocity ranges to avoid. Continuous operation within these can result in damage to the flow sensor caused by excess vibration.

Pipe Size (Schedule 40)	Flow Coefficient "K"	Operating Ranges Air @ 60°F & 14.7 psia (D/P Inches W.C.)	Operating Ranges Water @ 70°F (D/P Inches W.C.)	Velocity Ranges Not Recommended (Feet per Second)
1	0.52	1.10 to 186	4.00 to 675	146 to 220
1¼	0.58	1.15 to 157	4.18 to 568	113 to 170
1½	0.58	0.38 to 115	1.36 to 417	96 to 144
2	0.64	0.75 to 75	2.72 to 271	71 to 108
2½	0.62	1.72 to 53	6.22 to 193	56 to 85
3	0.67	0.39 to 35	1.43 to 127	42 to 64
4	0.67	0.28 to 34	1.02 to 123	28 to 43
6	0.71	0.64 to 11	2.31 to 40	15 to 23
8	0.67	0.10 to 10	0.37 to 37	9.5 to 15
10	0.70	0.17 to 22	0.60 to 79	6.4 to 10

DWYER INSTRUMENTS, INC.
P.O. Box 373, Michigan City, Indiana 46361 USA
Phone: 219/879-8000 Fax: 219/872-9057

FLOW EQUATIONS

1. Any Liquid

$$Q\ (GPM) = 5.668 \times K \times D^2 \times \sqrt{\Delta P / S_f}$$

2. Steam or Any Gas

$$Q\ (lb/Hr) = 359.1 \times K \times D^2 \times \sqrt{p \times \Delta P}$$

3. Any Gas

$$Q\ (SCFM) = 128.8 \times K \times D^2 \times \sqrt{\frac{P \times \Delta P}{(T+460) \times S_s}}$$

DIFFERENTIAL PRESSURE EQUATIONS

1. Any Liquid

$$\Delta P\ (in.\ WC) = \frac{Q^2 \times S_f}{K^2 \times D^4 \times 32.14}$$

2. Steam or Any Gas

$$\Delta P\ (in.\ WC) = \frac{Q^2}{K^2 \times D^4 \times p \times 128{,}900}$$

3. Any Gas

$$\Delta P\ (in.\ WC) = \frac{Q^2 \times S_s \times (T+460)}{K^2 \times D^4 \times P \times 16{,}590}$$

TECHNICAL NOTATIONS

The following notations apply:

ΔP = Differential pressure expressed in inches of water column.
Q = Flow expressed in GPM, SCFM or PPH as shown in equation.
K = Flow coefficient — See Values Tabulated on page 3.
D = Inside diameter of line size expressed in inches. For square & rectangular ducts use $D = \sqrt{\frac{4 \times \text{Height} \times \text{Width}}{\pi}}$

P = Static Line pressure (psia)
T = Temperature in degrees Fahrenheit (plus 460=°Rankin)
p = Density of medium in pounds per cubic foot
S_f = Sp Gr at flowing conditions
S_s = Sp Gr at 60°F

SCFM TO ACFM EQUATION

$$SCFM = ACFM \times \left(\frac{14.7 + PSIG}{14.7}\right)\left(\frac{520^*}{460 + °F}\right)$$

$$ACFM = SCFM \times \left(\frac{14.7}{14.7 + PSIG}\right)\left(\frac{460 + °F}{520}\right)$$

$$\text{POUNDS PER CUBIC FOOT STD.} = \text{POUNDS PER CUBIC FOOT ACT.} \times \left(\frac{14.7}{14.7 + PSIG}\right)\left(\frac{460 + °F}{520}\right)$$

$$\text{POUNDS PER CUBIC FOOT ACT.} = \text{POUNDS PER CUBIC FOOT STD.} \times \left(\frac{14.7 + PSIG}{14.7}\right)\left(\frac{520}{460 + °F}\right)$$

1 CUBIC FOOT OF AIR = 0.076 POUNDS PER CUBIC FOOT AT 60°F AND 14.7 PSIA

*(520 = 460 + 60°) Std. Temp. Rankine

©Copyright 1996 Dwyer Instruments, Inc.

Printed in U.S.A. 6/96

FR 72-440451-01

DWYER INSTRUMENTS, INC.
P.O. Box 373 Michigan City, Indiana 46361 U.S.A.
Phone: 219/879-8000 Fax: 219/872-9057

SERIES FM 437 TEMPERATURE CONTROL

INSTALLATION AND OPERATING INSTRUCTIONS

TYPES FM 437, FM 437SS

Series FM 437 Back Angle Immersion Controls are operated by a bimetallic element within an immersed well which is detachable from the instrument, thus making it possible to remove the instrument if necessary at any time after installation without draining the system. The detachable feature also provides greater convenience at time of the control installation.

Two adjustments are provided for setting the operating range at any desired temperature over the operating scale. The operating differential may be set as close as 15° Fahrenheit or may be widened to as much as 120° Fahrenheit.

Basic Types are:

FM 437: Standard well (copper) 200 psi. 300°F.
FM 37SS: Stainless steel well, 900 psi, 300°F.

Adjustments:

FM 437 types have adjustments inside of case.

Variations in contact operation are designated by Type Suffix -2, -3, -26, -36, etc., and, temperature operating range and well dimensions, by Specification Numbers as shown below and included in Type marking.

CONTACT SUFFIX (On Temperature Rise:)

-2, or -36 contact opens
-3, or -26 contact closes
-152 SP-DT 4 wire
-153 SP-DT 3 wire

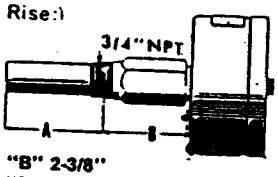

SPECIFICATION NUMBER

3510 Range 80-240°F. Dim "A" 2-7/8" Dim "B" 2-3/8"
3511 Range 80-240°F. Dim "A" 4-1/2" Dim "B" 3/4"
3515 Range 40-200°F. Dim "A" 2-7/8" Dim "B" 2-3/8"
3516 Range 40-200°F. Dim "A" 4-1/2" Dim "B" 3/4"
3528 Range 160-300°F. Dim "A" 2-7/8" Dim "B" 2-3/8"
3529 Range 160-300°F. Dim "A" 4-1/2" Dim "B" 3/4"

ELECTRICAL CAPACITY

Contact Suffix -2 and -3: 10 Amp. 120V, 5 Amp. 240V. AC or DC. 3/4 hp. Single phase 120/240 volts AC, 1/3 hp. 120/240 DC.
Suffix -152, -153, 4 Amp. 120V. AC or DC. 2 Amp. 240V/AC or DC. 1/8 hp. Single phase 120/240V. AC.
Suffix -26, -36 same as -2 and -3. plus 17 Amp. non-inductive, 120V. 240V. 277V. AC.

CHOOSING A LOCATION: A location must be chosen where the well 'Illustration No. 3' will be fully immersed into freely circulating liquid at all times. Locations where air pockets could occur should be avoided and for that reason nipples must not be used. Under no circumstances should the well touch the inner walls of a boiler. Check for clearance before insertion. Standard bulbs are 2-7 8' long and have a 3/4' threaded connection.

DETACHING INSTRUMENT FROM WELL: Remove cover after loosening the two brass screws on the cover face, backing each screw out a little at a time—first one then the other. Next, loosen the hexagon head screw "G" (Illustration No. 1). Note that the locking assembly which fastens the instrument to the immersed well consists of the hexagon head screw "G" inside of the instrument case (Illustrations 1 and 2, and attached to it is the clamp "J" at the back side of the case. After loosening the hexagon screw a couple of turns, it may drop down to the bottom of slot "H" (Illustration No. 1). If it should stick, force it down with the screw driver or pull the clamp "J" at the back of the case down to release the clamp from its locked position. Then carefully pull or gently force instrument directly forward from the gear teeth mesh grip between instrument and well opening.

RECLAMPING INSTRUMENT TO WELL: When inserting the bimetal coil "K" (Illustration No. 2) of the instrument into the well section (Illustration No. 3) (which has been installed) see that the teeth on the two sections mesh in such a way that the control will be horizontally level. Be sure to move the clamp "J" and the hexagon screw "G" up to the top of the slot "H" before tightening the hexagon screw "G".

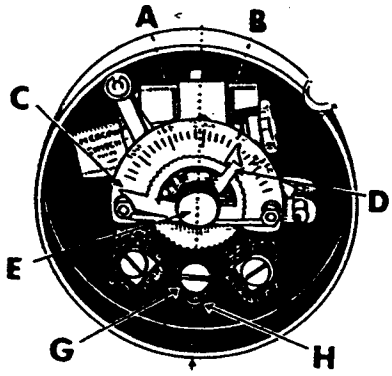

ILLUSTRATION NO. 1

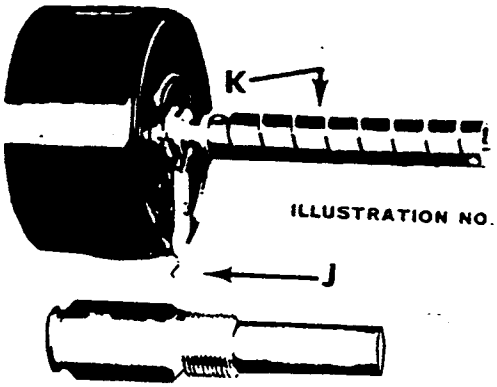

ILLUSTRATION NO. 2

ILLUSTRATION NO. 3

LEVELING: Instrument must be in a perfectly horizontal level position. It may be necessary to turn the well one or two degrees with a wrench if the teeth do not mesh so that the control will be in a level position. When the control is level the mercury tube should fall easily to the right "A" (Illustration No. 1) or to the left "B", when pushed gently with the fingers after first separating the pointers "C" and "D". Pointer "C" is put into position by pushing knob "E" inward and then turning it as far as it will go, to the left. Pointer "D" is put into position by pulling knob "E" outward and at the same time turning it to the right as far as it will go.

WIRING: Scrape and clean the wires and carefully place around the terminal screws and in the groove provided in instrument. Rigid conduit must not be attached directly to the instrument case. Use a short piece of BX between the rigid conduit and the control so that it will not be subjected to conduit expansion and contraction.

Where the control is connected directly into the load circuit, it must be connected into the hot side of the line.

TO SET CONTROLS FOR DESIRED OPERATING RANGE FM models cover must be removed. The various types of the controls described above, have a calibrated dial indicating a temperature range The pointer "C" (Illustration No. 1) to the left, wherever set, determines the "low" temperature side at which the mercury switch comes into action.

The pointer "D" to the right, wherever set, determines the "high" temperature side at which the mercury switch comes into action.

To adjust for the "low" setting, press knob "E" (Illustration No. 1) and at the same time turn it to move the pointer to the desired "low" temperature setting. To adjust for the "high" temperature setting, pull knob "E" and at the same time turn it to move the other pointer to the desired "high" temperature setting, which completes the fixed operating range at which the control will operate.

CAUTION:—Control movement must not be oiled. Do not overload—note electrical rating on name plate and be sure total current passing through switch is within specified rating as noted under caption "Electrical Capacity." Do not tamper with switch wires. Position of these wires is essential to proper operation. Tampering with these wires will void warranty.

MERCOID DIVISION
[illegible] INSTRUMENTS, [illegible]
P.O. Box 258
Michigan City, IN 46360
PHONE 219 [illegible]
FAX 219 872-9057
TELEX [illegible]

Printed in U.S.A. 5/91
FR 96 441705 00

Dwyer

SERIES 1950

INTEGRAL EXPLOSION-PROOF PRESSURE SWITCHES

Specifications - Installation and Operating Instructions

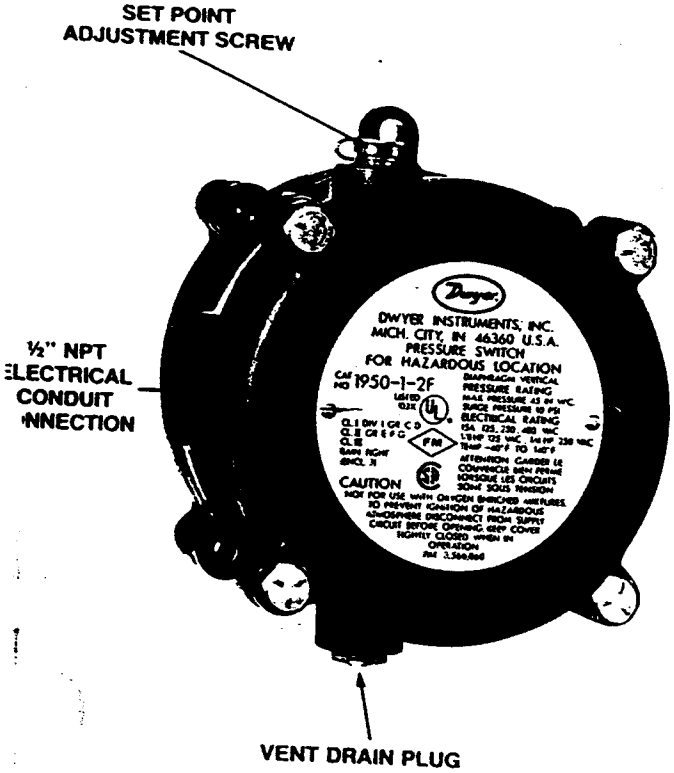

The New Model 1950 Explosion-Proof Switch combines the best features of the popular Dwyer Series 1900 Pressure Switch with a compact explosion-proof housing.

The unit is U.L. and CSA listed, FM approved for use in Class I, Groups C & D, Class II, Groups E, F, & G and Class III atmospheres. It is also totally rain-tight for outdoor installations. Twelve models allow set-points from .03 to 20 inches W.C. and from .5 to 50 PSI.

Easy access to the SPDT switch for electrical hook-up is provided by removing the top plate of the three-part aluminum housing. Adjustment to the set point of the switch can be made without disassembly of the housing. The unit is very compact, about half the weight and bulk of equivalent conventional explosion-proof switches.

CAUTION: For use only with air or compatible gases. Use of the Model 1950 switch with explosive media connected to the **Low** pressure port (including differential pressure applications in such media) is not recommended. Switch contact arcing can cause an explosion inside the switch housing which, while contained, may render the switch inoperative. If switch is being used to sense a single positive pressure relative to atmosphere, run a line from the low pressure port to a non-hazardous area free of combustible gases. This may increase response time on -0 and -00 models.

UL and CSA Listed, FM Approved For
CL. I GR. C,D – CL. II GR. E,F,G – CL. III

Model 1950 Switches: Operating ranges and dead bands.

To order specify Model Number	Operating Range Inches, W.C.	Approximate Dead Band	
		At Min. Set Point	At Max. Set Point
1950-02	0.03 to 0.10	0.025	0.05
1950-00	0.07 to 0.15	0.04	0.05
1950-0	0.15 to 0.5	0.10	0.15
1950-1	0.4 to 1.6	0.15	0.20
1950-5	1.4 to 5.5	0.3	0.4
1950-10	3.0 to 11.0	0.4	0.5
1950-20	4.0 to 20.0	0.4	0.6
Model Number	**Operating Range PSI**	**Approximate Dead Band**	
		Min. Set Point	**Max. Set Point**
1950P-2	.5 to 2.0	0.3 PSI	0.3 PSI
1950P-8	1.5 to 8.0	1.0 PSI	1.0 PSI
1950P-15	3.0 to 15.0	0.9 PSI	0.9 PSI
1950P-25	4.0 to 25.0	0.7 PSI	0.7 PSI
1950P-50	15.0 to 50	1.0 PSI	1.5 PSI

PHYSICAL DATA

Temperature Limits: –40° to 140°F (–40° to 60°C), 1950P-8, 15, 25 & 50: 0° to 140°F (–17.8° to 60°C), 1950-02: –30° to 130°F (–34.4° to 54.4°C).
Rated Pressure: 1950 — 45 IN. W.C., 1950P — 35 PSI, 1950P-50 only — 70 PSI.
Maximum surge pressure: 1950 — 10 PSI, 1950P — 50 PSI, 1950P-50 only — 90 PSI.
Pressure Connections: 1/8" NPT.
Electrical Rating: 15 amps, 125, 250,480 volts, 60 Hz. A.C. Resistive 1/8 H.P. @ 125 volts, 1/4 H.P. @ 250 volts, 60 Hz. A.C.
Wiring connections: 3 screw type; common, norm. open and norm. closed.
Conduit connections: 1/2" NPT.
Set point adjustment: Screw type on top of housing. Field adjustable.
Housing: Anodized cast aluminum.
Diaphragm: Molded fluorosilicone rubber. 02 model, silicone on nylon.
Calibration Spring: Stainless Steel.
Installation: Mount with diaphragm in vertical position.
Weight: 3 1/4 lbs. 02 model, 4 lbs., 7 oz.

Response Time: Because of restrictive effect of flame arrestors, switch response time may be as much as 10-15 seconds where applied pressures are near set point.

NOTE: The last number-letter combination in the 1950 model number identifies the switch electrical rating (number) and diaphragm material (letter). The 2F combination is standard as described in the physical data above. In the case of special models, a number 1 rating is the same as 2; a number 3 or 4 rating is 10A 125, 250, 480 VAC - ⅛ HP 125 VAC, ¼ HP 250 VAC; and a number 5 or 6 rating is 1A 125 VAC. A letter B indicates a Buna-N diaphragm, N; Neoprene, S; Silicone, and V; Viton.

DWYER INSTRUMENTS, INC.
P.O. BOX 373 • MICHIGAN CITY, INDIANA 46360 U.S.A.
Telephone 219/879-8000
Fax 219/872-9057

SERIES 1950
INTEGRAL EXPLOSION-PROOF PRESSURE SWITCHES
Installation and Operating Instructions

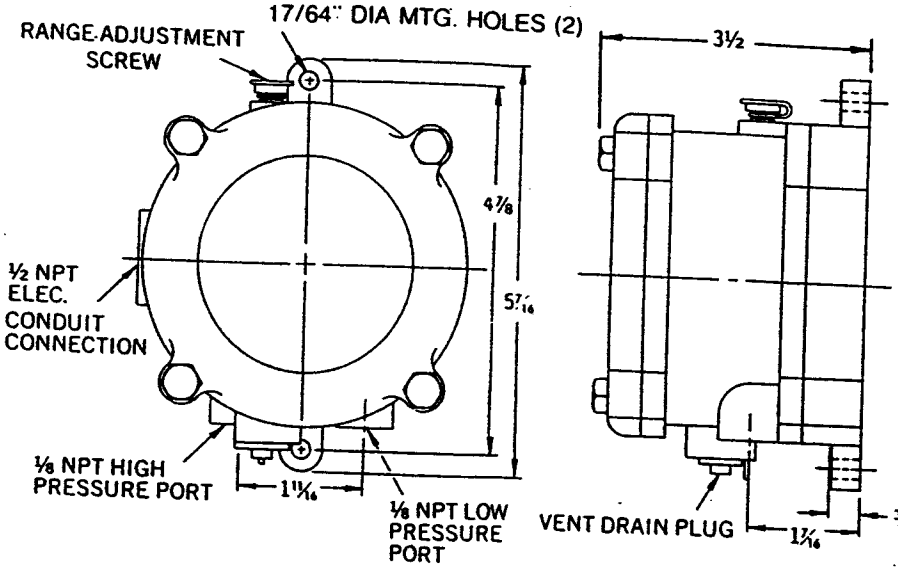

1950-02: 7-3/4" dia. × 4-11/32" depth. For complete dimensions request drawing 28-700175-00 from our Customer Service Department.

1950 SWITCH OUTLINE DIMENSIONS

INSTALLATION

1. Select a location free from excess vibration and corrosive atmospheres where temperatures will be within the limits noted under Physical Data on page 1. Switch may be installed outdoors or in areas where the hazard of explosion exists. See page 1 for specific types of hazardous service.
2. Mount standard switches with the diaphragm in a vertical plane and with switch lettering and Dwyer nameplate in an upright position. Some switches are position sensitive and may not reset properly unless they are mounted with the diaphragm vertical. Special units can be furnished for other than vertical mounting arrangements if required.
3. Connect switch to source of pressure, vacuum or differential pressure. Metal tubing with 1/4" O.D. is recommended, but any tubing which will not restrict the air flow can be used. Connect to the two 1/8" NPT female pressure ports as noted below:
   A. Differential pressures - connect pipes or tubes from source of greater pressure to high pressure port marked HIGH PRESS. and from source of lower pressure to low pressure port marked LOW PRESS.
   B. Pressure only (above atmospheric) - connect tube from source of pressure to high pressure port. The low pressure port is left open to atmosphere. See CAUTION on page 1.
   C. Vacuum only (below atmospheric pressure) - connect tube from source of vacuum to low pressure port. The high pressure port is left open to atmosphere.
4. To make electrical connections, remove the three hex head screws from the cover and after loosening the fourth captive screw, swing the cover aside. Electrical connections to the standard single pole, double throw snap switch are provided by means of screw terminals marked "common," "norm open," and "norm closed." The normally open contacts close and the normally closed contacts open when pressure increases beyond the setpoint. Switch loads for standard models should not exceed the maximum specified current rating of 15 amps resistive. Switch capabilities decrease with an increase in ambient temperature, load inductance, or cycling rate. Whenever an application involves one or more of these factors, the user may find it desirable to limit the switched current to 10 amps or less in the interest of prolonging switch life.

ADJUSTMENT

To change the setpoint:

A. Remove the plastic cap and turn the slotted Adjustment Screw at the top of the housing clockwise to raise the setpoint pressure and counter-clockwise to lower the setpoint. After calibration, replace the plastic cap and re-check the setpoint.

B. The recommended procedure for calibrating or checking calibration is to use a "T" assembly with three rubber tubing leads, all as short as possible and the entire assembly offering minimum flow restriction. Run one lead to the pressure switch, another to a manometer of known accuracy and appropriate range, and apply pressure through the third tube. Make final approach to the setpoint very slowly. Note that manometer and pressure switch will have different response times due to different internal volumes, lengths of tubing, fluid drainage, etc. Be certain the switch is checked in the position it will assume in use, i.e. with diaphragm in a vertical plane and switch lettering and Dwyer nameplate in an upright position.

C. For highly critical applications check the setpoint adjustment and if necessary, reset it as noted in step A.

MAINTENANCE

The moving parts of these switches need no maintenance or lubrication. The only adjustment is that of the setpoint. Care should be taken to keep the switch reasonably clean. Periodically the vent drain plug should be rotated then returned to its original position. This will dislodge deposits which could accumulate in applications where there is excessive condensation within the switch.

©Copyright 1997 Dwyer Instruments, Inc.

Printed in U.S.A. 4/97

FR26-440332-00

DWYER INSTRUMENTS, INC.
P.O. Box 373, Michigan City, Inciana 46360, U.S.A.
Phone: 219/879-8000 Fax: 219/872-9057

FLOTECT™ MODEL L-6 FLOAT SWITCH

Installation and Operating Instructions

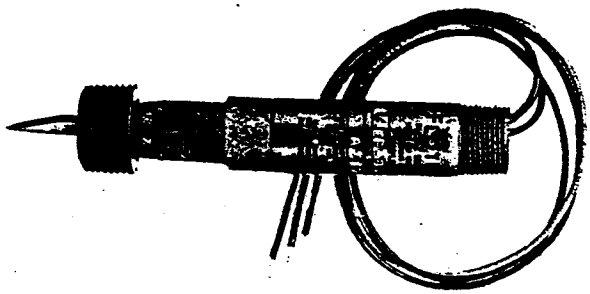

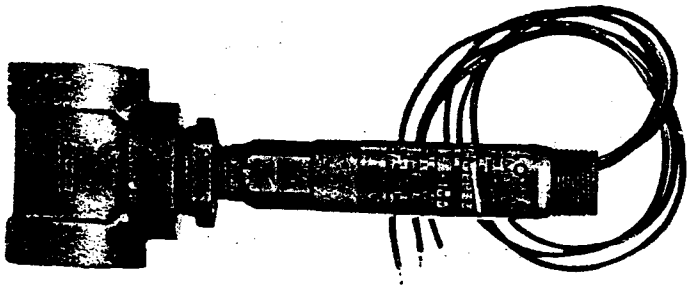

Explosion-Proof; U.L. and C.S.A. Listed -
Class I, Groups *A, B, C & D
Class II, Groups E, F & G
CENELEC: EExd IIC T6 (T amb=75°C)
*(Group A, stainless steel body only)

PHYSICAL DATA

Temperature Limit: 220°F (105°C) maximum
Maximum Pressure: See chart below
Switches: One or two SPDT snap switches
Electrical Rating: U.L.: 5A @ 125/250 VAC.
C.S.A. and CENELEC: 5A @ 125/250 VAC, 5A resistive, 3A inductive @ 30 VDC.
Optional ratings: MV option—Gold contacts for dry circuits. Rated 0.1A @ 125 VAC MT option: 400°F (205°C) 5A @ 125/250 VAC (not listed).
Wiring Connections: 3-18" (460mm) wire leads, 18 ga.
CENELEC models only: push-in type terminal blocks
Black = common, blue = N.O., red = N.C.
Minimum Specific Gravity:
Polypropylene float - 0.9
Round SS float - 0.7
Cylindrical SS float - 0.5
Switch Body: Brass 3/4" NPT conduit connection.
For SS switch body, change model no. to L6EPS.
Piping/Mounting Connection: 1" NPT
Installation: Horizontal, index arrow pointing down.
Weight: 1 lb. (.5 KG); w/external chamber 1-3/4 lb. (.8 KG)

WETTED MATERIALS CHART

Model	Brass	Bronze	Ceramic	Polypropylene	301SS	303SS	304SS
B-S-3-A	X		X		X		X
B-S-3-B	X	X	X	X	X		
B-S-3-C	X		X		X		X
B-S-3-H	X	X	X		X		X
B-S-3-O	X		X	X	X		
S-S-3-A			X	X	X		X
S-S-3-C			X		X	X	X
S-S-3-L			X		X	X	X
S-S-3-O			X	X	X	X	
S-S-3-S			X	X	X	X	

MAXIMUM PRESSURE CHART

Model Number	Float	Pressure Rating PSIG (KG/CM²)
L6EPB-B-S-3-A	Cylindrical SS	200 (14)
L6EPB-B-S-3-B	Polypropylene	250 (18)
L6EPB-B-S-3-C	Round SS	350 (25)
L6EPB-B-S-3-H	Round SS	250 (18)
L6EPB-B-S-3-O	Polypropylene	1000 (70)
L6EPB-S-S-3-A	Cylindrical SS	200 (14)
L6EPB-S-S-3-C	Round SS	350 (25)
L6EPB-S-S-3-L	Round SS	350 (25)
L6EPB-S-S-3-O	Polypropylene	2000 (140)
L6EPB-S-S-3-S	Polypropylene	2000 (140)

INSTALLATION:

Unpack switch and remove any packing material found inside lower housing or float chamber.

Switch must be installed with body in a horizontal plane and arrow on side pointing down.

If switch has an external float chamber (tee), connect it to vertical sections of 1" NPT pipe installed outside vessel walls at appropriate levels. If unit has no external float chamber, it must be mounted in a 1" NPT half coupling welded to the vessel wall. The coupling must extend through the wall.

Inspect and clean wetted parts at regular intervals.

ELECTRICAL CONNECTIONS:

Connect wire leads in accordance with local electrical codes and switch tion required. N.O. contacts will close and N.C. contacts will open when uid level causes float to rise. They will return to "normal" condition .ı decreasing liquid level. Black = common, Blue = N.O. and Red = N.C.

For units supplied with both internal and external grounds, the ground screw inside the housing must be used to ground the control. The external ground screw is for supplementary bonding when allowed or required by local code. Some CSA listed models are furnished with a separate green ground wire. Such units must be equipped with a junction box, not supplied but available on special order.

CENELEC certified models include a junction box. Cable should enter enclosure through an approved EX cable gland, not supplied. Push stripped and tinned leads into appropriate openings in terminal block(s). To connect fine stranded leads or to remove any wire, depress spring release with small screwdriver first.

All wiring, conduit and enclosures must meet applicable codes for hazardous areas. Conduits and enclosures must be properly sealed. For outdoor or other locations where temperatures vary widely, precautions should be taken to prevent condensation inside switch or enclosure. Electrical components must be kept dry at all times. **CAUTION:** To prevent ignition of hazardous atmospheres, disconnect the device from the supply circuit before opening. Keep assembly tightly closed when in use.

Dimensions on reverse

FLOTECT™ MODEL L-6 FLOAT SWITCH — DIMENSION DRAWINGS

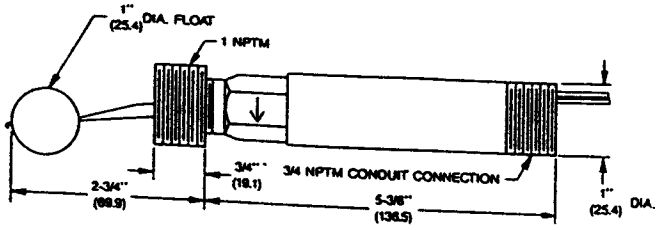

Polypropylene Float

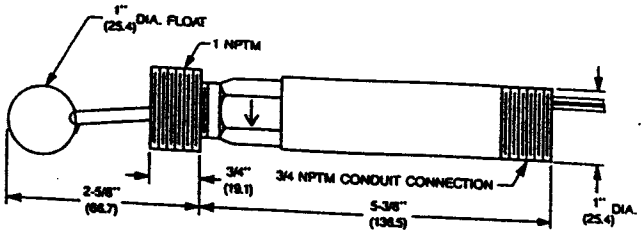

Round Stainless Steel Float

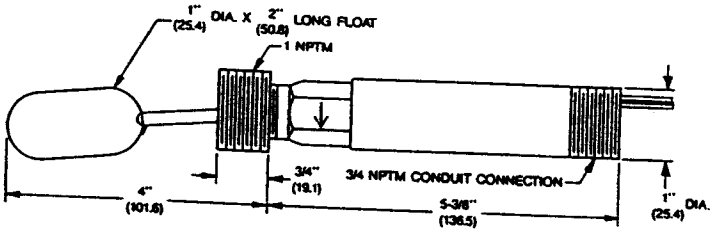

Cylindrical Stainless Steel Float

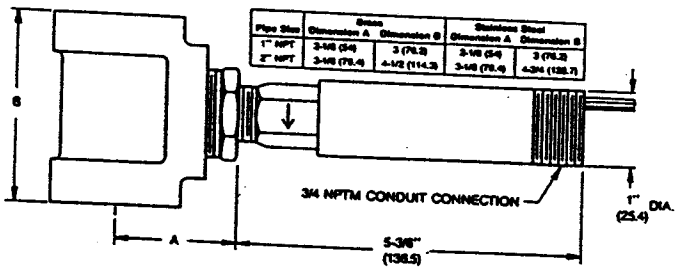

With External Float Chamber (Tee)

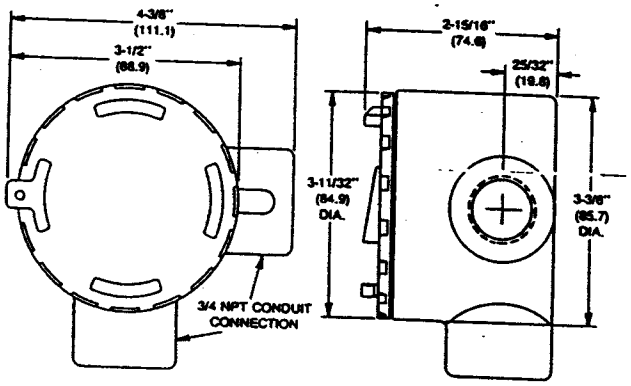

CSA, CENELEC Conduit Enclosure

Limited Warranty: The Seller warrants all Dwyer instruments and equipment to be free from defects in workmanship or material under normal use and service for a period of one year from date of shipment. Liability under this warranty is limited to repair or replacement F.O.B. factory of any parts which prove to be defective within that time or repayment of the purchase price at the Seller's opinion provided the instruments have been returned, transportation prepaid, within one year from the date of purchase. All technical advice, recommendations and services are based on technical data and information which the Seller believes to be reliable and are intended for use by persons having skill and knowledge of the business, at their own discretion. In no case is Seller liable beyond replacement of equipment F.O.B. factory or the full purchase price. This warranty does not apply if the maximum ratings label is removed or if the instrument or equipment is abused, altered, used at ratings above the maximum specified, or otherwise misused in any way.

THE EXPRESS LIMITED WARRANTY IS IN LIEU OF AND EXCLUDES ALL OTHER REPRESENTATIONS MADE BY ADVERTISEMENTS OR BY AGENTS AND ALL OTHER WARRANTIES, BOTH EXPRESS AND IMPLIED. THERE ARE NO IMPLIED WARRANTIES OF MERCHANTABILITY OR OF FITNESS FOR A PARTICULAR PURPOSE FOR GOODS COVERED HEREUNDER.

Buyers Remedies: THE BUYER'S EXCLUSIVE AND SOLE REMEDY ON ACCOUNT OF OR IN RESPECT TO THE FURNISHING OF NONCONFORMING OR DEFECTIVE MATERIAL SHALL BE TO SECURE REPLACEMENT THEREOF AS AFORESAID. THE SELLER SHALL NOT IN ANY EVENT BE LIABLE FOR THE COST OF ANY LABOR EXPENDED ON ANY SUCH MATERIAL OR FOR ANY SPECIAL, DIRECT, INDIRECT OR CONSEQUENTIAL DAMAGES TO ANYONE BY REASON OF THE FACT THAT IT SHALL HAVE BEEN NON-CONFORMING OR DEFECTIVE.

Dwyer Instruments, Inc.
P.O. Box 373
Michigan City, IN 46360

BULLETIN E-81-MLK

Model F7-MLK Multi-Level Switch Kit

Specifications - Installation and Operating Instructions

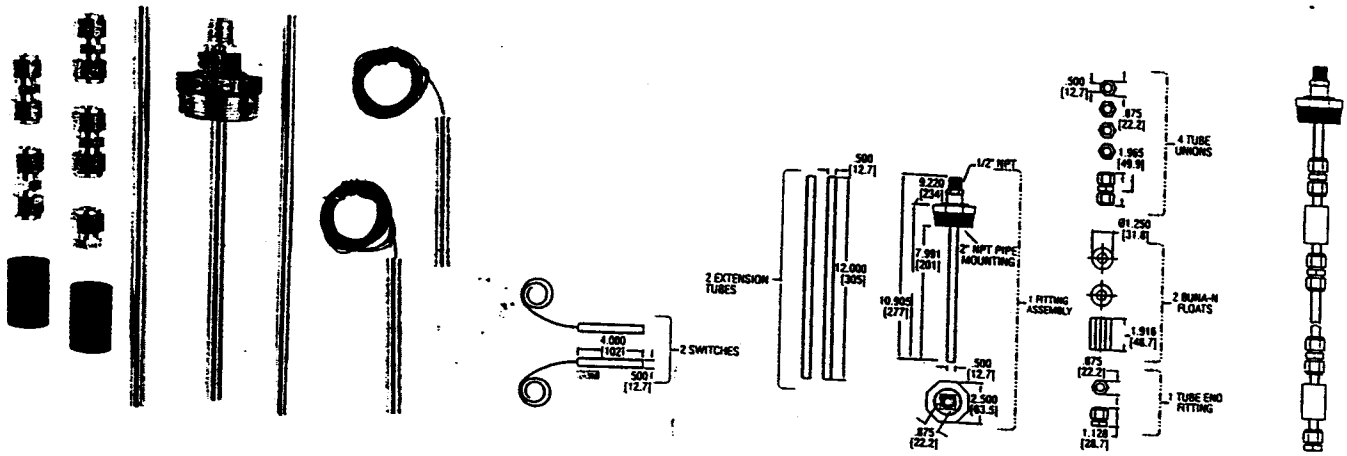

GENERAL

The F7-MLK Multi-Level Switch Kit contains all the components necessary for the design and fabrication of a 1 or 2 station level switch for pipe plug mounting. User can customize stem length (max 36"), actuation point, distance between floats, and lead wire lengths. The switch kit is ideal for general purpose, low specific gravity, and gas and oil applications. Model F7-MLK includes two level stations with Buna-N floats (switch, tube, and float), two brass extension tubes 12" length, four brass tube unions, one end fitting, and one mounting plug.

ASSEMBLY

1. Lay out the components required for the desired configuration of one or two level stations. A typical configuration is shown in figure 1.

2. Cut the tubes to the desired legnth. DO NOT CUT THE SWITCH CAPSULES (short tubes with wires).

3. Clean and smooth all sharp edges on the ends of the cut tubes to avoid damaging the wires.

4. Make a trial assembly of the switch, including the floats, to determine taht the assembly is correct for the application. Be sure the tube and switch capsules are inserted fully into the shoulder of the fittings. Pass the lower switch capsule wire through the upper capsule feedthrough tube. DO NOT TIGHTEN THE UNIONS AND THE END CAP UNTIL YOU ARE SURE THE SWITCH IS CORRECT!.

5. To set switch operation for Buna-N floats:
   NC-(dry position - open on fluid rise) three magnet holes on float should face pipe plug.
   NO-reverse float

To set operation for stainless steel floats:
   NC-(dry position - open on fluid rise) round witness mark in float should be away from pipe plug.
   NO-reverse float

PHYSICAL DATA

Electrical Rating: 60 Watts: 0.4A @ 220VAC, 0.5A @ 110VAC, 0.2A @ 120VDC, 0.5A @ 24VDC.
Maximum Temperature: 221°F (105°C).
Maximum Pressure: 150 psig (10 bar).
Material (Float/Stem): Buna-N/Brass.
Minimum Specific Gravity: 0.45.
Tube/Fitting Size: ½" O.D.
Stem Length: 36" (91cm) maximum.
Mounting Connection: 2" NPT(M) pipe plug.
Mounting: Up to 30° angle from vertical.
Wire Leads: 22 AWG × 72" (183 cm).
Weight: 3.5 lbs (1.6 kg).

6. Test electrical operation with a continuity meter..

7. When the switch is completely set up as desired, tighten all fittings 1-3/4 turns beyond finger tight using two wrenches.

8. Use proper thread sealant on the pipe threads when installing the switch in the tank.

WARNINGS

DO NOT CUT OR MODIFY THE SWITCH CAPSULES (SHORT TUBE WITH WIRES) IN ANY WAY, EXCEPT TO CUT THE WIRES TO LENGTH AFTER ASSEMBLY IS COMPLETE.

DO NOT EXCEED PRESSURE AND TEMPERATURE RATINGS.

DO NOT EXCEED CURRENT AND VOLTAGE READINGS.

BE SURE ALL FITTINGS ARE ASSEMBLED AND TIGHTENED CORRECTLY

DWYER INSTRUMENTS, INC.
P.O. BOX 373 • MICHIGAN CITY, INDIANA 46361 U.S.A.
Phone: 219/879-8000 www.dwyer-inst.com
Fax: 219/982-9057 e-mail: info@dwyer-inst.com

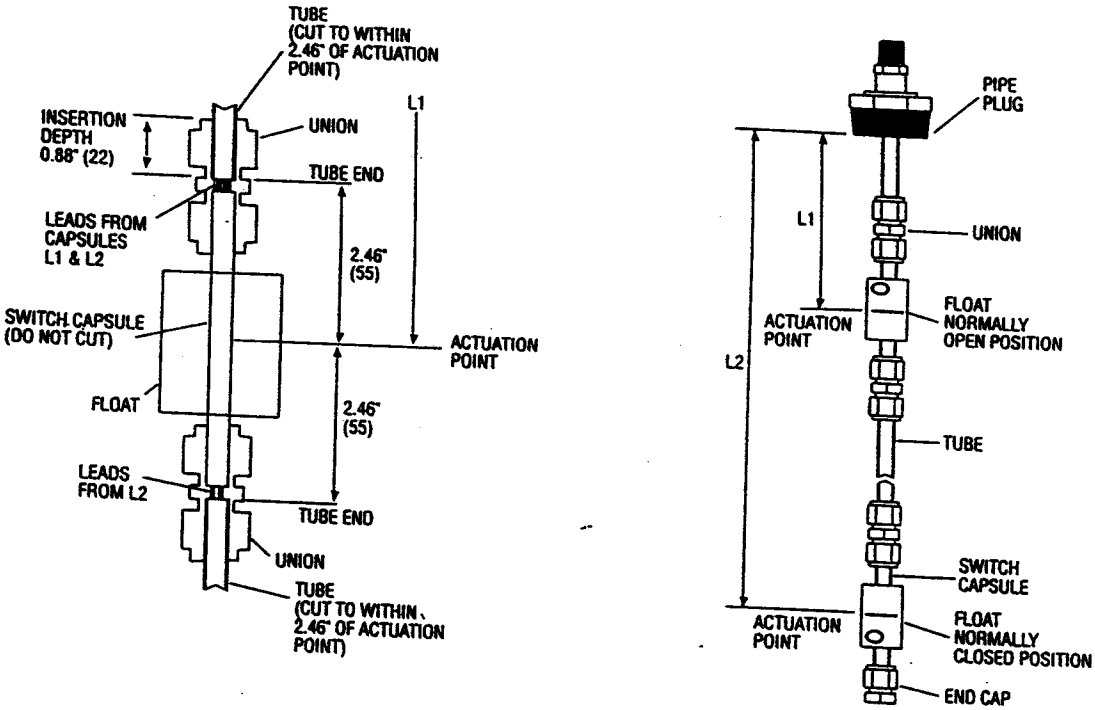

Typical Switch Configuration

Current and Voltage Ratings: These ratings are for resistive loads only. For inductive loads, maximum life will be achieved if appropriate arc suppression is used.

Maximum Voltage ratings: SPST Switches-220VAC.

Watts	Voltage	Current Amps. (Resistive)
60	220AC	0.4
	110AC	0.5
	120DC	0.2
	24DC	0.5

©Copyright 1998 Dwyer Instruments, Inc.

Printed in U.S.A. 3/98

FR R1-443039-00

DWYER INSTRUMENTS, INC.
P.O. BOX 373 • MICHIGAN CITY, INDIANA 46361 U.S.A.
Phone: 219/879-8000
Fax: 219/982-9057
Lit-by-Fax: 888/891-4962
www.dwyer-inst.com
e-mail: info@dwyer-inst.com

RELIEF VALVES (continued) . . .

TYPE VS (FLANGED)

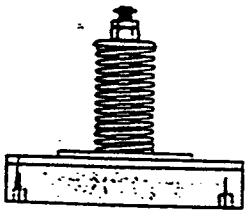

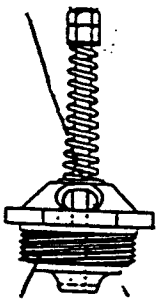

TYPE VS (THREADED)

SPRING - TYPE VS (VACUUM)

VALVE SIZE	RATING - CFM AT 68°F & SET VACUUM									
	SET VACUUM - IN. HG. (1)									
	2	4	6	8	10	12	14	16	18	20
~~1½~~	~~7.5~~	~~15.5~~	~~24~~	~~33~~	~~42~~	~~51~~	~~60~~	~~70~~	—	—
~~2½~~	15.0	31.0	48	66	84	102	120	140	—	—
4	250.0	400.0	550	650	750	825	950	1100	—	—
6	550.0	925.0	1225	1500	1650	1875	2125	2500	2875	3500
8	1000.0	1650.0	2200	2680	3000	3250	3750	4380	5130	6250
10	1550.0	2750.0	3500	4130	4500	5250	6000	6750	8000	9500

(1) Tabulated volumes are based on 25% vacuum accumulation.

KUNKLE VALVES

Fig. 80-4 Spring type relief valves have bronze construction with flat seat and wing guided disc. For pressures up to 30 PSIG and 24" Hg.

Fig. 337 and Fig. 215V Spring type relief valves have cast iron and bronze trim. Disc is bronze with reversible seal level (not furnished on Fig. 215-V). Fig. 337 for pressures to 30 PSIG. Fig. 215-V for vacuum to 24" Hg.

FIG. 337

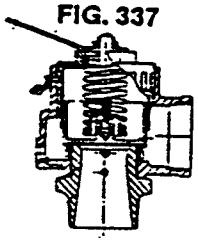

FIG. 80-4

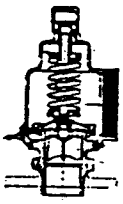

FIG. 215V

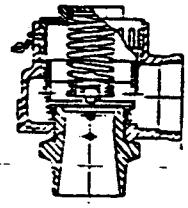

PRESSURE

VALVE FIG. NO.	SIZE	RATING - CFM @ 68°F & 14.7 PSIA									
		SET PRESSURE - PSIG (1)									
		2	4	6	8	10	12	15	20	25	30
80-4	¾		43	45	58	63	67	73	83	92	100
80-4	1	55	76	91	103	111	120	130	148	164	178
80-4	1½	87	119	143	161	175	188	205	231	258	280
80-4	1½	124	171	205	232	251	270	298	332	367	401
80-4	2	222	305	364	411	448	481	544	591	629	715
337	2	327	451	539	607	662	710	773	874	930	1056
337	2½	496	683	816	920	1003	1076	1171	1324	1465	1600
337	3	719	990	1183	1333	1454	1559	1698	1918	2043	2319

(1) Tabulated volumes are based on 10% pressure accumulation.

VACUUM

FIGURE NO.	VALVE SIZE	RATING - CFM AT 68°F & SET VACUUM											
		SET VACUUM - IN. HG. (1)											
		2	4	6	8	10	12	14	16	18	20	22	24
80-4	½	9	13	16	20	23	26	29	34	39	47	59	79
80-4	¾	19	28	36	44	51	58	65	75	87	105	131	175
80-4	1	33	49	62	74	87	99	112	128	149	179	224	298
80-4	1¼	54	81	103	123	142	163	814	210	245	294	368	490
80-4	1½	86	125	156	188	218	247	279	319	373	447	559	745
80-4	2	123	202	256	307	354	403	458	523	610	732	915	1220
80-4	2½	220	323	403	488	566	647	731	836	975	1170	1463	1950
215V	2	233	345	440	533	620	707	799	913	1065	1278	1596	2130
215V	2½	353	523	666	807	938	1070	1211	1384	1615	1938	2423	3230
215V	3	511	758	965	1170	1359	1550	1753	2004	2338	2805	3506	4675

(1) Tabulated volumes are based on 10% vacuum accumulation.

SELECTION

1. Determine inlet volume of blower—ICFM
2. Select valve size whose rating at set pressure desired is not less than inlet volume of blower.

Series F-65

INLINE AIR FILTERS F65

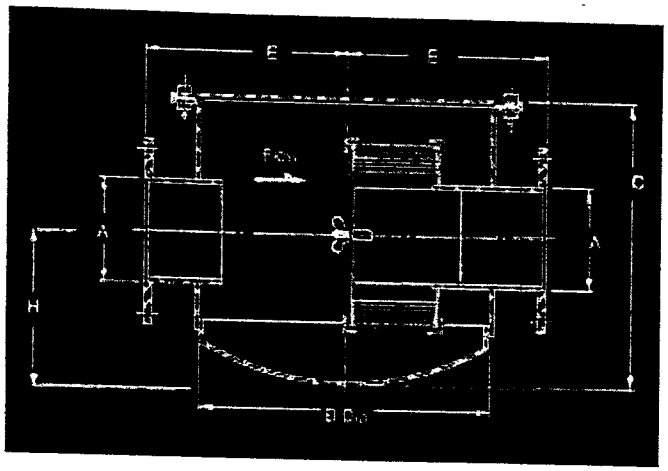

Inline Air Filters

The Series F65 Inline Filter is designed to mount directly in the air piping system for engines, blowers or compressors. The filter element which is fabricated from a pleated paper media, has an efficiency of 98% on 10 micron particles and larger. The Housing is designed to withstand a full vacuum or 5 PSIG. Pressure drop is approximately 2 inches of water at rated flow.

Model	A	B	C	E	H	RATED CFM	WEIGHT	REPLACEMENT ELEMENT NUMBER
F65-2	2 NPT	12	10 3/4	8	5	135	33	F8-108
F65-2 1/2	2 1/2 NPT	12	10 3/4	8	5	180	33	F8-108
F65-3	3 NPT	16	15 1/4	11	7	285	54	F8-109
F65 - 4	* 4 FLG	16	15 1/4	11	7	520	62	F8-109
F65 - 5	* 5 FLG	16	15 1/4	11	7	750	65	F8-109
F65 - 6	* 6 FLG	18	18 5/8	12	10	1075	80	F8-110
F65 - 8	* 8 FLG	24	19 3/8	15	10	1800	155	F8-111
F65 - 10	10 FLG	36	36 1/4	22	17	3335	385	F8-137
F65 - 12	12 FLG	36	36 1/4	22	17	4675	405	F8-137
F65 - 14	14 FLG	36	36 1/4	22	17	5655	425	F8-137

*** Flanges match 125# ASA. Diameter and Drilling.**

Back

Back to page SERIES F65

Series F-65

INLINE AIR FILTERS F65

Pressure Drop vs Air Flow in CFM

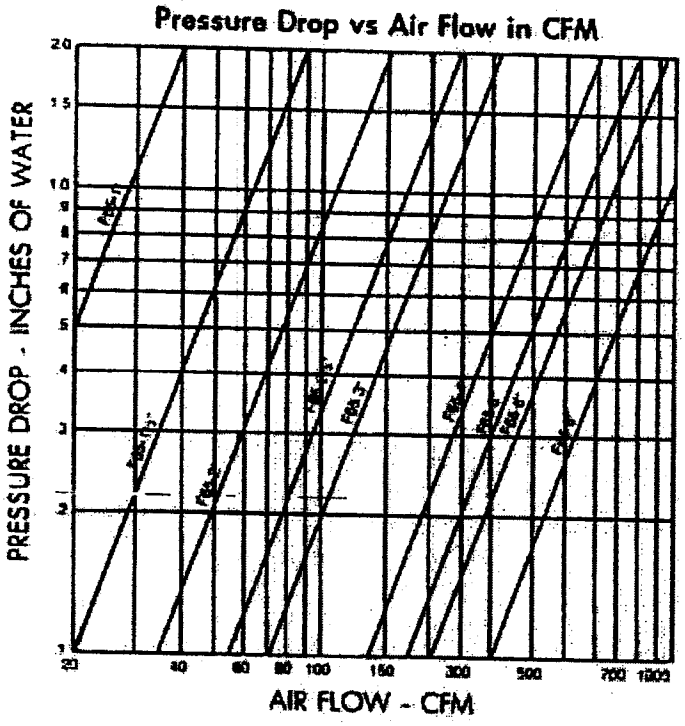

Back

Back to page SERIES F65

Series D

CHAMBER SILENCERS D13H

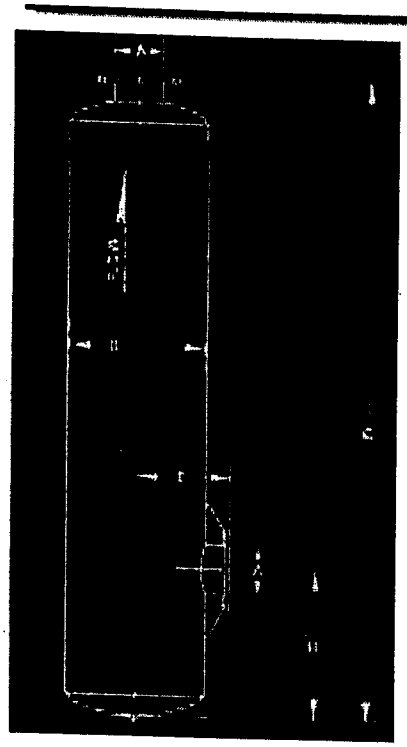

Application

Blower Discharge Silencer for maximum silencing at blower speeds below transition speed.

Design

A multi-chambered silencer containing a special arrangement of volumes and air passageways to effectively reduce pulsations through the conversion of noise energy into heat. D13H may be installed horizontally or vertically. Design parameter permit nozzle orientation to suit installation requirements.

Construction

All welded steel sheet and plate construction for long service life. Exterior surfaces are prime coated. Flanges are drilled to match 125 lb. American Standard Flanges. Inspection opening, mounting brackets, relief valve nozzles or special paint available at extra charge.

Model	A	B	C	E	H		Wt.
					Min.	Max.	
D13H - 2	2*	8	30	7	6	10	25
D13H - 2 1/2	2 1/2*	10	31	8	6	10	36
D13H - 3	3*	10	49	8	6	10	45
D13H - 4	4**	14	49	11	7	24	125
D13H - 5	5**	16	62	12	8	28	145
D13H - 6	6	18	68	13	9	34	175
D13H - 8	8	22	89	15	10	43	465
D13H - 10	10	26	114	17	12	57	748
D13H - 12	12	30	127	19	13	69	1158
D13H - 14	14	36	159	22	15	69	1737
D13H - 16	16	42	173	25	17	81	2353
D13H - 18	18	48	180	28	19	90	3022
D13H - 20	20	48	192	28	20	92	3582
D13H - 22	22	54	205	31	22	96	4815
D13H - 24	24	54	223	31	24	100	5963

*** NPT Connections**
**** Available in both NPT or Flange Connections**

TYPICAL ATTENUATION CURVE

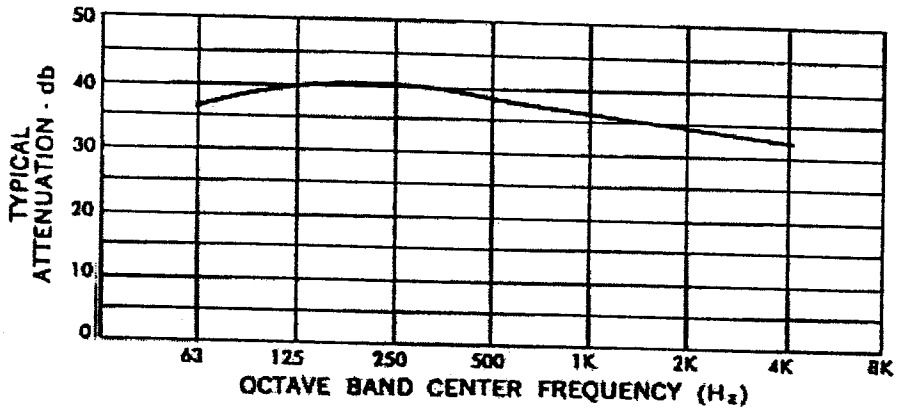

[redacted]

Back to page SERIES D

Series F-64

AIR INTAKE FILTERS and FILTER SILENCERS F64

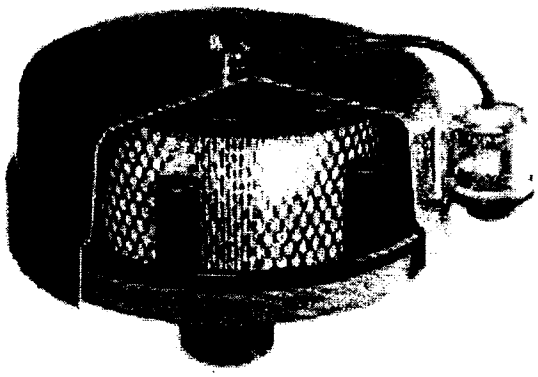

F64 shown with optional A40-108 Pressure Drop Indicator.

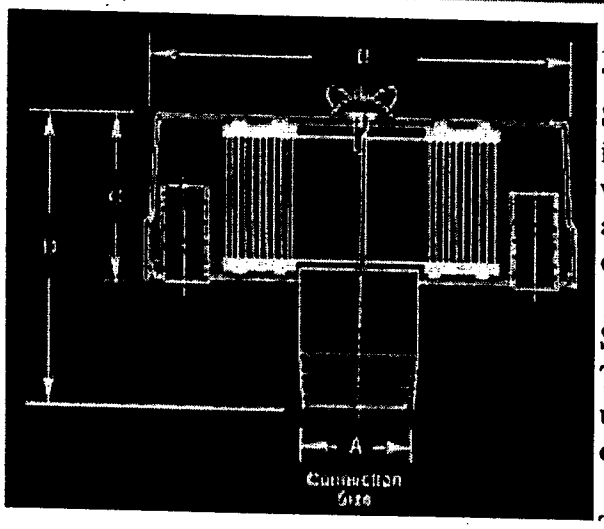

Air Intake Filter and Filter Silencer

The Series F64 Air Intake Filter and Filter Silencer is designed to mount directly on the inlet of an engine, blower or compressor. It will provide 16dB to 20dB noise reduction and the paper filter media has an efficiency of 99% on 1 micron particles.

Service Life & Cleaning

The service life of the element is dependent upon the surrounding environment and cannot be predicted.

To prevent COLLAPSING of the filter element, STODDARD SILENCERS recommends the differential pressure across the filter element NOT exceed 15 inches of water column. Positive indication that the element requires cleaning or replacement can be provided with STODDARD SILENCERS model A40-108 Pressure Drop Indicator, at an extra charge.

To extend service life, rap element gently to dislodge accumulated dirt. An alternate method is to direct compressed air (75 PSIG max) through the element opposite to the direction of air flow. THE FILTER ELEMENT MUST EVENTUALLY BE REPLACED.

ALTERNATE FILTRATION MEDIA AVAILABLE FOR F64

Cleanable Polyester Felt - 99% on 3 micron particles
Galvanized Wire Mesh - 90% on 10 micron particles
(when oil wetted)

Model	A Connection Size	B	C	D	Rated CFM	Wt.	Replacement Element Number
F64 - 1	1" NPT	10	4	7	35	9	F8-108
F64 - 1 1/2	1 1/2" NPT	10	4	7	80	9	F8-108
F64 - 2	2" NPT	10	4	7	135	10	F8-108
F64 - 2 1/2	2 1/2" NPT	10	4	7	180	10	F8-108
F64 - 3	3" NPT	16	5	8	285	20	F8-109
F64 - 4	4" NPT	16	5	8	520	20	F8-109
F64 - 5	5" NPT/FLG	16	5	8	750	23	F8-109
F64 - 6	6" Flange	20	5	8	1075	40	F8-110
F64 - 8	8" Flange	20	10	13	1800	50	F8-111
F64 - 10	10" Flange	26	15 1/2	20	3335	95	F8-137
F64 - 12	12" Flange	26	15 1/2	20	4675	100	F8-137
F64 - 14	14" Flange	26	15 1/2	20	5655	115	F8-137

Sizes 10", 12" and 14" are FILTERS only

TYPICAL ATTENUATION CURVE

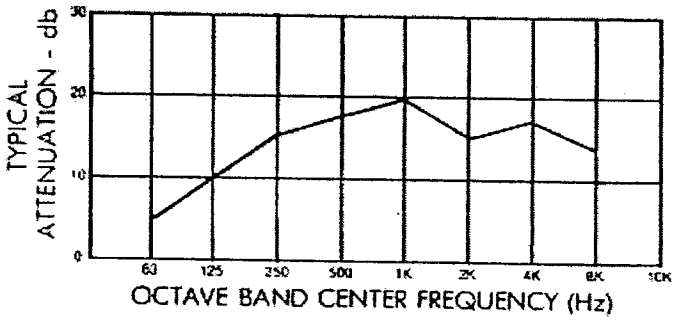

Series D

CHAMBER SILENCERS D13H

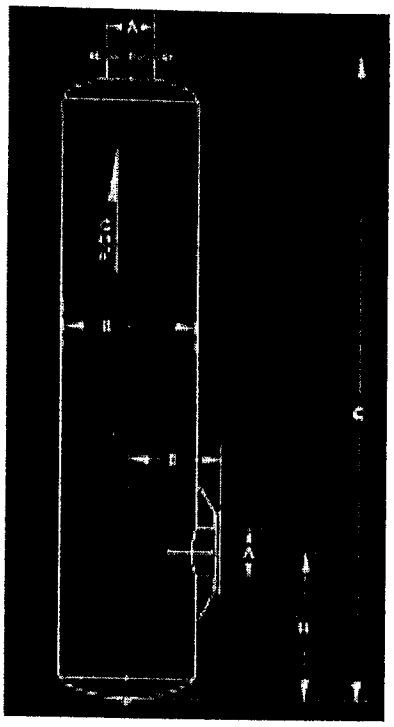

Application

Blower Discharge Silencer for maximum silencing at blower speeds below transition speed.

Design

A multi-chambered silencer containing a special arrangement of volumes and air passageways to effectively reduce pulsations through the conversion of noise energy into heat. D13H may be installed horizontally or vertically. Design parameter permit nozzle orientation to suit installation requirements.

Construction

All welded steel sheet and plate construction for long service life. Exterior surfaces are prime coated. Flanges are drilled to match 125 lb. American Standard Flanges. Inspection opening, mounting brackets, relief valve nozzles or special paint available at extra charge.

Model	A	B	C	E	H		Wt.
					Min.	Max.	
D13H - 2	2*	8	30	7	6	10	25
D13H - 2 1/2	2 1/2*	10	31	8	6	10	36
→ D13H - 3	3*	10	49	8	6	10	45
D13H - 4	4**	14	49	11	7	24	125
D13H - 5	5**	16	62	12	8	28	145
D13H - 6	6	18	68	13	9	34	175
D13H - 8	8	22	89	15	10	43	465
D13H - 10	10	26	114	17	12	57	748
D13H - 12	12	30	127	19	13	69	1158
D13H - 14	14	36	159	22	15	69	1737
D13H - 16	16	42	173	25	17	81	2353
D13H - 18	18	48	180	28	19	90	3022
D13H - 20	20	48	192	28	20	92	3582
D13H - 22	22	54	205	31	22	96	4815
D13H - 24	24	54	223	31	24	100	5963

*** NPT Connections**
**** Available in both NPT or Flange Connections**

TYPICAL ATTENUATION CURVE

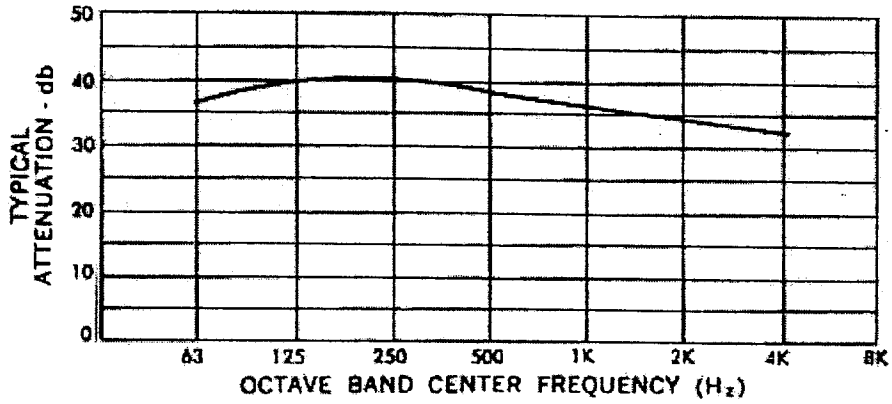

Back

Back to page SERIES D

Series F-64

AIR INTAKE FILTERS and FILTER SILENCERS F64

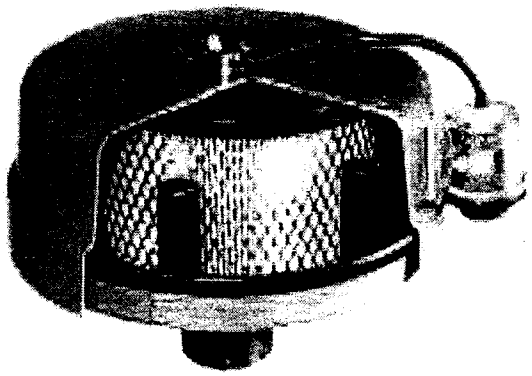

F64 shown with optional A40-108 Pressure Drop Indicator.

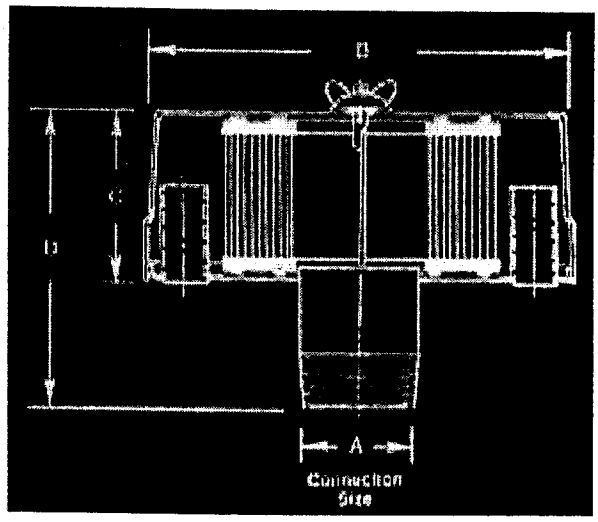

Air Intake Filter and Filter Silencer

The Series F64 Air Intake Filter and Filter Silencer is designed to mount directly on the inlet of an engine, blower or compressor. It will provide 16dB to 20dB noise reduction and the paper filter media has an efficiency of 99% on 1 micron particles.

Service Life & Cleaning

The service life of the element is dependent upon the surrounding environment and cannot be predicted.

To prevent COLLAPSING of the filter element, STODDARD SILENCERS recommends the differential pressure across the filter element NOT exceed 15 inches of water column. Positive indication that the element requires cleaning or replacement can be provided with STODDARD SILENCERS model A40-108 Pressure Drop Indicator, at an extra charge.

To extend service life, rap element gently to dislodge accumulated dirt. An alternate method is to direct compressed air (75 PSIG max) through the element opposite to the direction of air flow. THE FILTER ELEMENT MUST EVENTUALLY BE REPLACED.

ALTERNATE FILTRATION MEDIA AVAILABLE FOR F64

Cleanable Polyester Felt - 99% on 3 micron particles
Galvanized Wire Mesh - 90% on 10 micron particles
(when oil wetted)

Model	A Connection Size	B	C	D	Rated CFM	Wt.	Replacement Element Number
F64 - 1	1" NPT	10	4	7	35	9	F8-108
F64 - 1 1/2	1 1/2" NPT	10	4	7	80	9	F8-108
F64 - 2	2" NPT	10	4	7	135	10	F8-108
F64 - 2 1/2	2 1/2" NPT	10	4	7	180	10	F8-108
F64 - 3	3" NPT	16	5	8	285	20	F8-109
F64 - 4	4" NPT	16	5	8	520	20	F8-109
F64 - 5	5" NPT/FLG	16	5	8	750	23	F8-109
F64 - 6	6" Flange	20	5	8	1075	40	F8-110
F64 - 8	8" Flange	20	10	13	1800	50	F8-111
F64 - 10	10" Flange	26	15 1/2	20	3335	95	F8-137
F64 - 12	12" Flange	26	15 1/2	20	4675	100	F8-137
F64 - 14	14" Flange	26	15 1/2	20	5655	115	F8-137

Sizes 10", 12" and 14" are FILTERS only

TYPICAL ATTENUATION CURVE

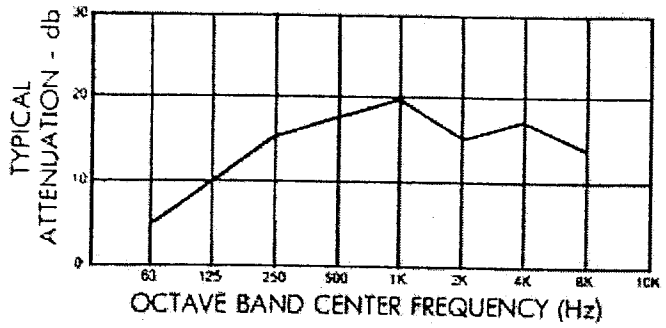

burks pumps.

SERIES G6-1½ thru 4G9-4F

SECTION	2B
PAGE	5
ISSUED	10/94
REPLACES	3/94

MODEL
X3104 G6-2 1/2

CLOSE COUPLED CENTRIFUGAL PUMPS

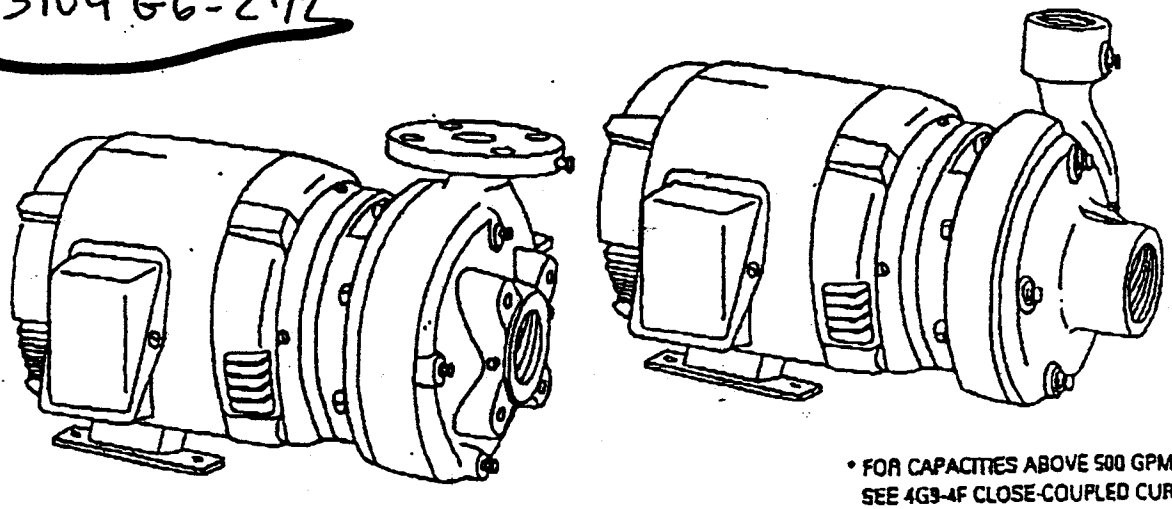

* FOR CAPACITIES ABOVE 500 GPM SEE 4G9-4F CLOSE-COUPLED CURVE.

1750 RPM
CAPACITIES TO 1100 GPM
HEADS TO 95 FEET

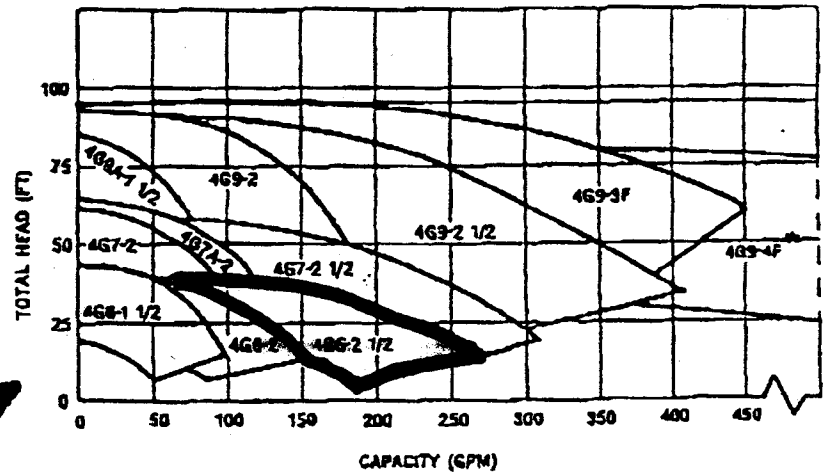

1 HP
XP

3500 RPM
CAPACITIES TO 960 GPM
HEADS TO 380 FEET

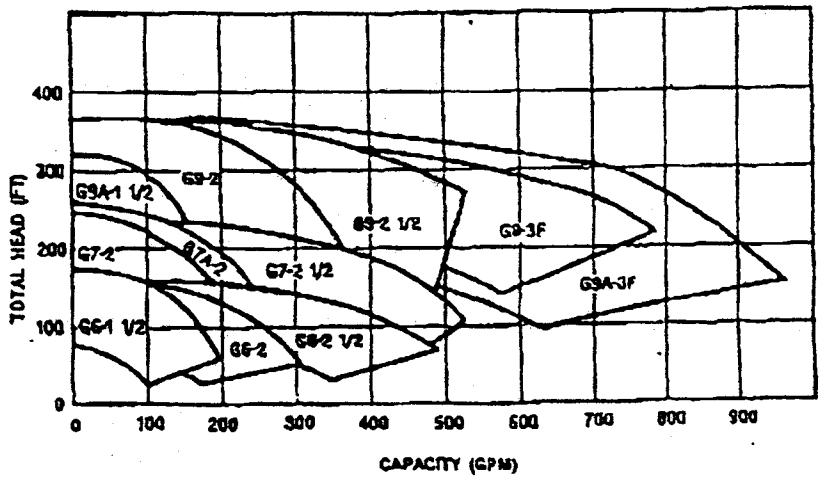

*Individual performance curves should be checked for final selection.

NPSH REQUIRED (FT)

CRANE PUMPS & SYSTEMS

burks pumps.

PERFORMANCE CURVES

SECTION	2B
PAGE	11
ISSUED	2/94
REPLACES	ALL

END SUCTION CENTRIFUGAL PUMPS

2A
3
1/95
ALL

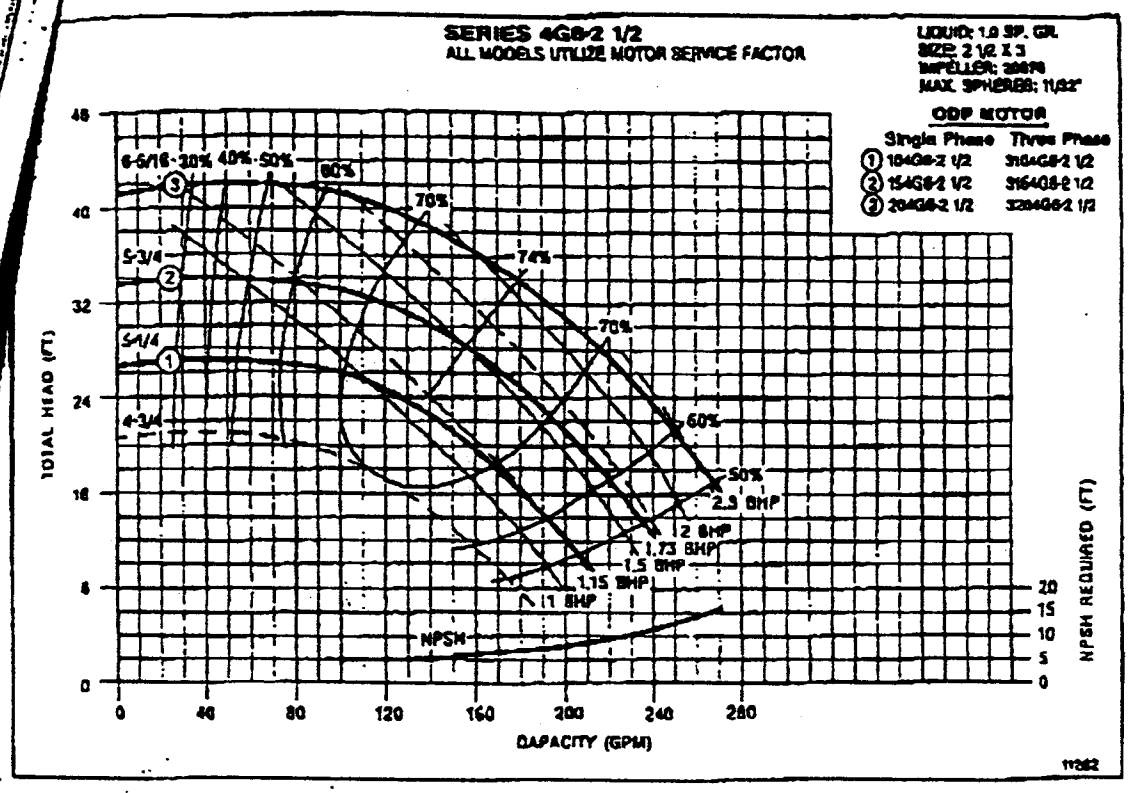

1750 RPM

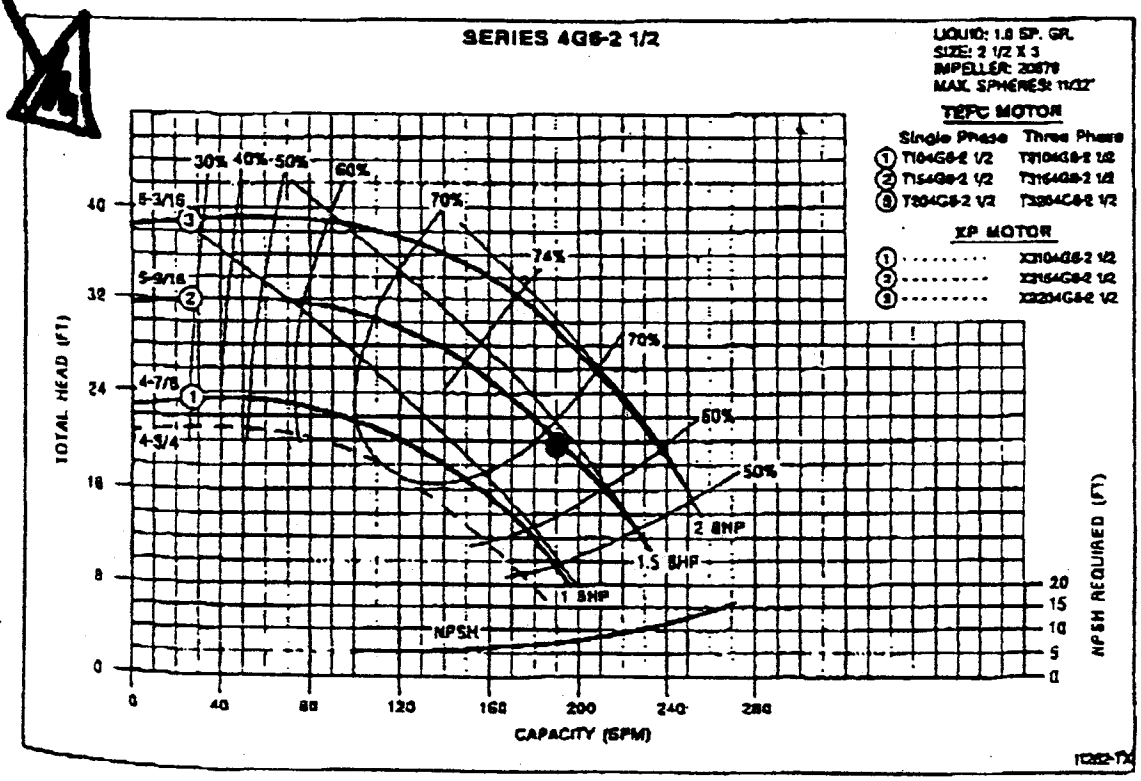

1750 RPM

TOTAL P.03

SECTION	28
PAGE	6
ISSUED	3/94
REPLACES	ALL

burks p
P.O. Box 601 Piqua, Oh 45356
(513) 773-2142 Fax: (513) 773-2

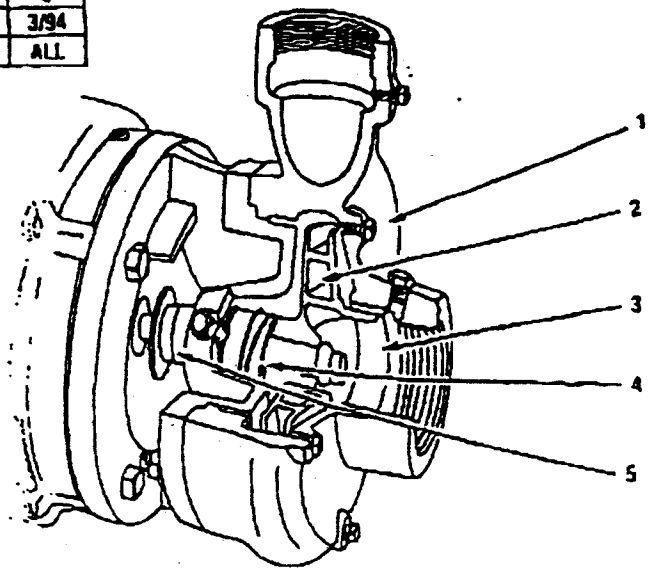

PRODUCT FEATURES

1. RADIAL SPLIT CASING DESIGN

Casing is close grain iron of 30,000 p.s.i. minimum tensile strength. Back pull-out design eliminates the need to disturb piping should the pump ever require service—the casing stays in the line. Centerline discharge. Stud mounted casing assures positive alignment and allows rotation of discharge to eight different positions. Openings are provided for test gauges, for venting and for draining the pump.

2. ENCLOSED BRONZE IMPELLER

Enclosed bronze impeller is of latest hydraulic design for maximum efficiency. It is balanced for vibration free operation. Precision fit to shaft and double-locked with key and cap screw.

3. REPLACEABLE CASING WEAR RING

Prevents wear on casing and is easy to replace.

4. MECHANICAL SHAFT SEAL

Mechanical Shaft Seal is self adjusting for temperatures up to 225°F. and pressures to 150 p.s.i. Has ceramic seat and carbon seal faces for long trouble-free service. Special seals are available for higher temperatures and for fluids other than water. Tapped opening is provided in the seal chamber for flushing seal faces.

MAXIMUM OPERATING CONDITIONS

MAXIMUM PUMPING SPEED	3500 RPM
MAXIMUM PUMPING TEMPERATURE*	225°F
MAXIMUM INLET PRESSURE	100 PSI
MAXIMUM CASE WORKING PRESSURE	200 PSI

*FOR STANDARD BUNA N SEAL

SUCTION & DISCHARGE SIZES

*SERIES	SUCTION	DISCHARGE
G6-1½	2"	1½"
G6-2 & 2F	2½"	2"
G6-2½ & 2½F	3"	2½"
G7-2 & 2F	2½"	2"
G7A-2 & 2F	2½"	2"
G7-2½ & 2½F	3"	2½"
G8-1½	2"	1½"
G9-2 & 2F	2½"	2"
G9-2½ & 2½F	3"	2½"
G9-3F & G9A-3F	4"	3"
G9-4F	5"	4"

*F Suffix Denotes ANSI 125# FF Flanges

5. BRONZE SHAFT SLEEVE

Gasketed and keyed hook-type sleeve protects shaft from wear a corrosion in seal area.

6. MOTORS

The standard Type JM motors supplied with these pumps offer advantages of quiet operation, controlled shaft deflection for lo mechanical seal life and bearings sized to provide good service l All motors are supplied by manufacturers providing field serv facilities.

7. INTERCHANGEABILITY

The complete liquid end of any size pump is interchangeable tween motors on close-coupled pumps and the BURKS pe frames of comparable size providing inventory flexibility, plus an tion for handling emergency service.

8. FACTORY TESTED

After careful assembly and inspection, each BURKS pump is t tory tested and will meet Hydraulic Institute Standards.

FOR TEMPERATURES TO 500°F.

All models, with the exception of the G7-2½ and all G9 series pumps available in a Jacketed Seal Cavity design for pumping hot oil, hot w and heat transfer fluids in common use in high temperature heatin cooling applications. This feature greatly extends seal life in high t perature applications. To order, add suffix "MJ" to pump catalog num for temperatures below 400°F and add suffix "MJK" to pump cat number for temperatures over 400°F. Example: G6-1½MJ. See Sectio High Temperature Pumps for more information.

MATERIALS OF CONSTRUCTION

Part	Bronze Fitted	All Bronze	All Iron
Adapter	Cast Iron	Bronze	Cast Iron
Casing	Cast Iron	Bronze	Cast Iron
Casing Wear Ring	Bronze	Bronze	Steel
Shaft	Steel	Steel	Steel
Shaft Sleeve	Bronze	Bronze	#316 S. Steel
Impeller	Bronze	Bronze	Cast Iron
Shaft Seal	Carbon-Ceramic S. Steel-Buna N	Carbon-Ceramic S. Steel-Buna N	Carbon-Ceramic S. Steel-Buna N

Appendix D

Master Control Panel Wiring and Panel Diagrams

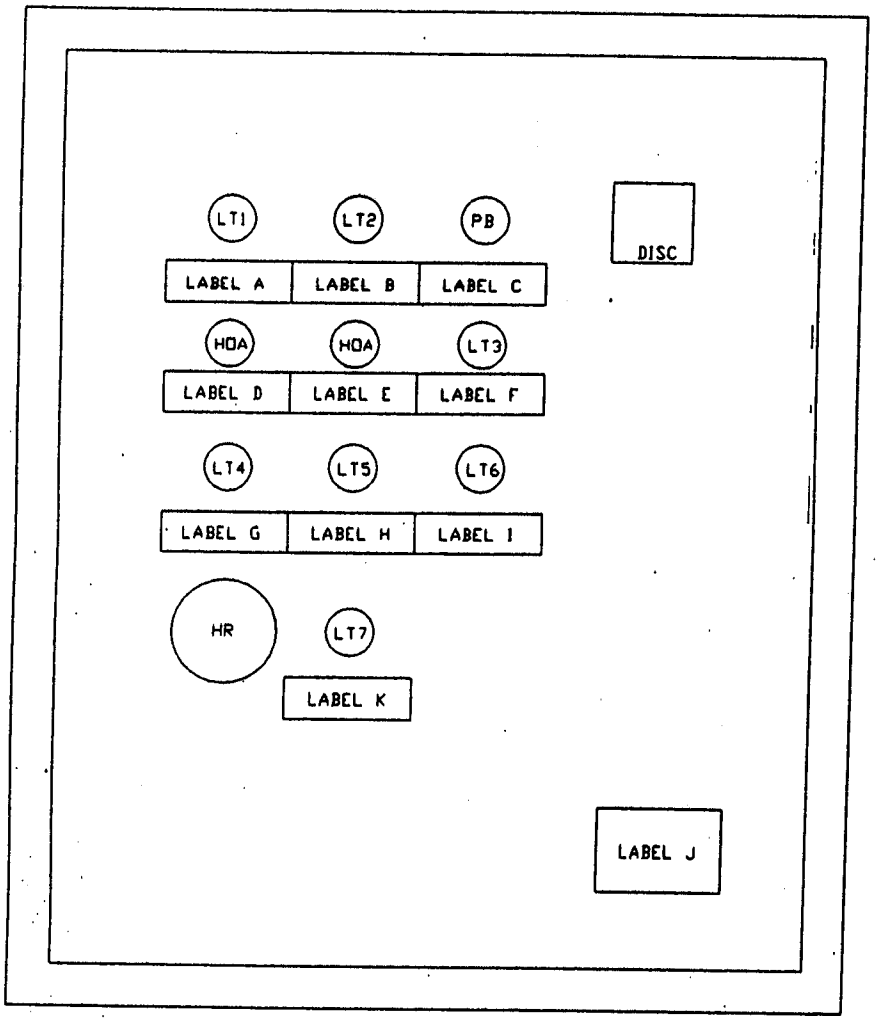

GENERAL NOTES

ENCLOSURE IS HOFFMAN TYPE 4 SINGLE HINGE (LEFT SIDE) WITH FIVE HOLD DOWNS AND LOCKABLE DOOR. ENCLOSURE IS 24' X 20' 9.25' DEEP. HOFFMAN UL FILE NUMBER W712282

LABEL LEGEND

A--- BLOWER RUN
B--- PUMP RUN
C--- ALARM RESET
D--- MAIN BLOWER
E--- LIQUID PUMP
F--- BLOWER HIGH TEMP
G--- BLOWER HIGH PRESSURE
H--- SUMP HIGH LEVEL
I--- STORAGE TANK HIGH LEVEL
J--- MFG BY
MSH SERVICES, INC
RIVIERA BCH, FL
K--- BLOWER LOW VACUUM

DEVICE LEGEND

LT1, LT2--- GREEN LIGHT
LT3,LT4,LT5,LT6,LT7--- RED LIGHT
PB--- PUSHBUTTON
HOA--- HAND-OFF-AUTO SWITCH
DISC--- MAIN DISCONNECT
HM--- HOURMETER

MSH SERVICES, INC.
1956 WEST 9TH STREET
RIVIERA BEACH, FLORIDA 33404

PROPIETARY
THIS DOCUMENT IS ISSUED IN STRICT CONFIDENCE THAT IT NOT BE COPIED, REPRINTED, OR DISCLOSED TO A THIRD PARTY, WHOLLY OR IN PART, WITHOUT WRITTEN CONSENT OF MSH SERVICES.

FOR: EESI
JOB NUMBER: 8027
TITLE: CECIL FIELD 2-FRONT PANEL
MSH DRAWING NUMBER: 1203
REVISION: 1
DATE: 04/25/2000
SCALE: NONE
SHEET: 1 OF 1
DRAWN/APPROVED BY:

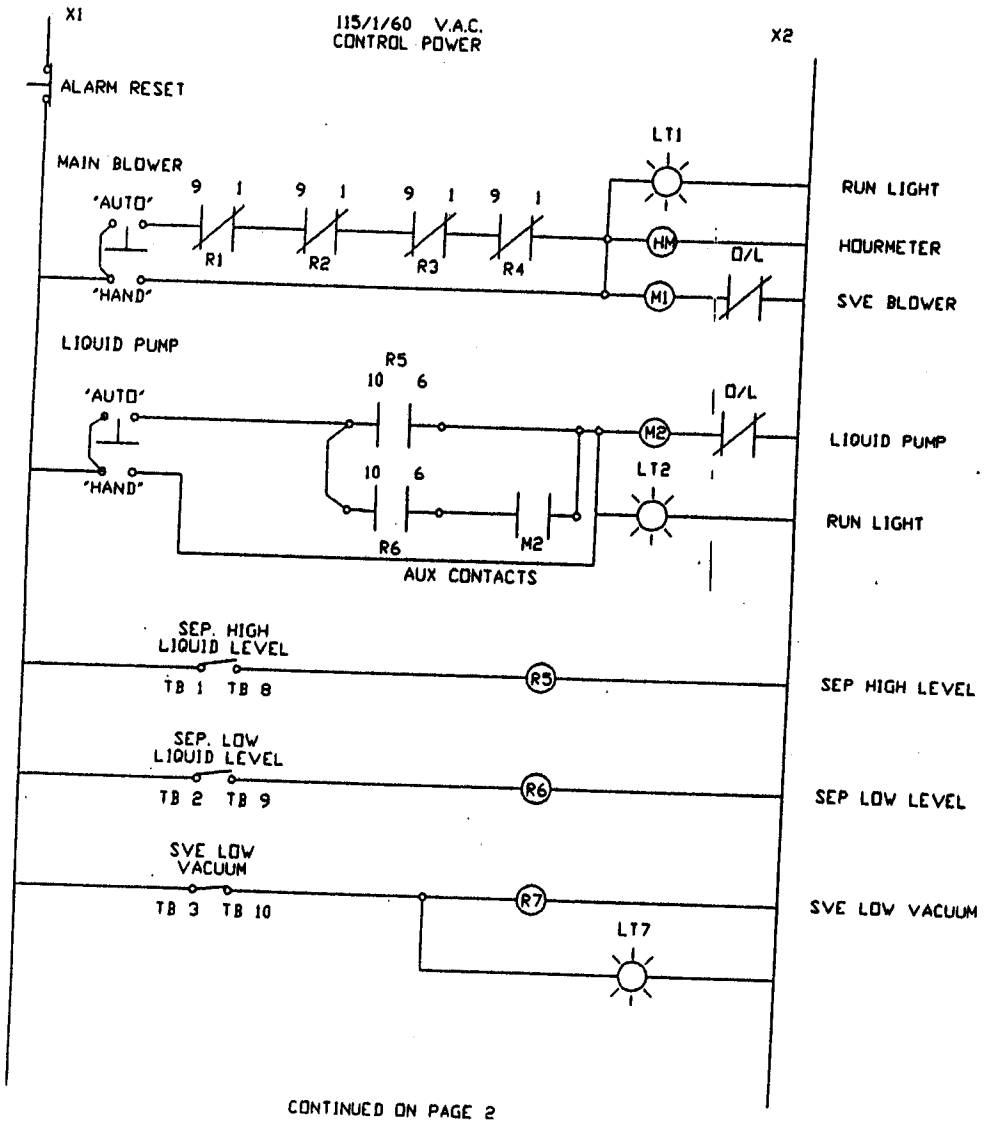

CONTINUED ON PAGE 2

GENERAL NOTES

——o DENOTES CONNECTION

TB2 DENOTES TERMINAL BLOCK #

LEAD P/S DENOTES DEVICE

—— —— DENOTES EXTERNAL TO PANEL

ALL WIRING IS #14 AWG

MAIN DISCONNECT AND OVER CURRENT PROTECTION TO BE SUPPLIED BY OTHERS AS PER THE CURRENT EDITION OF THE N.E.C.

115/1/60 V.A.C.
CONTROL POWER

NOTE: REVISION 1 ADDS LOW VACUUM LIGHT EDV1/4 POWER AND ALARM RESET BUTTON

MSH SERVICES, INC.
1956 WEST 9TH STREET
RIVIERA BEACH, FLORIDA 33404

PROPIETARY
THIS DOCUMENT IS ISSUED IN STRICT CONFIDENCE THAT IT NOT BE COPIED, REPRINTED, OR DISCLOSED TO A THIRD PARTY, WHOLLY OR IN PART, WITHOUT WRITTEN CONSENT OF MSH SERVICES.

FOR: EES1
JOB NUMBER: 8027
TITLE: CECIL FIELD-2
MSH DRAWING NUMBER: 1202
REVISION: 1
DATE: 04/25/2000
SCALE: NONE
SHEET: 1 OF 3
DRAWN/APPROVED BY:

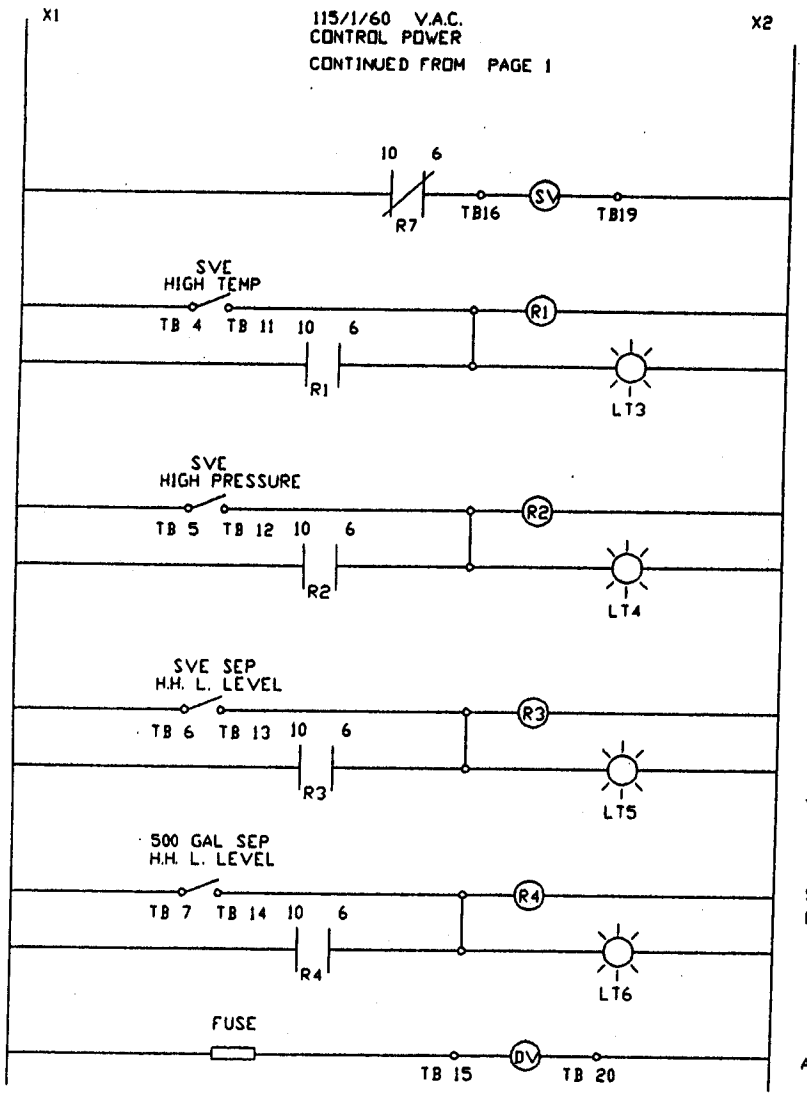

GENERAL NOTES

——o DENOTES CONNECTION

TB2 DENOTES TERMINAL BLOCK #

LEAD P/S DENOTES DEVICE

—— —— DENOTES EXTERNAL TO PANEL

ALL WIRING IS #14 AWG

MAIN DISCONNECT AND OVER CURRENT PROTECTION TO BE SUPPLIED BY OTHERS AS PER THE CURRENT EDITION OF THE N.E.C.

115/1/60 V.A.C.
CONTROL POWER

MSH SERVICES, INC.
1956 WEST 9TH STREET
RIVIERA BEACH, FLORIDA 33404

PROPIETARY
THIS DOCUMENT IS ISSUED IN STRICT CONFIDENCE THAT IT NOT BE COPIED, REPRINTED, OR DISCLOSED TO A THIRD PARTY, WHOLLY OR IN PART, WITHOUT WRITTEN CONSENT OF MSH SERVICES.

FOR: EESI
JOB NUMBER: 8027
TITLE: CECIL FIELD-2
MSH DRAWING NUMBER: 1202
REVISION: 1
DATE: 04/25/2000
SCALE: NONE
SHEET: 2 OF 3
DRAWN/APPROVED BY:

GENERAL NOTES

——o DENOTES CONNECTION

TB2 DENOTES TERMINAL BLOCK #

LEAD P/S DENOTES DEVICE

—— —— DENOTES EXTERNAL TO PANEL

ALL WIRING IS AS DENOTED

USE SAME FUSE (TYPE/SIZE) OR EQUIVALENT

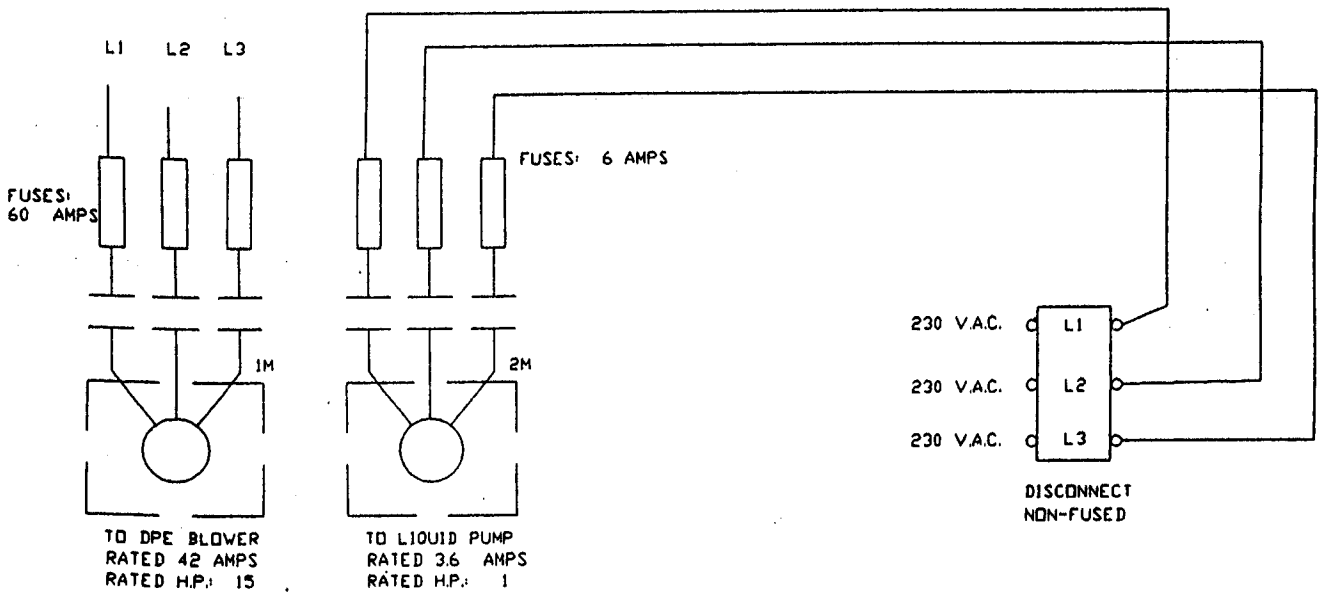

MAIN DISCONNECT AND OVER CURRENT PROTECTION TO BE SUPPLIED BY OTHERS AS PER THE CURRENT EDITION OF THE N.E.C.

CUSTOMER SUPPLIED
230/3/60 V.A.C. 100 AMPS

230 V.A.C.
POWER DISTRIBUTION

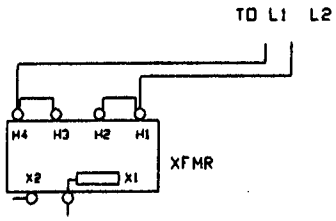

MSH SERVICES, INC.
1956 WEST 9TH STREET
RIVIERA BEACH, FLORIDA 33404

PROPIETARY
THIS DOCUMENT IS ISSUED IN STRICT CONFIDENCE THAT IT NOT BE COPIED, REPRINTED, OR DISCLOSED TO A THIRD PARTY, WHOLLY OR IN PART, WITHOUT WRITTEN CONSENT OF MSH SERVICES.

FOR: EES1
JOB NUMBER: 8027
TITLE: CECIL FIELD-2
MSH DRAWING NUMBER: 1202
REVISION: 1
DATE: 04/25/2000
SCALE: NONE
SHEET: 3 OF 3
DRAWN/APPROVED BY:

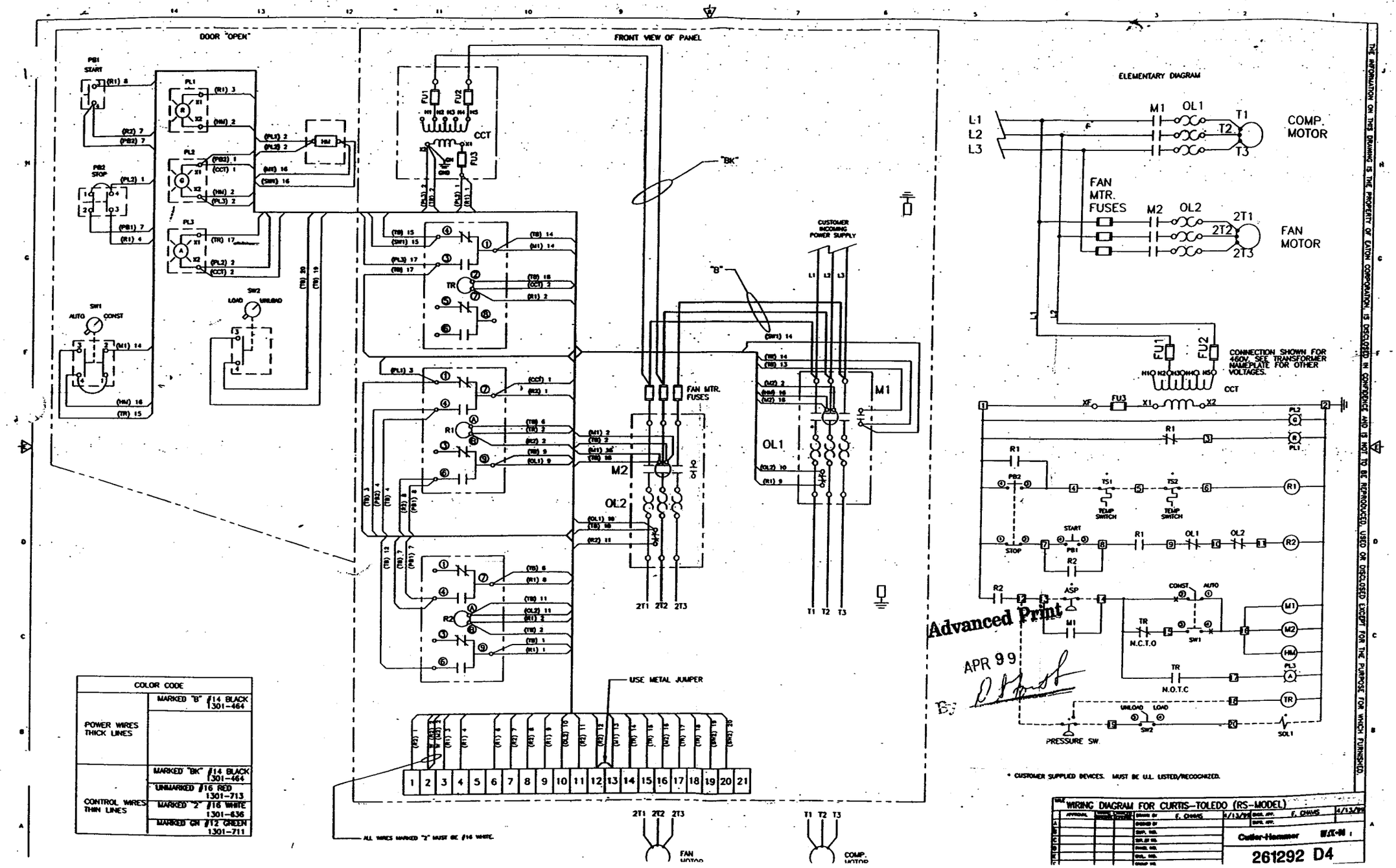
DOOR "OPEN"
FRONT VIEW OF PANEL
ELEMENTARY DIAGRAM
PB1 START
PB2 STOP
SW1 AUTO CONST
SW2 LOAD UNLOAD
PL1
PL2
PL3
HM
CCT
FU1
FU2
FU3
TR
R1
R2
M1
M2
OL1
OL2
"BK"
"B"
CUSTOMER INCOMING POWER SUPPLY
FAN MTR. FUSES
2T1 2T2 2T3
T1 T2 T3
USE METAL JUMPER
ALL WIRES MARKED "2" MUST BE #16 WHITE.
FAN MOTOR
COMP. MOTOR
L1
L2
L3
COMP. MOTOR
FAN MOTOR
CONNECTION SHOWN FOR 460V. SEE TRANSFORMER NAMEPLATE FOR OTHER VOLTAGES.
TEMP SWITCH
START
STOP
ASP
N.C.T.O
N.O.T.C
PRESSURE SW.
SOL1
* CUSTOMER SUPPLIED DEVICES. MUST BE U.L. LISTED/RECOGNIZED.
Advanced Print
APR 99
BY
COLOR CODE
POWER WIRES THICK LINES
MARKED "B" #14 BLACK 1301-464
CONTROL WIRES THIN LINES
MARKED "BK" #14 BLACK 1301-464
UNMARKED #16 RED 1301-713
MARKED "2" #16 WHITE 1301-636
MARKED GN #12 GREEN 1301-711
WIRING DIAGRAM FOR CURTIS-TOLEDO (RS-MODEL)
F. CHAMS
4/13/99
Cutler-Hammer
261292 D4
THE INFORMATION ON THIS DRAWING IS THE PROPERTY OF EATON CORPORATION, IS DISCLOSED IN CONFIDENCE AND IS NOT TO BE REPRODUCED, USED OR DISCLOSED EXCEPT FOR THE PURPOSE FOR WHICH FURNISHED.