N60200.AR.002671
NAS CECIL FIELD, FL
5090.3a

LETTER REGARDING UNIVERSITY OF FLORIDA REVIEW OF DEVELOPMENT OF ECOLOGICALLY-BASED REMEDIATION GOALS FOR LEAD IN SOIL AT OPERABLE UNIT 5 (OU 5) SITE 15 NAS CECIL FIELD FL
9/13/2000
UNIVERSITY OF FLORIDA

UNIVERSITY OF
FLORIDA

Center for Environmental & Human Toxicology

P.O. Box 110885
Gainesville, Florida 32611-0885
Tel.: (352) 392-4700, ext. 5500
Fax: (352) 392-4707

September 13, 2000

Ligia Mora-Applegate
Bureau of Waste Cleanup
Florida Department of Environmental Protection
2600 Blair Stone Road
Tallahassee, FL 32399

Dear Ms. Mora-Applegate:

We have reviewed at your request the August 15, 2000 report entitled "Assessment Endpoints, Measurement Endpoints, and Conceptual Model for Use in the Development of Ecologically-Based Remediation Goals for Lead in Soil at NAS Cecil Field Site 15" prepared by Tetra Tech NUS. The report addresses the Baseline Risk Assessment Problem Formulation step of the Ecological Risk Assessment (ERA) process (USEPA 1997).

We have the following comments and suggestions regarding this report.

1. The document states "Remediation goals will not be developed for PAHs, however, for the following two reasons. First, risks from PAHs via the terrestrial food web are generally negligible unless the PAHs are present at extremely high (i.e., percent levels) in soil (Eisler, 1987; Simon, 2000). Second, PAHs present at Site 15 are likely associated with the 'clay pigeon' fragments mentioned above. A study at one trap and skeet range showed that clay pigeons were comprised of 32 percent petroleum pitch, which consisted of several PAHs (Baer et al, 1995). Furthermore, the PAHs in the Baer et al (1995) study were tightly bound in the clay pigeons and were not readily bioavailable" (page 2, lines 7-13). Later in the document, a study is proposed in which soils with clay pigeon fragments will be screened to determine how much of the PAHs are actually in the soil. The document does not describe how results will be interpreted, or how this information will be used for risk assessment purposes.

   With respect to the comment that risks from PAHs are negligible unless PAHs are present in percent concentrations in soils, we would like to point out that the previous assessment by Tetra Tech NUS found that PAH concentrations in soils at Site 15 in some areas were more than four times the calculated, risk-based, site-specific, preliminary remediation goal (481 vs. 106 mg/kg). As to the bioavailability of PAHs in clay pigeons, the study by Baer et al. (1995) is not particularly useful for this site. Baer and coworkers studied the effects of short-term exposures (2-7 days) of aquatic organisms to water in

contact with crushed clay pigeons. While this study might provide some information on the extent to which PAHs leach rapidly from clay pigeons in aquatic environments, it is not informative as to the gastrointestinal bioavailability of PAHs from clay pigeon particulates, which is of more concern here. Our third point is that the distribution of PAHs between visible clay pigeon fragments and soils is certainly relevant for current sites risks, but probably not for future site risks. Over time, the clay pigeon fragments will degrade and ultimately become small particulates that are, for practical purposes, indistinguishable from the soil. We should keep this in mind when evaluating risks from PAHs at this site.

2. The report discusses four exposure pathways: One considers direct (incidental) soil ingestion by birds and mammals, another a direct path from plants to birds and mammals; while the other two consider insectivorous birds and mammals. At this stage of the ERA process, is important to consider all potential exposure pathways. The accompanying figure shows a simplified model of the trophic food web likely to be found at Site 15. We suggest that the conceptual site model be revised as to explicitly include all the relevant links in the system. This exercise will, for example, put in perspective the usefulness of including the duff layer in the modeling of lead transfer from soil to the relevant ecological receptors. This exposure pathway in reality is quite complex, encompassing the absorption and transport of lead by pine trees and its deposition in the pine needles, the consumption of pine needles by fungi, the foraging of fungi by oribatid mites and collembolla, the predation on these organisms by other hexapoda, nematodes and spiders, and the final consumption of these organisms by birds and mammals (Petersen and Luxton 1982; Coleman and Crossley 1995).

3. We propose to expand the conceptual model to also include vascular plants, omnivorous mammals, and amphibians as relevant ecological receptors. **Vascular plants**: In our opinion, the results of the lettuce seed germination test do not provide justification for eliminating phytotoxicity as an assessment endpoint for this site. Available data suggest that seed germination is one of the least sensitive endpoints for metal toxicity in plants (Pahlson 1989). While decreases in root length and stem growth have been documented in the range of 5-1000 mg/kg lead in soil (Efroymson et al. 1997; Pahlson 1989), concentrations as high as 20,000 μg/L in the medium did not affect seed germination of four tree species (Pahlson 1989). In addition, the lead EC_{50} for radish germination was found to be more than four times the EC_{50} for root length reduction for the same species (Fargasova 1994). **Omnivorous mammals**: The report argues that the exposure pathway "Soil to vegetation to herbivorous animals" will "not be evaluated because lead accumulation in plants is usually less than accumulation in invertebrates (Sample et al, 1998; ORNL, 1998)" (page 3, lines 27-28). This argument is only valid in relation to the direct exposure pathway of soil to invertebrates, represented by the earthworm. Lead accumulation is higher for earthworms than for plants, probably because earthworms live within the soil and ingest large quantities of it to extract organic material. Unlike earthworms, aboveground invertebrates (insects, spiders, snails and slugs, etc) forage mostly on plant material or other invertebrates. Even if accumulation by plants is lower than accumulation by some soil invertebrates, herbivorous mammals may still be significantly impacted by lead through the food chain. Ma (1989) reported strongly elevated lead concentrations in both herbivorous and carnivorous small mammals living at a

shooting range. **Amphibians**: We suggest including amphibians as ecological receptors for Site 15. Several species of treefrogs (genus *Hyla*) and toads (genus *Bufo*) inhabit pine flatwoods, breeding in ephemeral ponds and puddles that form after heavy summer rains (Ashton and Ashton 1988; Hart and Newman 1995). Studies at other trap and skeet ranges have shown that frogs inhabiting these areas have lead concentrations in bone that are four times those of white-footed mice and short-tailed shrews, suggesting that amphibians may experience higher levels of exposure as compared to other terrestrial vertebrates (Stansley and Roscoe 1996).

4. The report states that "The decision of whether to use the (earthworm) BAF from previous toxicity tests will be based on the results of the soil/duff invertebrate survey. If the survey determines that earthworms are plentiful at the site, a BAF for lead derived from a previous study at Site 15 could be utilized" (page 6, lines 15-17). What will the course of action be if earthworms are not plentiful (as expected), but the dominant food source is ground insects? This isn't clear in the document.

5. The accompanying figure suggests that the most accurate and scientifically defensible approach to develop remediation goals for Site 15 would require the collection of arthropods at various microhabitats, and of herbs, seeds, and fruits found at Site 15 to generate BAFs applicable to all the vertebrate receptors under study. We think is not advisable to attempt generating a soil-to-duff BAF because that information will still be insufficient to predict how much lead reaches the arthropods preyed upon by vertebrate receptors. The important information is a soil-to-invertebrate BAF obtained from bugs that are known (or suspected) to be preyed by vertebrate receptors. What happens between soil and invertebrates is essentially irrelevant. It might be worthwhile to consider expanding the proposed invertebrate survey to collect soil and litter invertebrates, bark-inhabiting and flying insects, as well as herbs, seeds, and fruits in order to generate site-specific BAFs for each of these major groups. Sampling of arthropods should be conducted using standard methodology to ensure that the diversity and abundance of species present at the site is properly assessed (e.g. Southwood 1978). This effort will significantly reduce the level of uncertainty attached to the various exposure pathways and assessment endpoints that should be evaluated.

We hope this comments and suggestions are helpful. If you have any questions, please do not hesitate to contact us.

Sincerely,

Hugo G. Ochoa, D.V.M., Ph.D.

Stephen M. Roberts, Ph.D.

References

1. Ashton, R.E. and Ashton, P.S. 1988. Handbook of Reptiles and Amphibians of Florida. Part Three: The Amphibians. Windward Publishing, Inc., Miami, FL.

2. ATSDR, (Agency for Toxic Substances and Disease Registry). 1995. Toxicological Profile for Polycyclic Aromatic Hydrocarbons. U.S. Department of Health and Human Services, Atlanta, GA.

3. Baer, K.N., Hutton, D.G., Boeri, R.L., Ward, T.J., and Stahl, R.G. 1995. Toxicity evaluation of trap and skeet shooting targets to aquatic species. Ecotoxicology **4**: 385-392.

4. Coleman, D.C. and Crossley, D.A. 1995. Fundamentals of Soil Ecology. Academic Press, San Diego, CA.

5. Efroymson, R.A., Will, M.E., Sutter, G.W., and Wooten, A.C. 1997. Toxicological Benchmarks for Screening Contaminants of Potential Concern for Effects on Terrestrial Plants: 1997 Revision. United States Department of Energy, Office of Environmental Management, Oak Ridge National Laboratory, Oak Ridge, Tennessee.

6. Fargasova, A. 1994. Effect of Pb, Cd, Hg, As, and Cr on germination and root growth of *Sinapis alba* seeds. Bulletin of Environmental Contamination and Toxicology **52**: 452-456.

7. Hart, R. and Newman, J.R. 1995. The Importance of Isolated Wetlands to Fish and Wildlife in Florida. Florida Game and Fresh Water Fish Commission, Tallahassee, FL.

8. Ma, W.C. 1989. Effect of soil pollution with metallic lead pellets on lead bioaccumulation and organ/body weight alterations in small mammals. Archives of Environmental Contamination and Toxicology **18**: 617-622.

9. Pahlson, A.M.B. 1989. Toxicity of heavy metals (Zn, Cu, Cd, Pb) to vascular plants. Water, Air, and Soil Pollution **47** : 287-319.

10. Petersen, H. and Luxton, M. 1982. A comparative analysis of soil fauna populations and their role in decomposition processes. Oikos **39**: 288-388.

11. Southwood, R. 1978. Ecological Methods : With Particular Reference to the Study of Insect Populations . Chapman and Hall, New York, NY.

12. Stansley, W. and Roscoe, D.E. 1996. The uptake and effects of lead in small mammals and frogs at a trap and skeet range. Archives of Environmental Contamination and Toxicology **30**: 220-226.

13. USEPA 1997. Ecological Risk Assessment Guidance for Superfund: Process for Designing

and Conducting Ecological Risk Assessments. Office of Solid Waste and Emergency Response, Washington, DC.

Figure caption

Simplified food web likely to be found at Site 15. Note that incidental soil ingestion was not included in the model.

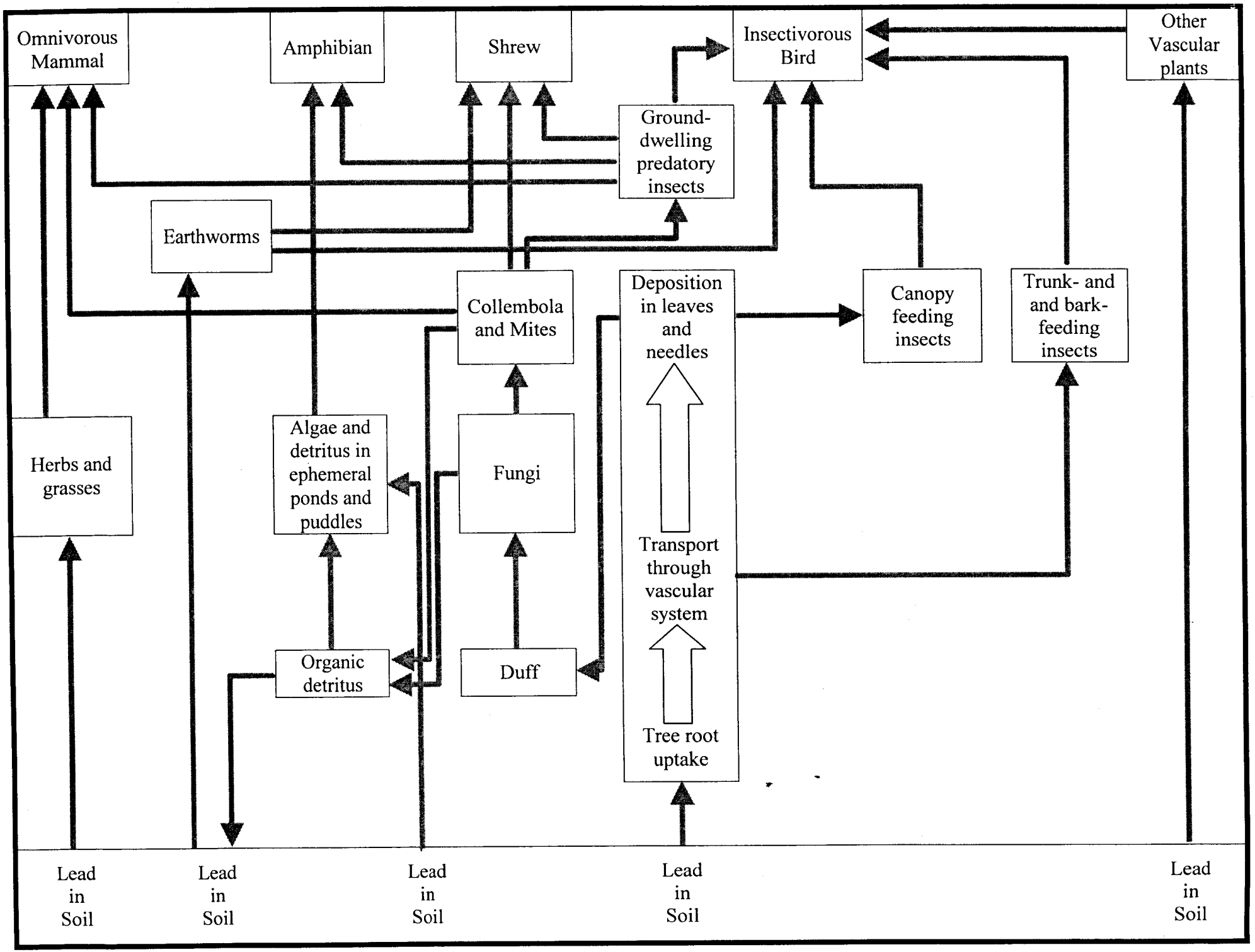
Omnivorous Mammal
Amphibian
Shrew
Insectivorous Bird
Other Vascular plants
Ground-dwelling predatory insects
Earthworms
Collembola and Mites
Deposition in leaves and needles
Canopy feeding insects
Trunk- and and bark-feeding insects
Herbs and grasses
Algae and detritus in ephemeral ponds and puddles
Fungi
Transport through vascular system
Organic detritus
Duff
Tree root uptake
Lead in Soil
Lead in Soil
Lead in Soil
Lead in Soil
Lead in Soil