N60200.AR.001917
NAS CECIL FIELD, FL
5090.3a

MONITORING WELL REPLACEMENT AND SAMPLING LETTER REPORT FOR DAY TANK 2

NAS CECIL FIELD FL

5/25/1999

TETRA TECH NUS INC

7895-3.1.1

TETRA TECH NUS, INC.
7018 A.C. Skinner Parkway ▪ Suite 250 ▪ Jacksonville, FL 32256
(904) 281-0400 ▪ FAX (904) 281-0070 ▪ www.tetratech.com

TtNUS-JAX-99-0188

May 25, 1999

Project Number 7895

Commanding Officer
Department of the Navy
SOUTHNAVFACENGCOM
ATTN: Mr. Bryan Kizer
2155 Eagle Drive
North Charleston, South Carolina 29406

Reference: Clean Contract No. N62467-94-D0888
Contract Task Order No. 0065

Subject: Monitoring Well Replacement and Sampling Report
For Day Tank 2
Naval Air Station, Cecil Field
Jacksonville, Florida

Dear Mr. Kizer:

Tetra Tech NUS, Inc. (TtNUS) is pleased to submit the Monitoring Well Replacement and Sampling Report for the above referenced Contract Task Order (CTO). This report was prepared for the U.S. Navy Southern Division Naval Facilities Engineering Command under CTO-065, for the Comprehensive Long-term Environmental Action Navy (CLEAN) Contract Number N62467-94-D-0888. The objective of this task order was to replace the monitoring wells removed during soil excavation activities performed at Day Tank 2 and to provide groundwater analytical results for the new monitoring wells.

TtNUS replaced eight former monitoring wells known as PZ-12, CEF-43-14D, CEF-43-25, CEF-43-28D, CEF-43-40, CEF-43-41, CEF-43-47D, and CEF-342-2D between April 6 and 12, 1999. The new monitoring wells were labeled PZ-12A, CEF-43-14DA, CEF-43-25A, CEF-43-28DA, CEF-43-40A, CEF-43-41A, CEF-43-47DA, and CEF-342-2DB. Table 1 provides a summary of monitoring well construction details. The well locations are depicted on Figure 1. Well construction and development logs are provided in Attachments A and B.

On April 15, 1999, TtNUS collected groundwater samples from the eight monitoring wells. Sampling was conducted in accordance with TtNUS' Florida Department of Environmental Protection (FDEP) approved Comprehensive Quality Assurance Plan (No. 980038 Rev. 1).

Prior to the collection of the groundwater samples, depth to water level measurements were recorded from each of the wells. The depth to water ranged from 6.55 to 10.37 feet below top of casing. Depth to water data is provided in Table 1. Before groundwater flow information can be generated, the elevations of the top-of-casing for the wells must be determined. TtNUS plans to have the wells surveyed in conjunction with the next NASCF survey mobilization. The well coordinates will be tied into the coordinate system used for Sites 36 and 37 at NASCF.

Following collection of the groundwater samples, the samples were transported to Savannah Laboratories in Savannah, Georgia, for analysis. The samples were analyzed for volatile organic compounds (VOCs) and polynuclear aromatic hydrocarbons (PAHs) in accordance with EPA Methods 8021B and 8310. Figure 2 depicts the VOCs and PAHs detected in samples collected during the April 1999 sampling event. The analytical results are summarized in Table 2. A copy of the laboratory report is provided in Attachment C. Copies of the groundwater sample log sheets are provided in Attachment D.

No tested compounds were detected in monitoring wells CEF-43-14DA, CEF-43-28DA or CEF-43-47DA. Though tested constituents were detected in wells CEF-43-25A and CEF-342-2DB, none of the concentrations were above Chapter 62-770, Florida Administrative Code (FAC), Groundwater Cleanup Target Levels (GCTL). The groundwater sample from monitoring well PZ-12A contained 96 µg/L benzene, 110 µg/L ethylbenzene, and 510 µg/L total xylenes. FDEP GCTLs for those constituents are 1, 30, and 20 µg/L, respectively. The groundwater sample from monitoring well CEF-43-40A contained less than 5.0 µg/L benzene, 42 µg/L ethylbenzene, and 194 µg/L total xylenes. The groundwater sample from monitoring well CEF-43-41A contained less than 5.0 µg/L benzene, 100 µg/L ethylbenzene, and 217.3 µg/L total xylenes.

In the Harding Lawson Associates (HLA) Site Assessment Report (SAR), HLA reported free product ranging from 0.32 to 3.38 feet thick in shallow monitoring wells PZ-12A, CEF-43-25A, CEF-43-40A, and CEF-43-41A. Groundwater data from the shallow replacement wells installed by TtNUS indicate petroleum impacts, but no free product was encountered during the April 1999 well installation and sampling program.

HLA's SAR depicts CEF-43-28D and CEF-43-47D within the Day Tank 2 intermediate groundwater plume. However, groundwater samples collected in April 1999 from the two replacement wells (CEF-43-28DA and CEF–43-47DA) did not exceed GCTL criteria.

Groundwater samples collected from HLA's deep monitoring wells CEF-342-2D and CEF-43-14D contained benzene above FDEP cleanup level. No tested constituents were detected above GCTLs in replacement wells CEF-43-2DA and CEF-43-14DA during the April 1999 sampling event.

If you have any questions with regard to this submittal, please contact the undersigned at (904) 281-0400.

Very truly yours,

3/26/99

Samuel P. Pratt
Task Order Manager

Debbie Wroblewski
Program Manager

Enclosures

cc: D. Vaughn Wright, US EPA
M. Deliz, FDEP (2 copies)
D. Kruzicki, NAS Cecil Field (2 copies)
M. Speranza, TtNUS
M. Perry, TtNUS
File CTO-65

ACAD: 7895GM05.dwg 05/21/99 HJP

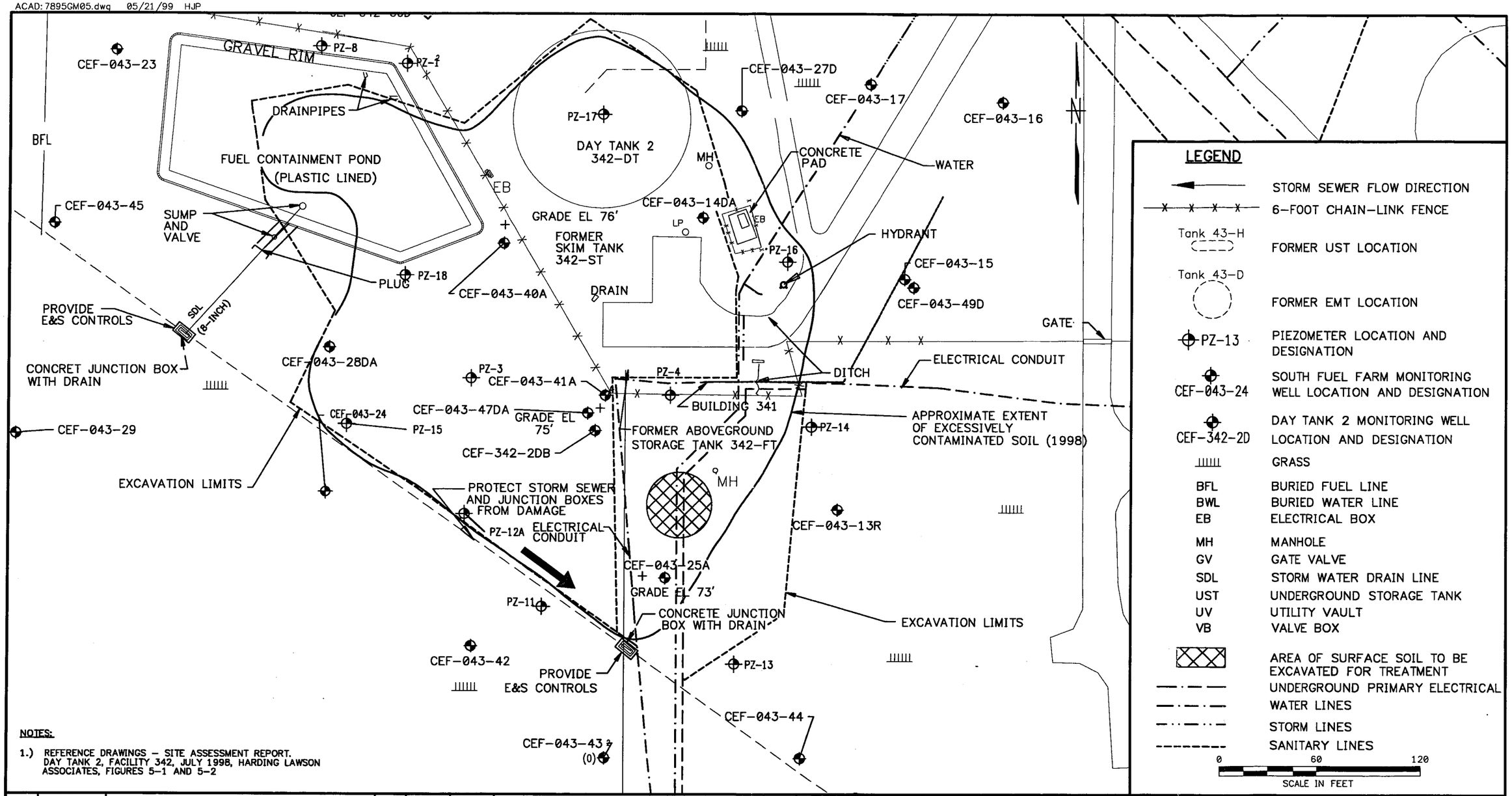

NOTES:

1.) REFERENCE DRAWINGS – SITE ASSESSMENT REPORT. DAY TANK 2, FACILITY 342, JULY 1998, HARDING LAWSON ASSOCIATES, FIGURES 5-1 AND 5-2

NO.	DATE	REVISIONS	BY	CHKD	APPD	REFERENCES

DRAWN BY HJP DATE 9/22/98
CHECKED BY DATE
COST/SCHED-AREA
SCALE AS NOTED

SITE PLAN
MONITORING WELL REPLACEMENT
DAY TANK 2
NAVAL AIR STATION CECIL FIELD
JACKSONVILLE, FLORIDA

CONTRACT NO. 7895
APPROVED BY DATE
APPROVED BY DATE
DRAWING NO. FIGURE 1
REV. 0

FORM CADD NO. SDV_BH12.DGN - REV 0 - 1/20/98

ACAD:7895GM06.dwg 05/21/99 HJP

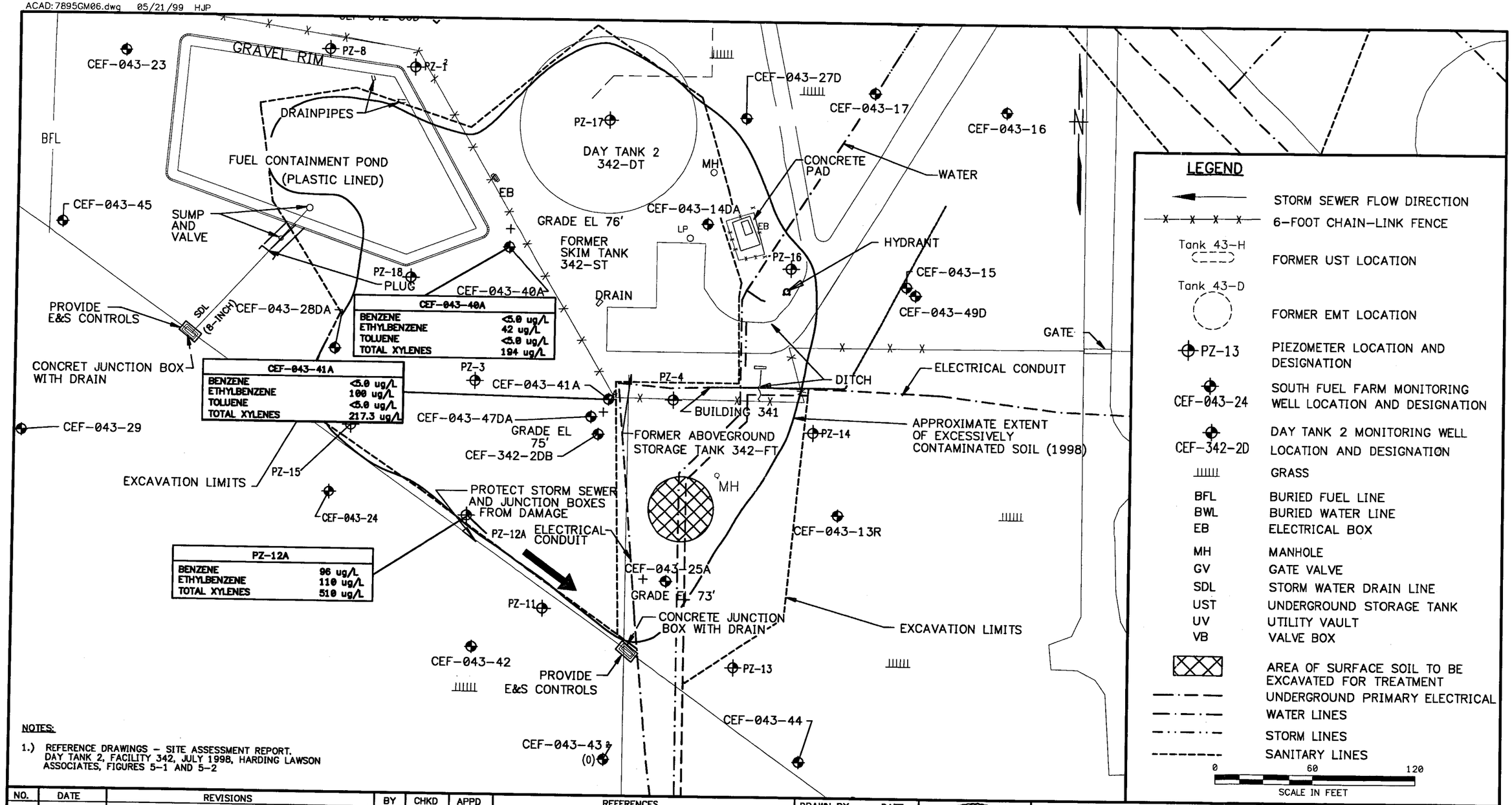

CEF-043-40A	
BENZENE	<5.0 ug/L
ETHYLBENZENE	42 ug/L
TOLUENE	<5.0 ug/L
TOTAL XYLENES	194 ug/L

CEF-043-41A	
BENZENE	<5.0 ug/L
ETHYLBENZENE	100 ug/L
TOLUENE	<5.0 ug/L
TOTAL XYLENES	217.3 ug/L

PZ-12A	
BENZENE	96 ug/L
ETHYLBENZENE	110 ug/L
TOTAL XYLENES	510 ug/L

NOTES:

1.) REFERENCE DRAWINGS – SITE ASSESSMENT REPORT. DAY TANK 2, FACILITY 342, JULY 1998, HARDING LAWSON ASSOCIATES, FIGURES 5-1 AND 5-2

NO.	DATE	REVISIONS	BY	CHKD	APPD	REFERENCES

DRAWN BY HJP DATE 9/22/98
CHECKED BY DATE
COST/SCHED-AREA
SCALE AS NOTED

DISSOLVED HYDROCARBONS
APRIL 15, 1999
MONITORING WELL REPLACEMENT
DAY TANK 2
NAVAL AIR STATION CECIL FIELD
JACKSONVILLE, FLORIDA

CONTRACT NO. 7895
APPROVED BY DATE
APPROVED BY DATE
DRAWING NO. FIGURE 2
REV. 0

FORM CADD NO. SDV_BH12.DGN – REV 0 – 1/20/98

Table 1
Summary of Monitoring Well Construction Details

Monitoring Well Sampling Letter Report
Day Tank 2
Naval Air Station Cecil Field
Jacksonville, Florida

Well Number	Total Depth of Well (Feet bls)	Screened Interval Depth (Feet bls)	Date of Water Level Measurement	Depth to Water (Feet btoc)
PZ-12A	15	5 to 15	4/15/99	6.55
CEF-43-14DA	87	82 to 87	4/15/99	10.37
CEF-43-25A	15.3	5.3 to 15.3	4/15/99	7.33
CEF-43-28DA	57.5	52.5 to 57.5	4/15/99	7.02
CEF-43-40A	15	5 to 15	4/15/99	7.85
CEF-43-41A	15.1	5.1 to 15.1	4/15/99	8.42
CEF-43-47DA	43	38 to 43	4/15/99	8.89
CEF-342-2DB	87	82 to 87	4/15/99	8.95

Notes: The wells are flush mount.
bls = below land surface
msl = mean sea level
btoc = below top of casing

Table 2
Summary of Groundwater Sample Analytical Results

Monitoring Well Sampling Letter Report
Day Tank 2
Naval Air Station Cecil Field
Jacksonville, Florida

Compound Detected	GCTL[1] (µg/L)	PZ-12A		CEF-43-14DA		CEF-43-25A		CEF-43-28DA*	CEF-43-40A		CEF-43-41A		CEF-43-47DA*	CEF-342-2DB	
		4/98	4/15/99	1/98	4/15/99	4/98	4/15/99	4/15/99	4/98	4/15/99	4/98	4/15/99	4/15/99	1/98	4/15/99
Volatile Organic Compounds (µg/L)															
Benzene	1	FP	96	16	ND	FP	ND	ND	FP	<5.0	FP	<5.0	ND	4	ND
Ethylbenzene	30	FP	110	ND	ND	FP	7.4	ND	FP	42	FP	100	ND	ND	ND
Toluene	40	FP	13	ND	ND	FP	1.8	ND	FP	<5.0	FP	<5.0	ND	ND	ND
Total Xylenes	20	FP	510	ND	ND	FP	1.3	ND	FP	194	FP	217.3	ND	ND	1.3
Polynuclear Aromatic Hydrocarbons (µg/L)															
Naphthalene	20	FP	14	ND	ND	FP	ND	ND	FP	ND	FP	20	ND	ND	ND
1-Methylnaphthalene	none	FP	9.1	ND	ND	FP	ND	ND	FP	ND	FP	67	ND	ND	ND
2-Methylnaphthalene	none	FP	4.2	ND	ND	FP	ND	ND	FP	ND	FP	89	ND	ND	ND

[1] Chapter 62-770, Florida Administrative Code (September 23, 1997), Groundwater Cleanup Target Level (GCTL).

Notes: µg/L = Micrograms Per Liter
<5 = less than 5.
ND = none detected.
NC = not collected.
1998 data collected by Harding Lawson and Associates, prior to destruction and replacement of original wells.
FP = not sampled due to presence of free product.
* = 1998 data not recorded in Harding Lawson and Associates' SAR.

ATTACHMENT A

MONITORING WELL CONSTRUCTION SHEETS

AND

CERTIFICATES OF CONFORMANCE

Tetra Tech NUS, Inc.

WELL No.: JE ~~CFF~~ PZ-12A

MONITORING WELL SHEET

PROJECT:	NAS CECIL FIELD	DRILLING Co.:	Precision	BORING No.:	JE ~~CFF~~ PZ-12A
PROJECT No.:	JE ~~0039~~ ~~CCS~~ 7895	DRILLER:	Scott Hauge	DATE COMPLETED:	4-7-99
SITE:	Day Tank 2	DRILLING METHOD:	Hollow Stem	NORTHING:	
GEOLOGIST:	Mervin Dale	DEV. METHOD:	Submersible	EASTING:	

Ground Elevation =

Datum:

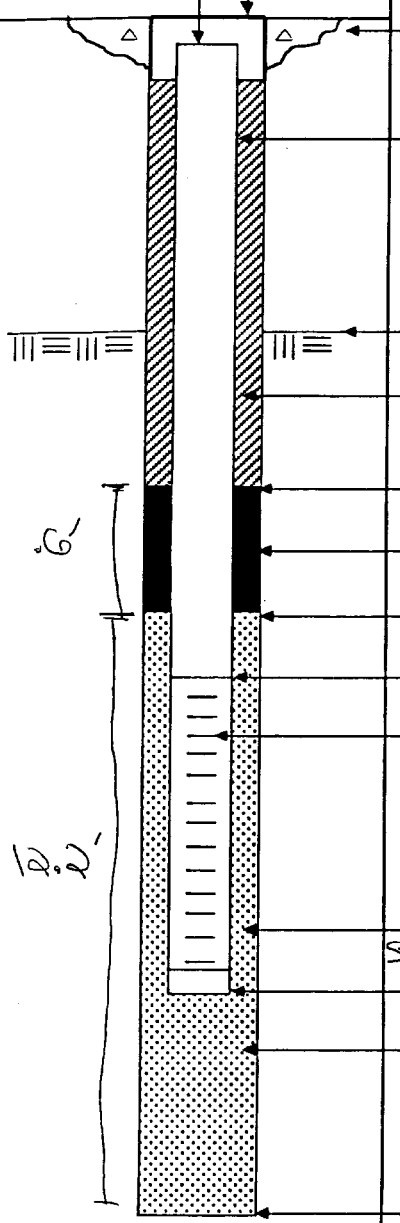

Not to Scale

Elevation / Depth of Top of Riser: /

Elevation / Height of Top of Surface Casing: Flush/

I.D. of Surface Casing: 8"

Type of Surface Casing: Steel Flush Mount

Type of Surface Seal: Concrete

I.D. of Riser: 2"

Type of Riser: PVC

Borehole Diameter: 8"

Elevation / Depth Top of Rock: —/

Type of Backfill: ~~Bentonite~~ ~~Grout~~ Portland Cement Type I / ~~Bentonite~~ Powder MB

Elevation / Depth of Seal: (32") 2.7' bls

Type of Seal: Bentonite Chips

Elevation / Depth of Top of Filter Pack: (40") 3.3' bls

Elevation / Depth of Top of Screen: (5.1') 5' 1" bls

Type of Screen: PVC

Slot Size x Length: 0.010" x 10'

I.D. of Screen: 2"

Type of Filter Pack: 20/30 Sand Standard Brand / 5.5 50 lb bags

Elevation / Depth of Bottom of Screen (15.1') 5' 1" bls

Elevation / Depth of Bottom of Filter Pack: 15.5' /

Type of Backfill Below Well: 20/30 Sand

Elevation / Total Depth of Borehole: 15.5' /

Tetra Tech NUS, Inc.

WELL No.: CEF-43-25A

MONITORING WELL SHEET

PROJECT:	NAS CECIL FIELD	DRILLING Co.:	Precision	BORING No.:	CEF-43-25A
PROJECT No.:	~~0032~~ ~~005~~ 7895 (MD)	DRILLER:	Scott Hauge	DATE COMPLETED:	4-7-99
SITE:	Day Tank 2	DRILLING METHOD:	Hollow Stem	NORTHING:	
GEOLOGIST:	Mervin Dale	DEV. METHOD:	Submersible	EASTING:	

Ground Elevation =

Datum:

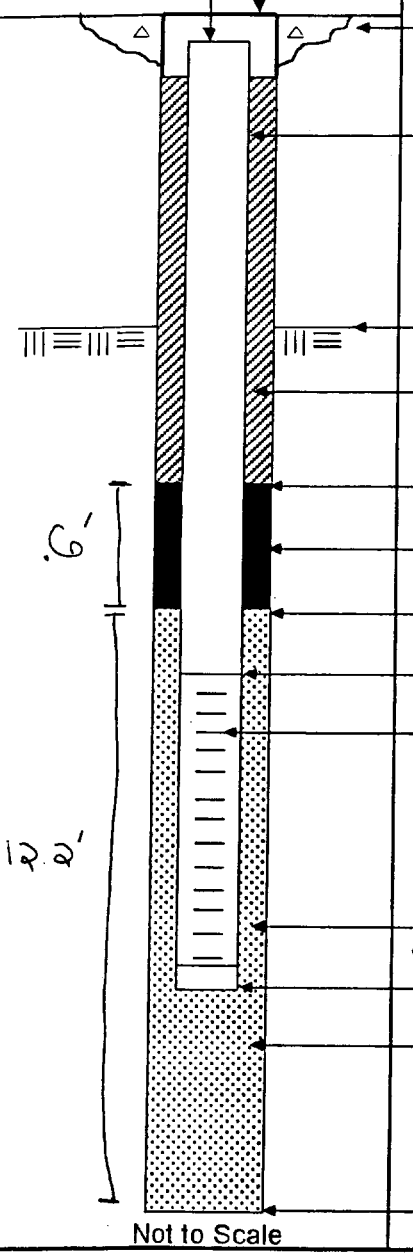

Not to Scale

Elevation / Depth of Top of Riser: (.3') 4" bls

Elevation / Height of Top of Surface Casing: Flush

I.D. of Surface Casing: 8"

Type of Surface Casing: Steel Flush Mount

Type of Surface Seal: Concrete

I.D. of Riser: 2"

Type of Riser: PVC

Borehole Diameter: 8"

Elevation / Depth Top of Rock: —/

Type of Backfill: ~~Bentonite~~ ~~Grout Portland Cement~~ Type I

Elevation / Depth of Seal: (32") JE 2.7' bls

Type of Seal: Bentonite Chips

Elevation / Depth of Top of Filter Pack: (40") 3.3' bls

Elevation / Depth of Top of Screen: 5.3' bls

Type of Screen: PVC

Slot Size x Length: 0.010" x 10'

I.D. of Screen: 2"

Type of Filter Pack: 20/30 sand

Standard ~~Es~~ brand 55 lb bags JE

Elevation / Depth of Bottom of Screen: 15.3 ~~14.7~~ bls

Elevation / Depth of Bottom of Filter Pack: 15.5' JE ~~16~~ bls

Type of Backfill Below Well: 20/30 sand

Elevation / Total Depth of Borehole: 15.5' JE ~~16~~ bls

Tetra Tech NUS, Inc.

WELL No.: CEF-43-40A

MONITORING WELL SHEET

PROJECT:	NAS CECIL FIELD	DRILLING Co.:	Precision	BORING No.:	CEF-43-40A
PROJECT No.:	~~0038 55~~ 7895	DRILLER:	Scott Hauge	DATE COMPLETED:	4-6-99
SITE:	Day Tank 2	DRILLING METHOD:	Hollow Stem	NORTHING:	
GEOLOGIST:	Mervin Dale	DEV. METHOD:	Submersible	EASTING:	

Ground Elevation =

Datum:

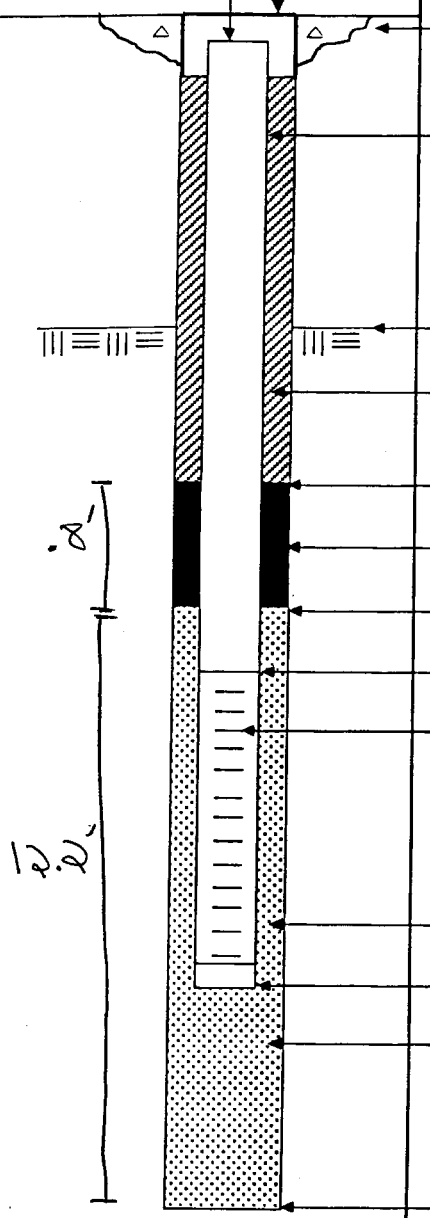

Not to Scale

Elevation / Depth of Top of Riser: /

Elevation / Height of Top of Surface Casing: Flush /

I.D. of Surface Casing: 8"

Type of Surface Casing: ~~Stet~~ Steel Flush Mount

Type of Surface Seal: Concrete

I.D. of Riser: 2"

Type of Riser: PVC

Borehole Diameter: 8"

Elevation / Depth Top of Rock: —/

Type of Backfill: ~~Bentonite~~ ~~Grout Portland Cement~~ Type I

Elevation / Depth of Seal: (30") 2.5' bls ~~2.7'~~ ~~3'~~ bls

Type of Seal: Bentonite Chips

Elevation / Depth of Top of Filter Pack: (40") 3.3' bls

Elevation / Depth of Top of Screen: 5' bls

Type of Screen: PVC

Slot Size x Length: 0.010" x 10'

I.D. of Screen: 2"

Type of Filter Pack: 20/30 sand Standard Brand

Elevation / Depth of Bottom of Screen: 15' bls

Elevation / Depth of Bottom of Filter Pack: ~~16' bls~~ 15.5' bls

Type of Backfill Below Well: 20/30 sand

Elevation / Total Depth of Borehole: 15.5' ~~16' bls~~

Tetra Tech NUS, Inc.

WELL No.: CEF 43-41A

MONITORING WELL SHEET

PROJECT:	NAS CECIL FIELD	DRILLING Co.:	Precision	BORING No.:	CEF-43-41A
PROJECT No.:	JE ~~0039~~ ~~0657~~ 7895	DRILLER:	Scott Hauge	DATE COMPLETED:	4-7-99
SITE:	Day Tank 2	DRILLING METHOD:	Hollow Stem	NORTHING:	
GEOLOGIST:	Mervin Dale	DEV. METHOD:	Submersible	EASTING:	

Ground Elevation =

Datum:

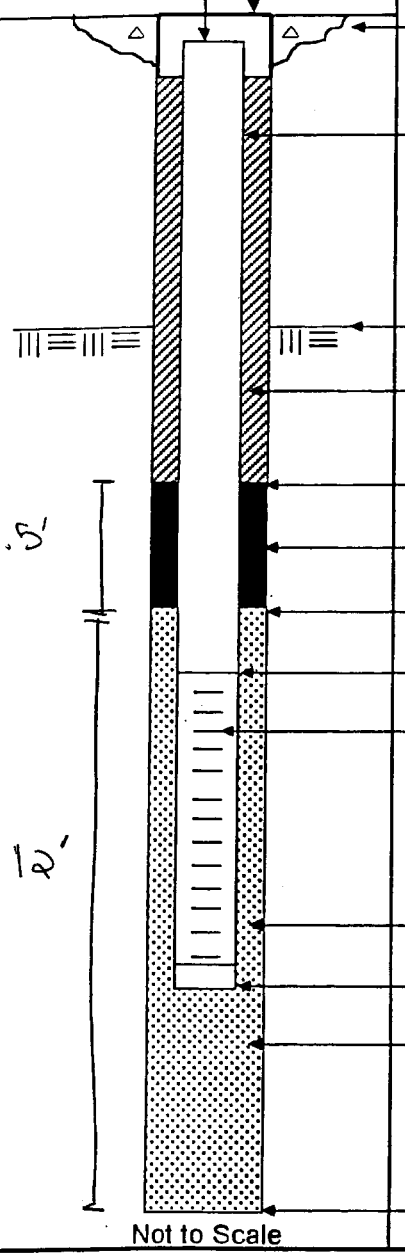

Not to Scale

Elevation / Depth of Top of Riser: /

Elevation / Height of Top of Surface Casing: Flush

I.D. of Surface Casing: 8"

Type of Surface Casing: Steel Flush Mount

Type of Surface Seal: Concrete

I.D. of Riser: 2"

Type of Riser: PVC

Borehole Diameter: 8"

Elevation / Depth Top of Rock: —/

Type of Backfill: ~~Bentonite~~ ~~Grout Portland Cement~~ Type I mix

Elevation / Depth of Seal (36") 3.0 JE ~~2.8'~~ bls

Type of Seal: Bentonite Chips

Elevation / Depth of Top of Filter Pack (3.5') 42" bls

Elevation / Depth of Top of Screen: 5'1" JE ~~4'11"~~ bls

Type of Screen: PVC

Slot Size x Length: 0.010" x 10'

I.D. of Screen: 2"

Type of Filter Pack: 20/30 sand

Standard brand \ 5.5 50 lb bags

Elevation / Depth of Bottom of Screen JE ~~14'11"~~ ~~15~~ bls 15'1" bls

Elevation / Depth of Bottom of Filter Pack: JE ~~16~~ bls 15.5' bls

Type of Backfill Below Well: 20/30 sand

Elevation / Total Depth of Borehole: 15.5' bls JE ~~16~~ bls

Tetra Tech NUS, Inc.

WELL No.: CEF-43-28DA

MONITORING WELL SHEET

PROJECT:	NAS CECIL FIELD	DRILLING Co.:	Precision	BORING No.:	—
PROJECT No.:	~~0030~~ 7895	DRILLER:	Scott Hauge	DATE COMPLETED:	4/10/99
SITE:	DAY TANK 2	DRILLING METHOD:	Hollow Stem	NORTHING:	
GEOLOGIST:	M. DALE	DEV. METHOD:	submersible	EASTING:	

Ground Elevation =

Datum:

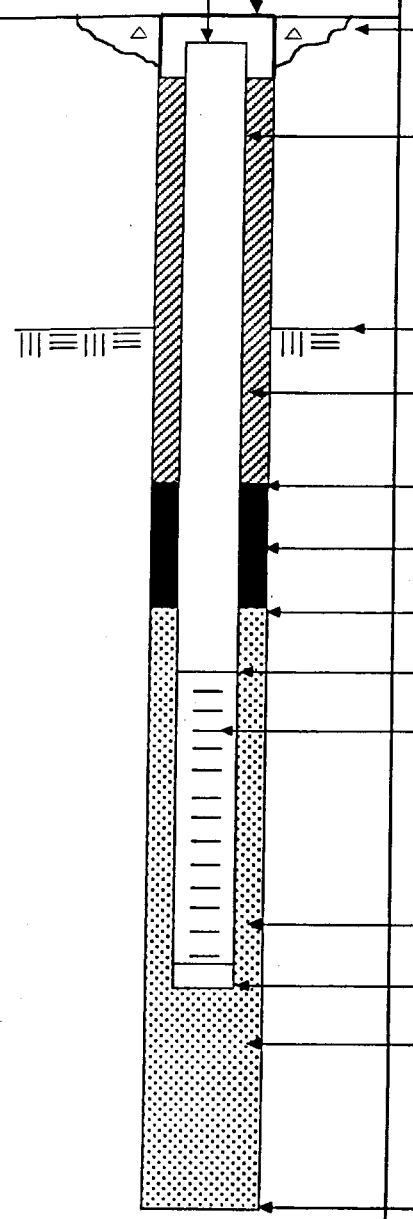

Not to Scale

Elevation / Depth of Top of Riser: /

Elevation / Height of Top of Surface Casing: /

I.D. of Surface Casing: 8 INCH

Type of Surface Casing: Steel Manhole (Flush)

Type of Surface Seal: SACKRETE CONCRETE

I.D. of Riser: 2 INCH

Type of Riser: PVC

Borehole Diameter: 8 INCH

Elevation / Depth Top of Rock: / N/A

Type of Backfill: PORTLAND Cement Type I and Bentonite Powder

Elevation / Depth of Seal: 145 FT. 11 IN.

Type of Seal: 30/65 GRADE SAND

Elevation / Depth of Top of Filter Pack: 149 FT. 8 IN.

Elevation / Depth of Top of Screen: 152.5 FT.

Type of Screen: PVC

Slot Size x Length: 0.010 IN. X 5 FT.

I.D. of Screen: 2 INCH

Type of Filter Pack: 20/30 GRADE SAND

Elevation / Depth of Bottom of Screen: 157.5 FT.

Elevation / Depth of Bottom of Filter Pack: 157.5 FT.

Type of Backfill Below Well: NATIVE SOIL

Elevation / Total Depth of Borehole: 159 FT.

Tetra Tech NUS, Inc.

WELL No.: CEF-43-47DA

MONITORING WELL SHEET

PROJECT: NAS CECIL FIELD

PROJECT No.: ~~5-0039-265~~ 7895

SITE: Day Tank 2

GEOLOGIST: Mervin Dale

DRILLING Co.: Precision

DRILLER: Scott Hauge

DRILLING METHOD: Hollow Stem

DEV. METHOD: Submersible

BORING No.: CEF-43-47DA

DATE COMPLETED: 4-9-99

NORTHING:

EASTING:

Ground Elevation =

Datum:

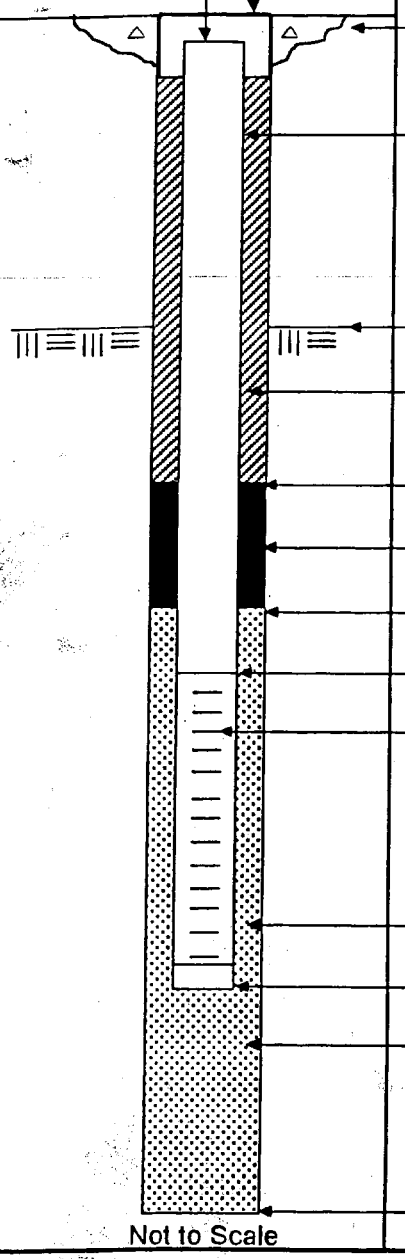

Not to Scale

Elevation / Depth of Top of Riser: /

Elevation / Height of Top of Surface Casing: Flush

I.D. of Surface Casing: 8"

Type of Surface Casing: Steel Flush Mount

Type of Surface Seal: Concrete

I.D. of Riser: 2"

Type of Riser: PVC

Borehole Diameter: 8"

Elevation / Depth Top of Rock: ¬

Type of Backfill: ~~Bar Grout~~ Portland Cement Type I and Bentonite Powder mix

Elevation / Depth of Seal: 31' bls

Type of Seal: 30\65 sand

Elevation / Depth of Top of Filter Pack: 35' bls

Elevation / Depth of Top of Screen: 38' bls

Type of Screen: PVC

Slot Size x Length: 0.010" x 5'

I.D. of Screen: 2"

Type of Filter Pack: 20\30 sand

3 50lb bags Standard Brand

Elevation / Depth of Bottom of Screen: 43 bls

Elevation / Depth of Bottom of Filter Pack: 43' bls

Type of Backfill Below Well: Native Soil

Elevation / Total Depth of Borehole: 43.5' bls

Tetra Tech NUS, Inc.

WELL No.: CEF-43-14DA

MONITORING WELL SHEET

PROJECT:	NAS CECIL FIELD	DRILLING Co.:	Precision	BORING No.:	—
PROJECT No.:	~~0039~~ 7895	DRILLER:	Scott Hange	DATE COMPLETED:	4-12-99
SITE:	DM TANK 2	DRILLING METHOD:	Mud Rotary	NORTHING:	—
GEOLOGIST:	M. DALE	DEV. METHOD:	Submersible	EASTING:	—

Ground Elevation =

Datum:

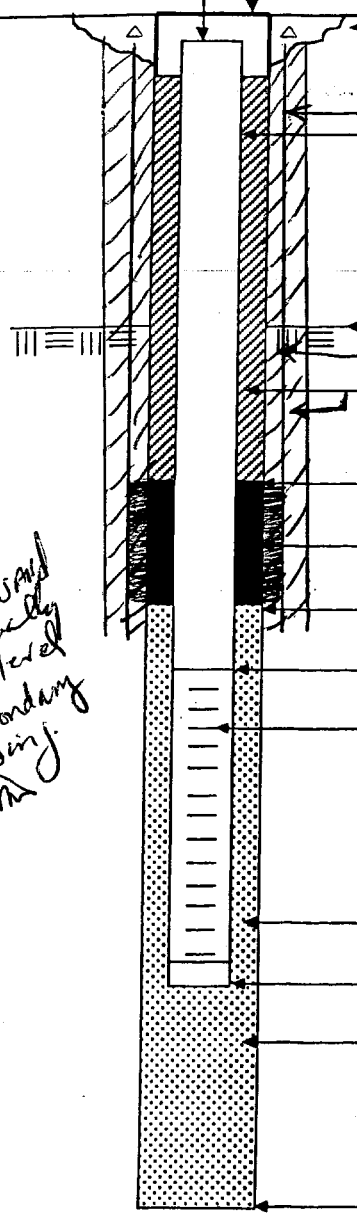

Note: chokesand is actually below level of secondary casing

Not to Scale

Elevation / Depth of Top of Riser: /

Elevation / Height of Top of Surface Casing: /

I.D. of Surface Casing: 8 inch

Type of Surface Casing: Steel Flush Mt.

Type of Surface Seal: SAKRETE CEMENT

I.D. OF RISER 6 INCH

I.D. of Riser: 2 INCH

SEC./PRI.

Type of Riser: PVC

Borehole Diameter: 5 7/8 IN / 12 IN.

~~Elevation / Depth Top of Rock:~~ MD /

Depth of Secondary Casing 165 FT.

Type of Backfill: PORTLAND CEMENT Type I And bentonite powder

Elevation / Depth of Seal: 178 FT.

Type of Seal: 30/65 CHOKE SAND

Elevation / Depth of Top of Filter Pack: 180 FT.

Elevation / Depth of Top of Screen: 182 FT.

Type of Screen: PVC

Slot Size x Length: 0.010 IN X 5 FT.

I.D. of Screen: 2 INCH

Type of Filter Pack: 20/30 SAND

Elevation / Depth of Bottom of Screen: 187 FT.

Elevation / Depth of Bottom of Filter Pack: 187 FT.

Type of Backfill Below Well: NATIVE SOIL

Elevation / Total Depth of Borehole: 187 FT.

Tetra Tech NUS, Inc.

WELL No.: CEF-342-2DB

MONITORING WELL SHEET

PROJECT:	NAS CECIL FIELD	DRILLING Co.:	Precision	BORING No.:	—
PROJECT No.:	~~0039~~ 7895	DRILLER:	Scott Hange	DATE COMPLETED:	4-12-99
SITE:	DAY TANK 2	DRILLING METHOD:	Mud Rotary	NORTHING:	—
GEOLOGIST:	M. DALE	DEV. METHOD:	Submersible	EASTING:	—

MA

Ground Elevation =

Datum:

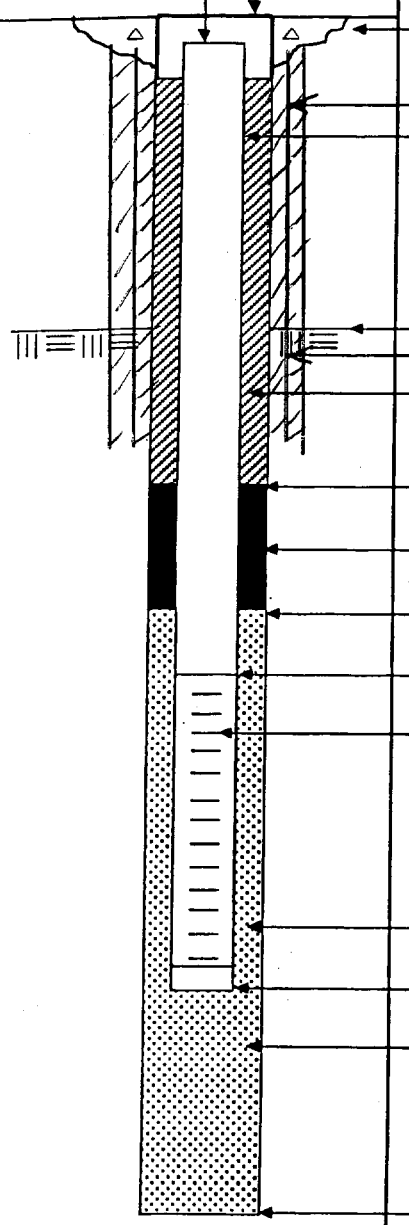

Not to Scale

Elevation / Depth of Top of Riser: 1

Elevation / Height of Top of Surface Casing: 1

I.D. of Surface Casing: 8 inch

Type of Surface Casing: Steel Flush Mt.

Type of Surface Seal: SAKRete concrete

I.D. of Riser Casing: 6 inch

I.D. of Riser: 2 inch

Type of Riser: sec./pri. PVC

Borehole Diameter: 5 7/8 IN. / 12 IN.

~~Elevation / Depth Top of Rock:~~ MD 1

Depth of Secondary Casing 65 FT.

Type of Backfill: PORTLAND Cement Type I and bentonite powder

Elevation / Depth of Seal: 177.3 FT.

Type of Seal: 30/65 choke sand

Elevation / Depth of Top of Filter Pack: 179.5 FT.

Elevation / Depth of Top of Screen: 182 FT.

Type of Screen: PVC

Slot Size x Length: 0.010 IN. X 5 FT.

I.D. of Screen: 2 INCH

Type of Filter Pack: 20/30 SAND

Elevation / Depth of Bottom of Screen: 187 FT.

Elevation / Depth of Bottom of Filter Pack: 187 FT.

Type of Backfill Below Well: NATIVE SOIL

Elevation / Total Depth of Borehole: 188 FT.

CERTIFICATE OF CONFORMANCE

Well Designation: CEF-PZ-12A
Site Name: Day Tank 2
Date Installed: 4-7-99
Project Name: Day Tank 2

Site Geologist: Mervin Dale
Drilling Company: Precision Drilling
Driller: Scott Hauge
Project Number: NJ-97895

Material	Brand/Description	Source/Supplier	Sample Collected ?
Well Casing	PVC (2" ID) SCH	Toney Drilling	No
Well Screen	PVC (2" ID, 0.010" slots, 10')	Toney Drilling	No
End Cap	Well Pt (PVC) on Bottom, locking cap on top	↓	↓
Drilling Fluid	none	None	
Drilling Fluid Additives	none	↓	
Backfill Material	none		
Annular Filter Pack	Standard 20/30	Standard Sand Jax, FL	
Bentonite Seal	Envirocplug	Wyo-Ben, Inc.	
Annular Grout ~~w/ Bentonite Grout~~	Tarmac Portland Cement Type I	Tarmac America, Inc.	
Surface Cement	SACKrete	W. R. BONSAL CO.	
Protective Casing	Steel Casing (8" ID)	Toney Drilling	
Paint	none	None	
Rod Lubricant	none	↓	
Compressor Oil	none		
			↓

To the best of my knowledge, I certify that the above described materials were used during installation of this monitoring well.

Signature of Site Geologist: Mervin L. Dale

Rev. 0
March 27, 1997

CERTIFICATE OF CONFORMANCE

Well Designation: CEF-~~43~~ 43-25A
Site Name: Day Tank 2
Date Installed: 4-7-99
Project Name: Day Tank 2

Site Geologist: Mervin Dale
Drilling Company: Precision Drilling
Driller: Scott Hawe
Project Number: NJ-47895

Material	Brand/Description	Source/Supplier	Sample Collected ?
Well Casing	PVC (2" ID) 5 ft	Toney Drilling	No
Well Screen	PVC (2" ID, 0.010" slot, 10')	Toney Drilling	No
End Cap	Well Pt (PVC) on bottom, locking cap on top	↓	↓
Drilling Fluid	none	none	↓
Drilling Fluid Additives	none	↓	↓
Backfill Material	none	↓	↓
Annular Filter Pack	Standard Brand 20/30	Standard Sand Jax, FL	↓
Bentonite Seal	Enviroplug	Wyo-Ben, Inc	↓
Annular Grout w/ ~~Bentonite Gel~~	Tarmac Portland Cement Type I	Tarmac America, Inc	↓
Surface Cement	sackrete	W.R. Bonsal Co.	↓
Protective Casing	Steel Casing (8" ID)	Toney Drilling	↓
Paint	none	none	↓
Rod Lubricant	none	↓	↓
Compressor Oil	none	↓	↓
			↓
			↓

To the best of my knowledge, I certify that the above described materials were used during installation of this monitoring well.

Signature of Site Geologist: Mervin W. Dale

CERTIFICATE OF CONFORMANCE

Well Designation: CKF-043-40A
Site Name: DAY TANK 2
Date Installed: 4/6/99
Project Name: DAY TANK 2

Site Geologist: MERVIN DALE
Drilling Company: PRECISION DRILLING
Driller: SCOTT HAUGE
Project Number: N7895.

Material	Brand/Description	Source/Supplier	Sample Collected ?
Well Casing	PVC (2 IN. DIAM.) 5 FT.	TONEY DRILLING	NO
Well Screen	PVC (2 IN. DIAM., 0.010" SLOTS, 10 FT.)	TONEY DRILLING	NO
End Cap	WELL PT (PVC) ON BOTTOM, LOCKING CAP ON TOP	↓	↓
Drilling Fluid	none	none	
Drilling Fluid Additives	none	↓	
Backfill Material	none		
Annular Filter Pack	STANDARD 20/30	STANDARD SAND JAX, FL	
Bentonite Seal	ENVIRO PLUG	WYO-BEN, INC.	
Annular Grout ~~w/ Bentonite~~ NO	TARMAC PORTLAND CEMENT TYPE I	TARMAC AMERICA, INC.	
Surface Cement	SACKRETE	W.R. BOND SAN W.	
Protective Casing	Steel Casing (8 in. DIAM.)	Toney Drilling	
Paint	none	none	
Rod Lubricant	none	↓	
Compressor Oil	none		

To the best of my knowledge, I certify that the above described materials were used during installation of this monitoring well.

Signature of Site Geologist: Mervin W. Dale

CERTIFICATE OF CONFORMANCE

Well Designation: OEF-43-41A
Site Name: Day Tank 2
Date Installed: 4-7-99
Project Name: Day Tank 2

Site Geologist: Mervin Dale
Drilling Company: Precision Drilling
Driller: Scott Hauge
Project Number: NJ 7895

Material	Brand/Description	Source/Supplier	Sample Collected ?
Well Casing	PVC (2" ID) 5ft	Toney Drilling	No
Well Screen	PVC (2" ID, 0.010" slot, 10')	Toney Drilling	No
End Cap	Well Pt (PVC) on bottom, locking cap on top		
Drilling Fluid	none	none	
Drilling Fluid Additives	none		
Backfill Material	none		
Annular Filter Pack	Standard Brand 20/30	Standard Sand Jax, FL	
Bentonite Seal	Enviroplug	Wyo-Ben, Inc	
Annular Grout w/ Bentonite Gel MD	Tarmac Portland Cement Type I	Tarmac America, Inc	
Surface Cement	SACKrete	W.R. BONSAL CO.	
Protective Casing	Steel Casing (8" ID)	Toney Drilling	
Paint	none	none	
Rod Lubricant	none		
Compressor Oil	none		

To the best of my knowledge, I certify that the above described materials were used during installation of this monitoring well.

Signature of Site Geologist: Mervin W. Dale

Rev. 0
March 27, 1997

CERTIFICATE OF CONFORMANCE

Well Designation: CEF-43-28DA
Site Name: DAY TANK 2 NAS CECIL FIELD
Date Installed: 4/10/99
Project Name: DAY TANK 2

Site Geologist: MERVIN W. DALE
Drilling Company: PRECISION Drilling
Driller: Scott Hange
Project Number: N7895

Material	Brand/Description	Source/Supplier	Sample Collected ?
Well Casing	PVC 2 IN. DIAM.	TONEY DRILLING SUPPLY	NO
Well Screen	PVC 2 IN. DIAM., 0.010" SLOTS	ORLANDO, FL	
End Cap	PVC		
Drilling Fluid	None	N/A	
Drilling Fluid Additives	None		
Backfill Material	None		
Annular Filter Pack	STANDARD SAND 20/30 grade	Standard sand, JAX, FL	
AND ~~Bentonite~~ Seal	STANDARD SAND 30/65 grade	Standard sand, JAX, FL	
Annular Grout	PORTLAND CEMENT Type I + Bentonite powder	THALMAC AND WYO-BEN, INC	
Surface Cement	SAKRETE CONCRETE MIX	W.R. BONSAL CO.	
Protective Casing	8 IN. DIAM STEEL casing	PEMCO	
Paint	None	N/A	
Rod Lubricant	None		
Compressor Oil	None		

To the best of my knowledge, I certify that the above described materials were used during installation of this monitoring well.

Signature of Site Geologist: Mervin W. Dale

Rev. 0
March 27, 1997

CERTIFICATE OF CONFORMANCE

Well Designation: CEF-43-470A
Site Name: DAY TANK 2, NAS CECIL FIELD
Date Installed: 4/9/99
Project Name: DAY TANK 2

Site Geologist: MERVIN DALE
Drilling Company: PRECISION
Driller: SCOTT HAUGK
Project Number: 7895

Material	Brand/Description	Source/Supplier	Sample Collected ?
Well Casing	PVC, 2 IN. DIAM.	TONEY DRILLING, ORL., FL	NO
Well Screen	PVC, 2 IN. DIAM., 0.010" SLOTS	↓	↑
End Cap	PVC	↓	↑
Drilling Fluid	None	none	↑
Drilling Fluid Additives	None	none	↑
Backfill Material	none	none	↑
Annular Filter Pack	Standard 20/30 grade sand	Standard brand, JAX, FL	↑
MD ~~Bentonite~~ Seal	Standard 30/65 grade sand	Standard brand, JAX, FL	↑
Annular Grout	PORTLAND Cement Type I + Bentonite powder	THERMAC INC, WYO-BEN, INC.	↑
Surface Cement	SAKRETE CONCRETE	W.R. BONSAL CO.	↑
Protective Casing	8 IN. DIAM. STEEL CASING	PEMCO	↑
Paint	none	none	↑
Rod Lubricant	none	none	↑
Compressor Oil	none	none	NO

To the best of my knowledge, I certify that the above described materials were used during installation of this monitoring well.

Signature of Site Geologist: Mervin W. Dale

Rev. 0
March 27, 1997

CERTIFICATE OF CONFORMANCE

Well Designation: CRF-~~14~~ 43-14DA
Site Name: NAS CECIL FIELD
Date Installed: 4/8, 4/9, 4/11 and 4/12/99
Project Name: DAY TANK 2

Site Geologist: MERVIN W. DALE
Drilling Company: PRECISION
Driller: SCOTT HAUGE
Project Number: N7895

Material	Brand/Description	Source/Supplier	Sample Collected ?
Well Casing	PVC, 2 INCH DIAM	Tomy Drilling, ORL., FL.	NO
Well Screen	PVC, 2IN. DIAM., 0.010 IN. SLOTS	↓	↑
End Cap	PVC		
Drilling Fluid	WATER	NAS CECIL FIELD	
Drilling Fluid Additives	BENTONITE POWDER (HIGH YIELD)	WYO-BEN AND CETCO, Billings, MT and	
Backfill Material	None	None	
Annular Filter Pack	STANDARD SAND 20/30 grade	Standard Brand, JAX, FL	
MD ~~Bentonite~~ Seal	STANDARD SAND 30/65 grade	Standard Brand, JAX, FL	
Annular Grout	PORTLAND Cement Type I, Bent. powder	TARMAC AND WYO-BEN/CETCO	
Surface Cement	SAKRETE CONCRETE	W. R. BONSAL CO.	
Protective Casing	Steel Manhole 8 IN.	PEMCO	
Paint	None	None	
Rod Lubricant	None	None	↓
Compressor Oil	None	None	NO

To the best of my knowledge, I certify that the above described materials were used during installation of this monitoring well.

Signature of Site Geologist: Mervin W. Dale

CERTIFICATE OF CONFORMANCE

Well Designation: CEF-342-2DB
Site Name: NAS CECIL FIELD
Date Installed: 4/7,8,10/99 AND 4/11/99
Project Name: DAY TANK 2

Site Geologist: MERVIN W. DALE
Drilling Company: PRECISION
Driller: SCOTT HAUGH
Project Number: N7895

Material	Brand/Description	Source/Supplier	Sample Collected ?
Well Casing	PVC, 2 INCH DIAM.	TONEY DRILLING, ORL., FL	NO
Well Screen	PVC, 2IN. DIAM., 0.010 IN. SLOTS	↓	
End Cap	PVC		
Drilling Fluid	BENTONITE POWDER (HIGH YIELD)	WYO-BEN, BILLINGS, MT	
Drilling Fluid Additives	WATER	NAS CECIL FIELD	
Backfill Material	None	None	
Annular Filter Pack	STANDARD SAND 20/30	STANDARD JAX, FL	
~~Bentonite~~ Seal	STANDARD SAND 30/65	STANDARD JAX, FL	
Annular Grout	PORTLAND CEMENT TYPE I, BENTONITE	POWDER TARMAC AND WYO-BEN	
Surface Cement	SAKRETE CONCRETE	W.R. BONSAL CO.	
Protective Casing	STEEL MANHOLE 8 IN.	PEMCO	
Paint	NONE	None	
Rod Lubricant	None	None	
Compressor Oil	None	None	
SECONDARY CASING	PVC 6 INCH DIAMETER	TONEY DRILLING	NO

To the best of my knowledge, I certify that the above described materials were used during installation of this monitoring well.

Signature of Site Geologist: Mervin W. Dale

ATTACHMENT B

MONITORING WELL DEVELOPMENT RECORDS

Tetra Tech NUS, Inc.

MONITORING WELL DEVELOPMENT RECORD

Well: ~~CEF~~ E PZ-12A
Site: Day Tank 2
Date Installed: 4-7-99
Date Developed: 4-10-99
Dev. Method: Submersible
Pump Type: Whale 921 12V D.C. Pump

Depth to Bottom (ft.): 14.71' toc
Static Water Level Before (ft.): 6.51' toc
Static Water Level After (ft.): —
Screen Length (ft.): 10'
Specific Capacity: —
Casing ID (in.): 2" PVC

Responsible Personnel: Mervin Dale
Drilling Co.: Precision Drilling
Project Name: NAS CECIL FIELD
Project Number: ~~E 0039~~ 0005
N7895

Time	Estimated Sediment Thickness (Ft.)	Cumulative Water Volume (Gal.)	Water Level Readings (Ft. below TOC)	Temperature (Degrees C)	pH	Specific Conductance (Units mS/cm)	Turbidity (NTU)	Remarks (odor, color, etc.)
1731		—	6.51	22.1	5.88	.323	954	Begin Development Lt Brn, Strong Petro odor.
1746		29.3 (112.5L)		21.9	5.43	.107	>999	
1801		58.5 (225L)		22.0	5.52	.081	582	Cloudy, Strong Petro odor. Water is slightly frothy
1816		87.8 (337.5L)		21.9	5.28	.071	434	Slightly cloudy, Petro odor is stronger
1831		117 (450L)		21.8	5.31	.070	211	
	Total Water Pumped Out = 117 Gal							End Final Water Level taken at 1836 @ 8.46' toc

1 L every 8 sec
7.5 L every 1 min
1.95 Gpm

1 L = 0.26 Gal

Tetra Tech NUS, Inc.

MONITORING WELL DEVELOPMENT RECORD

Well: CEF-43-25A
Site: Day Tank 2
Date Installed: 4-7-99
Date Developed: 4-10-99
Dev. Method: Submersible
Pump Type: Whale 921 12V D.C. Pump

Depth to Bottom (ft.): 15.3'
Static Water Level Before (ft.): 7.31' toc
Static Water Level After (ft.): 7.31' toc*
Screen Length (ft.): 10'
Specific Capacity: —
Casing ID (in.): 2" PVC

Responsible Personnel: Mervin Dale
Drilling Co.: Precision Drilling
Project Name: NAS CECIL FIELD
Project Number: ~~5-0039~~ 0605 N7895

Time	Estimated Sediment Thickness (Ft.)	Cumulative Water Volume (Gal.)	Water Level Readings (Ft. below TOC)	Temperature (Degrees C)	pH	Specific Conductance (Units mS/cm)	Turbidity (NTU)	Remarks (odor, color, etc.)
1617		—	7.31'	22.7	6.21	.430	>999	Begin Development Lt Brn, Slight petrol/sulfur odor
1632		18.0 (69.3L)		22.4	6.20	.195	566	Slightly Cloudy, slight petro or sulfur odor
1647		36.0 (138.6L)		22.5	6.23	.197	254	↓
1702		55.0 (207.9L)		21.9	6.22	.208	146	Clear to slightly cloudy, slight petrol/sulfur odor
1717		72.1 (277.2L)	7.31*	22.2	6.29	.213	101	↓
								End
								* Final Water Level was taken at 1742

1 L every 13 sec
4.62L every 1 min
1.2 Gpm

1 L = 0.26 Gal

Tetra Tech NUS, Inc.

MONITORING WELL DEVELOPMENT RECORD

Well: CEF-43-40A
Site: Day Tank 2
Date Installed: 4-6-99
Date Developed: 4-10-99
Dev. Method: Submersible
Pump Type: Whale 921 12V D.C. Pump

Depth to Bottom (ft.): 15.1' toc
Static Water Level Before (ft.): 7.74' toc
Static Water Level After (ft.): 7.95' toc*
Screen Length (ft.): 10'
Specific Capacity: —
Casing ID (in.): 2" PVC

Responsible Personnel: Mervin Dale
Drilling Co.: Precision Drilling
Project Name: NAS CECIL FIELD
Project Number: ~~F-0032~~ 0C05 N7895

Time	Estimated Sediment Thickness (Ft.)	Cumulative Water Volume (Gal.)	Water Level Readings (Ft. below TOC)	Temperature (Degrees C)	pH	Specific Conductance (Units mS/cm)	Turbidity (NTU)	Remarks (odor, color, etc.)
1437	.1-.2'	—	7.74'	23.60	6.32	.725	>999	~~Begin Development~~ No odor, lt. Br.
1452		18 (68.3L)	~10.5' (WL indicator doesn't fit w/ submersible in well)	22.0	5.78	.149	>999	↓
1507		36 (136.6L)		21.9	5.65	.086	276	No odor, Clear to cloudy
1522		55 (207.9L)		21.8	5.66	.080	284	↓
1537		72.1 (277.2L)	7.95'*	22.0	5.55	.075	143	No odor, Clear
	Total Water Pumped out = 72.1 Gal							End

* Final Water Level taken at 1549 ≈ 7.95' toc

Flow Rate: 1L every 13 sec
4.62L every 1 min

1L = 0.26 gal

Tetra Tech NUS, Inc.

MONITORING WELL DEVELOPMENT RECORD

Well: CEF-43-41A
Site: Day Tank 2
Date Installed: 4-7-99
Date Developed: 4-10-99
Dev. Method: Submersible
Pump Type: Whale 921 12V D.C. Pump

Depth to Bottom (ft.): 14.60' toc
Static Water Level Before (ft.): 8.40' toc
Static Water Level After (ft.): 8.54* toc
Screen Length (ft.): 10'
Specific Capacity: —
Casing ID (in.): 2" PVC

Responsible Personnel: Mervin Dale
Drilling Co.: Precision Drilling
Project Name: NAS CECIL FIELD
Project Number: ~~S-0039~~ 065
N7895

Time	Estimated Sediment Thickness (Ft.)	Cumulative Water Volume (Gal.)	Water Level Readings (Ft. below TOC)	Temperature (Degrees C)	pH	Specific Conductance (Units mS/cm)	Turbidity (NTU)	Remarks (odor, color, etc.)
								Begin Development
1533	~.5'	—	8.40'	22.9	6.30	.521	>999	Slight petro odor, ~~sh~~ product sheen, Lt. Bn.
1548		21.3 (81.75L)		23.3	6.27	.413	>999	↓
1603		42.5 (163.5L)		22.4	6.31	.464	>999	↓
1618		63.8 (245.3L)		23.0	6.22	.402	250	Slightly cloudy, slight petro odor
1633		85.0 (327.1L)	8.54'*	23.1	6.24	~~.3~~.401	130	↓
								End *Final Water Level was taken at 1659 ~~at~~ 8.54' toc
		Total Water Pumped out = 85.0 Gal						

1 L every 11 sec 1 L = 0.26 Gal
5.45 L every 1 min

Tetra Tech NUS, Inc.

MONITORING WELL DEVELOPMENT RECORD

Well: CEF-43-28DA
Site: Day Tank 2
Date Installed: 4-10-99
Date Developed: 4-11-99
Dev. Method: Submersible
Pump Type: Whale 921 12V DC Pump

Depth to Bottom (ft.): —
Static Water Level Before (ft.): 7.81 (m)
Static Water Level After (ft.): —
Screen Length (ft.): ~~5"~~ 5 Feet
Specific Capacity: —
Casing ID (in.): 2" PVC

Responsible Personnel: Mervin Dale
Drilling Co.: Precision Drilling
Project Name: NAS CECIL FIELD
Project Number: ~~X0039~~ 0063

Time	Estimated Sediment Thickness (Ft.)	Cumulative Water Volume (Gal.)	Water Level Readings (Ft. below TOC)	Temperature (Degrees C)	pH	Specific Conductance (Units mS/cm)	Turbidity (NTU)	Remarks (odor, color, etc.)
1028		—	7.81	23.7	6.09	.213	>999	Begin Development Lt. tan in color, no odor
1043		21.3 (81.8L)		23.3	5.54	.096	>999	
1058		42.5 (163.6L)		23.2	5.57	.080	695	Slightly Cloudy, no odor
1113		63.8 (245.4L)		23.4	5.55	.076	453	
1128		85.1 (327.2L)	8.66	23.5	5.41	.072	359	
		Total Water Pumped Out = 85.1 Gal						End

1L per 11sec
5.45L per min

1L = 0.26 Gal

Tetra Tech NUS, Inc.

MONITORING WELL DEVELOPMENT RECORD

Well: CEF-43-47DA
Site: Day Tank 2
Date Installed: 4-9-99
Date Developed: 4-11-99
Dev. Method: Submersible
Pump Type: Whale 921 12V D.C Pump

Depth to Bottom (ft.): 43.54
Static Water Level Before (ft.): 8.86' toc
Static Water Level After (ft.): 8.91' toc*
Screen Length (ft.): 5'
Specific Capacity: —
Casing ID (in.): 2" PVC

Responsible Personnel: Mervin Dale
Drilling Co.: Precision
Project Name: NAS CECIL FIELD
Project Number: ~~F0039 005~~ N7895

Time	Estimated Sediment Thickness (Ft.)	Cumulative Water Volume (Gal.)	Water Level Readings (Ft. below TOC)	Temperature (Degrees C)	pH	Specific Conductance (Units mS/cm)	Turbidity (NTU)	Remarks (odor, color, etc.)
0854		—	8.86'	23.2	5.94	.221	>999	Begin Development Water is Lt. Br., no odor
0916		38.3 (147.4L)		23.0	4.54	.149	78760	↓
0931		64.5 (247.9L)		23.0	5.06	.069	202	Slightly cloudy, no odor
0946		90.6 (348.4L)		22.9	4.96	.064	130	↓
~~1001~~		~~116.7 (448.9L)~~						
0954		104.5 (402.0L)	8.91' toc*	22.9	4.90	.065	205	↓ *Final Water Level taken at 1013 ↓ 8.91' toc
	Total Water Pumped out = 104.5 Gal							End

1 L every 4 sec 1L = 0.26 Gal
6.7L per min
1.73 Gpm

MONITORING WELL DEVELOPMENT RECORD

Well: CEF-43-14DA
Site: NAS CECIL FIELD
Date Installed: 4/8, 4/9, 4/11, 4/12/99
Date Developed: 4/14/99
Dev. Method: Pumping
Pump Type: Submersible

Depth to Bottom (ft.): 85.75
Static Water Level Before (ft.): 9.72
Static Water Level After (ft.): 10.62
Screen Length (ft.): 5
Specific Capacity: N/A
Casing ID (in.): 2

Responsible Personnel: MERV DALE
Drilling Co.: PRECISION
Project Name: DAY TANK 2
Project Number: N7895

Time	Estimated Sediment Thickness (Ft.)	Cumulative Water Volume (Gal.)	Water Level Readings (Ft. below TOC)	Temperature (Degrees C)	pH	Specific Conductance (Units mS/cm)	Turbidity (NTU)	Remarks (odor, color, etc.)
1020	1.5	0	9.72	24.1	9.00	0.207	40	clear. RAN for 5 MIN./5 GAL.
1029	—	5	—	24.8	8.11	0.425	775	cloudy (very) (flow rate
1046	—	16	—	23.7	7.60	0.459	847	cloudy is variable
1056	—	32	—	23.4	7.25	0.460	359	clearing 0.63 - 1.6 GPM)
1106	—	48	—	23.3	7.18	0.452	69	clear, some fine grains of
1116	—	64	—	23.3	7.15	0.447	16	sand coming up.
1131	—	80	—	23.6	7.13	0.444	4	—
1146	—	96	—	23.5	7.14	0.443	0	clear! stop development.
1201	0.35	—	10.62	—	—	—	—	

Tetra Tech NUS, Inc.

MONITORING WELL DEVELOPMENT RECORD

Well: CEF-342-2DB
Site: NAS CECIL FIELD JAY TANK 2
Date Installed: 4/7, 4/8, 4/10, 4/11/99
Date Developed: 4/12/99
Dev. Method: Pumping / Surge Block
Pump Type: Submersible

Depth to Bottom (ft.): 86.5
Static Water Level Before (ft.): 8.82
Static Water Level After (ft.): 8.95
Screen Length (ft.): 5
Specific Capacity: none taken
Casing ID (in.): 2

Responsible Personnel: Mervin Dare
Drilling Co.: Precision
Project Name: NAS CECIL FIELD
Project Number: ~~0039~~ 7895 MD

Time	Estimated Sediment Thickness (Ft.)	Cumulative Water Volume (Gal.)	Water Level Readings (Ft. below TOC)	Temperature (Degrees C)	pH	Specific Conductance (Units mS/cm)	Turbidity (NTU)	Remarks (odor, color, etc.)
1230	—	—	8.82	—	—	—	—	Cloudy with mud.
1325	—	66	—	24.8	7.38	0.473	53	can't get probe past pump
1348	—	93.6	—	23.6	7.39	0.462	9	and tubing
								1.2 GPM water clear
1350								Stop - insert surge
								Block to 80FT.
								Surge for 3 minutes
1419								restart submersible
								initial water is cldy.
1428	—	115	—	23.8	7.63	0.453	462	2.4 GPM (truck is running
1433	—	127	—	23.5	7.12	0.448	13	so pump spd jumped up).
1438	—	139	~~[illegible]~~ MD	23.4	7.10	0.43049	6	Stop
1450	0.5	—	8.95	—	—	— MD	—	

ATTACHMENT C

GROUNDWATER ANALYTICAL REPORT

SL SAVANNAH LABORATORIES
& ENVIRONMENTAL SERVICES, INC.

5102 LaRoche Avenue • Savannah, GA 31404 • (912) 354-7858 • Fax (912) 352-0165

Date - 04/29/99 Electronic Data Deliverable Form
Time - 05:20PM Form 62347

** This message contains confidential information intended only for the use of the person named herein. If the reader of this transmission is not the intended recipient, you are notified that any use, distribution, dissemination, or copying of this message is strictly prohibited. **

SL Division : Savannah, Georgia
SL Project Manager : Angie Stewart

Client Code : BR-JAX/
Customer : Tetra Tech NUS, Inc.
Contact : Mr. Sam Pratt
Contact Phone : 9042810400

EDD Description : PITT-7895-P99153/CTO#65
EDD created by : John S. Cash
LIMS EDD Program used : BROWN.AND.ROOT

This EDD contains the following 3 PC data file(s):

File Name	File Description
TTKW08.DBF	dBASE III file
TTKW08.XLS	MS Excel file
README.TXT	EDD description file

This EDD was created using the following 2 order(s) from the SL LIMS:

Order Number	Recd Date	Rept Date	Project Name
S912424	04/16/99	04/29/99	PITT-7895-P99153/CTO#65
S9TTKW08	04/16/99	04/29/99	PITT-7895-P99153/CTO#65

If you have any questions or problems with this EDD please call
Angie Stewart at 912/354-7858.

SL SAVANNAH LABORATORIES
& ENVIRONMENTAL SERVICES, INC.

5102 LaRoche Avenue • Savannah, GA 31404 • (912) 354-7858 • Fax (912) 352-0165

Date - 04/29/99
Time - 05:20PM

Electronic Data Deliverable Form

** This message contains confidential information intended only for the use of the person named herein. If the reader of this transmission is not the intended recipient, you are notified that any use, distribution, dissemination, or copying of this message is strictly prohibited. **

SL Division : Savannah, Georgia
SL Project Manager : Angie Stewart

Client Code : BR-JAX/
Customer : Tetra Tech NUS, Inc.
Contact : Mr. Sam Pratt
Contact Phone : 9042810400

EDD Description : PITT-7895-P99153/CTO#65
EDD created by : John S. Cash
LIMS EDD Program used : BROWN.AND.ROOT

This EDD contains the following 3 PC data file(s):

File Name	File Description
TTKW08.DBF	dBASE III file
TTKW08.XLS	MS Excel file
README.TXT	EDD description file

This EDD was created using the following 2 order(s) from the SL LIMS:

Order Number	Recd Date	Rept Date	Project Name
S912424	04/16/99	04/29/99	PITT-7895-P99153/CTO#65
S9TTKW08	04/16/99	04/29/99	PITT-7895-P99153/CTO#65

If you have any questions or problems with this EDD please call
Angie Stewart at 912/354-7858.

SL SAVANNAH LABORATORIES
& ENVIRONMENTAL SERVICES, INC.

5102 LaRoche Avenue • Savannah, GA 31404 • (912) 354-7858 • Fax (912) 352-0165

Date - 04/29/99 Electronic Data Deliverable Form
Time - 05:20PM Form 62347

** This message contains confidential information intended only for the use of the person named herein. If the reader of this transmission is not the intended recipient, you are notified that any use, distribution, dissemination, or copying of this message is strictly prohibited. **

SL Division : Savannah, Georgia
SL Project Manager : Angie Stewart

Client Code : BR-JAX/
Customer : Tetra Tech NUS, Inc.
Contact : Mr. Sam Pratt
Contact Phone : 9042810400

EDD Description : PITT-7895-P99153/CTO#65
EDD created by : John S. Cash
LIMS EDD Program used : BROWN.AND.ROOT

This EDD contains the following 3 PC data file(s):

File Name	File Description
TTKW08.DBF	dBASE III file
TTKW08.XLS	MS Excel file
README.TXT	EDD description file

This EDD was created using the following 2 order(s) from the SL LIMS:

Order Number	Recd Date	Rept Date	Project Name
S912424	04/16/99	04/29/99	PITT-7895-P99153/CTO#65
S9TTKW08	04/16/99	04/29/99	PITT-7895-P99153/CTO#65

If you have any questions or problems with this EDD please call
Angie Stewart at 912/354-7858.

SL SAVANNAH LABORATORIES & ENVIRONMENTAL SERVICES, INC.

5102 LaRoche Avenue • Savannah, GA 31404 • (912) 354-7858 • Fax (912) 352-0165

LOG NO: S9-12424
Received: 16 APR 99
Reported: 29 APR 99

Mr. Sam Pratt
Tetra Tech NUS, Inc.
7018 A.C. Skinner Parkway Suite 250
Jacksonville, FL 32256

Client PO. No.: N0013-P99027

Requisition: N7895
Contract No.: N62467-94-D-0888
Project: PITT-7895-P99153/CTO#65
Sampled By: Client
Code: 154290429

REPORT OF RESULTS

LOG NO	SAMPLE DESCRIPTION , LIQUID SAMPLES	DATE/ TIME SAMPLED	SDG#
12424-1	PZ-12A N7895	04-15-99/1150	TTKW08
12424-2	CEF-43-14DA	04-15-99/1640	TTKW08
12424-3	CEF-43-25A	04-15-99/1205	TTKW08
12424-4	CEF-43-28DA	04-15-99/1452	TTKW08
12424-5	CEF-43-40A	04-15-99/1441	TTKW08

PARAMETER	12424-1	12424-2	12424-3	12424-4	12424-5
Halogenated and Aromatic Volatiles (8021)					
Benzene, ug/l	96	<1.0	<1.0	<1.0	<5.0
Chlorobenzene, ug/l	<5.0	<1.0	<1.0	<1.0	<5.0
1,2-Dichlorobenzene, ug/l	<5.0	<1.0	<1.0	<1.0	<5.0
1,3-Dichlorobenzene, ug/l	<5.0	<1.0	<1.0	<1.0	<5.0
1,4-Dichlorobenzene, ug/l	<5.0	<1.0	<1.0	<1.0	<5.0
Ethylbenzene, ug/l	110	<1.0	7.4	<1.0	42
Toluene, ug/l	13	<1.0	1.8	<1.0	<5.0
o-Xylene, ug/l	190	<1.0	<1.0	<1.0	74
m&p-Xylene, ug/l	320	<1.0	1.3	<1.0	120
Methyl tert-butyl ether (MTBE), ug/l	<50	<10	<10	<10	<50
Surrogate - a,a,a-Trifluorotoluene	160 %	110 %	110 %	107 %	110 %
Method Number	8021	8021	8021	8021	8021
Analysis Date	04.26.99	04.26.99	04.26.99	04.26.99	04.27.99
Batch ID	1B0426	1B0426	1B0426	1B0426	1B0427
Dilution Factor	5.0	1.0	1.0	1.0	5.0

SL SAVANNAH LABORATORIES
& ENVIRONMENTAL SERVICES, INC.

5102 LaRoche Avenue • Savannah, GA 31404 • (912) 354-7858 • Fax (912) 352-0165

LOG NO: S9-12424
Received: 16 APR 99
Reported: 29 APR 99

Mr. Sam Pratt
Tetra Tech NUS, Inc.
7018 A.C. Skinner Parkway Suite 250
Jacksonville, FL 32256

Client PO. No.: N0013-P99027

Requisition: N7895
Contract No.: N62467-94-D-0888
Project: PITT-7895-P99153/CTO#65
Sampled By: Client
Code: 154290429

REPORT OF RESULTS

LOG NO	SAMPLE DESCRIPTION , LIQUID SAMPLES	DATE/ TIME SAMPLED	SDG#
12424-1	PZ-12A N7895	04-15-99/1150	TTKW08
12424-2	CEF-43-14DA	04-15-99/1640	TTKW08
12424-3	CEF-43-25A	04-15-99/1205	TTKW08
12424-4	CEF-43-28DA	04-15-99/1452	TTKW08
12424-5	CEF-43-40A	04-15-99/1441	TTKW08

PARAMETER	12424-1	12424-2	12424-3	12424-4	12424-5
Polynuclear Aromatics (8310)					
Acenaphthene, ug/l	<1.0	<1.0	<1.0	<1.0	<1.0
Acenaphthylene, ug/l	<1.0	<1.0	<1.0	<1.0	<1.0
Anthracene, ug/l	<0.20	<0.20	<0.20	<0.20	<0.20
Benzo(a)anthracene, ug/l	<0.20	<0.20	<0.20	<0.20	<0.20
Benzo(a)pyrene, ug/l	<0.20	<0.20	<0.20	<0.20	<0.20
Benzo(b)fluoranthene, ug/l	<0.20	<0.20	<0.20	<0.20	<0.20
Benzo(g,h,i)perylene, ug/l	<0.50	<0.50	<0.50	<0.50	<0.50
Benzo(k)fluoranthene, ug/l	<0.20	<0.20	<0.20	<0.20	<0.20
Chrysene, ug/l	<0.20	<0.20	<0.20	<0.20	<0.20
Dibenzo(a,h)anthracene, ug/l	<0.20	<0.20	<0.20	<0.20	<0.20
Fluoranthene, ug/l	<0.50	<0.50	<0.50	<0.50	<0.50
Fluorene, ug/l	<0.50	<0.50	<0.50	<0.50	<0.50
Indeno(1,2,3-cd)pyrene, ug/l	<0.20	<0.20	<0.20	<0.20	<0.20
Naphthalene, ug/l	14	<1.0	<1.0	<1.0	<1.0
Phenanthrene, ug/l	<0.20	<0.20	<0.20	<0.20	<0.20
Pyrene, ug/l	<0.50	<0.50	<0.50	<0.50	<0.50
1-Methylnaphthalene, ug/l	9.1	<1.0	<1.0	<1.0	<1.0
2-Methylnaphthalene, ug/l	4.2	<1.0	<1.0	<1.0	<1.0

SL SAVANNAH LABORATORIES & ENVIRONMENTAL SERVICES, INC.

5102 LaRoche Avenue • Savannah, GA 31404 • (912) 354-7858 • Fax (912) 352-0165

LOG NO: S9-12424
Received: 16 APR 99
Reported: 29 APR 99

Mr. Sam Pratt
Tetra Tech NUS, Inc.
7018 A.C. Skinner Parkway Suite 250
Jacksonville, FL 32256

Client PO. No.: N0013-P99027

Requisition: N7895
Contract No.: N62467-94-D-0888
Project: PITT-7895-P99153/CTO#65
Sampled By: Client
Code: 154290429

REPORT OF RESULTS

LOG NO	SAMPLE DESCRIPTION , LIQUID SAMPLES	DATE/ TIME SAMPLED	SDG#
12424-1	PZ-12A N7895	04-15-99/1150	TTKW08
12424-2	CEF-43-14DA	04-15-99/1640	TTKW08
12424-3	CEF-43-25A	04-15-99/1205	TTKW08
12424-4	CEF-43-28DA	04-15-99/1452	TTKW08
12424-5	CEF-43-40A	04-15-99/1441	TTKW08

PARAMETER	12424-1	12424-2	12424-3	12424-4	12424-5
Surrogate - Terphenyl - d14	56 %	50 %	74 %	46 %	64 %
Prep Date	04.21.99	04.21.99	04.21.99	04.21.99	04.21.99
Prep Method	3520	3520	3520	3520	3520
Analysis Date	04.26.99	04.26.99	04.26.99	04.26.99	04.26.99
Batch ID	0421K	0421K	0421K	0421K	0421K
Dilution Factor	1.0	1.0	1.0	1.0	1.0

SL SAVANNAH LABORATORIES & ENVIRONMENTAL SERVICES, INC.

5102 LaRoche Avenue • Savannah, GA 31404 • (912) 354-7858 • Fax (912) 352-0165

LOG NO: S9-12424
Received: 16 APR 99
Reported: 29 APR 99

Mr. Sam Pratt
Tetra Tech NUS, Inc.
7018 A.C. Skinner Parkway Suite 250
Jacksonville, FL 32256

Client PO. No.: N0013-P99027

Requisition: N7895
Contract No.: N62467-94-D-0888
Project: PITT-7895-P99153/CTO#65
Sampled By: Client
Code: 154290429

REPORT OF RESULTS

LOG NO	SAMPLE DESCRIPTION , LIQUID SAMPLES	DATE/ TIME SAMPLED	SDG#
12424-6	CEF-43-41A	04-15-99/1437	TTKW08
12424-6-DL	CEF-43-41A	04-15-99/1437	TTKW08
12424-7	CEF-43-47DA	04-15-99/1416	TTKW08
12424-8	CEF-342-2DB	04-15-99/1400	TTKW08
12424-9	CEF-43-DU01	04-15-99/0000	TTKW08

PARAMETER	12424-6	12424-6-DL	12424-7	12424-8	12424-9
Halogenated and Aromatic Volatiles (8021)					
Benzene, ug/l	<5.0	---	<1.0	<1.0	3.2
Chlorobenzene, ug/l	<5.0	---	<1.0	<1.0	<1.0
1,2-Dichlorobenzene, ug/l	<5.0	---	<1.0	<1.0	<1.0
1,3-Dichlorobenzene, ug/l	<5.0	---	<1.0	<1.0	<1.0
1,4-Dichlorobenzene, ug/l	<5.0	---	<1.0	<1.0	<1.0
Ethylbenzene, ug/l	100	---	<1.0	<1.0	<1.0
Toluene, ug/l	<5.0	---	<1.0	<1.0	<1.0
o-Xylene, ug/l	7.3	---	<1.0	<1.0	<1.0
m&p-Xylene, ug/l	210	---	<1.0	1.3	<1.0
Methyl tert-butyl ether (MTBE), ug/l	<50	---	<10	<10	<10
Surrogate - a,a,a-Trifluorotoluene	120 %	---	107 %	100 %	113 %
Method Number	8021	---	8021	8021	8021
Analysis Date	04.27.99	---	04.26.99	04.26.99	04.27.99
Batch ID	1B0427	---	1B0426	1B0426	1B0427
Dilution Factor	5.0	---	1.0	1.0	1.0

SL SAVANNAH LABORATORIES & ENVIRONMENTAL SERVICES, INC.

5102 LaRoche Avenue • Savannah, GA 31404 • (912) 354-7858 • Fax (912) 352-0165

LOG NO: S9-12424
Received: 16 APR 99
Reported: 29 APR 99

Mr. Sam Pratt
Tetra Tech NUS, Inc.
7018 A.C. Skinner Parkway Suite 250
Jacksonville, FL 32256

Client PO. No.: N0013-P99027

Requisition: N7895
Contract No.: N62467-94-D-0888
Project: PITT-7895-P99153/CTO#65
Sampled By: Client
Code: 154290429

REPORT OF RESULTS

LOG NO	SAMPLE DESCRIPTION , LIQUID SAMPLES	DATE/ TIME SAMPLED	SDG#
12424-6	CEF-43-41A	04-15-99/1437	TTKW08
12424-6-DL	CEF-43-41A	04-15-99/1437	TTKW08
12424-7	CEF-43-47DA	04-15-99/1416	TTKW08
12424-8	CEF-342-2DB	04-15-99/1400	TTKW08
12424-9	CEF-43-DU01	04-15-99/0000	TTKW08

PARAMETER	12424-6	12424-6-DL	12424-7	12424-8	12424-9
Polynuclear Aromatics (8310)					
Acenaphthene, ug/l	21 *F47	27 *F47	<1.0	<1.0	<1.0
Acenaphthylene, ug/l	6.3	<10	<1.0	<1.0	<1.0
Anthracene, ug/l	<0.20	<2.0	<0.20	<0.20	<0.20
Benzo(a)anthracene, ug/l	<0.20	<2.0	<0.20	<0.20	<0.20
Benzo(a)pyrene, ug/l	<0.20	<2.0	<0.20	<0.20	<0.20
Benzo(b)fluoranthene, ug/l	<0.20	<2.0	<0.20	<0.20	<0.20
Benzo(g,h,i)perylene, ug/l	<0.50	<5.0	<0.50	<0.50	<0.50
Benzo(k)fluoranthene, ug/l	<0.20	<2.0	<0.20	<0.20	<0.20
Chrysene, ug/l	<0.20	<2.0	<0.20	<0.20	<0.20
Dibenzo(a,h)anthracene, ug/l	<0.20	<2.0	<0.20	<0.20	<0.20
Fluoranthene, ug/l	<0.50	<5.0	<0.50	<0.50	<0.50
Fluorene, ug/l	0.69X	<5.0	<0.50	<0.50	<0.50
Indeno(1,2,3-cd)pyrene, ug/l	<0.20	<2.0	<0.20	<0.20	<0.20
Naphthalene, ug/l	20	20	<1.0	<1.0	<1.0
Phenanthrene, ug/l	0.35X	<2.0	<0.20	<0.20	<0.20
Pyrene, ug/l	<0.50	<5.0	<0.50	<0.50	<0.50
1-Methylnaphthalene, ug/l	67E	83	<1.0	<1.0	<1.0
2-Methylnaphthalene, ug/l	89E	110	<1.0	<1.0	<1.0

SL SAVANNAH LABORATORIES
& ENVIRONMENTAL SERVICES, INC.

5102 LaRoche Avenue • Savannah, GA 31404 • (912) 354-7858 • Fax (912) 352-0165

LOG NO: S9-12424
Received: 16 APR 99
Reported: 29 APR 99

Mr. Sam Pratt
Tetra Tech NUS, Inc.
7018 A.C. Skinner Parkway Suite 250
Jacksonville, FL 32256

Client PO. No.: N0013-P99027

Requisition: N7895
Contract No.: N62467-94-D-0888
Project: PITT-7895-P99153/CTO#65
Sampled By: Client
Code: 154290429

REPORT OF RESULTS

LOG NO	SAMPLE DESCRIPTION , LIQUID SAMPLES	DATE/ TIME SAMPLED	SDG#
12424-6	CEF-43-41A	04-15-99/1437	TTKW08
12424-6-DL	CEF-43-41A	04-15-99/1437	TTKW08
12424-7	CEF-43-47DA	04-15-99/1416	TTKW08
12424-8	CEF-342-2DB	04-15-99/1400	TTKW08
12424-9	CEF-43-DU01	04-15-99/0000	TTKW08

PARAMETER	12424-6	12424-6-DL	12424-7	12424-8	12424-9
Surrogate - Terphenyl - d14	58 %	62 %	62 %	65 %	38 %
Prep Date	04.21.99	04.21.99	04.21.99	04.21.99	04.21.99
Prep Method	3520	3520	3520	3520	3520
Analysis Date	04.26.99	04.26.99	04.26.99	04.26.99	04.26.99
Batch ID	0421K	0421K	0421K	0421K	0421K
Dilution Factor	1.0	10.0	1.0	1.0	1.0

SL SAVANNAH LABORATORIES & ENVIRONMENTAL SERVICES, INC.

5102 LaRoche Avenue • Savannah, GA 31404 • (912) 354-7858 • Fax (912) 352-0165

LOG NO: S9-12424
Received: 16 APR 99
Reported: 29 APR 99

Mr. Sam Pratt
Tetra Tech NUS, Inc.
7018 A.C. Skinner Parkway Suite 250
Jacksonville, FL 32256

Client PO. No.: N0013-P99027

Requisition: N7895
Contract No.: N62467-94-D-0888
Project: PITT-7895-P99153/CTO#65
Sampled By: Client
Code: 154290429

REPORT OF RESULTS

LOG NO	SAMPLE DESCRIPTION , LIQUID SAMPLES	DATE/ TIME SAMPLED	SDG#
12424-10	TRIP BLANK 913F		TTKW08

PARAMETER	12424-10
Halogenated and Aromatic Volatiles (8021)	
Benzene, ug/l	<1.0
Chlorobenzene, ug/l	<1.0
1,2-Dichlorobenzene, ug/l	<1.0
1,3-Dichlorobenzene, ug/l	<1.0
1,4-Dichlorobenzene, ug/l	<1.0
Ethylbenzene, ug/l	<1.0
Toluene, ug/l	<1.0
o-Xylene, ug/l	<1.0
m&p-Xylene, ug/l	<1.0
Surrogate - a,a,a-Trifluorotoluene	107 %
Batch ID	1B0427
Dilution factor	1.0
Date Extracted	---
Date Analyzed	04.27.99
Method Number	8021
Methyl tert-butyl ether (MTBE), ug/l	<10
Analysis Date	04.27.99
Batch ID	1B0427
Dilution Factor	1.0

SL SAVANNAH LABORATORIES & ENVIRONMENTAL SERVICES, INC.

5102 LaRoche Avenue • Savannah, GA 31404 • (912) 354-7858 • Fax (912) 352-0165

LOG NO: S9-12424
Received: 16 APR 99
Reported: 29 APR 99

Mr. Sam Pratt
Tetra Tech NUS, Inc.
7018 A.C. Skinner Parkway Suite 250
Jacksonville, FL 32256

Client PO. No.: N0013-P99027

Requisition: N7895
Contract No.: N62467-94-D-0888
Project: PITT-7895-P99153/CTO#65
Sampled By: Client
Code: 154290429

REPORT OF RESULTS

LOG NO	SAMPLE	DATE/ TIME SAMPLED	SDG#
12424-10	TRIP BLANK 913F		TTKW08

PARAMETER	12424-10

Methods: EPA SW-846, Update III.

E = Result is above the upper QC limit.

X = Identification of target analytes using GC methodology is based on retention time. Although two dissimilar GC columns confirmed the presence of the target analyte in the sample, relative percent difference is >40%. Thus, reviewer discretion should be employed during data review and interpretation of results for this target compound.

*F47 = Due to a coeluting matrix interference on one of the GC columns, confirmation of this compound was not feasible. Thus, the concentration reported was based on quantitation from a single column. The sample concentration was too low to be confirmed by GC/MS.

Angie Stewart, Project Manager

Final Page Of Report

SL SAVANNAH LABORATORIES
& ENVIRONMENTAL SERVICES, INC.

5102 LaRoche Avenue • Savannah, GA 31404 • (912) 354-7858 • Fax (912) 352-0165

CASE NARRATIVE

SDG# TTKW08
SL PROJECT#s S912424

Halogenated and Aromatic Volatiles (8021) Fraction

The following samples were analyzed according to SW-846 Method 8021.

SL#	SAMPLE DESCRIPTION	MATRIX
S912424*1	PZ-12A N7895	Liquid
S912424*2	CEF-43-14DA	Liquid
S912424*3	CEF-43-25A	Liquid
S912424*4	CEF-43-28DA	Liquid
S912424*5	CEF-43-40A	Liquid
S912424*6	CEF-43-41A	Liquid
S912424*7	CEF-43-47DA	Liquid
S912424*8	CEF-342-2DB	Liquid
S912424*9	CEF-43-DU01	Liquid
S912424*10	TRIP BLANK 913F	Liquid

A lab control standard was analyzed for quality control.

Due to the abundance of target analytes, samples S912424-1, S912424-5, and S912424-6 required analysis at dilutions of 1:5.

SL *SAVANNAH LABORATORIES*
& ENVIRONMENTAL SERVICES, INC.

5102 LaRoche Avenue • Savannah, GA 31404 • (912) 354-7858 • Fax (912) 352-0165

CASE NARRATIVE

SDG# TTKW08
SL PROJECT#s S912424

Polynuclear Aromatics (8310) Fraction

The following samples were analyzed according to SW-846 Method 8310.

SL#	SAMPLE DESCRIPTION	MATRIX
S912424*1	PZ-12A N7895	Liquid
S912424*2	CEF-43-14DA	Liquid
S912424*3	CEF-43-25A	Liquid
S912424*4	CEF-43-28DA	Liquid
S912424*5	CEF-43-40A	Liquid
S912424*6	CEF-43-41A	Liquid
S912424*7	CEF-43-47DA	Liquid
S912424*8	CEF-342-2DB	Liquid
S912424*9	CEF-43-DU01	Liquid

A lab control standard was analyzed for quality control.

Sample S912424-6 required analysis at a dilution of 1:10 due to the abundance of target analytes.

Serial Number 112574

SL SAVANNAH LABORATORIES & ENVIRONMENTAL SERVICES, INC.

ANALYSIS REQUEST AND CHAIN OF CUSTODY RECORD

- [x] 5102 LaRoche Avenue, Savannah, GA 31404 — Phone: (912) 354-7858 — Fax: (912) 352-0165
- [ ] 2846 Industrial Plaza Drive, Tallahassee, FL 32301 — Phone: (904) 878-3994 — Fax: (904) 878-9504
- [ ] 414 SW 12th Avenue, Deerfield Beach, FL 33442 — Phone: (954) 421-7400 — Fax: (954) 421-2584
- [ ] 900 Lakeside Drive, Mobile, AL 36693 — Phone: (334) 666-6633 — Fax: (334) 666-6696
- [ ] 6712 Benjamin Road, Suite 100, Tampa, FL 33634 — Phone: (813) 885-7427 — Fax: (813) 885-7049
- [ ] 100 Alpha Drive, Suite 110, Destrehan, LA 70047 — Phone: (504) 764-1100 — Fax: (504) 725-1163

PROJECT REFERENCE	PROJECT NO.	P.O. NUMBER
DAY TANK 2 NASCF	N7895	

PROJECT LOC. (State)	SAMPLER(s) NAME	PHONE	FAX
FL	Rob Hill, Merv Dale, J. Elliot	904 281-0400	904-281-0070

CLIENT NAME	CLIENT PROJECT MANAGER
~~U.S.NA~~ Tetra Tech	Sam PRATT

CLIENT ADDRESS (CITY, STATE, ZIP): 7018 A.C. SKINNER PKWY., STE 250, JAX, FL 32256

MATRIX TYPE — REQUIRED ANALYSES — PAGE 1 OF 1

- [x] STANDARD REPORT DELIVERY
- [ ] EXPEDITED REPORT DELIVERY (surcharge)

Date Due: _____

SAMPLE DATE	SAMPLE TIME	SL NO.	SAMPLE IDENTIFICATION	AQUEOUS (WATER)	SOLID OR SEMISOLID	AIR	NONAQUEOUS LIQUID (oil, solvent, etc)	SW846 8021B	SW846 8310									REMARKS
								HCL	None									
4/15/99	1150		PZ-12A N7895	X				3✓	2									
	1640		CEF-~~04~~-43-14DA	X				3✓	2									
	1205		CEF-43-25A	X				3✓	2									
	1452		CEF-43-28DA	X				3✓	2									
	1441		CEF-43-40A	X				3	2									
	1437		CEF-43-41A	X				3	2									
	1416		CEF-43-47DA	X				3	2									
	1400		CEF-342-2DB	X				3	2									
	0000		CEF-43-DU01	X				3	2									
—	—		TRIP BLANK 913F	X				3	2									

RELINQUISHED BY: (SIGNATURE)	DATE	TIME	RELINQUISHED BY: (SIGNATURE)	DATE	TIME	RELINQUISHED BY: (SIGNATURE)	DATE	TIME
F Swafford	4/16/99	2:40	Merwin W. Dale	4/15/99	1800			
RECEIVED BY: (SIGNATURE)	**DATE**	**TIME**	**RECEIVED BY: (SIGNATURE)**	**DATE**	**TIME**	**RECEIVED BY: (SIGNATURE)**	**DATE**	**TIME**
Merwin W. Dale	4/15/99	0800						

LABORATORY USE ONLY

RECEIVED FOR LABORATORY BY: (SIGNATURE)	DATE	TIME	CUSTODY INTACT	CUSTODY SEAL NO.	SL LOG NO.	LABORATORY REMARKS:
F Swafford	4/16/99	9:08	[x] YES [ ] NO		S912424	

ATTACHMENT D

GROUNDWATER SAMPLE LOG SHEETS

GROUNDWATER SAMPLE LOG SHEET

Project Site Name: DAY TANK 2
Project No.: N7895

[ ] Domestic Well Data
[X] Monitoring Well Data
[ ] Other Well Type:
[ ] QA Sample Type:

Sample ID No.: ~~GE~~ PZ-12A N7895
Sample Location: NAS CECIL FIELD
Sampled By: M. DALE
C.O.C. No.:
Type of Sample:
[X] Low Concentration
[ ] High Concentration

SAMPLING DATA

	Color	pH	S.C. mS/cm	Temp. °C	Turbidity NTU	DO (mg/L) Meter	DO (mg/L) Titration	~~CO_2~~	~~H_2S~~	~~Fe+2~~ MD
Date: 4/15/99										
Time: 1150										
Method: Bailer	LT. BRN	5.40	.113	21.6	178	0.71	N/A			

PURGE DATA

	Volume	pH	S.C.	Temp (°C)	Turbidity	DO	Salinity	Time		
Date: 4/15/99										
Method: Submersible	Initial	5.69	.238	21.8	999	8.80	0.00	09:39:30		
Monitor Reading (ppm): 0	~~MD~~ 1	5.78	~~.099~~	21.5	289 MD	8.95	0.00	09:44:30		
Well Casing Diameter: 2 IN.	2	5.48	.127	21.5	228	1.95	0.00	09:49:30		
Well Casing Material: PVC	3	5.40	.113	21.6	178	0.71	0.00	09:52:30	Stop	
Total Well Depth (TD): 14.98										
Static Water Level (WL): 6.55										
One SCRN Casing Volume (gal/L): 1.4										
Start Purge (hrs): 09:39:30										
End Purge (hrs): 09:52:30										
Total Purge Time (min): 13										
Total Vol. Purged (gal/L): 23										

SAMPLE COLLECTION INFORMATION

Analysis	Preservative	Container Requirements	Collected
SW 846 8021B	HCL	(3) 40 ML VIALS	yes
SW 846 8310	None	(2) 1 Liter glass ambers	yes

OBSERVATIONS / NOTES

Pumping 1L in 6-7 sec = 2.2 GPM ; 5 GALS AT 094230 ; 5 GALS AT 094530 ; 5 GALS AT 094808.
5 GALS AT 095115 ; 3 GALS AT END

095230 STOP Pumping
3x1.4 = 4.2 5x1.4 = 7 TOTAL PUMPED = 23 GALS. H_2O slightly cloudy.

Circle if Applicable:

MS/MSD	Duplicate ID No.:
N/A	N/A

Signature(s): Melvin W. Dale

GROUNDWATER SAMPLE LOG SHEET

Project Site Name: DAY TANK 2
Project No.: N7895

[ ] Domestic Well Data
[X] Monitoring Well Data
[ ] Other Well Type:
[ ] QA Sample Type:

Sample ID No.: CEF-43-25A
Sample Location: NAS CECIL FIELD
Sampled By: M. DALE
C.O.C. No.:
Type of Sample:
[X] Low Concentration
[ ] High Concentration

SAMPLING DATA

	Color	pH	S.C. mS/cm	Temp. °C	Turbidity NTU	DO (mg/L) Meter	DO (mg/L) ~~Titration~~	~~CO_2~~ MD	~~H_2S~~	~~Fe+2~~
Date: 4/15/99										
Time: 1205										
Method: Bailer	LT. BRN	6.18	.220	21.5	640	0.93	N/A			

PURGE DATA

	Volume	pH	S.C.	Temp (°C)	Turbidity	DO	Salinity	Time	
Date: 4/15/99									
Method: Submersible	Initial	6.25	.264	21.6	718	0.93	0.01	~~1016~~ 1015	MD
Monitor Reading (ppm): 0	1	6.11	.217	21.5	999	1.11	0.00	1020	
Well Casing Diameter: 2 IN.	2	6.18	.220	21.5	640	0.93	0.00	1025	
Well Casing Material: PVC	3							1028	STOP Purge
Total Well Depth (TD): 15.47									
Static Water Level (WL): 7.33									
One ~~Casing~~ SCREN Volume (gal/L): 1.3									
Start Purge (hrs): ~~1016~~ 1015									
End Purge (hrs): 1028									
Total Purge Time (min): 13									
Total Vol. Purged (gal/L): 15									

SAMPLE COLLECTION INFORMATION

Analysis	Preservative	Container Requirements	Collected
SW846 8021B	HCL	3 (40 ML) VIALS	yes
SW846 8310	None	2 - 1 Liter Glass Ambers	yes

OBSERVATIONS / NOTES

Initial Pumping 1L in 7sec = 2.2 GPM. 5 GALS AT 10:18:30; 5 GALS AT 1023; 5 GALS AT 1028.
@1020 pump rate slowed to 1L in 11sec = 1.4 GPM

15.47 - 7.33 = 8.14 FT.

Circle if Applicable:

MS/MSD	Duplicate ID No.:	Signature(s):
N/A	N/A	Merwin Dale

GROUNDWATER SAMPLE LOG SHEET

Project Site Name: DAY TANK 2
Project No.: N7895

[ ] Domestic Well Data
[X] Monitoring Well Data
[ ] Other Well Type:
[ ] QA Sample Type:

Sample ID No.: CEF-43-40A
Sample Location: Day Tank 2
Sampled By: J. Elliott
C.O.C. No.:
Type of Sample:
[X] Low Concentration
[ ] High Concentration

SAMPLING DATA

	Color	pH	S.C. mS/cm	Temp. °C	Turbidity NTU	DO (mg/L) Meter	DO (mg/L) Titration	~~CO_2~~	~~H_2S~~	~~Fe^{+2}~~ mg
Date: 4-15-99										
Time: 1441										
Method: Bailer	Clear	5.58	.086	21.9	97	1.69	—	—	—	—

PURGE DATA

	Volume	pH	S.C.	Temp (°C)	Turbidity	DO	Salinity	Time		
Date: 4-15-99										
Method: Submersible	Initial	6.11	.224	22.6	>999	1.57	0.00	1349		
Monitor Reading (ppm): —	8 gal	5.74	.097	20.0	399	1.66	0.00	1354		
Well Casing Diameter: 2" ID	14 gal	5.50	.089	22.2	125	1.88	0.00	1359		
Well Casing Material: PVC	20 gal	5.58	.086	21.9	97	1.69	0.00	1404		
Total Well Depth (TD): 14.98								End Purge		
Static Water Level (WL): 7.85										
One Casing Volume(gal/L): 1.1 gal										
Start Purge (hrs): 1349										
End Purge (hrs): 1424										
Total Purge Time (min): 15 min										
Total Vol. Purged (gal/L): 20 gal										

SAMPLE COLLECTION INFORMATION

Analysis	Preservative	Container Requirements	Collected
SW846 8021B	HCL	(3) 40 ml glass vials	yes
SW846 8310	None	(2) 1 L amber jars	yes

OBSERVATIONS / NOTES

Circle if Applicable:

MS/MSD	Duplicate ID No.:	Signature(s):
N/A	N/A	

GROUNDWATER SAMPLE LOG SHEET

Project Site Name: DAY TANK 2
Project No.: N7895

[ ] Domestic Well Data
[X] Monitoring Well Data
[ ] Other Well Type:
[ ] QA Sample Type:

Sample ID No.: CEF-43-41A
Sample Location: NAS CECIL FIELD
Sampled By: M. DALE
C.O.C. No.:
Type of Sample:
[X] Low Concentration
[ ] High Concentration

SAMPLING DATA

	Color	pH	S.C. mS/cm	Temp. °C	Turbidity NTU	DO (mg/L) Meter	DO (mg/L) ~~Titration~~	~~CO_2~~	~~H_2S~~	~~Fe^{+2}~~
Date: 4/15/99										
Time: 1437										
Method: Bailer	LT. BRN	6.20	.427	21.7	134	1.32	N/A			

PURGE DATA

	Volume	pH	S.C.	Temp (°C)	Turbidity	DO	Salinity	Time		
Date: 4/15/99										
Method: Submersible	0 Initial	6.35	.438	21.9	258	0.93	0.01	1054		
Monitor Reading (ppm): 0	1	6.28	.446	21.7	263	1.21	0.01	1059		
Well Casing Diameter: 2 IN.	2	6.18	.437	21.8	184	1.14	0.01	1107		
Well Casing Material: PVC	3	6.20	.427	21.7	134	1.32	0.01	1112		
Total Well Depth (TD): 14.61		—	—	—	—	—	—	1114	Stop purge	
Static Water Level (WL): 8.42										
One ~~Casing~~ SCM Volume (gal/L): 1.0										
Start Purge (hrs): 1054										
End Purge (hrs): 1114										
Total Purge Time (min): 20										
Total Vol. Purged (gal/L): 17.5										

SAMPLE COLLECTION INFORMATION

Analysis	Preservative	Container Requirements	Collected
SW 846 8021B	HCL	(3) 40 ML VIALS	yes
SW 846 8310	None	(2) 1 Liter glass ambers	yes

OBSERVATIONS / NOTES

~~Time~~ 1058 : 5 GALS. ; 1103 = 5 GALS. ; 1111 = 5 GALS ; 1114 = 2.5 GALS.

14.61 - 8.42 = 6.19 FT 1L IN 17 sec = 0.9 GPM (Time 1059)

Circle if Applicable:

MS/MSD	Duplicate ID No.:	Signature(s):
N/A	N/A	Michelle Dale

GROUNDWATER SAMPLE LOG SHEET

Project Site Name: DAY TANK 2
Project No.: N 7895

[ ] Domestic Well Data
[X] Monitoring Well Data
[ ] Other Well Type:
[ ] QA Sample Type:

Sample ID No.: CEF-43-28DA
Sample Location: NAS CECIL FIELD
Sampled By: M. DALE
C.O.C. No.:
Type of Sample:
[X] Low Concentration
[ ] High Concentration

SAMPLING DATA

	Color	pH	S.C. mS/cm	Temp. °C	Turbidity NTU	DO (mg/L) Meter	DO (mg/L) ~~Titration~~	~~CO_2~~	~~H_2S~~	~~Fe^{+2}~~
Date: 4/15/99										
Time: 1452										
Method: BAILER	LT. BRN	5.06	.071	23.3	269	1.07	N/A			

PURGE DATA

	Volume	pH	S.C.	Temp (°C)	Turbidity	DO	Salinity	Time		
Date: 4/15/99										
Method: Submersible	Initial	5.77	.123	23.9	994	1.19	0.00	1358		
Monitor Reading (ppm): 0	8.1	5.23	.076	23.5	221	0.43	0.00	1405		
Well Casing Diameter: 2 IN	16.2	5.15	.073	23.3	272	1.10	0.00	1410		
Well Casing Material: PVC	22.5	5.06	.071	23.3	269	1.07	0.00	1414		
Total Well Depth (TD): 56.47								1415	Stop purging	
Static Water Level (WL): 7.02										
One ~~Casing~~ SCRN Volume (gal/L): 1.8										
Start Purge (hrs): 1358										
End Purge (hrs): 1415										
Total Purge Time (min): 17										
Total Vol. Purged (gal/L): 22.5										

5FT. SCRN

SAMPLE COLLECTION INFORMATION

Analysis	Preservative	Container Requirements	Collected
SW846 8021B	HCL	(3) 40 mL VIALS	yes
SW 846 8310	None	(2) 1 Liter Amber glass	yes

OBSERVATIONS / NOTES

INITIAL pump rate = 1L/9sec = 1.76 GPM
1401 (Time) = 5 GALS
1405 (Time) = 5 GALS
1409 (Time) = 5 GALS
1413 (Time) = 5 GALS
1415 (Time) = 2.5 GALS

Circle if Applicable:

MS/MSD	Duplicate ID No.:	Signature(s):
N/A	None	Melvin W. Dale

CEF-43-40A Sampled AT 1441

GROUNDWATER SAMPLE LOG SHEET

Project Site Name: Day Tank 2
Project No.: 7895

[ ] Domestic Well Data
[X] Monitoring Well Data
[ ] Other Well Type:
[ ] QA Sample Type:

Sample ID No.: CEF-43-47DA
Sample Location: Day Tank 2
Sampled By: J. Elliott
C.O.C. No.:
Type of Sample:
[X] Low Concentration
[ ] High Concentration

SAMPLING DATA

	Color	pH	S.C. mS/cm	Temp. °C	Turbidity NTU	DO (mg/L) Meter	DO (mg/L) Titration	~~CO_2~~	~~H_2S~~	~~Fe^{+2}~~
Date: 4-15-99										
Time: 1416										
Method: Bailer	Sl. cloudy Clear	5.41	.085	22.8	63	0.93	—	—	—	—

PURGE DATA

	Volume	pH	S.C.	Temp (°C)	Turbidity	DO	Salinity	Time		
Date: 4-15-99										
Method: Submersible	Initial	5.62	4.10	23.0	506	1.02	0.00	1048		
Monitor Reading (ppm): —	5 gal	5.77	.123	22.9	502	0.76	0.00	1053		
Well Casing Diameter: 2" PVC	15 gal	5.41	.085	22.8	63	0.93	0.00	1058		
Well Casing Material: PVC	3									
Total Well Depth (TD): 43.4										
Static Water Level (WL): 8.87										
One Casing Volume(gal/L): 0.8 gal										
Start Purge (hrs): 1048										
End Purge (hrs): 1058										
Total Purge Time (min): 10										
Total Vol. Purged (gal/L): 15										

SAMPLE COLLECTION INFORMATION

Analysis	Preservative	Container Requirements	Collected
TCL Volatiles (8021B)	HCl/4°C	(3) 40 ml glass vials	yes
PAH's (8310)	4°C	(2) 1 L amber jars	yes

OBSERVATIONS / NOTES

Circle if Applicable:

MS/MSD N/A

Duplicate ID No. N/A

Signature(s): [signature]

GROUNDWATER SAMPLE LOG SHEET

Project Site Name: DAY TANK 2
Project No.: N7895

[] Domestic Well Data
[X] Monitoring Well Data
[] Other Well Type:
[] QA Sample Type:

Sample ID No.: CEF-43-14DA
Sample Location: NAS CECIL FIELD
Sampled By: M. DALE
C.O.C. No.:
Type of Sample:
[X] Low Concentration
[] High Concentration

SAMPLING DATA:

	Color	pH	S.C.	Temp.	Turbidity	DO	Salinity	Other
Date: 4/15/99	Visual	Standard	mS/cm	Degrees C	NTU	mg/l	%	NA
Time: 1640								
Method: BAILER	CLEAR	6.92	.441	23.4	18	0.72	0.01	—

PURGE DATA:

	Volume	pH	S.C.	Temp. (C)	Turbidity	DO	Salinity	~~Other~~ Time
Date: 4/15/99								
Method: Submersible	Initial	7.29	.437	25.2	30	0.64	0.01	1540
Monitor Reading (ppm): 0	0 ft	7.23	.440	24.7	12	0.48	0.01	1545
Well Casing Diameter & Material	below	7.29	.440	23.8	415	0.46	0.01	1550
Type: 2 IN. PVC	3	7.07	.444	23.6	75	0.51	0.01	1556
Total Well Depth (TD): 86.95		6.96	.443	23.5	37	0.63	0.01	1600
Static Water Level (WL): 10.37		6.92	.441	23.4	18	0.72	0.01	1604
One ~~Casing~~ SCRN Volume (gal/L): 0.8								
Start Purge (hrs): 1540								
End Purge (hrs): 1605								
Total Purge Time (min): 25								
Total Vol. Purged (gal/L): 33.5								

END Purge 1605
MWDale

SPT. SCRN.

SAMPLE COLLECTION INFORMATION:

Analysis	Preservative	Container Requirements	Collected
SW846 8021B	HCL	(3) 40 ML VIALS	yes
SW846 8310	None	(2) 1 Liter glass Amber	yes

OBSERVATIONS / NOTES:

Time 1543 20 (5 GALS.)
Time 1547 (5 GALS.)
Time 1551 (5 GALS.) About this time water got cldy.
Time 1555 20 (5 GALS) water clear.
Time 1559 (5 GALS.) water clear.
water clear, initially.

Time 1603 = 5 GALS.
Time 1605 = 3.5 GALS.

Circle if Applicable:

MS/MSD	Duplicate ID No.:
N/A	CEF-43-DUQ1

Signature(s): Melvin W. Dale

GROUNDWATER SAMPLE LOG SHEET

Project Site Name: DAY TANK 2
Project No.: N 7895

[ ] Domestic Well Data
[X] Monitoring Well Data
[ ] Other Well Type:
[ ] QA Sample Type:

Sample ID No.: CEF-342-2DB
Sample Location: NAS CECIL FIELD
Sampled By: M. DALE
C.O.C. No.:
Type of Sample:
[X] Low Concentration
[ ] High Concentration

SAMPLING DATA

Date: 4/15/99	Color	pH	S.C. mS/cm	Temp. °C	Turbidity NTU	DO (mg/L) Meter	DO (mg/L) ~~Titration~~	~~CO_2~~	~~H_2S~~	~~Fe+2~~ MD
Time: 1400										
Method: Bailer	Clear	7.55	.446	23.3	6	1.14	N/A			

PURGE DATA

Date: 4/15/99	Volume	pH	S.C.	Temp (°C)	Turbidity	DO	Salinity	Time		
Method: Submersible	Initial	7.47	.446	24.6	40	1.16	0.01	1146		
Monitor Reading (ppm): 0	1	7.41	.445	24.0	13	1.12	0.01	1150		
Well Casing Diameter: 2 IN. 5 FT. SCRN	2	7.93	.428	23.5	9	1.66	0.01	1154		
Well Casing Material: PVC	3	7.55	.446	23.3	6	1.14	0.01	1159		
Total Well Depth (TD): 86.55					MD			1201	Stop purging.	
Static Water Level (WL): 8.95										
One ~~Casing~~ SCRN Volume (gal/L): 0.8										
Start Purge (hrs): 1146										
End Purge (hrs): 1201										
Total Purge Time (min): 15										
Total Vol. Purged (gal/L): 25										

SAMPLE COLLECTION INFORMATION

Analysis	Preservative	Container Requirements	Collected
SW846 8021B	HCL	(3) 40 ML VIALS	yes
SW 846 8310	NONE	(2) 1 Liter glass ambers	yes

OBSERVATIONS / NOTES

Time 1149 = 5GALS.; TIME 1152 = 5 GALS.; Time 1155 = 5GALS.; Time 1158 = 5GALS.
Time 1201 = 5GALS.

INITIAL
1L in 8sec

Circle if Applicable:

MS/MSD	Duplicate ID No.:	Signature(s):
N/A	N/A	Marvin W. Dale