N61165.AR.003078
CNC CHARLESTON
5090.3a

RESOURCE CONSERVATION AND RECOVERY ACT FACILITY ASSESSMENT ADDENDUM
WITH TRANSMITTAL CNC CHARLESTON SC
2/24/1994
ENSAFE/ ALLEN AND HOSHALL

RCRA FACILITY ASSESSMENT ADDENDUM
CHARLESTON NAVAL COMPLEX

Prepared for:

Department of the Navy
Southern Division
Naval Facilities Engineering Command
North Charleston, South Carolina

Contract Number: N62467-89-0318
CTO - 0029

Prepared by:

EnSafe/Allen & Hoshall
4130 Faber Place Drive Suite 107
North Charleston, South Carolina 29405
(803) 747-7937

February 24, 1994

February 23, 1993

Mr. Joseph R. Franzmathes
Director of Waste Management Division
U.S. Environmental Protection Agency
Region IV
345 Courtland Street, N.E.
Atlanta, GA 30365

Re: Revised RCRA Facility Assessment Addendum, Charleston Naval Shipyard

Dear Mr. Franzmathes,

On February 18 , 1994, a addendum to the Charleston Naval Shipyard (CNSY) RCRA Facility Assessment (RFA) addressing three new SWMUs and 118 potential areas of concern was submitted to your office for review and comment. Following submittal of the document, EnSafe/Allen & Hoshall (E/A&H) discovered that information pertaining to one of the potential areas of concern and a figure were inadvertently omitted. The two pages of missing text were subsequently forwarded to Mr. Doyle Brittain. On behalf of the NSY, E/A&H has revised the RFA Addendum and is providing you three copies of this document to facilitate the review process. Please disregard the previous version.

E/A&H apologizes for any inconvenience this may have caused. If you have any questions please do not hesitate to contact me at (803) 747-7937.

Sincerely,
EnSafe/Allen & Hoshall

By: Todd Haverkost
Project Geologist

cc: R.E. DeWitt, CNSY
Matthew A. Hunt, SOUTHNAVFACENGCOM

DEPARTMENT OF THE NAVY
CHARLESTON NAVAL SHIPYARD
CHARLESTON, S.C. 29408-6100

5090
Ser 106.23/0087
17 FEB 1994

Mr. Joseph R. Franzmathes
Director of Waste Management Division
U.S. Environmental Protection Agency
Region IV
345 Courtland Street, N.E.
Atlanta, GA 30365

RE: RCRA FACILITY ASSESSMENT COMPLETION

Dear Mr. Franzmathes:

Please find enclosed three copies of the RCRA Facility Assessment Addendum (RFAA) containing all information which is available at this time concerning the areas identified by the August 10, 1993 letter from Mr. Todd Daniels, Code 1863, SOUTHDIVNAVFACENGCOM.

The 90 day period required for completion of the RCRA Facility Assessment (RFA) was extended by your office to February 18, 1994 via Certified Letter dated December 14, 1993.

If you have any questions, please contact Bill Brasel at (803) 743-5519.

Sincerely,

Ed Hendle for

R. E. DEWITT
Director, Occupational Safety,
Health and Environmental Office
By direction of the Commander
Charleston Naval Shipyard

Encl:
(1) RCRA Facility Assessment (RFA)

Copy to:
SCDHEC (Ms. Kathy Williams)
COMNAVBASE (N34)
E/A&H (Dr. J. Speakman)
SOUTHDIVNAVFACENGCOM (187)

RCRA FACILITY
ASSESSMENT ADDENDUM
CHARLESTON NAVAL COMPLEX

Prepared for:

Department of the Navy
Southern Division
Naval Facilities
Engineering Command
North Charleston, SC

Contract No: N62467-89-0318
CTO - 0029

Prepared by:

EnSafe/Allen & Hoshall
4130 Faber Place Dr. Ste. 107
North Charleston, SC 29405
(803) 747-7937

February 24, 1994

Table of Contents

1.0 INTRODUCTION 1-1

2.0 DESCRIPTION OF FACILITY OPERATIONS AND WASTE GENERATION 2-1

3.0 ENVIRONMENTAL SETTING 3-1

4.0 SOLID WASTE MANAGEMENT UNIT (SWMU) AND POTENTIAL AREA OF CONCERN DESCRIPTIONS (PAOC) 4-1

4.1 SWMU #37 — Dredge Spoil Disposal Area 4-1
4.2 SWMU #38 — Coal Storage Yard 4-5
4.3 SWMU #39 — Building 9 Foundry 4-10
4.4 PAOC #1 — Former Abrasive Blasting Area 4-15
4.5 PAOC #2 — Blast Area in Drydock #3 4-18
4.6 PAOC #3 — Abrasive Blast Booth, Building 681 4-21
4.7 PAOC #4 — Paint Booth, Building 636 4-24
4.8 PAOC #5 — Spray Booth, Building 681 4-27
4.9 PAOC #6 — Coating and Spray System, Building 2A 4-30
4.10 PAOC #7 — Surface Coating Operations, Building 3 4-33
4.11 PAOC #8 — Paint Booth, Building 25 4-36
4.12 PAOC #9 — Paint Booths, Building 177 4-39
4.13 PAOC #10 — Paint Booth, Building 187 4-44
4.14 PAOC #11 — Paint Area, Building 212 4-47
4.15 PAOC #12 — Paint Booth, Building 218 4-50
4.16 PAOC #13 — Paint Shop, Building 223 4-53
4.17 PAOC #14 — Paint Booth, Building 241 4-57
4.18 PAOC #15 — Paint Booth, Building 242 4-60
4.19 PAOC #16 — Sanitary Sewer System 4-63
4.20 PAOC #17 — Drydock Discharges 4-65
4.21 PAOC #18 — Former Pickling Plant, Building 221 4-68
4.22 PAOC #19 — Lead Storage, Building 221 4-73
4.23 PAOC #20 — Dry Cleaning, Building 1189 4-76
4.24 PAOC #21 — Lead Storage, Building 9 4-79
4.25 PAOC #22 — Service Station, Building 1346 4-82
4.26 PAOC #23 — Grounds, Building NS-2 4-85
4.27 PAOC #24 — Pump House, Pier J 4-89
4.28 PAOC #25 — Charleston Naval Supply Center Fuel Farm 4-92
4.29 PAOC #26 — Pier M Laydown 4-96
4.30 PAOC #27 — Abrasive Blast Media Storage Area 4-99
4.31 PAOC #28 — Forge Shop, Building 6 4-102
4.32 PAOC #29 — Wash Area, Building 233 4-104
4.33 PAOC #30 — Hobby Shop, Building 1508 4-106
4.34 PAOC #31 — Aboveground Tank, Building 9 4-109

Table of Contents (Continued)12

4.35 PAOC #32 — CBU-412 Vehicle Maintenance Area 4-112
4.36 PAOC #33 — Motor Area, Building 177 4-115
4.37 PAOC #34 — DRMO, Building 1640 4-118
4.38 PAOC #35 — Former POL Drum Storage Area, Building 1604 4-121
4.39 PAOC #36 — Former Gasoline Station, Building NS-54 4-124
4.40 PAOC #37 — Unexploded Ordnance (UXO) 4-127
4.41 PAOC #38 — Satellite Accumulation Area, Building 43 4-129
4.42 PAOC #39 — Satellite Accumulation Area, Building 35 4-132
4.43 PAOC #40 — Satellite Accumulation Area, Building 9 4-135
4.44 PAOC #41 — Less-than-90-day Accumulation Area, Building 2 4-138
4.45 PAOC #42 — Satellite Accumulation Area, Building 59A 4-141
4.46 PAOC #43 — Satellite Accumulation Area, Building FBM 61 4-144
4.47 PAOC #44 Satellite Accumulation Area, Building 56 4-147
4.48 PAOC #45 — Satellite Accumulation Area, Building 226 4-150
4.49 PAOC #46 — Satellite Accumulation Area, Building FBM 61 4-153
4.50 PAOC #47 — Satellite Accumulation Area, Building 13 4-156
4.51 PAOC #48 — Less-Than-90-Day Accumulation Area, Building 80 . 4-159
4.52 PAOC #49 — Satellite Accumulation Area, Building 13 4-162
4.53 PAOC #50 — Satellite Accumulation Area, Building 13 4-165
4.54 PAOC #51 — Less-Than-90-day Accumulation Area, Building 236 . . 4-168
4.55 PAOC #52 — Satellite Accumulation Area, Building 13 4-171
4.56 PAOC #53 — Satellite Accumulation Area, Building 202 4-174
4.57 PAOC #54 — Satellite Accumulation Area, Building 202 4-177
4.58 PAOC #55 — Satellite Accumulation Area, Building 202 4-180
4.59 PAOC #56 — Satellite Accumulation Area, Building NS-53 4-183
4.60 PAOC #57 — Less-than-90-Day Storage Area, Building 236 4-186
4.61 PAOC #58 — Satellite Accumulation Area, Building 5 4-189
4.62 PAOC #59 — Less-than-90-Day Accumulation Area, Building 228 . . 4-192
4.63 PAOC #60 — Less-than-90-Day Accumulation Area, Building 1245 4-195
4.64 PAOC #61 — Satellite Accumulation Area, Building 5 4-197
4.65 PAOC #62 — Satellite Accumulation Area, Building 2A 4-200
4.66 PAOC #63 Satellite Accumulation Area, Building 218 4-201
4.67 PAOC #64 — Satellite Accumulation Area, Building 187 4-204
4.68 POAC #65 — Satellite Accumulation Area, Pier G 4-207
4.69 PAOC #66 — Satellite Accumulation Area, Building 212 4-211
4.70 PAOC #67 - Satellite Accumulation Area, Pier C 4-214
4.71 PAOC #68 — Satellite Accumulation Area, Drydock Number 2 . . 4-216
4.72 PAOC #69 — Satellite Accumulation Area, ARDM 3 4-218
4.73 PAOC #70 — Satellite Accumulation Area, Building 1518 (diver's locker) 4-220
4.74 PAOC #71 — Satellite Accumulation Area, Building 57 4-222
4.75 PAOC #72 — Satellite Accumulation Area, Building 675 4-225
4.76 PAOC #73 — Less-Than-90-Day Accumulation Area, Building 9 . 4-228

Table of Contents (Continued)

4.77 PAOC #74 — Satellite Accumulation Area, Building 241 4-231
4.78 PAOC #75 — Satellite Accumulation Area, Building 241 4-234
4.79 PAOC #76 — Less-Than-90-Day Storage Area, Building 13 4-237
4.80 PAOC #77 - Satellite Accumulation Area, Building 202 4-240
4.81 PAOC #78 - Satellite Accumulation Area, Building 202 4-243
4.82 PAOC #79 - Satellite Accumulation Area, Building 202 4-246
4.83 PAOC #80 - Satellite Accumulation Area, Building 13 4-249
4.84 PAOC #81 — Satellite Accumulation Area, Building 242 4-252
4.85 PAOC #82 — Satellite Accumulation Area, Building 13 4-255
4.86 PAOC #83 — Satellite Accumulation Area, Building 13 4-258
4.87 PAOC #84 — Satellite Accumulation Area, Building 241 4-261
4.88 PAOC #85 — Satellite Accumulation Area, Building 241 4-264
4.89 PAOC #86 — Satellite Accumulation Area, Building 35 4-267
4.90 PAOC #87 — Satellite Accumulation Area, Building 681 4-270
4.91 PAOC #88 — Satellite Accumulation Area, Building 1776 4-273
4.92 PAOC #89 — Satellite Accumulation Area, Building 249 4-276
4.93 PAOC #90 — Satellite Accumulation Area, Building 250 4-278
4.94 PAOC #91 - Satellite Accumulation Area, Building NH-51 4-280
4.95 PAOC #92 — Satellite Accumulation Area, Building 234 4-283
4.96 PAOC #93 — Satellite Accumulation Area, Building 35 4-286
4.97 PAOC #94 - Satellite Accumulation Area, Building 1346 4-289
4.98 PAOC #95 - Satellite Accumulation Area, Building 636 4-292
4.99 PAOC #96 - Satellite Accumulation Area, Building 636 4-295
4.100 PAOC #97 - Satellite Accumulation Area, Building 1508 4-298
4.101 PAOC #98 — Satellite Accumulation Area, Drydock Number 2 . . 4-301
4.102 PAOC #99 — Less-Than-90-Day Accumulation Area, Building 1173 4-303
4.103 PAOC #100 — Satellite Accumulation Area, Building NH-1 4-305
4.104 PAOC #101 — Satellite Accumulation Area, Building NH-1 4-307
4.105 PAOC #102 — Satellite Accumulation Area, Building 1175 4-309
4.106 PAOC #103 — Satellite Accumulation Area, Building NS-67 4-312
4.107 PAOC #104 — Satellite Accumulation Area, Building NH-1 4-315
4.108 PAOC #105 — Satellite Accumulation Area, Building FBM 61 4-316
4.109 PAOC #106 — Satellite Accumulation Area, Building 177 4-319
4.110 PAOC #107 — Satellite Accumulation Area, Building 44 4-322
4.111 PAOC #108 — Satellite Accumulation Area, Building FBM 61 4-325
4.112 PAOC #109 — Satellite Accumulation Area, Building 25 4-328
4.113 PAOC #110 — Satellite Accumulation Area, Building 32 4-331
4.114 PAOC #111 — Satellite Accumulation Area, Pier G 4-334
4.115 PAOC #112 — Satellite Accumulation Area, SGI Barge, Pier M 4-337
4.116 PAOC #113 — Satellite Accumulation Area, Building 810 4-339
4.117 PAOC #114 — Satellite Accumulation Area, Pier H 4-342
4.118 PAOC #115 — Satellite Accumulation Area, Drydock Number 1 . 4-344

Table of Contents (Continued)12

4.119 PAOC #116 — Temporary Satellite Accumulation Area, Pier Q . . 4-347
4.120 PAOC #117 — Temporary Satellite Accumulation Area, Building NH-21 4-349
4.121 PAOC #118 — Temporary Satellite Accumulation Area, CBU-412 Chapel 4-351

List of Figures

Figure 1-1 Solid Waste Management Units and Potential Areas of Concern 3
Figure 1-2 Solid Waste Management 4
Figure 4-1 Dredge Spoil Disposal Area 4-2
Figure 4-2 Coal Storage Area 4-6
Figure 4-3 Building 9 4-11
Figure 4-4 PAOC #1 Abrasive Blast Area 4-16
Figure 4-5 PAOC #2, Blast Area Drydock Number 3. 4-19
Figure 4-6 PAOC #3, Building 681, Blast Booth 4-22
Figure 4-7 PAOC #4, Building 636, Paint Booth 4-25
Figure 4-8 PAOC #5, Building 681, Spray Booth. 4-28
Figure 4-9 PAOC #6, Building 2A, Coating And Spray System. 4-31
Figure 4-10 PAOC #7 Building 3, Surface Coating 4-34
Figure 4-11 PAOC #8 — Paint Booth, Building 25 4-37
Figure 4-12 PAOC #9 — Paint Booths, Building 177 4-40
Figure 4-13 PAOC #10 — Paint Booth, Building 187 4-45
Figure 4-14 PAOC #11, Building 212, Paint Area. 4-48
Figure 4-15 PAOC #12, Building 218, Paint Booth 4-52
Figure 4-16 PAOC #13, Building 223, Paint Booths 4-54
Figure 4-17 PAOC #14, Building 241, Paint Booth 4-59
Figure 4-18 PAOC #15, Building 242, Paint Booth 4-61
Figure 4-19 PAOC #18, Building 221, Pickling Plant 4-69
Figure 4-20 PAOC #19, Building 221, Lead Storage Area 4-74
Figure 4-21 PAOC #20, Building 1189, Dry Cleaning 4-77
Figure 4-22 PAOC #21, Building 9, Lead Storage 4-80
Figure 4-23 PAOC #22, Building 1346, Gas Station 4-83
Figure 4-24 PAOC #23, Building NS-2, Grounds 4-86
Figure 4-25 PAOC #24, Pier J, Pump House 4-90
Figure 4-26 PAOC #25, NSC Fuel Farm 4-93
Figure 4-27 PAOFC #26, Pier M, Laydown Area 4-97
Figure 4-28 PAOC #27, Blast Hopper 4-100
Figure 4-29 PAOC #28, Building 6, Forge Shop 4-103
Figure 4-30 PAOC #29, Buiding 233, Wash Area 4-105
Figure 4-32 PAOC #32, Building 9, SAA 4-110
Figure 4-33 PAOC #32, Building 1176, Vehicle Maintenance Area 4-113
Figure 4-34 PAOC #33, Buidlign 177, SAA, Motor Area 4-116
Figure 4-35 PAOC #34, Building 1640, DRMO. 4-119
Figure 4-36 PAOC #35, Building 1604, POL Drum Storage 4-122
Figure 4-37 PAOC #36, Building NS-54, Former Gas Station 4-125
Figure 4-38 PAOC #38, Building 43, SAA 4-130
Figure 4-39 PAOC #39, Building 35, SAA 4-133
Figure 4-40 PAOC #40, Building 9, SAA 4-136
Figure 4-41 PAOC #41, Building 2, Less-Than-90 Storage Area 4-137
Figure 4-42 PAOC #42, Building 59-A, SAA 4-140

List of Figures (Continued)

Figure 4-43 PAOC #42, Building 59-A, SAA 4-143
Figure 4-44 PAOC #44, Building 56, SAA 4-146
Figure 4-45 PAOC #45, Building 226, Storage Area 4-149
Figure 4-46 PAOC #46, Building 61, SAA. 4-152
Figure 4-47 PAOC #47, Building 13, SAA 4-155
Figure 4-48 PAOC #48, Building 80, Less-Than 90-Day Storage Area 4-158
Figure 4-49 PAOC #49, Building 13, SAA. 4-161
Figure 4-50 PAOC #50, Building 13, SAA. 4-164
Figure 4-51 PAOC #51, Building 236, Less-Than 90-day Accumulation Area 4-167
Figure 4-52 PAOC #52, Building 13, SAA 4-170
Figure 4-53 PAOC #53, Building 202, SAA 4-173
Figure 4-55 PAOC #55, Building 202, SAA 4-179
Figure 4-56 PAOC #56, Building NS-53, SAA 4-182
Figure 4-57 PAOC #57, Building 236, Less-Than 90-Day Storage Area 4-185
Figure 4-58 PAOC #58, Building 5, SAA 4-188
Figure 4-59 PAOC #59, Building 228, Less-Than 90-Day Accumulation Area . . . 4-191
Figure 4-60 PAOC #60, Building 1245, Less-Than 90-Day Accumulation Area. . . 4-194
Figure 4-61 PAOC #61, Building 5, SAA. 4-196
Figure 4-62 PAOC #62, Building 2-A, Less-Than-90 Day Storage Area. 4-199
Figure 4-63 PAOC #63, Building 218, SAA. 4-202
Figure 4-64 PAOC #64, Building 187, SAA. 4-205
Figure 4-65 PAOC #65, Pier G, SAA. 4-208
Figure 4-66 PAOC #66, Building 212, SAA. 4-212
Figure 4-67 PAOC #67, Pier C, SAA. 4-215
Figure 4-68 PAOC #68, Dry Dock Number 1, SAA. 4-217
Figure 4-69 PAOC #69, ARDM, SAA 4-219
Figure 4-70 PAOC #70, Pier J, Pump House. 4-221
Figure 4-71 PAOC #71, Building 57, SAA. 4-223
Figure 4-72 PAOC #72, Building 675, SAA 4-226
Figure 4-73 PAOC #73, Building 9, SAA. 4-229
Figure 4-74 PAOC #74, Building 241, SAA 4-232
Figure 4-75 PAOC #75, Building 241, SAA. 4-235
Figure 4-76 PAOC #76, Building 13, SAA. 4-238
Figure 4-77 PAOC #77, Building 202, SAA. 4-241
Figure 4-78 PAOC #78, Building 1303, SAA. 4-244
Figure 4-79 PAOC #79, Building 202, SAA. 4-247
Figure 4-80 PAOC #80, Building 13, SAA. 4-250
Figure 4-81 PAOC #81, Building 242, SAA. 4-253
Figure 4-82 PAOC #82, Building 13, SAA. 4-256
Figure 4-83 PAOC #83, Building 13, SAA. 4-259
Figure 4-84 PAOC #84, Building 241, SAA. 4-262
Figure 4-85 PAOC #85, Building 241, SAA. 4-265
Figure 4-86 PAOC #86, Building 35, SAA. 4-268

List of Figures (Continued)

Figure 4-87 PAOC #87, Building 681, AA. 4-271
Figure 4-88 PAOC #88, Building 1176, SAA 4-274
Figure 4-89 PAOC #89, Building 249, SAA. 4-277
Figure 4-90 PAOC #90, Building 250, SAA. 4-279
Figure 4-91 PAOC #91, Building NH-51, SAA 4-281
Figure 4-92 PAOC #92, Building 234, SAA 4-284
Figure 4-93 PAOC #93, Building 35, SAA 4-287
Figure 4-94 PAOC #94, Building 1346, SAA 4-290
Figure 4-95 PAOC #95, Building 636, SAA 4-293
Figure 4-96 PAOC #96, Building 636, SAA 4-296
Figure 4-97 PAOC #97, Building 1508, SAA 4-299
Figure 4-98 PAOC #98, Drydock Number 2, SAA 4-302
Figure 4-99 PAOC #99, Building 1173, SAA 4-304
Figure 4-100 PAOC #105, Building 1175, SAA 4-310
Figure 4-101 PAPC #106, Building 177, SAA 4-313
Figure 4-102 PAOC #105, Building 61, SAA 4-317
Figure 4-103 PAOC 4-103, Building 177, SAA 4-320
Figure 4-104 PAOC #107, Building 44, SAA 4-323
Figure 4-105 PAOC #108, Building 61, SAA 4-326
Figure 4-106 PAOC #109, Building 25, Paint Booth 4-329
Figure 4-107 PAOC #110, Building 32, SAA 4-332
Figure 4-108 PAOC #111, Pier G, SAA 4-335
Figure 4-109 PAOC #112, Pier M, SAA 4-338
Figure 4-110 PAOC #113, Building 810, SAA 4-340
Figure 4-111 PAOC #114, Pier H, SAA 4-343
Figure 4-112 PAOC #115, Drydock Number 1, SAA 4-345
Figure 4-113 PAOC #116, Pier Q, SAA 4-348
Figure 4-114 PAOC #117, NH-21, SAA 4-350
Figure 4-115 PAOC #118, CBU 412, SAA 4-352

1.0 INTRODUCTION

In November 1984, Congress enacted the Hazardous and Solid Waste Amendments (HSWA) to the Solid Waste Disposal Act (SWDA). SWDA is more commonly known as the Resource Conservation and Recovery Act (RCRA) and will be referred to as RCRA herein. The HSWA established a RCRA corrective action program with a primary objective of cleaning up releases of hazardous waste or hazardous substances that may pose a threat to human health and the environment. The initial phase of the corrective action process is the RCRA Facility Assessment. The purpose of the RFA is to:

- Identify and gather information on releases at RCRA facilities;
- Evaluate SWMUs and other areas of concern (AOCs) for releases to all media and regulated units for releases to media other than groundwater;
- Making preliminary determinations regarding releases of concern and the need for further actions and interim measures at the facility;
- Screening from further investigations those SWMUs or AOCs which do not pose a threat to human health and the environment.

The Naval Complex at Charleston, South Carolina is located on various contiguous and discontiguous properties. The Naval Shipyard (NSY), which represents only one of several tenant commands present within the Naval Complex, was designated as the "lead activity" for compliance with the Navy Hazardous Material Management Program for all commands and activities. As the lead activity the NSY is the holder of the RCRA Part B Permit SCO 170 022 560. Section II.B.2 of the HSWA portion of the Part B Permit outlines the RFA requirements for the NSY.

In August, 1987 Ebasco Services, Inc. under contract to the United States Environmental Protection Agency (USEPA), Region IV prepared an Interim RCRA Facility Assessment (RFA) of Naval Base, Charleston, South Carolina. On 20-22 August 1990, the USEPA and South

Carolina Department of Health and Environmental Control (SCDHEC) performed an inspection of the installation which identified additional solid waste management units (SWMUs). Subsequent to the inspection, the Southern Division Naval Facilities Engineering Command (SOUTHNAVFACENGCOM) prepared two addendums to the RFA which addressed the new SWMUs. Upon completion of the second addendum, a total of 36 SWMUs had been identified.

On 10 August 1993, the NSY notified the U.S. Environmental Protection Agency (USEPA), Region IV and the South Carolina Department of Health and Environmental Control (SCDHEC) of three additional SWMUs and 118 sites that would be evaluated for consideration as potential SWMUs.

The following addendum to the RFA was prepared for the CNSY by EnSafe/Allen & Hoshall (E/A&H) at the direction of the SOUTHDIVNAVFACENGCOM under Contract No. N62467-89-D-0318. The RFA was performed to address the three new SWMUs and the 118 additional sites that will be referred to as potential areas of concern (PAOCs). The RFA was conducted in accordance with provisions outlined in Section II.B.2 of the HSWA portion of the Part B Permit and the USEPA document, *RCRA Facility Assessment Guidance* (EPA 530-86-053) published in October 1986. The locations of the three new SWMUS (SWMUs 37, 38, and 39) and the 118 PAOCs are depicted on Figures 1-1 and 1-2 (Plates 1 and 2 at the rear of this document).

2.0 DESCRIPTION OF FACILITY OPERATIONS AND WASTE GENERATION

See RCRA Facility Assessment dated August 1987 produced by EBASCO Services Inc. under USEPA contract.

3.0 ENVIRONMENTAL SETTING

See RCRA Facility Assessment dated August 1987 produced by EBASCO Services Inc. under USEPA contract.

4.0 SOLID WASTE MANAGEMENT UNIT (SWMU) AND POTENTIAL AREA OF CONCERN DESCRIPTIONS (PAOC)

4.1 SWMU #37 — Dredge Spoil Disposal Area

4.1.1 Unit Characteristics

Dredge spoil is produced by pumping sediment removed from the river to deepen and/or widen navigation channels. The dredge spoil disposal area was created when these sediments were hydraulically placed on the land area. The disposal area is an open land area surrounded by an earthen dike; it occupies approximately 60 acres (Figure 4-1). A review of aerial photographs available for the years 1939, 1941, 1949, 1954, 1957, 1963, 1973, 1980, 1982, 1989, and 1992 was conducted to determine age of the spoil area. The aerial photographs indicate dredge material was first applied to the southern end of the base between 1941 and 1949. Continued use of the area occurred until at least 1957 as evidenced by the photograph taken that year. In the remainder of the photographs, the disposal area becomes sparsely to densely vegetated, and the unit does not appear operational. A dike is first evident in the 1963 aerial photograph, and is visible in the 1973 photograph. In the 1980 and 1982 photographs, the dike is not discernible. In the 1989 photograph, the dike is clearly defined, has a different shape, and encompasses a somewhat smaller area. This same dike currently exists, is approximately 15 feet high, and is overgrown with vegetation for most of its extent. Two circular clearings (size unknown) in the disposal area are first evident on the 1973 aerial photograph, and are still evident in the 1980 and 1982 photographs. In the 1989 photograph, these two clearings are not discernible. The purpose of the clearings is not known; however, they may have represented contemporary spoil discharge areas or burn areas . New roads were constructed within the disposal area between 1982 and 1989. Several ditches, flow gates, and transferral pipes are now present throughout the disposal area. Figure 4-1 presents the current configuration and general conditions of the disposal area.

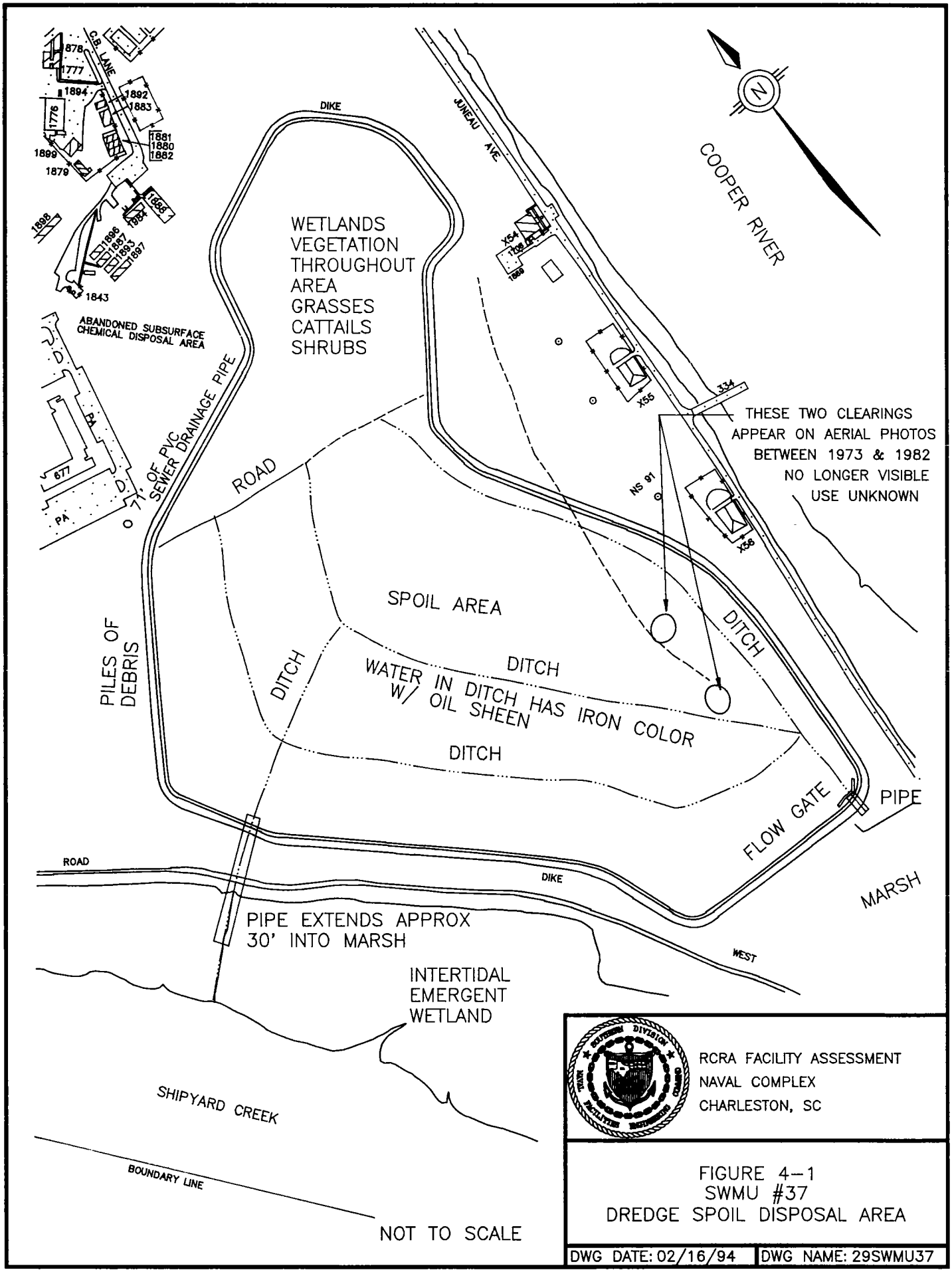
C.B. LANE
1878
1777
1894
1892
1883
1776
1881
1880
1882
1899
1879
1898
1866
1896
1867
1893
1897
1843
ABANDONED SUBSURFACE CHEMICAL DISPOSAL AREA
677
PA
D
71' OF PVC SEWER DRAINAGE PIPE
DIKE
JUNEAU AVE
COOPER RIVER
N
WETLANDS VEGETATION THROUGHOUT AREA GRASSES CATTAILS SHRUBS
X54
X55
X56
334
NS 91
THESE TWO CLEARINGS APPEAR ON AERIAL PHOTOS BETWEEN 1973 & 1982 NO LONGER VISIBLE USE UNKNOWN
ROAD
SPOIL AREA
PILES OF DEBRIS
DITCH
WATER IN DITCH HAS IRON COLOR W/ OIL SHEEN
FLOW GATE
PIPE
MARSH
WEST
PIPE EXTENDS APPROX 30' INTO MARSH
INTERTIDAL EMERGENT WETLAND
SHIPYARD CREEK
BOUNDARY LINE
NOT TO SCALE
RCRA FACILITY ASSESSMENT
NAVAL COMPLEX
CHARLESTON, SC
FIGURE 4-1
SWMU #37
DREDGE SPOIL DISPOSAL AREA
DWG DATE: 02/16/94
DWG NAME: 29SWMU37

4.1.2 Waste Characteristics

Heavy metals have been the primary constituents of concern associated with dredge spoils from the Cooper River. Heavy metals produce toxic system effects in sufficient dosages, primarily by interfering with cellular enzymes and/or nerve function. Heavy metal poisoning usually results from chronic exposure to low concentrations in food and water.

4.1.3 Migration Pathways

Soil is a contaminant migration pathway due to the placement of dredge material directly onto the land surface. Percolation of rainfall through the dredge spoils and underlying soil may result in the leaching of metals. Due to the shallow water table, groundwater is considered a viable contaminant migration pathway. Surface water/sediment is a contaminant migration pathway due to the close proximity of surface water bodies and sediment to most of the disposal area. Metals adsorbed to sediment particles may be entrained in the surface water runoff, particularly during storm events and be transported via drainage ditches which exist throughout the spoil area. Wind blown dust particles can result in the migration of metals contamination.

4.1.4 Evidence of Release

No spill reports, inspection reports or documented public complaints, indicating any release from the spoil disposal area have been located. Within the unit, stressed vegetation, odors, and discolored soil and water are evident.

4.1.5 Exposure Potential

The site is not in close proximity to any residential areas. Exposure to workers in the area may occur. The spoil area is adjacent to Shipyard Creek, the Cooper River, and marshes associated with these water bodies. The stormwater drainage system incorporated into the spoil area dikes provide a potential migration pathway to surface waters.

4.1.6 Recommended Action

No soil, groundwater, surface water, and sediment sampling has been conducted to assess the contamination potential at the dredge spoils disposal area. Further investigation under the RCRA Facility Investigation is recommended.

4.2 SWMU #38 — Coal Storage Yard

4.2.1 Unit Characteristics

The coal storage yard began operations in the 1940s, and is used for the unloading of coal railcars and for the intermediate storage of coal prior to use at the steam generation plant (Building 32). The coal pile is approximately 80'x 400'. Coal currently stored at the coal pile may be 17 years old.

The coal storage yard is on Naval Supply Center property in the northwestern corner of the Charleston Naval Complex (Figure 1-1). The coal pile is located south of McRitchie Avenue, adjacent to the western property boundary of the base and immediately south of Noisette Creek and associated marshes (Figure 4-2).

According to aerial photographs the coal storage yard is in an area that has been landfilled with dredge material in the past. The primary structure in the storage yard is a trestle upon which railroad cars are parked while they are unloaded. Coal is unloaded through the bottom of railcars onto concrete pads beneath, and on either side of, the trestle, then moved away from the trestle by crane. Two inactive septic systems are located on the east side of the coal pile near Building 1226. No (sanitary) wastewater is produced, and no access to a sewer system is provided. No berms are present to contain or control stormwater runoff.

4.2.2 Waste Characteristics

The stored coal itself is not considered hazardous, but rainwater percolating through the coal produces runoff water which has been very acidic (pH average as low as 2.5) and has had elevated total suspended solids and total metals. The pH of the runoff varies with the sulfur content of the coal.

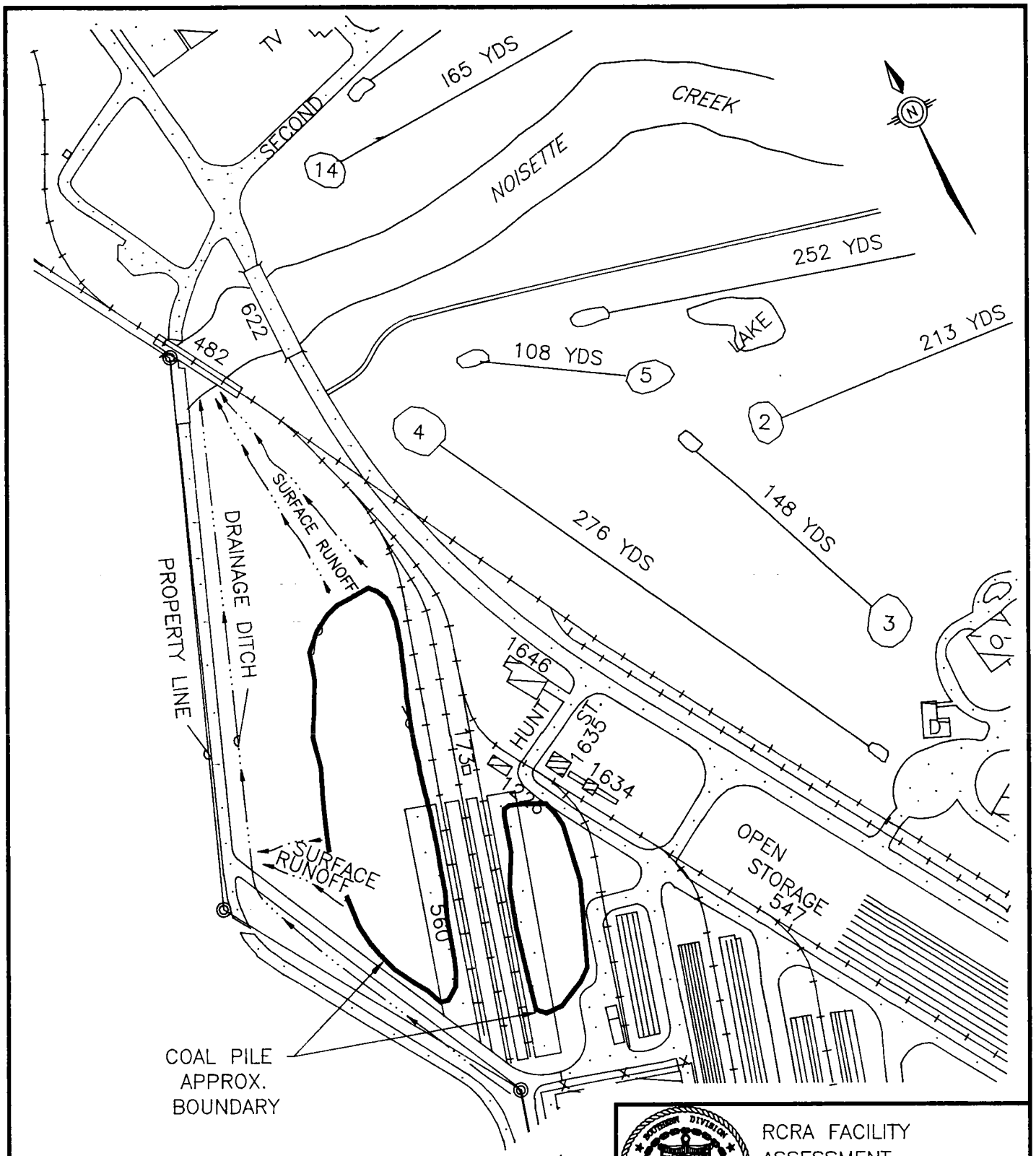

RCRA FACILITY
ASSESSMENT
NAVAL COMPLEX
CHARLESTON, SC

FIGURE 4-2
SWMU NO 38
COAL STORAGE AREA

NOT TO SCALE

DWG DATE: 02/16/94 | DWG NAME: 29SWMU38

4.2.3 Migration Pathways

Soil, groundwater, and surface water are potential migration pathways. The level topography of the coal storage yard, combined with a high mean rainfall and the relative absence of vegetation, causes stormwater runoff into drainage systems and Noisette Creek wetlands. Currently, stormwater runoff flows either into an earthen ditch on the west side of the coal pile (stormwater outfall number 4100), or across approximately 150 feet of wetland area to the north into a drainage ditch that discharges to Noisette Creek, which in turn discharges to the Cooper River. It is estimated that 3,265,500 gallons of stormwater runs off annually (using 51.4 inches average rainfall at 75% runoff). The estimated remaining 25 percent of stormwater infiltrates the soil and may transport contaminated coal pile leachate. Standing pools of stormwater runoff occur on the east side of the coal pile. At high tide water collects in the drainage ditch on the west side of the coal storage yard.

The EPA Effluent Guidelines and Standards for Steam Electric Power Generating Point Source Category (40 CFR 423) require that the pH of all coal pile discharges, except once-through cooling water, shall be within the range of 6.0 to 9.0, and that the total suspended solids (TSS) concentration not exceed 50 ppm. The volume of runoff subject to these criteria is limited to the 10-year, 24-hour rainfall, which for the Charleston area is approximately 7 inches. The stormwater runoff is not NPDES permitted. Treatment processes for the stormwater runoff have been proposed, but none have been implemented.

Fugitive dust caused by crane and tractors moving the coal is unregulated and unpermitted. It is likely that coal dust has covered surrounding properties.

4.2.4 Evidence of Release

On September 2, 1981, during dry weather, a sample of pooled leachate was collected and analyzed for pH (3.0) and phenol (0.004 ppm). On September 7, 1981, during a rain storm, a sample of the stormwater runoff was collected and analyzed for pH (2.5), total suspended

solids (158 ppm), total solids (1,482 ppm), phenol (0.11 ppm), chloride (4.5 ppm), biological oxygen demand (5) (1.5 ppm), chemical oxygen demand (265 ppm), cadmium (0.005 ppm), total chromium (0.04 ppm), chrome VI (0.04 ppm), copper (0.05 ppm), lead (95.0 ppm), mercury (0.0002 ppm), nickel (0.12 ppm), silver (0.01 ppm), and zinc (0.202 ppm).

Stormwater runoff samples collected on February 23, 1983 from depressions within the drainage area immediately downgradient of the coal pile had an average pH value of 2.5, and the TSS concentrations were below 50 ppm. Samples collected on February 23, 1983 from the drainage ditch adjacent to the coal pile were within the effluent NPDES guidelines for pH and TSS.

A soil sample collected on February 24, 1983 near the intersection of the drainage ditch and Noisette Creek was analyzed for pH (8.00), total solids (63.6 wt%), phenol (6.84 ug/gm), chloride (1.5 ug/gm), cadmium (<0.08 ppm), chromium (8.75 ppm), hexavalent chromium (<0.05 ppm), copper (201 ppm), lead (55.2 ppm), mercury (<0.1 ppm), nickel (124 ppm), silver (0.04 ppm), zinc (95.3 ppm), EP Toxicity Extract - arsenic (0.001 ppm), EP Toxicity Extract - selenium (<0.001 ppm), and total organic carbon (1.84 wt%).

A coal pile runoff liquid sample collected on March 1, 1983 was analyzed for pH (2.26), total suspended solids (25 ppm), total solids (23,150 ppm), phenol (0.002 ppm), chloride (90 ppm), biological oxygen demand (101 ppm), chemical oxygen demand (359 ppm), cadmium (0.08 ppm), chromium (0.33 ppm), hexavalent chromium (<0.05 ppm), copper (4.3 ppm), lead (<0.1 ppm), mercury (<0.002 ppm), nickel (14.4 ppm), silver (<0.03 ppm), zinc (45.4 ppm), EP Toxicity Extract - arsenic (0.002 ppm), and EP Toxicity Extract - selenium (<0.001 ppm).

Eight coal pile runoff liquid samples were collected between August 20, 1985 and November 1, 1985. The range of parameter concentrations is as follows: pH (2.16 - 6.56), total suspended solids (4 - 4,180 ppm), cadmium (<0.01 - 0.03 ppm), chromium (<0.05 - 0.22 ppm), copper (<0.1 - 2.3 ppm), lead (<0.05 ppm), nickel (<0.05 - 2.01 ppm), and zinc (<0.1 - 5.2 ppm).

Five liquid samples collected on October 22, 1985 and November 1, 1985 from a drainage ditch near the coal pile were analyzed for pH (2.61 - 6.56), total suspended solids (73 - 456 ppm), cadmium (<0.01 ppm), chromium (<0.05 - 0.05 ppm), copper (<0.1 - 0.3 ppm), lead (<0.05 ppm), nickel (0.05 - 0.33 ppm), and zinc (<0.1 - 1.1 ppm).

On August 31, 1988, four samples were collected from the coal pile and analyzed for heating value (13200 - 16500 Btu/lb), water content (2.37% - 4.37%), and sulfur (1120 ppm - 10400 ppm).

Grab samples of the stormwater runoff (collection date unknown) have contained aluminum (121 ppm), chromium (0.4 ppm), copper (1.7 ppm), iron (541 ppm), magnesium (93 ppm), manganese (2.6 ppm), nickel (5.7 ppm), tin (0.5 ppm), and zinc (17 ppm).

4.2.5 Exposure Potential

This PAOC is not close to any residential areas. However, The coal storage yard is approximately 200 feet from Noisette Creek. Wetlands exist on the west side of the coal pile. Approximately 3 to 5 acres may be affected by stormwater runoff from the coal pile. More wetlands habitats may be associated with this facility according to the 1988 US Department of the Interior Fish and Wildlife Service National Wetland Inventory Maps 5050 III SW and 5049 IV NW, the Army Corps of Engineers 1988 Wetland Delineation Survey of the Charleston Naval Base (Drawing H606-268, Map of Charleston Naval Shipyard Naval Station and Contiguous Activities Existing and Planned - as modified by the US Army Corps of Engineers Charleston District 2 February 1988), and visual observations.

4.2.6 Recommended Action

A RCRA Facility Investigation is recommended.

4.3 SWMU #39 — Building 9 Foundry

4.3.1 Unit Characteristics

Building 9 contains electrical power supply equipment, capacitors, transformers, rectifiers, furnaces, and ovens associated with foundry operations are reportedly no longer in use. Figure 1-1 locates Building 9 within the Naval Complex and Figure 4-3 depicts the location of the foundry area within the building. The foundry, built in 1906, was used to cast metal parts used in refitting ships. Processess associated with this facility included melting of copper alloy materials, and a "mixing and shakeout" procedure which used copper alloy and sands. The foundry is currently used by Shop 06 for the repair of hydraulic equipment and as a power substation (providing power for smoldering activities).

A foundry furnace, designated as company point I.D. Number 53 on the Bureau of Air Quality Control Permit Number 0560-0002, has a associated stack is 67 feet high that was not equipped with continuous emission monitors.

A foundry molds cyclone, designated as company point I.D. Number 54 on the Bureau of Air Quality Control Permit Number 0560-0002, has a 30 foot high, 2-foot inside diameter stack that was not equipped with continuous emission monitors.

Two above ground fuel oil storage tanks once served the foundry's furnaces and torches. Although the two tanks are no longer in use, they have not been decommissioned. One tank has a 3700-gallon capacity (PAOC #31), the other has a 586-gallon capacity.

An abandoned oven in the foundry area is posted with a sign indicating that it contains PCBs. An approximately 10'x 10'x 10' pit filled with soot and metal scrap was observed below an electric furnace in the foundry. Electrical panels in the former foundry area are intact. The smoldering pots contain friable asbestos.

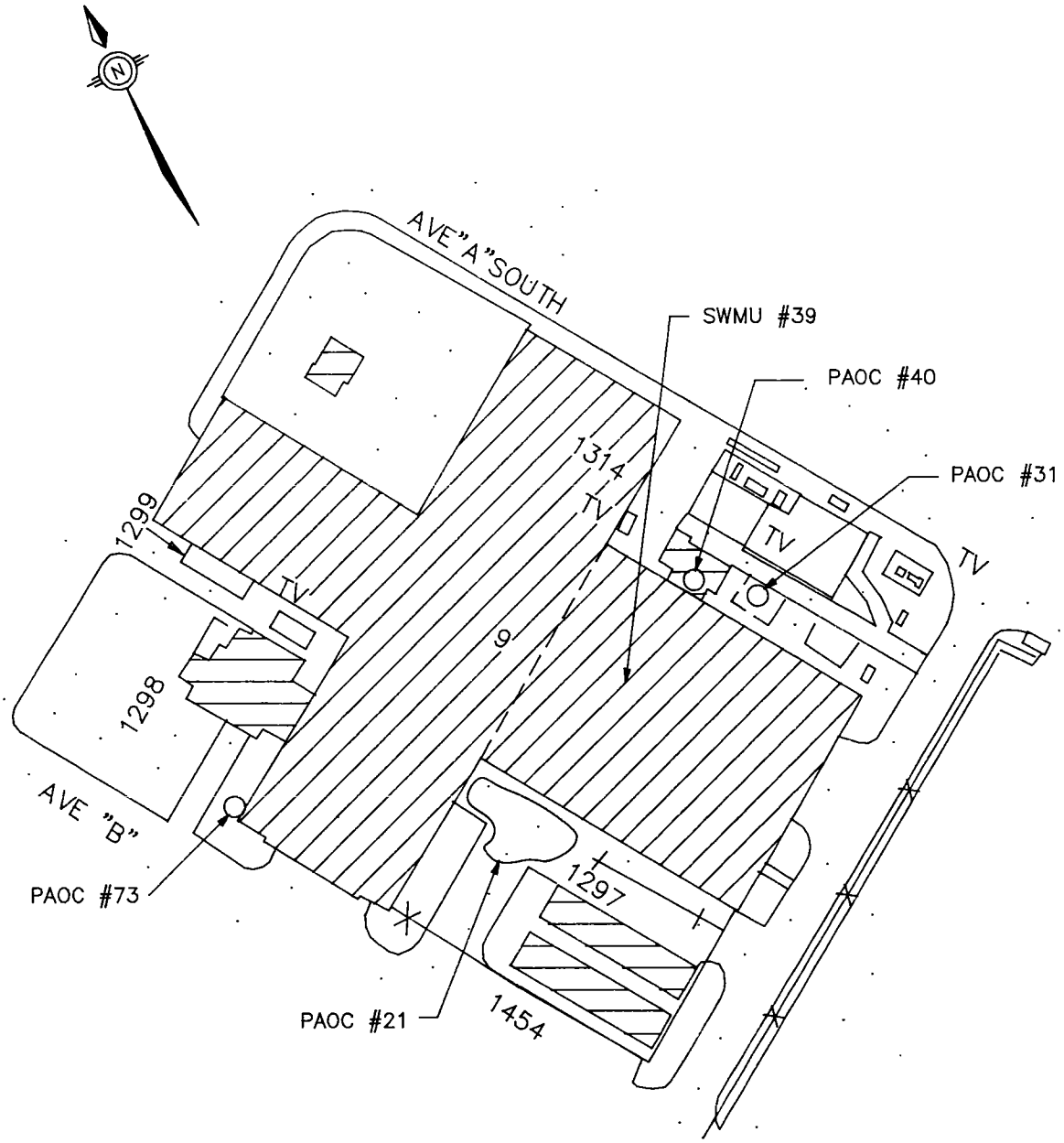

NOT TO SCALE

RCRA FACILITY
ASSESSMENT
NAVAL COMPLEX
CHARLESTON, S.C.

FIGURE 4-3
SWMU #39
BUILDING 9

DWG DATE: 02/16/94 | DWG NAME: 29SWMU39

Lead bricks and drums of hazardous materials (lead shot, linseed oil, and solvents) from previous foundry operations are currently stored in Building 1297.

4.3.2 Waste Characteristics

Wastes streams associated with past and/or present operations at the foundry include lead, linseed oil, solvents, copper, PCBs, friable asbestos, ceramic fibers, isopropanol, petroleum hydrocarbons, and paint waste.

4.3.3 Migration Pathways

Because this PAOC is located inside Building 9, the potential for impacts to soil and shallow groundwater are not known. The diversity of the waste stream, the age of the facility, unknown past handling practices may have resulted in releases that were not contained within the building causing soil and groundwater to be viable migration pathways. Air emmisions assocaited with the foundry operation are likely to have deposited particulate matter on the area surrounding the facility.

4.3.4 Evidence of Release

Several PCB-related releases have been reported. In a hand-written Department of the Navy memorandum, a transformer oil spill is reported for Building 9. The spill occurred on August 22, 1979, when a contractor was removing transformers. Transformer oil was spilled on the ground and cement on the southeast side of Building 9. According to the Shop 06 foreman at the time, approximately 100+ gallons of oil were spilled. The foreman took a sample of the fluid which was on concrete, and submitted it to a laboratory for PCB analysis (results unknown). The area was roped off and posted with "keep out" signs and a PCB notice. The spill was covered with an absorbant; the remainder of the cleanup history is unknown.

According to Hazardous Material Incident Report Number 84-55, on September 18, 1984, a capacitor in an electrical power supply exploded, spraying burned Pyranol oil residue inside a

small (8'x 6'x 7') containment room. The containment room was subsequently sealed off and posted with PCB warning labels. The damaged capacitor was removed on October 3, 1984. The containment room was cleaned up on October 19, 1984. The capacitor and cleanup debris were containerized in a 55-gallon drum and signed over for disposal through a Defense Logistics Agency (DLA) contract.

Environmental Incident Report Number 88-68 states that notification of a spill comprising 1/2 gallon of oil mixed with soot occurred on August 31, 1988. The mixture was on a rectifier and the cement pad on which the rectifier was seated. On August 26, 1988, a composite sample of three locations of the area of concern was collected and analyzed for PCBs (124 ppm Aroclor 1260). The area was cleaned; cleanup debris was placed in a drum and taken to Building 246 for disposal. For additional information, two wipe samples were subsequently sampled and analyzed for PCBs; one from the rectifier (120 μg/swab Aroclor 1254) and one from the cement pad on which the rectifier is seated (347 μg/swab Aroclor 1254). Due to these results, a double rinse cleanup was conducted on September 7, 1988.

Wipe samples were collected in January, 1989 from around the drain plug area of the cabinet and cement pad of transformer NS 1A analyzed for PCBs. The reported PCB concentrations were 1290 μg/swab of Aroclor 1260 (drain plug area) and 19000 μg/swab of Aroclor 1260 (cement pad). The same two areas were sampled in early February 1989 with PCB results of 125 μg/swab and 5620 μg/swab Aroclor 1260, respectively. These anaytical results necessitated further cleaning to meet the EPA requirements of 100 μg/100 cm2. The spill area was recleaned and resampled on April 15, 1989 (drain plug area 78 μg/swab and cement pad 132 μg/swab, Aroclor 1260) and again on May 27, 1989 (cement pad <10 μg/swab Aroclor 1260; it is unknown if the drain plug area was also sampled on this date).

Environmental Incident Report Number 91-83 states that a fire was discovered in the generating station at the foundry on May 23, 1991. The generating station provided the electricity to

operate the induction heaters which operated the foundry's ovens. The generating station contained PCB capacitors. It was determined that an air-cooled transformer overheated and caught on fire. The PCB capacitors were not damaged. Any subsequent cleanup procedures are not known.

On September 19, 1988, three wipe samples were collected from the interior of the foundry Ajax oven and analyzed for PCBs. One sample was a wipe of a 100 cm2 area on top of the second capacitor from the left in the bottom bank (386.32 μg/wipe Aroclor 1254). The other two samples are not based on a per unit area due to the large amount of dirt and grease also incidentally collected. These two samples were collected from the wooden base under the bottom bank of the capacitor (235.29 mg/g Aroclor 1254) and from the floor behind the capacitor banks (26.28 mg/g Aroclor 1254).

On October 27, 1988, airborne PCB (Aroclors 1254 and 1242) monitoring was conducted inside of an Ajax Oven Control Center in the foundry while the oven was in operation. Three areas were monitored over an approximate 3-hour period; only one area had a reported PCB concentration (0.0029 mg/m3 Aroclor 1254) above the laboratory quantitation limit of 0.0020 mg/m3.

4.3.5 Exposure Potential

Building 9 is located in a restricted access industrial area. As a consequence, the risk of exposure to contaminants at this facility is likely to be limited to site workers. Due to the known history of releases the risk posed may be substantial.

4.3.6 Recommended Action

Due to evidence of several past releases and lack of a thorough asessment of the potential hazards associated with these releases, it is recommended that a RCRA Facility Investigation be conducted.

4.4 PAOC #1 — Former Abrasive Blasting Area

4.4.1 Unit Characteristics

The former abrasive blasting area is south of Building 223 near the Cooper River. As illustrated in Figure 1-1, that area surrounds Slab 1275, the waste paint storage pad, where an RFI is underway. Figure 4-4 identifies the features associated with the former abrasive blasting area. Elevated hoppers for blasting abrasive comprise Facility 1450, immediately south of Slab 1275. Aerial photographs indicate that the abrasive blasting area has been industrialized since 1939. Originally, the slab and adjoining area were used for welding (estimated 1943-1955); later for abrasive blasting (hoppers were identified on a 1967 base map) and painting of ship components; more recently for storage of containerized waste paint and solvents and currently for anchor chain painting. In 1988, while the slab was undergoing RCRA closure, abrasive blasting and painting were observed in the immediate area. At that time, spent blasting grit (Black Beauty) covered the ground surrounding the paint pad; in November 1993, the environmental baseline survey (EBS) identified approximately 3 inches of grit covering the soil surrounding the slab.

4.4.2 Waste Characteristics

According to the 1993 *Remedial Investigation/Feasibility Study Compliance Oversight-Charleston Naval Shipyard (Dynamac)*, wastes associated with the slab area included cadmium, chromium, lead, cyanide, toluene, tetrachloroethylene and organotin paints from abrasive blasting. EP toxicity tests indicated that paint chips raked from the soil surface surrounding the slab were characteristically non-hazardous.

4.4.3 Migration Pathways

The abrasive blasting area adjoins the Cooper River, and no surface drainage control structures prevent runoff from the area entering that waterway. The layer of spent abrasive media and paint chips, observed during the 1988 paint pad closure, could impact the underlying soil and shallow groundwater. In 1990, spent blasting media were reportedly used in a fill south of

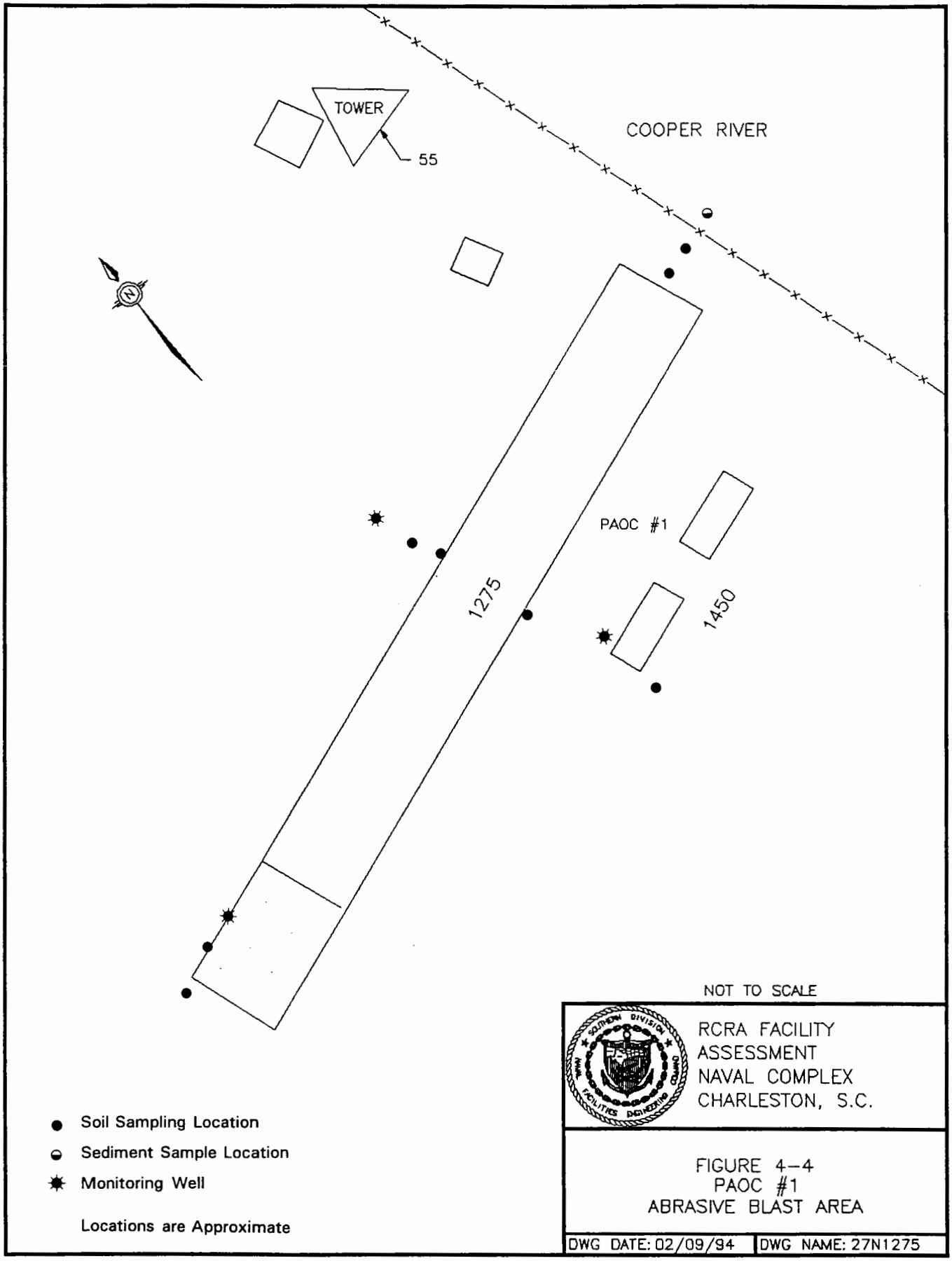
TOWER
55
COOPER RIVER
PAOC #1
1275
1450
NOT TO SCALE
RCRA FACILITY
ASSESSMENT
NAVAL COMPLEX
CHARLESTON, S.C.
Soil Sampling Location
Sediment Sample Location
Monitoring Well
Locations are Approximate
FIGURE 4-4
PAOC #1
ABRASIVE BLAST AREA
DWG DATE: 02/09/94
DWG NAME: 27N1275

Slab 1275. Both SOUTHNAVFACENGCOM and SCDHEC have identified the abrasive blasting operation as an uncontrolled emissions source of particulates and volatile organic compounds into the air.

4.4.4 Evidence of Release

The recent EBS indicated that several spills from the abrasive blasting area have been reported (notably from Slab 1275). A preliminary review of analytical results from soil boring and monitoring well (see Figure 4-4) samples indicate that essentially no organic constituents are present in the soil immediately surrounding the concrete slab or in groundwater immediately north and south of the slab. Concentrations of inorganic constituents (e.g., copper, mercury, nickel, zinc) in soil or groundwater suggest a possible release.

4.4.5 Exposure Potential

Considering the location of the former abrasive blasting area within the Charleston Naval Complex, human exposures are limited to workers and occasionally users of the Cooper River. The EBS identified an estimated 1.5 acres of wetland habitat approximately 250 feet north of Slab 1275. Under appropriate conditions (particularly wind direction and velocity) those wetlands could have been impacted by surface spills or airborne particulates or volatile organics.

4.4.6 Recommended Action

Due to the evidence of past releases and lack of a thorough assessment of the potential hazards associated with these releases, a RFI is recommended. Considering the similarity in operations and wastes associated with Slab 1275 and the surrounding abrasive blasting area, segregation of the impact of the units is impractical. Therefore, expanding the RFI for SWMU #21 to integrate PAOC #1 is also recommended.

4.5 PAOC #2 — Blast Area in Drydock #3

4.5.1 Unit Characteristics

PAOC #2 is a blast area in the vicinity of Drydocks (DD) 3 and 4. The blast area is outside and consists of an asphalt and concrete base. Temporary structures are erected using scaffolding and herculite to contain blast material. The area is now paved; before paving, the area was graded and covered with rock. Few jobs are done each year and the resulting abrasive blast waste is very small (approximately 3 containers/year). Steel grit and sodium bicarbonate are the reported materials used for all the dry dock abrasive blasting. Figure 1-1 locates Drydocks 3 and 4 within the Charleston Naval Complex. Figure 4-5 locates the blast area in relation to the drydocks.

4.5.2 Waste Characteristics

Blasting wastes possibly containing paint, organic solvent, and metallic residues.

4.5.3 Migration Pathways

Soil, groundwater, surface water (the Cooper River is approximately 150 feet from the blast area), sediment, and air are all potential migration pathways. It has been estimated that 24.0866 pounds/hour (25.0500 tons/year) of actual particulate matter are emitted from all drydock abrasive blasting activities.

4.5.4 Evidence of Release

Sand blasting wastes from all Charleston Navy Yard operations were sampled on October 24, 1980 and analyzed to determine EP toxicity. The range of analytical results is as follows: cadmium (<0.01 - 0.02 ppm), chromium (0.02 - 0.04 ppm), and lead (<0.1 - 1.1 ppm; from the sample collected from the active sandblasting area at Pier H.) The EP toxicity criteria for RCRA in 1980 was cadmium (1.0 ppm), chromium (5.0 ppm), and lead (5.0 ppm). The SCDHEC criteria in 1980 was cadmium (0.10 ppm), chromium (0.50 ppm), and lead (0.50 ppm).

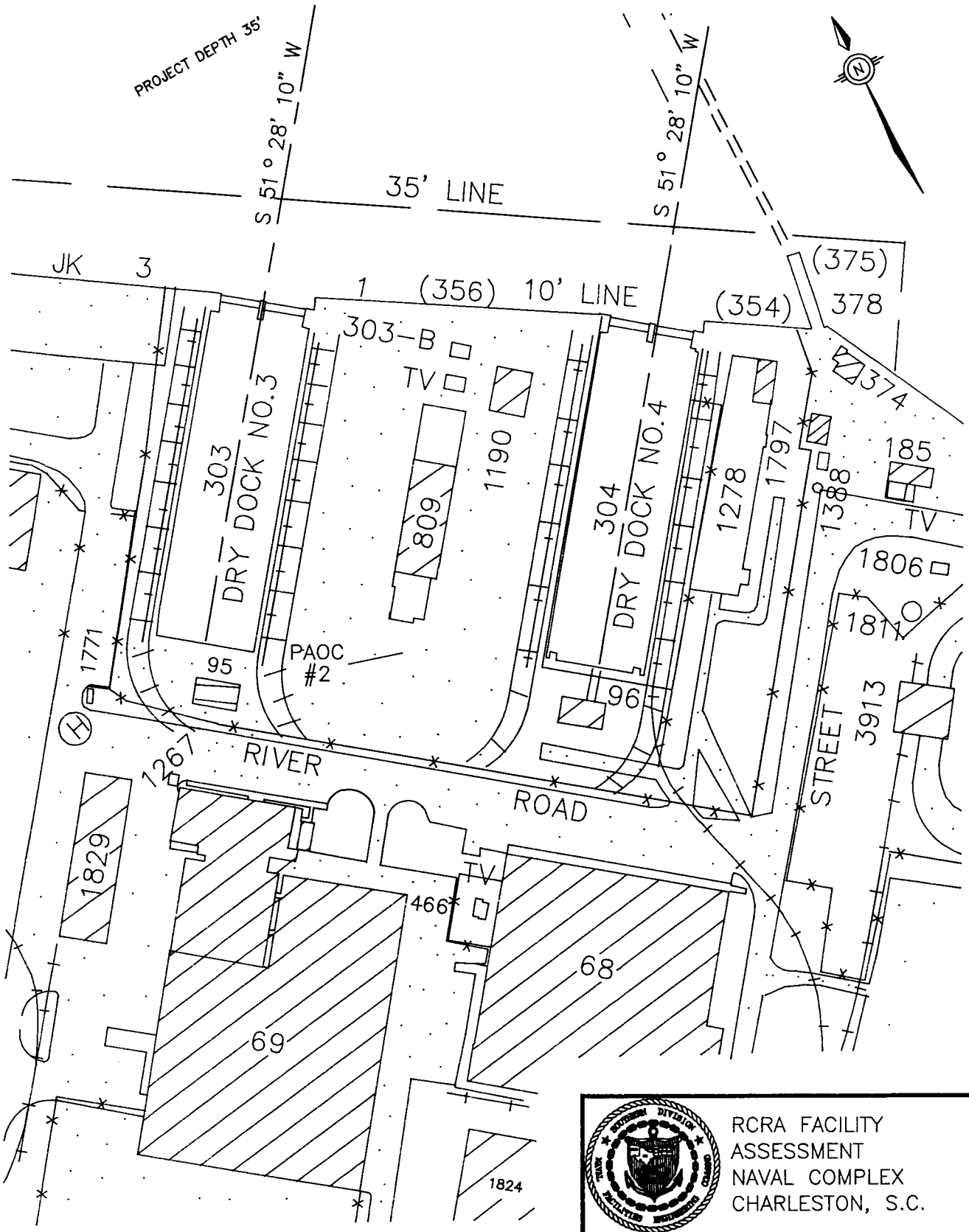

RCRA FACILITY
ASSESSMENT
NAVAL COMPLEX
CHARLESTON, S.C.

NOT TO SCALE

FIGURE 4-5
PAOC #2
BLAST AREA DRYDOCK NO 3

DWG DATE: 02/16/94 | DWG NAME: 29AOC2

The clay wall between DD 3 and 4 was sampled on June 2, 1989 and analyzed for flash point (>140F), total halogens (0.12 wt%), pH (7.00 @ 25°C), arsenic (<1.00 ppm), cadmium (<0.50 ppm), chromium (<1.00 ppm), and lead (<1.00 ppm).

Based on the waste characterization analysis, there is no evidence of a release related to the blast grit and paint residue.

4.5.5 Exposure Potential

The abrasive blasting area is not close to any residential areas but is near the Cooper River, a sensitive environment. Exposure to workers in the area may also occur. Based on available data, the materials present at this PAOC do not pose a threat to the environment.

4.5.6 Recommended Action

No further investigation of this PAOC is recommended due to the nature of the waste and the lack of evidence of a release from this unit.

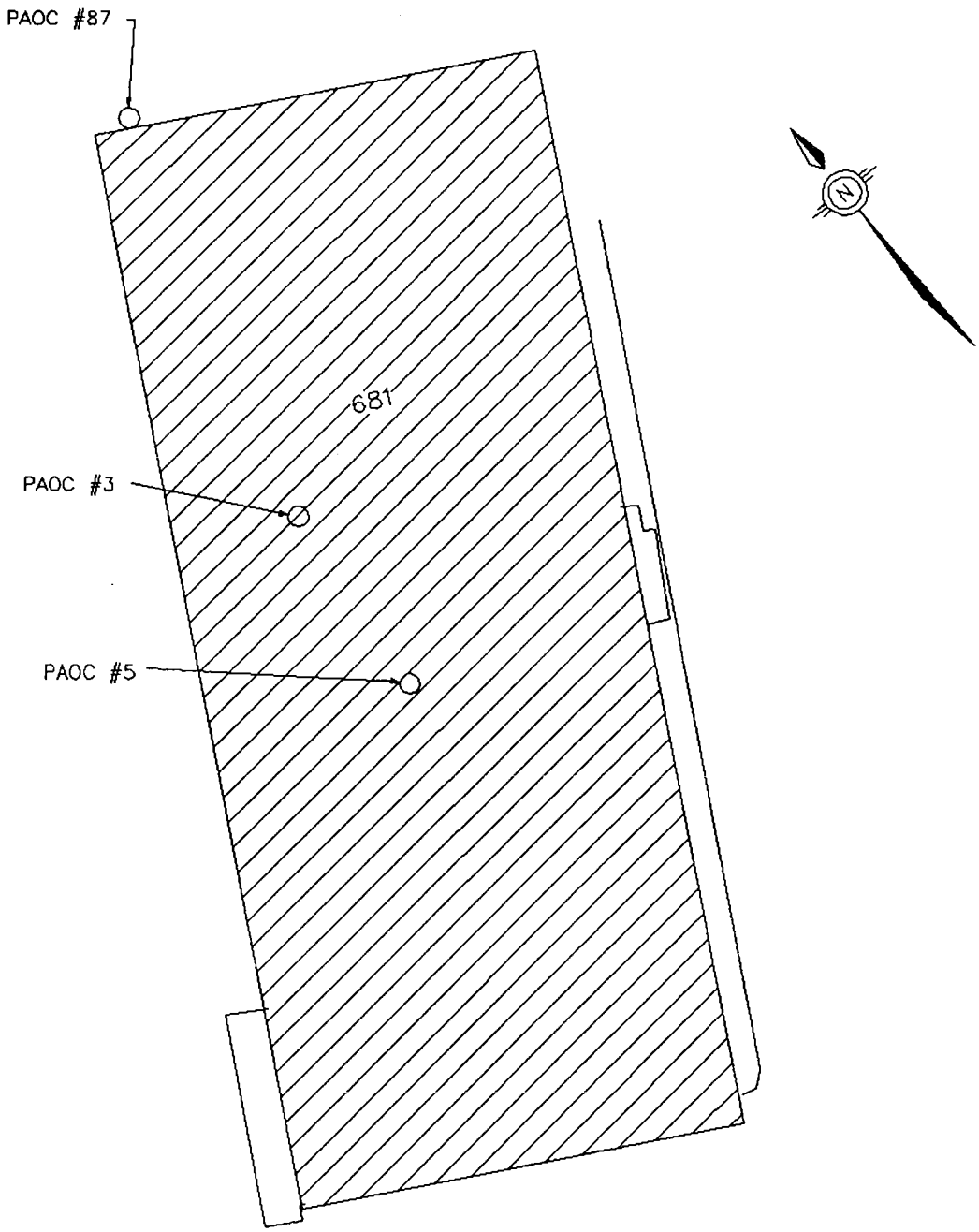

NOT TO SCALE

RCRA FACILITY
ASSESSMENT
NAVAL COMPLEX
CHARLESTON, S.C.

FIGURE 4-6
PAOC #3
BUILDING 681, BLAST BOOTH

DWG DATE: 02/12/94 | DWG NAME: 27S681

4.6.4 Evidence of Release

No spill reports, inspection reports, or employee interviews indicate the incidence of spills at this PAOC. However, some blast residue is evident in the area of the booth. SIMA safety personnel have indicated that the blasting booth and surrounding areas may be lead-contaminated as a result of paint removal operations.

4.6.5 Exposure Potential

This PAOC is not close to any residential areas or sensitive environments. The lack of evidence of a release and restricted migration pathways limits potential exposures to Naval Complex employees.

4.6.6 Recommended Action

There is no evidence of a release from this unit. However, confirmation sampling is recommended due to the nature of the waste and the design of the unit which may allow migration of any potential releases.

4.7 PAOC #4 — Paint Booth, Building 636

4.7.1 Unit Characteristics

PAOC #4 is a dry filter type paint spray booth used for automotive refinishing. The spray booth is included on the Bureau of Air Quality Permit Number 0560-0002, and is designated as company point ID Number 20. The spray booth was constructed in September of 1984.

There is a 22-foot high stack associated with the spray booth. The stack inside diameter is 3 feet. The stack exit gas velocity is 27,750 cfm. The spray booth is the only emissions generating point that exhausts from this stack. The stack is not equipped with continuous emission monitors; however, there is emission control equipment consisting of filters and tight seal. The particulate matter removal efficiency is 98 percent.

The normal operating schedule is 3 hours/day, 3 days/week, and 50 weeks/year (450 hours/year). All materials used are stored in 1-gallon containers.

Figure 1-1 locates Building 636 within the Charleston Naval Complex. Figure 4-7 locates the PAOC within Building 636.

4.7.2 Waste Characteristics

The following VOC-containing materials are used: lacquer thinner , all purpose thinner, reducer, reactive reducer, acrylic enamel reducer, and acrylic enamel.

4.7.3 Migration Pathways

Because this PAOC is located inside Building 636, soil, groundwater, and surface waters are unlikely pathways. The floor in the vicinity of this PAOC is free of cracks. The spray booth is a source of air emissions.

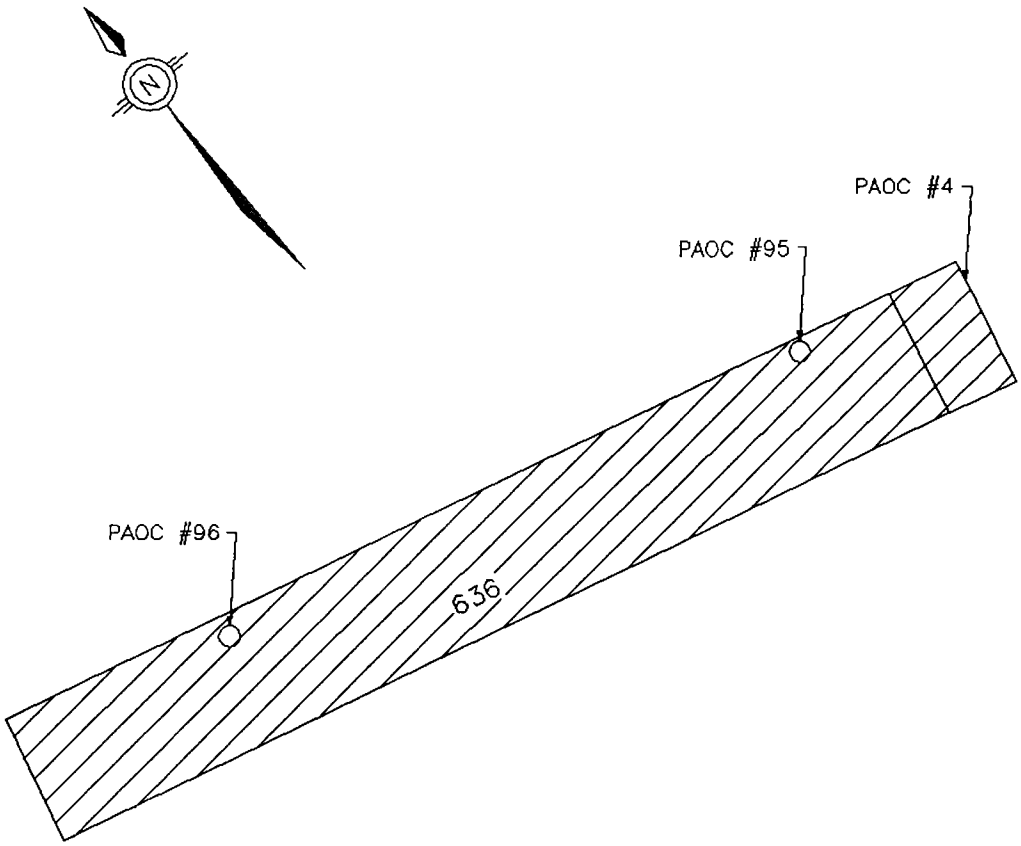

NOT TO SCALE

RCRA FACILITY
ASSESSMENT
NAVAL COMPLEX
CHARLESTON, S.C.

FIGURE 4- 7
PAOC #4
BUILDING 636, PAINT BOOTH

DWG DATE: 02/12/94 | DWG NAME: 27S636

4.7.4 Evidence of Release

No spill reports, inspection reports, or employee interviews indicate spills at this PAOC. However, paint overspray in the vicinity of the spray booth is evident. Paint stripper odors are also noticeable near the spray booth. The following air emission data are available for the spray booth:

TOTAL ACTUAL EMISSIONS PAOC #4			
Material Type	VOC (lbs/hr; tpy)	PM (lbs/hr; tpy)	HAP (lbs/hr; tpy)
Thinner 1	3.19; 0.72	0.00; 0.00	1.60; 0.34
Thinner 2	2.60; 0.58	0.00; 0.00	1.12; 0.26
Reducer 1	1.60; 0.36	0.00; 0.00	0.64; 0.14
Reducer 2	2.12; 0.48	0.08; 0.00	1.12; 0.25
Reducer 3	4.19; 0.94	0.00; 0.00	0.63; 0.14
Enamel 1	4.22; 0.95	0.02; 0.004	2.87; 0.65

Notes:
VOC — Volatile Organic Compound
PM — Particulate Matter
HAP — Hazardous Air Pollutant
tpy — ton per year

4.7.5 Exposure Potential

This PAOC is not close to any residential areas or sensitive environments. The lack of evidence of a release and restricted migration pathways limits potential exposures to Charleston Naval Complex employees.

4.7.6 Recommended Action

No further investigation of this PAOC is recommended due to the lack of evidence of a release from this unit, and limited migration pathways.

4.8 PAOC #5 — Spray Booth, Building 681

4.8.1 Unit Characteristics

PAOC #5 is a Devil Bliss Water Wash wet spray booth used by SIMA. The spray booth, installed in 1992, is included on the Bureau of Air Quality Control Permit Number 0560-0002, and is identified as company point ID Number 16. Figure 1-2 locates Building 681 within the Charleston Naval Complex. Figure 4-8 locates the PAOC within Building 681.

The spray booth has a maximum design rate of 125 cubic feet/minute air flow, and a normal operating rate of not more than 25% vapor. Dry filters are used to remove particulate matter from the air before being discharged through a ventilation stack.

The normal operating schedule is 6 hours/day, 5 days/week, and 52 weeks/year (1560 hours/year). The dry filters are replaced on a yearly or as-needed basis, and are disposed of as hazardous waste. On 1-26-94, PAOC #5 was observed to be in good condition, although some minor paint spills were present.

4.8.2 Waste characteristics

According to Permit Number 0560-0002, the following VOC-containing materials are associated with PAOC #5: epoxy 150, 151, and 152; enamel white, gray, and deck gray; epoxy 1, 2, and 3; enamel 1; naphtha; and butyl alcohol.

4.8.3 Migration Pathways

Because this PAOC is located inside a building, no migration potential is expected. The spray booth is, however, a source of air emissions.

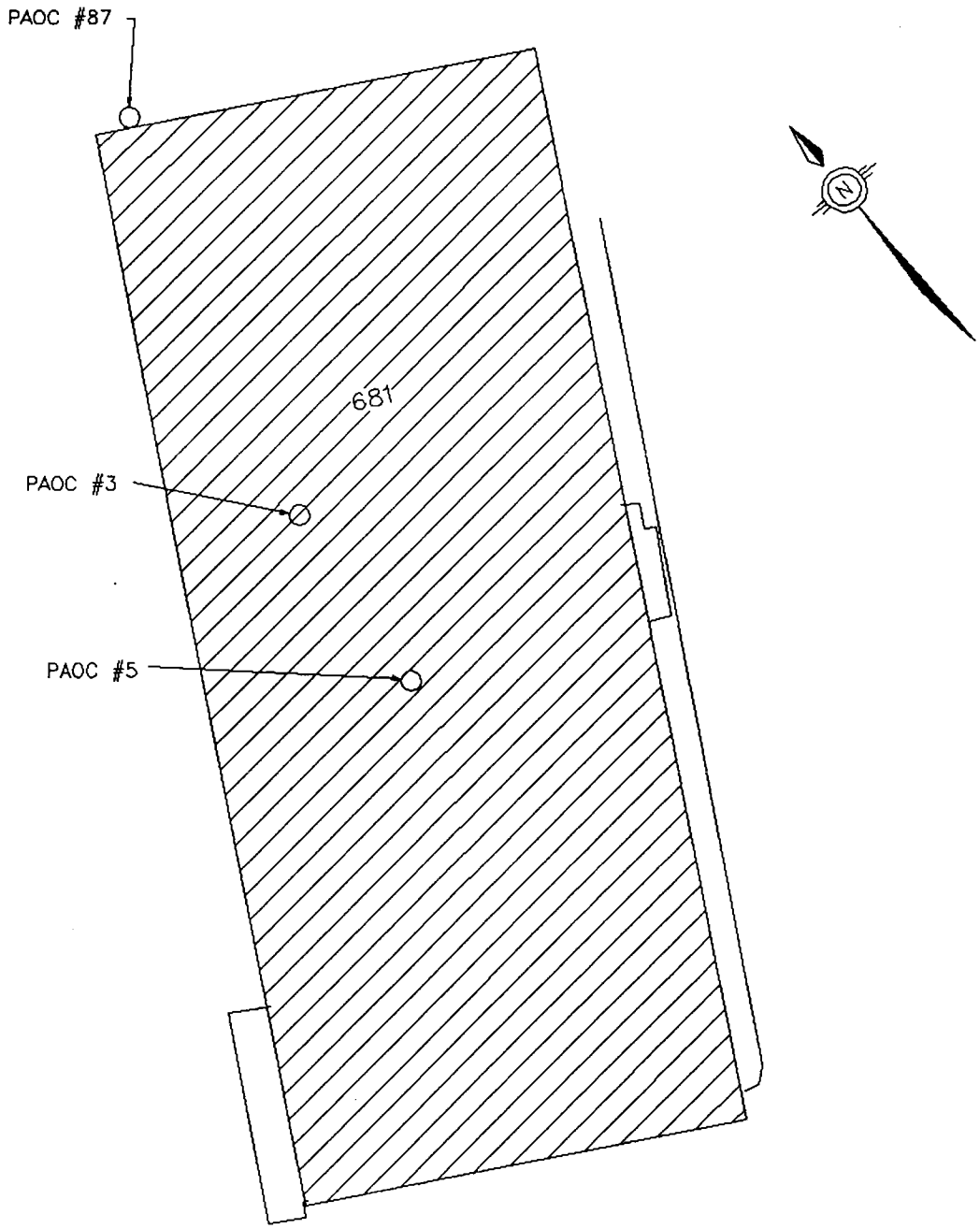

NOT TO SCALE

RCRA FACILITY
ASSESSMENT
NAVAL COMPLEX
CHARLESTON, S.C.

FIGURE 4-8
PAOC #5
BUILDING 681, SPRAY BOOTH

DWG DATE: 02/12/94 | DWG NAME: 27S681

4.8.4 Evidence of Release

No spill reports, inspection reports, or employee interviews indicate the incidence of spills at this PAOC. The booth area, however, has overspray on the floor, walls, and ceiling. There are minor paint spills (less than one gallon) in the mixing area.

A liquid sample was collected from the spray booth in April 1991 and analyzed for pH (6.64 @ 21°C) and total organic halogen (194 ppb).

4.8.5 Exposure Potential

This PAOC is not close to any residential areas or sensitive environments. The lack of evidence of a release and the restricted migration pathways (air emissions) limit the potential exposures to Charleston Naval Complex employees.

4.8.6 Recommended Action

No further investigation of this PAOC is recommended due to the lack of evidence of a release from this unit and limited migration pathways.

4.9 PAOC #6 — Coating and Spray System, Building 2A

4.9.1 Unit Characteristics

PAOC #6 is the coating and spray system located in Building 2A. The Binks Waterwash coating booth is used for aluminum coating through a flame spray painting system. The exhaust stack is 58 feet high and 3 feet in diameter. Figure 1-1 locates Building 2A within the Charleston Naval Complex. Figure 4-9 locates the PAOC in Building 2A.

The coating system was installed in 1989 and is seldom used (2 or 3 times/year). The spray booth operates under Bureau of Air Quality Control Permit number 0560-0002, point ID number 62. Materials and usage information was unavailable. During a February 1, 1994 site survey, small amounts of aluminum debris were observed in the area.

4.9.2 Waste Characteristics

Information specific to the wastes generated by this PAOC was unavailable.

4.9.3 Migration Pathways

Because PAOC #6 is located inside Building 2A, soil, groundwater, and surface water migration is unlikely. This PAOC is a source of air emissions.

4.9.4 Evidence of Release

No spill reports, inspection reports, employee interviews, or visual observation indicate the incidence of spills at this PAOC.

4.9.5 Exposure Potential

This PAOC is not close to any residential areas but is approximately 500 feet west of the Cooper River. The nature of operations at PAOC #6 minimizes potential exposures to Charleston Naval Complex employees.

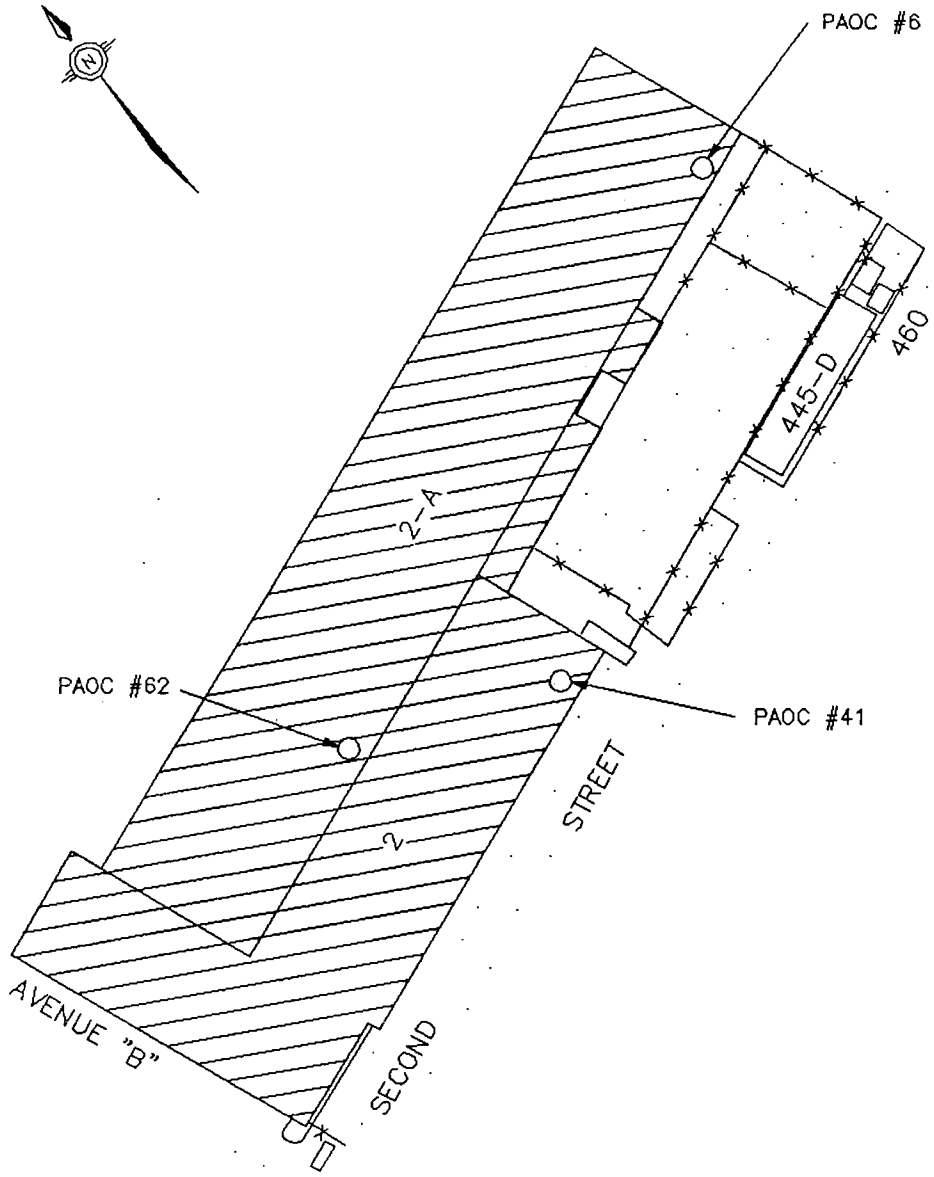

NOT TO SCALE

RCRA FACILITY
ASSESSMENT
NAVAL COMPLEX
CHARLESTON, S.C.

FIGURE 4-9
PAOC #6
BLDG 2A, COATING AND SPRAY SYS

DWG DATE: 02/10/94 | DWG NAME: 27N2A

4.9.6 Recommended Action

Due to the lack of a thorough assessment of the potential hazards associated with this PAOC, a RFI is recommended.

4.10 PAOC #7 — Surface Coating Operations, Building 3

4.10.1 Unit Characteristics

PAOC #7 comprises three small surface coating operations primarily used for valves and components. Two of the booths are dry filter type operations while the third is and electrostatic epoxy spray booth used with a curing oven fueled by natural gas. The systems are reportedly not in service at this time. Figure 1-1 locates Building 3 within the Charleston Naval Complex. Figure 4-10 locates the PAOC within Building 3.

According to a March, 1992 report, only one of the dry filter type booths had been installed with the dimensions of 15'x20'x7. Of the three listed, only the epoxy booth was operational. The epoxy booth had apparently been operational since 1990, indicated by date the system's curing/paint bake oven was installed. Based on the 1992 report, the remaining two paint spray booths have operated less than 3 years.

Review of a September 2, 1983 memorandum suggests the presence of an earlier paint spray booth in Building 3. Particulate matter in this spray booth was controlled by a water-spray curtain. Reportedly, the maximum amount of paint sprayed per day, including thinner and primer, was 5 gallons. No further information regarding this booth could be found.

4.10.2 Waste Characteristics

Review of historic hazardous materials inventories suggests that paint waste was generated by the two paint spray booths at PAOC #7. No other information was available.

4.10.3 Migration Pathways

Because PAOC #7 is located inside Building 242, soil, groundwater, and surface water migration is unlikely.

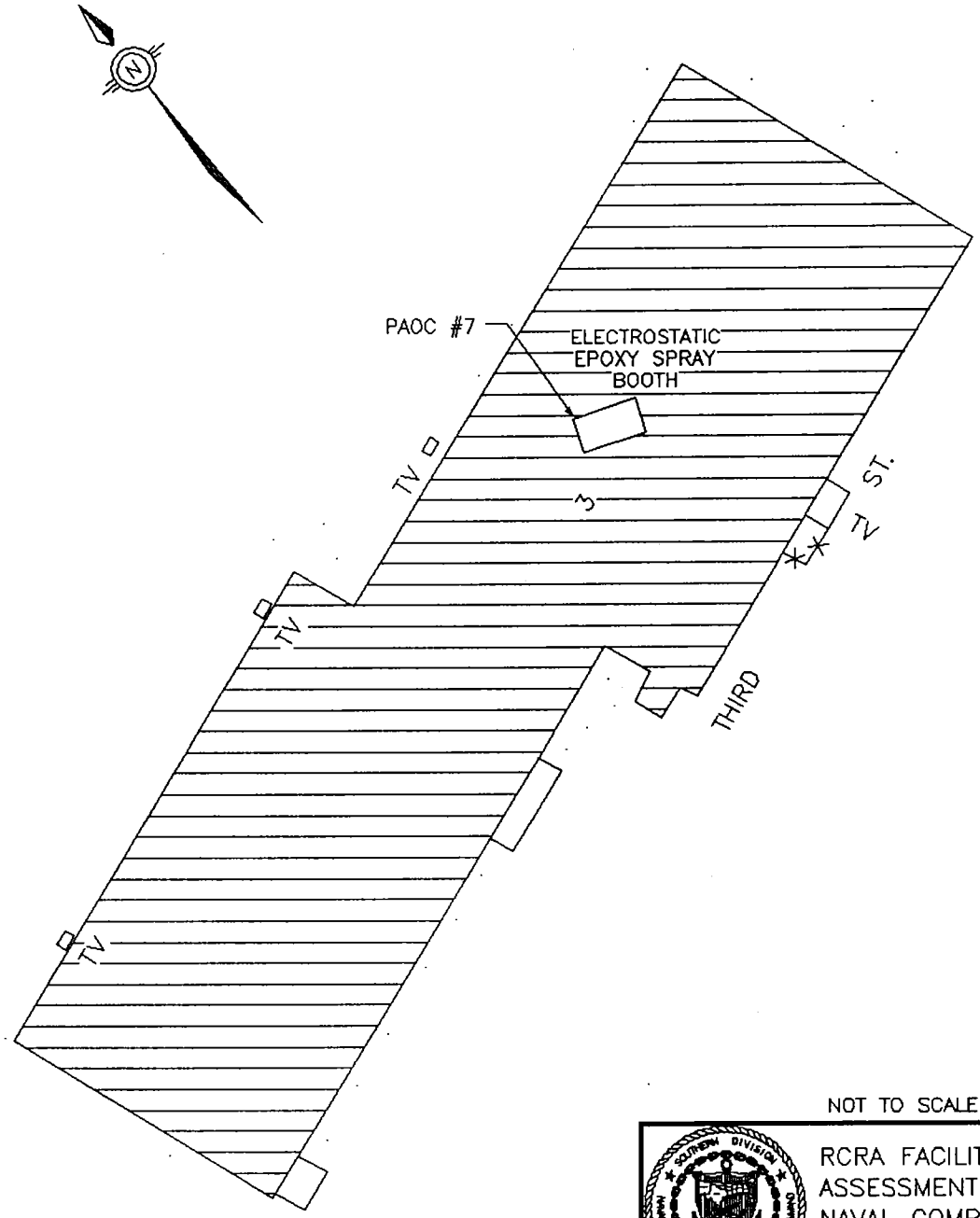

NOT TO SCALE

RCRA FACILITY
ASSESSMENT
NAVAL COMPLEX
CHARLESTON, S.C.

FIGURE 4-10
PAOC #7
BUILDING 3, SURFACE COATING

DWG DATE: 02/09/94 | DWG NAME: 27N3

4.10.4 Evidence of Release

No spill reports, inspection reports, employee interviews, or visual observations indicate spills at this PAOC.

4.10.5 Exposure Potential

This PAOC is not close to any residential areas or sensitive environments. The limited storage capacity and migration pathways restrict the potential exposures to Charleston Naval Complex employees.

4.10.6 Recommended Action

No further investigation of this PAOC is recommended due to lack of evidence of a release from this unit and limited migration pathways.

4.11 PAOC #8 — Paint Booth, Building 25

4.11.1 Unit Characteristics

PAOC #8 is a small, dry filter type paint booth located within Building 25. Figure 1-1 locates Building 25 within the Charleston Naval Complex. Figure 4-11 locates the PAOC within Building 25.

This unit is used primarily for furniture refinishing, using enamel paint and thinners. An emissions inventory indicates that approximately 80 percent of the coatings performed at PAOC #8 are applied by brush and the remainder is applied by spray. PAOC #8 is located on a concrete surface and was observed to be in good condition.

4.11.2 Waste characteristics

According to the site survey performed on January 25, 1994, no waste is stored at PAOC #8. Although brush application is primarily utilized, some amount of overspray is likely to occur during paint/thinner spraying activities.

4.11.3 Migration Pathways

Since PAOC #8 is an indoor paint booth, soil and groundwater migration is not expected. Although airborne constituents are also produced from this process, it is expected that the filter, if properly maintained, significantly reduces the amount of paint material released to the environment. Also, 80 percent of the material applied at this location is applied using a brush, thereby significantly reducing the potential for paint and paint products becoming airborne. Therefore, the potential for airborne migration of contaminants is limited.

4.11.4 Evidence of Release

No spill reports, inspection reports, employee interviews, or visual observation indicate the incidence of spills at this PAOC.

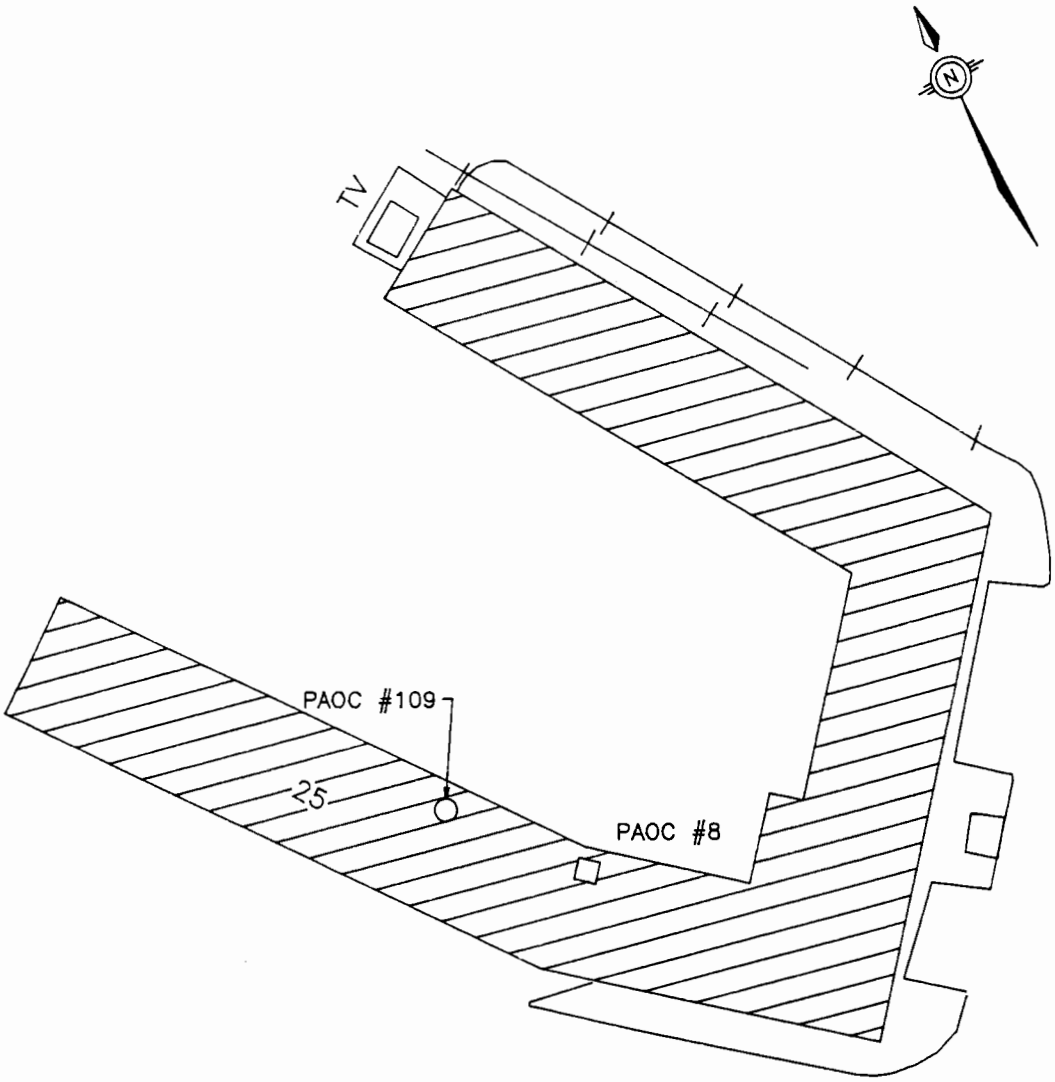

NOT TO SCALE

RCRA FACILITY
ASSESSMENT
NAVAL COMPLEX
CHARLESTON, S.C.

FIGURE 4-11
PAOC #8
BUILDING 25, PAINT BOOTH

DWG DATE: 02/16/94	DWG NAME: 29AOC109

4.11.5 Exposure Potential

This PAOC is not close to any residential areas or sensitive environments. The nature of the spraying operations limit the potential exposures to Naval Complex employees.

4.11.6 Recommended Action

Based on available information, no further investigation of this POAC is recommended due to the lack of evidence of a release from this unit and limited migration pathways.

4.12 PAOC #9 — Paint Booths, Building 177

4.12.1 Unit Characteristics

PAOC #9 is made up of four small paint booths. The four booths are included in the Bureau of Air Quality Control Permit Number 0560-0002, and are designated as company point ID numbers 31 (dry filter type booth used to paint electrical motors), 32 (dry filter type booth located on the second floor in the switchboard section; only aerosol paint cans are used), 33 (wet filter type booth located on the third floor used to paint miscellaneous metal parts), and 34 (wet filter type booth used to spray ship antennae). Figure 1-1 locates Building 177 within the Charleston Naval Complex. Figure 4-12 locates the PAOC within Building 177.

Booth 31 (20'x 9'x 10') has a 41-foot high stack with a 3-foot diameter. Booth 32 (5'x 3'x 4') has a 34-foot high stack with a 2-foot diameter. Booth 33 (12'x 14'x 8') has a 15-foot high stack with a 3.5-foot diameter and a water curtain used to capture paint particulates. Booth 34 (23'x 27'x 20') has a 50-foot high stack with a 2-foot diameter. None of the stacks is equipped with continuous emission monitors. Each Booth is the only emissions generating point that exhausts from their respective stack.

Booth 31 has a normal operating schedule of 5 hours/day, 5 days/week, and 52 weeks/year (1300 hours/year); Booth 32 has a normal operating schedule of four hours/day, 5 days/week, and 52 weeks/year (1040 hours/year); Booth 33 has a normal operating schedule of 3 hours/day, 5 days/week, and 52 weeks/year (780 hours/year); and Booth 34 has a normal operating schedule of 4 hours/day, 5 days/week, and 52 weeks/year (1040 hours/year).

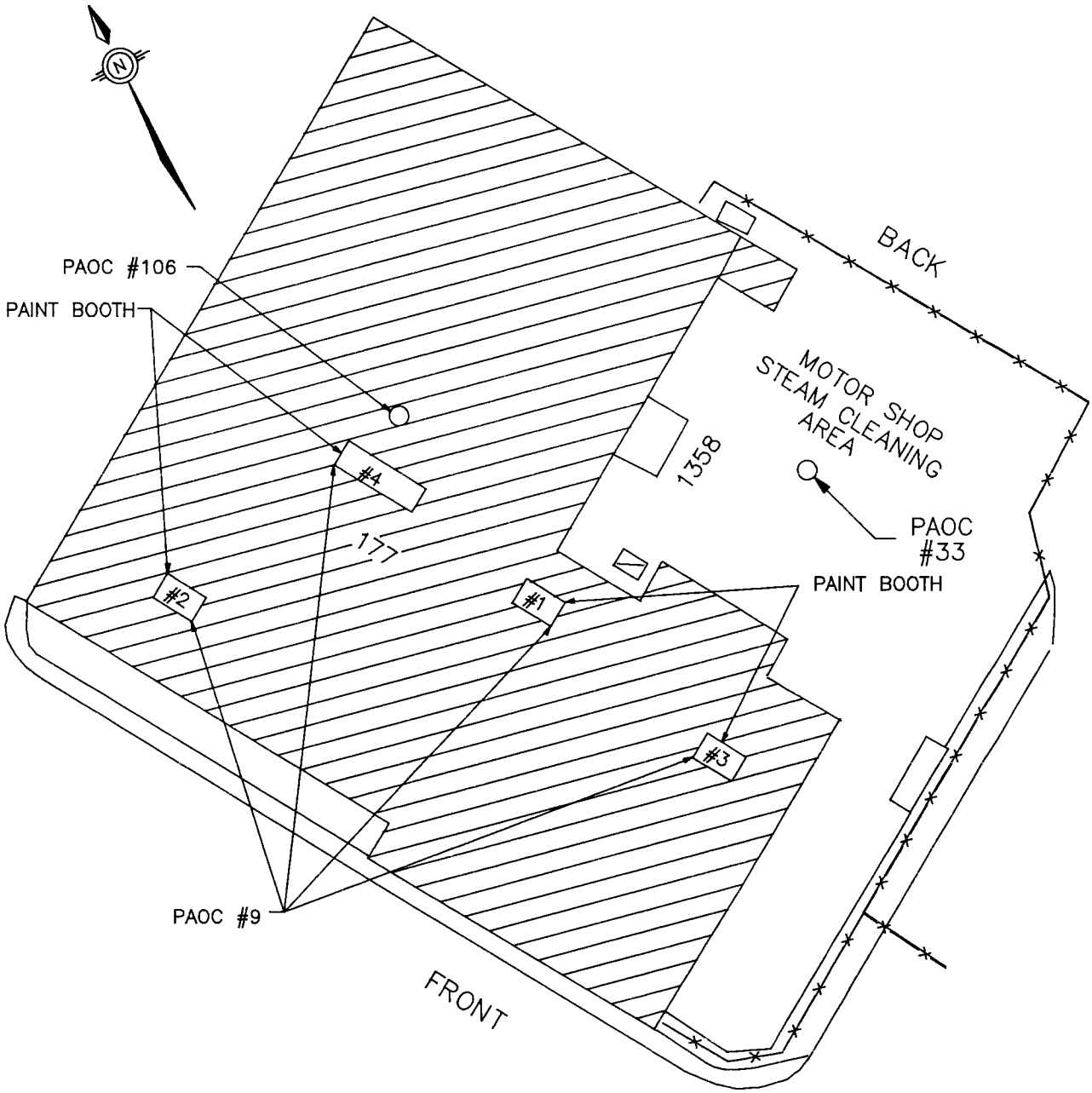

NOT TO SCALE

RCRA FACILITY
ASSESSMENT
NAVAL COMPLEX
CHARLESTON, S.C.

FIGURE 4–12
PAOC #9
BUILDING 177, PAINT BOOTHS

DWG DATE: 02/16/94 | DWG NAME: 29AOC9

4.12.2 Waste characteristics

Booth 31 uses enamel, primer, and thinner. Booth 32 uses spray lacquer, spray enamel, and spray primer. Booth 33 uses enamel, primer, and thinner. All types of paints (i.e. lead, zinc chromate, etc.) are used at Booth 33. Booth 34 uses enamel, primer, and thinner. The major constituents of concern are volatile organic compounds and metals. The water curtain at Booth 33 is drained periodically to the sanitary sewer system, and the sludge is removed and disposed of as hazardous waste according to 40 CFR 260.

4.12.3 Migration Pathways

Because PAOC #9 is located inside Building 177, soil and groundwater are unlikely pathways. Surface water is a potential pathway since the water curtain system at Booth 33 is drained periodically to the sanitary sewer system. The four spray booths are also sources of air emissions. The following are air emission data for the four booths:

TOTAL ACTUAL EMISSIONS PAOC #9			
Material Type	VOC (lbs/hr; tpy)	PM (lbs/hr; tpy)	HAP (lbs/hr; tpy)
Booth 31			
Enamel	0.420/0.060	0.024/0.004	0.0000/0.0000
Primer	0.240/0.040	0.001/0.000	0.2385/0.0358
Thinner	0.790/0.120	0.000/0.000	0.0793/0.0119
Booth 32			
Spray Lacquer	0.960/0.500	0.000/0.000	0.4327/0.2250
Spray Enamel	1.380/0.720	0.002/0.001	0.6154/0.3200
Spray Primer	1.370/0.710	0.001/0.001	0.2885/0.1500

TOTAL ACTUAL EMISSIONS PAOC #9			
Material Type	VOC (lbs/hr; tpy)	PM (lbs/hr; tpy)	HAP (lbs/hr; tpy)
Booth 33			
Enamel	1.160/0.140	0.057/0.007	0.0000/0.0000
Primer	0.110/0.010	0.012/0.001	0.0000/0.0000
Thinner	0.920/0.110	0.006/0.001	0.0000/0.0000
Booth 34			
Enamel	0.930/0.300	0.046/0.015	0.0000/0.0000
Primer	0.110/0.040	0.012/0.004	0.0000/0.0000
Thinner	0.450/0.150	0.003/0.001	0.0000/0.0000

Notes:
VOC — Volatile Organic Compound
PM — Particulate Matter
HAP — Hazardous Air Pollutant
tpy — ton per year

4.12.4 Evidence of Release

No spill reports, inspection reports, or employee interviews indicate spills at this PAOC. Prior to the installation of the sanitary/industrial wastewater sewer system in 1972, however, the water used to capture paint dust from the paint spray booths was discharged directly to the Cooper River. During the site survey, paint fumes were also evident at Booth 33.

4.12.5 Exposure Potential

This PAOC is not close to any residential areas or sensitive environments. The lack of evidence of a release and the restricted migration pathways limit the potential exposures to Charleston Naval Complex employees.

4.12.6 Recommended Action

No further investigation of this POAC is recommended due to operating practices, lack of evidence of a release from this unit, and limited migration pathways.

4.13 PAOC #10 — Paint Booth, Building 187

4.13.1 Unit Characteristics

PAOC #10 is a small dry filter type paint booth within Building 187. It is included in Bureau of Air Quality Control Permit Number 0560-0002. The paint booth has a concrete floor. Enamel paint is the primarily used by the paint booth. The booth receives minimal use, predominantly brush applications. Figure 1-1 locates Building 187 within the Charleston Naval Complex. Figure 4-13 locates the PAOC within Building 187.

4.13.2 Waste Characteristics

Paints used at PAOC #10 include enamel 5, gray enamel aerosol, lacquer white aerosol, yellow enamel aerosol, blue enamel aerosol, gray 26187 TT-E-490, gray 26373 TT-E-529F, enamel, formula 150 epoxy, lacquer, latex, and vinyl. All of these paints are RCRA Hazardous Waste Number D001, with except for latex, which is RCRA Hazardous Waste Number 6666. Solvents/thinners used at PAOC #10 include methyl ethyl ketone and naphtha (RCRA Hazardous Waste Number F005), and methyl isobutyl ketone (RCRA Hazardous Waste Number F003).

4.13.3 Migration Pathways

Because this PAOC is located inside Building 187, soil, groundwater, and surface waters are unlikely pathways. The floor in the vicinity of this PAOC is free of cracks. The primary migration potential is by evaporation of solvents. Although the volume of air emissions has not been quantified, it is expected to be minimal due to limited use of the paint booth.

4.13.4 Evidence of Release

No spill reports, inspection reports, or employee interviews indicate spills at this PAOC.

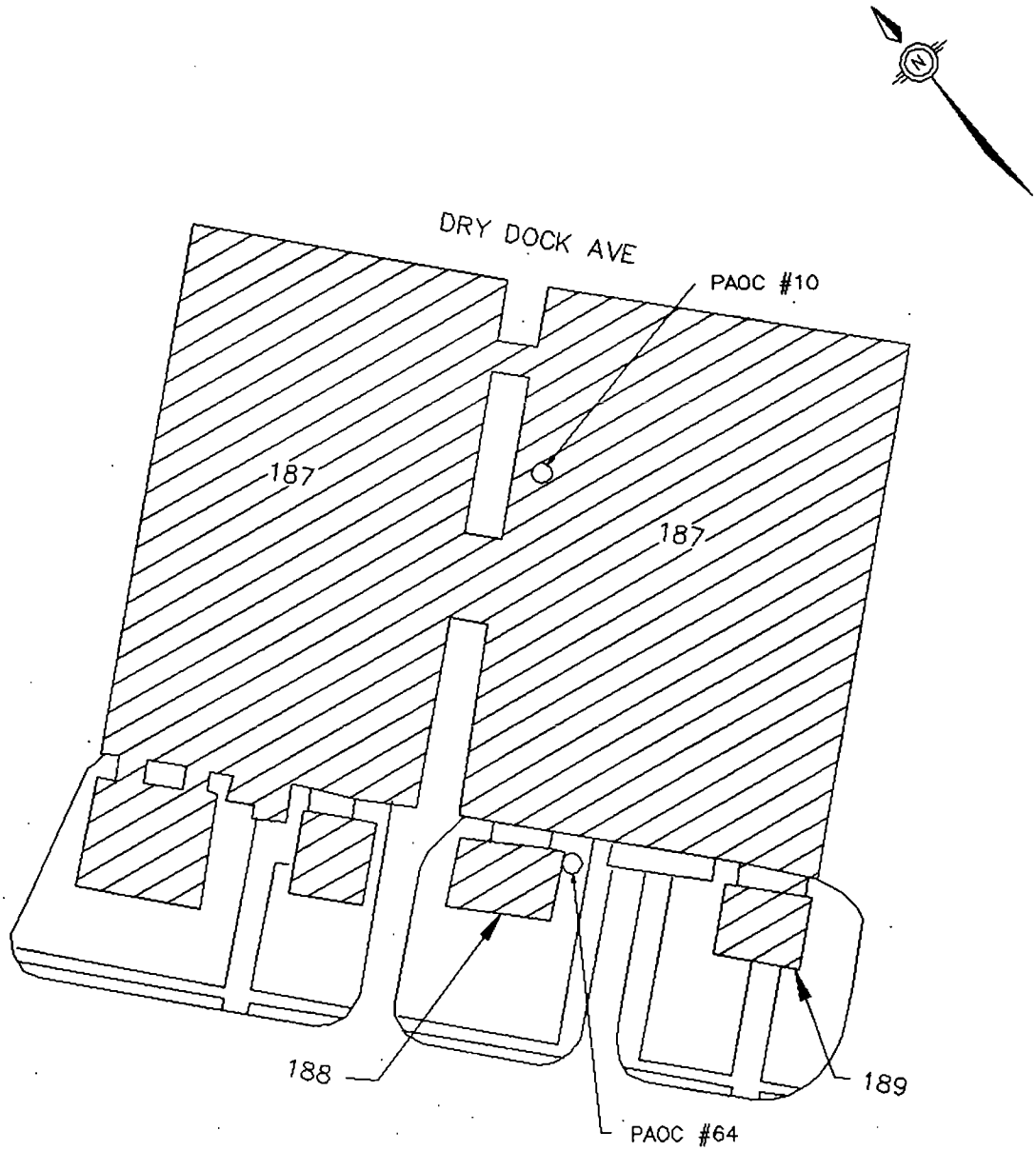

NOT TO SCALE

RCRA FACILITY
ASSESSMENT
NAVAL COMPLEX
CHARLESTON, S.C.

FIGURE 4-13
PAOC #10
BUILDING 187, PAINT BOOTH

DWG DATE: 02/10/94 | DWG NAME: 27N187

4.13.5 Exposure Potential

This PAOC is not close to any residential areas or sensitive environments. Because this PAOC is inside and there is a lack of evidence of a major release, the potential exposures are limited to Charleston Naval Complex employees.

4.13.6 Recommended Action

No further investigation of this PAOC is recommended due to the lack of evidence of a release from this unit and limited migration pathways.

4.14 PAOC #11 — Paint Area, Building 212

4.14.1 Unit Characteristics

PAOC #11, located in Building 212, was previously used for open spraying of ship components, primarily using epoxy and anti-fouling applications. Figure 1-1 locates Building 212 within the Charleston Naval Complex. Figure 4-14 located the PAOC within Building 212.

PAOC #11 has been associated with the paint shop since 1974 but is no longer operational. Two types of metallic paint were used: a lead-based primer and a copper-containing bottom paint, which are typical of paints used as steel primers and bottom paints. A total of 3,000 gallons of paint was used each month in paint shop operations. Two water curtain spray booths were also operated at the paint shop.

The open spray area probably began operation in 1974 when the paint shop moved into Building 212. The area, however, is no longer in use and the date of its decommission is unknown. No record of process closure procedures were found.

4.14.2 Waste Characteristics

Approximately 226 tons of paint wastes and solvents reportedly were generated annually by the paint shop. In a 1986 inventory of hazardous wastes, the paint shop reportedly generated 8 to 10 British Barrels/year of waste paint and approximately 900 British Barrels/year of paint-related wastes. Anti-fouling operations may have involved the use of organotin- and tributytin-containing paints. These substances are both biocides and are considered toxic to the environment. Since the late 1960s, a private contractor disposed of all paint wastes, including paints, solvents, and paint sludge. When the water curtain apparatus was cleaned, approximately 1,000 pounds of paint sludge from the booth was collected and disposed of by a private contractor; the wastewater was discharged to the sanitary sewer. Prior to the 1960s, the paint sludge was disposed of in the base landfill. The wastewater was discharged into the Cooper

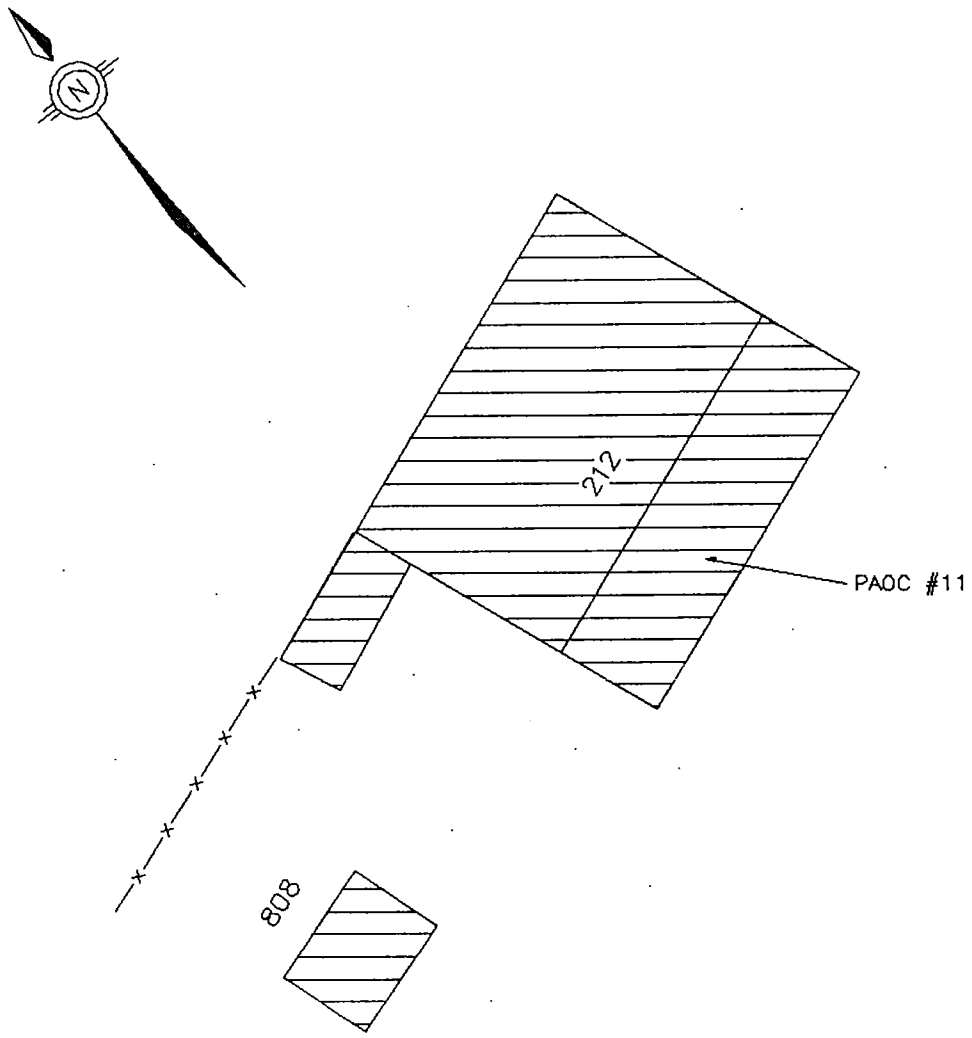

NOT TO SCALE

RCRA FACILITY
ASSESSMENT
NAVAL COMPLEX
CHARLESTON, S.C.

FIGURE 4-14
PAOC #11
BUILDING 212, PAINT AREA

DWG DATE: 02/09/94 | DWG NAME: 27N212

River before the installation of the sanitary sewer. The primary constituents of concern are volatile organic compounds, metals, and biocides.

4.14.3 Migration Pathways

Discharges have occurred to the Cooper River; therefore, soil, groundwater, and surface water are migration pathways. According to the 1992 Air Emissions Compliance Audit Report, actual VOC emissions from the surface coating operations were listed as: 0.85 tons/year Epoxy 5A, 0.65 tons/year Epoxy 5B, 0.05 tons/year anti-fouling material, 0.15 tons/year methyl isobutyl ketone, 1.24 tons/year naphtha, and 1.18 tons/year butyl alcohol.

4.14.4 Evidence of Release

No spill reports, inspection reports, employee interviews, or visual observations indicate spills at this PAOC.

4.14.5 Exposure Potential

Building 212 is located adjacent to military housing. The Cooper River is approximately 900 feet from Building 212. Discharges have occurred to the Cooper River.

4.14.6 Recommended Action

Due to past disposal practices and lack of a thorough assessment of the potential hazards associated with these releases, a RFI is recommended. Discharges to the Cooper River will be investigated as a separate unit.

4.15 PAOC #12 — Paint Booth, Building 218

4.15.1 Unit Characteristics

PAOC #12 is a dry filter type paint booth used to apply epoxy paints. This unit is included in the Bureau of Air Quality Control Permit Number 0560-0002 and designated as company point ID S17. Figure 1-1 locates Building 218 within the Charleston Naval Complex. Figure 4-15 locate the PAOC within Building 218.

The paint booth is located on a concrete surface in good condition.
The 25' x 8' x 15' paint booth is reported to operate 1000 hours per year. No break-down of the operating schedule was available. During a visual site inspection on February 4, 1994, paint residue was noted in the paint booth area.

4.15.2 Waste Characteristics

Materials used include Epoxy 5A and 5B, methyl ethyl ketone, butyl alcohol, naphtha, and Primer 3.

4.15.3 Migration Pathways

Because PAOC #12 is located inside Building 218, soil, groundwater, and surface water migration is unlikely. This paint booth is a source of air emissions, summarized below:

TOTAL ACTUAL EMISSIONS PAOC #12			
Material Type	VOC (lbs/hr; tpy)	PM (lbs/hr; tpy)	HAP (lbs/hr; tpy)
Epoxy 5A	0.41; 0.20	0.012; 0.006	0.0000; 0.0000
Epoxy 5B	0.31; 0.15	0.011; 0.006	0.0126; 0.0063
methyl ethyl ketone	0.02; 0.01	0.000; 0.000	0.0202; 0.0101
butyl alcohol	0.10; 0.05	0.000; 0.000	0.0000; 0.0000

TOTAL ACTUAL EMISSIONS PAOC #12			
Material Type	VOC (lbs/hr; tpy)	PM (lbs/hr; tpy)	HAP (lbs/hr; tpy)
naphtha	0.46; 0.23	0.000; 0.000	0.0000;0.0000
Primer 3	0.07; 0.03	0.000; 0.000	0.0404; 0.0202

Notes:
VOC — Volatile Organic Compound
PM — Particulate Matter
HAP — Hazardous Air Pollutant
tpy — ton per year

4.15.4 Evidence of Release

No spill reports, inspection reports, or employee interviews indicate spills at this PAOC. There is paint residue in the paint booth area.

4.15.5 Exposure Potential

Building 212 is not close to any residential areas. Building 218 is approximately 1200 feet from the Cooper River. Naval Complex employees may be exposed to air emissions from the paint spray booth activities.

4.15.6 Recommended Action

No further investigation of this PAOC is recommended due to limited exposure potential and limited migration pathways.

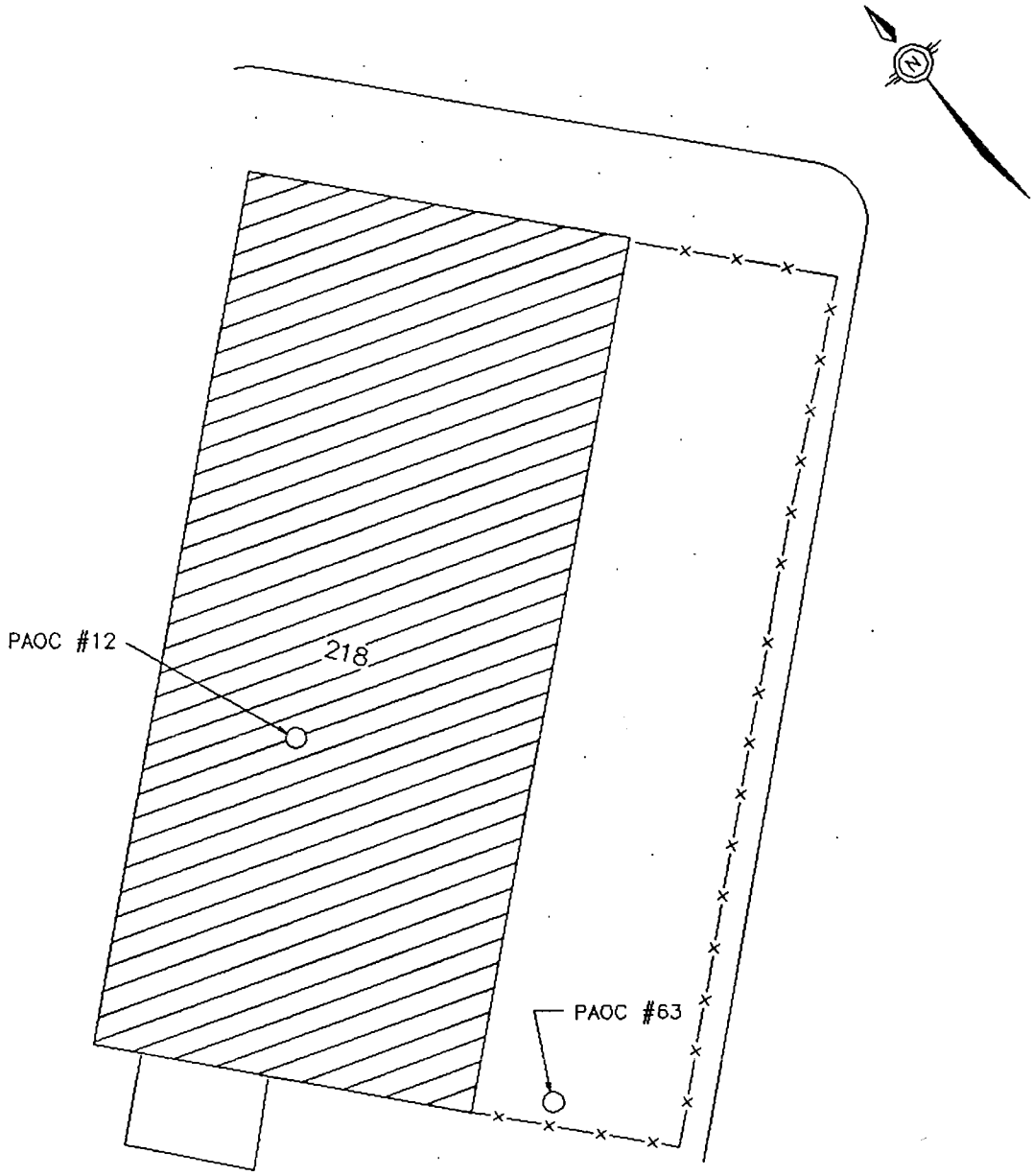

NOT TO SCALE

RCRA FACILITY
ASSESSMENT
NAVAL COMPLEX
CHARLESTON, S.C.

FIGURE 4-15
PAOC #12
BUILDING 218, PAINT BOOTH

DWG DATE: 02/10/94 | DWG NAME: 27N218

4.16 PAOC #13 — Paint Shop, Building 223

4.16.1 Unit Characteristics

PAOC #13 is made up of five dry filter type paint booths inside Building 223. The five booths are included in the Bureau of Air Quality Control Permit Number 0560-0002 and are designated as company point ID Numbers 35, 36 (located side-by-side; used primarily to paint miscellaneous parts), 37 (used to coat metal parts with "plastisol" material), 38 (used to paint fiberglass or plastic hard hats), and 63 (Teflon Coating Booth). Figure 1-1 locates Building 223 within the Charleston Naval Complex. Figure 4-16 locates the paint booths within Building 223.

Booth 35 (20' x 20' x 15') has a 15-foot high, 3-foot diameter stack. Booth 36 (32' x 20' x 15') has a 62-foot high, 3.75-foot diameter stack. Booth 38 (8' x 10' x 7') has a 12-foot high, 3-foot diameter stack. The exhaust from Booth 63 is 4 feet above ground.

The normal operating schedule of the booths varies from 2-6 hours/day, 1-5 days/week, and 52 weeks/year. The five spray booths are still operational.

4.16.2 Waste Characteristics

Booths 35 and 36 use enamel, primer, epoxy, butyl alcohol, naphtha, thinner, vinyl antifouling, and MIK. Booth 37 uses primer and methyl isobutyl ketone. Booth 38 uses enamel, epoxy, butyl alcohol, naphtha, and thinner. Booth 63 uses Teflon, enamel, epoxy, butyl alcohol, and naphtha.

4.16.3 Migration Pathways

Prior to the installation of the sanitary/industrial wastewater sewer system in 1972, water used to capture paint dust from the paint spray booths was discharged directly into the Cooper

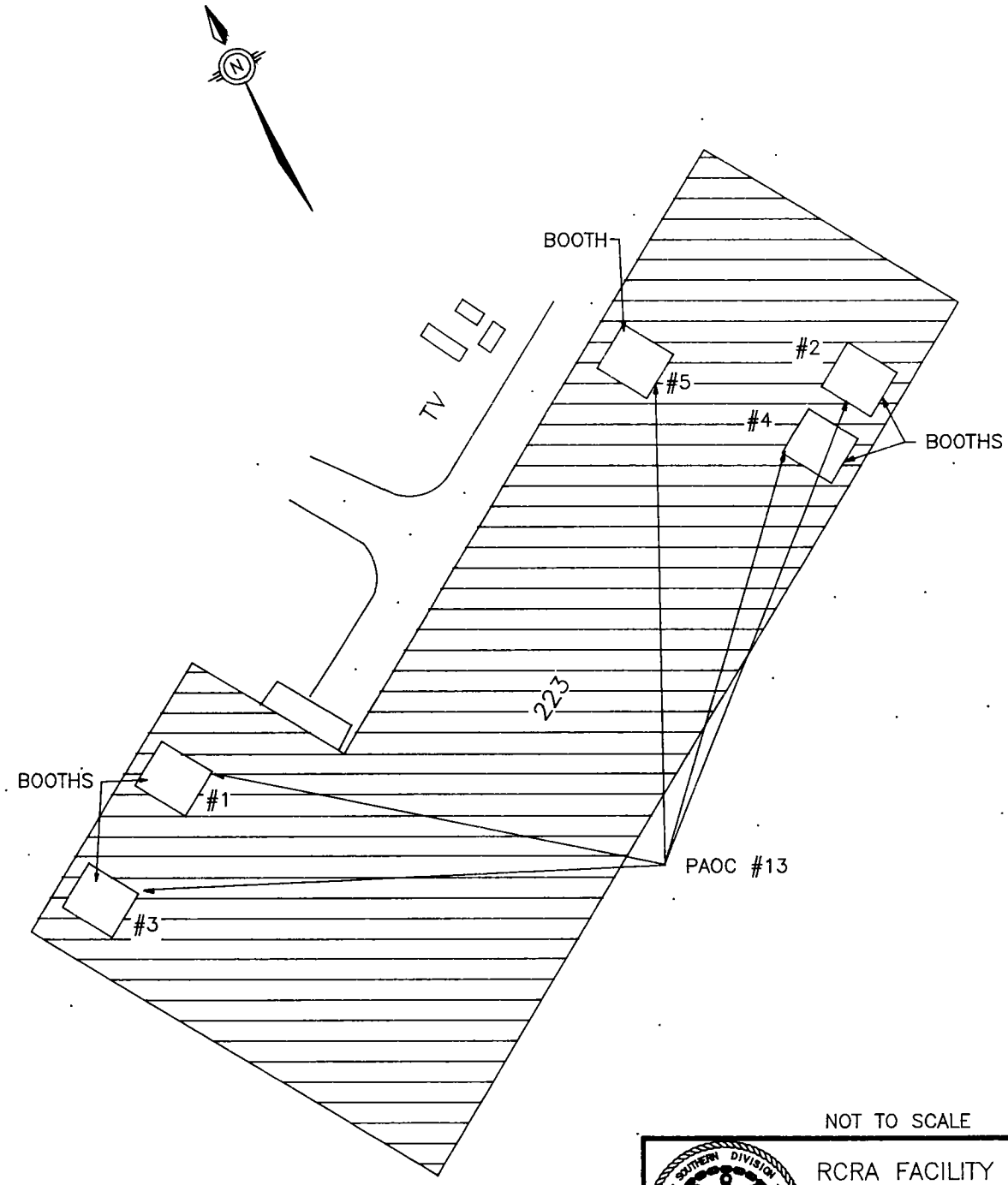

NOT TO SCALE

RCRA FACILITY
ASSESSMENT
NAVAL COMPLEX
CHARLESTON, S.C.

FIGURE 4–16
PAOC #13
BUILDING 223, PAINT BOOTHS

DWG DATE:02/16/94 | DWG NAME: 29AOC13

River. All five spray booths are sources of air emissions. Combined emissions for the five booths are tabulated below:

TOTAL ACTUAL EMISSIONS PAOC #13			
Material Type	VOC (lb/hr; tpy)	PM (lb/hr; tpy)	HAP (lb/hr; tpy)
Enamel 3	2.48/1.04	0.219/0.053	0.0000/0.0000
Primer 1	6.06/2.94	0.032/0.016	6.0765/2.9418
Epoxy 5A	2.97/1.36	0.094/0.045	0.0000/0.0000
Epoxy 5B	2.25/1.04	0.087/0.041	0.1112/0.0514
Butyl Alcohol	2.63/1.16	0.000/0.000	0.0000/0.0000
Naphtha	2.62/1.18	0.000/0.000	0.0000/0.0000
Thinner 4	2.54/1.23	0.000/0.000	0.2535/0.1232
Vinyl Antifouling	2.72/1.28	0.208/0.100	2.7165/1.2815
Methyl Isobutyl Ketone	5.71/2.91	0.000/0.000	5.7122/2.9012
Teflon	0.04/0.01	0.000/0.000	0.0000/0.0000

Notes:
VOC — Volatile Organic Compound
PM — Particulate Matter
HAP — Hazardous Air Pollutant
tpy — ton per year

4.16.4 Evidence of Release

No spill reports, inspection reports, employee interviews, or physical evidence indicate the incidence of spills at this PAOC. However, discharges were made to the Cooper River.

4.16.5 Exposure Potential

Building 223 is adjacent to military housing. The Cooper River is approximately 800 feet from Building 223. Naval Complex employees may be exposed to air emissions from the spray booth activities.

4.16.6 Recommended Action

No further investigation of this PAOC is recommended due to the limited exposure potential and limited migration pathways. Discharges to the Cooper River will be investigated as a separate unit.

4.17 PAOC #14 — Paint Booth, Building 241

4.17.1 Unit Characteristics

PAOC #14 is a wet filter type spray booth used for spraying all types of material handling-equipment. The spray booth is included on the Bureau of Air Quality Control Permit 0560-0002 and is designated as company point 29. PAOC #14 was constructed in 1987. Figure 1-1 locates the PAOC within the Charleston Naval Complex. Figure 4-17 locates the PAOC in Building 241.

The approximate size of the spray booth is 30'x 16'x 16'. The spray booth has a 22-foot high stack with a 6'x 4' diameter. The stack is not equipped with continuous emission monitors. The spray booth is the only emissions generating point that exhausts from this stack. The normal operating schedule is 4 hours/day, 1 day/week, and 52 weeks/year (208 hours/year).

4.17.2 Waste Characteristics

Enamel alkyd gloss, epoxy 5A, epoxy 5B, butyl alcohol, and naphtha are used at this PAOC. The major constituents of concern are volatile organic compounds and metals.

4.17.3 Migration Pathways

Because PAOC #14 is located inside Building 241, soil, groundwater, and surface waters are unlikely pathways. The paint spray booth is a source of air emissions. The following are air emission data for the materials used:

TOTAL ACTUAL EMISSIONS PAOC #14			
Material Type	VOC (lbs/hr; tpy)	PM (lbs/hr; tpy)	HAP (lbs/hr; tpy)
Enamel Alkyd	3.73/0.39	0.21/0.02	0.00/0.00
Epoxy 5A	0.78/0.08	0.06/0.01	0.00/0.00
Epoxy 5B	0.59/0.06	0.06/0.01	0.02/0.003

TOTAL ACTUAL EMISSIONS PAOC #14			
Material Type	VOC (lbs/hr; tpy)	PM (lbs/hr; tpy)	HAP (lbs/hr; tpy)
Butyl Alcohol	0.97/0.10	0.00/0.00	0.00/0.00
Naphtha	1.02/0.11	0.00/0.00	0.00/0.00

Notes:
VOC — Volatile Organic Compound
HAP — Hazardous Air Pollutant
PM — Particulate Matter
tpy — ton per year

4.17.4 Evidence of Release

No spill reports, inspection reports, or employee interviews indicate spills at this PAOC. However, paint residue was present in the spray booth area inside Building 241.

4.17.5 Exposure Potential

Building 241 is not close to any residential areas. The Cooper River is approximately 1200 feet from Building 241. Naval Complex employees may be exposed to air emissions from the spray booth activities.

4.17.6 Recommended Action

No further investigation of this PAOC is recommended due to limited exposure potential and limited migration pathways.

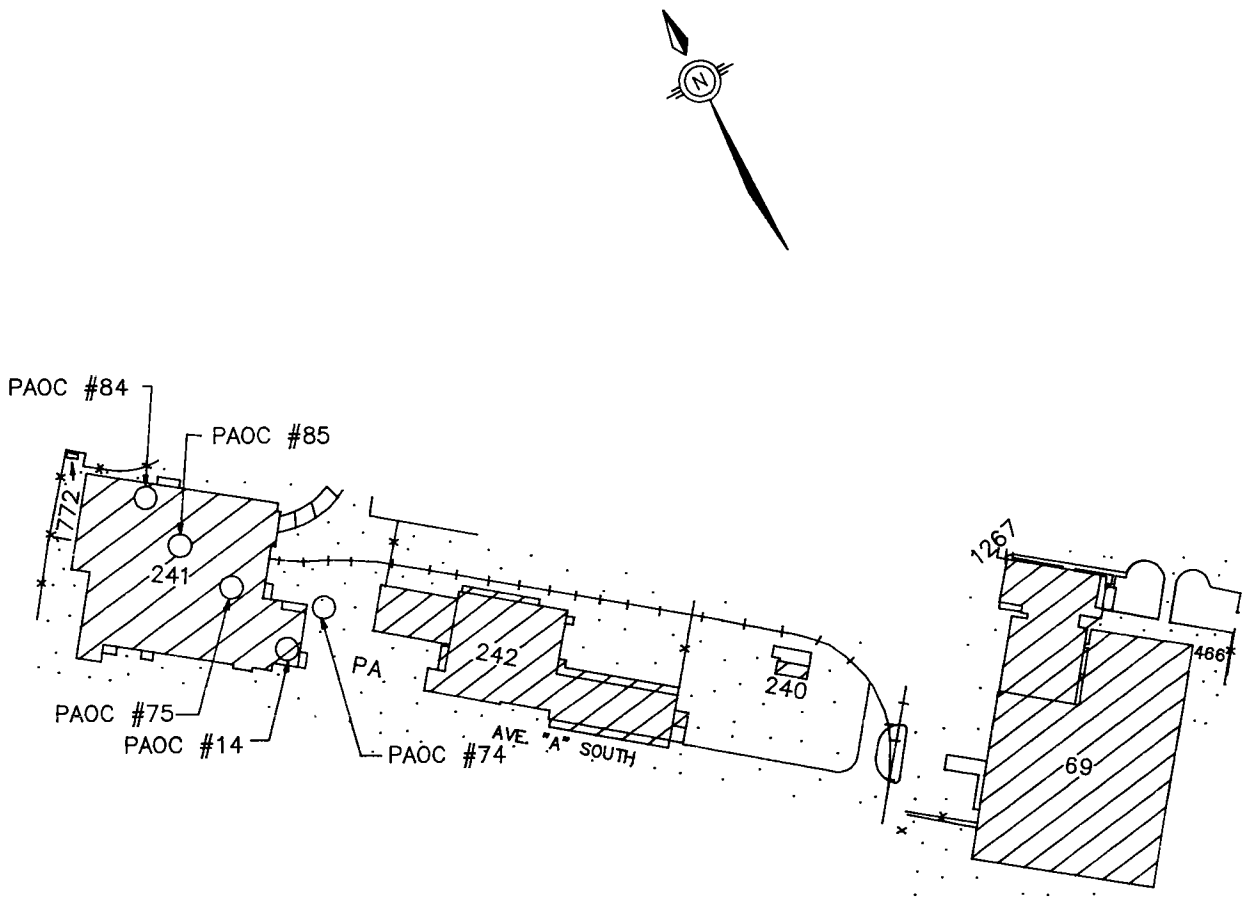

NOT TO SCALE

RCRA FACILITY
ASSESSMENT
NAVAL COMPLEX
CHARLESTON, S.C.

FIGURE 4-17
PAOC #14
BUILDING 241, PAINT BOOTH

DWG DATE: 02/16/94 | DWG NAME: 29AOC14

4.18 PAOC #15 — Paint Booth, Building 242

4.18.1 Unit Characteristics

PAOC #15 is a wet filter type paint spray booth used for automotive refinishing. The unit is no longer operational. The spray booth has a 48-foot high stack with a 42-inch diameter. The stack is not equipped with continuous emission monitors. The spray booth is the only emissions-generating point that exhausts from the stack. When in operation, the normal operating schedule was 8 hours/day, 1 day/week, and 52 weeks/year (416 hours/year). The area is currently used for storage of non-hazardous items. Figure 4-18 locates the PAOC within Building 242.

4.18.2 Waste characteristics

It is not known what paints and solvents were used. The major constituents of concern are expected to be volatile organic compounds and metals.

4.18.3 Migration Pathways

Because PAOC #15 is located inside Building 242, soil, groundwater, and surface waters are unlikely pathways. The spray booth was a source of air emissions when in operation; however, air emission data are unavailable.

4.18.4 Evidence of Release

No spill reports, inspection reports, employee interviews, or visual observation indicate spills at this PAOC.

4.18.5 Exposure Potential

Building 242 is not close to any residential areas. The Cooper River is approximately 1200 feet from Building 242. Because the unit is no longer operational and there is no evidence of a release, potential exposures to Complex employees is minimal.

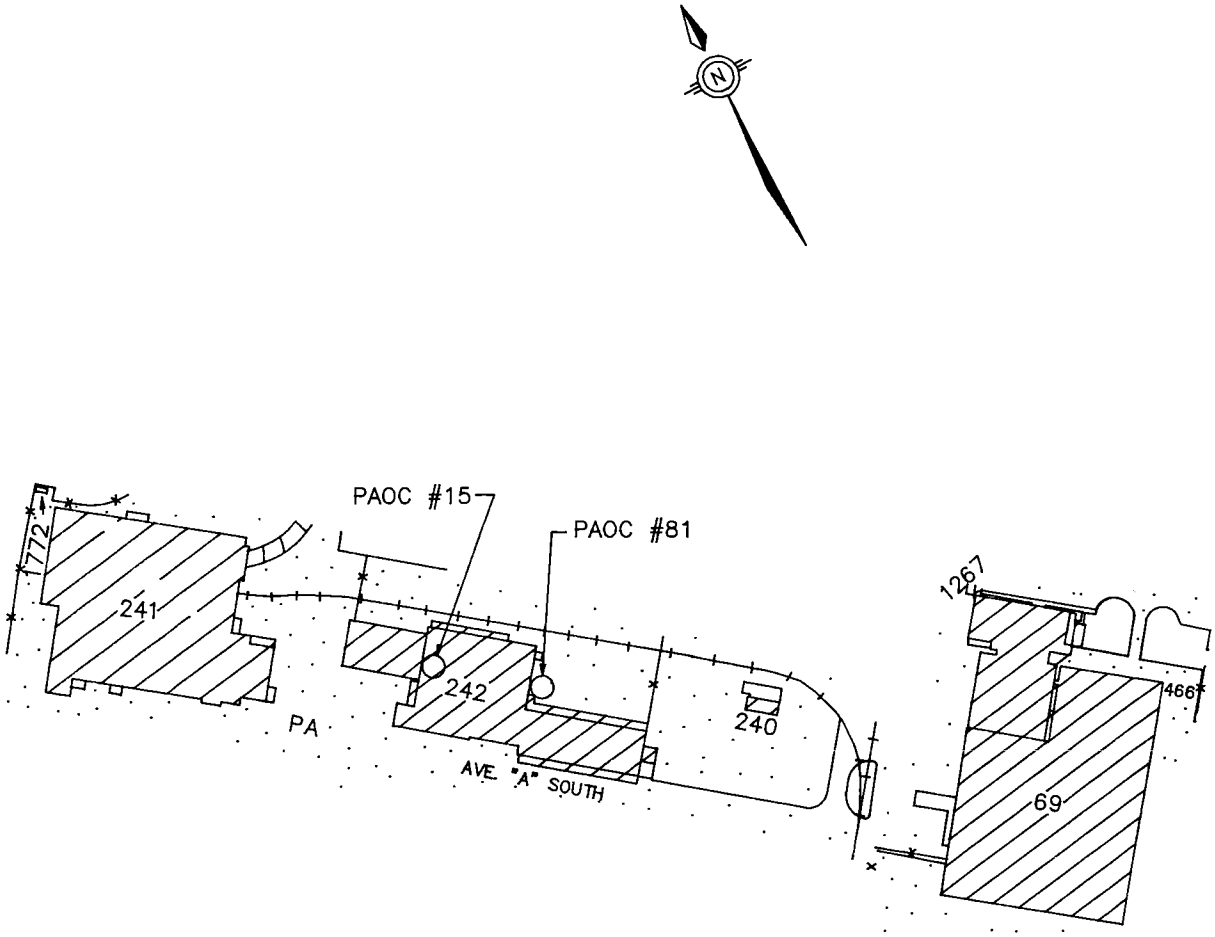

NOT TO SCALE

RCRA FACILITY
ASSESSMENT
NAVAL COMPLEX
CHARLESTON, S.C.

FIGURE 4-18
PAOC #15
BUILDING 242, PAINT BOOTH

DWG DATE: 02/16/94 | DWG NAME: 29AOC15

4.18.6 Recommended Action

No further investigation of this PAOC is recommended due to limited exposure potential and limited migration pathways.

4.19 PAOC #16 — Sanitary Sewer System

4.19.1 Unit Characteristics

The sanitary sewer system serving the Charleston Naval Complex consists of approximately 90,000 linear feet of gravity sewers and 22 pump stations with associated force mains. Most lines are constructed of vitrified clay while others are constructed of ductile iron and PVC. All wastewater generated at the Naval Complex is collected by one of two trunk lines. One serves the Naval Shipyard portion of the base while the other trunk serves the remainder of the base. Wastewater entering the system is from five major sources: residential areas, commercial facilities, industrial facilities, medical facilities, and Naval vessels. Waste water is routed into the North Charleston Sewer District (NCSD) system where it receives secondary biological treatment prior to being discharged in to the Cooper River. The *Wastewater Facilities Evaluation, Charleston Naval Base, Charleston, S.C.*, [September, 1990] by Davis and Floyd, Inc. identifies specific problems with the existing sanitary sewer system. According to the report, infiltration inflow estimated at 0.75 million gallons/day accounted for approximately 45 percent of the daily average flow. The report identified the major sources of infiltration inflow as storm sewer cross connections and groundwater infiltration. The "most serious storm sewer connections" included oil-water separators at the Fire Fighter Training facility (SWMU Number 13).

4.19.2 Waste Characteristics

Routine monitoring for compliance with the NCSD Non-Domestic Wastewater Discharge Permit and documented discharges from industrial facilities has identified heavy metals, petroleum hydrocarbons, chlorinated solvents, surfactants, acids, caustic solutions, organotin, and tributyltin in compounds as likely to be or have been present in the wastewater discharges.

4.19.3 Migration Pathways

Due to the nature of sewer line construction, a certain amount of leakage/infiltration is expected. As a consequence, soil and groundwater at leakage points would probably serve as a contaminant

migration pathway. Data suggest that tidal fluctuations influence infiltration inflow. If groundwater infiltration is occurring at high tide, it is reasonable to assume leakage at low tide. Numerous connections exist between the sanitary sewer system and the storm sewer system. The waters of the Cooper River could act as a contaminant migration pathway since they receive the discharge from the storm sewer system.

4.19.4 Evidence of Release

Numerous environmental incident reports are on file with Code 106 regarding discharges of various materials to the sanitary system. Most of these reports concern releases to the system that were in violation of the NCSD discharge permit requirements; however, the noted cross connections between the oil-water separators and storm sewer have resulted in discharges of wastes to the Cooper River.

4.19.5 Exposure Potential

There appears to be significant risk to human health and the environment due to the questionable integrity of the sewer line and potential for direct discharges to the Cooper River via the storm drains.

4.19.6 Recommended Action

A RFI is recommended for the sanitary sewer system.

4.20 PAOC #17 — Drydock Discharges

4.20.1 Unit Characteristics

NSY has five drydocks: DD1, built in 1907; DD2, built in 1942; DD3 and DD4, built in 1943; and DD5, built in 1964. The areas of concern for PAOC #17 are the drydock drains and the areas around the mouth of the drydocks. Figure 1-1 locates the drydocks within the Charleston Naval Complex.

The drydocks are constructed of reinforced concrete with a portable caisson (located at the mouth of the drydock) constructed of creosote-treated wood that serves as a dam during docking and maintenance operations. A large grated drain is located along the middle of the entire length of the drydocks. Underground pumps remove the water collected in the drain and direct it to the North Charleston Sewer System. Drydocks 1 and 2 (outfall number 009 on the NPDES permit application dated 3-3-92) have a common drainage system and outfall point, as do drydocks 3 and 4 (outfall number 010 on the NPDES permit application dated 3-3-92). The outfall for drydock 5 is number 011 on the NPDES permit application dated 3-3-92.

The drydocks are used to serve aquatic vessels. Operations include refueling, defueling, welding, painting, mechanical work, and light industrial work. According to the NPDES permit application dated, operations contributing wastewater to outfall number's 009, 010, and 011 effluent include stormwater runoff, cooling water, caisson leakage, and groundwater.

4.20.2 Waste Characteristics

Wastes reportedly discharged to the drydock drains and Cooper River include fuel oil, lube oil. waste soapy water, raw sewage, oil with dispersant, diesel fuel, ethylenediamine, non-PCB mineral oil, antifreeze, mercury, paint, muriatic acid (HCL and water combination), number 5 fuel oil, an unknown white milky liquid, abrasive blasting grit, waste oil, caustic soda, Freon, ammonium hydroxide, cleaning compound, powdered HCL, sodium bicarbonate, Gamlen cold wash, PCBs, hydraulic fluid, possible lead, an unknown green liquid, and grease.

4.20.3 Migration Pathways

Surface water (Cooper River), sediments, and air are all migration pathways. Soil and groundwater may also be migration pathways.

4.20.4 Evidence of Release

There have been numerous Environmental Incident Reports, Hazardous Material Incident Reports, Zone Inspection deficiencies, and miscellaneous reports of releases at the drydocks.

DD1: Between 2-79 and 11-25-92, there have been reported releases of oil (up to 100 gallons), lube oil (25 gallons), waste soapy water, raw sewage (250 gallons), diesel fuel (<1 gallon), ethylenediamine (200 ml), non-PCB mineral oil (135 gallons), discolored discharge water, antifreeze (2 gallons), mercury (1 teaspoon), paint, muriatic acid (up to 3000 gallons), an unknown white milky liquid, and abrasive blasting grit.

DD2: Between 8-8-79 and 9-16-93, there have been reported releases of oil (up to 100 gallons), raw sewage, caustic soda, Freon, mercury (2 ounces), ammonium hydroxide (up to 25 gallons), cleaning compound, powdered HCL (3 pounds), sodium bicarbonate, paint, grease, sodium hydroxide, PCBs, and abrasive blasting grit.

DD3: Between 4-29-81 and 1-13-93, there have been reported release of oil (up to 30 gallons), transformer oil (<50 ppm PCB oil), non-PCB transmission fluid, paint, fuel, hydraulic fluid, PCBs, possible lead, and abrasive sandblasting grit.

DD4: Environmental Incident Report Number 87-66 (dated 7-30-87) states that 7,000 gallons of oil was released to the Cooper River from DD4 to Pier M.

DD5: Between 6-11-82 and 9-21-93, there have been reported releases of oil (up to 100 gallons), raw sewage (up to 100 gallons), paint, Gamlen cold wash, mercury, an unknown green liquid, grease, and abrasive blast grit.

A sample of sludge from the bottom of DD2 was analyzed in 4-93 for silver (<0.1 ppm), arsenic (65 ppm), barium (6500 ppm), cadmium (7 ppm), copper (1000 ppm), chromium (1500 ppm), nickel (97 ppm), lead (4500 ppm), selenium (<0.1 ppm), and zinc (11000 ppm). A sample of paint chips was also analyzed from DD2 for lead (0.25%).

The outfalls from DD1 and DD2, DD3 and DD4, and DD5 were sampled on 12-19-91 and analyzed for BOD - 5 day (<3.00 ppm <3.00 ppm, and 19.0 ppm, respectively), COD (632 ppm, 662 ppm, and 632 ppm, respectively), nitrogen - ammonia (<0.100 ppm for all), oil and grease (31.0 ppm, 23.0 ppm, and 29.0 ppm, respectively), TOC (<2.000 for all), TSS (9.00 ppm, 3.00 ppm, and 160 ppm, respectively), and pH (8.00@23C, 8.16@23C, and 7.96@23C, respectively).

Currently, the drydocks have numerous stains from oil, paint, and unknown origins.

4.20.5 Exposure Potential

The site is not close to any residential areas. Exposure to workers may occur in the area. The stormwater drainage system may transport contaminants further from the drydocks.

The Cooper River, which is in the immediate vicinity of the drydocks, is an important tributary to Charleston Harbor and provides most of the freshwater inflow. Additionally, it is a significant migratory pathway for anadromous fish species.

4.20.6 Recommended Action

A RFI is recommended for PAOC #17.

4.21 PAOC #18 — Former Pickling Plant, Building 221

4.21.1 Unit Characteristics

PAOC #18 is a former pickling plant. The process equipment and tanks have been removed and the area is currently used for lead storage (PAOC #19). The building was cleaned when the process was dismantled in 1984; however, this cleanup may have not been adequate based on current standards. Figure 1-1 locates Building 221 within the Charleston Naval Complex. Figure 4-19 locates the PAOC within Building 221.

From 1940 to 1970, the pickling plant was an open-air facility with only the pickling tanks covered by a roof. A one-story structure of approximately 4,370 square feet was built in 1970 to house the pickling operations. In 1983/1984, all pickling process equipment was removed from the building. No plans or designs were available for the operation, but it is likely that the process required a series of chemical baths and water rinses. The chemical vats in the former pickling plant were reportedly prepared by diluting the chemical solutions with potable water via hoses. Spent solution from tanks was discharged via storm drainage system into the Cooper River until 1974 when a contractor was hired to transfer waste offsite for disposal.

A June 30, 1983, memorandum noted the absence of backflow prevention on the hoses and water line feeding the facility. It was recommended that a hose-bibb vacuum breaker be attached to the hoses used for mixing chemicals. No record of the installation of such devices was found.

Past operations included degreasing with "dry cleaning fluid" (Stoddard solvent), hydrochloric acid bath, iridite bath, nitric acid bath, paint stripper bath, bright dip (sodium dichromate), sulfuric acid bath, trisodium phosphate bath, and deoxyisoprop bath. The tanks used for these baths ranged in capacity from approximately 1,500 gallons to 2,400 gallons. The baths were changed every 3 to 6 months, depending on the amount of use, and after 1974, the spent pickling baths were contract hauled. The quantities of waste generated in the pickling shop on

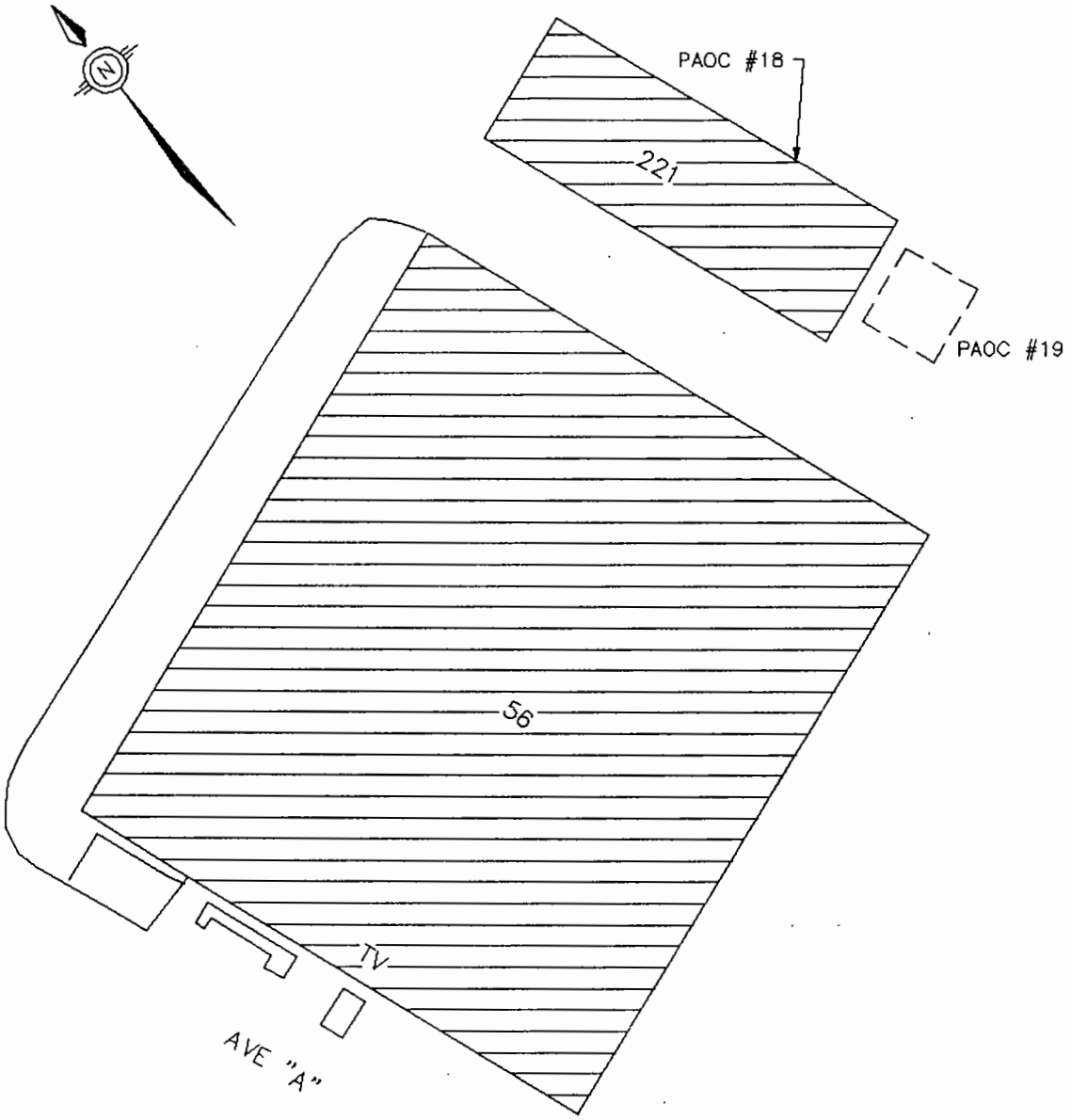

NOT TO SCALE

RCRA FACILITY
ASSESSMENT
NAVAL COMPLEX
CHARLESTON, S.C.

FIGURE 4-19
PAOC #18
BUILDING 221, PICKLING PLANT

DWG DATE: 02/10/94 | DWG NAME: 27N56

an annual basis were as follows: spent pickling acids and other corrosives (1,375 gallons), bright dip (275 gallons), and trisodium phosphate (1,210 gallons). Since 1974, Public Works at the Naval Shipyard has arranged for a private contractor to dispose of spent pickling waste. Prior to that time, the contents of spent pickling baths were discharged into the Cooper River (150 feet south) via the storm drainage system. The process was dismantled circa 1983/1984.

Presently, the facility is used as a lead storage area and is described in Section 4.22.

4.21.2 Waste Characteristics

A 1986 Inventory of Hazardous Waste Minimization Program listed alcohol and sodium nitrate as generated wastes. A Hazardous Materials and Waste Survey (1980) listed the following wastestreams and quantities/year for the pickling operation at Building 221: spent sulfuric and hydrochloric acid and other corrosives with lead, chromium, etc. mixed in (25 bbl); brass DIP waste (Na_2 [CRO_7] and chromium) (56 bbl); trisodium phosphate sludge (TSP) (20-23 bbl); alkaline arrestor and rust remover; paint stripper (solvent) (3-35 bbl); and a waste sump picked up by Shop 99 (hazardous because of oil and metal content - 70 drums).

4.21.3 Migration Pathways

Spent solution from tanks was discharged via the storm drainage system into the Cooper River. Therefore, surface water is a migration pathway. Soil and groundwater may also be migration pathways.

4.21.4 Evidence of Release

An Incident Report from July 26, 1983, documents a leak of approximately 300 gallons of 30 percent sulfuric acid from a dip tank which ran unchecked into a sanitary sewer for 24 hours. It was verified (method was not noted) that acid had not reached the Cooper River via storm sewer system and the tank was repaired. No followup actions were taken since the amount spilled was not a reportable quantity.

Hazardous waste characterization samples were collected from the former pickling shop in November 1984 and submitted for laboratory analysis. The following table represents those sources and parameters which exceeded the 40 CFR 261.22 and 261.24 allowable limits and are therefore considered hazardous wastes.

Waste ID (Matrix)	Corrosivity	Cadmium	Chromium	Lead	Arsenic
Paint stripper (sludge)	X	X			
Iridite (solid)	X		X		
Nitric acid sludge tank (sludge)	X	X	X	X	
Alkaline deruster (sludge)	X	X			X

One disposal sample was also collected from the nitric acid dip tank according to a November 13, 1984, draft memorandum. Analytical results are as follows:

pH	—	0 ppm
Copper	—	1,520 ppm
Chromium	—	10 ppm
Lead	—	72 ppm
Nickel	—	20 ppm
Zinc	—	240 ppm

4.21.5 Exposure Potential

Building 221 is located approximately 800 feet from military housing. Building 221 is adjacent to Pier C.

4.21.6 Recommended Action

Due to the evidence of past releases and lack of a thorough assessment of potential hazards associated with the former pickling plant, a RFI is recommended. Discharges made to the Cooper River and sanitary sewer will be investigated as separate units.

4.22 PAOC #19 — Lead Storage, Building 221

4.22.1 Unit Characteristics

PAOC #19 is a lead storage area where lead blankets and shielding used in submarine radiological work are stored on pallets and rack-and-stack shelves inside the building, and on pallets in the yard on the south end of Building 221. Most of the lead is encased in rubber but some exposed lead is stored beneath a tarp. PAOC #19 has a concrete floor. Figure 1-1 locates Building 221 within the Charleston Naval Complex. Figure 4-20 locates PAOC #19 in Building 221.

PAOC #19 is the former location of a pickling operation (PAOC #18; see Section 4.21 for details) which was active until 1983/84. Currently, the building and adjacent storage yard are used for storing lead blankets and shielding. PAOC #19 also is used as a staging area for scrap lead awaiting disposal.

4.22.2 Waste Characteristics

The waste associated with this PAOC is scrap lead, lead-lined drums, etc. The wastes associated with past pickling operations at this facility are also a concern.

4.22.3 Migration Pathways

Soil, groundwater, and surface water are potential migration pathways. Contaminants associated with the scrap lead stored in the open area to the south may either flow into a stormwater catch basin and then into the Cooper River or percolate into the soil, possibly into the shallow groundwater (because of the presence of acidic pickling solutions).

4.22.4 Evidence of Release

Zone Inspection Report (May 13, 1992) documented seven pallets of lead waste labeled with hazardous waste labels and stored in an unpermitted area. Also listed was a damaged 55-gallon

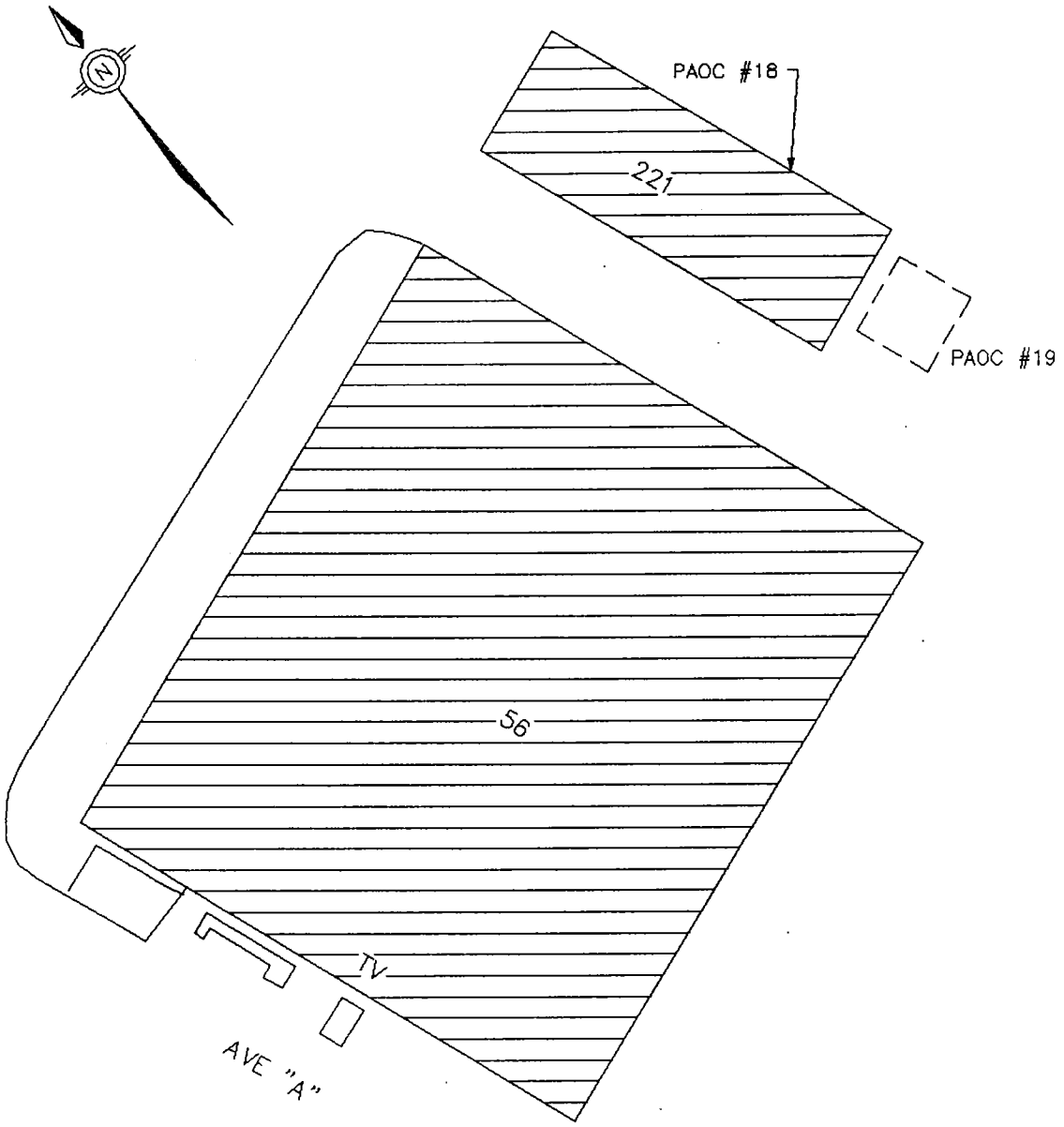

NOT TO SCALE

RCRA FACILITY
ASSESSMENT
NAVAL COMPLEX
CHARLESTON, S.C.

FIGURE 4-20
PAOC #19
BUILDING 221, LEAD STORAGE AREA

DWG DATE: 02/10/94 | DWG NAME: 27N56

lead-lined drum, open and filled with rust-colored rainwater. Corrective actions were taken by responsible parties.

4.22.5 Exposure Potential

Building 221 is approximately 800 feet from military housing. Building 221 is adjacent to Pier C. Contaminants may have flowed into the stormwater catch basin and then to the Cooper River.

4.22.6 Recommended Action

Due to the waste management practices and lack of a thorough assessment of the potential hazards associated with the lead storage area, a RFI is recommended. Discharges to the Cooper River will be investigated as a separate unit.

4.23 PAOC #20 — Dry Cleaning, Building 1189

4.23.1 Unit Characteristics

PAOC #20 (Building 1189) is the former location of a dry cleaning operation which was in operation from 1942 to 1986. Property records indicate improvements (primarily the removal of dry cleaning equipment) were made in 1986. Since 1986, this facility has been a laundry with two industrial washers and dryers which are operated by the Morale. Welfare and Recreation Division. This building also provided offices for the Fire Prevention and Inspection Division (recently vacated) and space for miscellaneous storage. Based on a 1984 NAPSIS report, this facility operated 8 hrs/day, 5 days/week, 50 weeks/year. Figure 1-1 locates Building 1189 within the Charleston Naval Complex. Figure 4-21 locates the PAOC in Building 1189.

4.23.2 Waste Characteristics

Perchloroethylene (PCE) was used in the dry cleaning operations.

4.23.3 Migration Pathways

According to a 1984 NAPSIS report, the dry cleaning facility was classified as a minor emitter with documented air emissions of 78.8 tons/year of total hydrocarbons (THCs). All emissions ceased when the dry cleaning operation was dismantled in 1986.

4.23.4 Evidence of Release

No spill reports, inspection reports, employee interviews, or visual observations indicate spills at this PAOC.

4.23.5 Exposure Potential

Building 1189 is located approximately 250 from the Complex boundary. There are residences on the other side of this boundary. Current potential exposures to Complex employees are minimal. Soil and groundwater are potential migration pathways if releases occurred.

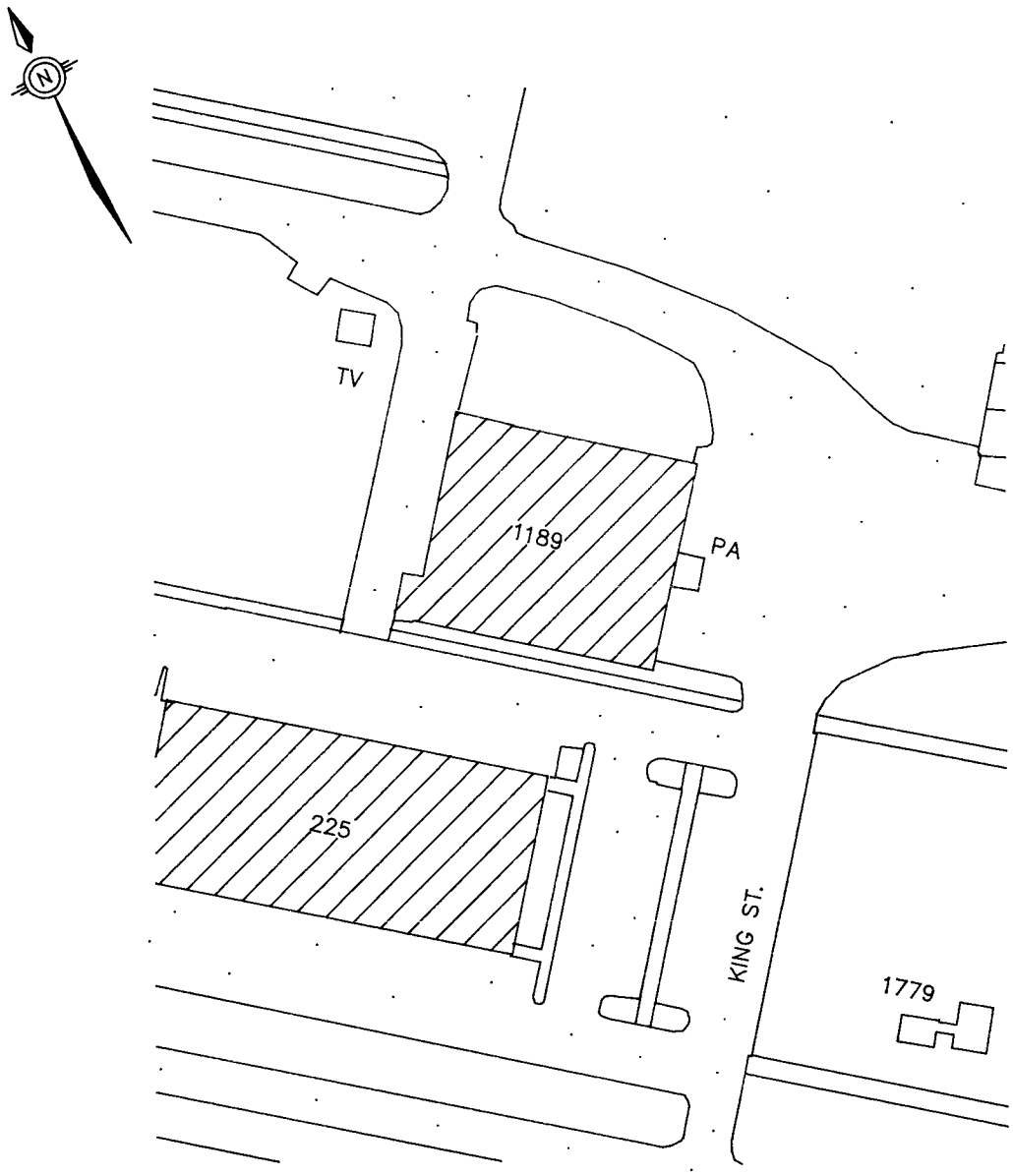

NOT TO SCALE

RCRA FACILITY
ASSESSMENT
NAVAL COMPLEX
CHARLESTON, S.C.

FIGURE 4-21
PAOC #20
BUILDING 1189, DRY CLEANING

DWG DATE: 02/16/94 | DWG NAME: 29AOC20

4.23.6 Recommended Action

A RFI is recommended due to the hazardous characteristics PCE, the amount of hazardous materials used, and the lack of spill documentation.

4.24 PAOC #21 — Lead Storage, Building 9

4.24.1 Unit Characteristics

PAOC #21 is the area outside Building 9 used for the storage of lead blankets and shielding used primarily in submarine work. PAOC #21 is still operational. Figure 4-22 locates this unit within the Charleston Naval Complex.

The lead-containing materials were placed on concrete or on a combination of pallets and concrete. No berms or overhead protection were used. The approximate dimension of the lead storage area is 65'x 35'. Most of the lead stored was encased in rubber or fabric; however, bare lead has also been stored. During a site survey conducted on January 31,1994, cracks were observed in the concrete. Otherwise, PAOC #21 was in good condition.

4.24.2 Waste Characteristics

The primary waste associated with this PAOC is lead.

4.24.3 Migration Pathways

The potential exists for lead contaminated stormwater to migrate from this unit. Stormwater from this unit drains to a catch basin and discharges into the Cooper River.

4.24.4 Evidence of Release

No spill reports, inspection reports, employee interviews, or physical evidence indicate spills at this PAOC.

4.24.5 Exposure Potential

This PAOC is not in close proximity to any residential areas. Stormwater from this unit discharges into the Cooper River

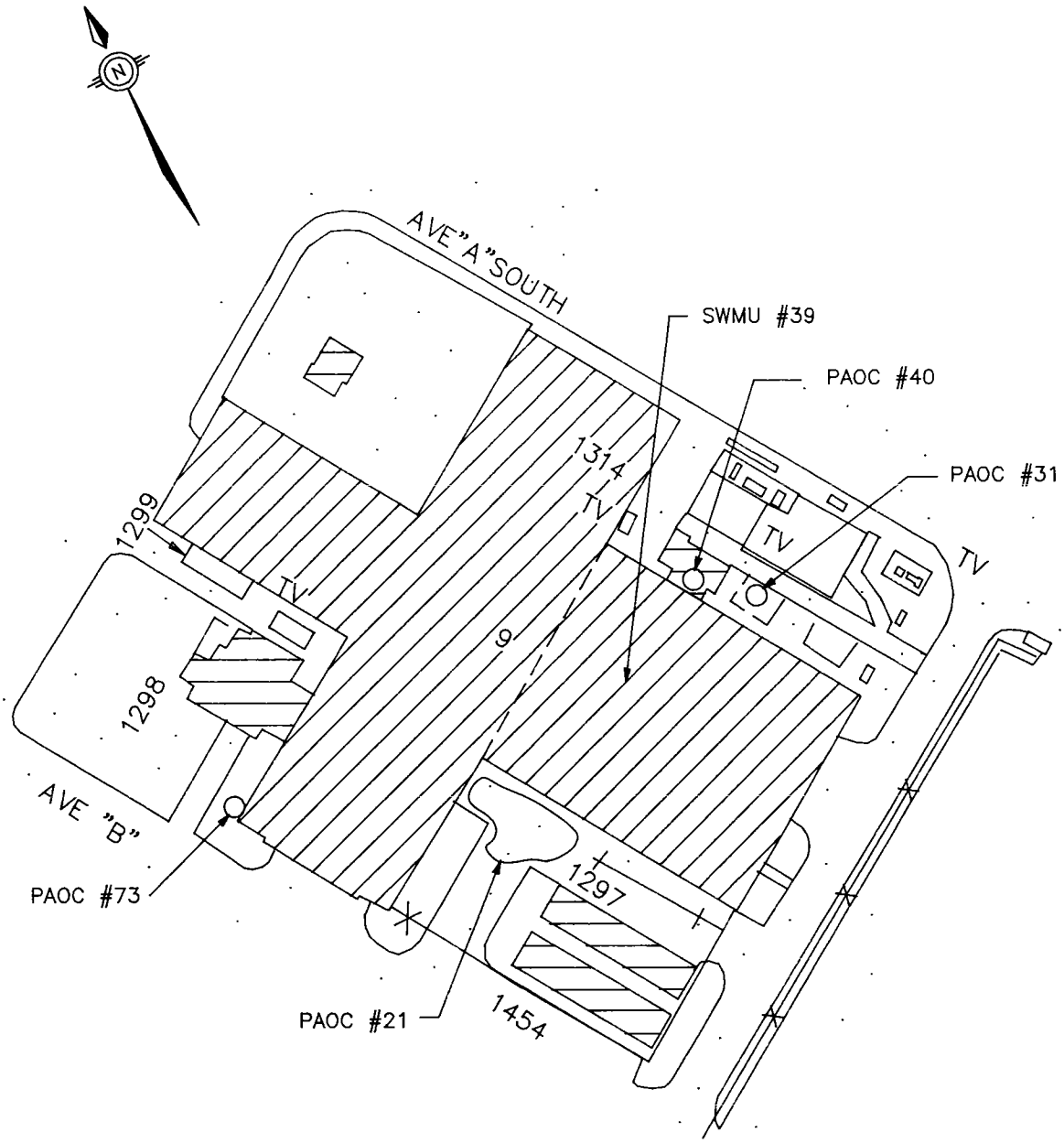

NOT TO SCALE

RCRA FACILITY
ASSESSMENT
NAVAL COMPLEX
CHARLESTON, S.C.

FIGURE 4-22
PAOC #21
BUILDING 9, LEAD STORAGE

DWG DATE: 02/16/94 | DWG NAME: 29AOC21

4.24.6 Recommended Action

There is no evidence of a release from this unit. However, confirmation sampling is recommended due to the nature of the waste and the design of the unit which may allow migration of any potential releases.

4.25 PAOC #22 — Service Station, Building 1346

4.25.1 Unit Characteristics

This unit was, constructed in 1962, operates as a gasoline station and automotive repair and maintenance shop and was served by 9 steel USTs. 3 of the original 9 USTs were replaced with fiberglass USTs in 1992. A waste oil UST located at this facility was to have been removed, but there is no record of its removal. Figure 1-1 locates Building 1346 within the Charleston Naval Complex. Figure 4-23 locates the features of Building 1346/PAOC #22.

4.25.2 Waste characteristics

BTEX, heavy fraction petroleum hydrocarbons, and solvents are the primary constituents of concern at this facility.

4.25.3 Migration Pathways

Soil and groundwater are the contaminant migration pathways associated with the leaking USTs. Percolation of petroleum hydrocarbons through the soil may have resulted in impact of the shallow groundwater. Recent soil-gas analyses show presence of contamination, indicating subsurface gas as a likely migration pathway.

4.25.4 Evidence of Release

In 1992, it was determined through hydrostatic testing that three of the service station's USTs were leaking and an undetermined amount of fuel had been released. These tanks and approximately 200 cubic yards of soil were subsequently removed. During the removal of USTs from this facility, workers reported the presence of a strong petroleum odor. The excavated soil was analyzed for total petroleum hydrocarbons (TPH), benzene, toluene, ethyl benzene, xylenes (BTEX), and lead. Analyses indicated the presence of both TPH and BTEX, but lead concentrations were below detection limits.

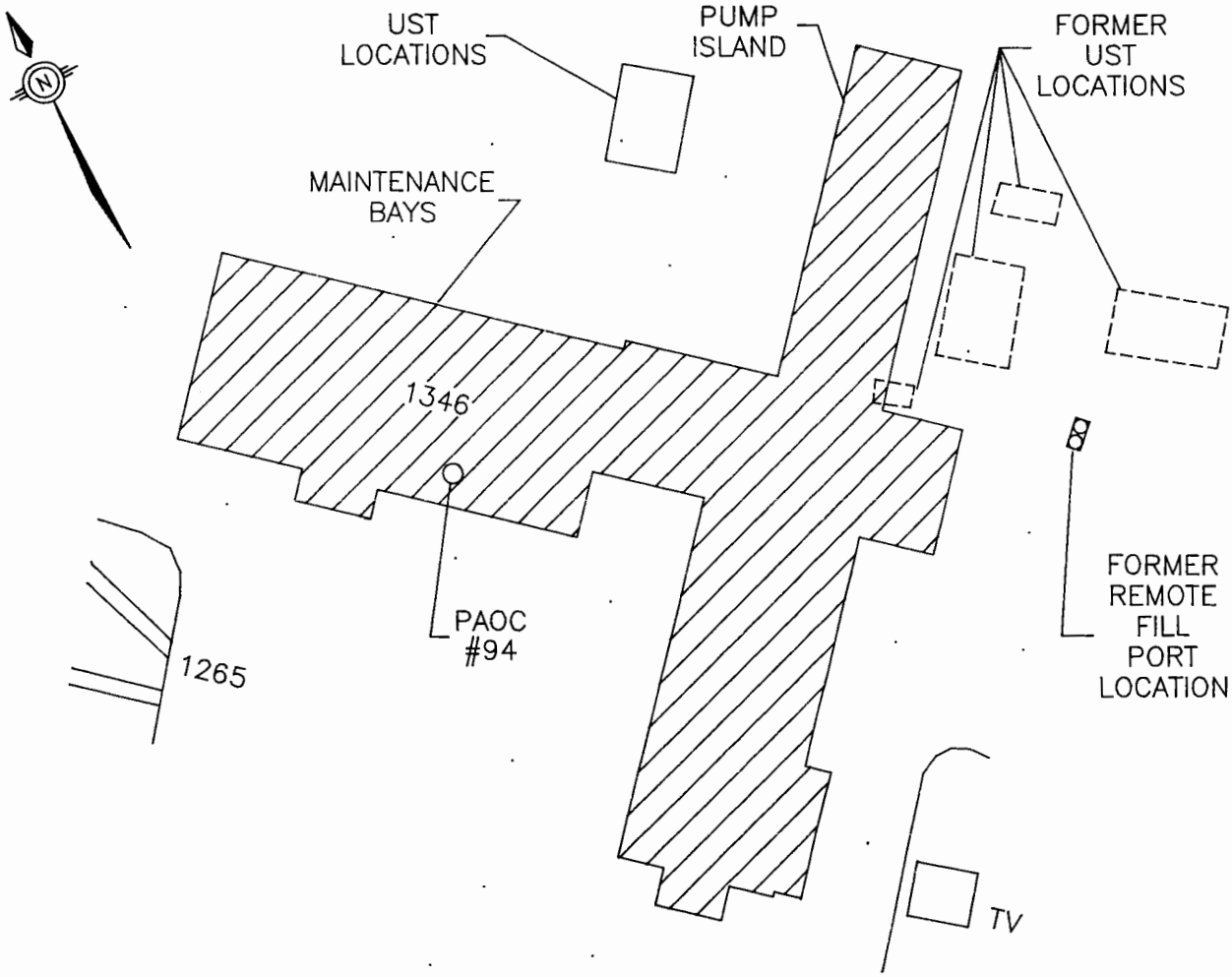

NOT TO SCALE

RCRA FACILITY
ASSESSMENT
NAVAL COMPLEX
CHARLESTON, S.C.

FIGURE 4-23
PAOC #22
BUILDING 1346, GAS STATION

DWG DATE: 02/16/94 | DWG NAME: 29AOC22

An organic vapor survey of the area around the tanks identified several samples containing high concentrations of organic vapor and strong odors. These samples were collected and analyzed at 2-foot intervals to a depth of 6 feet. Indications of downgradient impact in excess of 1000 ppm were recorded at each interval. On July 13, 1987, a sheen on the water in a nearby manhole was also noted by workers.

CNSY Fire Inspector Boyd stated that an undetermined amount of fuel was released from the USTs (no date specified) which impacted the surrounding soil, remarking that vegetation as much as 200 feet away "turned yellow". The surrounding vegetation is primarily grasses, which have a shallow root system and would therefore indicate surface migration of contaminants. Additional cleanup procedures were reportedly initiated but do not appear to have been completed.

4.25.5 Exposure Potential

This site is not close to any residential areas or sensitive environments, although service station/mimimart employees may have been exposed.

4.25.6 Recommended Action

Due to the evidence of past releases and lack of a thorough assessment of the potential hazards associated with these releases, a RFI is recommended.

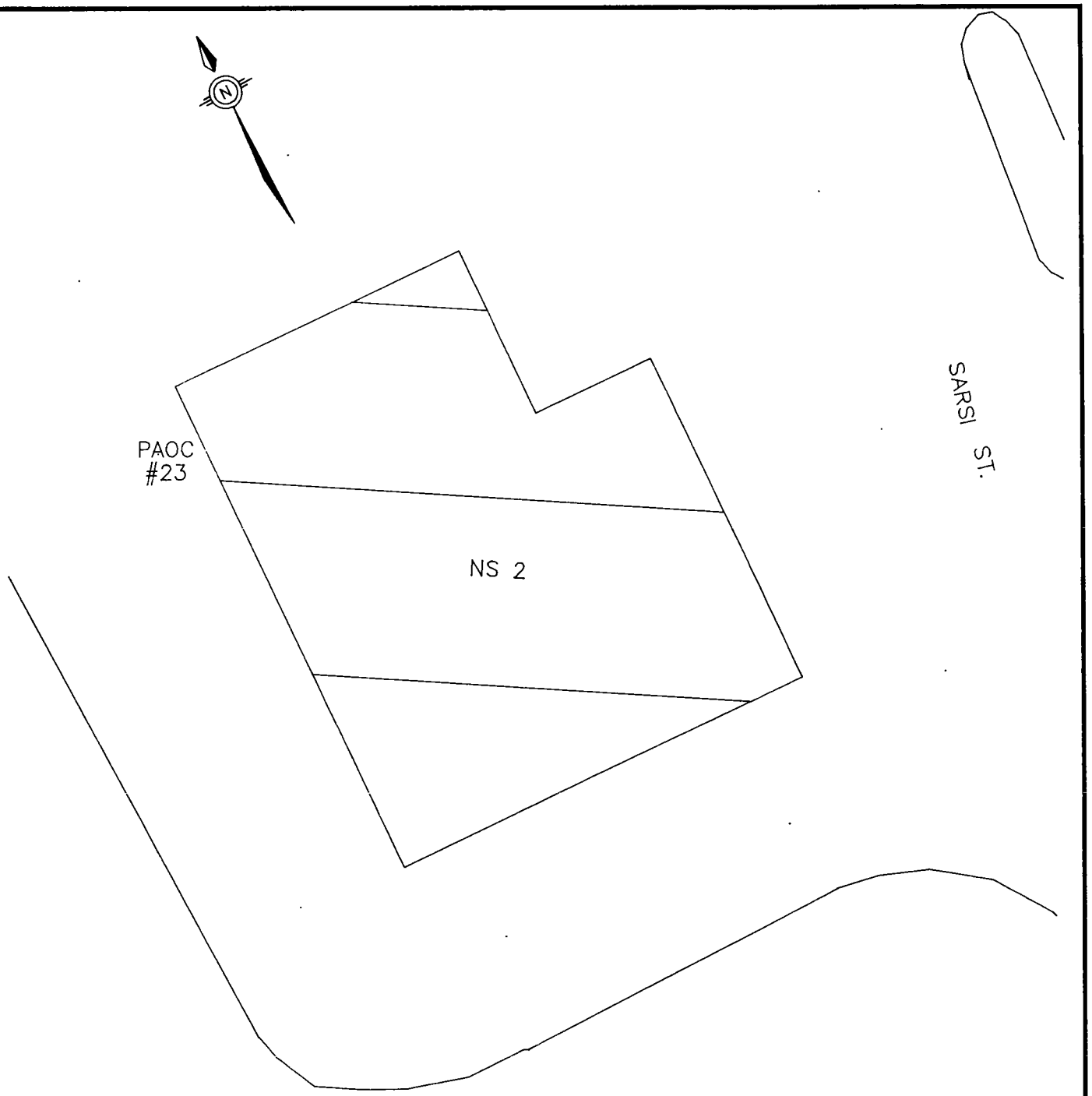

NOT TO SCALE

RCRA FACILITY
ASSESSMENT
NAVAL COMPLEX
CHARLESTON, S.C.

FIGURE 4-24
PAOC #23
BUILDING NS 2 GROUNDS

DWG DATE: 02/16/94 | DWG NAME: 29AOC23

It is reported that a sea plane refueling operation was once located in the area of PAOC #23 many years ago. Details and period of operation are unavailable.

4.26.2 Waste Characteristics

Wastes associated with PAOC #23 are petroleum-based products potentially originating from either past sea plane refueling activities in the vicinity of NS-2 or the adjacent 25,000-gallon fuel oil UST or both.

4.26.3 Migration Pathways

Both number 5 and number 2 fuel oils have been utilized at this facility and are potential sources of soil contamination. Any liquid escaping the indoor boiler units would either flow to existing floor drains and into the sanitary sewer system. Spills occurring from any overfilling or leakage of the UST would flow into a stormwater catch basin and then into the Cooper River or percolate into the soil, possibly into the shallow groundwater.

Unless reactivated, the boilers offer no airborne migration potential. Detailed emission records from past operations are available in the facility file for Building NS-2.

4.26.4 Evidence of Release

Numerous reports of fuel oil spills (ranging from 3 to 500 gallons) were documented, the earliest being in 1977. Each spill was cleaned up with the application of oil-absorbent material which was then containerized and disposed of as hazardous waste. Spills occurred primarily during tank re-filling by contractor. One spill was the result of a leaking oil line between an oil pump and a boiler.

Waste oils from the boiler house's oil/water separator have been sampled bi-annually and all samples "passed" standard criteria for flash point, pH, total halogens, arsenic, cadmium, chromium, and lead.

Stained soil was observed around the UST fill pots. Subsurface oil or petroleum-based product was also observed during the installation of an electrical duct bank in the immediate vicinity of NS-2. Sources indicate that routine level checks in the adjacent UST do not indicate any loss of product. It is assumed, therefore, that the observed subsurface petroleum is associated with the former sea plane refueling operations.

4.26.5 Exposure Potential

The potential exists for organisms in the Cooper River ecosystem to have been impacted.

4.26.6 Recommended Action

Due to the evidence of past releases and lack of a thorough assessment of the potential hazards associated with these releases, a RFI is recommended.

4.27 PAOC #24 — Pump House, Pier J

4.27.1 Unit Characteristics

This is the location of a hurricane-damaged transfer station or pump house formerly used for the distribution of diesel fuel. Figure 1-1 locates Pier J within the Charleston Naval Complex. Figure 4-25 locates the PAOC in relation to the pier.

The floor of the structure is situated below grade and rainwater has accumulated within the structure which was badly damaged by a hurricane in 1989. The structure is slated for demolition. During a visual site inspection on February 2, 1994, no wastes were observed.

4.27.2 Waste characteristics

This location was formerly used for the distribution of diesel fuel; therefore, POL waste may have been generated.

4.27.3 Migration Pathways

PAOC #24 is a potential source of soil, groundwater, surface water, and soil-gas contamination.

4.27.4 Evidence of Release

No spill reports, inspection reports, employee interviews, or physical evidence indicate spills at this PAOC.

4.27.5 Exposure Potential

This PAOC is not in close proximity to any residential areas but is near the Cooper River, a sensitive environment. Exposures from this unit are limited to Naval Complex employees and organisms in the Cooper River.

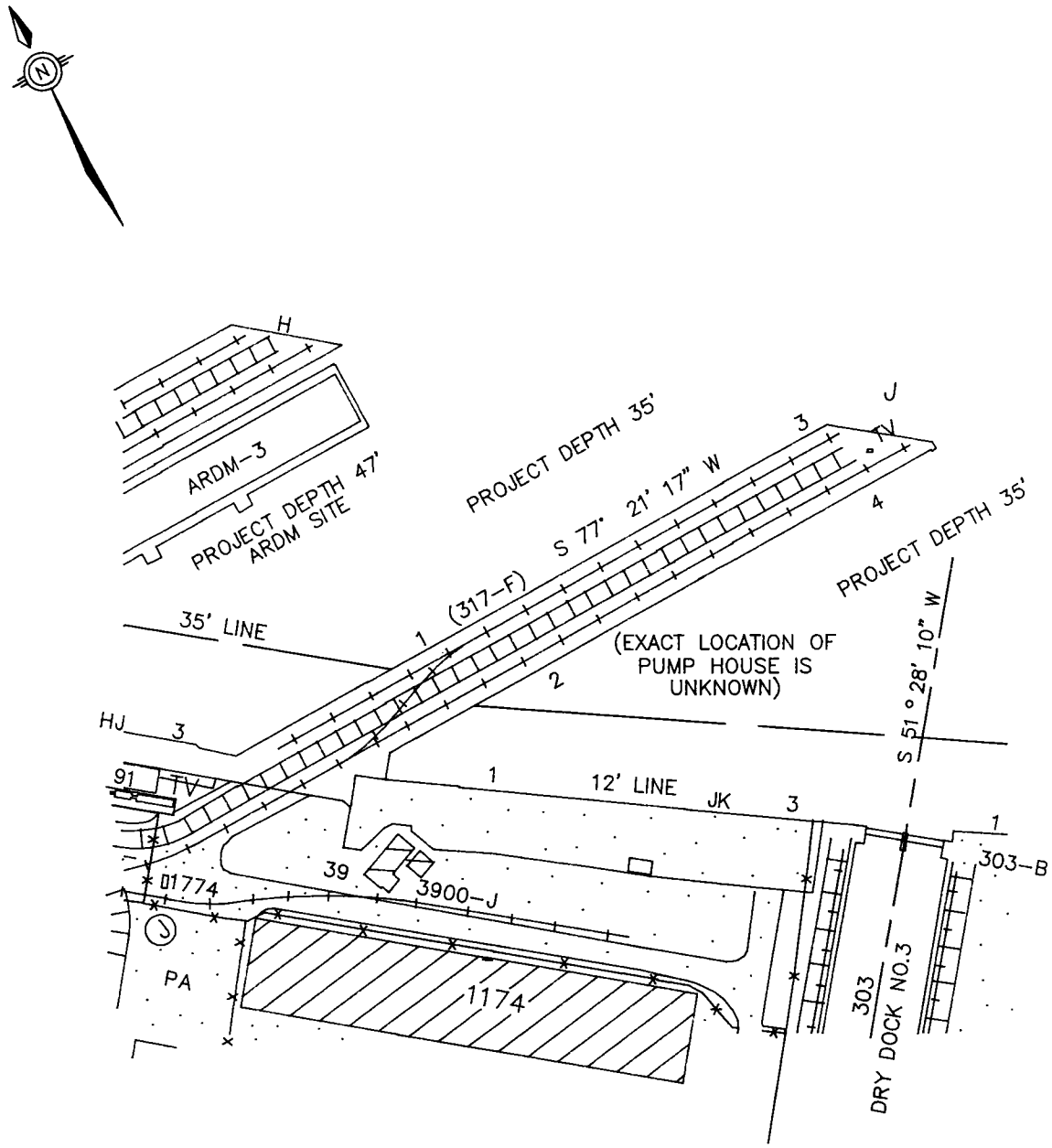

NOT TO SCALE

RCRA FACILITY
ASSESSMENT
NAVAL COMPLEX
CHARLESTON, S.C.

FIGURE 4-25
PAOC #24
PIER J, PUMP HOUSE

DWG DATE: 02/16/94 | DWG NAME: 29AOC24

4.27.6 Recommended Action

Due to the evidence of past releases and lack of a thorough assessment of the potential hazards associated with these releases, a RFI is recommended.

4.28 PAOC #25 — Charleston Naval Supply Center Fuel Farm

4.28.1 Unit Characteristics

This PAOC is the on-base fuel farm and is made up of several units designed for the storage and transfer of both virgin and waste petroleum products: Building #98 is a fuel oil booster pump house, Building Numbers 133 and 172 are operational storage buildings, Facility Numbers 3900E and 3900F are 2,350,000-gallon diesel oil tanks, Facility #3901A is a 103,000- gallon waste oil tank, Facility #3901B is the waste oil pumphouse, and Facility Numbers 3616 and 3917 are 4,200,000-gallon diesel oil tanks installed around 1992, replacing former 3900G and 3900H, respectively. Storage tanks 3900F and 3917 are currently empty. Figure 1-1 locates the unit within the Charleston Naval Complex. Figure 4-26 locates the facilities within the PAOC. The unit was designed to store large quantities of petroleum products and the tanks are situated inside earthen secondary containment dikes. Also associated with this unit, but used very infrequently, are Facility Numbers 148 (stripper tank, capacity unknown), 39L (steel, 6500-gallon above-ground tank, contents unknown), and 39M (diesel fuel pump house). The capacity of the containment dikes was not substantiated during the document search.

Also addressed as part of this unit is the underground fuel line used to transfer product between the storage tanks and Piers Kilo and Lima. The fuel line is approximately 800 feet long and terminates on both ends into above-ground valve assemblies.

PCBs are another concern of this unit. At least one PCB-containing transformer is located near Building #98. Several reports document regular inspections of this transformer and no mention is made of any releases. A document dated 9 November, 1987, states that the transformer near 98 was to be replaced by a non-PCB transformer by 1 October, 1990. No record was found to establish that this action was completed.

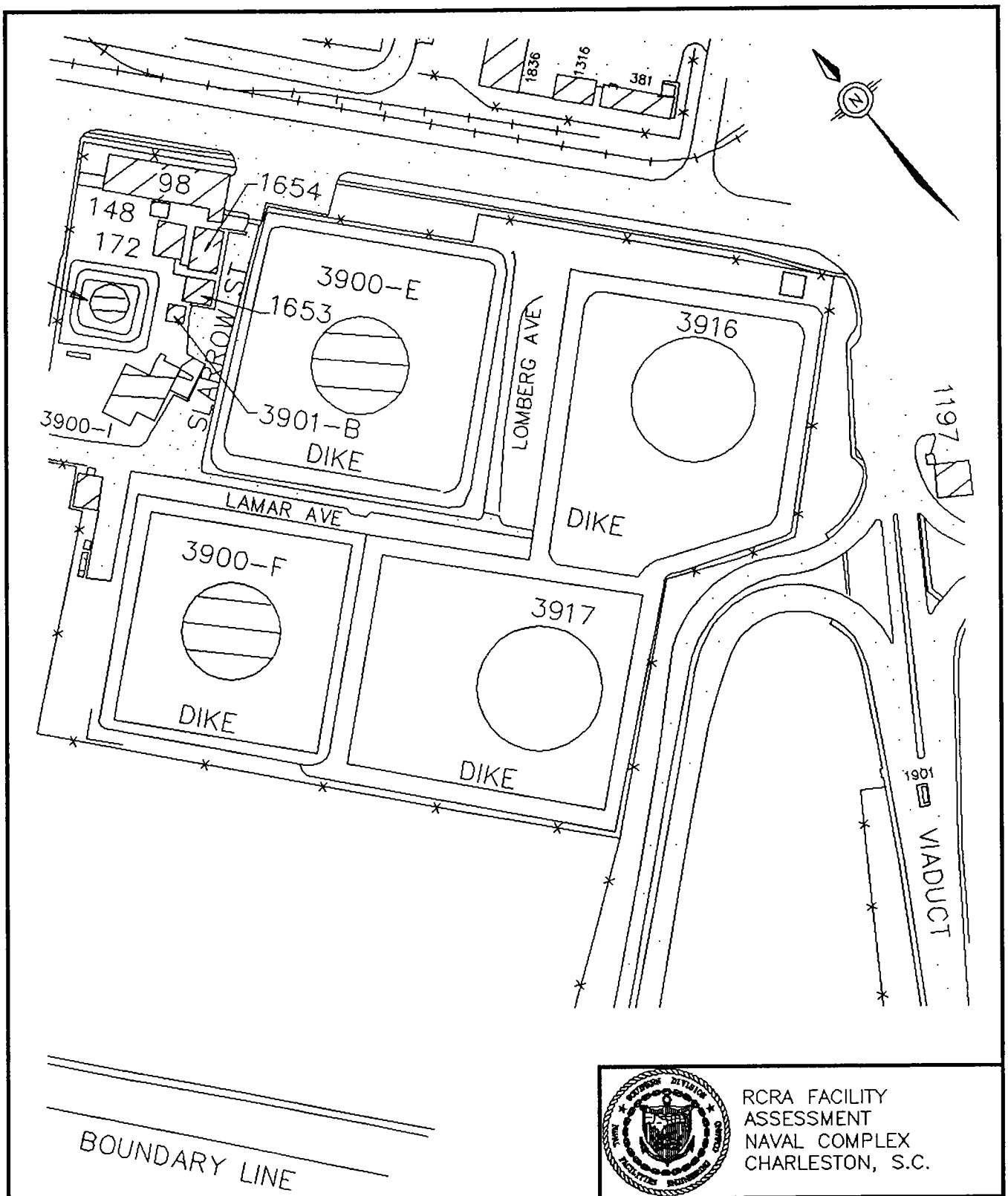

RCRA FACILITY
ASSESSMENT
NAVAL COMPLEX
CHARLESTON, S.C.

FIGURE 4-26
PAOC #25
NSC FUEL FARM

NOT TO SCALE

DWG DATE: 02/11/94 | DWG NAME: 27T3916

4.28.2 Waste Characteristics

The primary concern for this unit is petroleum hydrocarbon wastes. Numerous Environmental Incident Reports were uncovered with accounts of spills ranging from a few gallons to several thousand gallons. Bioremediation efforts were undertaken by KEMRON Environmental Services, Inc. at the earthen containment dikes in approximately 1990. These efforts involved oxygenating subsurface soil using a plow to accelerate microbial decomposition of subsurface petroleum products.

4.28.3 Migration Pathways

Soil is a viable migration pathway due to past releases, as is groundwater migration caused by the saturation of soil with petroleum products and break-through to the water table. Subsurface gas offers another potential migration pathway.

4.28.4 Evidence of Release

There have been numerous reports of releases at this site ranging in size from a few gallons to several thousand gallons. It is reported that during demolition of the concrete pads for the former diesel tanks 3900G and 3900H, free-product was encountered and thought to be the result of spills and long-term leaching of petroleum hydrocarbons at the containments. Certificates of Analysis were located stating that samples were taken at the containment dikes for 3900F and 3917/3900H and analyzed for oil and grease. These assays indicated the presence of oil and grease in both of the containments at concentrations of 1.60 mg/L at 3900F containment dike and 1.90 mg/L at 3917/3900H containment dike. The depth at which the samples were collected was unspecified.

S & ME, Inc., an environmental consulting firm, conducted a study to determine the existence of petroleum impact along the underground fuel line between the fuel farm and Piers Kilo and Lima. Samples were collected at 2-foot intervals to the soil/groundwater interface (approximately 6 feet below grade) and assayed using an organic vapor analyzer for preliminary

indication of petroleum impact. Samples were collected approximately 10 feet apart and those with positive readings were submitted to a laboratory for quantitative analysis. These results indicate petroleum impact in the following areas:

- From the above-ground valve assembly at the fuel farm and approximately 200 feet along the fuel line.
- The area from the above-ground valve assembly at Piers Kilo and Lima approximately 100 feet along the fuel line.
- An approximate 125-foot length beginning approximately 200 feet from the above-ground valve assembly at Piers Kilo and Lima along the fuel line toward the fuel farm.

4.28.5 Exposure Potential

Exposure to airborne constituents at this unit can occur during procedures in which subsurface petroleum is exposed at this site (e.g., removal of concrete pads, monitoring well installation). Dermal contact may also occur to workers at this unit.

4.28.6 Recommended Action

Due to the evidence of past releases and lack of a thorough assessment of the potential hazards associated with these releases, a RFI is recommended.

4.29 PAOC #26 — Pier M Laydown

4.29.1 Unit Characteristics

The location of the laydown area is in the vicinity of Pier M, but the exact location is not known. Figure 1-1 locates Pier M within the Charleston Naval Complex. The Pier M laydown area has been used by Submarine Squadron Four personnel to store lead shielding and other material. An abandoned spray booth may be located in this area. It is likely that radiologically contaminated tarps from radiation control areas are placed in the laydown area. Figure 1-2 locates Pier M within the Charleston Naval Complex. Figure 4-27 locates the PAOC in relation to Pier M.

4.29.2 Waste Characteristics

Lead-containing materials are known to be stored. Sufficient information is not available to determine other possible waste characteristics.

4.29.3 Migration Pathways

Surface water is a potential migration pathway due to PAOC #26's location near the Cooper River. Soil is another viable migration pathway due to design characteristics of this laydown yard.

4.29.4 Evidence of Release

No spill reports, inspection reports, or employee interviews indicate spills at this unit.

4.29.5 Exposure Potential

The site is not in close proximity to any residential area. This unit is located very near the Cooper River.

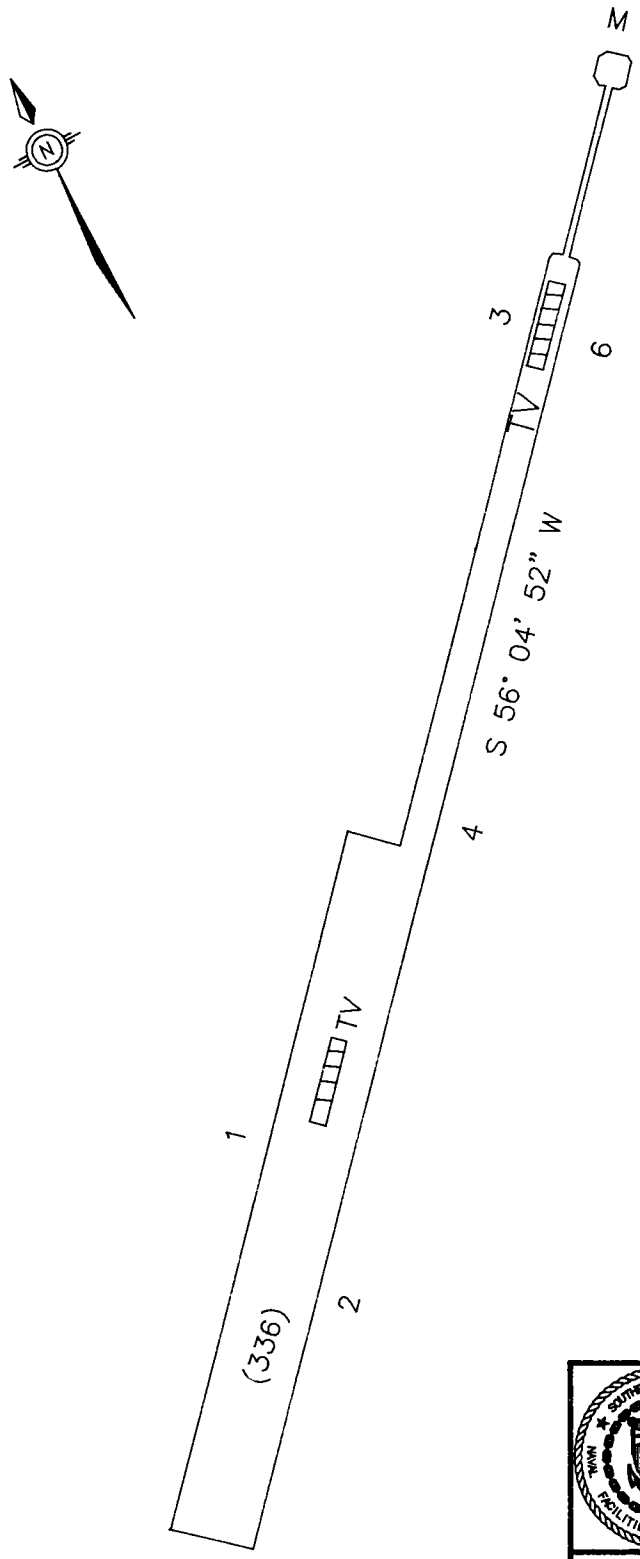

NOT TO SCALE

RCRA FACILITY
ASSESSMENT
NAVAL COMPLEX
CHARLESTON, S.C.

FIGURE 4-27
PAOC #26
PIER M, LAYDOWN AREA

NOTE: THE EXACT LOCATION OF PAOC #26 IS NOT KNOWN.

DWG DATE: 02/16/94 | DWG NAME: 29AOC26

4.29.6 Recommended Action

There is no evidence of a release from this unit. However, confirmation sampling is recommended due to the nature of the waste and the design of the unit which may allow migration of any potential releases.

4.30 PAOC #27 — Abrasive Blast Media Storage Area

4.30.1 Unit Characteristics

Buildings 1364, 1365, and 1393 each contain a blast hopper used for temporary storage of abrasive blast media unloaded via truck from rail cars prior to transfer to various sandblast facilities on the base. Two hoppers have operated since 1949; the third (Building 1393) was installed in 1962. The hoppers were added to the Bureau of Air Quality Control Permit Number 0560-0002 in 1992. Figure 1-1 locates the blast media storage area within the Charleston Naval Complex. Figure 4-28 locates the position of the hoppers.

4.30.2 Waste Characteristics

In the past, the hoppers contained blast grit. The constituents of this grit are unknown. An undated inventory lists each hopper using 200 lbs/year of aluminum oxide.

4.30.3 Migration Pathways

Soil is a viable migration pathway due to the heavy layer of blast media surrounding the hoppers. Groundwater, subsurface gas, and surface water are also potential migration pathways due to the residual blast media surrounding the hoppers and the uncertainty of its content.

4.30.4 Evidence of Release

No environmental incident reports were on file but blast media is visible throughout the immediate area.

4.30.5 Exposure Potential

This PAOC is not in close proximity to any residential areas or sensitive environments. The Complex employees may be exposed to airborne blast media.

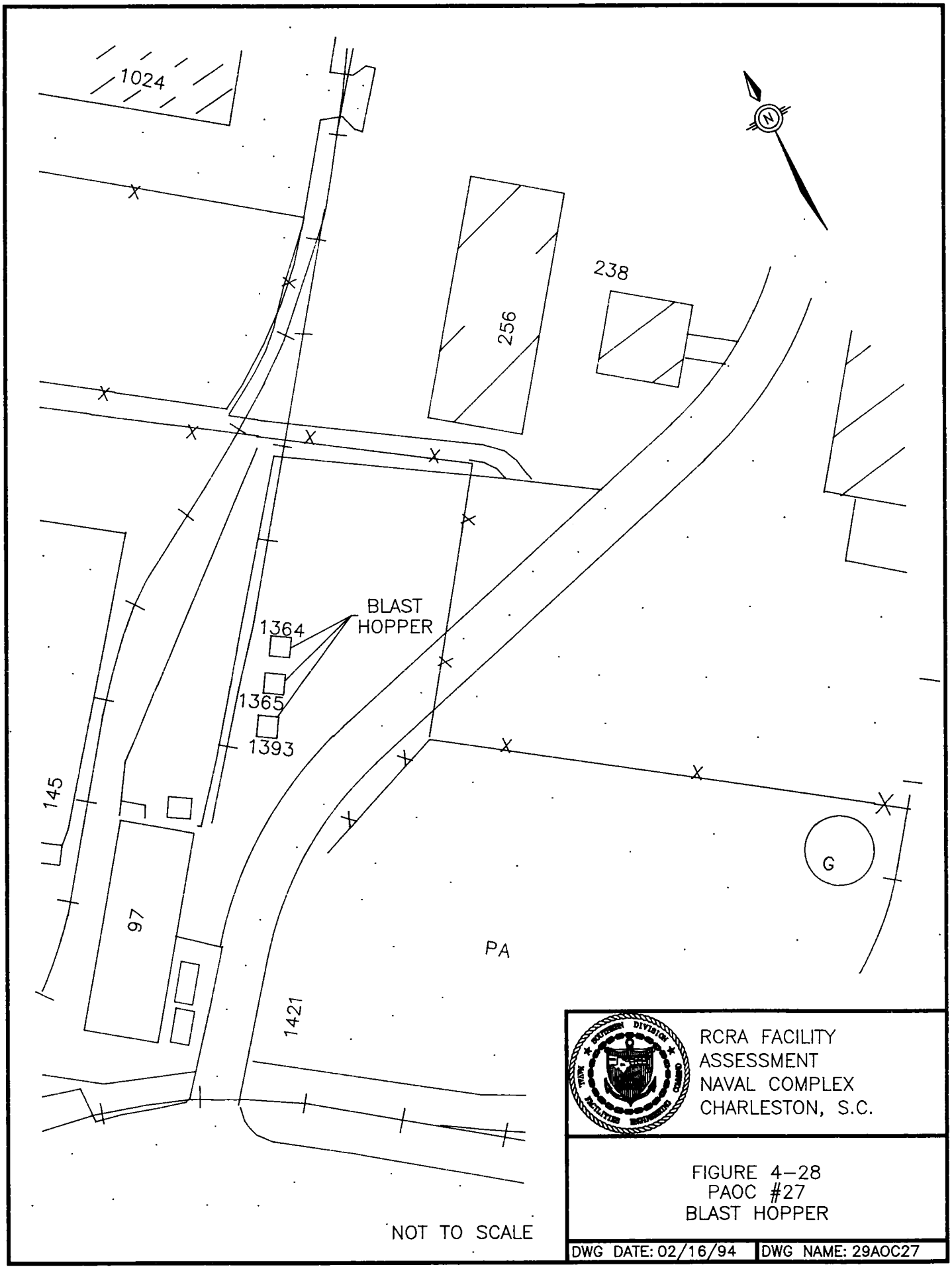
1024
256
238
BLAST
HOPPER
1364
1365
1393
145
97
1421
PA
G
NOT TO SCALE
RCRA FACILITY
ASSESSMENT
NAVAL COMPLEX
CHARLESTON, S.C.
FIGURE 4-28
PAOC #27
BLAST HOPPER
DWG DATE: 02/16/94
DWG NAME: 29AOC27

4.30.6 Recommended Action

There is no evidence of a release from this unit. However, confirmation sampling is recommended due to uncertainty about the nature of the waste and the design of the unit which may allow migration of any potential releases.

4.31 PAOC #28 — Forge Shop, Building 6

4.31.1 Unit Characteristics

The foundry was constructed in 1906 and a pump, valve, and propeller repair shop was added between 1963 and 1967. Various metal-working processes are conducted in the Forge shop. Figure 1-1 locates Building 6 within the Charleston Naval Complex. Figure 4-29 locates the PAOC within Building 6.

4.31.2 Waste Characteristics

Materials used at the forge shop include lead, zinc, babbitt, oil, ceramic fiber on furnaces, galvanizing flux (zinc ammonium chloride), charcoal coke, and salt.

4.31.3 Migration Pathways

Because cracks are evident in the block floor, soil and groundwater are potential migration pathways. Air emissions may be generated by the various metal working processes.

4.31.4 Evidence of Release

No spill reports, inspection reports, or employee interviews indicate spills at this site. However, heavy stains are evident on the floors in several areas.

4.31.5 Exposure Potential

This PAOC is not in close proximity to any residential areas or sensitive environments. Naval Complex employees may be exposed to potential air emissions.

4.31.7 Recommended Action

Due to the evidence of past releases and lack of a thorough assessment of the potential hazards associated with these releases, a RFI is recommended.

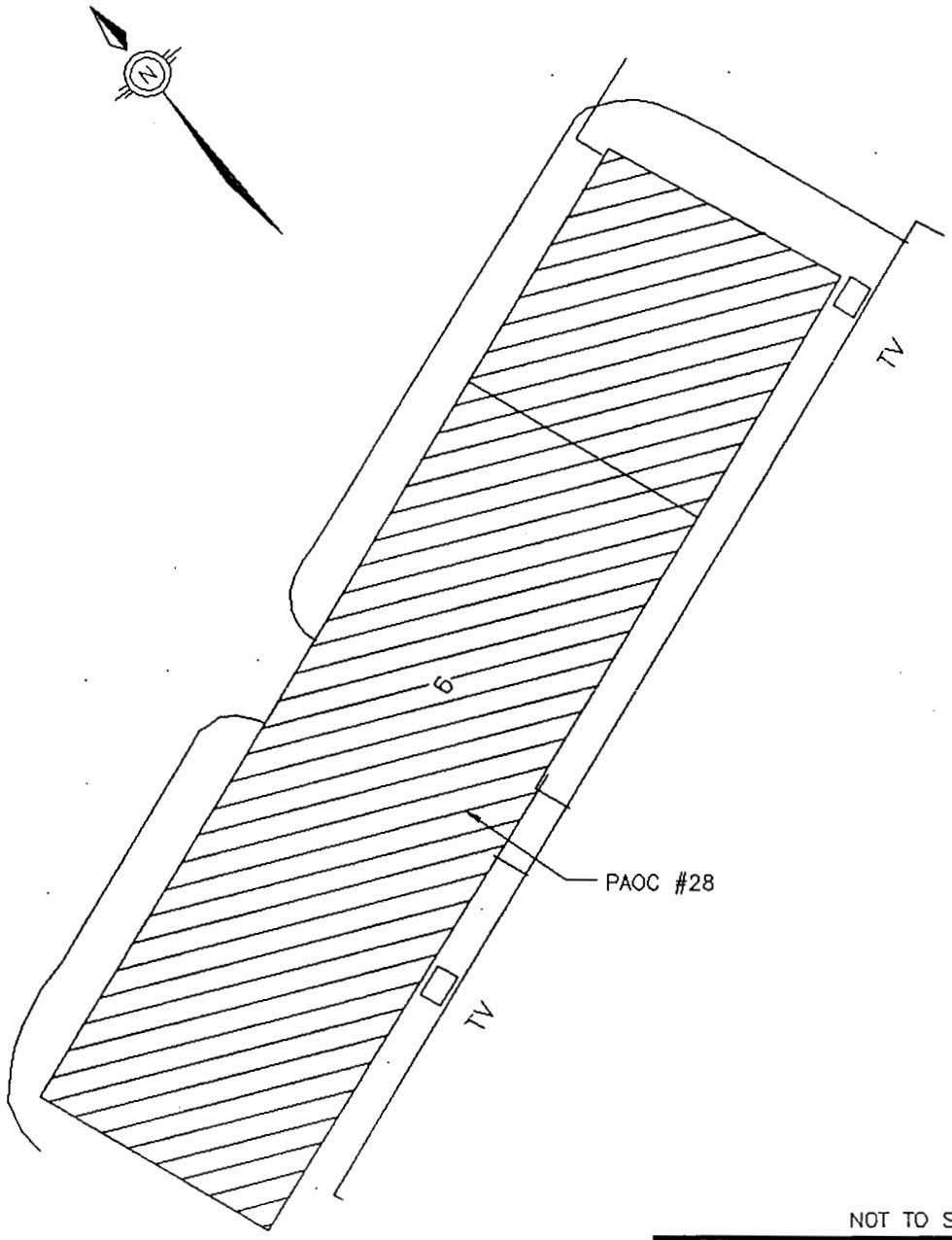

NOT TO SCALE

RCRA FACILITY
ASSESSMENT
NAVAL COMPLEX
CHARLESTON, S.C.

FIGURE 4-29
PAOC #28
BUILDING 6, FORGE SHOP

DWG DATE: 02/10/94 | DWG NAME: 27N6

4.32 PAOC #29 — Wash Area, Building 233

4.32.1 Unit Characteristics

This PAOC was previously used for spray washing of vehicles and equipment. It is now used as a lead-acid battery charging facility. Building 233 was constructed in 1972 with a concrete block structure and a metal frame and roof. The building is enclosed on three sides, with an open side facing east. A large drain is in the area where runoff from wash area activities occurred. Figure 1-1 locates Building 233 within the Naval Base. Figure 4-30 locates PAOC 28 within Building 233.

4.32.2 Waste characteristics

It is suspected that petroleum, acid, and metal wastes may have been generated.

4.32.3 Migration Pathways

Soil, groundwater, and surface runoff are potential migration pathways.

4.32.4 Evidence of Release

The asphalt and concrete in the vicinity of the wash area and beneath a 55-gallon drum storage rack appear stained with either petroleum or acid.

4.32.5 Exposure Potential

This PAOC is not in close proximity to any residential areas or sensitive environments. The nature of the wastes and the limited storage capacity at this unit limit the potential for exposure.

4.32.6 Recommended Action

Due to the evidence of past releases and lack of a thorough assessment of the potential hazards associated with these releases, a RFI is recommended.

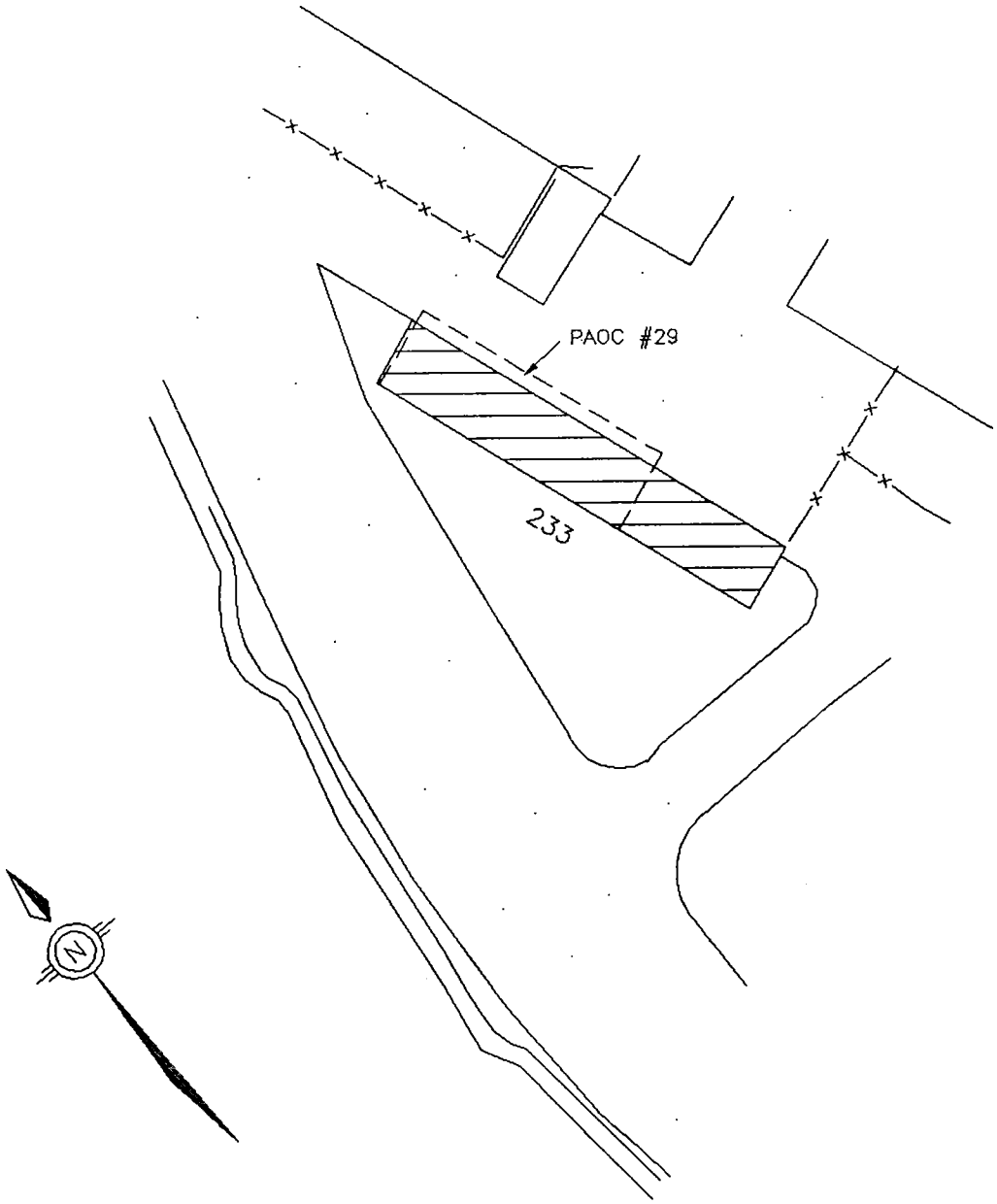

NOT TO SCALE

RCRA FACILITY
ASSESSMENT
NAVAL COMPLEX
CHARLESTON, S.C.

FIGURE 4-30
PAOC #29
BUILDING 233, WASH AREA

DWG DATE: 02/10/94 | DWG NAME: 27N233

4.33 PAOC #30 — Hobby Shop, Building 1508

4.33.1 Unit Characteristics

PAOC #30 is the Morale, Welfare, and Recreation Department hobby shop. The hobby shop was constructed in 1972. It is used for both civilian and military personnel to perform maintenance on their vehicles. The hobby shop has also been used for steam cleaning, painting, and miscellaneous automotive repairs. Figure 1-1 locates Building 1508 within the Charleston Naval Complex. Figure 4-31 locates the PAOC within Building 1508.

Building 1508 is constructed of cinder block walls, a metal roof, and a concrete floor. The paint at the building is in poor condition. There are two hydraulic lifts inside the building, and one outside. A two-bay car wash is attached to the building. Three steel 40-gallon hydraulic fluid storage tanks (approximately 22 years old) are present at the facility. These tanks operate the hydraulic jack that is located at the north end of the facility. One of the tanks is underground. According to Bubba Gusta, the facility manager, this tank leaks severely. He estimated that 100 gallons of hydraulic fluid may have leaked from this tank in the past year (1993). Use of this tank has been discontinued (date unknown), and is still onsite. No floor drains or sumps are known to be present or to have been present on the property. Potable water for Building 1508 is supplied by the Charleston Commission of Public Works. According to the 1983 Initial Assessment Study of Naval Base Charleston, Charleston, South Carolina by Environmental Science and Engineering, Inc., Building 1508 was constructed on fill material.

4.33.2 Waste characteristics

Materials used at Building 1508 include CC92 Parts Cleaner, CC13 Liquid H-Press Wash Compound Carwash, Spray Wax KO Number 303, Hi-Foam, CC18 Hot Tank Cleaner, Freon, glass cleaner regular, and detergent-general purpose. Other materials stored include oily rags, empty oil cans, and oil-dry compound. The major constituents of concern are volatile organic compounds and petroleum hydrocarbons.

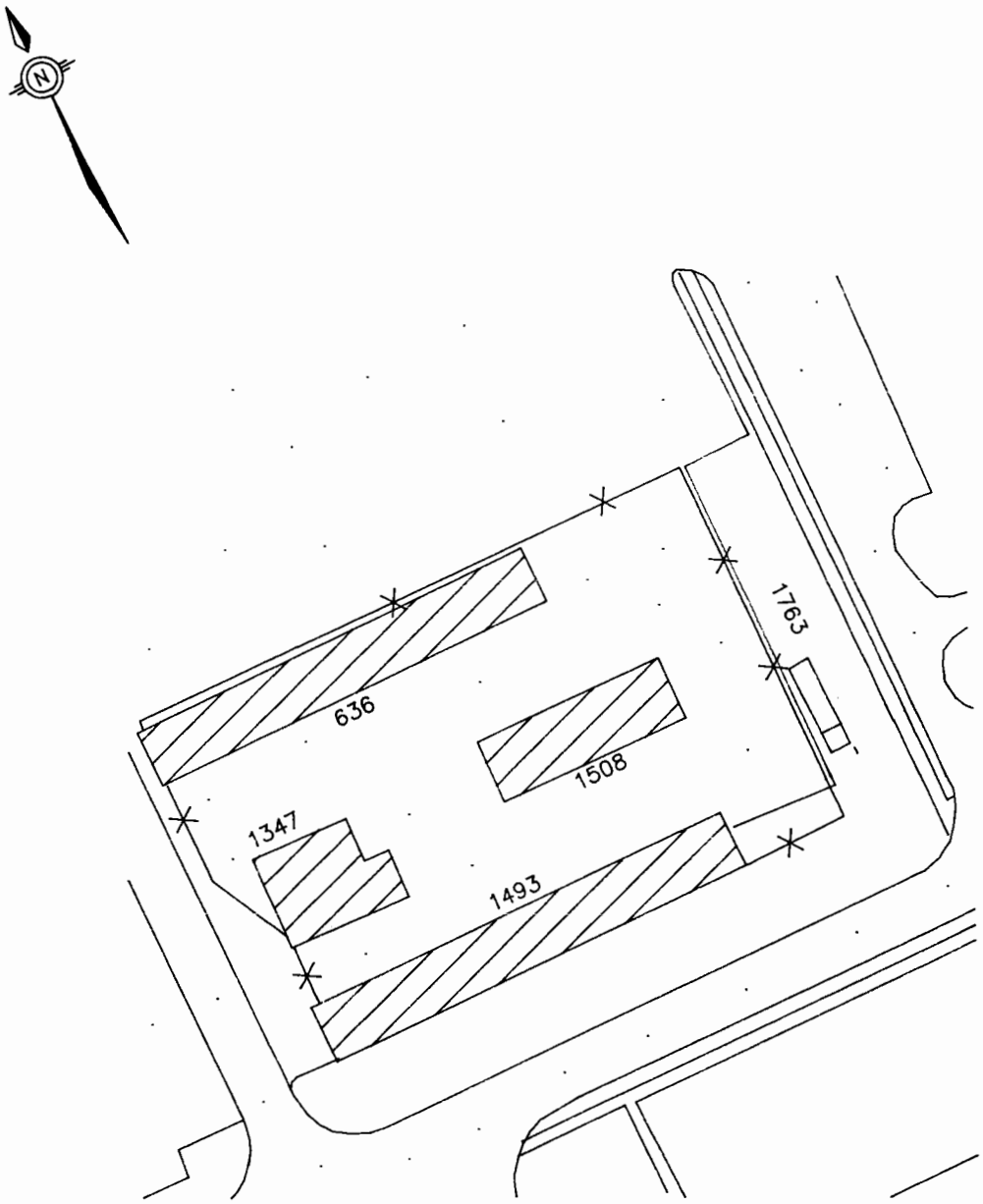

NOT TO SCALE

RCRA FACILITY
ASSESSMENT
NAVAL COMPLEX
CHARLESTON, S.C.

FIGURE 4-31
PAOC #30
BUILDING 1508
MWR HOBBY SHOP

DWG DATE: 02/16/94 | DWG NAME: 29AOC30

4.33.3 Migration Pathways

Soil, groundwater, and surface runoff are migration pathways. Wastewater and sanitary wastes from Building 1508 are discharged to the North Charleston Sewer District sanitary sewer system.

4.33.4 Evidence of Release

According to a Zone Inspection Report for Zone 22, dated 7-31-91, excessive oil residue was present on the pavement in the vicinity of the hydraulic lifts and the spray wash areas. Oil residue had soaked into the asphalt and could not be cleaned by absorbent material. Oil stains, in general, are present in and around Building 1508. Petroleum odors are evident.

4.33.5 Exposure Potential

This PAOC is not in close proximity to any residential areas or sensitive environments. Workers who frequent this area may be exposed.

4.33.6 Recommended Action

Due to the evidence of past releases and lack of a thorough assessment of the potential hazards associated with these releases, a RFI is recommended.

4.34 PAOC #31 — Building 9 Fuel Tank

4.34.1 Unit Characteristics

PAOC #31 is a 3700 gallon above ground fuel tank located in an area adjacent (east) to Building 9. The fuel tank is no longer in use. At one time, this tank served the foundry's furnaces and torches, and contained number 2 fuel oil. The period of operation of the tank is not known. Heavy corrosion/rust stains are evident on the unpainted exterior of the tank. No secondary containment is provided for release protection and bare ground is exposed beneath the tank. Figure 1-1 depicts the location of the Building 9 within the Naval Complex. Figure 4-32 illustrates the approximate location of the fuel tank in relation to Building 9.

4.34.2 Waste Characteristics

Number 2 fuel oil was reportedly stored in the tank.

4.34.3 Migration Pathways

Due to the nature of the contents of the tank, soil and groundwater would be viable migration pathways should a release occur. Air would not be considered a significant migration pathway unless a substantial amount of the contents of the tank were released. Soil gas migration or volatile constituents could occur given the location of the tank in close proximity to structures and paved surfaces which could trap subsurface gases. Releases from this unit to surface water bodies is not expected given the location of the site.

4.34.4 Evidence of Release

Zone Inspection Reports dated April 5, 1991, August 6, 1991, June 26, 1992, and September 30, 1993, and Environmental Incident Report 90-146, report oil residue under the tank. The September 30, 1993 report also states that dirt along the edge of the street in the vicinity was very oily. Oil residue is still currently evident under the tank.

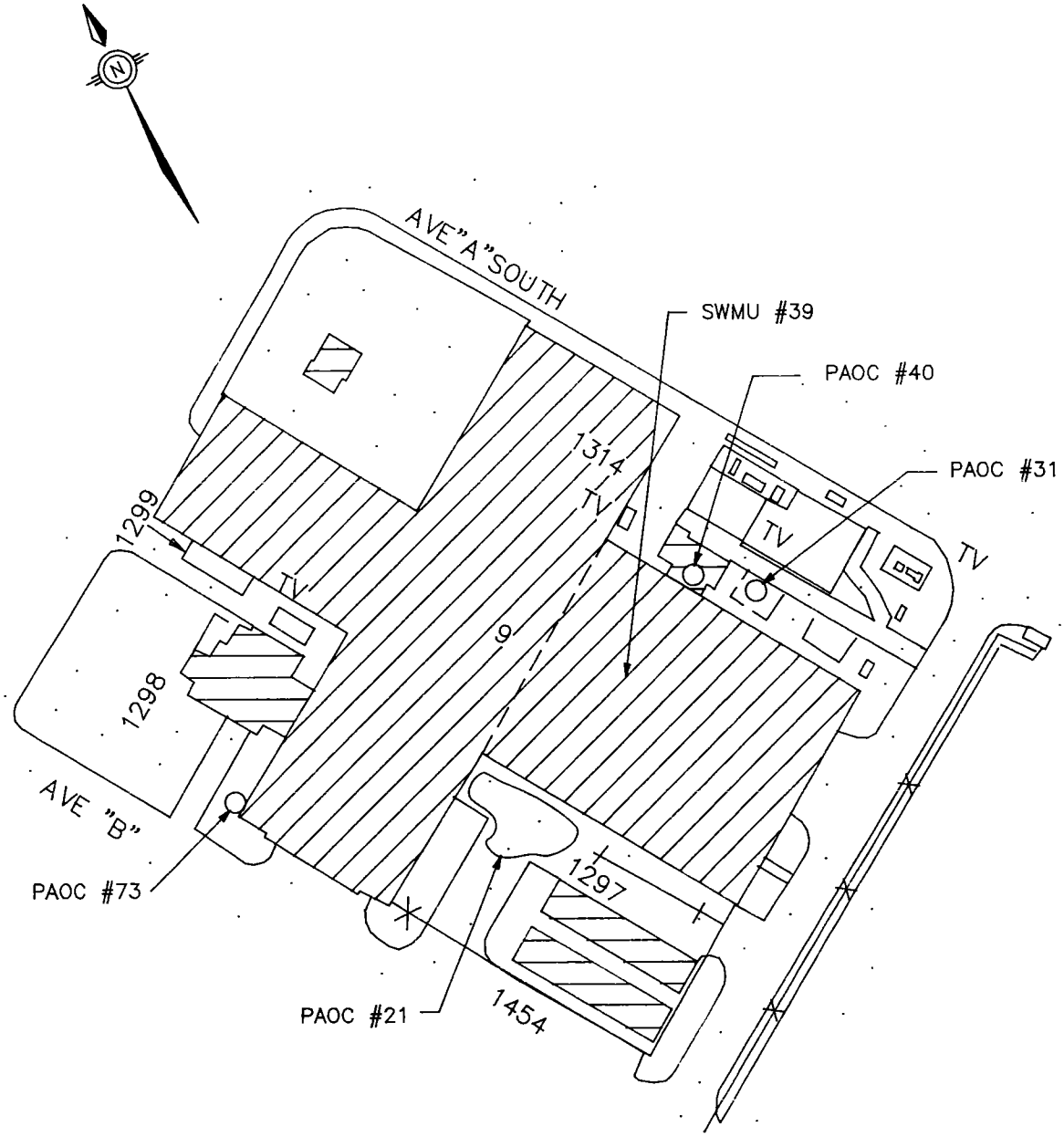

NOT TO SCALE

RCRA FACILITY
ASSESSMENT
NAVAL COMPLEX
CHARLESTON, S.C.

FIGURE 4-32
PAOC #31
BUILDING 9, SAA

DWG DATE: 02/16/94 | DWG NAME: 29AOC31

4.34.5 Exposure Potential

The PAOC is not close to any residential areas or sensitive environments. Exposure to releases from the fuel tank is most likely to be limited to site workers.

4.34.6 Recommended Action

Due to the evidence of past releases and a lack of a thorough assessment of the potential hazards associated with these releases, a RFI is recommended.

4.35 PAOC #32 — CBU-412 Vehicle Maintenance Area

4.35.1 Unit Characteristics

PAOC #32 is an area associated with Building 1776 used for the routine maintenance of automotive and heavy equipment. The maintenance includes oil changes and the repair of hydraulic parts from the equipment. Figure 1-2 locates Building 1776 within the Naval Complex. Figure 4-33 depicts the location of PAOC #32 in relation to Building 1776.

PAOC #32 is a two-story brick structure. On the east side of Building 1776 is an oil/water separator. There is a 550-gallon portable storage tank that is used to store waste oil. Building 1776 was built in 1971; however, the date of initial operation of PAOC #32 is unknown.

The routine maintenance of automotive and heavy equipment is the only activity that has occurred. When necessary, the oil/water separator is pumped dry and steam cleaned. When the 550-gallon portable storage tank is full, the used oil is transferred to the DRMO for reuse.

4.35.2 Waste characteristics

Transmission fluid, anti-freeze, and engine oil are used in PAOC #32 (all stored in 65-gallon metal dispensers). Other hazardous materials used at this facility that could enter the waste stream include starting fluid, isopropyl alcohol, corrosion inhibitor, windshield solvent, silicone brake fluid, diesel fuel conditioner, grease, degreaser, and propane. A Zone Inspection Report dated 7-2-91 reports that used automobile batteries were stored outside the building exposed to the elements.

4.35.3 Migration Pathways

The ground surface surrounding PAOC #32 is covered with asphalt. No cracks were observed in the asphalt and it possible that the asphalt would inhibit the migration of contaminants to the underlying soil and groundwater should a release occur. The asphalt is not a totally impermeable barrier however, and the possibility exists that media under the asphalt surface

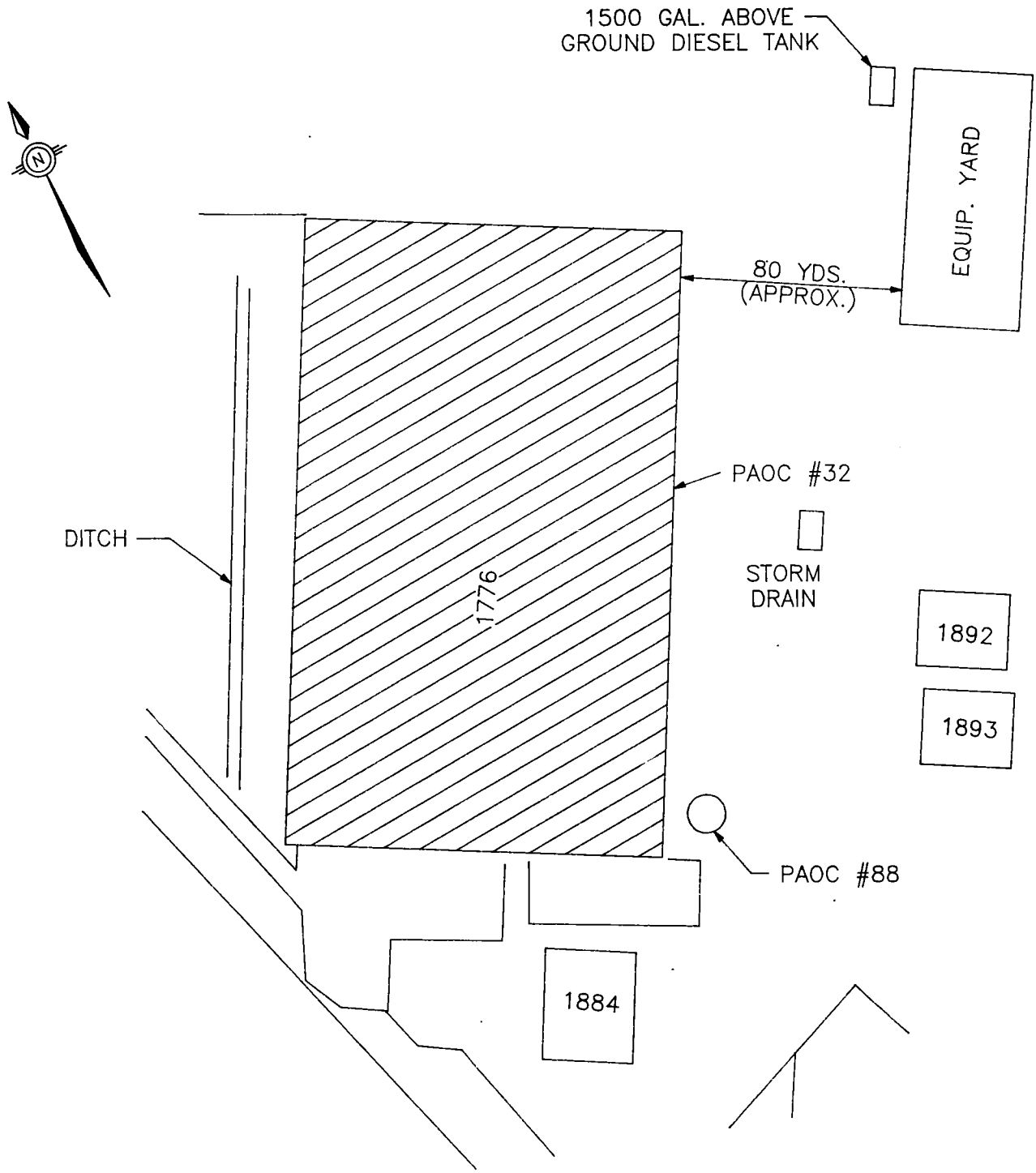

NOT TO SCALE

RCRA FACILITY ASSESSMENT
NAVAL COMPLEX
CHARLESTON, S.C.

FIGURE 4-33
PAOC #32
BUILDING 1176
VEHICLE MAINTENANCE AREA

DWG DATE: 02/16/94 | DWG NAME: 29AOC32

could be affected. A storm drain located immediately to the north of the maintenance area does receive runoff from the PAOC which could potentially impact the Cooper River.

4.35.4 Evidence of Release

Oil and paint stains were noticed in and around Building 1776. Stormwater flow is to the north to a storm drain in the paved area of the CBU-412 compound. A Zone Inspection Report (7-9-93) reports several oil spills left unattended.

Waste oil from the 300-gallon waste oil tank was sampled on 6-30-88 and analyzed for flash point (failed at 80 F) and chromium (39 ppm). The waste oil was also sampled on 11-9-89 and analyzed for flash point (>140 F), total halogens (0.05 wt%), pH (7.00 @ 19 C), arsenic (<1.00 ppm), cadmium (0.58 ppm), chromium (1.98 ppm), and lead (6.65 ppm).

4.35.5 Exposure Potential

This PAOC is not in close proximity to any residential areas. Releases from this PAOC would could affect site workers and potentially impact the Cooper River if allowed to enter the storm drain system.

4.35.6 Recommended Action

Due to evidence of past releases and a lack of a thorough assessment of the potential hazards associated with these release, a RFI.

4.36 PAOC #33 — Motor Area, Building 177

4.36.1Unit Characteristics

PAOC #33 is a paved area adjacent to Building 177 which was previously used for steam cleaning electrical motors and equipment. Figure 1-1 depicts the location of Building 177 within the Naval Complex and Figure 4-34 illustrates the location of PAOC #33 in relation to the building. The pavement at the edge of the building is receding from the foundation. Cracks in the asphalt surface where the steam cleaning occurred have been noted.

4.36.2Waste characteristics

Grease, varnish, and graphite have been used at this PAOC. The major constituents of concern are volatile organic compounds and petroleum hydrocarbons.

4.36.3Migration Pathways

The potential for soil and groundwater impacts is likely at this POAC due to the types of the contaminants likely to be present in this area, the nature of the operations conducted there, and the condition of the asphalt surface. Documentation exists that water from operations conducted in this areas were discharged to a nearby storm drain which could possibly lead to a release into the Cooper River.

4.36.4 Evidence of Release

A Zone Inspection Report dated 7-11-91 states that water and pollutants generated from the pressure washing of machinery being conducted behind Building 177 were allowed to flow into storm drains. Staining is evident in several places on the asphalt.

4.36.5 Exposure Potential

This PAOC is not in close proximity to any residential areas. The risk of exposure of site workers to hazardous materials is not expected to be great; however, the potential does exist.

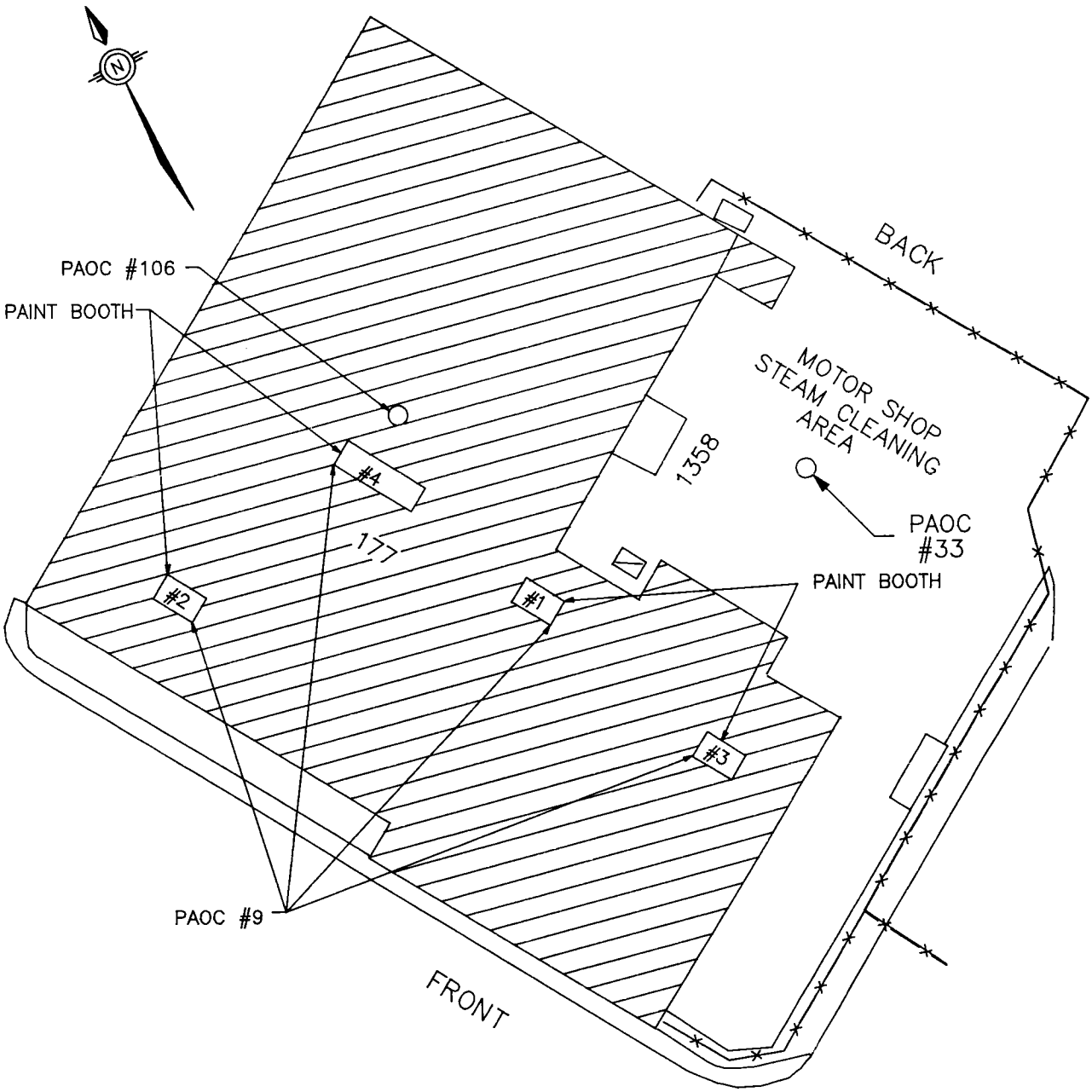

NOT TO SCALE

RCRA FACILITY
ASSESSMENT
NAVAL COMPLEX
CHARLESTON, S.C.

FIGURE 4-34
PAOC #33
BUILDING 177, SAA, MOTOR AREA

DWG DATE: 02/16/94 | DWG NAME: 29AOC33

Exposure of sensitive environments to releases from this area are likely to be limited to discharges to the Cooper River via the storm drains.

4.36.6 Recommended Action

Due to evidence of past releases and lack of a thorough assessment of the potential hazards associated with these releases, a RFI is recommended.

4.37 PAOC #34 — DRMO, Building 1640

4.37.1 Unit Characteristics

This unit is a storage area operated by the Naval Shipyard with Defense Reutilization and Marketing Office (DRMO) oversight for hazardous waste awaiting shipment for disposal. Building 1640 is a 36,000 square foot structure with 14 module bays built circa 1989 to RCRA Part B specifications for the purpose of storing hazardous wastes. Figure 1-1 locates Building 1640 within the Naval Complex. Figure 4-35 locates the PAOC within Building 1640.

During a site survey conducted in January 1994, the site appeared clean and containers of various sizes were stored in designated locations, both on pallets and shelves.

4.37.2 Waste Characteristics

This PAOC temporarily stores hazardous waste awaiting shipment for proper disposal. Therefore, the type of waste stored at this facility is variable but encompasses much of the hazardous waste generated at the NSY.

4.37.3 Migration Pathways

Because the wastes stored at PAOC #34 are stored in a facility designed to contain any releases that may occur and the waste is handled by trained personnel, the potential for migration of contaminants is unlikely.

4.37.4 Evidence of Release

No evidence of a release from this unit has been documented by incident reports. During the visual site inspection, no physical evidence of a release was observed and interviews conducted with site workers did not reveal knowledge of past releases.

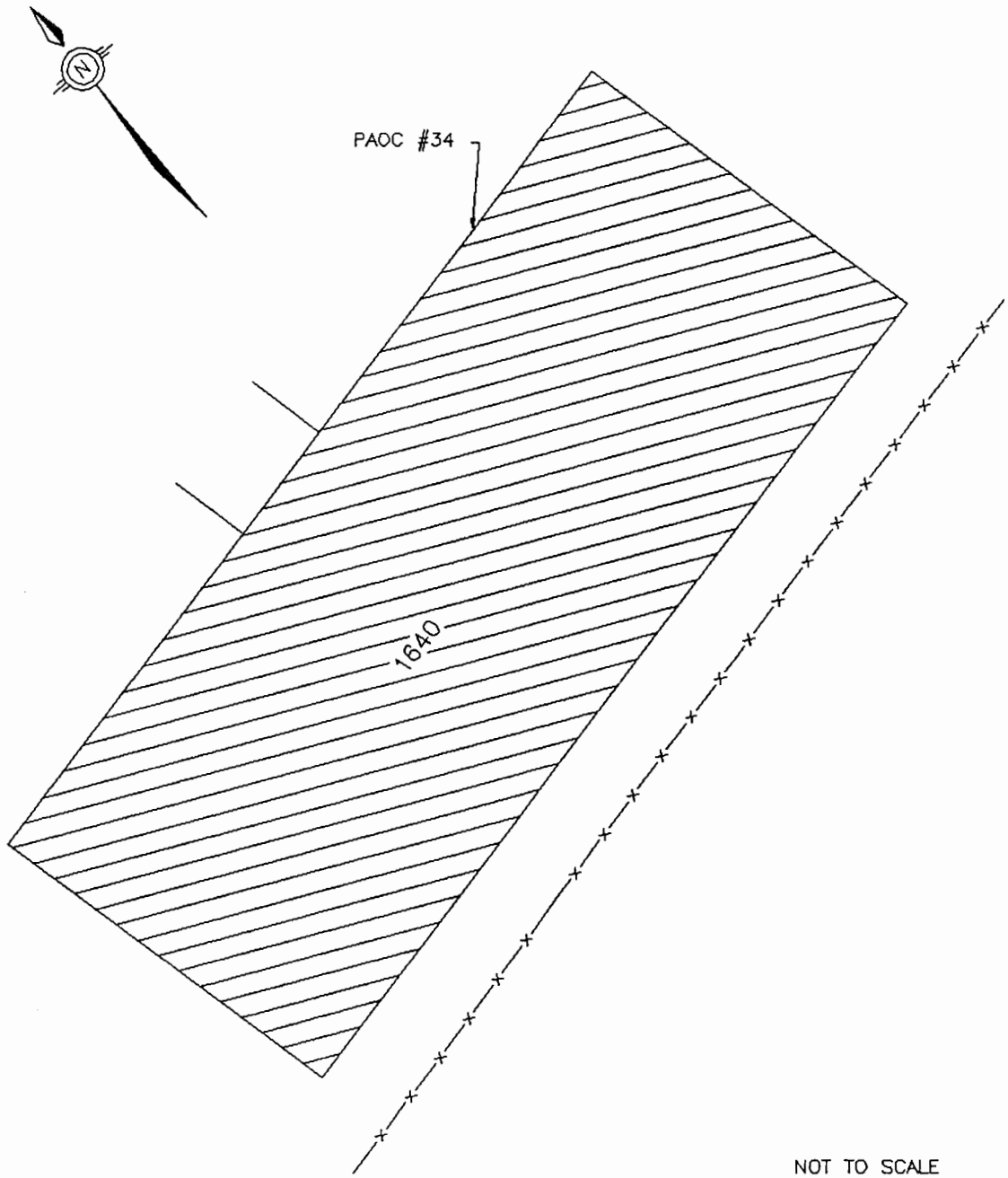

NOT TO SCALE

RCRA FACILITY
ASSESSMENT
NAVAL COMPLEX
CHARLESTON, S.C.

FIGURE 4-35
PAOC #34
BUILDING 1640, DRMO

DWG DATE: 02/10/94 | DWG NAME: 27N1640

4.37.5 Exposure Potential

This PAOC is not in close proximity to any residential areas; however,the Cooper River is within approximately 200 feet of Building 1640. Due to design features of the building and restricted access, the risk of exposure should be limited to site workers.

4.37.6 Recommended Action

No further investigation of this PAOC is recommended due to the storage practices, design features of the building, the limited migration pathways, and lack of evidence of past releases.

4.38 PAOC #35 — Former POL Drum Storage Area, Building 1604

4.38.1 Unit Characteristics

PAOC #35 is a former storage area for petroleum, oil, and lubricant (POL) drums located on an asphalt-paved area north of Building 1604. POL drum storage operations were discontinued (date unknown) and the area is currently an outdoor storage yard for DRMO. No POL containers were observed during a site visit on February 3, 1994. Figure 1-1 locates the unit within the Naval Complex. Figure 4-36 depicts the location of the PAOC in relation to Building 1604.

4.38.2 Waste Characteristics

This PAOC is a former POL drum storage site and the waste constituents associated with it are likely to be petroleum-related. No inventory of POL or other hazardous wastes possibly stored here was available.

4.38.3 Migration Pathways

Should any of the liquid previously stored here have reached the asphalt, it would have likely flowed to the stormwater catch basin, then directly to the Cooper River. The potential for migration of contaminants through the asphalt to the underlying soil and shallow groundwater is possible. Soil gas migration is also considered a viable pathway if vapors resulting from the volatilization of petroleum hydrocarbons trapped were to accumulate.

4.38.4 Evidence of Release

Past excavations have revealed petroleum-contaminated soil. No spill reports, inspection reports, employee interviews or visual observations indicated the incidence of spills at this unit. No sampling has been conducted to assess the contamination potential at this PAOC.

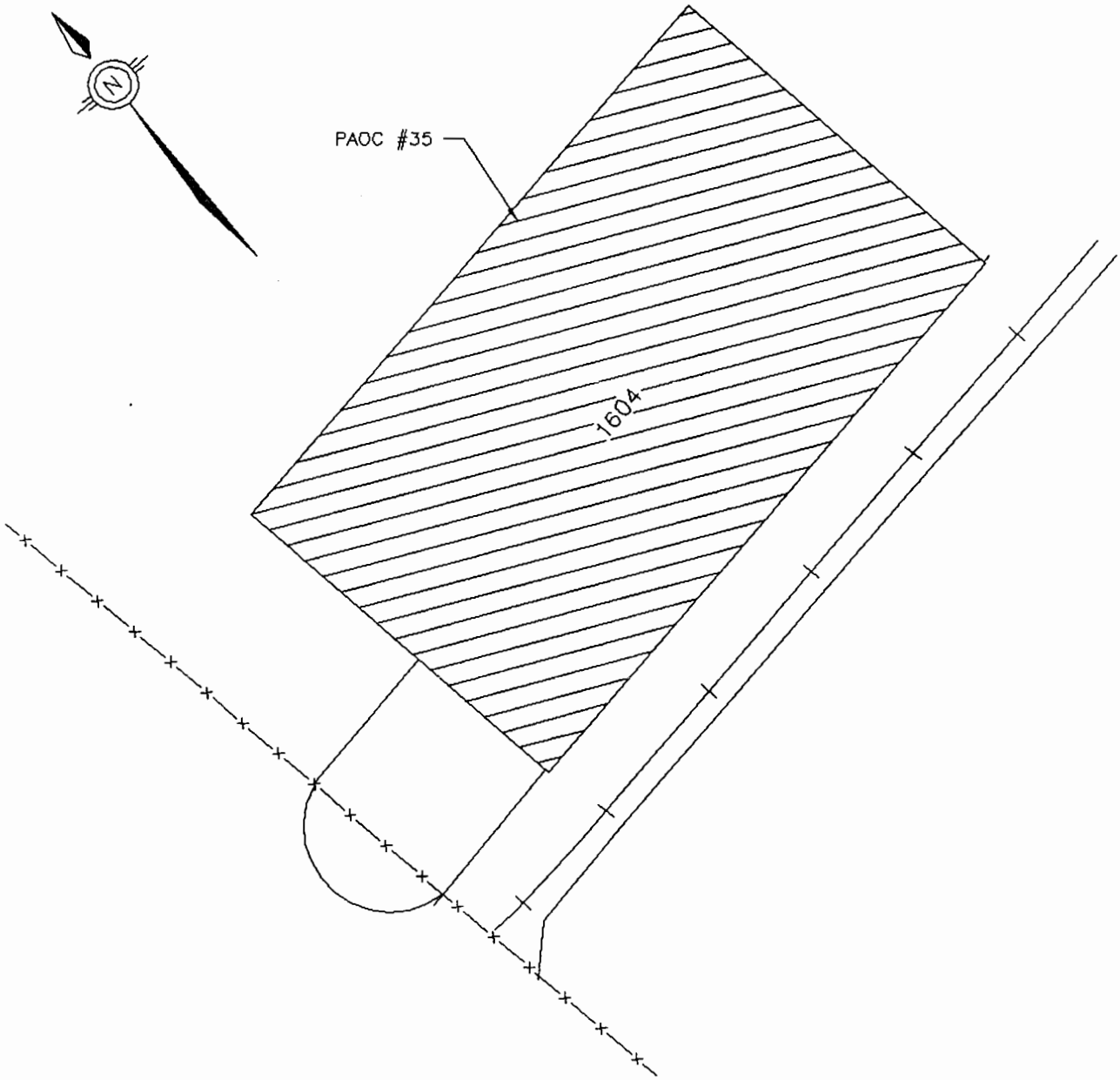

NOT TO SCALE

RCRA FACILITY
ASSESSMENT
NAVAL COMPLEX
CHARLESTON, S.C.

FIGURE 4-36
PAOC #35
BUILDING 1604, POL DRUM STORAGE

DWG DATE: 02/10/94 | DWG NAME: 27N1604

4.38.5 Exposure Potential

Since the area is no longer used for storage, the current potential impacts this site may have on the Cooper River is thought to be minimal. There is evidence that releases have occurred which creates a potential risk for exposure to site workers, particularly those whose job may require excavation in the area.

4.38.6 Recommended Action

Due to the evidence of past releases and lack of a thorough assessment of potential hazards associated with these releases, a RFI is recommended.

4.39 PAOC #36 — Former Gasoline Station, Building NS-54

4.39.1 Unit Characteristics

PAOC #36 is a former service station and is currently being used as a non-hazardous material storage area. Figure 1-2 locates Building NS-54 within the Naval Complex. Figure 4-37 depicts are larger scale drawing of the PAOC.

The facility served as a gas station from its construction in 1958 until it was converted to storage space. The date of this conversion is unknown. Communications with the point-of-contact suggested the presence of two unregistered, steel, USTs. The size, containment, corrosion protection, removal/closure details are unknown. Records also indicate that this area was once the site of a billeting office; date and description of this structure are unknown.

4.39.2 Waste Characteristics

PAOC #36 is the location of two potential USTs reportedly used for the storage of gasoline. Contaminants associated with this POAC would include petroleum hydrocarbons and possibly lead.

4.39.3 Migration Pathways

If contamination is present as a result of leaking USTs or associated piping, soil and groundwater would likely be the primary routes of contaminant migration. Petroleum hydrocarbons present in the vapor phase would be a distinct possibility, especially if the gas were to become trapped under and a relatively impermeable cap such as asphalt or a building foundation.

4.39.4 Evidence of Release

No spill reports, inspection reports, employee interviews, or physical evidence confirmed that a release had occurred at this PAOC.

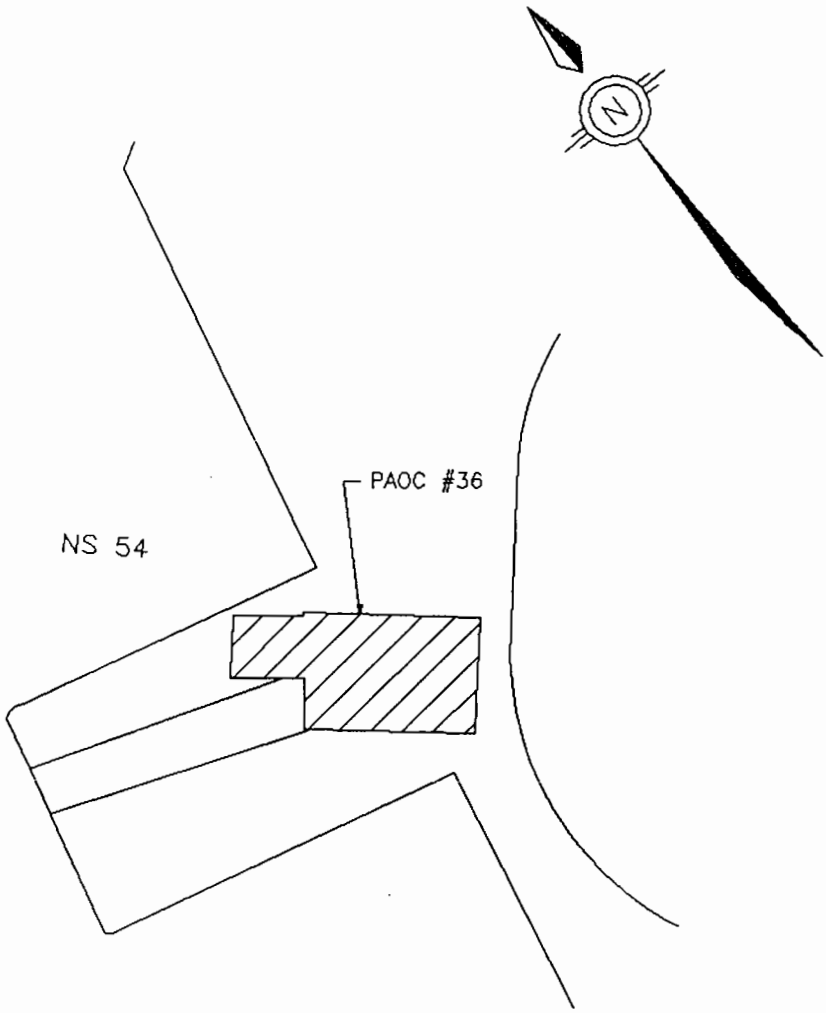

NOT TO SCALE

RCRA FACILITY
ASSESSMENT
NAVAL COMPLEX
CHARLESTON, S.C.

FIGURE 4-37
PAOC #36
BUILDING NS-54
FORMER GAS STATION

DWG DATE: 02/12/94 | DWG NAME: 27SNS54

4.39.5 Exposure Potential

This PAOC is not in close proximity to any residential areas or sensitive environments. The If contamination is present, the greatest risk posed would be to site workers whose job may require excavating in the area.

4.39.6 Recommended Action

There is no evidence of a release from this PAOC; however, confirmation sampling is recommended due to the nature of the materials stored and the manner in which the materials were stored.

4.40 PAOC #37 — Unexploded Ordnance (UXO)

4.40.1 Unit Characteristics

Historical base maps of the Charleston Naval Complex indicate four locations where various UXO were either jettisoned or dropped within Naval Complex or in the Cooper River. Those locations are indicated on Figures 1-1 and 1-2. Known UXO includes four AN Mark-47 depth bombs (two at Figure 1-2 map coordinates L7 and two at coordinates N16); two Mark 17 depth bombs (Figure 1-2 map coordinates D16); and three 5" artillery shells (Figure 1-1 map coordinates, J35).

4.40.2 Waste Characteristics

Propellants, Explosives and Pyrotechnics (PEP) are known to contain Class A or B explosive compounds and metals. Class A and B explosives are classified under RCRA as reactive hazardous wastes (Waste Number D003). Some igniters contain sufficient leachable concentrations of metals to classify as hazardous waste under the toxicity characteristic.

4.40.3 Migration Pathways

Three of the known UXO locations are under water. If the PEP contents escape the ordnance casings, reactive/toxic constituents could be released into sediment and the surrounding water. If the casings of the Mark-17 depth bombs, jettisoned over land in 1943, have released their contents, soil and groundwater contamination with reactive/toxic constituents could have resulted.

4.40.4 Evidence of Release

The base map indicates the dates of deposition of the UXO (all dates are 1943-45). No records of the subsequent fate of any of the ordnance items have been located. Therefore, the likelihood of a chemical release is unknown.

4.40.5 Exposure Potential

The most severe threat posed by UXO is to human safety. That threat is substantially intensified by any attempt to remove the UXO from it's present location. If the PEP contents escape the submerged ordnance casings, dilution of their concentration in 30-42 feet of the overlying water column is expected to eliminate any chemical risks to humans or aquatic life. Escape of PEP constituents from the buried bombs would impact deep soil, and possibly shallow groundwater; however, direct human exposures are unlikely.

4.40.6 Recommended Action

Even though precise information related to the location of the UXO is limited, the intention of the US Navy to eliminate contamination prior to release of property to civilian authorities dictates an attempt to locate the UXO and assess any real threat to public safety or human health or environment. Therefore, a RCRA Facility Investigation is warranted and recommended.

4.41 PAOC #38 — Satellite Accumulation Area, Building 43

4.41.1 Unit Characteristics

This Satellite Accumulation Area (SAA) is an element of the Naval Shipyard hazardous waste management system. Hazardous wastes are accumulated at an SAA until 55-gallons of waste are accumulated [in accordance with 40 CFR 262.34(c)], then immediately transferred to a permitted hazardous waste storage facility prior to transport off the Naval Complex for ultimate treatment or disposal. Figure 1-1 locates Building 43 within the Naval Base. Figure 4-38 depicts the approximate location of the SAA in relation to Building 43. Wastes are stored in plastic bags and drums which are on a pallet. No containment berm exists. The approximate size of the satellite accumulation area is 12'x 8'.

4.41.2 Waste Characteristics

Oily rags, miscellaneous spill residue, used coolant, dry cleaning solvent, spent halogenated hydrocarbon solvents, and used petroleum naphtha solvent are stored at this SAA. The major constituents of concern are volatile organic compounds and petroleum hydrocarbons.

4.41.3 Migration Pathways

Should a release occur, soil and groundwater would be viable contaminant migration pathways considering the nature of the wastes stored in this SAA. Soil gas transport of constituents present would also be a distinct possibility.

4.41.4 Evidence of Release

No incident reports, inspection reports, employee interviews, or physical evidence indicate the that a release has occurred at this SAA.

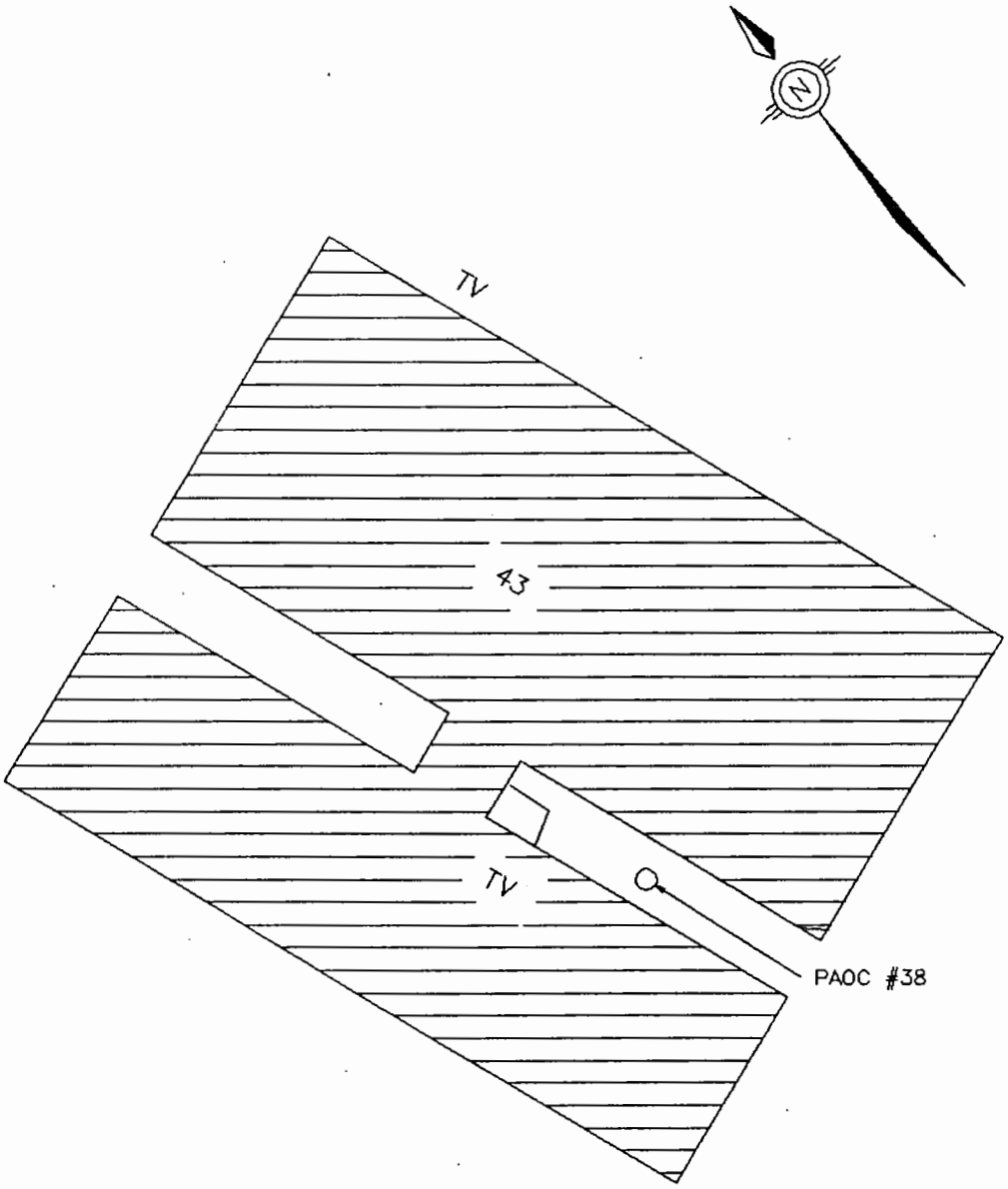

NOT TO SCALE

RCRA FACILITY
ASSESSMENT
NAVAL COMPLEX
CHARLESTON, S.C.

FIGURE 4-38
PAOC #38
BUILDING 43, SAA

DWG DATE: 02/10/94 | DWG NAME: 27N43

4.41.5 Exposure Potential

This SAA is located within a restricted access industrial area which is not in close proximity to any residential areas or sensitive environments. If a release were to occur, the potential for exposure to contaminants would likely be limited to site workers.

4.41.6 Recommended Action

No further investigation of this SAA is recommended based on the information available and the lack of physical evidence that a release has occurred.

4.42 PAOC #39 — Satellite Accumulation Area, Building 35

4.42.1 Unit Characteristics

This SAA is an element of the Charleston Naval Shipyard hazardous waste management system. Hazardous wastes are accumulated at an SAA until 55-gallons of waste are accumulated [in accordance with 40 CFR 262.34(c)], then immediately transferred to a permitted hazardous waste storage facility prior to transport outside the Charleston Naval Complex for ultimate treatment or disposal. Figure 1-1 locates Building 35 within the Complex.

Wastes are stored in intermediate-sized containers (6-21 gallon capacities). The floor surface is floor tile overlying concrete. No containment berm exists. The SAA is approximately 3'x 4'. Figure 4-39 locates the SAA within Building 35.

PAOC #86, an adjacent SAA storing acetic, hydrochloric, and nitric acids, was recently consolidated with PAOC #39. See Section 4.89 for more information.

4.42.2 Waste Characteristics

The waste stream associated with this SAA includes spent aerosol cans, oily rags, and empty containers used for the storage of acetic, hydrochloric, and nitric acids.

4.42.3 Migration Pathways

Because this SAA is located inside Building 35, soil, groundwater, and surface waters are unlikely pathways. The floor in the vicinity of this SAA is free of cracks and it is highly unlikely the types of materials stored in this area would result in a release that would escape the building.

4.42.4 Evidence of Release

No incident reports, inspection reports, employee interviews, or physical evidence indicate that a release from this SAA has ever occurred.

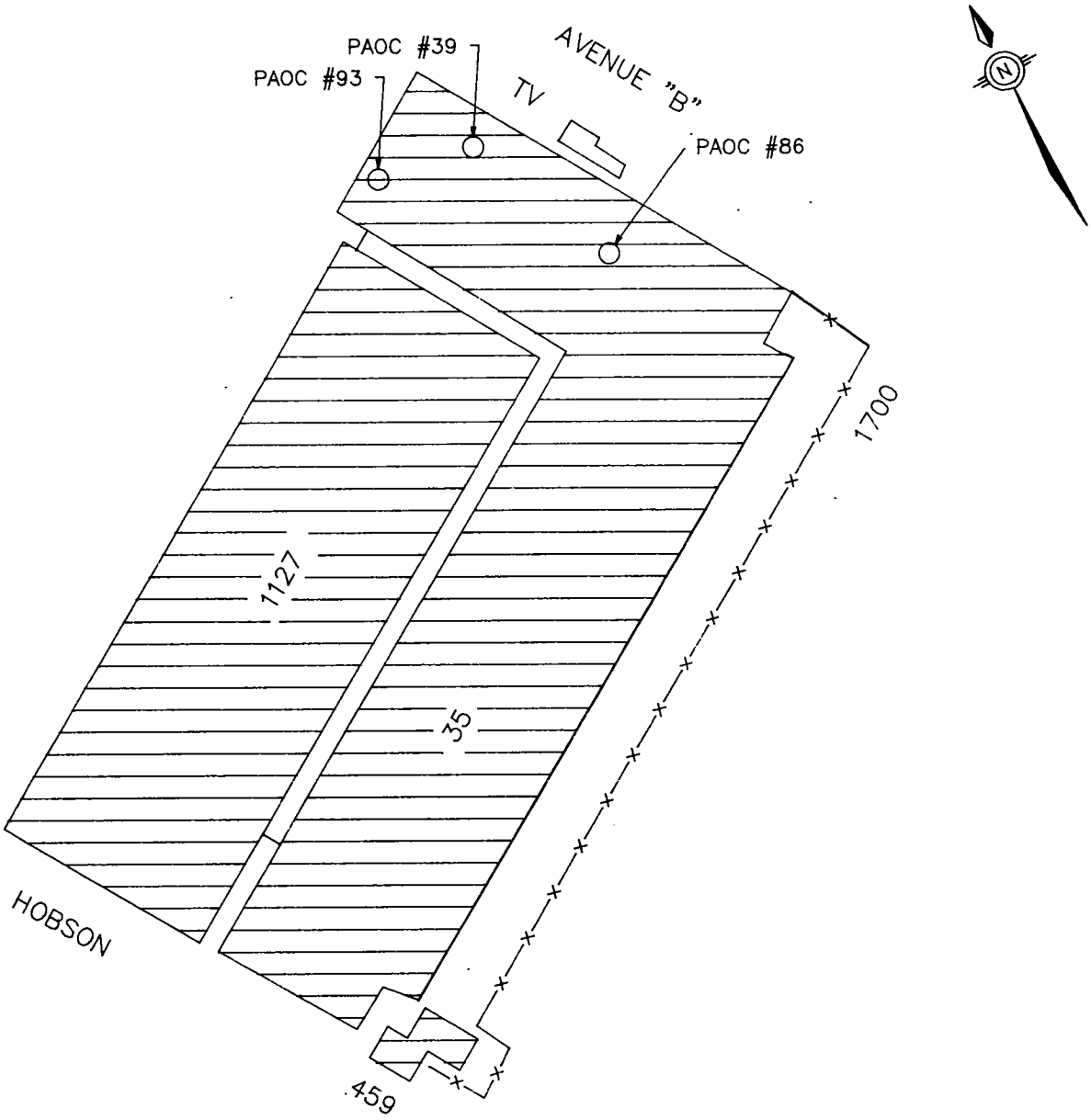

NOT TO SCALE

RCRA FACILITY
ASSESSMENT
NAVAL COMPLEX
CHARLESTON, S.C.

FIGURE 4-39
PAOC #39
BUILDING 35, SAA

DWG DATE: 02/16/94 | DWG NAME: 29AOC39

4.42.5 Exposure Potential

Due to the type of materials stored in this SAA and the location of the SAA, the potential for exposure is likely to be limited to site workers.

4.42.6 Recommended Action

No further investigation of this SAA is recommended due to the nature of the waste (i.e. empty containers and rags), storage practices, lack of evidence of a release, and the limited migration pathways.

4.43 PAOC #40 — Satellite Accumulation Area, Building 9

4.43.1 Unit Characteristics

This SAA is an element of the Naval Shipyard hazardous waste management system. Hazardous wastes are accumulated at an SAA until 55 gallons of waste are accumulated [in accordance with 40 CFR 262.34(c)], then immediately transferred to a permitted hazardous waste storage facility prior to transport outside the Charleston Naval Complex for ultimate treatment or disposal. Figure 1-1 locates Building 9 within the Complex. Figure 4-40 locates the SAA in relation to Building 9.

Wastes at this SAA are stored in closed 55-gallon drums and 5-gallon metal containers, all of which are underlain by concrete. The metal containers are also stored on shelves. The designated storage area is approximately 10'x 8'. On 1-31-94, PAOC #40 was clean. However, some fractures were observed in the concrete.

4.43.2 Waste Characteristics

The waste stream associated with this SAA includes but may not be limited to empty paint and aerosol cans, used paint brushes and rollers, used fuel and oil filters, and oil spill residue.

4.43.3 Migration pathways

Although this Even though some fractures were observed in the concrete floor in the vicinity of the SAA, the potential for a release to enter the underlying media is not likely based on the types of waste known to be managed in this area.

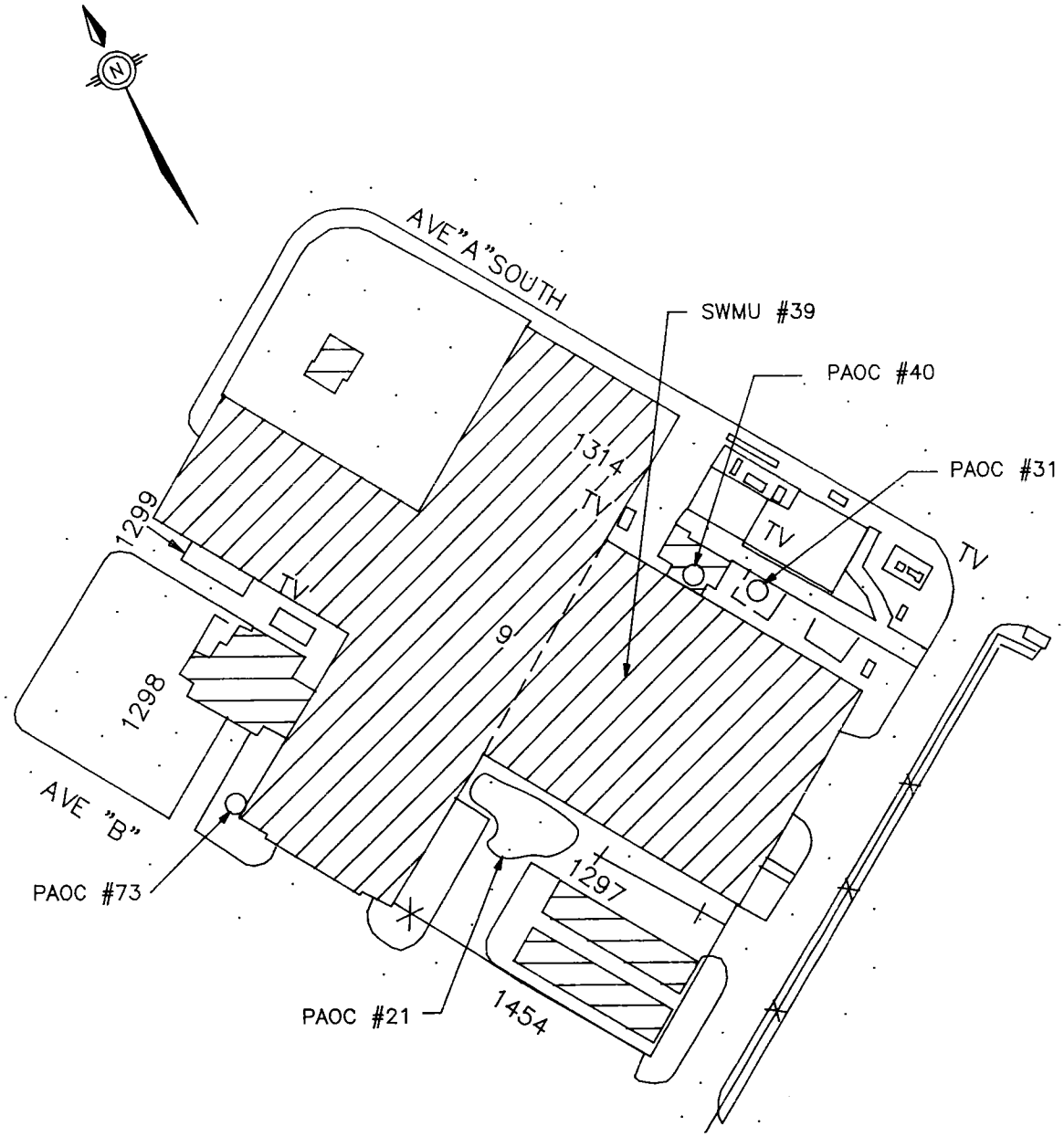

NOT TO SCALE

RCRA FACILITY
ASSESSMENT
NAVAL COMPLEX
CHARLESTON, S.C.

FIGURE 4-40
PAOC #40
BUILDING 9, SAA

DWG DATE: 02/16/94 | DWG NAME: 29AOC40

4.43.4 Evidence of Release

No incident reports, inspection reports, employee interviews, or physical evidence indicate that a release has ever occurred at this SAA.

4.43.5 Exposure Potential

This SAA is not in close proximity to any residential areas or sensitive environments. If a release were to occur, the risk of exposure would likely be limited to site workers.

4.43.6 Recommended Action

No further investigation of this SAA is recommended due to the nature of the waste (i.e. empty containers, brushes, filters, etc.), storage practices, lack of evidence of a release, and the limited migration pathways.

4.44 PAOC #41 — Less-than-90-day Accumulation Area, Building 2

4.44.1 Unit Characteristics

This less-than-90-day Accumulation Area (AA) is an element of the Naval Shipyard hazardous waste management system. Hazardous wastes are accumulated at an AA for less than 90 days, then transferred to a permitted hazardous waste storage facility prior to transport outside the Charleston Naval Complex for ultimate treatment or disposal. Figure 1-1 locates Building 2 within the Complex. Figure 4-41 locates the PAOC within Building 2.

Wastes at this AA are stored in 55-gallon drums, which are enclosed in a 12'x10' steel cage and underlain by a metal-lined drip pan. During the visual site inspection on February 1, 1994, PAOC #41 was in good condition. Four 55-gallon drums and one 55-gallon spill kit were observed. PAOC #41 is still operational.

4.44.2 Waste Characteristics

Aerosol cans, spray paint, empty adhesive tubes, hydraulic fluid containers, dye penetrate, oily rags, cutting oils/fluids, kerosene-contaminated rags, solvent developer, paint cans, and paint-contaminated debris are stored.

4.44.3 Migration Pathways

Because this AA is located inside Building 2, soil, groundwater, and surface water migration is unlikely. The floor in the vicinity of this AA is free of cracks. The likelihood of any liquid escaping the unit is remote.

4.44.4 Evidence of Release

No spill reports, inspection reports, employee interviews, or visual observations indicate spills at this AA.

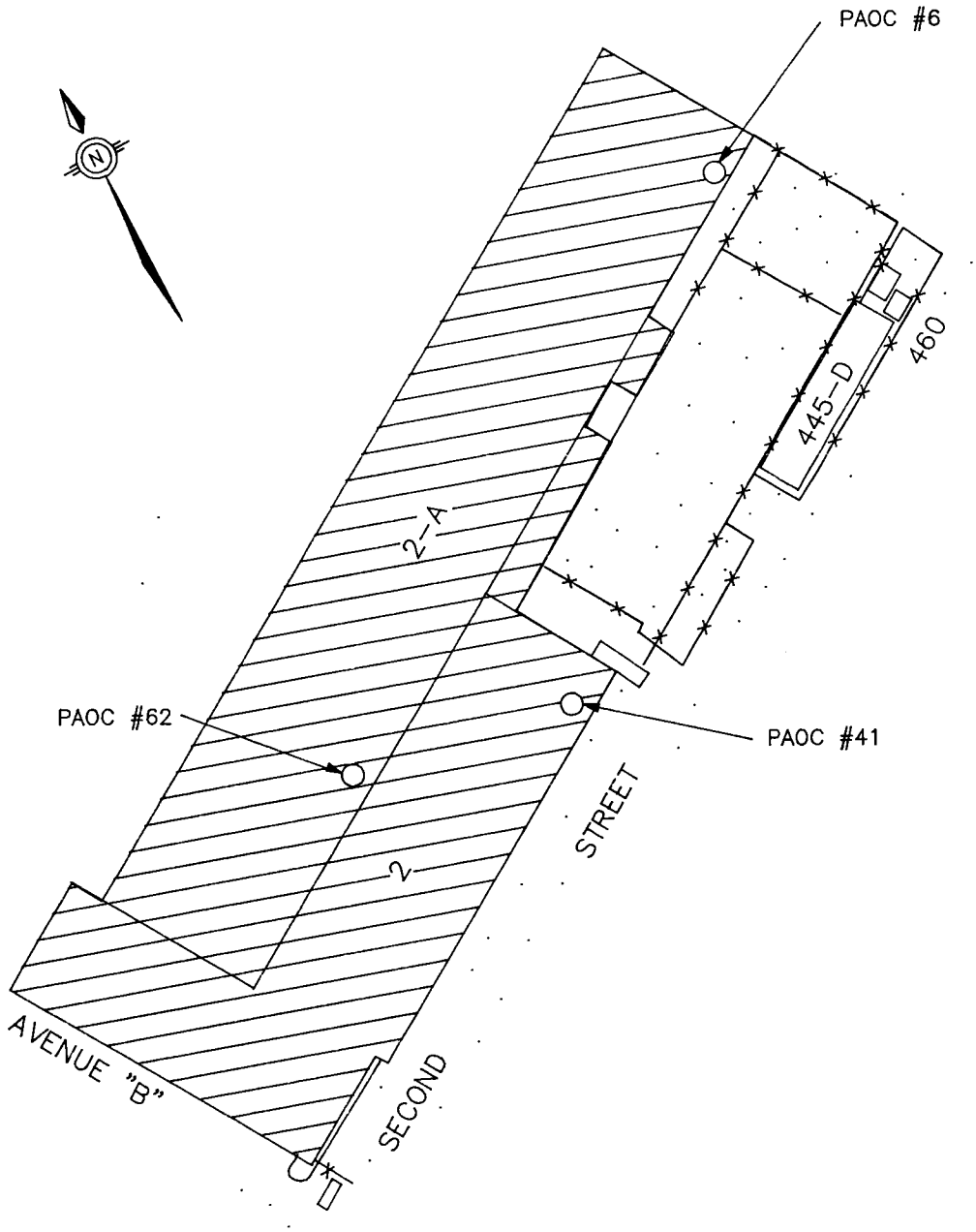

NOT TO SCALE

RCRA FACILITY
ASSESSMENT
NAVAL COMPLEX
CHARLESTON, S.C.

FIGURE 4-41
PAOC #41
BUILDING 2, <90 STORAGE AREA

DWG DATE: 02/16/94 | DWG NAME: 29AOC41

4.44.5 Exposure Potential

Building 2 is located approximately 500 feet from military housing and the Cooper River at Pier C. The design features of the unit and nature of waste (i.e. cans, tubes, rags) limit the potential exposures to Complex employees.

4.44.6 Recommended Action

No further investigation of this AA is recommended due to the nature of the waste, storage practices, lack of evidence of a release from this unit, and limited migration pathways.

4.45 PAOC #42 — Satellite Accumulation Area, Building 59A

4.45.1 Unit Characteristics

This SAA is an element of the Naval Shipyard hazardous waste management system. Hazardous wastes are accumulated at an SAA until 55 gallons of waste are accumulated [in accordance with 40 CFR 262.34(c)], then immediately transferred to a permitted hazardous waste storage facility prior to transport outside the Charleston Naval Complex for ultimate treatment or disposal. Figure 1-1 locates Building 59A within the Complex.

Wastes are stored in 55-gallon drums and 30-gallon containers. The floor surface is floor tile overlying concrete. No containment berm exists. The SAA is a 12'x 8' area. Figure 4-42 locates the SAA near Building 59A.

4.45.2 Waste characteristics

Empty paint and aerosol cans, empty metal and plastic containers, glue-contaminated debris, soiled rags, lubricants, glues, primers, insecticides, hand cleaners, sealing compounds, adhesives, and dry paint are stored. The major constituents of concern are volatile organic compounds, metals, and petroleum hydrocarbons.

4.45.3 Migration Pathways

This SAA is located outside of Building 59A; therefore, surface migration from surface runoff may occur. The floor in the vicinity of the SAA is free of cracks, protecting the underlying soil and groundwater.

4.45.4 Evidence of Release

No spill reports, inspection reports, employee interviews, or visual observations indicate spills at this SAA.

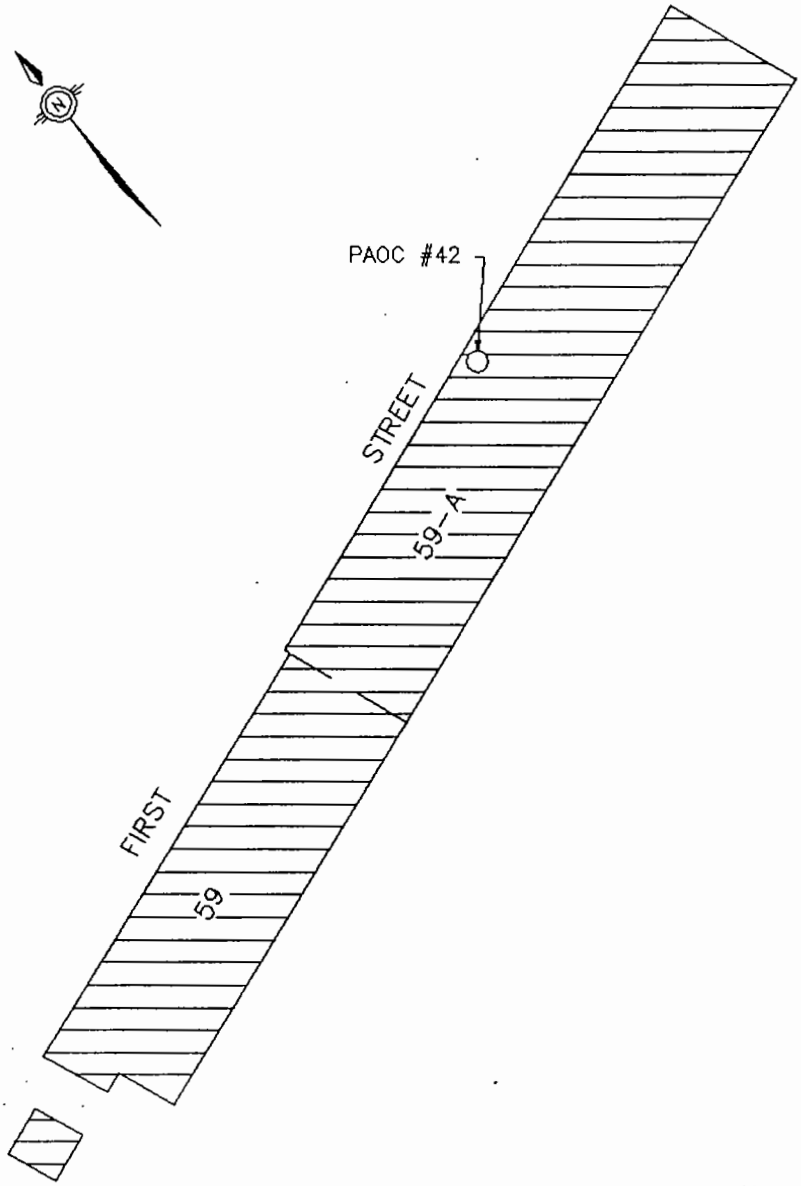

NOT TO SCALE

RCRA FACILITY
ASSESSMENT
NAVAL COMPLEX
CHARLESTON, S.C.

FIGURE 4-42
PAOC #42
BUILDING 59-A, SAA

DWG DATE: 02/10/94 | DWG NAME: 27N59

4.45.5 Exposure Potential

Building 59A is located approximately 300 feet from military housing and 600 feet from the Cooper River at Pier C. The design features of the unit and lack of evidence of a release minimize the likelihood of potential exposures to Complex employees.

4.45.6 Recommended Action

No further investigation of this SAA is recommended due to the nature of the waste (i.e. cans, rags), storage practices, lack of evidence of a release from this unit, and limited migration pathways.

4.46 PAOC #43 — Satellite Accumulation Area, Building FBM 61

4.46.1 Unit Characteristics

This SAA is an element of the Naval Shipyard hazardous waste management system. Hazardous wastes are accumulated at an SAA until 55 gallons of waste are accumulated [in accordance with 40 CFR 262.34(c)], then immediately transferred to a permitted hazardous waste storage facility prior to transport outside the Charleston Naval Complex for ultimate treatment or disposal. Figure 1-2 locates Building 61 within the Complex.

Wastes are stored in 5-gallon closed plastic containers, which are placed in a drip pan. The floor surface is floor tile overlying concrete. No containment berm exists. Figure 4-43 locates the SAA within Building FBM 61.

4.46.2 Waste characteristics

Mercuric nitrate is stored.

4.46.3 Migration Pathways

Because this SAA is located inside Building FBM 61, soil, groundwater, and surface waters are unlikely pathways. The floor in the vicinity of this SAA is free of cracks.

4.46.4 Evidence of Release

No spill reports, inspection reports, employee interviews, or visual observations indicate spills at this SAA.

4.46.5 Exposure Potential

This SAA is not in close proximity to any residential areas or sensitive environments. The Cooper River is approximately 2100 feet from Building FBM 61. The design features of the unit and lack of evidence of spills minimize the potential exposures to Complex employees.

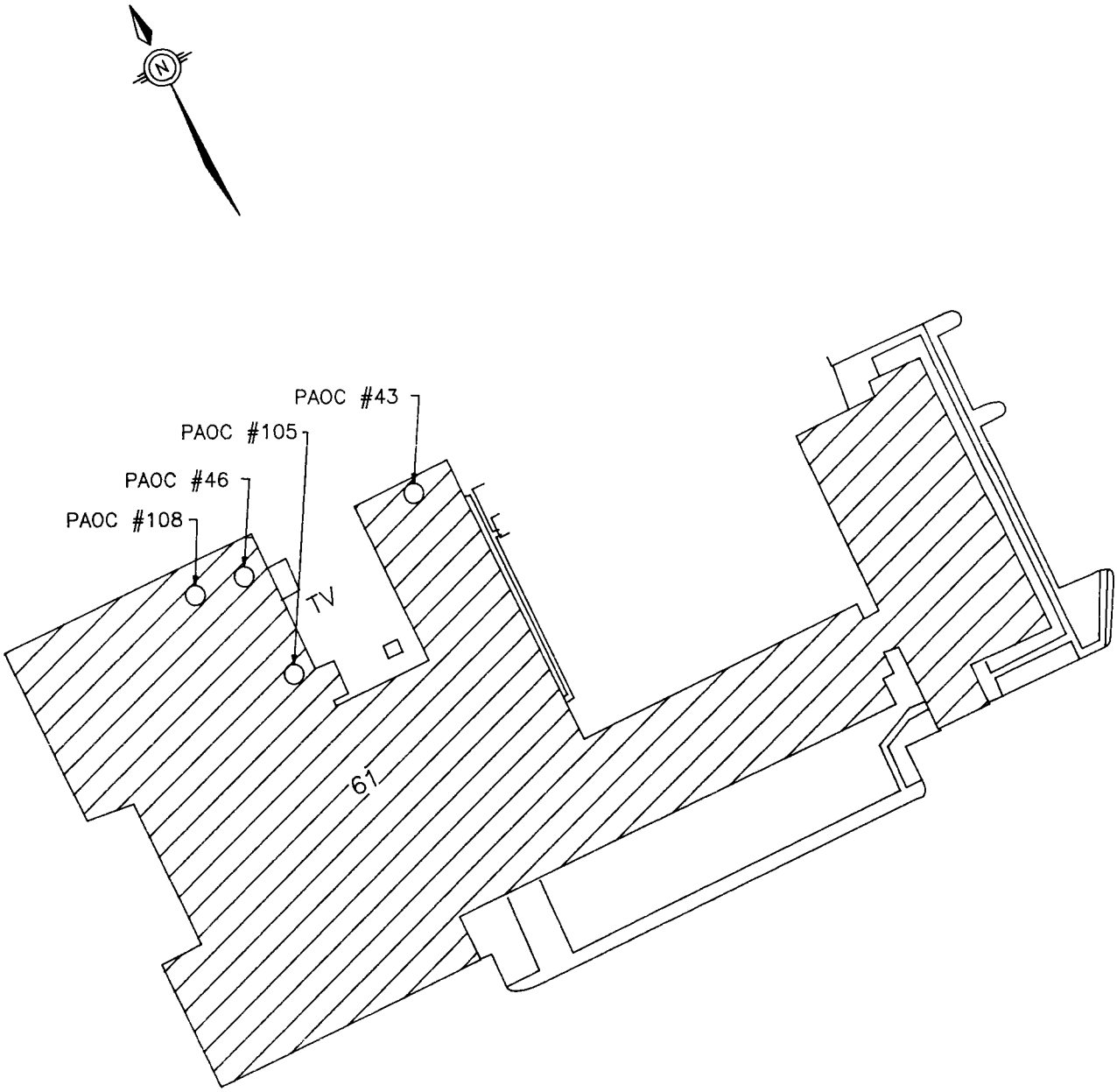

NOT TO SCALE

RCRA FACILITY
ASSESSMENT
NAVAL COMPLEX
CHARLESTON, S.C.

FIGURE 4-43
PAOC #43
BUILDING 61, SAA

DWG DATE: 02/16/94 | DWG NAME: 29AOC43

4.46.6 Recommended Action

No further investigation of this SAA is recommended due to the storage practices, lack of evidence of a release from this unit, and limited migration pathways.

4.47 PAOC #44 — Satellite Accumulation Area, Building 56

4.47.1 Unit Characteristics

This SAA is an element of the Naval Shipyard hazardous waste management system. Hazardous wastes are accumulated at an SAA until 55 gallons of waste are accumulated [in accordance with 40 CFR 262.34(c)], then immediately transferred to a permitted hazardous waste storage facility prior to transport outside the Charleston Naval Complex for ultimate treatment or disposal. Figure 1-1 locates Building 56 within the Complex.

Wastes are stored in closed 55-gallon drums and other steel containers in a 12'x 8' steel shed with a concrete floor. No containment berm exists. Figure 4-44 locates the SAA near Building 56.

4.47.2 Waste Characteristics

Empty paint cans and paint-contaminated debris are stored at this SAA. The major constituents of concern are volatile organic compounds and metals.

4.47.3 Migration Pathways

This SAA is located outside of Building 56; therefore, surface migration from surface runoff may occur. The floor in the vicinity of the SAA is free of cracks, protecting the underlying soil and groundwater.

4.47.4 Evidence of Release

No spill reports, inspection reports, employee interviews, or visual observations indicate spills at this SAA.

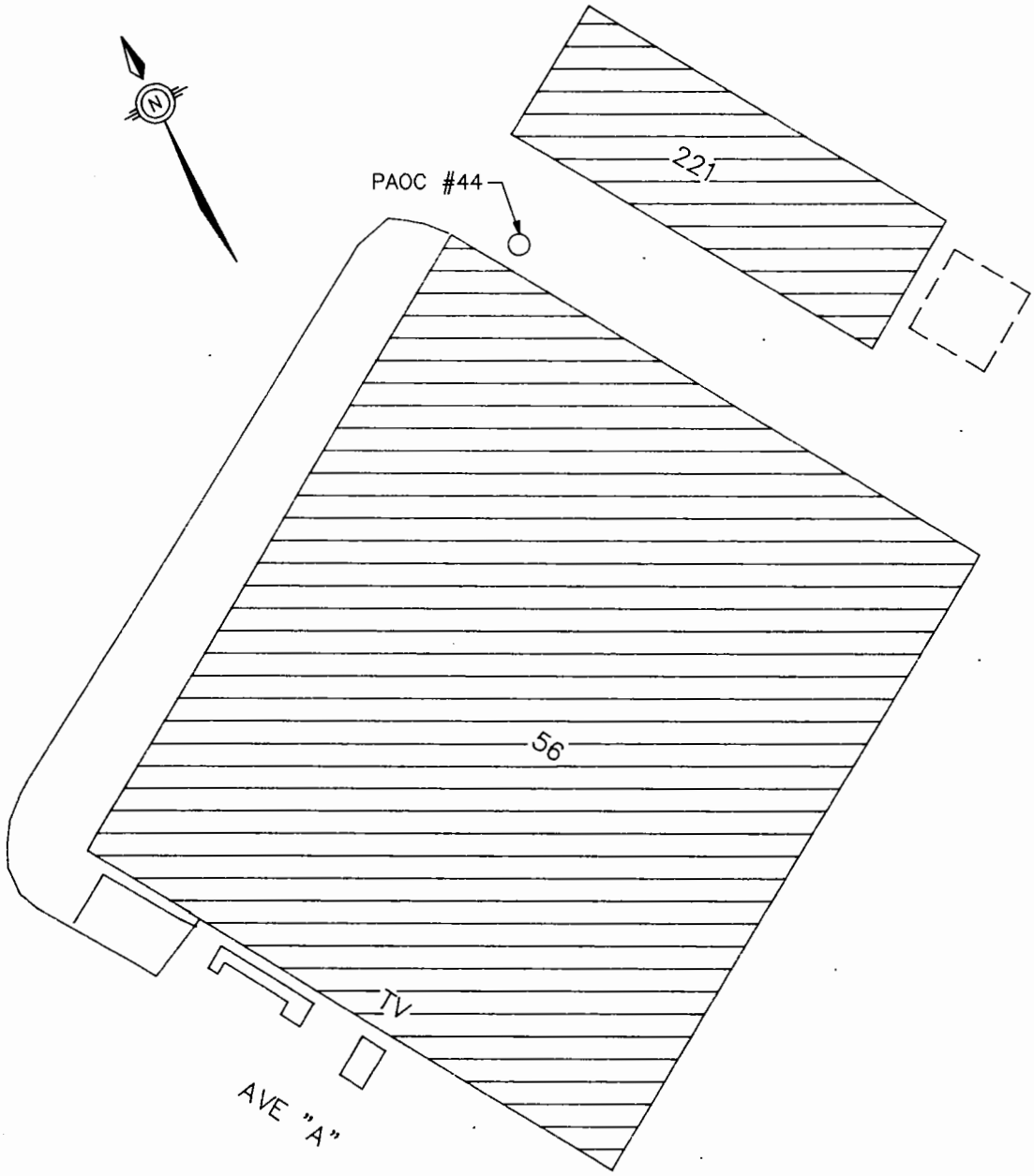

NOT TO SCALE

RCRA FACILITY
ASSESSMENT
NAVAL COMPLEX
CHARLESTON, S.C.

FIGURE 4-44
PAOC #44
BUILDING 56, SAA

DWG DATE: 02/16/94 | DWG NAME: 29AOC44

4.47.5 Exposure Potential

Building 56 is approximately 800 feet from military housing, and is adjacent to Pier C. The design features of the unit, nature of waste (i.e. cans, debris), and lack of evidence of a release minimize the likelihood of potential exposures to Complex employees.

4.47.6 Recommended Action

No further investigation of this SAA is recommended due to the nature of the waste, storage practices, lack of evidence of a release from this unit, and limited migration pathways.

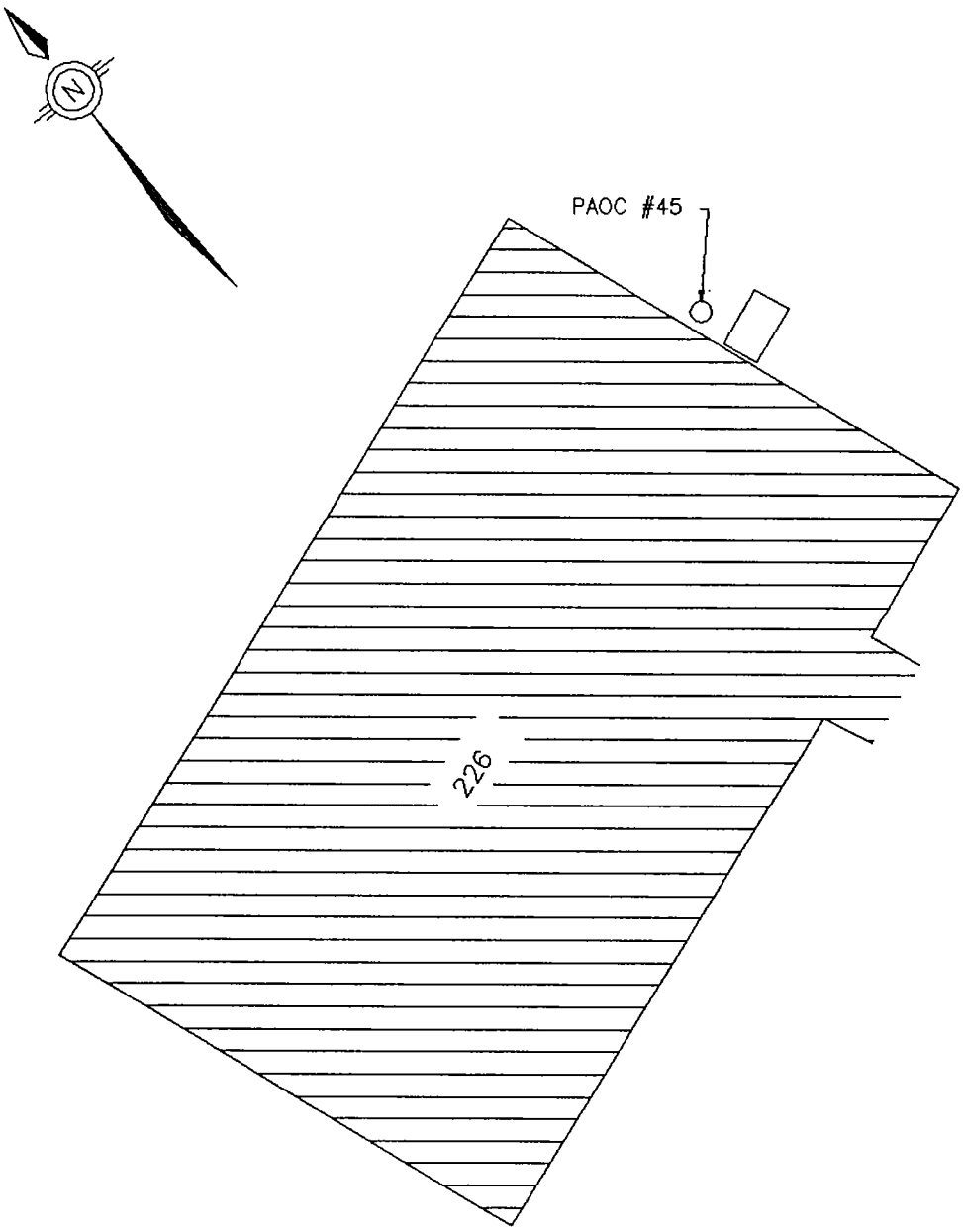

NOT TO SCALE

RCRA FACILITY
ASSESSMENT
NAVAL COMPLEX
CHARLESTON, S.C.

FIGURE 4-45
PAOC #45
BUILDING 226, STORAGE AREA

DWG DATE: 02/10/94 | DWG NAME: 27N226

4.48.5 Exposure Potential

Building 226 is approximately 800 feet from military housing and 500 feet from the Cooper River at Pier C. The design features of the unit and lack of evidence of a release minimize the likelihood of potential exposures to Complex employees.

4.48.6 Recommended Action

No further investigation of this SAA is recommended due to the storage practices, lack of evidence of a release from this unit, and limited migration pathways.

4.49 PAOC #46 — Satellite Accumulation Area, Building FBM 61

4.49.1 Unit Characteristics

This SAA is an element of the Charleston Naval Shipyard hazardous waste management system. Hazardous wastes are accumulated at an SAA until 55 gallons of waste are accumulated [in accordance with 40 CFR 262.34(c)], then immediately transferred to a permitted hazardous waste storage facility prior to transport outside the Charleston Naval Complex for ultimate treatment or disposal. Figure 1-2 locates Building 61 within the Complex.

Wastes are stored in 5-gallon closed plastic containers, which are placed in a drip pan. The floor surface is floor tile overlying concrete. No containment berm exists. Figure 4-46 locates the SAA within Building FBM 61.

4.49.2 Waste Characteristics

Borate cupric sulfate solution, waste oil, and oily rags are stored.

4.49.3 Migration Pathways

Because this SAA is located inside Building FBM 61, soil, groundwater, and surface waters are unlikely pathways. The floor in the vicinity of this SAA is free of cracks.

4.49.4 Evidence of Release

No spill reports, inspection reports, employee interviews, or visual observations indicate spills at this SAA.

4.49.5 Exposure Potential

Building FBM 61 is not close to residential areas. The Cooper River is approximately 2100 feet from Building FBM 61. The design features of the unit and lack of evidence of a spill minimizes the likelihood of potential exposures to Complex employees.

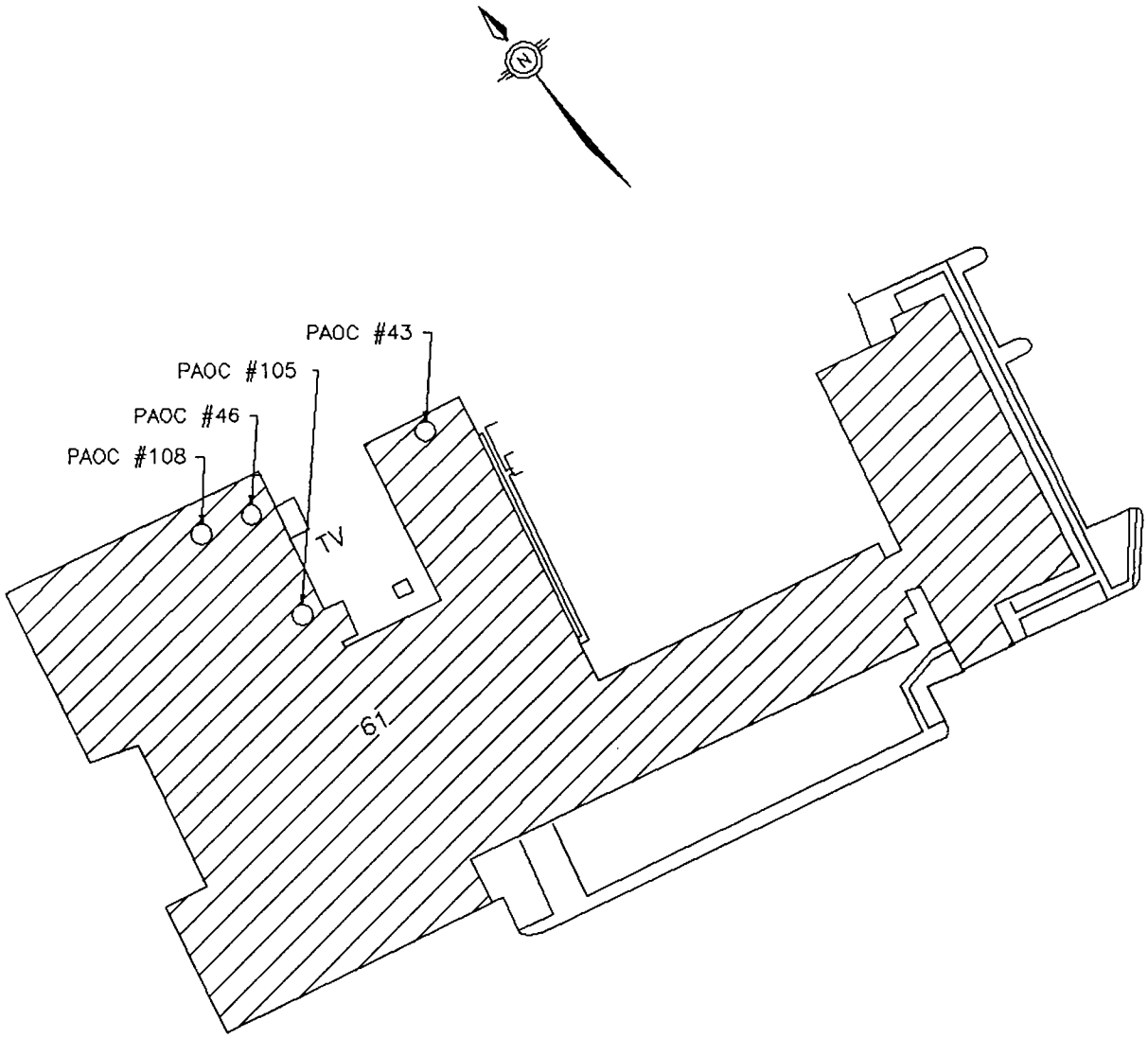

NOT TO SCALE

RCRA FACILITY
ASSESSMENT
NAVAL COMPLEX
CHARLESTON, S.C.

FIGURE 4-46
PAOC #46
BUILDING 61, SAA

DWG DATE: 02/10/94 | DWG NAME: 27S61

4.49.6 Recommended Action

No further investigation of this SAA is recommended due to the storage practices, lack of evidence of a release from this unit, and limited migration pathways.

4.50 PAOC #47 — Satellite Accumulation Area, Building 13

4.50.1 Unit Characteristics

This SAA is an element of the Naval Shipyard hazardous waste management system. Hazardous wastes are accumulated at an SAA until 55 gallons of waste are accumulated [in accordance with 40CFR 262.34(c)], then immediately transferred to a permitted hazardous waste storage facility prior to transport outside the Charleston Naval Complex for ultimate treatment or disposal. Figure 1-1 locates Building 13 within the Complex. Figure 4-47 locates the PAOC within Building 13.

PAOC #47 is an active SAA consisting of three plastic storage containers in the north corner of Building 13. The containers are used to collect wastes from the laboratory's atomic absorption instruments. The floor surface of the 3'x 4' area is floor tile over concrete.

4.50.2 Waste Characteristics

Wastes stored at this SAA consist of dilute acids containing traces of various metals, used Freon 133 and residues from samples.

4.50.3 Migration Pathways

The SAA is located inside Building 13; therefore, migration from surface runoff is unlikely. The floor in the vicinity of the unit is free of cracks, protecting the underlying soil and groundwater. Should a spill occur, the small quantity stored in any container would not likely escape the building.

4.50.4 Evidence of Release

No spill reports, inspection reports, employee interviews, or visual observations indicate spills at this SAA.

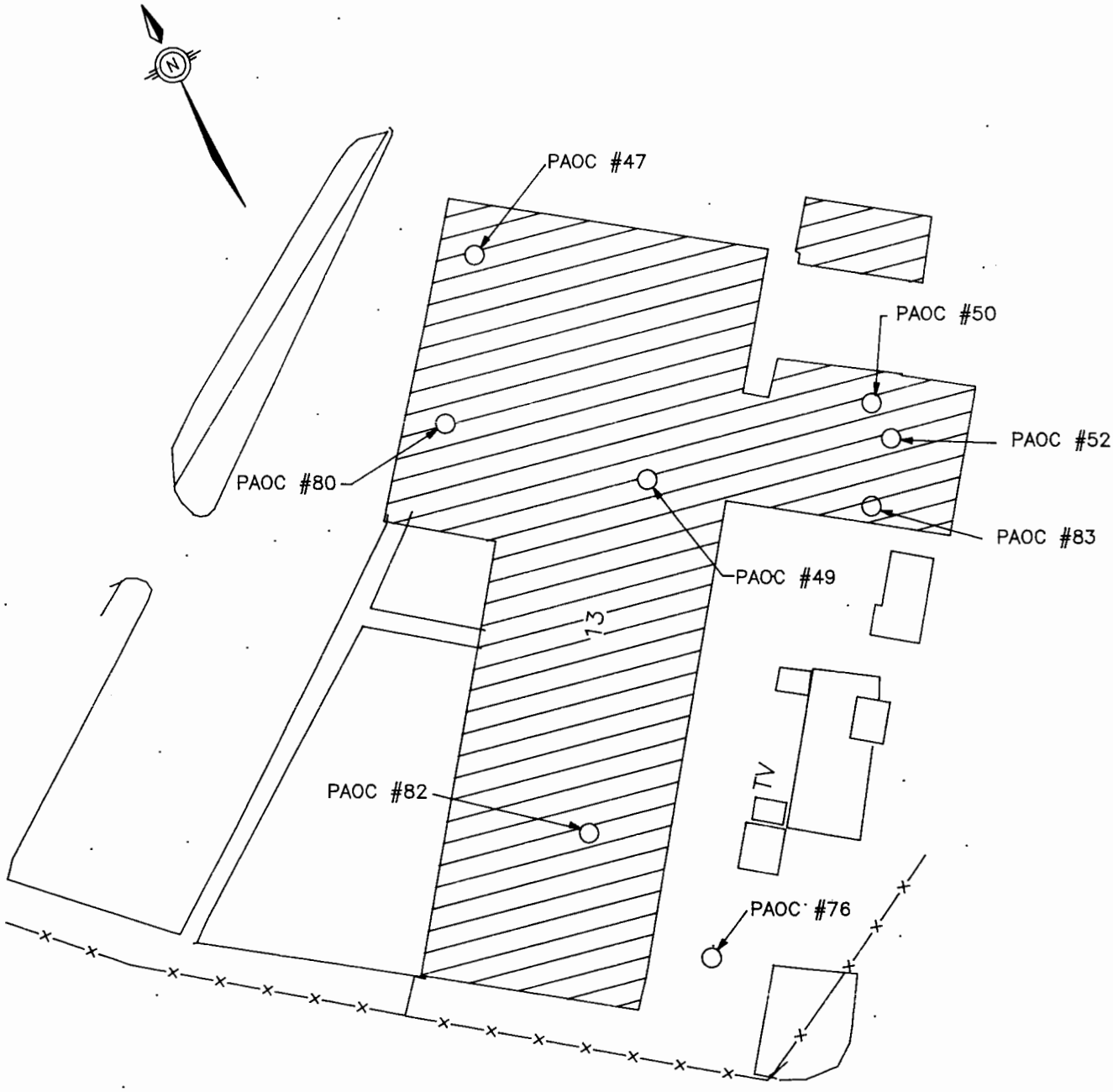

NOT TO SCALE

RCRA FACILITY
ASSESSMENT
NAVAL COMPLEX
CHARLESTON, S.C.

FIGURE 4-47
PAOC #47
BUILDING 13, SAA

DWG DATE: 02/16/94 | DWG NAME: 29AOC47

4.50.5 Exposure Potential

Building 13 is not close to residential areas. The unit is located inside a building within the boundaries of a restricted access industrial area, limiting exposure to Charleston Naval Complex workers. Building 13 is approximately 400 feet from the Cooper River at drydock 5. The potential risk of impact on the Cooper River from a release at this SAA is expected to be minimal.

4.50.6 Recommended Action

No further investigation of this SAA is recommended due to the storage practices, lack of evidence of a release from this unit, and limited migration pathways.

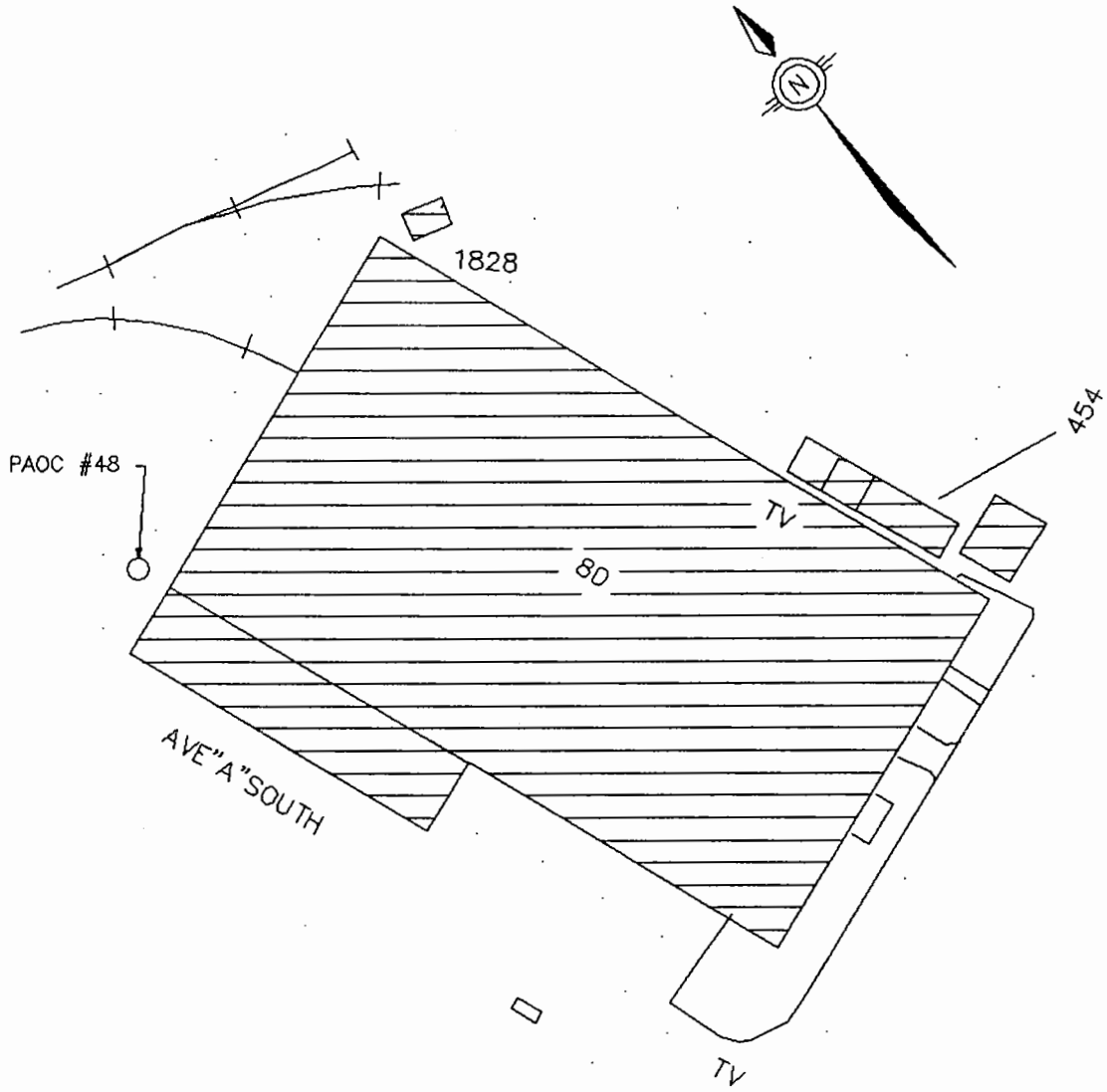

NOT TO SCALE

RCRA FACILITY
ASSESSMENT
NAVAL COMPLEX
CHARLESTON, S.C.

FIGURE 4-48
PAOC #48
BUILDING 80, <90 STORAGE AREA

DWG DATE: 02/10/94 | DWG NAME: 27N80

4.51.5 Exposure Potential

Building 80 is not close to any residential areas, and is approximately 300 feet from the Cooper River at drydocks 2 and 5. The design features of the unit limits potential exposures to Complex employees.

4.51.6 Recommended Action

No further investigation of this AA is recommended due to the storage practices, lack of evidence of a release from this unit, and limited migration pathways.

4.52 PAOC #49 — Satellite Accumulation Area, Building 13

4.52.1 Unit Characteristics

This SAA is an element of the Naval Shipyard hazardous waste management system. Hazardous wastes are accumulated at an SAA until 55 gallons of waste are accumulated [in accordance with 40 CFR 262.34(c)], then immediately transferred to a permitted hazardous waste storage facility prior to transport outside the Charleston Naval Complex for ultimate treatment or disposal. Figure 1-1 locates Building 13 within the Complex. Figure 4-49 locates the SAA within Building 13.

Wastes are stored in 5-gallon containers on a counter top in the laboratory. Waste stores at this SAA is generated during the analysis of petroleum hydrocarbon samples. The floor surface is floor tile over concrete.

4.52.2 Waste Characteristics

Waste oil, titration solvents, and naphtha are stored.

4.52.3 Migration Pathways

This SAA is located inside Building 13; therefore, migration from surface runoff is unlikely. The floor in the vicinity of the unit is free of cracks, protecting the underlying soil and groundwater. Should a spill occur, the small quantity stored in any container would not likely escape the building.

4.52.4 Evidence of Release

No spill reports, inspection reports, employee interviews, or visual observations indicate spills at this SAA.

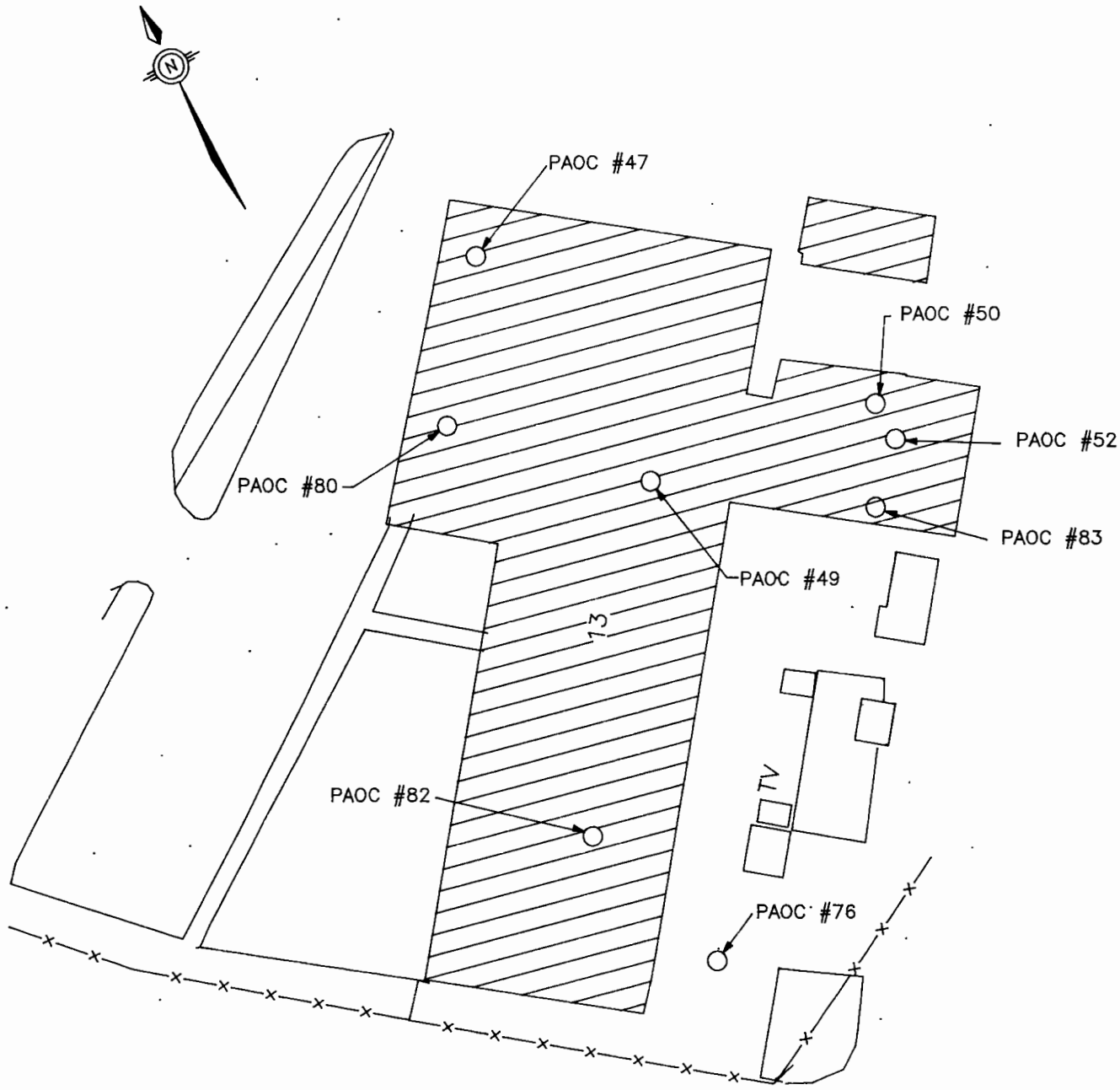

NOT TO SCALE

RCRA FACILITY
ASSESSMENT
NAVAL COMPLEX
CHARLESTON, S.C.

FIGURE 4-49
PAOC #49
BUILDING 13, SAA

DWG DATE: 02/16/94 | DWG NAME: 29AOC49

4.52.5 Exposure Potential

Building 13 is not close to residential areas. The unit is located inside a building within the boundaries of a restricted access industrial area, limiting exposure to Complex workers. Building 13 is located approximately 400 feet from the Cooper River at drydock 5, which represents a sensitive environment. The potential risk of impact on the Cooper River from a release at this SAA is expected to be minimal.

4.52.6 Recommended Action

No further investigation of this SAA is recommended due to the storage practices, lack of evidence of a release from this unit, and limited migration pathways.

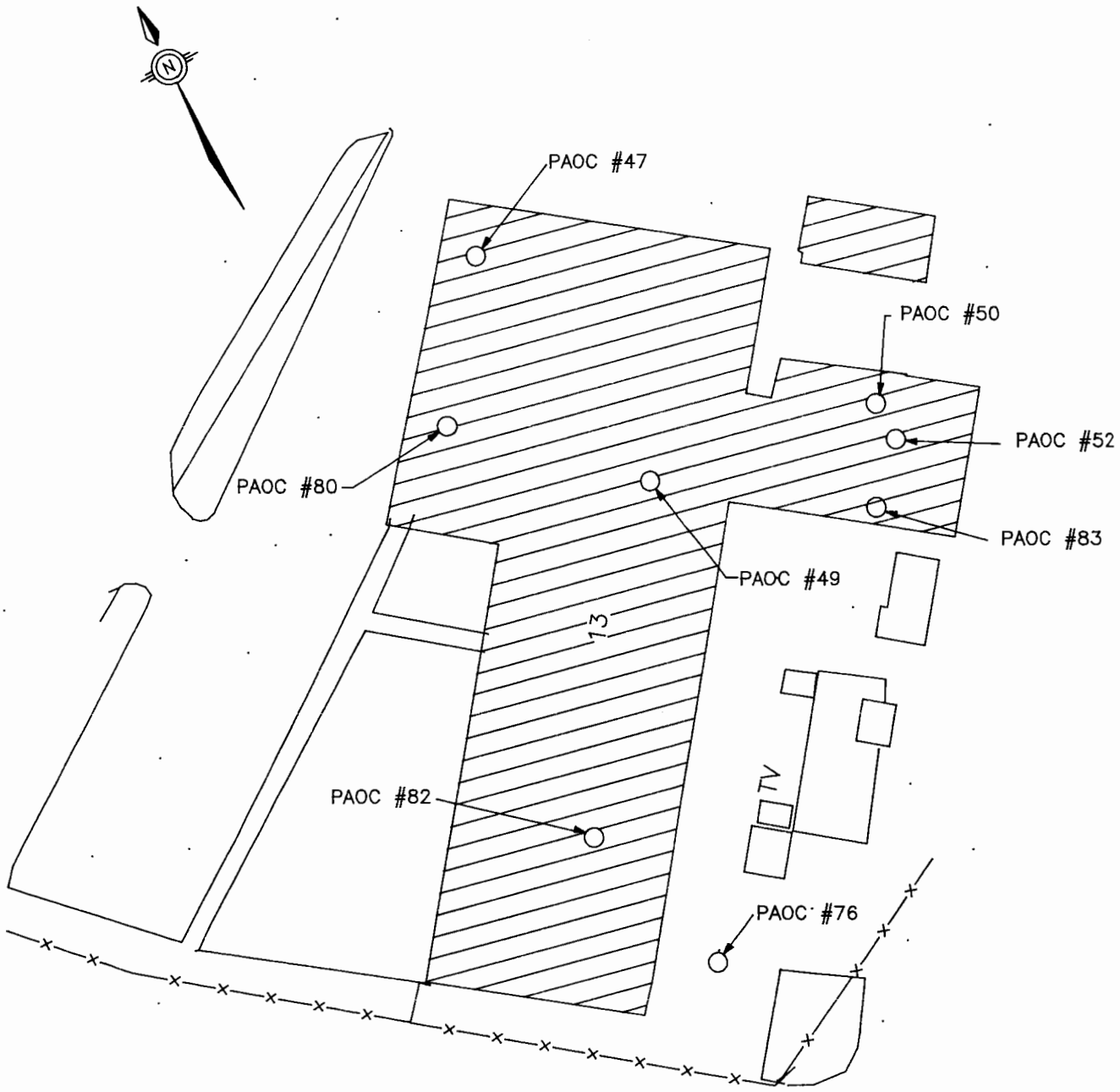

NOT TO SCALE

RCRA FACILITY
ASSESSMENT
NAVAL COMPLEX
CHARLESTON, S.C.

FIGURE 4-50
PAOC #50
BUILDING 13, SAA

DWG DATE: 02/16/94 | DWG NAME: 29AOC50

4.53.5 Exposure Potential

Building 13 is not close to residential areas. The unit is located inside a building within the boundaries of a restricted access industrial area, limiting potential exposures to Complex employees. Building 13 is approximately 400 feet from the Cooper River at drydock 5.

4.53.6 Recommended Action

No further investigation of this SAA is recommended due to the storage practices, lack of evidence of a release from this unit, and limited migration pathways.

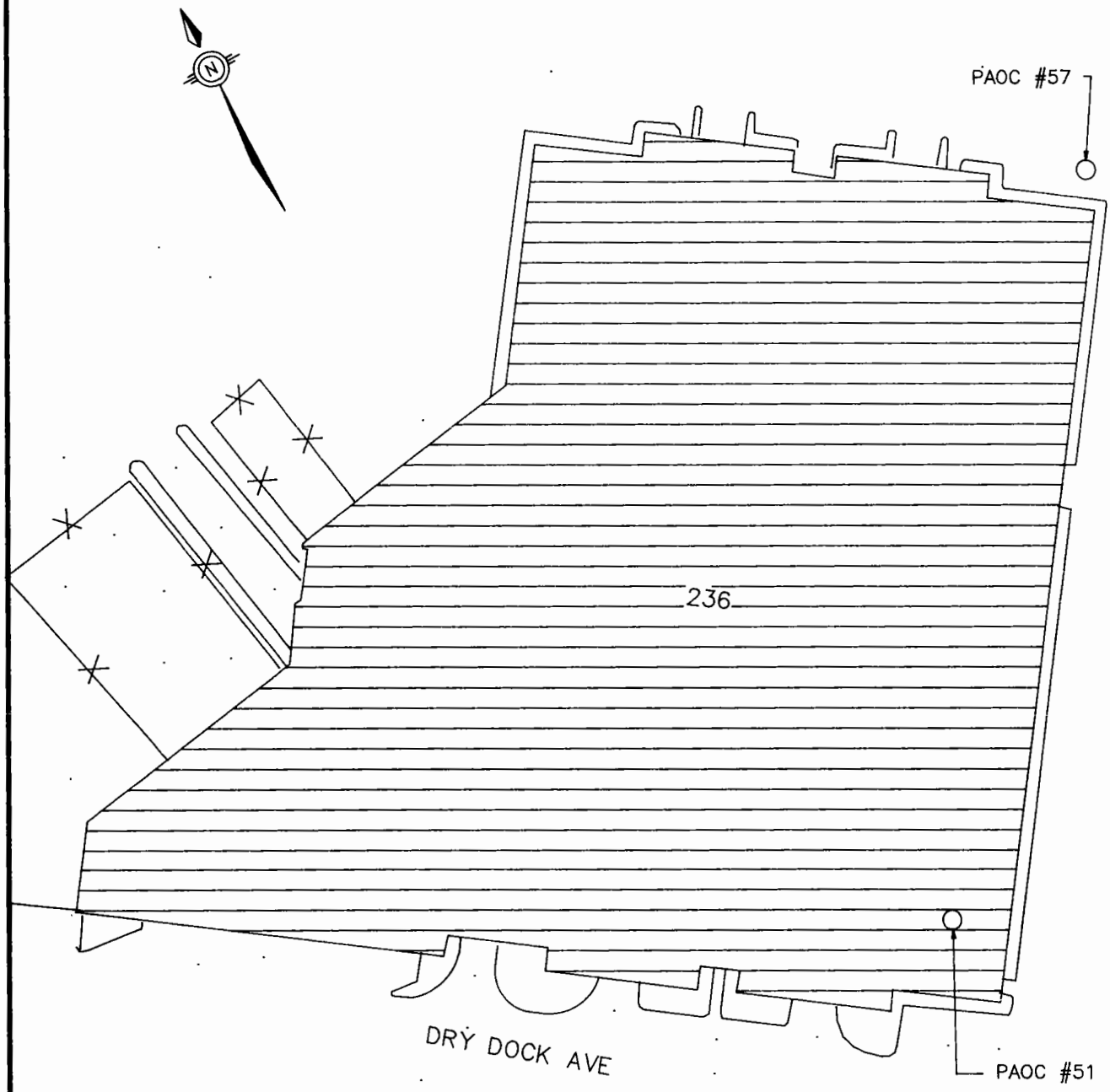

NOT TO SCALE

RCRA FACILITY
ASSESSMENT
NAVAL COMPLEX
CHARLESTON, S.C.

FIGURE 4-51
PAOC #51
BUILDING 236, <90 STORAGE AREA

DWG DATE: 02/16/94 | DWG NAME: 29AOC51

4.54.5 Exposure Potential

The location of the unit within an industrial building, more than 500 yards from both the Charleston Naval Complex boundary and the Cooper River, limits potential exposures to Naval Complex workers.

4.54.6 Recommended Action

No further investigation of this AA is recommended due to the storage practices, lack of evidence of a release from this unit, and limited migration pathways.

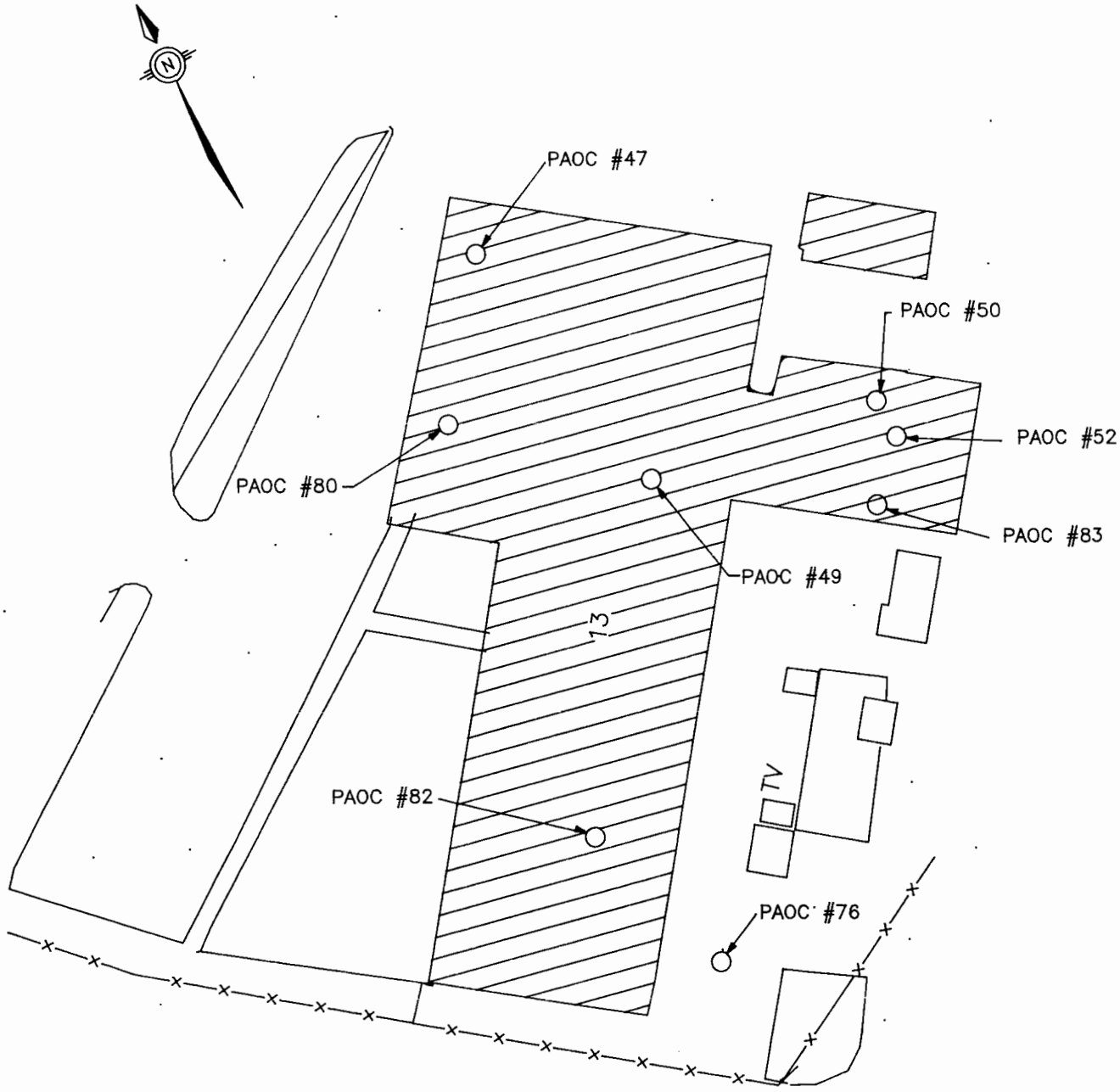

NOT TO SCALE

RCRA FACILITY
ASSESSMENT
NAVAL COMPLEX
CHARLESTON, S.C.

FIGURE 4-52
PAOC #52
BUILDING 13, SAA

DWG DATE: 02/16/94 | DWG NAME: 29AOC52

4.55.5 Exposure Potential

The unit is in a building within the boundaries of a restricted access industrial area, limiting exposure to Charleston Naval Complex workers. The closest sensitive environment to Building 13 is the Cooper River, approximately 500 feet away. Any potential impact to the Cooper River by a release from this SAA is expected to be minimal.

4.55.6 Recommended Action

No further investigation of this SAA is recommended due to storage practices, lack of evidence of a release, and limited migration pathways.

4.56 PAOC #53 — Satellite Accumulation Area, Building 202

4.56.1 Unit Characteristics

This SAA is an element of the Naval Shipyard hazardous waste management system. Hazardous wastes are accumulated at an SAA until 55 gallons of waste are accumulated [in accordance with 40 CFR 262.34(c)], then immediately transferred to a permitted hazardous waste storage facility prior to transport outside the Charleston Naval Complex for ultimate treatment or disposal. Figure 1-2 locates Building 202 within the Complex. Figure 4-53 locates the PAOC within Building 202.

Wastes at this SAA are stored in 5-gallon closed plastic containers within a drip pan underlain by a concrete floor. During a visual site inspection on January 26, 1994, PAOC #53 was clean and in good condition.

4.56.2 Waste Characteristics

An unknown volume of mercuric nitrate waste is stored at this satellite accumulation area.

4.56.3 Migration Pathways

Because this SAA is located inside Building 202, soil, groundwater, and surface water migration is unlikely. The concrete floor in the vicinity of this SAA is free of cracks, thus reducing subsurface migration potential.

4.56.4 Evidence of Release

No spill reports, inspection reports, employee interviews, or visual observations indicate spills at this SAA.

4.56.5 Exposure Potential

This SAA is not close to any residential areas or sensitive environments. The limited storage capacity and nature of waste limit the potential exposures to Naval Complex employees.

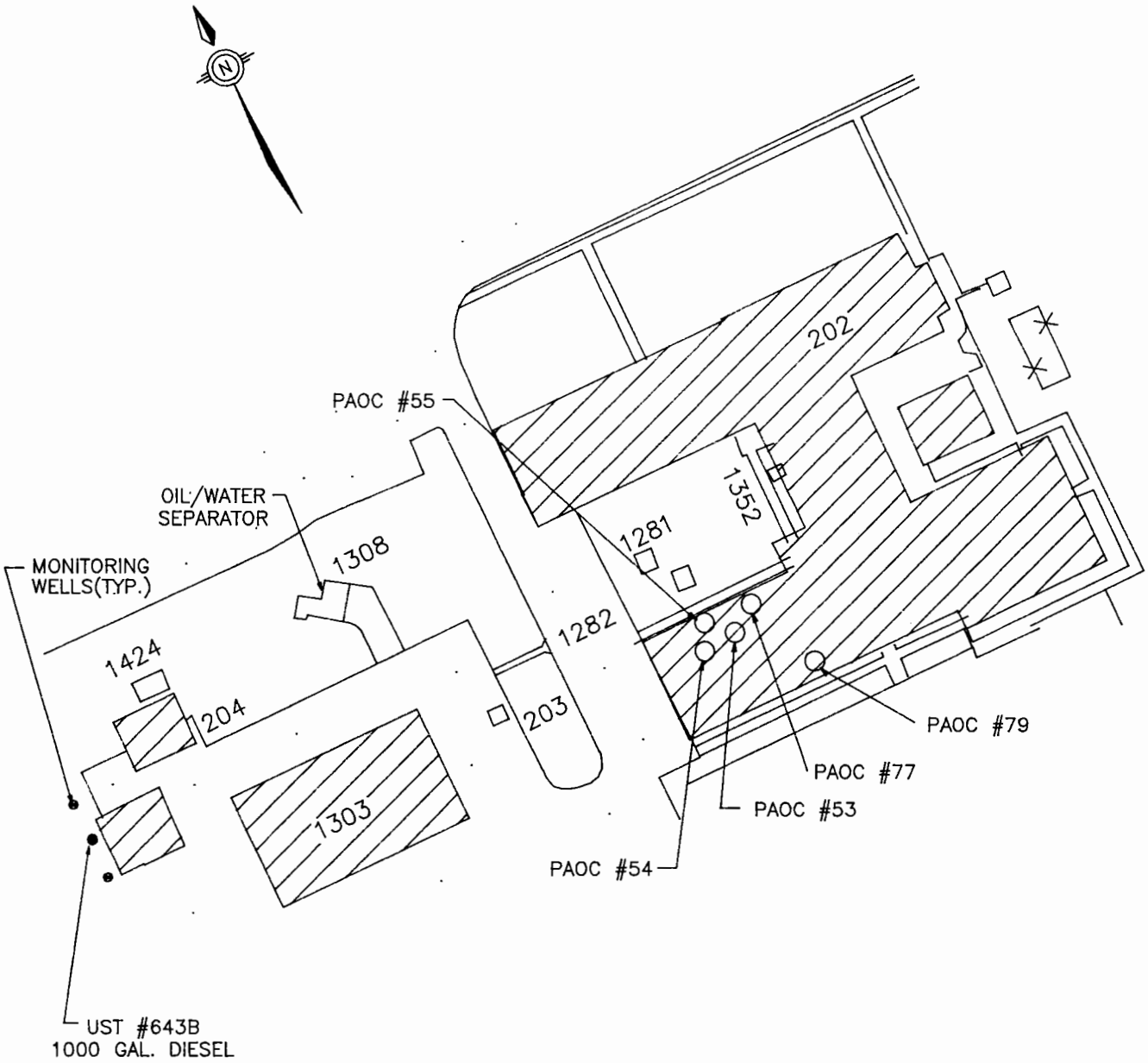

NOT TO SCALE

RCRA FACILITY
ASSESSMENT
NAVAL COMPLEX
CHARLESTON, S.C.

FIGURE 4-53
PAOC #53
BUILDING 202, SAA

DWG DATE: 02/16/94 | DWG NAME: 29AOC53

4.56.6 Recommended Action

No further investigation of this SAA is recommended due to the design features of this unit, lack of evidence of a release, and limited migration pathways.

4.57 PAOC #54 — Satellite Accumulation Area, Building 202

4.57.1 Unit Characteristics

This SAA is an element of the Naval Shipyard hazardous waste management system. Hazardous wastes are accumulated at an SAA until 55 gallons of waste are accumulated [in accordance with 40 CFR 262.34(c)], then immediately transferred to a permitted hazardous waste storage facility prior to transport outside the Charleston Naval Complex for ultimate treatment or disposal. Figure 1-2 locates Building 202 within the Complex. Figure 4-54 locates the PAOC within Building 202.

Wastes at this satellite accumulation area are stored in 5-gallon closed plastic containers. The plastic containers are placed in a drip pan, which is underlain by concrete. During a visual site inspection on January 26, 1994, PAOC #54 was clean and in good condition.

4.57.2 Waste characteristics

An unknown volume of mercuric nitrate waste is stored at this SAA.

4.57.3 Migration Pathways

Because this SAA is located inside Building 202, soil, groundwater, and surface water migration is unlikely. The concrete floor surrounding the unit was free of cracks, protecting the underlying soil and groundwater.

4.57.4 Evidence of Release

No spill reports, inspection reports, employee interviews, or visual observations indicate spills at this SAA.

4.57.5 Exposure Potential

This PAOC is not close to any residential areas or sensitive environments. The limited storage capacity limits the potential exposures to Naval Complex employees.

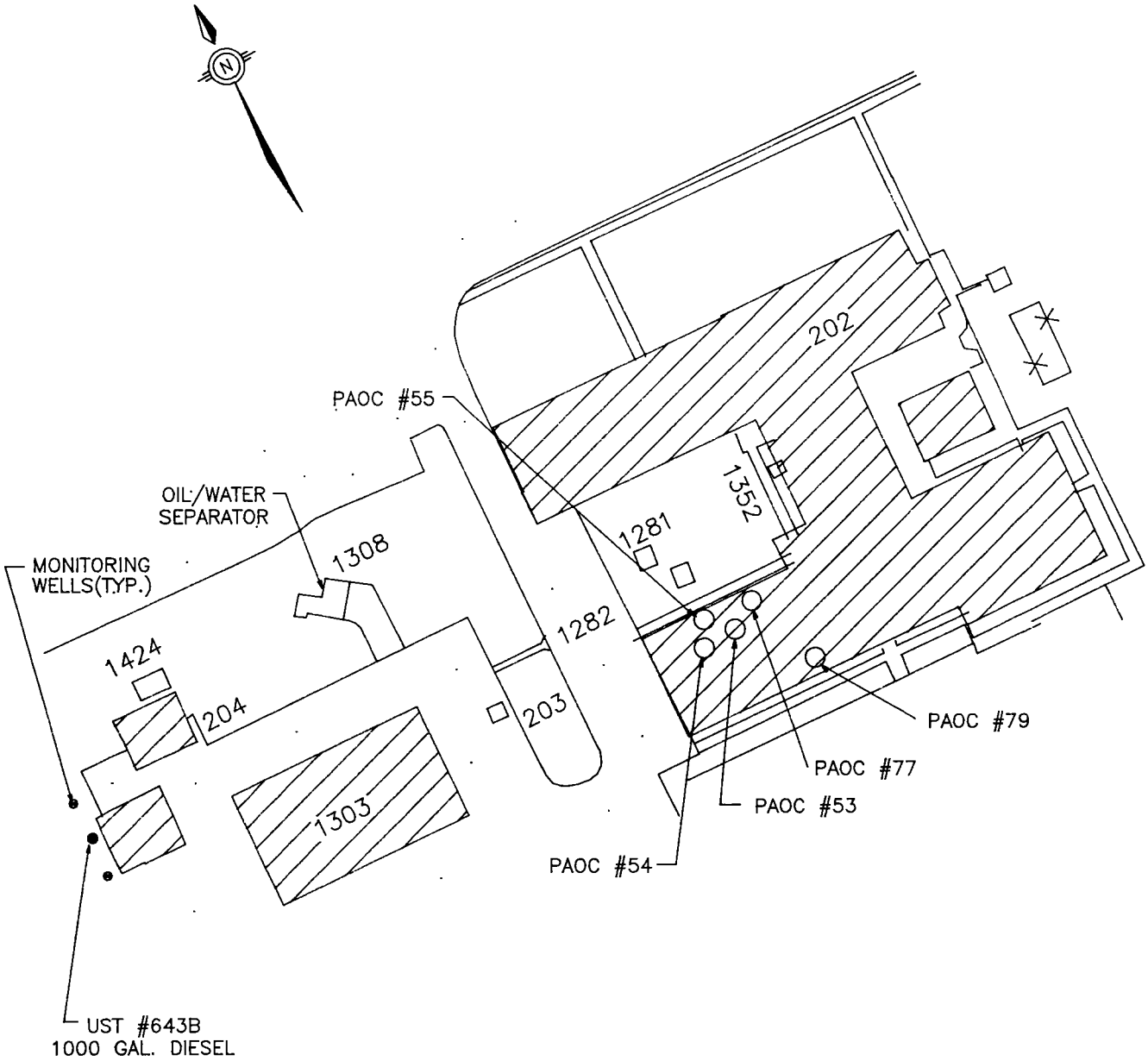

NOT TO SCALE

RCRA FACILITY
ASSESSMENT
NAVAL COMPLEX
CHARLESTON, S.C.

FIGURE 4-54
PAOC #54
BUILDING 202, SAA

DWG DATE: 02/16/94 | DWG NAME: 29AOC54

4.57.6 Recommended Action

No further investigation of this SAA is recommended due to the storage practices, lack of evidence of a release from this unit, and limited migration pathways.

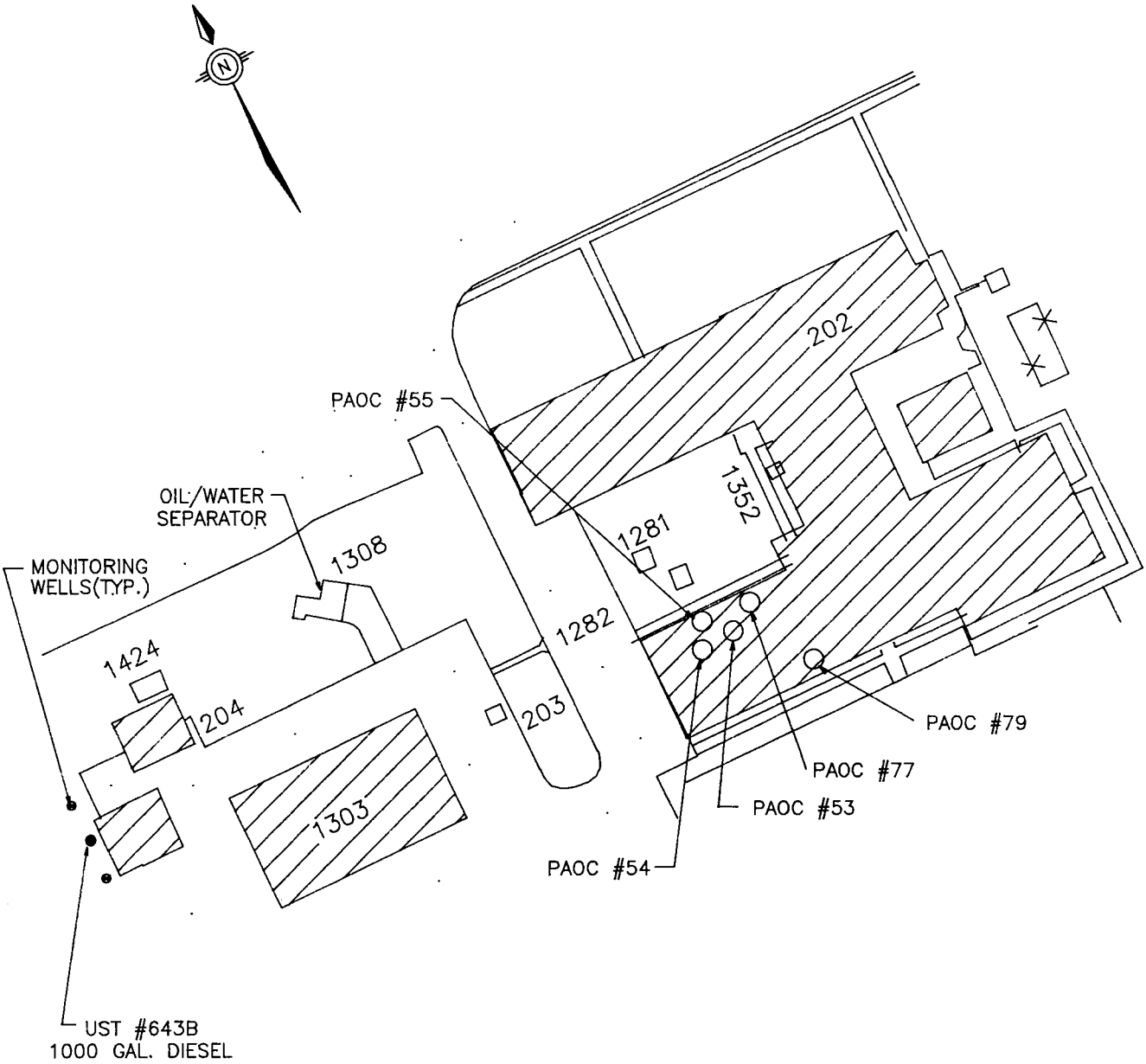

NOT TO SCALE

RCRA FACILITY
ASSESSMENT
NAVAL COMPLEX
CHARLESTON, S.C.

FIGURE 4-55
PAOC #55
BUILDING 202, SAA

DWG DATE: 02/16/94 | DWG NAME: 29AOC55

4.58.5 Exposure Potential

This PAOC is not close to any residential areas or sensitive environments. The limited storage capacity and nature of waste limit the potential exposures to Naval Complex employees.

4.58.6 Recommended Action

No further investigation of this SAA is recommended due to the nature of the waste, storage practices, lack of evidence of a release from this unit, and limited migration pathways.

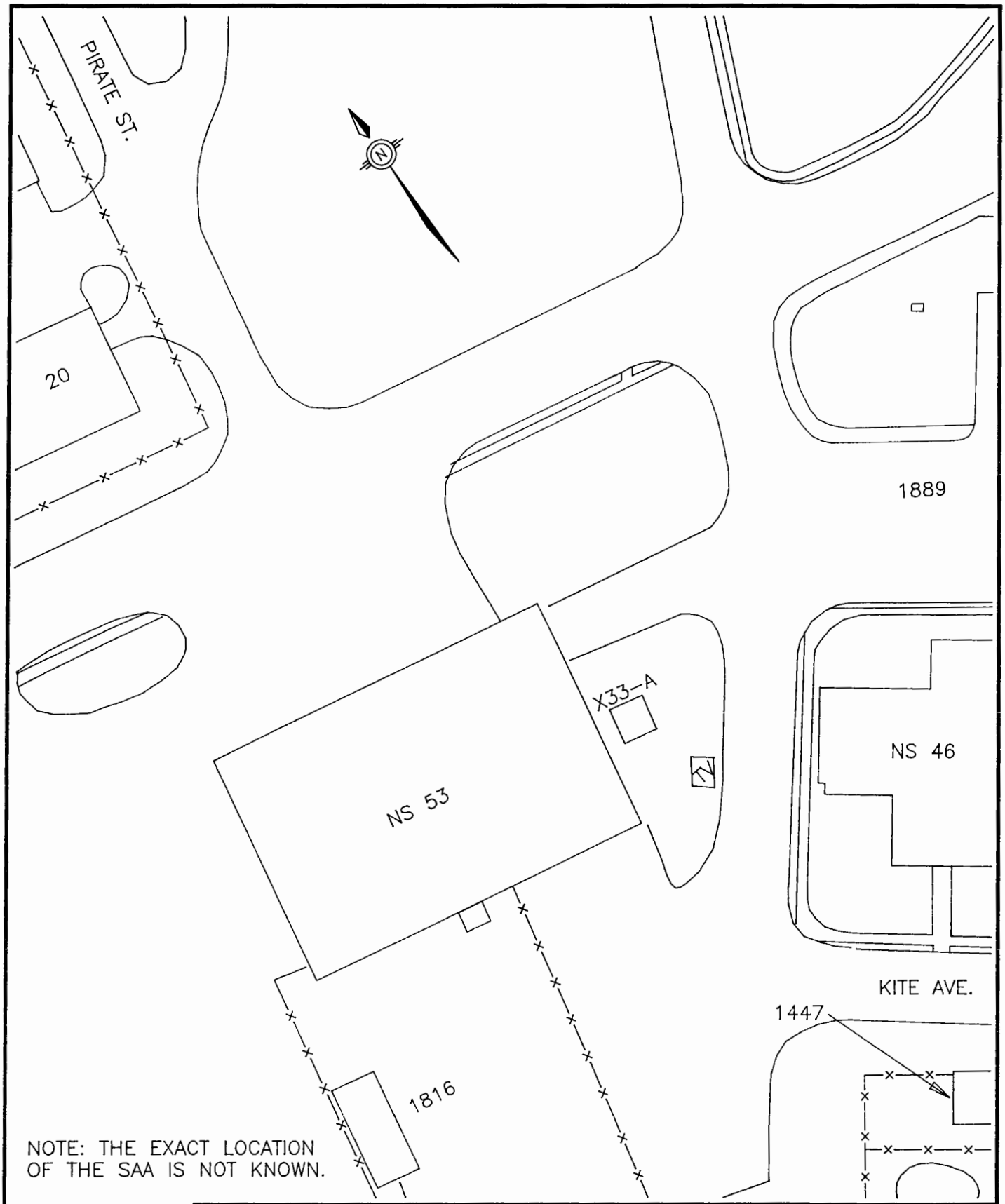

NOTE: THE EXACT LOCATION OF THE SAA IS NOT KNOWN.

NOT TO SCALE

RCRA FACILITY ASSESSMENT
NAVAL COMPLEX
CHARLESTON, S.C.

FIGURE 4-56
PAOC #56
BUILDING NS53, SAA

DWG DATE: 02/22/94 | DWG NAME: 29AOC56

4.59.6 Recommended Action

There is no evidence of a release from this unit. However, confirmation sampling is recommended due to the nature of wastes (oil cans) and the design features of the unit (located on asphalt) which may allow migration of any potential releases into underlying soil and groundwater.

4.60 PAOC #57 — Less-than-90-Day Storage Area, Building 236

4.60.1 Unit Characteristics

This PAOC is a less-than-90-day Accumulation Area (AA), which is an element of the Naval Shipyard hazardous waste management system. Hazardous wastes are accumulated at an AA for less than 90 days, then transferred to a permitted hazardous waste storage facility prior to transport outside the Charleston Naval Complex for ultimate treatment or disposal. Figure 1-1 locates Building 236 within the Complex. Figure 4-57 locates the PAOC within Building 236.

This unit is a 20'x 20' steel shed with an unbermed asphalt floor. Wastes were stored a closed one 55-gallon drum on a wood pallet. The AA was observed to be in good condition and was not storing waste. There was no other indication, however, that the SAA was no longer operational.

4.60.2 Waste Characteristics

This unit was formerly used to store refrigeration oil, oily rags, and freon cleaning solvent. During the visual site inspection conducted on February 2, 1994, no wastes were being stored at this location.

4.60.3 Migration Pathways

Because this SAA is enclosed, soil, groundwater, and surface water migration is unlikely. The asphalt in the vicinity of this SAA is free of cracks, but may still lack the integrity to protect the underlying soil and groundwater from a potential release.

4.60.4 Evidence of Release

No spill reports, inspection reports, employee interviews, or visual observations indicate the incidence of spills at this AA.

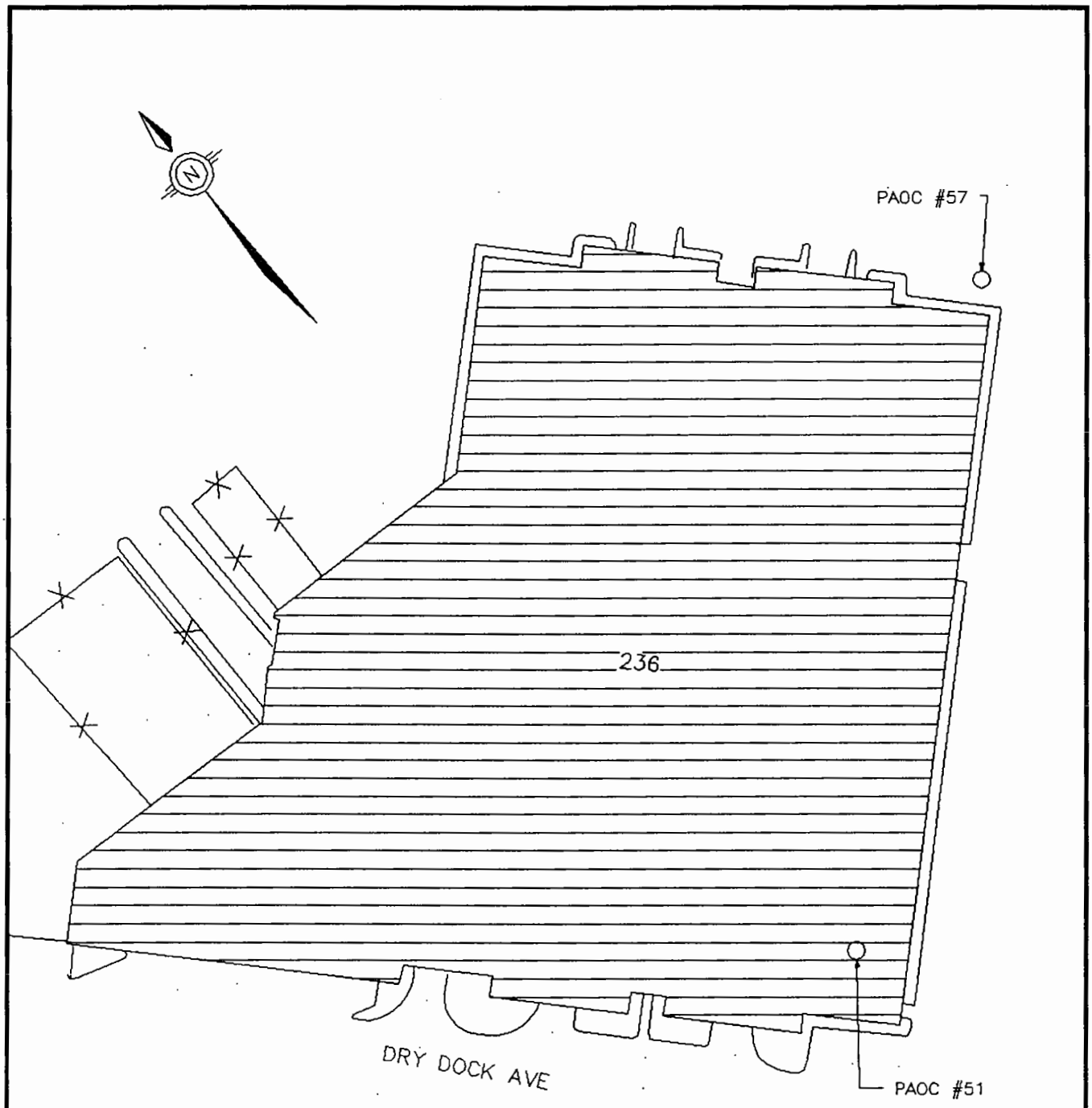

NOT TO SCALE

RCRA FACILITY
ASSESSMENT
NAVAL COMPLEX
CHARLESTON, S.C.

FIGURE 4-57
PAOC #57
BUILDING 236, <90 STORAGE AREA

DWG DATE: 02/10/94 | DWG NAME: 27N236

4.60.5 Exposure Potential

This PAOC is not close to any residential areas but is within 300 feet of the Cooper River. The limited storage capacity and nature of waste, however, limit the potential exposures to Naval Complex employees.

4.60.6 Recommended Action

There is no evidence of a release from this unit. However, confirmation sampling is recommended due to the nature of the waste (POLs) and the design of the unit (on top of asphalt) which may allow migration of any potential releases into the underlying soil and groundwater.

4.61 PAOC #58 — Satellite Accumulation Area, Building 5

4.61.1 Unit Characteristics

This SAA is an element of the Naval Shipyard hazardous waste management system. Hazardous wastes are accumulated at an SAA until 55 gallons of waste are accumulated [in accordance with 40CFR 262.34(c)], then immediately transferred to a permitted hazardous waste storage facility prior to transport outside the Charleston Naval Complex for ultimate treatment or disposal. Figure 1-1 locates Building 5 within the Complex. Figure 4-58 locates the PAOC near Building 5.

This satellite accumulation area is located immediately outside Building 5, near the northwest corner of the building. PAOC #58 is a 4'x 10' wooden shed with a tongue-and-groove wooden floor. The drums stored here are within a 3'x 10' secondary containment. The age of the unit is unknown.

4.61.2 Waste Characteristics

The drums within the SAA receive small, empty containers (e.g., adhesive cans, aerosol cans, paint cans, and brushes).

4.61.3 Migration Pathways

At this outdoor SAA, small, empty containers are collected into drums, which are protected by secondary containment within the shed. Therefore, the likelihood of any liquid escaping the unit is remote.

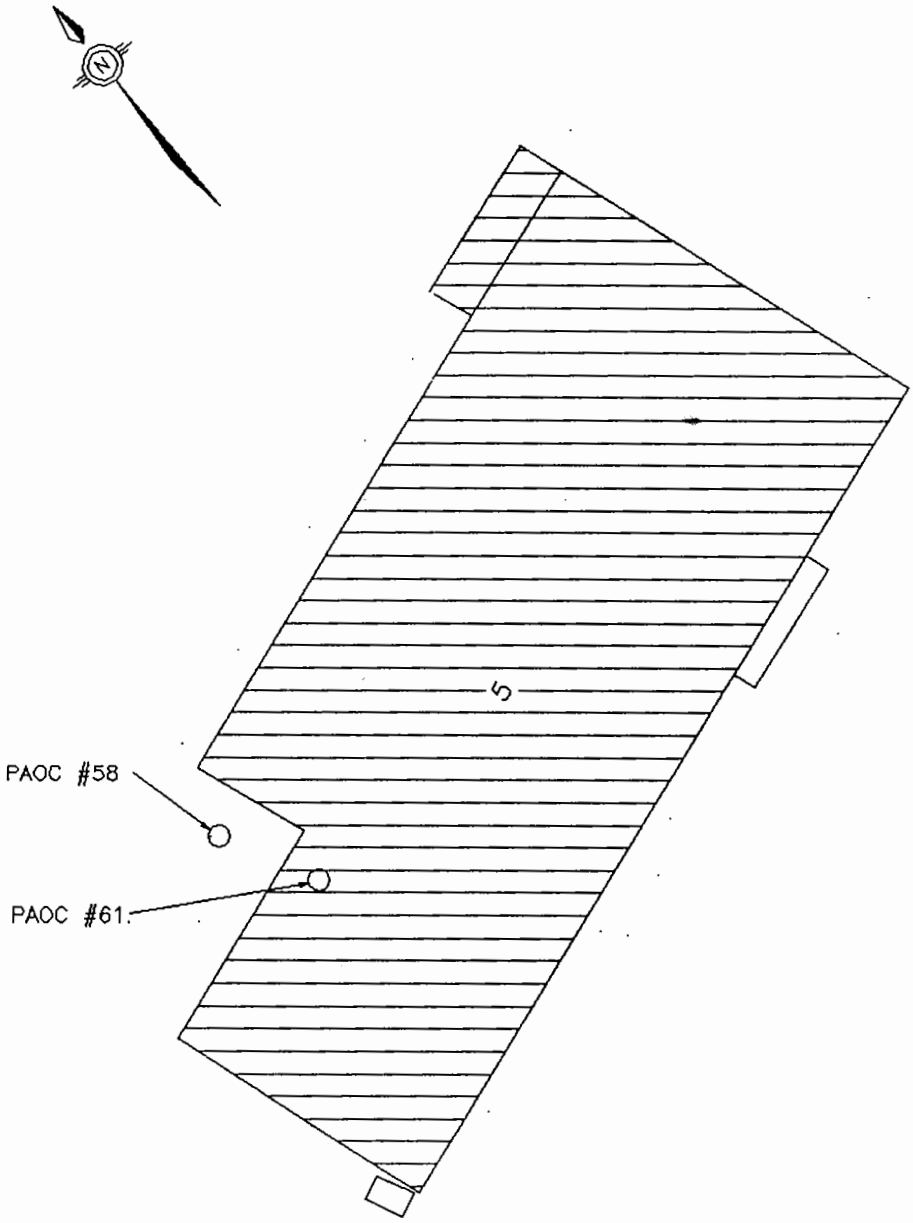

NOT TO SCALE

RCRA FACILITY
ASSESSMENT
NAVAL COMPLEX
CHARLESTON, S.C.

FIGURE 4-58
PAOC #58
BUILDING 5, SAA

DWG DATE: 02/10/94 | DWG NAME: 27N5

4.61.4 Evidence of Release

No spill reports, inspection reports, employee interviews or visual observations indicated spills at this unit.

4.61.5 Exposure Potential

This PAOC is not close to any residential areas or sensitive environments. The limited storage capacity and nature of waste limit the potential exposures to Naval Complex employees.

4.61.6 Recommended Action

No further investigation of this SAA is recommended due to the nature of the waste (empty cans, brushes, etc.), storage practices, lack of evidence of a release from this unit, and limited migration pathways.

4.62 PAOC #59 — Less-than-90-Day Accumulation Area, Building 228

4.62.1 Unit Characteristics

This PAOC is a less-than-90-day Accumulation Area (AA), which is an element of the Naval Shipyard hazardous waste management system. Hazardous wastes are accumulated at an AA for less than 90 days, then transferred to a permitted hazardous waste storage facility prior to transport outside the Charleston Naval Complex for ultimate treatment or disposal. Figure 1-1 locates Building 228 within the Complex. Figure 4-59 locates the PAOC within Building 228.

Wastes stored at this AA are in 55-gallon drums. A 55-gallon spill kit is also present. The AA consists of a 6'x 10'x 7' wooden structure over asphalt with the perimeter defined by a yellow and black painted barrier.

4.62.2 Waste Characteristics

Items reported/observed to be stored at this AA include aerosol cans, empty adhesive cans, and glue-contaminated debris.

4.62.3 Migration Pathways

Because this AA is located inside Building 228 and is underlain by an asphalt floor, soil, groundwater, and surface water migration is unlikely.

4.62.4 Evidence of Release

No spill reports, inspection reports, employee interviews, or visual observations indicate spills at this AA.

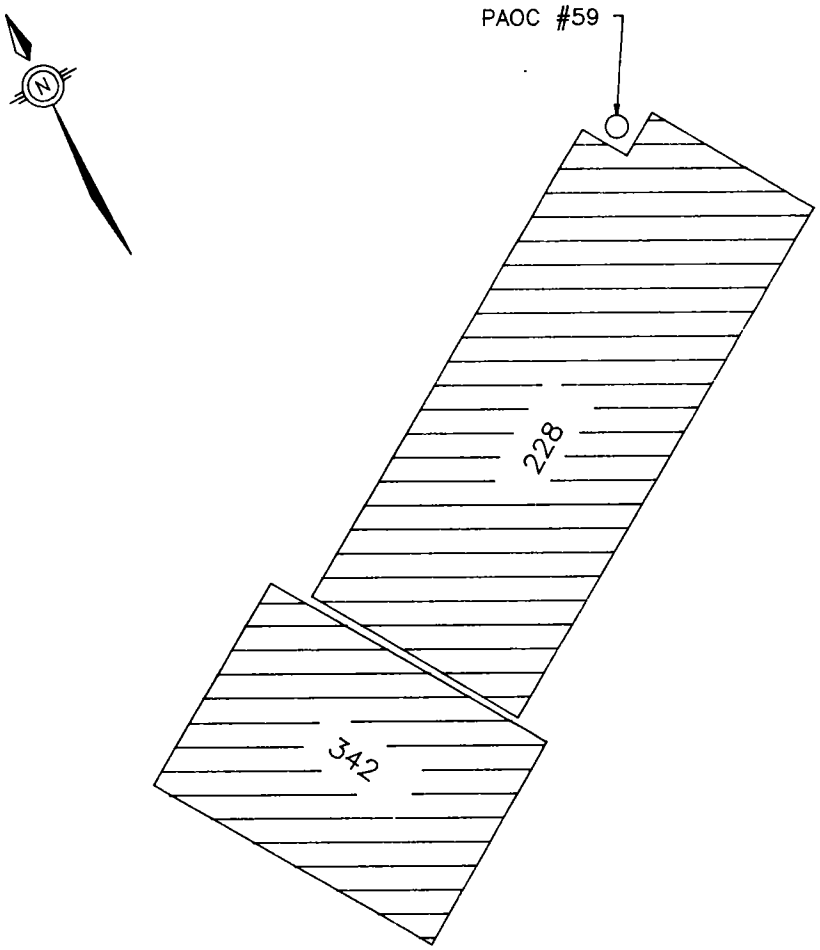

NOT TO SCALE

RCRA FACILITY
ASSESSMENT
NAVAL COMPLEX
CHARLESTON, S.C.

FIGURE 4-59
PAOC #59
BUILDING 228, <90 STORAGE AREA

DWG DATE: 02/16/94 | DWG NAME: 29AOC59

4.62.5 Exposure Potential

This PAOC is not close to any residential areas or sensitive environments. The limited storage capacity and nature of waste limit the potential exposures to Naval Complex employees.

4.62.6 Recommended Action

No further investigation of this SAA is recommended due to the nature of the waste, storage practices, lack of evidence of a release from this unit, and limited migration pathways.

4.63 PAOC #60 — Less-than-90-Day Accumulation Area, Building 1245

4.63.1 Unit Characteristics

This PAOC is a less-than-90-day Accumulation Area (AA), which is an element of the Naval Shipyard hazardous waste management system. Hazardous wastes are accumulated at an AA for less than 90 days, then transferred to a permitted hazardous waste storage facility prior to transport outside the Charleston Naval Complex for ultimate treatment or disposal. Figure 1-1 locates Building 1245 within the Complex. Figure 4-60 locates the PAOC within Building 1245. Information concerning this unit's design and construction are currently not available.

4.63.2 Waste Characteristics

Empty paint cans and empty trichloroethane (TCE) cans are reportedly stored at this AA. The major constituents of concern are volatile organic compounds and metals.

4.63.3 Migration Pathways

Information is currently not available to determine migration pathways.

4.63.4 Evidence of Release

Information is currently not available to determine evidence of release.

4.63.5 Exposure Potential

This PAOC is not close to any residential areas or sensitive environments. Additional information is currently not available.

4.63.6 Recommended Action

Due to insufficient information regarding this AA, no RCRA Facilty Assessment can be made until adequate information is made available.

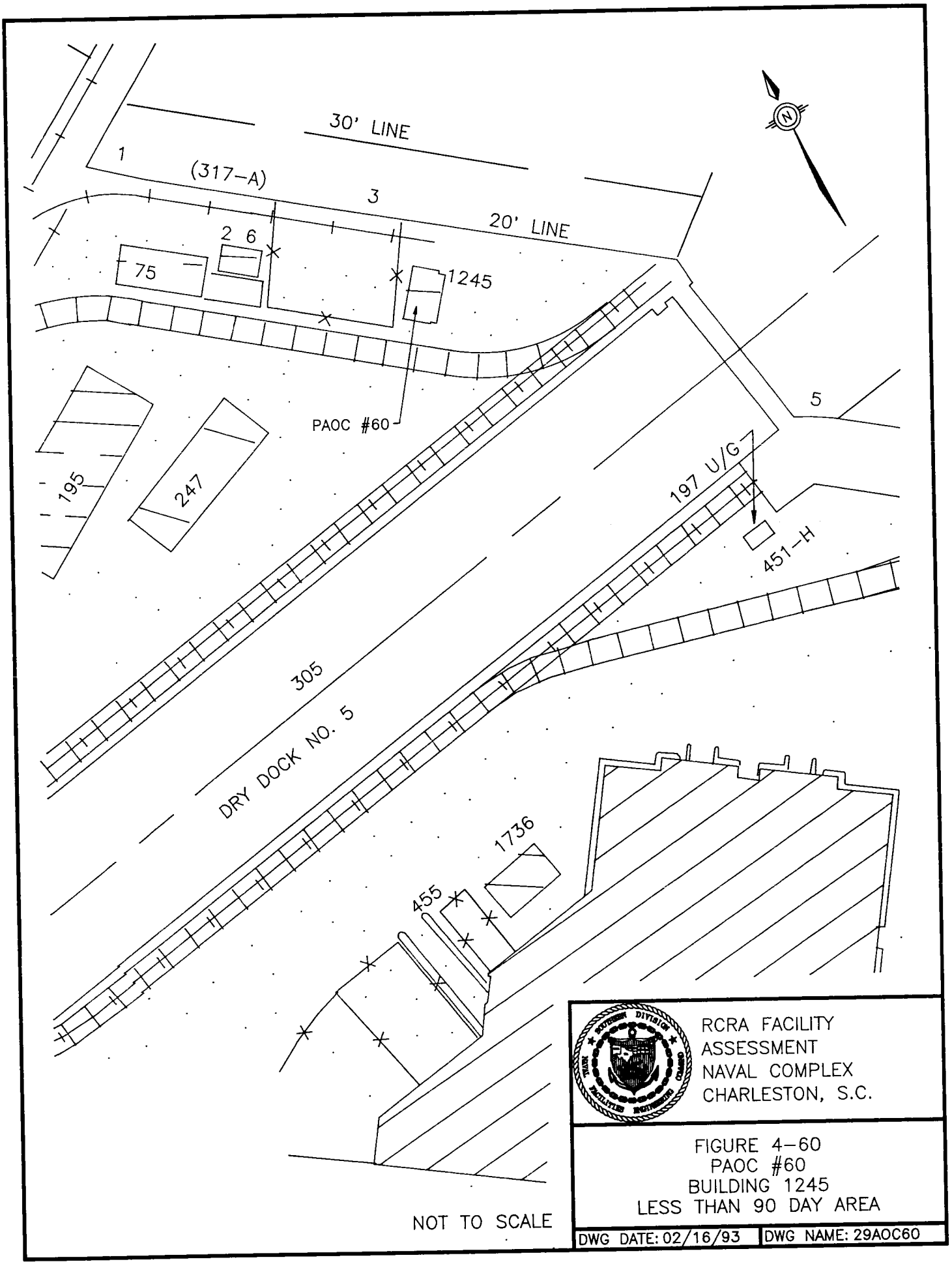
30' LINE
1
(317-A)
3
20' LINE
2 6
75
1245
PAOC #60
5
195
247
197 U/G
451-H
305
DRY DOCK NO. 5
1736
455
NOT TO SCALE
RCRA FACILITY
ASSESSMENT
NAVAL COMPLEX
CHARLESTON, S.C.
FIGURE 4-60
PAOC #60
BUILDING 1245
LESS THAN 90 DAY AREA
DWG DATE: 02/16/93
DWG NAME: 29AOC60

4.64 PAOC #61 — Satellite Accumulation Area, Building 5

4.64.1 Unit Characteristics

This SAA is an element of the Charleston Naval Shipyard hazardous waste management system. Hazardous wastes are accumulated at an SAA until 55 gallons of waste are accumulated [in accordance with 40 CFR 262.34(c)], then immediately transferred to a permitted hazardous waste storage facility prior to transport outside the Charleston Naval Complex for ultimate treatment or disposal. This SAA is no longer operational. Figure 1-1 locates Building 5 within the Complex.

Wastes were stored in closed 55-gallon drums on a 6' x 8' wooden deck elevated above a concrete floor. No containment berm existed. Figure 4-61 locates the SAA in Building 5.

4.64.2 Waste Characteristics

Aerosol cans, adhesive cans, and adhesive-contaminated debris were stored. The major constituents of concern are volatile organic compounds.

4.64.3 Migration Pathways

Because this SAA is located inside Building 5, soil, groundwater, and surface waters are unlikely pathways. The floor in the vicinity of this SAA is free of cracks.

4.64.4 Evidence of Release

No spill reports, inspection reports, employee interviews or visual observations indicate spills at this SAA.

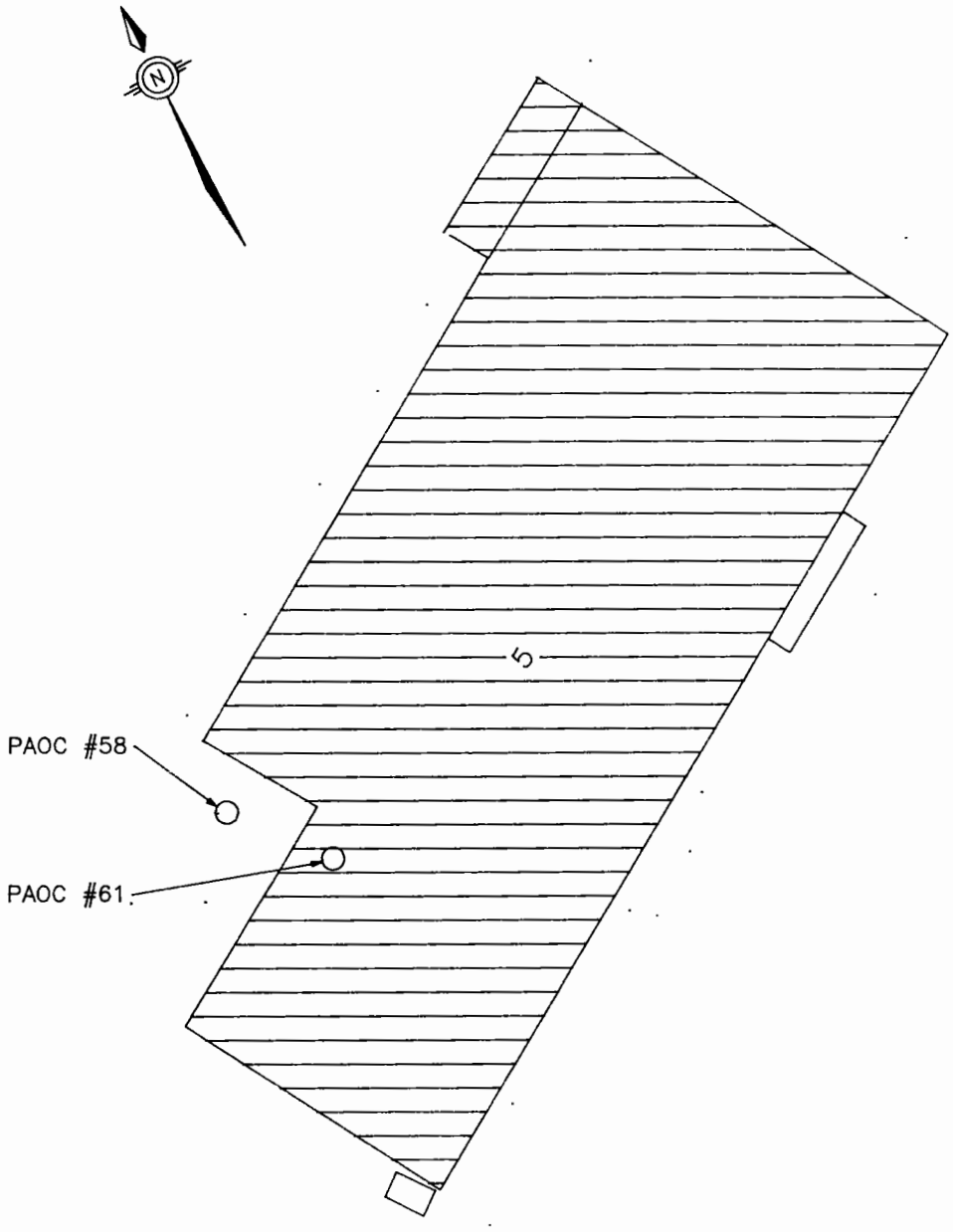

NOT TO SCALE

RCRA FACILITY
ASSESSMENT
NAVAL COMPLEX
CHARLESTON, S.C.

FIGURE 4-61
PAOC #61
BUILDING 5, SAA

DWG DATE: 02/16/94 | DWG NAME: 29AOC61

4.64.5 Exposure Potential

This SAA is not in close proximity to any residential areas or sensitive environments. The nature of the waste, limited migration pathways, and lack of evidence of a major release minimize potential exposure to complex employees.

4.64.6 Recommended Action

This SAA is no longer operational. Per 40 CFR 262.34(a)(1), certification of closure is required in accordance with 40 CFR 265.111 and 114.

4.65 PAOC #62 — Satellite Accumulation Area, Building 2A

4.65.1 Unit Characteristics

This SAA is an element of the Charleston Naval Shipyard hazardous waste management system. Hazardous wastes are accumulated at an SAA until 55 gallons of waste are accumulated [in accordance with 40 CFR 262.34(c)], then immediately transferred to a permitted hazardous waste storage facility prior to transport outside the Charleston Naval Complex for ultimate treatment or disposal. Figure 1-1 locates Building 2A within the Complex.

Wastes are stored in 55-gallon drums which are on pallets. The floor surface is wood. The drums are enclosed in a 10'x 6' tarpaulin shed. Figure 4-62 locates the SAA near Building 2A.

4.65.2 Waste Characteristics

Aerosol cans, spray paint, empty adhesive tubes and glue cans, cutting oils/fluids, kerosene-contaminated rags, glue-contaminated rags, and paint-contaminated debris are stored. The major constituents of concern are volatile organic compounds, metals, and petroleum hydrocarbons.

4.65.3 Migration Pathways

This SAA is located outside of Building 2A; therefore, surface migration from surface runoff may occur, although the tarpaulin shed helps minimize exposure of the area to precipitation. Soil and groundwater are potential migration pathways due to the wooden base of the SAA.

4.65.4 Evidence of Release

No spill reports, inspection reports, employee interviews, or visual observations indicate spills at this SAA.

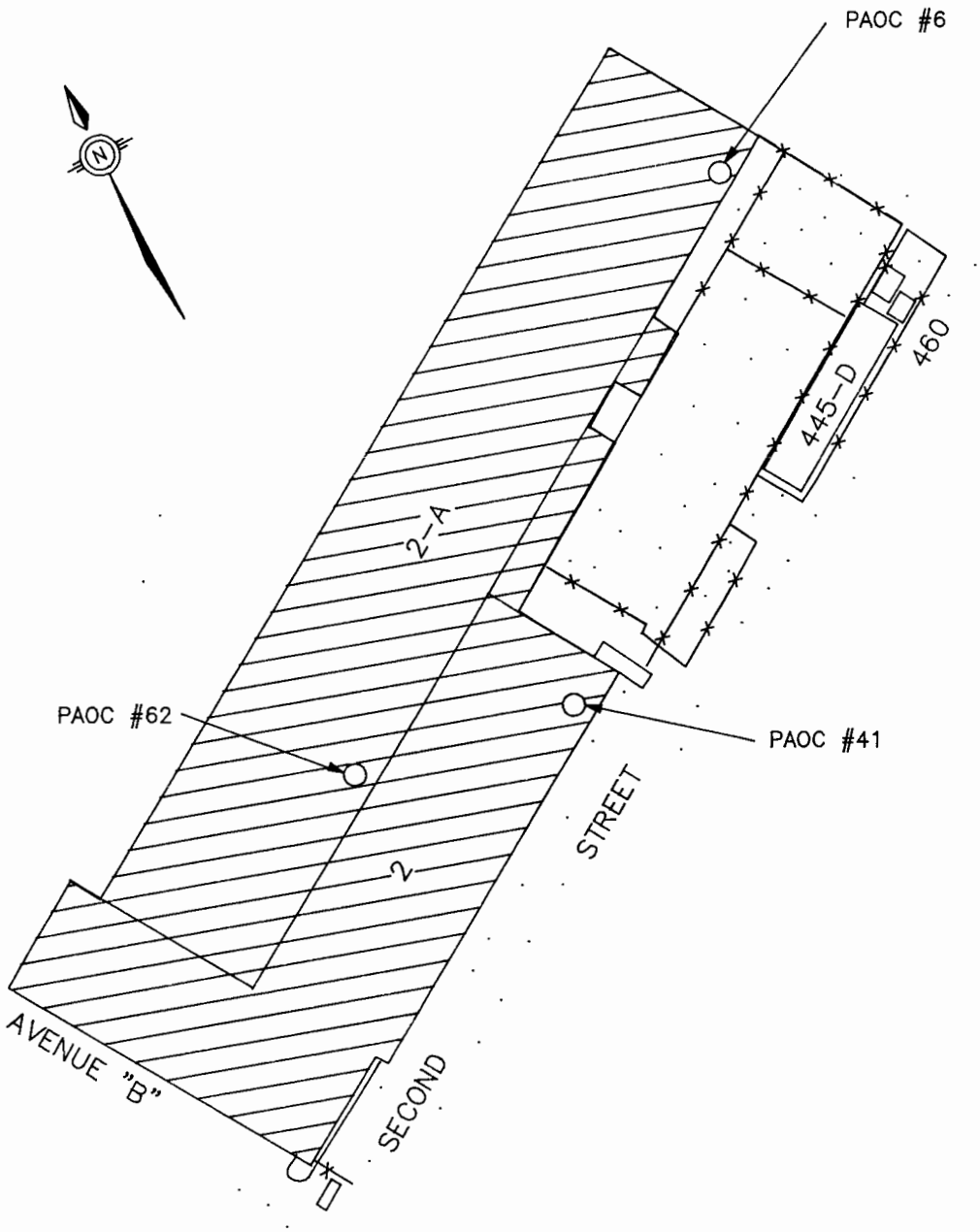

NOT TO SCALE

RCRA FACILITY
ASSESSMENT
NAVAL COMPLEX
CHARLESTON, S.C.

FIGURE 4-62
PAOC #62
BUILDING 2-A, <90 STORAGE AREA

DWG DATE: 02/16/94 | DWG NAME: 29AOC62

4.65.5 Exposure Potential

This SAA is not close to any residential areas or sensitive environments. The lack of evidence of a major release minimize the likelihood of potential exposures to complex employees.

4.65.6 Recommended Action

Due to the likelihood of contaminant migration and lack of a thorough assessment of the potential hazards, a RFI is recommended.

4.66 PAOC #63 — Satellite Accumulation Area, Building 218

4.66.1 Unit Characteristics

This SAA is an element of the Charleston Naval Shipyard hazardous waste management system. Hazardous wastes are accumulated at an SAA until 55-gallons of waste are accumulated [in accordance with 40 CFR 262.34(c)], then immediately transferred to a permitted hazardous waste storage facility prior to transport outside the Charleston Naval Complex for ultimate treatment or disposal. Figure 1-1 locates Building 218 within the Complex.

Wastes are stored in 55-gallon drums on an asphalt paved surface. No containment berm exists. Figure 4-63 locates the SAA near Building 218.

4.66.2 Waste Characteristics

Spent paint and aerosol cans, empty adhesive and solvent containers, epoxy containers, paint, oily rags, used abrasive blast grit, and waste oil are stored. The major constituents of concern are volatile organic compounds, metals, and petroleum hydrocarbons.

4.66.3 Migration Pathways

This SAA is located outside of Building 2A; therefore, surface migration from surface runoff may occur. The pavement in the vicinity of the SAA is free of cracks.

4.66.4 Evidence of Release

No spill reports, inspection reports, employee interviews, or visual observations indicate spills at this SAA.

4.66.5 Exposure Potential

This SAA is not close to any residential areas or sensitive environments. The limited storage capacity, nature of waste, and lack of evidence of a major release minimize the potential exposures to complex employees.

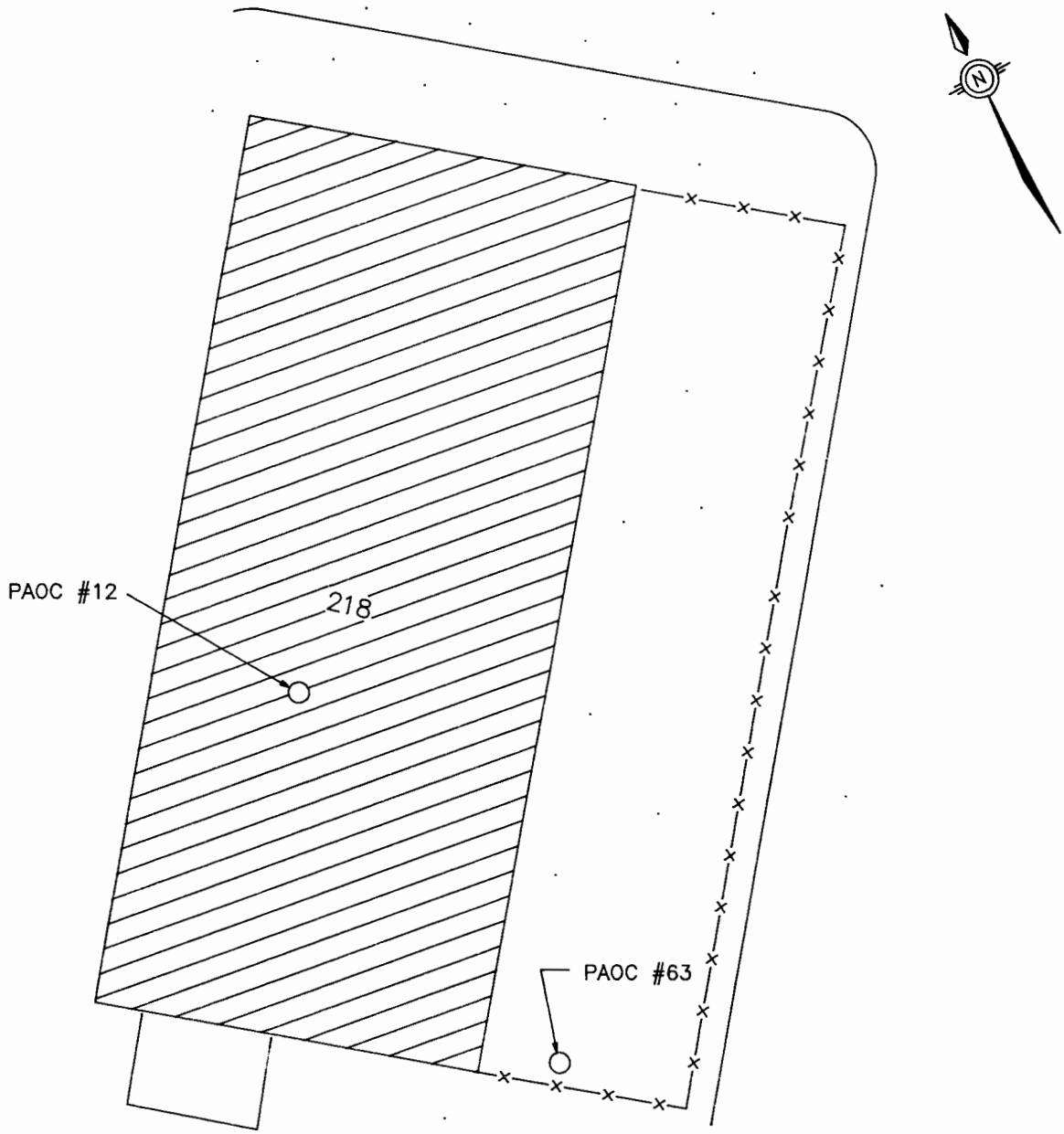

NOT TO SCALE

RCRA FACILITY
ASSESSMENT
NAVAL COMPLEX
CHARLESTON, S.C.

FIGURE 4-63
PAOC #63
BUILDING 218, SAA

DWG DATE: 02/16/94 | DWG NAME: 29AOC63

4.66.6 Recommended Action

There is no evidence of a release from this unit. However, confirmation sampling is recommended due to the nature of the waste and the design of the unit which may allow migration of any potential releases.

4.67 PAOC #64 — Satellite Accumulation Area, Building 187

4.67.1 Unit Characteristics

This SAA is an element of the Charleston Naval Shipyard hazardous waste management system. Hazardous wastes are accumulated at an SAA until 55-gallons of waste are accumulated [in accordance with 40 CFR 262.34(c)], then immediately transferred to a permitted hazardous waste storage facility prior to transport outside the Charleston Naval Complex for ultimate treatment or disposal. Figure 1-1 locates Building 187 within the Complex.

Wastes are stored in closed 55-gallon drums and plastic bags. The floor surface is floor tile overlying concrete. No containment berm exists. Figure 4-64 locates the SAA within Building 187.

4.67.2 Waste characteristics

Aerosol cans and miscellaneous empty cans are stored. Sufficient information was not available to adequately characterize the waste.

4.67.3 Migration Pathways

Because this SAA is located inside Building 187, soil, groundwater, and surface waters are unlikely pathways. The floor in the vicinity of this SAA is free of cracks.

4.67.4 Evidence of Release

No spill reports, inspection reports, employee interviews, or visual observations indicate spills at this SAA.

4.67.5 Exposure Potential

This SAA is not close to any residential areas or sensitive environments. The limited storage capacity, nature of waste, and lack of spill evidence minimizes the potential exposures to complex employees.

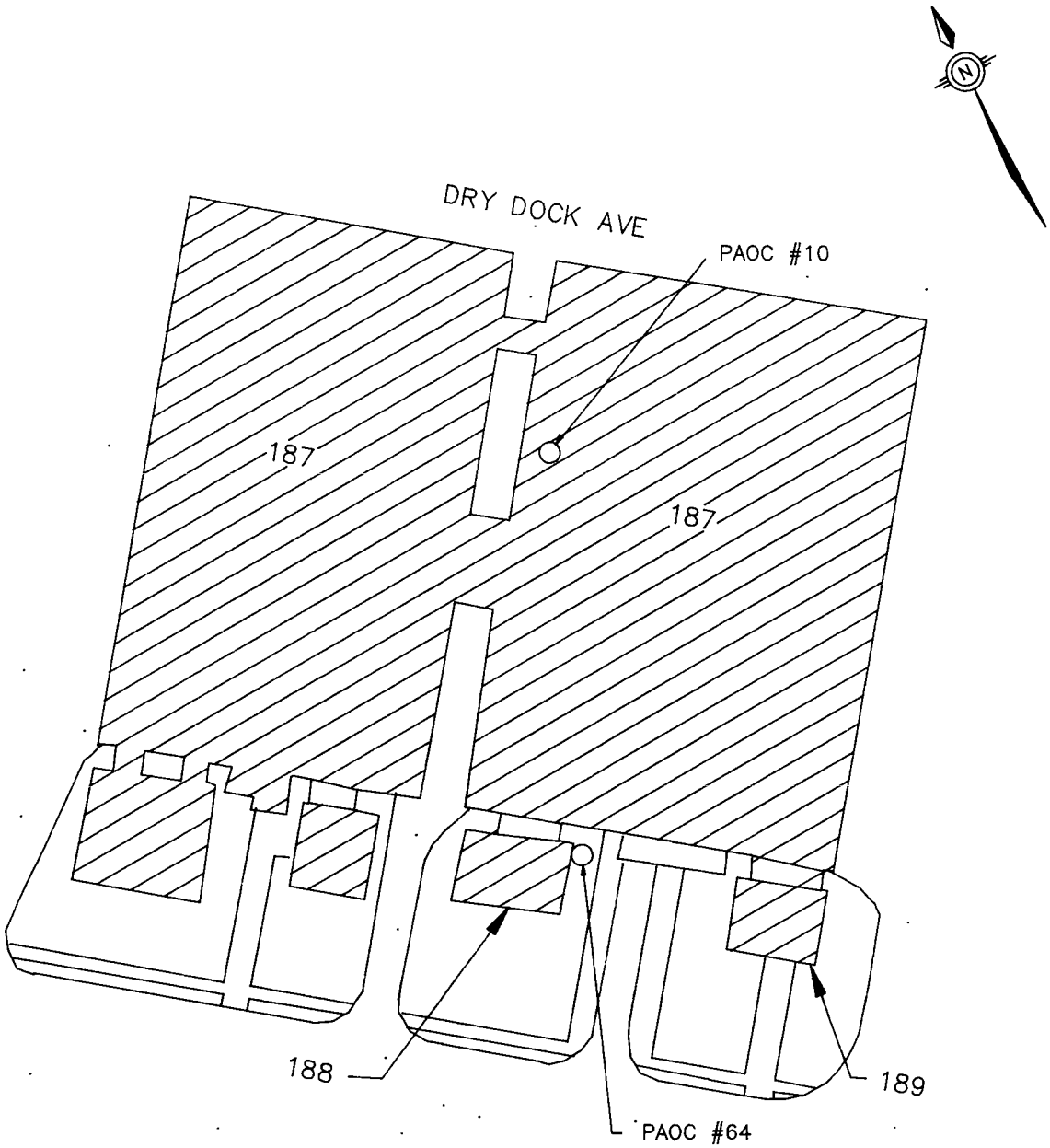

NOT TO SCALE

RCRA FACILITY
ASSESSMENT
NAVAL COMPLEX
CHARLESTON, S.C.

FIGURE 4-64
PAOC #64
BUILDING 187, SAA

DWG DATE: 02/16/94 | DWG NAME: 29AOC64

4.67.6 Recommended Action

No further investigation of this SAA is recommended due to the nature of the waste (empty cans contained by 55-gallon drums and plastic bags), storage practices, lack of evidence of a release from this unit, and limited migration pathways.

4.68 POAC #65 — Satellite Accumulation Area, Pier G

4.68.1 Unit Characteristics

This SAA is an element of the Charleston Naval Shipyard hazardous waste management system. Hazardous wastes are accumulated at an SAA until 55-gallons of waste are accumulated [in accordance with 40 CFR 262.34(c)], then immediately transferred to a permitted hazardous waste storage facility prior to transport outside the Charleston Naval Complex for ultimate treatment or disposal. This SAA is no longer located on Pier G. Figure 1-1 locates Pier G within the Complex. Figure 4-65 locates the former position of the SAA on Pier G.

4.68.2 Waste Characteristics

Sufficient information is not available to determine waste characteristics.

4.68.3 Migration Pathways

Surface water is a potential migration pathway due to the immediate proximity of the Cooper River to Pier G.

4.68.4 Evidence of Release

Sufficient information is not available to determine evidence of release.

4.68.5 Exposure Potential

This SAA is not close to any residential areas. However, the Cooper River is in the immediate vicinity of Pier G and may be impacted if a spill has occurred.

4.68.6 Recommended Action

This SAA is no longer operational. Per 40 CFR 262.34(a)(1), certification of closure is required in accordance with 40 CFR 265.111 and 114.

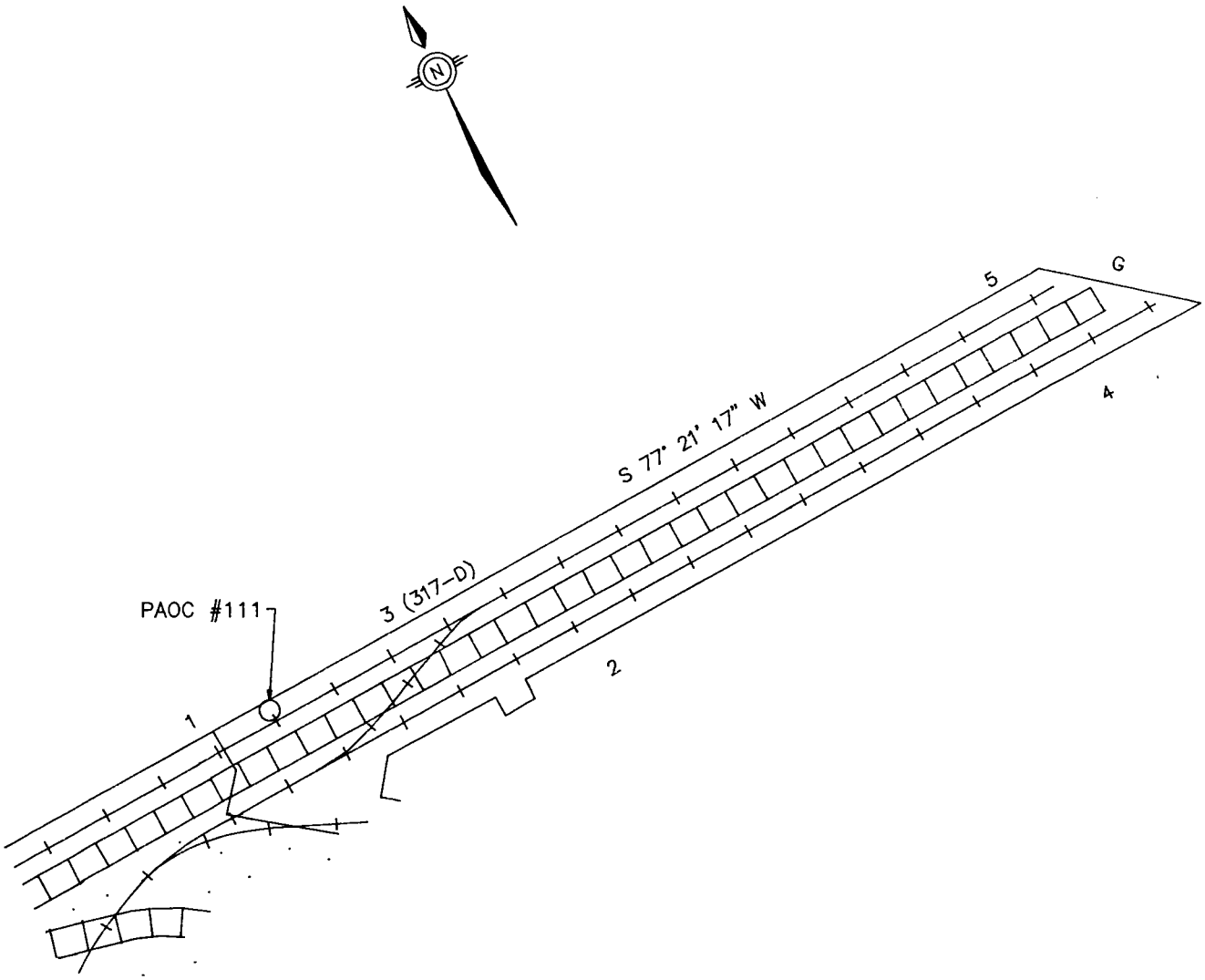

NOT TO SCALE

RCRA FACILITY
ASSESSMENT
NAVAL COMPLEX
CHARLESTON, S.C.

FIGURE 4-65
PAOC #65
PIER G, SAA

DWG DATE: 02/16/94 | DWG NAME: 29AOC65

NOTE: PAOC #65 IS NO LONGER IN SERVICE AND COULD NOT BE LOCATED.

4.69 PAOC #66 — Satellite Accumulation Area, Building 212

4.69.1 Unit Characteristics

This SAA is an element of the Charleston Naval Shipyard hazardous waste management system. Hazardous wastes are accumulated at an SAA until 55 gallons of waste are accumulated [in accordance with 40 CFR 262.34(c)], then immediately transferred to a permitted hazardous waste storage facility prior to transport outside the Charleston Naval Complex for ultimate treatment or disposal. This SAA has been dismantled. Figure 1-1 locates Building 212 within the Complex.

Wastes were stored in 55-gallon drums on an asphalt surface. No containment berm existed. Figure 4-66 locates the former position of the SAA near Building 212.

4.69.2 Waste Characteristics

Empty cans, paint-contaminated debris, liquid paint wastes, and degreasing wastes were stored at this SAA. The major constituents of concern are volatile organic compounds, and petroleum hydrocarbons.

4.69.3 Migration Pathways

This SAA is located outside of Building 212; therefore, surface migration from surface runoff may occur. The asphalt surface on which the unit was located is not impermeable to the solvents stored here; therefore, soil and groundwater are potential migration pathways.

4.69.4 Evidence of Release

No spill reports, inspection reports, employee interviews, or physical evidence indicate spills at this SAA.

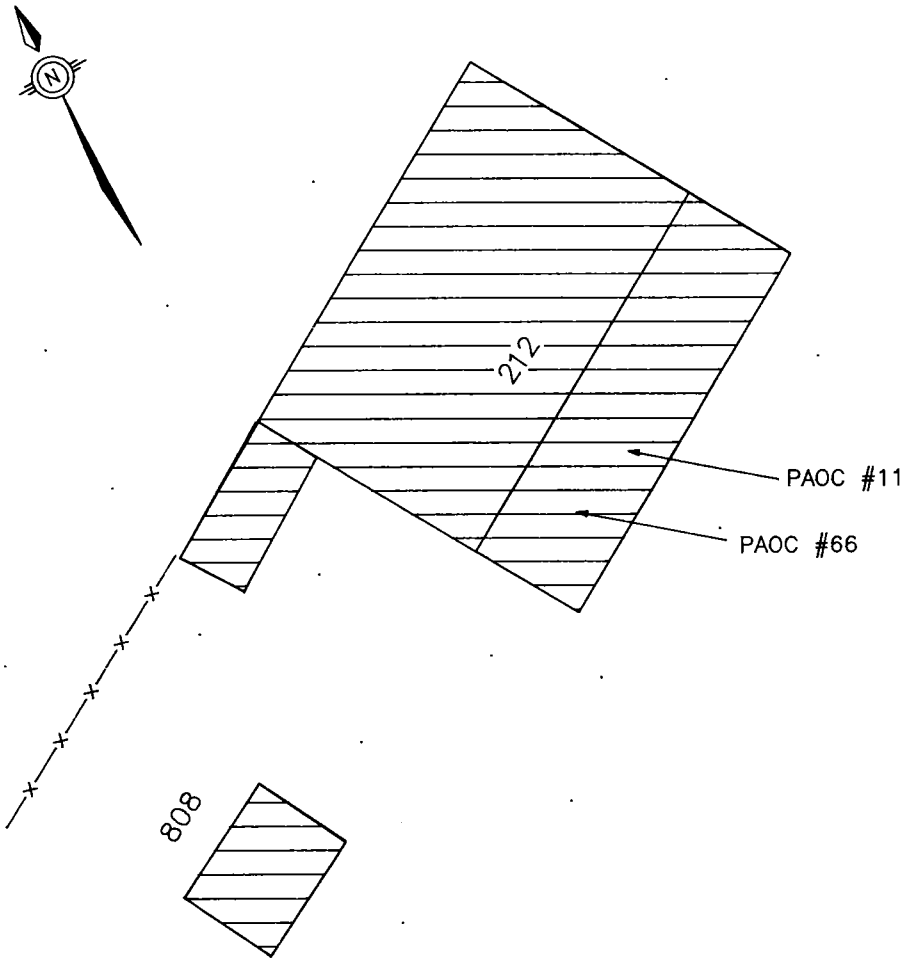

NOT TO SCALE

RCRA FACILITY
ASSESSMENT
NAVAL COMPLEX
CHARLESTON, S.C.

FIGURE 4-66
PAOC #66
BUILDING 212, SAA

NOTE: THE EXACT LOCATION OF PAOC #66 IS NOT KNOWN SINCE IT HAS BEEN DISMANTLED.

DWG DATE: 02/16/94 | DWG NAME: 29AOC66

4.69.5 Exposure Potential

There is the potential for workers who frequent this area to be exposed to airborne constituents of the solvents and possible dermal contact.

4.69.6 Recommended Action

This SAA is no longer operational. Per 40 CFR 262.34(a)(1), certification of closure is required in accordance with 40 CFR 265.111 and 114.

4.70 PAOC #67 - Satellite Accumulation Area, Pier C

4.70.1 Unit Characteristics

This SAA is an element of the Charleston Naval Shipyard hazardous waste management system. Hazardous wastes are accumulated at an SAA until 55-gallons of waste are accumulated [in accordance with 40 CFR 262.34(c)], then immediately transferred to a permitted hazardous waste storage facility prior to transport outside the Charleston Naval Complex for ultimate treatment or disposal. This SAA is no longer operational. Figure 1-1 locates Pier C within the Complex and Figure 4-67 locates the former SAA on Pier C.

4.70.2 Waste Characteristics

Empty cans, paint contaminated debris, liquid paint waste, and thinner paint were stored. The major constituents of concern are volatile organic compounds and metals.

4.70.3 Migration Pathways

Due to this unit's location on Pier C, surface water is a possible migration pathway.

4.70.4 Evidence of Release

No spill reports, inspection reports, visual observations, or employee interviews indicate spills at this unit.

4.70.5 Exposure Potential

The pier is not close to any residential areas; however, it is located near the Cooper River and organisms in this ecosystem may have been exposed.

4.70.6 Recommended Action

The Cooper River will be investigated as a separate unit and any releases from this unit would have entered the Cooper River. This SAA is no longer operational. Per 40 CFR 262.34(a)(1), certification of closure is required in accordance with 40 CFR 265.111 and 114.

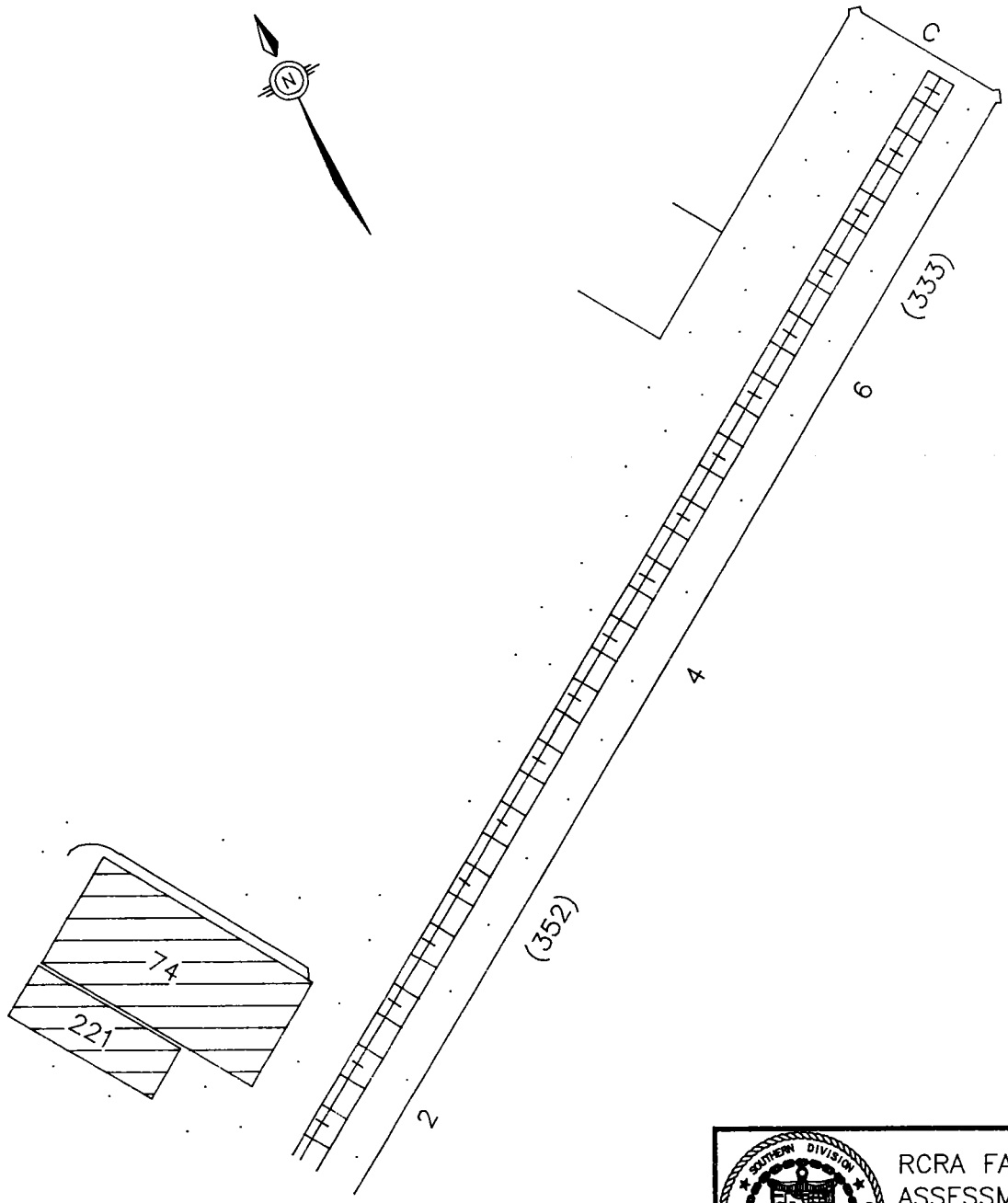

NOTE: ATTEMPTS TO LOCATE THIS SAA WERE UNSUCCESSFUL.

RCRA FACILITY
ASSESSMENT
NAVAL COMPLEX
CHARLESTON, S.C.

FIGURE 4-67
PAOC #67
PIER C, SAA

DWG DATE: 02/16/94 | DWG NAME: 29AOC67

4.71 PAOC #68 — Satellite Accumulation Area, Drydock Number 2

4.71.1 Unit Characteristics

This SAA is an element of the Charleston Naval Shipyard hazardous waste management system. Hazardous wastes are accumulated at an SAA until 55-gallons of waste are accumulated [in accordance with 40 CFR 262.34(c)], then immediately transferred to a permitted hazardous waste storage facility prior to transport outside the Charleston Naval Complex for ultimate treatment or disposal. Figure 1-1 locates DD Number 2 within the Complex. Figure 4-68 locates the SAA on the drydock.

4.71.2 Waste Characteristics

Empty paint cans, paint-contaminated debris, liquid paint waste, and thinner paint are stored. The major constituents of concern are volatile organic compounds and metals.

4.71.3 Migration Pathways

This SAA is located on a drydock in the immediate vicinity of the Cooper River and surface migration may occur from stormwater runoff discharging into the river.

4.71.4 Evidence of Release

No spill reports, inspection reports, or employee interviews indicate spills at this SAA.

4.71.5 Exposure Potential

The drydock is not close to any residential areas; however, it is located near the Cooper River which may be impacted if a spill occurs. The potential for exposure to workers who frequent this site is minimized due to the nature of the waste and the minimal amount of waste stored.

4.71.6 Recommended Action

The Cooper River will be investigated as a separate unit and any releases from this unit would have entered the Cooper River. No further action is recommended for this PAOC.

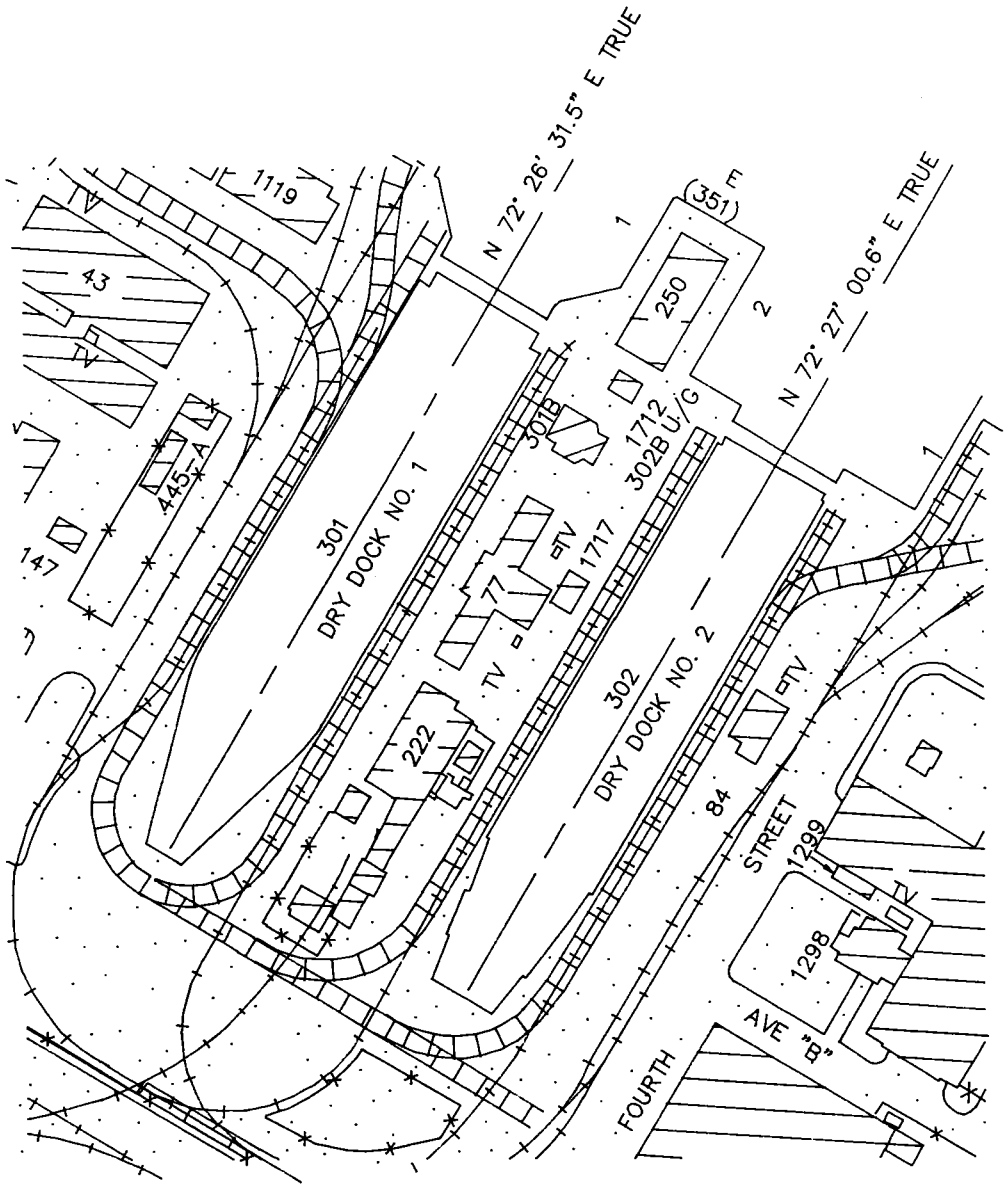

NOT TO SCALE

NOTE: THE EXACT LOCATION OF PAOC #68 IS UNKNOWN

RCRA FACILITY ASSESSMENT
NAVAL COMPLEX
CHARLESTON, S.C.

FIGURE 4-68
PAOC #68
DD #1, SAA

DWG DATE: 02/16/94 | DWG NAME: 29AOC68

4.72 PAOC #69 — Satellite Accumulation Area, ARDM 3

4.72.1 Unit Characteristics

This SAA is an element of the Naval Shipyard hazardous waste management system. Hazardous wastes are accumulated at an SAA until 55 gallons of waste are accumulated [in accordance with 40 CFR 262.34(c)], then immediately transferred to a permitted hazardous waste storage facility prior to transport outside the Charleston Naval Complex for ultimate treatment or disposal. Figure 1-1 locates ARDM within the Complex and Figure 4-69 locates the position of ARDM. ARDM is a floating drydock.

4.72.2 Waste Characteristics

The type of wastes stored is unknown.

4.72.3 Migration Pathways

Due to the unit's location on the Cooper River, surface water is a viable pathway for migration.

4.72.4 Evidence of Release

Sufficient information is not available to determine evidence of release.

4.72.5 Exposure Potential

This unit is not close to any residential areas. ARDM 3 is berthed in the Cooper River; therefore, if a release occurred, the Cooper River might be impacted.

4.72.6 Recommended Action

The Cooper River will be investigated as a separate unit and any releases from this unit would have entered the Cooper River. No further action is recommended for this PAOC.

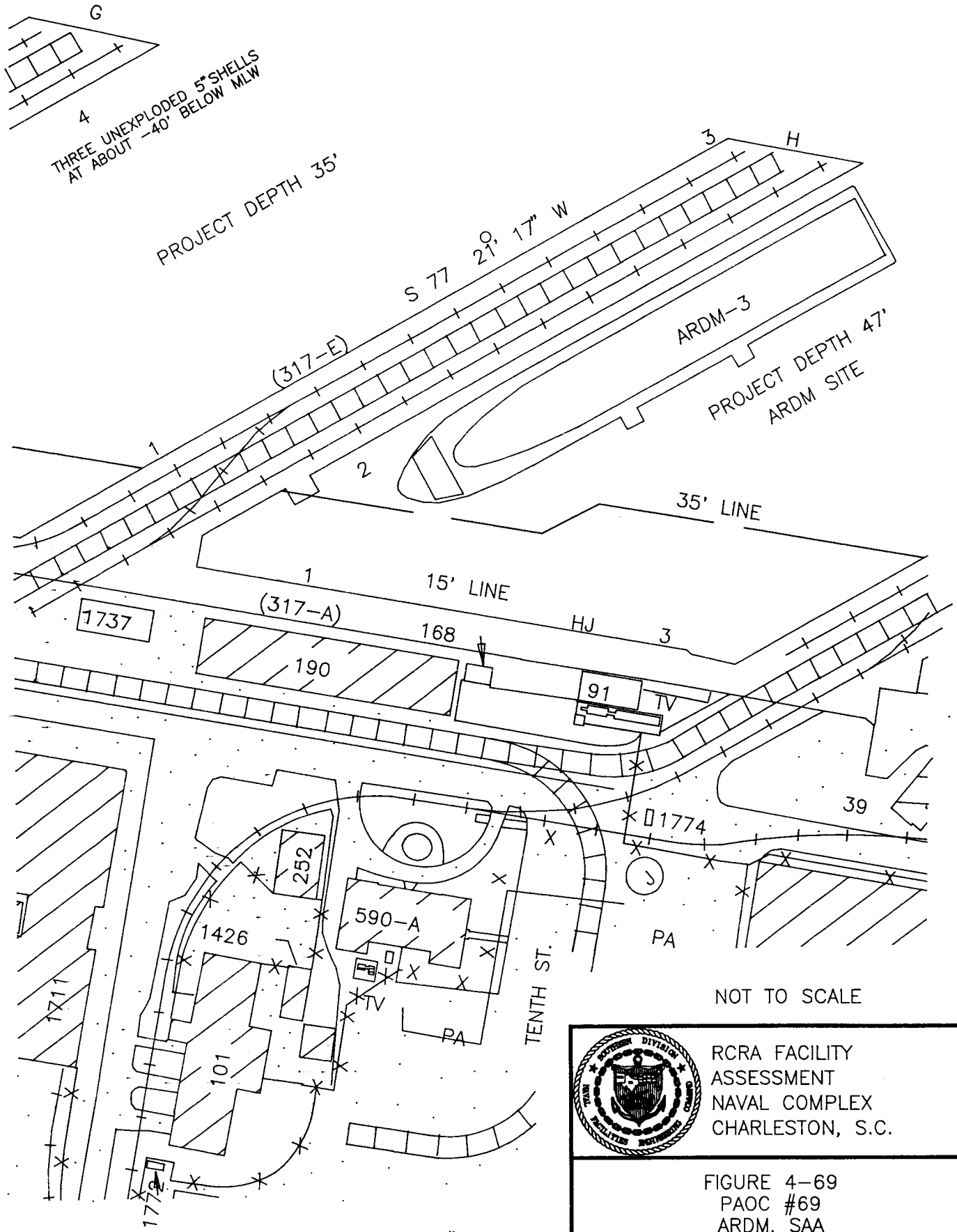

NOTE: THE EXACT LOCATION OF PAOC #114 IS NOT KNOWN.

RCRA FACILITY ASSESSMENT
NAVAL COMPLEX
CHARLESTON, S.C.

FIGURE 4-69
PAOC #69
ARDM, SAA

DWG DATE: 02/16/94 | DWG NAME: 29AOC69

4.73 PAOC #70 — Satellite Accumulation Area, Building 1518 (diver's locker)

4.73.1 Unit Characteristics

This SAA is an element of the Naval Shipyard hazardous waste management system. Hazardous wastes are accumulated at an SAA until 55 gallons of waste are accumulated [in accordance with 40 CFR 262.34(c)], then immediately transferred to a permitted hazardous waste storage facility prior to transport outside the Charleston Naval Complex for ultimate treatment or disposal. Figure 1-1 locates Building 1518 within the Complex and Figure 4-70 locates the SAA within Building 1518.

4.73.2 Waste Characteristics

Aerosol cans, contaminated waste oil, oily rags, paint-contaminated debris, oil spill residue, used diesel fuel filters, and used oil filters are stored. The major constituents of concern are volatile organic compounds, metals, and petroleum hydrocarbons.

4.73.3 Migration Pathways

Surface water is a viable migration pathway due to this unit's location near the Cooper River.

4.73.4 Evidence of Release

Sufficient information is not available to determine evidence of release.

4.73.5 Exposure Potential

This SAA is not in close proximity to any residential areas but is located very near the Cooper River.

4.73.6 Recommended Action

The Cooper River will be investigated as a separate unit and any releases from this unit would have entered the Cooper River. No further action is recommended for this PAOC.

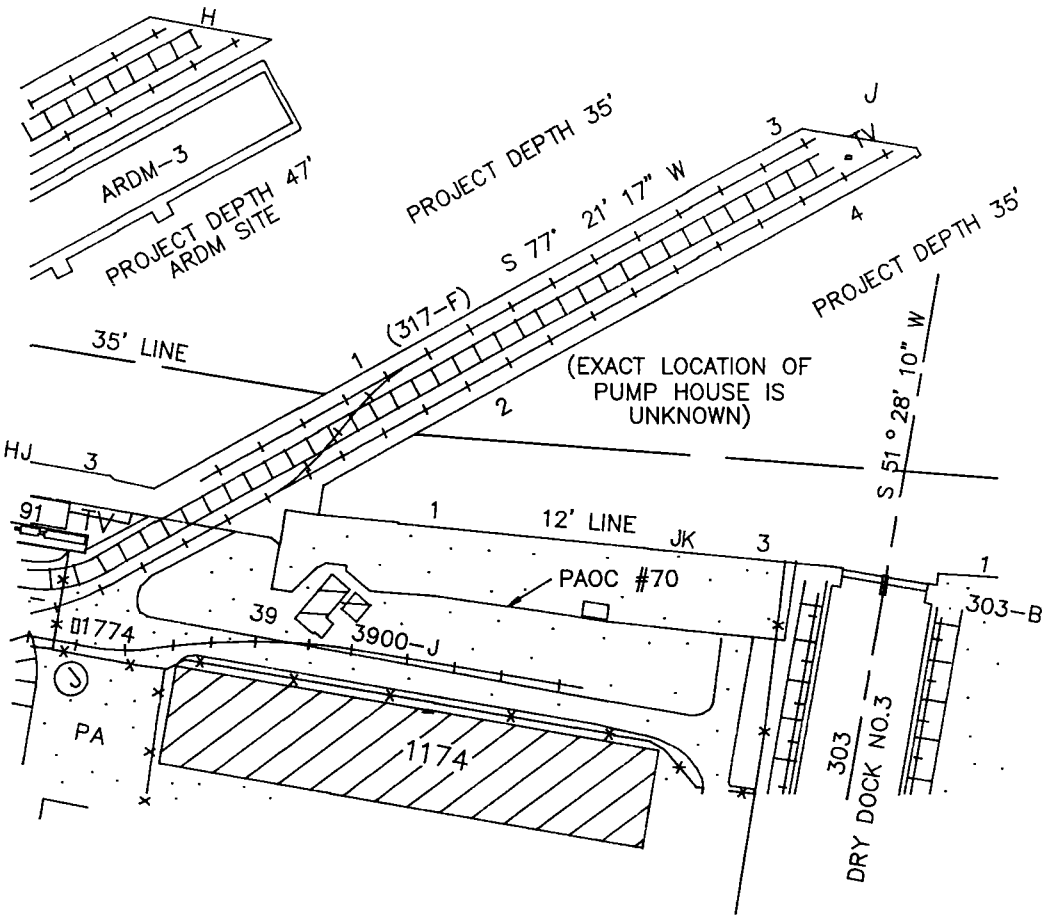

NOT TO SCALE

RCRA FACILITY
ASSESSMENT
NAVAL COMPLEX
CHARLESTON, S.C.

FIGURE 4-70
PAOC #70
PIER J, PUMP HOUSE

DWG DATE: 02/16/94 | DWG NAME: 29AOC70

4.74 PAOC #71 — Satellite Accumulation Area, Building 57

4.74.1 Unit Characteristics

This SAA is an element of the Charleston Naval Shipyard hazardous waste management system. Hazardous wastes are accumulated at an SAA until 55 gallons of waste are accumulated [in accordance with 40 CFR 262.34(c)], then immediately transferred to a permitted hazardous waste storage facility prior to transport outside the Charleston Naval Complex for ultimate treatment or disposal. Figure 1-1 locates Building 57 within the Complex.

Wastes are stored in closed 55-gallon drums, which are on pallets on a tongue-and-groove wooden floor. The SAA is a 20'x 15' area. No containment berm exists. Figure 4-71 locates the SAA within Building 57.

4.74.2 Waste Characteristics

Zinc ingots (stacked), used/unused tetrachloroethylene solvent, empty aerosol cans, used spill kits, and grease are stored. The major constituents of concern are volatile organic compounds, metals, and petroleum hydrocarbons.

4.74.3 Migration Pathways

Because the floor of the SAA is wooden, the potential for migration to soil and groundwater exists.

4.74.4 Evidence of Release

No spill reports, inspection reports, employee interviews, or visual observations indicate spills at this SAA.

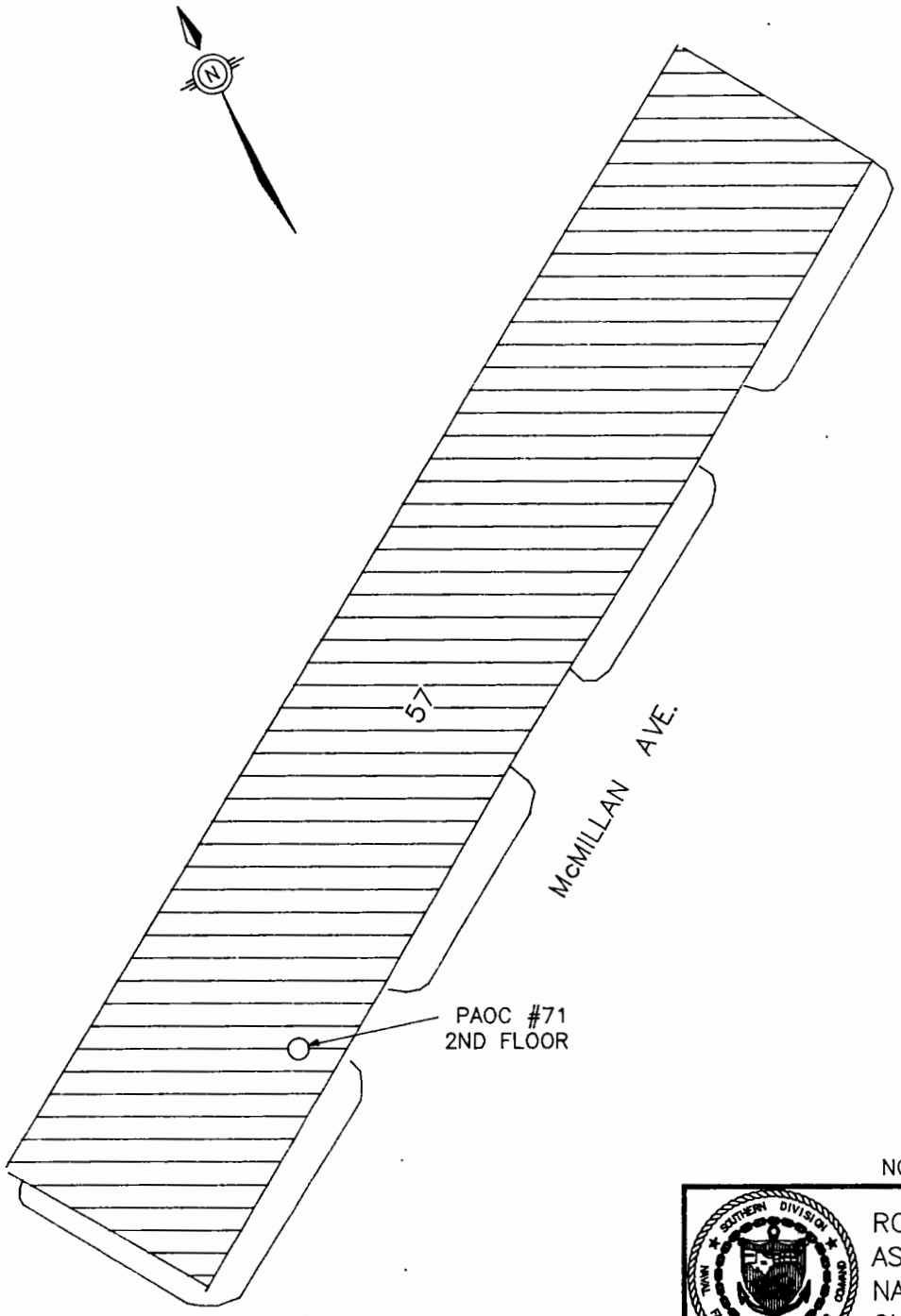

NOT TO SCALE

RCRA FACILITY
ASSESSMENT
NAVAL COMPLEX
CHARLESTON, S.C.

FIGURE 4-71
PAOC #71
BUILDING 57, SAA

DWG DATE: 02/16/94 | DWG NAME: 29AOC71

4.74.5 Exposure Potential

This SAA is not close to any residential areas. Building 57 is approximately 150 feet from the Cooper River at drydock 1. The lack of evidence of a release minimizes the likelihood of potential exposures to Complex employees.

4.74.6 Recommended Action

No further investigation of this SAA is recommended due to the lack of evidence of a release from this unit.

4.75 PAOC #72 — Satellite Accumulation Area, Building 675

4.75.1 Unit Characteristics

This SAA is an element of the Charleston Naval Shipyard hazardous waste management system. Hazardous wastes are accumulated at an SAA until 55 gallons of waste are accumulated [in accordance with 40 CFR 262.34(c)], then immediately transferred to a permitted hazardous waste storage facility prior to transport outside the Charleston Naval Complex for ultimate treatment or disposal. Figure 1-2 locates Building 675 within the Complex. Building 675 is not highlighted on Figure 1-2; it is located at coordinates H-14.

Wastes are stored in 5-gallon closed plastic containers. The floor surface is floor tile over concrete. No containment berm exists. The SAA is a 3'x 3' area. Figure 4-72 locates the SAA within Building 675.

4.75.2 Waste Characteristics

Silver-bearing fixer for x-ray photography is stored.

4.75.3 Migration Pathways

Because this SAA is located inside Building 675, soil, groundwater, and surface waters are unlikely pathways. The floor in the vicinity of this SAA is free of cracks.

4.75.4 Evidence of Release

No spill reports, inspection reports, employee interviews, or visual observations indicate spills at this SAA.

4.75.5 Exposure Potential

This SAA is not close to any residential areas. Wetlands exist approximately 1800 feet from Building 675. The design features of the unit and lack of evidence of a release minimize the likelihood of potential exposures to Complex employees.

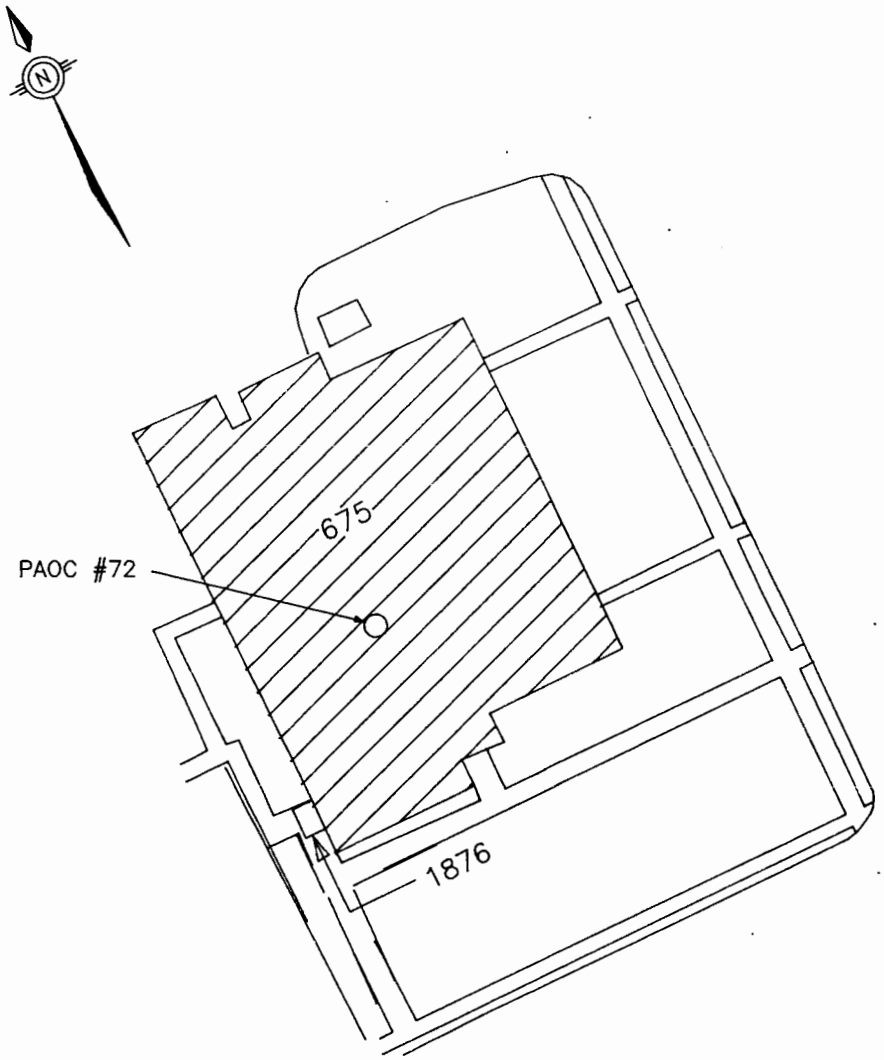

NOT TO SCALE

RCRA FACILITY
ASSESSMENT
NAVAL COMPLEX
CHARLESTON, S.C.

FIGURE 4-72
PAOC #72
BUILDING 675, SAA

DWG DATE: 02/16/94 | DWG NAME: 29AOC72

4.75.6 Recommended Action

No further investigation of this SAA is recommended due to the storage practices, lack of evidence of a release from this unit, and limited migration pathways.

4.76 PAOC #73 — Less-Than-90-Day Accumulation Area, Building 9

4.76.1 Unit Characteristics

This less-than-90-day Accumulation Area (AA) is an element of the Naval Shipyard hazardous waste management system. Hazardous wastes are accumulated at an AA for less than 90 days, then transferred to a permitted hazardous waste storage facility prior to transport outside the Charleston Naval Complex for ultimate treatment or disposal. Figure 1-1 locates Building 9 within the Complex.

Wastes are stored in closed 55-gallon drums, which are on pallets on a concrete floor. The drums are in a shed. The SAA is approximately 15'x 100'. Figure 4-73 locates the AA near Building 9.

4.76.2 Waste Characteristics

Empty paint and aerosol cans, used paint rollers and brushes, liquid and thinner paint waste, 1-quart oil cans, oily rags, oil spill residue, and a spill kit are stored. The major constituents of concern are volatile organic compounds, metals, and petroleum hydrocarbons.

4.76.3 Migration Pathways

Because this AA is located in a shed with a concrete floor, soil, groundwater, and surface water are unlikely migration pathways.

4.76.4 Evidence of Release

A Hazardous Waste Storage Area Inspection Report states that on December 11, 1991, a bag of waste was leaking at PAOC #73. The leaking bag was subsequently secured, the area was cleaned, and the waste disposed of properly.

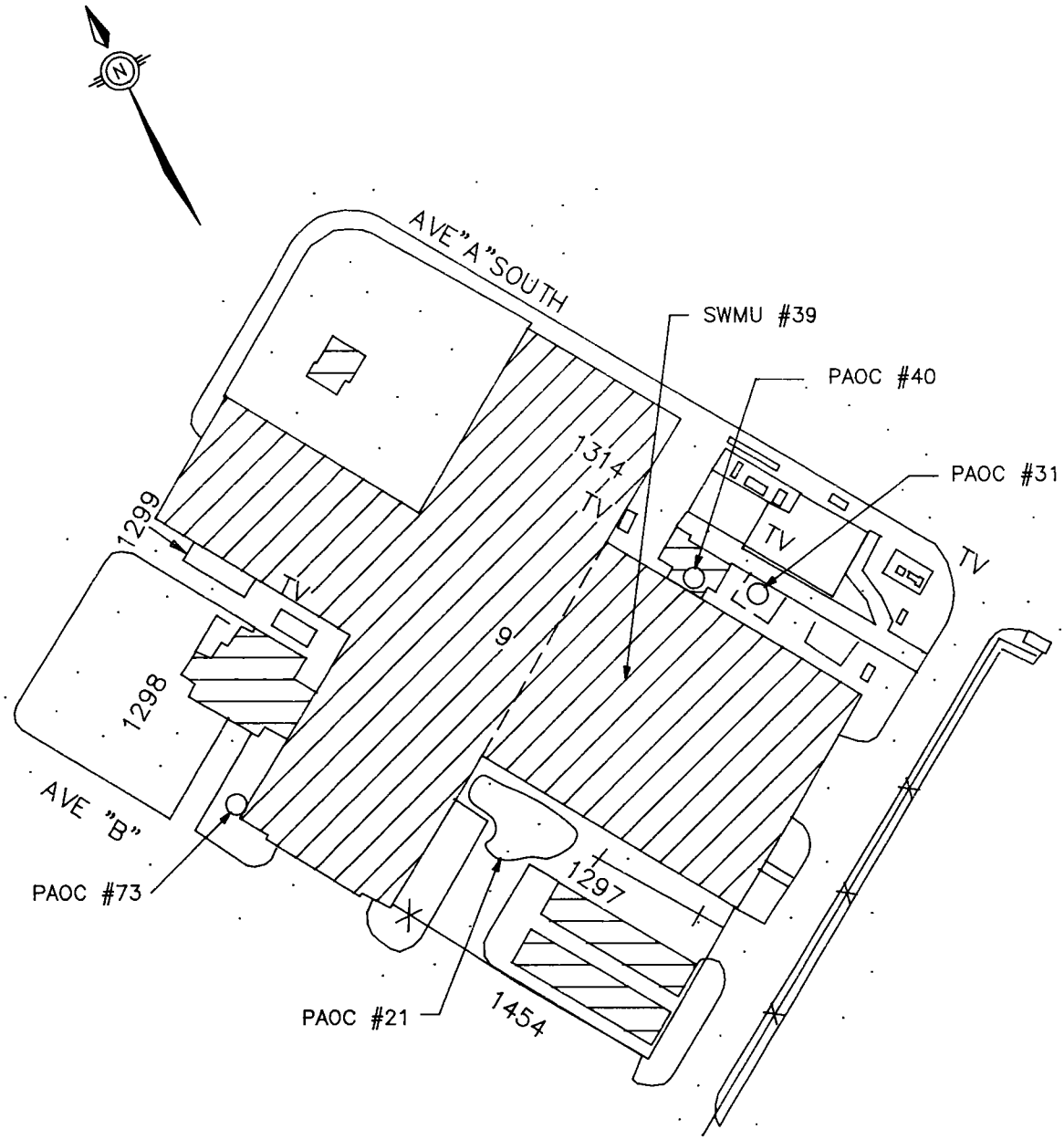

NOT TO SCALE

RCRA FACILITY
ASSESSMENT
NAVAL COMPLEX
CHARLESTON, S.C.

FIGURE 4-73
PAOC #73
BUILDING 9, SAA

DWG DATE: 02/16/94 | DWG NAME: 29AOC73

4.76.5 Exposure Potential

This AA is not close to any residential areas. Building 9 is approximately 250 feet from the Cooper River at drydock 2. The design features of the unit lack of evidence of a release minimize the likelihood of potential exposures to Complex employees.

4.76.6 Recommended Action

No further investigation of this AA is recommended due to the storage practices and limited migration pathways.

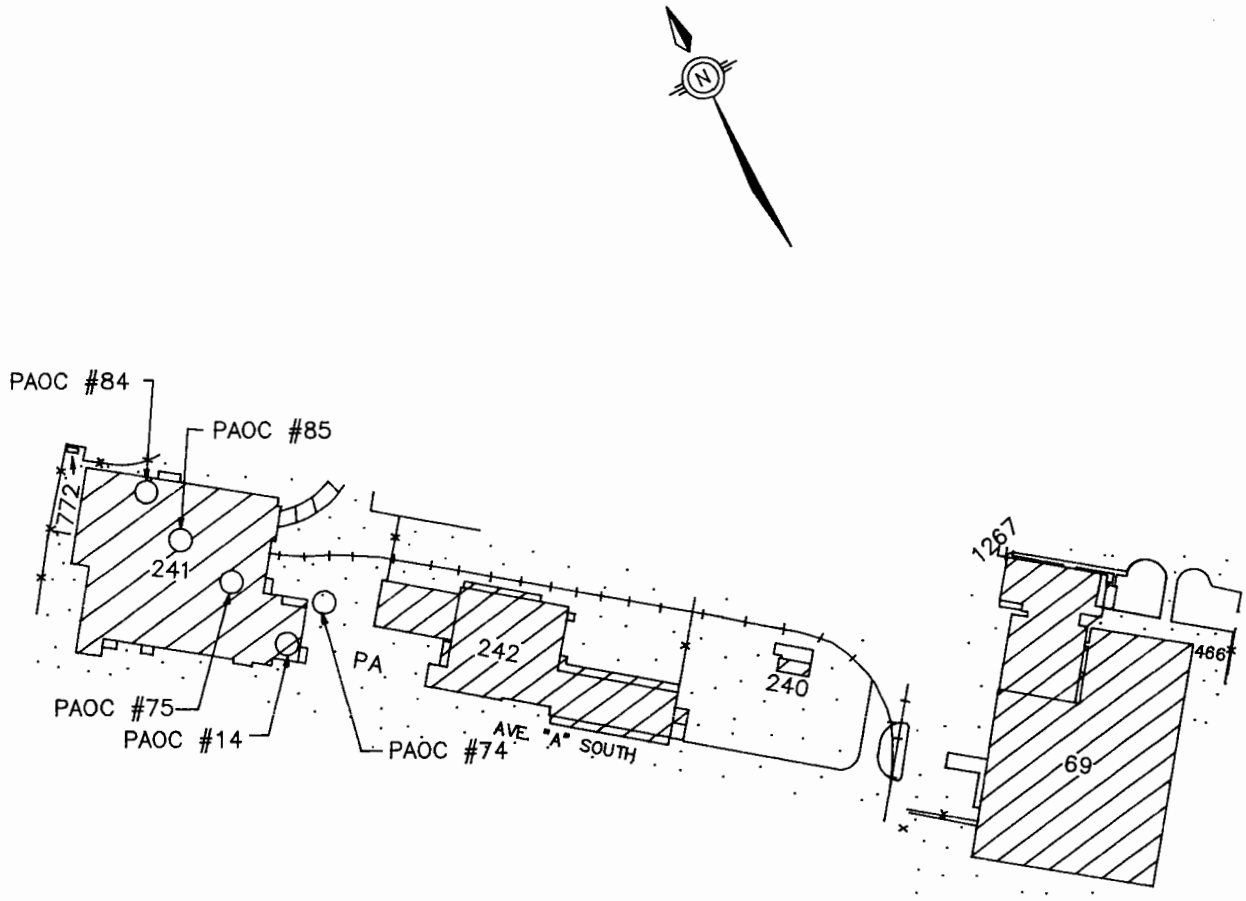

NOT TO SCALE

RCRA FACILITY
ASSESSMENT
NAVAL COMPLEX
CHARLESTON, S.C.

FIGURE 4-74
PAOC #74
BUILDING 241, SAA

DWG DATE: 02/16/94 | DWG NAME: 29AOC74

4.77.6 Recommended Action

No further investigation of this SAA is recommended due to the nature of the waste, storage practices, lack of evidence of a release from this unit, and limited migration pathways.

4.78 PAOC #75 — Satellite Accumulation Area, Building 241

4.78.1 Unit Characteristics

This SAA is an element of the Charleston Naval Shipyard hazardous waste management system. Hazardous wastes are accumulated at an SAA until 55 gallons of waste are accumulated [in accordance with 40 CFR 262.34(c)], then immediately transferred to a permitted hazardous waste storage facility prior to transport outside the Charleston Naval Complex for ultimate treatment or disposal. Figure 1-1 locates Building 241 within the Complex.

PAOC #75 is no longer operational. The floor where PAOC #75 used to operate is floor tile over concrete. Figure 4-75 locates Building 241 within the Naval Complex.

4.78.2 Waste Characteristics

Empty paint cans, paint-contaminated debris, and liquid paint waste were stored at this SAA. The major constituents of concern are volatile organic compounds and metals.

4.78.3 Migration Pathways

Because this SAA is located inside Building 241, soil, groundwater, and surface waters are unlikely pathways. The floor in the vicinity of this SAA is free of cracks.

4.78.4 Evidence of Release

No spill reports, inspection reports, employee interviews, or visual observations indicate spills at this SAA.

4.78.5 Exposure Potential

This SAA is not close to any residential areas. The Cooper River is approximately 1400 feet from Building 241. Because this SAA is no longer operational, and there is no evidence of a release, potential exposures to Complex employees is minimal.

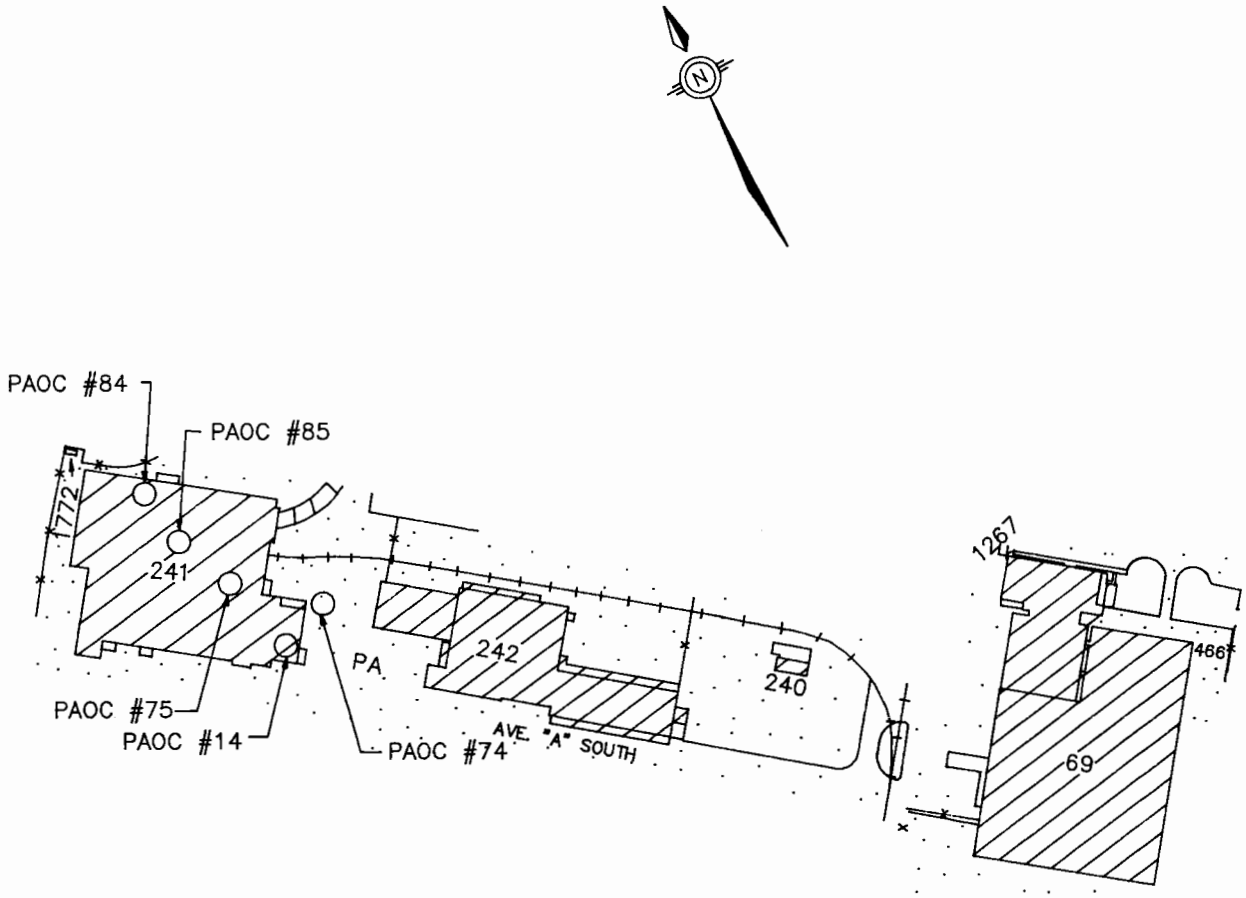

NOT TO SCALE

RCRA FACILITY
ASSESSMENT
NAVAL COMPLEX
CHARLESTON, S.C.

FIGURE 4-75
PAOC #75
BUILDING 241, SAA

DWG DATE: 02/16/94 | DWG NAME: 29AOC75

4.78.6 Recommended Action

This SAA is no longer operational. Per 40 CFR 262.34(a)(1), certification of closure is required in accordance with 40 CFR 265.111 and 114.

4.79 PAOC #76 — Less-Than-90-Day Storage Area, Building 13

4.79.1 Unit Characteristics

This a less-than-90-day Accumulation Area (AA) is an element of the Naval Shipyard hazardous waste management system. Hazardous wastes are accumulated at an AA for less than 90 days, then transferred to a permitted hazardous waste storage facility prior to transport outside the Charleston Naval Complex for ultimate treatment or disposal. Figure 1-1 locates Building 13 within the Complex.

Wastes are stored in 55-gallon drums and plastic bags on an asphalt surface. No containment berms exist. The drums and plastic bags are in a 14' x 20' metal cage. Figure 4-76 locates the AA near Building 13.

4.79.2 Waste characteristics

Empty paint cans and waste oil from analysis are stored. The major constituents of concern are volatile organic compounds, metals, and petroleum hydrocarbons.

4.79.3 Migration Pathways

This AA is located outside of Building 13; therefore, surface migration from surface runoff may occur. The floor in the vicinity of the AA is free of cracks, protecting the underlying soil and groundwater.

4.79.4 Evidence of Release

No spill reports, inspection reports, employee interviews, or visual observations indicate spills at this AA.

4.79.5 Exposure Potential

This AA is not close to any residential areas. Building 13 is approximately 400 feet from the Cooper River at drydock 5. The location inside a restricted access industrial area, the design

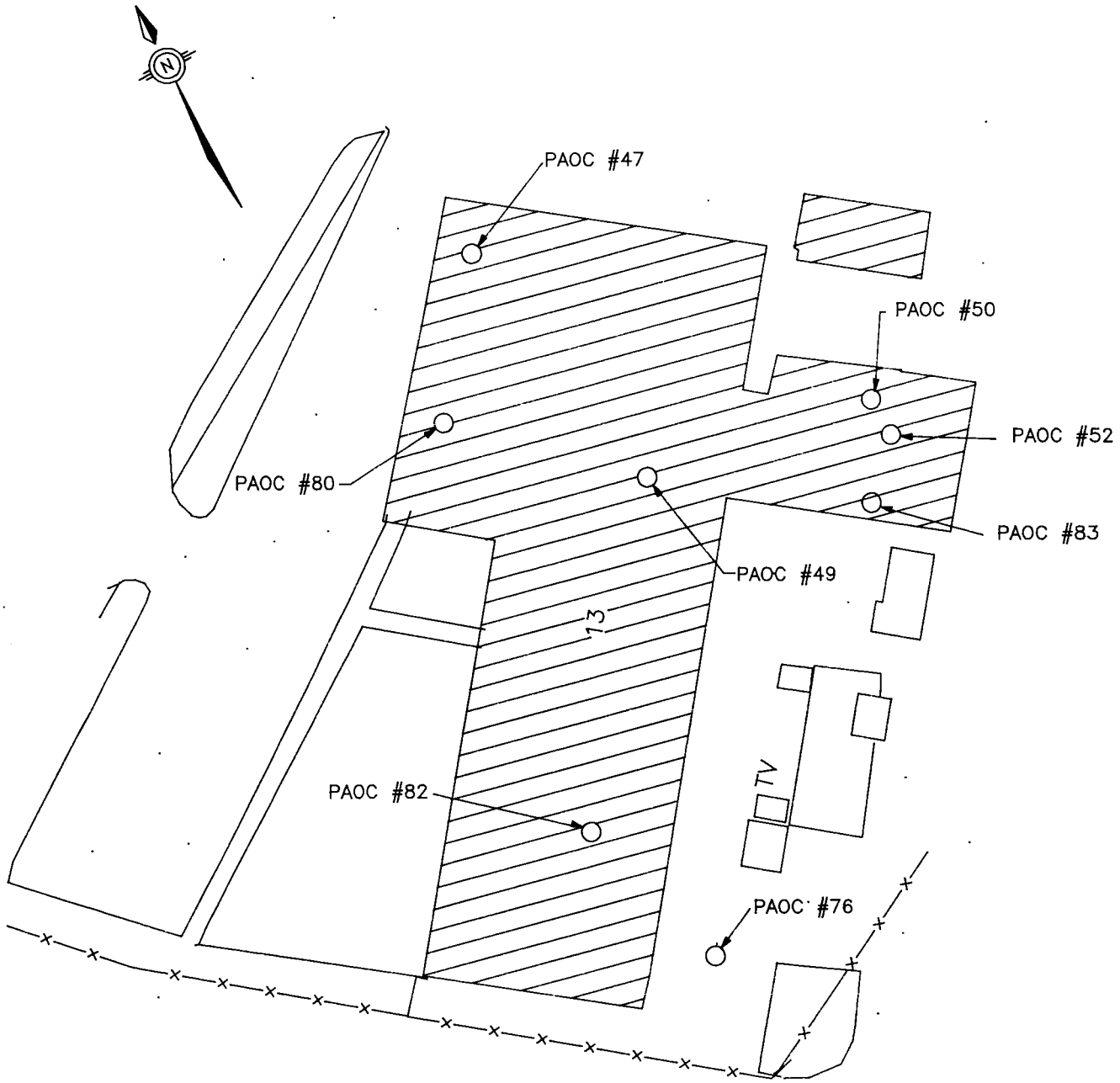

NOT TO SCALE

RCRA FACILITY
ASSESSMENT
NAVAL COMPLEX
CHARLESTON, S.C.

FIGURE 4-76
PAOC #76
BUILDING 13, SAA

DWG DATE: 02/16/94 | DWG NAME: 29AOC76

features of the unit, and lack of evidence of a release minimize the likelihood of potential exposures to Complex employees.

4.79.6 Recommended Action

No further investigation of this SAA is recommended due to the storage practices, lack of evidence of a release from this unit, and limited migration pathways.

4.80 PAOC #77 - Satellite Accumulation Area, Building 202

4.80.1 Unit Characteristics

This SAA is an element of the Charleston Naval Shipyard hazardous waste management system. Hazardous wastes are accumulated at an SAA until 55 gallons of waste are accumulated [in accordance with 40 CFR 262.34(c)], then immediately transferred to a permitted hazardous waste storage facility prior to transport outside the Charleston Naval Complex for ultimate treatment or disposal. Figure 1-2 locates Building 202 within the Complex.

Wastes are stored in closed 5-gallon plastic containers, which are in a drip pan. The floor surface is floor tile over concrete. Figure 4-77 locates the SAA in Building 202.

4.80.2 Waste Characteristics

Mercuric nitrate waste is stored.

4.80.3 Migration Pathways

Because this SAA is located inside Building 202, soil, groundwater, and surface waters are unlikely pathways. The floor in the vicinity of this SAA is free of cracks.

4.80.4 Evidence of Release

No spill reports, inspection reports, employee interviews, or visual observations indicate spills at this SAA.

4.80.5 Exposure Potential

This SAA is not close to any residential areas. The Cooper River is located approximately 1500 feet from Building 202. The design features of the unit and lack of evidence of a release minimize the likelihood of potential exposures to Complex employees.

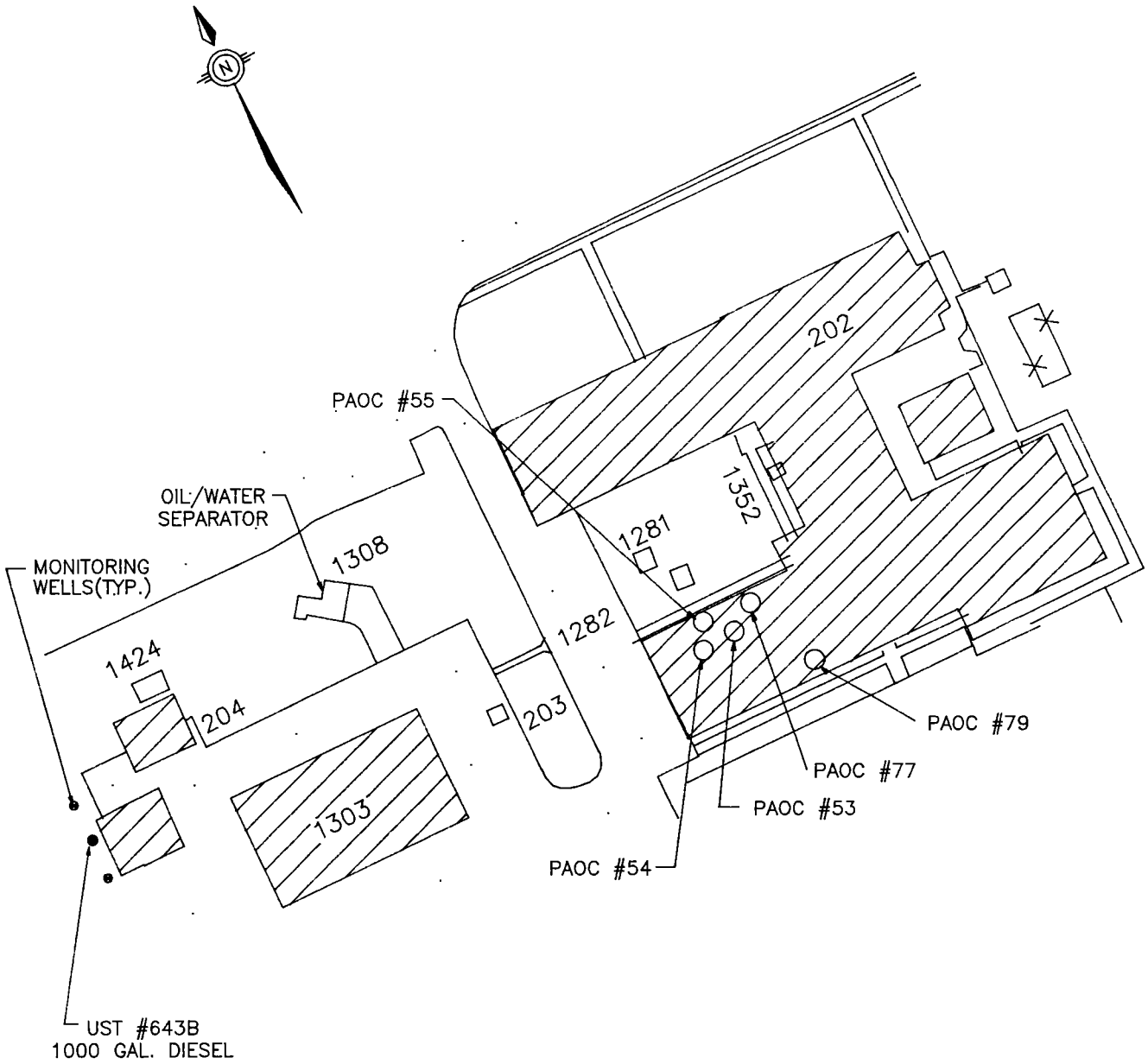

NOT TO SCALE

RCRA FACILITY
ASSESSMENT
NAVAL COMPLEX
CHARLESTON, S.C.

FIGURE 4-77
PAOC #77
BUILDING 202, SAA

DWG DATE: 02/16/94 | DWG NAME: 29AOC77

4.80.6 Recommended Action

No further investigation of this SAA is recommended due to the storage practices, lack of evidence of a release from this unit, and limited migration pathways.

4.81 PAOC #78 - Satellite Accumulation Area, Building 202

4.81.1 Unit Characteristics

This SAA is an element of the Charleston Naval Shipyard hazardous waste management system. Hazardous wastes are accumulated at an SAA until 55 gallons of waste are accumulated [in accordance with 40 CFR 262.34(c)], then immediately transferred to a permitted hazardous waste storage facility prior to transport outside the Charleston Naval Complex for ultimate treatment or disposal. Figure 1-2 locates Building 202 within the Complex.

Wastes are stored in a closed 55-gallon drum, which is on a pallet. The floor surface is asphalt. Figure 4-78 locates the SAA in Building 202.

4.81.2 Waste characteristics

Spent oxygen breathing apparatus canisters are stored.

4.81.3 Migration Pathways

This SAA is located outside of Building 202; therefore, surface migration from surface runoff may occur. The floor in the vicinity of the SAA is free of cracks, protecting the underlying soil and groundwater.

4.81.4 Evidence of Release

No spill reports, inspection reports, employee interviews, or visual observations indicate spills at this SAA.

4.81.5 Exposure Potential

This SAA is not close to any residential areas. The Cooper River is located approximately 1500 feet from Building 202. The design features of the unit and lack of evidence of a release minimize the likelihood of potential exposures to Complex employees.

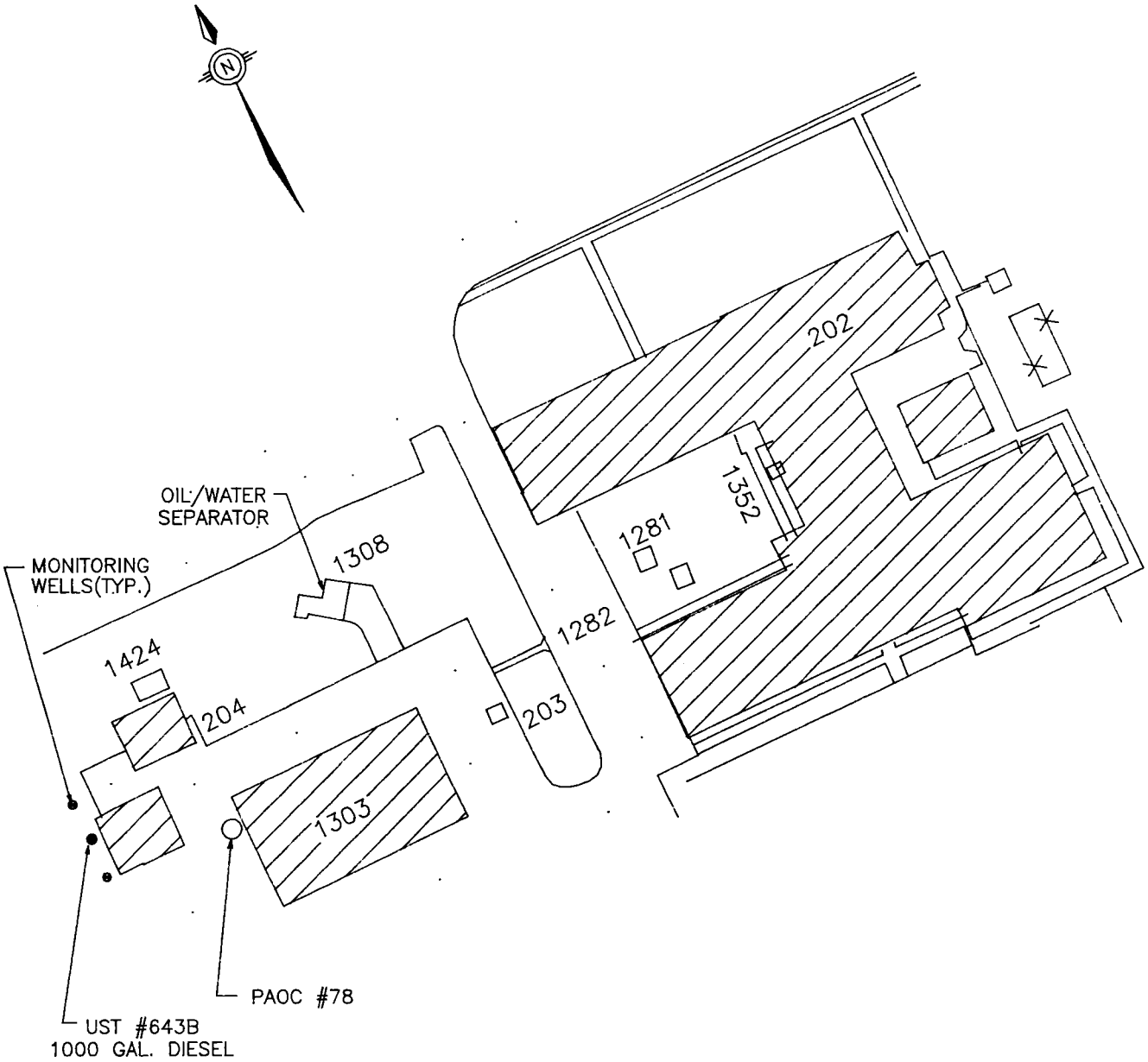

NOT TO SCALE

RCRA FACILITY
ASSESSMENT
NAVAL COMPLEX
CHARLESTON, S.C.

FIGURE 4-78
PAOC #78
BUILDING 1303, SAA

DWG DATE: 02/16/94 | DWG NAME: 29AOC78

4.81.6 Recommended Action

No further investigation of this SAA is recommended due to the nature of the waste (i.e. canisters), storage practices, lack of evidence of a release from this unit, and limited migration pathways.

4.82 PAOC #79 - Satellite Accumulation Area, Building 202

4.82.1 Unit Characteristics

This SAA is an element of the Charleston Naval Shipyard hazardous waste management system. Hazardous wastes are accumulated at an SAA until 55 gallons of waste are accumulated [in accordance with 40 CFR 262.34(c)], then immediately transferred to a permitted hazardous waste storage facility prior to transport outside the Charleston Naval Complex for ultimate treatment or disposal. Figure 1-2 locates Building 202 within the Complex.

Wastes are stored in closed plastic containers, which are in a drip pan. The floor surface is floor tile over concrete. Figure 4-79 locates the SAA in Building 202.

4.82.2 Waste Characteristics

Waste oil from analyses is stored. The major constituents of concern are petroleum hydrocarbons.

4.82.3 Migration Pathways

Because this SAA is located inside Building 202, soil, groundwater, and surface waters are unlikely pathways. The floor in the vicinity of this SAA is free of cracks.

4.82.4 Evidence of Release

No spill reports, inspection reports, employee interviews, or visual observations indicate spills at this SAA.

4.82.5 Exposure Potential

This SAA is not close to any residential areas. The Cooper River is located approximately 1500 feet from Building 202. The design features of the unit and lack of evidence of a release minimize the likelihood of potential exposures to Complex employees.

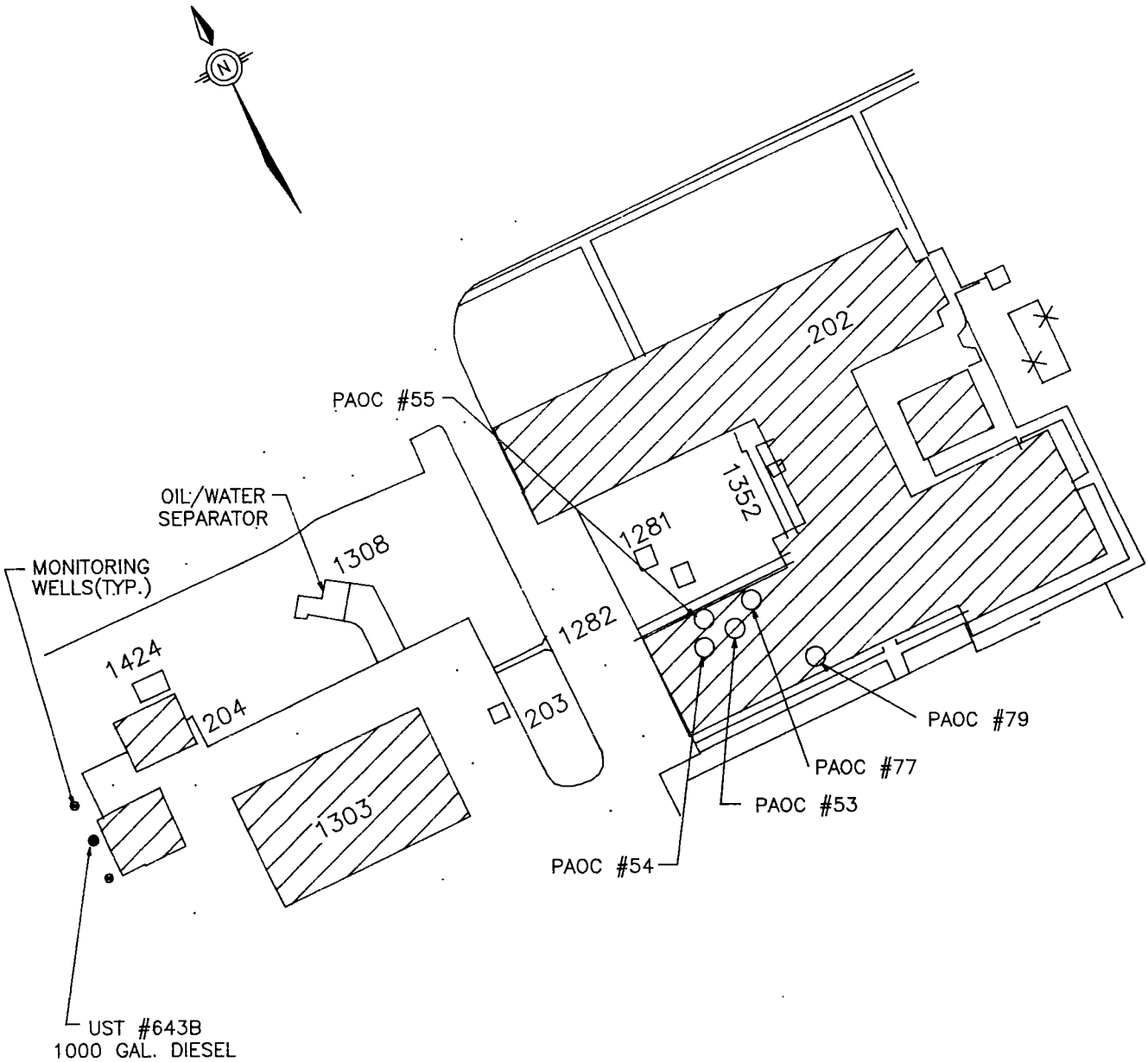

NOT TO SCALE

RCRA FACILITY
ASSESSMENT
NAVAL COMPLEX
CHARLESTON, S.C.

FIGURE 4-79
PAOC #79
BUILDING 202, SAA

DWG DATE: 02/16/94 | DWG NAME: 29AOC79

4.82.6 Recommended Action

No further investigation of this SAA is recommended due to the storage practices, lack of evidence of a release from this unit, and limited migration pathways.

4.83 PAOC #80 - Satellite Accumulation Area, Building 13

4.83.1 Unit Characteristics

This SAA is an element of the Charleston Naval Shipyard hazardous waste management system. Hazardous wastes are accumulated at an SAA until 55 gallons of waste are accumulated [in accordance with 40 CFR 262.34(c)], then immediately transferred to a permitted hazardous waste storage facility prior to transport outside the Charleston Naval Complex for ultimate treatment or disposal. The SAA began operation in August 1991. Figure 1-1 locates Building 13 within the Complex.

Wastes are stored in 15-gallon containers. Figure 4-80 locates the SAA within Building 13.

4.83.2 Waste Characteristics

Kodak fixer solution is stored.

4.83.3 Migration Pathways

Because this SAA is located inside Building 13, soil, groundwater, and surface waters are unlikely pathways. The floor in the vicinity of this SAA is free of cracks.

4.83.4 Evidence of Release

No spill reports, inspection reports, employee interviews, or visual observations indicate spills at this SAA.

4.83.5 Exposure Potential

This SAA is not close to any residential areas. Building 13 is approximately 400 feet from the Cooper River at drydock 5. The design features of the unit and lack of evidence of a release minimize the likelihood of potential exposures to Complex employees.

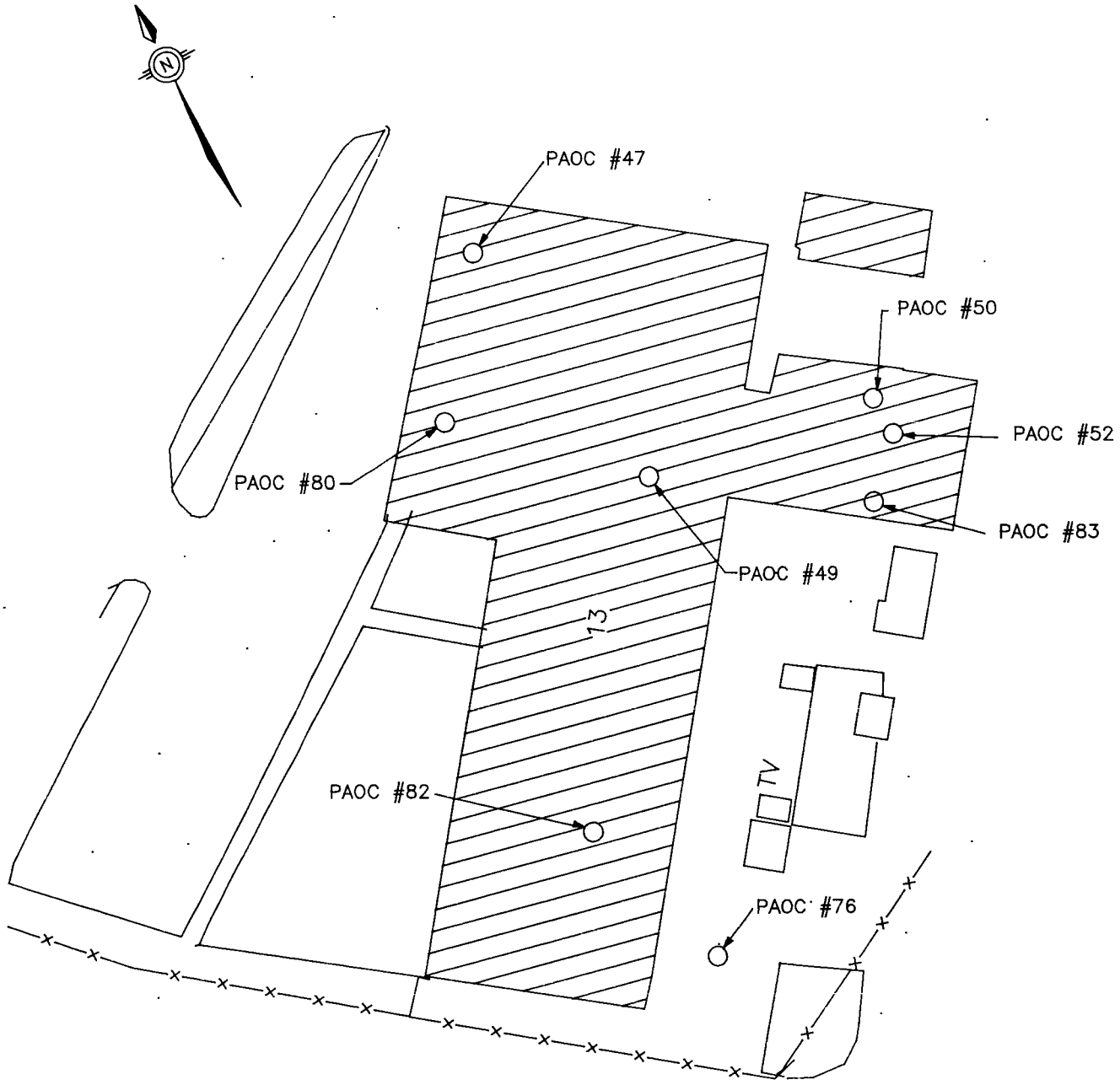

NOT TO SCALE

RCRA FACILITY
ASSESSMENT
NAVAL COMPLEX
CHARLESTON, S.C.

FIGURE 4-80
PAOC #80
BUILDING 13, SAA

DWG DATE: 02/16/94 | DWG NAME: 29AOC80

4.83.6 Recommended Action

No further investigation of this SAA is recommended due to the storage practices, lack of evidence of a release from this unit, and limited migration pathways.

4.84 PAOC #81 — Satellite Accumulation Area, Building 242

4.84.1 Unit Characteristics

This SAA is an element of the Charleston Naval Shipyard hazardous waste management system. Hazardous wastes are accumulated at an SAA until 55 gallons of waste are accumulated [in accordance with 40 CFR 262.34(c)], then immediately transferred to a permitted hazardous waste storage facility prior to transport outside the Charleston Naval Complex for ultimate treatment or disposal. Figure 1-1 locates Building 242 within the Complex.

Wastes are stored in closed 55-gallon drums, which are on pallets. The drums are in a 8'x 16' shed with a concrete floor. No containment berm exists. Figure 4-81 locates the SAA near Building 242.

4.84.2 Waste Characteristics

Oily rags, oil spill residue, and used oil filters are stored at this SAA. The major constituents of concern are petroleum hydrocarbons.

4.84.3 Migration Pathways

This SAA is located inside a metal shed, soil, groundwater, and surface waters are unlikely pathways. The floor of the shed is free of cracks, protecting the underlying soil and groundwater.

4.84.4 Evidence of Release

No spill reports, inspection reports, employee interviews, or visual observations indicate spills at this SAA.

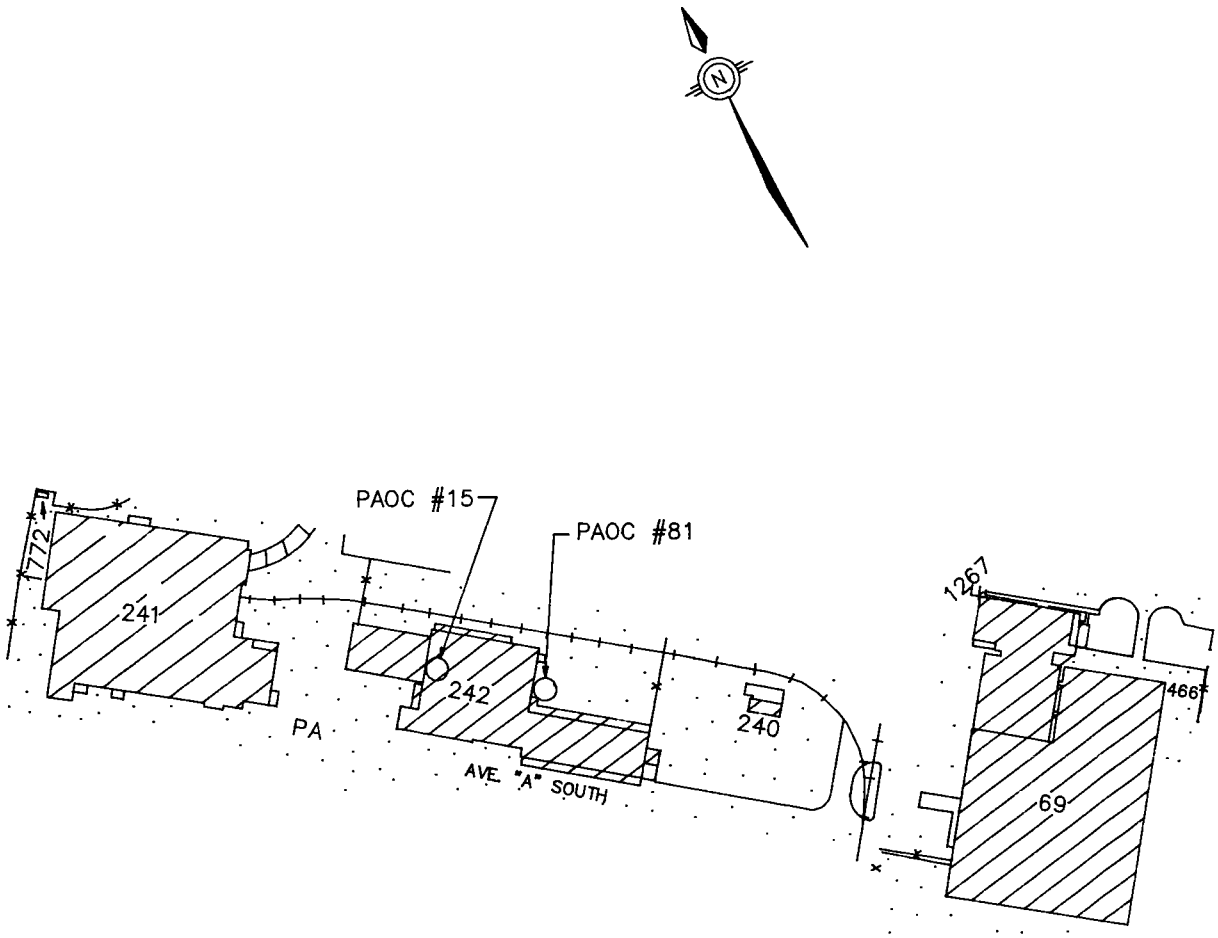

NOT TO SCALE

RCRA FACILITY
ASSESSMENT
NAVAL COMPLEX
CHARLESTON, S.C.

FIGURE 4-81
PAOC #81
BUILDING 242, SAA

DWG DATE: 02/16/94 | DWG NAME: 29AOC81

4.84.5 Exposure Potential

This SAA is not close to any residential areas or sensitive environments. The limited storage capacity and nature of waste minimizes the potential exposures to complex employees.

4.84.6 Recommended Action

No further investigation of this SAA is recommended due to the nature of the waste (solid waste in drums containerized with very little liquid), storage practices, lack of evidence of a release from this unit, and limited migration pathways.

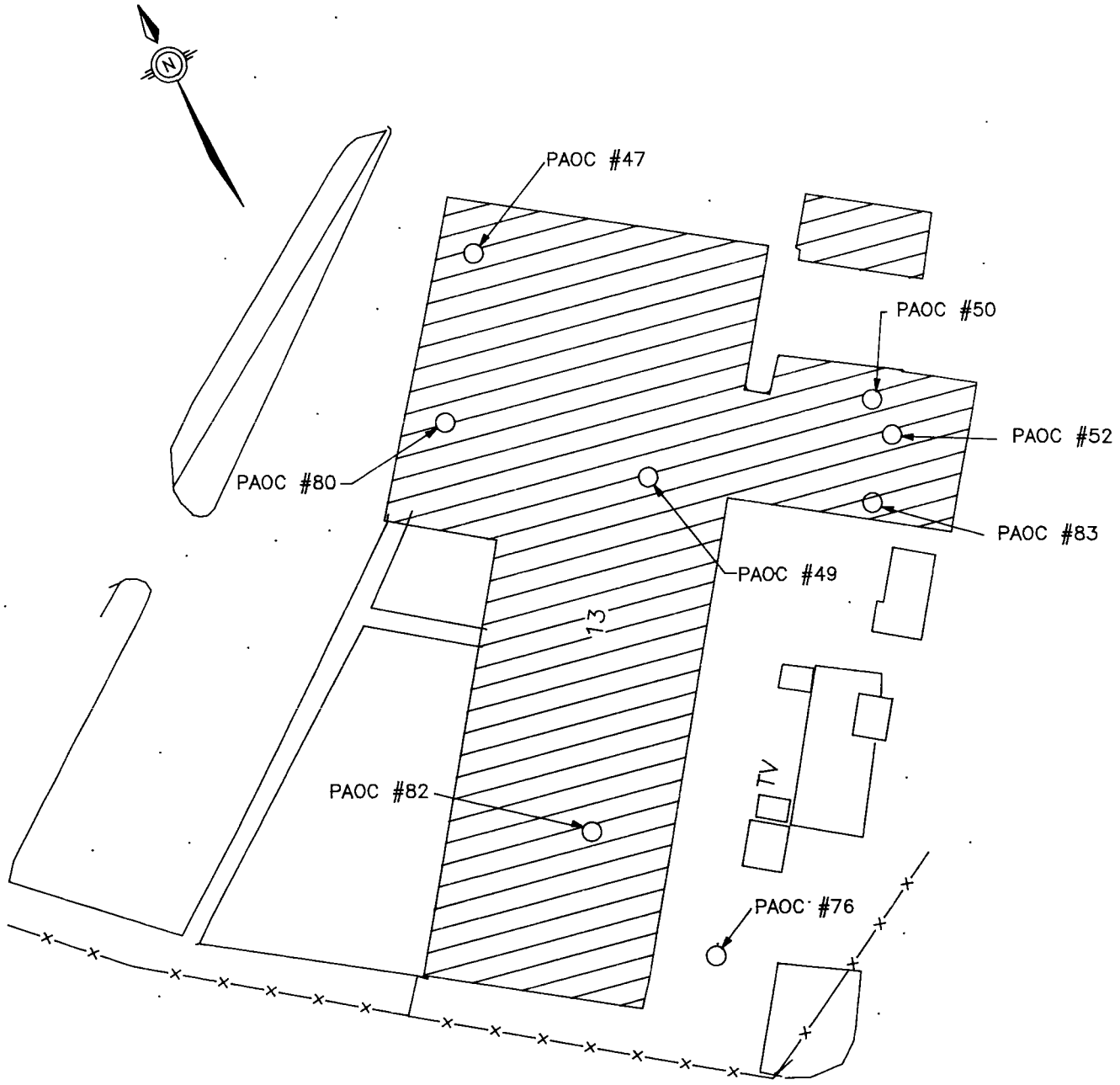

NOT TO SCALE

RCRA FACILITY
ASSESSMENT
NAVAL COMPLEX
CHARLESTON, S.C.

FIGURE 4-82
PAOC #82
BUILDING 13, SAA

DWG DATE: 02/16/94 | DWG NAME: 29AOC82

4.85.6 Recommended Action

No further investigation of this SAA is recommended due to the storage practices, lack of evidence of a release from this unit, and limited migration pathways.

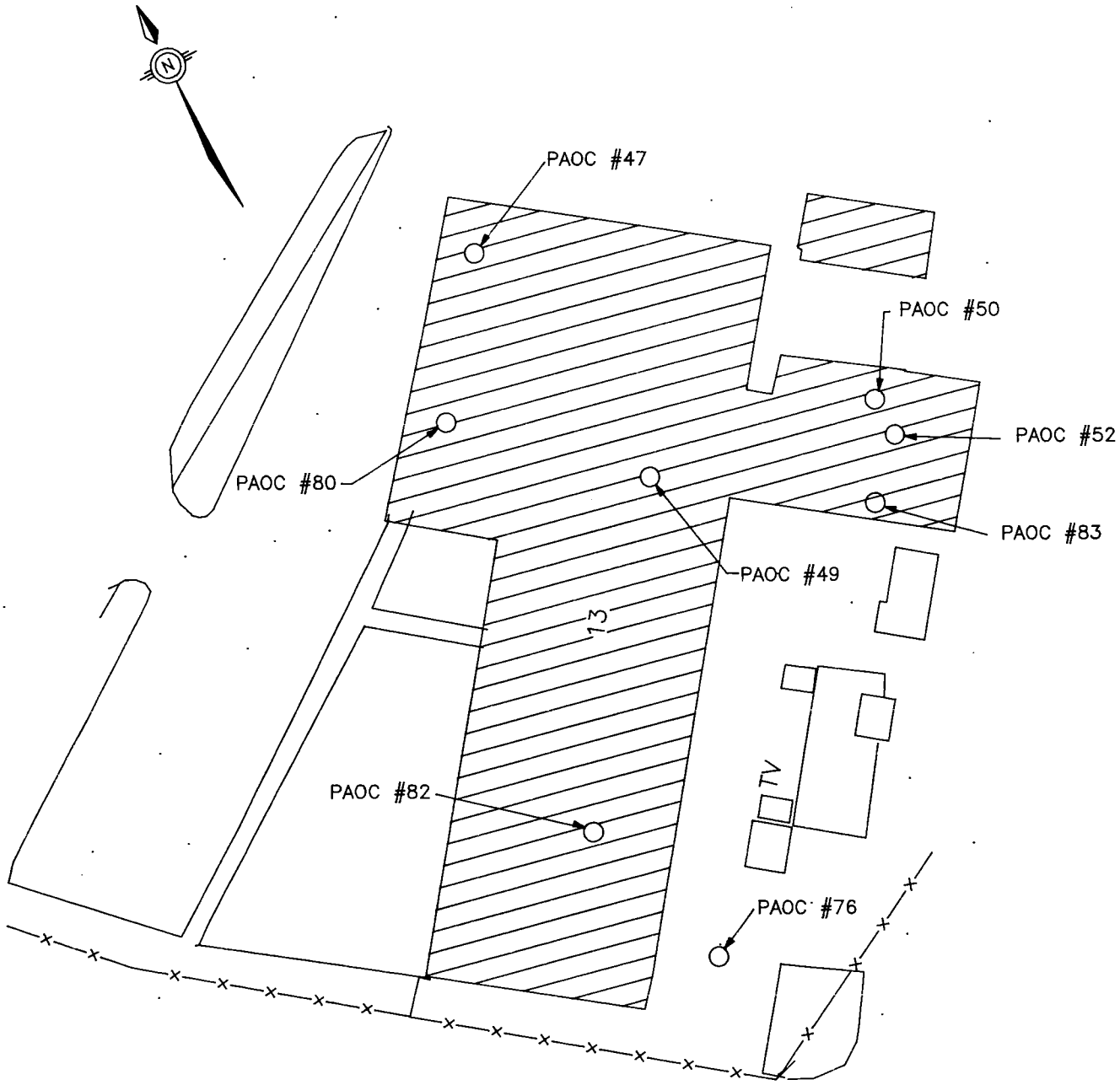

NOT TO SCALE

RCRA FACILITY
ASSESSMENT
NAVAL COMPLEX
CHARLESTON, S.C.

FIGURE 4-83
PAOC #83
BUILDING 13, SAA

DWG DATE: 02/16/94 | DWG NAME: 29AOC83

capacity and lack of evidence of a major release minimize the potential exposure to Complex employees.

4.86.6 Recommended Action

No further investigation of this SAA is recommended due to the storage practices, lack of evidence of a release from this unit, and limited migration pathways.

4.87 PAOC #84 — Satellite Accumulation Area, Building 241

4.87.1 Unit Characteristics

This SAA is an element of the Charleston Naval Shipyard hazardous waste management system. Hazardous wastes are accumulated at an SAA until 55 gallons of waste are accumulated [in accordance with 40 CFR 262.34(c)], then immediately transferred to a permitted hazardous waste storage facility prior to transport outside the Charleston Naval Complex for ultimate treatment or disposal. Figure 1-1 locates Building 241 within the Complex.

Wastes are stored in closed 55-gallon drums, which are on pallets. The floor surface is floor tile over concrete. No containment berm exists. Figure 4-84 locates the SAA within Building 241.

4.87.2 Waste Characteristics

Fifty-five-gallon drums of empty paint and spot check cans, empty anti-freeze containers, plastic and cloth gloves, coveralls, and oily rags are stored at this SAA. The major constituents of concern are volatile organic compounds, metals, and petroleum hydrocarbons.

4.87.3 Migration Pathways

Because this SAA is located inside Building 241, soil, groundwater, and surface waters are unlikely pathways. The floor in the vicinity of this SAA is free of cracks.

4.87.4 Evidence of Release

No spill reports, inspection reports, employee interviews, or visual observations indicate spills at this SAA.

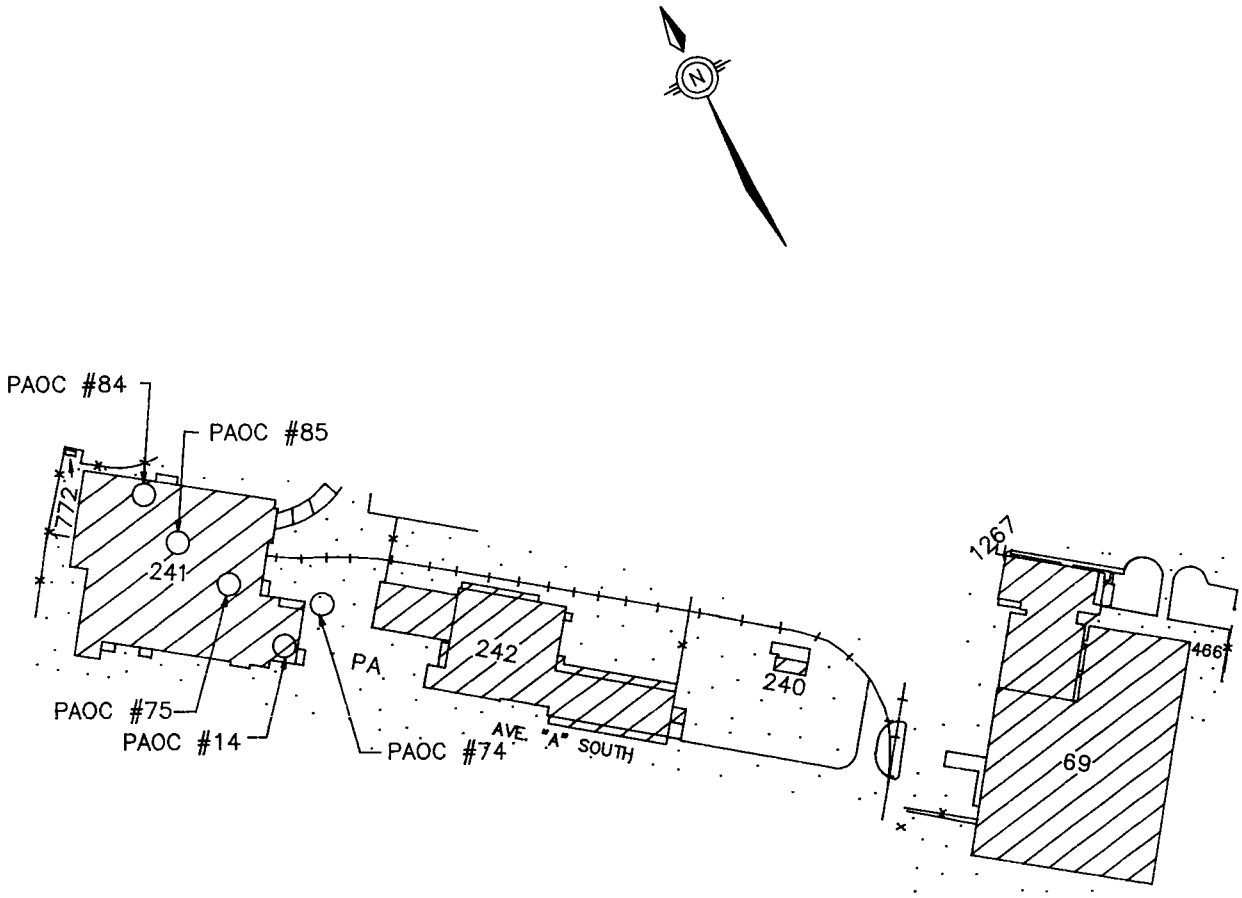

NOT TO SCALE

RCRA FACILITY
ASSESSMENT
NAVAL COMPLEX
CHARLESTON, S.C.

FIGURE 4-84
PAOC #84
BUILDING 241, SAA

DWG DATE: 02/16/94 | DWG NAME: 29AOC84

4.87.5 Exposure Potential

This SAA is not close to any residential areas or sensitive environments. The limited storage capacity and nature of waste minimize potential exposures to Complex employees.

4.87.6 Recommended Action

No further investigation of this SAA is recommended due to the nature of the waste (solid waste with very little liquid content), storage practices, lack of evidence of a release from this unit, and limited migration pathways.

4.88 PAOC #85 — Satellite Accumulation Area, Building 241

4.88.1 Unit Characteristics

This SAA is an element of the Charleston Naval Shipyard hazardous waste management system. Hazardous wastes are accumulated at an SAA until 55 gallons of waste are accumulated [in accordance with 40 CFR 262.34(c)], then immediately transferred to a permitted hazardous waste storage facility prior to transport outside the Charleston Naval Complex for ultimate treatment or disposal. Figure 1-1 locates Building 241 within the Complex.

Wastes are stored in closed 55-gallon drums on pallets. In a
5'x 6' shed with a tile over concrete floor. No containment berm exists. Figure 4-85 locates the SAA within Building 241.

4.88.2 Waste characteristics

Used diesel fuel oil filters, used oil filters, and empty oil cans are stored. The major constituents of concern are petroleum hydrocarbons.

4.88.3 Migration Pathways

Because this SAA is located inside Building 241, soil, groundwater, and surface waters are unlikely pathways. The floor in the vicinity of this SAA is free of cracks.

4.88.4 Evidence of Release

No spill reports, inspection reports, employee interviews, or visual observations indicate spills at this SAA.

4.88.5 Exposure Potential

This SAA is not in close proximity to any residential areas or sensitive environments. The limited storage capacity and nature of waste minimizes the potential exposures to Complex employees.

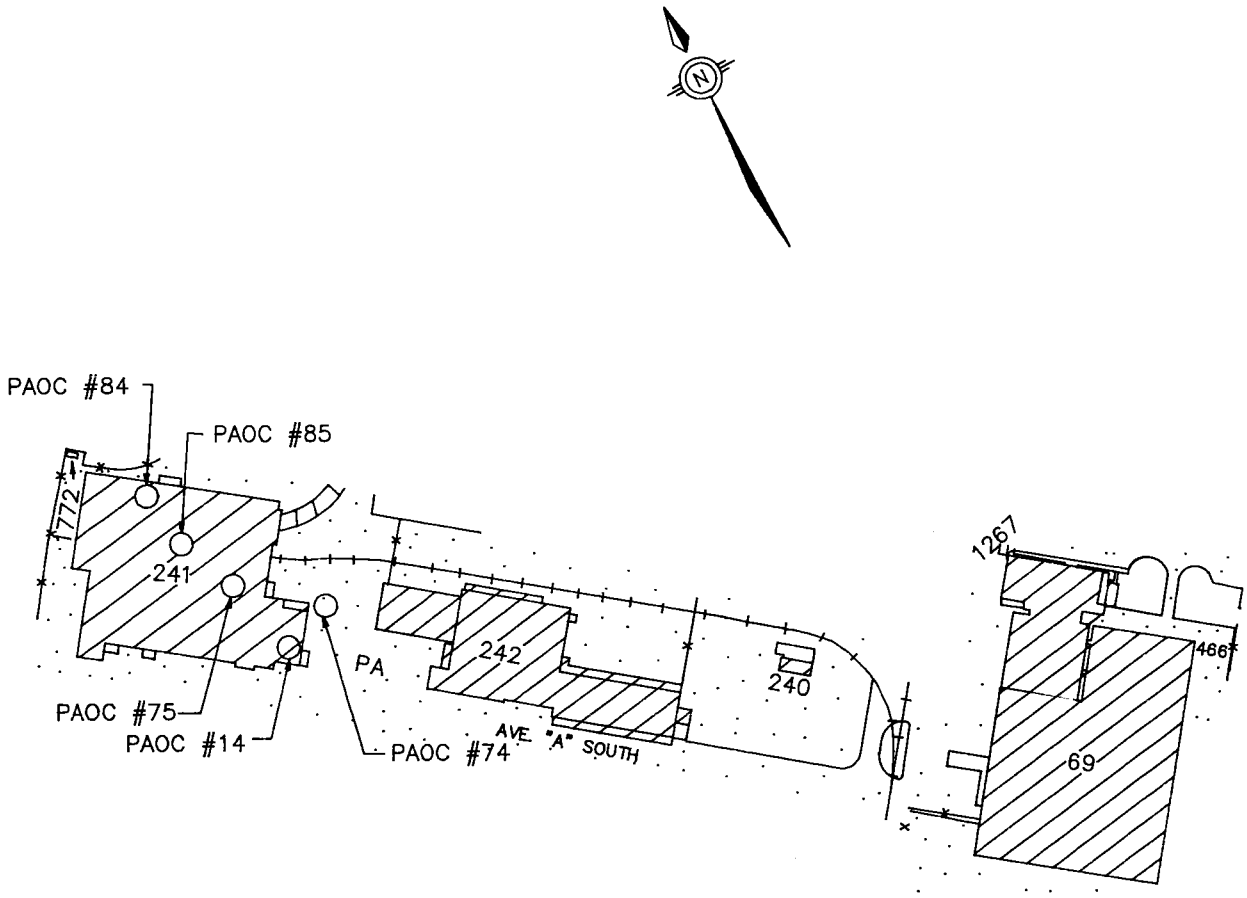

NOT TO SCALE

RCRA FACILITY
ASSESSMENT
NAVAL COMPLEX
CHARLESTON, S.C.

FIGURE 4-85
PAOC #85
BUILDING 241, SAA

DWG DATE: 02/16/94 | DWG NAME: 29AOC85

4.88.6 Recommended Action

No further investigation of this SAA is recommended due to the nature of the waste (solid waste with low liquid volume), storage practices, lack of evidence of a release from this unit, and limited migration pathways.

4.89 PAOC #86 — Satellite Accumulation Area, Building 35

4.89.1 Unit Characteristics

This SAA is an element of the Charleston Naval Shipyard hazardous waste management system. Hazardous wastes are accumulated at an SAA until 55-gallons of waste are accumulated [in accordance with 40 CFR 262.34(c)], then immediately transferred to a permitted hazardous waste storage facility prior to transport outside the Charleston Naval Complex for ultimate treatment or disposal. PAOC #86 has been combined with PAOC #39. Figure 1-1 locates Building 35 within the Complex. Figure 4-86 locates PAOC #86 within Building 35.

PAOC #86 was under a 2'x 3' ventilation hood in Building 35. The floor surface at the former location is linoleum over concrete.

4.89.2 Waste Characteristics

Acetic, hydrochloric, and nitric acids, ammonium persulfate, hydrogen peroxide were stored at this SAA.

4.89.3 Migration Pathways

Because this SAA is located inside Building 35 and under a ventilation hood, soil, groundwater, and surface waters are unlikely pathways. The floor in the vicinity of this SAA is free of cracks, protecting the underlying soil and groundwater.

4.89.4 Evidence of Release

No spill reports, inspection reports, employee interviews, or visual observations indicate spills at this SAA.

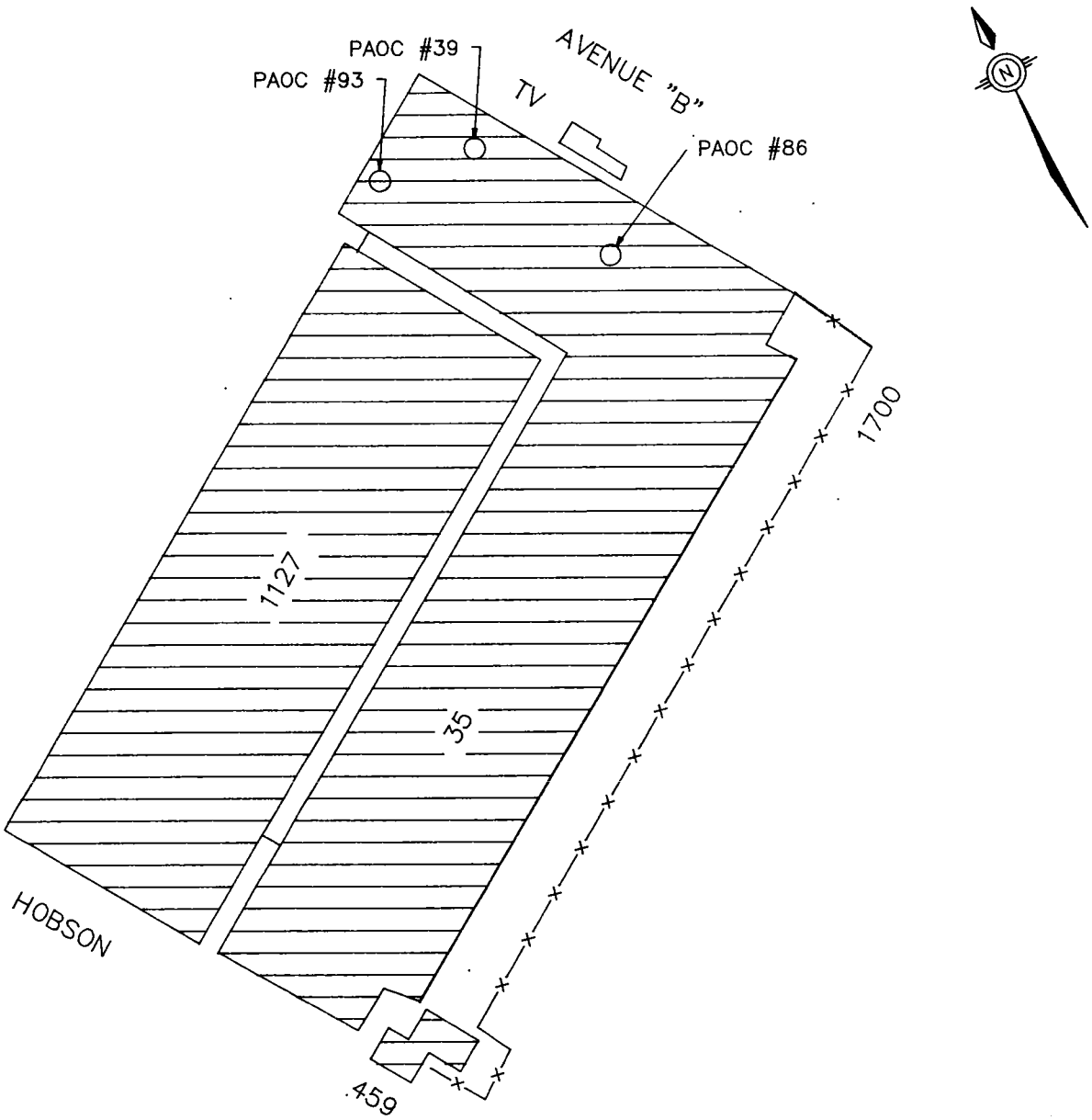

NOT TO SCALE

RCRA FACILITY
ASSESSMENT
NAVAL COMPLEX
CHARLESTON, S.C.

FIGURE 4-86
PAOC #86
BUILDING 35, SAA

DWG DATE: 02/16/94 | DWG NAME: 29AOC86

4.89.5 Exposure Potential

This SAA is not close to any residential areas or sensitive environments. The lack of evidence of a release and the restricted migration pathways limit the potential exposures to Charleston Naval Complex employees.

4.89.6 Recommended Action

This SAA is no longer operational. Per 40 CFR 262.34(a)(1), certification of closure is required in accordance with 40 CFR 265.111 and 114.

4.90 PAOC #87 — Satellite Accumulation Area, Building 681

4.90.1 Unit Characteristics

This PAOC is a less-than-90-day Accumulation Area (AA), which is an element of the Naval Shipyard hazardous waste management system. Hazardous wastes are accumulated at an AA for less than 90 days, then transferred to a permitted hazardous waste storage facility prior to transport outside the Charleston Naval Complex for ultimate treatment or disposal. Figure 1-1 locates Building 681 within the Complex. Figure 4-87 locates the AA near Building 681.

Wastes are stored in closed 55-gallon drums and 5-gallon containers, which are on self-containing pallets on a concrete floor. No containment berm exists.

4.90.2 Waste Characteristics

Aerosol cans, empty paint cans, paint rags, paint debris, oily rags, and various paints are stored. The major constituents of concern are volatile organic compounds, metals, and petroleum hydrocarbons.

4.90.3 Migration Pathways

This AA is located outside of Building 681; therefore, surface migration from surface runoff may occur. The floor in the vicinity of the AA is free of cracks, protecting the underlying soil and groundwater.

4.90.4 Evidence of Release

No spill reports, inspection reports, employee interviews, or physical evidence indicate spills at this AA.

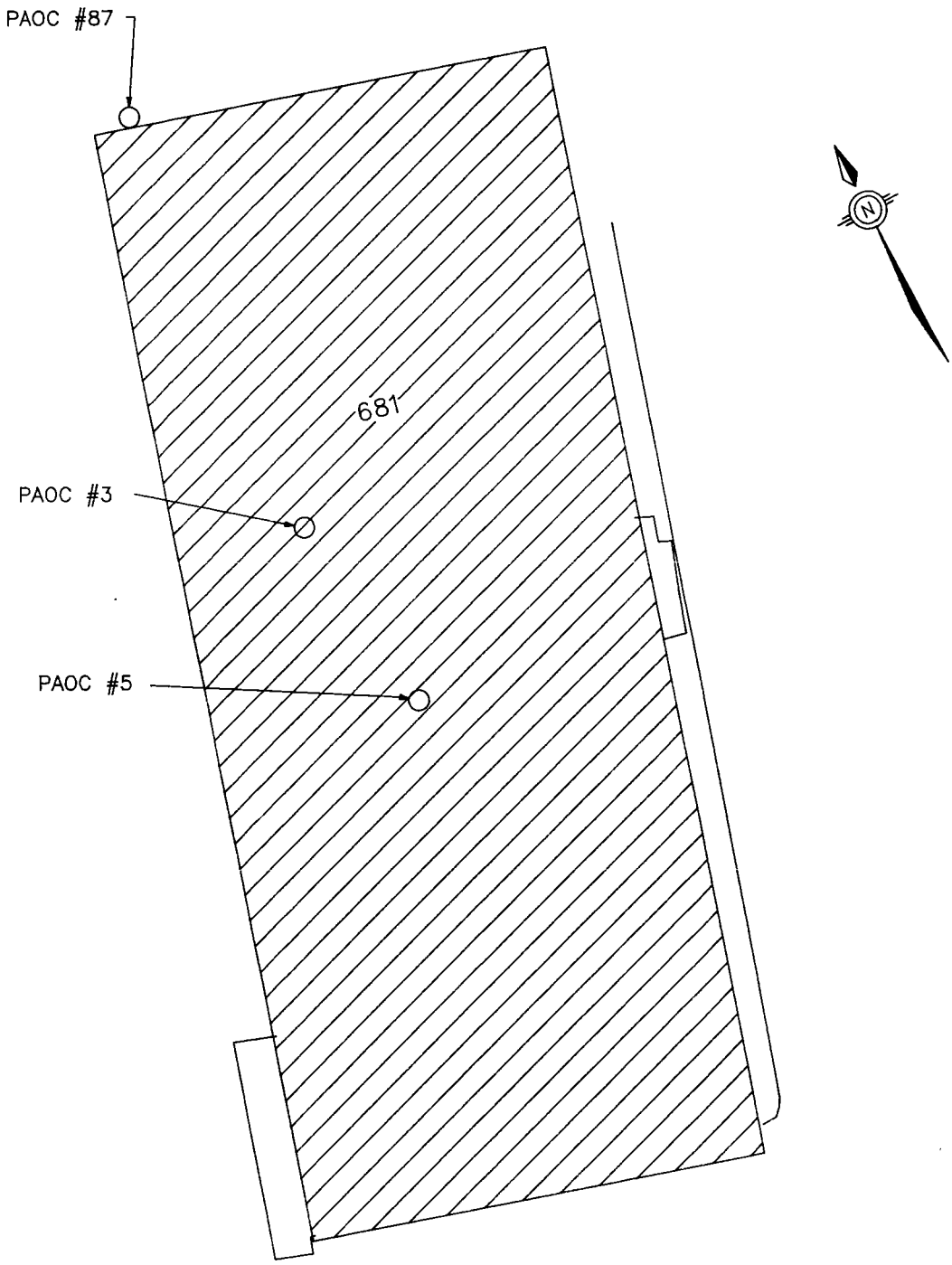

NOT TO SCALE

RCRA FACILITY
ASSESSMENT
NAVAL COMPLEX
CHARLESTON, S.C.

FIGURE 4-87
PAOC #87
BUILDING 681, SAA

DWG DATE: 02/16/94 | DWG NAME: 29AOC87

4.90.5 Exposure Potential

This AA is not close to any residential areas or sensitive environments. The limited storage capacity, nature of waste, and lack of evidence of a major release limits potential exposures to Charleston Naval Complex employees.

4.90.6 Recommended Action

No further investigation of this AA is recommended due to the nature of the waste (oily rags, empty paint cans), storage practices, lack of evidence of a release from this unit, and limited migration pathways.

4.91 PAOC #88 — Satellite Accumulation Area, Building 1776

4.91.1 Unit Characteristics

This SAA is an element of the Naval Shipyard hazardous waste management system. Hazardous wastes are accumulated at an SAA until 55 gallons of waste are accumulated [in accordance with 40CFR 262.34(c)], then immediately transferred to a permitted hazardous waste storage facility prior to transport outside the Charleston Naval Complex for ultimate treatment or disposal. Figure 1-2 locates Building 1776 within the Complex.

Wastes are stored in a closed 55-gallon drum housed in a metal shed (approximately 10'x 8') with an asphalt floor. Figure 4-88 locates the SAA near Building 1776.

4.91.2 Waste characteristics

Waste oil, used anti-freeze, oily rags, oil spill residue, and empty anti-freeze containers are stored at this SAA. The major constituents of concern are volatile organic compounds and petroleum hydrocarbons.

4.91.3 Migration Pathways

Because this SAA is located outside Building 1776, soil, groundwater, and surface waters are likely pathways. Although the asphalt in the vicinity of this SAA is free of cracks, it may not have the integrity to protect the underlying soil and groundwater from potential releases from the unit.

4.91.4 Evidence of Release

No spill reports, inspection reports, employee interviews, or visual observations indicate spills at this SAA.

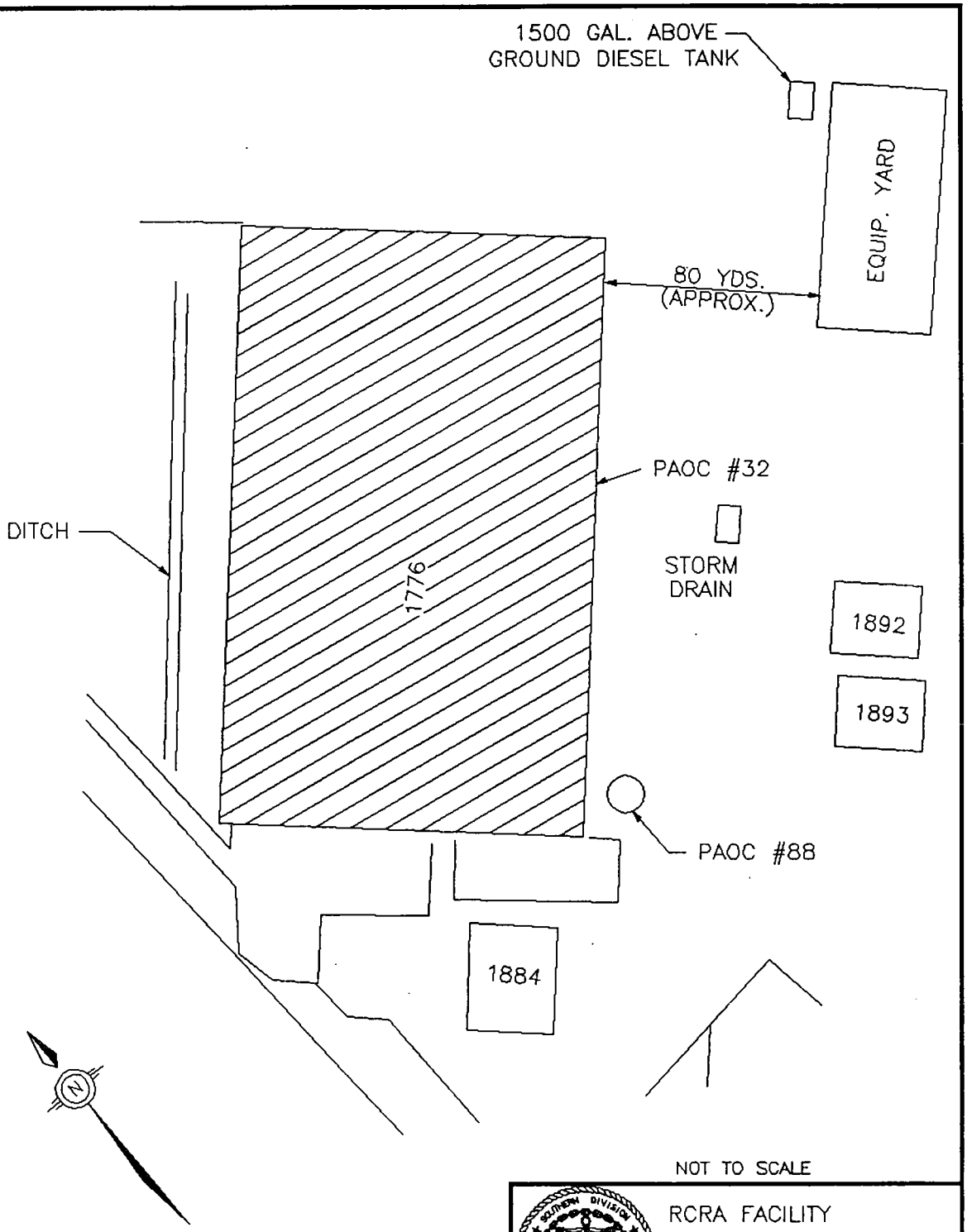

NOT TO SCALE

RCRA FACILITY ASSESSMENT
NAVAL COMPLEX
CHARLESTON, S.C.

FIGURE 4-88
PAOC #88
BUILDING 1176, SAA

DWG DATE: 02/09/94 | DWG NAME: 27S1776

4.91.5 Exposure Potential

This SAA is not close to any residential areas or sensitive environments. The limited storage capacity, nature of waste, and lack of evidence of a major release limits potential exposures to Charleston Naval Complex employees.

4.91.6 Recommended Action

There is no evidence of a release from this unit. However, confirmation sampling is recommended due to the nature of the waste (oil and antifreeze) and the design of the unit (on top of asphalt) which may allow migration of any potential releases.

4.92 PAOC #89 — Satellite Accumulation Area, Building 249

4.92.1 Unit Characteristics

This SAA is an element of the Naval Shipyard hazardous waste management system. Hazardous wastes are accumulated at an SAA until 55 gallons of waste are accumulated [in accordance with 40CFR 262.34(c)], then immediately transferred to a permitted hazardous waste storage facility prior to transport outside the Charleston Naval Complex for ultimate treatment or disposal. Figure 1-1 locates Building 249 within the Naval Base. Figure 4-89 located the PAOC within Building 249. Information regarding the design and construction features of this SAA is currently unavailable.

4.92.2 Waste Characteristics

Aerosol paint cans are stored at this SAA. The major constituents of concern are volatile organic compounds and metals.

4.92.3 Migration Pathways

Information required to determine migration pathways is currently not available .

4.92.4 Evidence of Release

Information required to determine evidence of release is currently not available.

4.92.5 Exposure Potential

This SAA is not close to any residential areas or sensitive environments. Additional information required to determine exposure potential is currently not available.

4.92.6 Recommended Action

Due to insufficient information, no actions can be recommended. Further attempts must be made to obtain more information before recommending this SAA for a RCRA Facility Investigation.

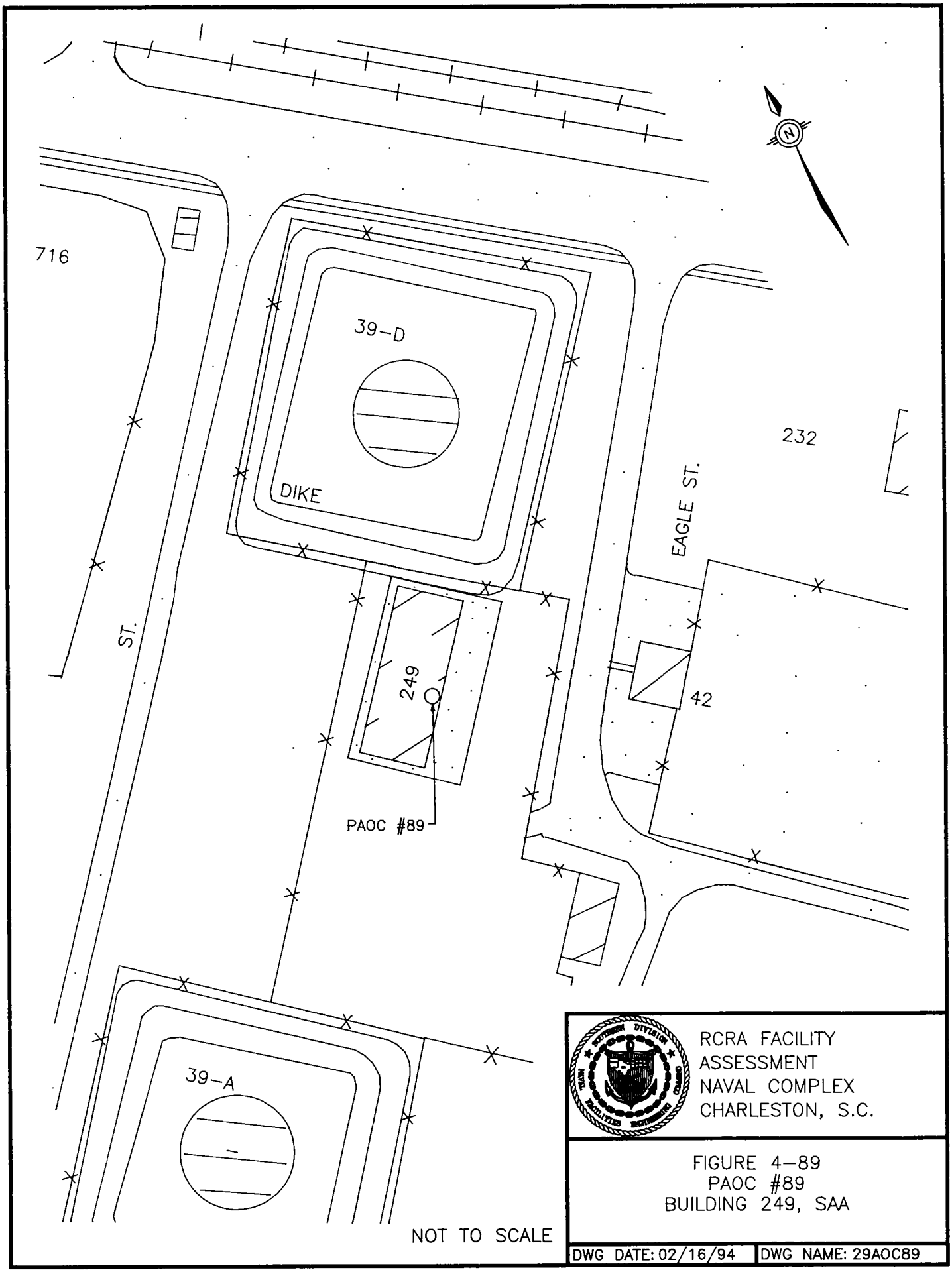
716
39-D
DIKE
232
EAGLE ST.
ST.
249
42
PAOC #89
39-A
NOT TO SCALE
RCRA FACILITY
ASSESSMENT
NAVAL COMPLEX
CHARLESTON, S.C.
FIGURE 4-89
PAOC #89
BUILDING 249, SAA
DWG DATE: 02/16/94
DWG NAME: 29AOC89

4.93 PAOC #90 — Satellite Accumulation Area, Building 250

4.93.1 Unit Characteristics

This SAA is an element of the Naval Shipyard hazardous waste management system. Hazardous wastes are accumulated at an SAA until 55 gallons of waste are accumulated [in accordance with 40CFR 262.34(c)], then immediately transferred to a permitted hazardous waste storage facility prior to transport outside the Charleston Naval Complex for ultimate treatment or disposal. Figure 1-1 locates Building 250 within the Naval Base. Figure 4-90 located the PAOC within Building 250, SAA.

4.93.2 Waste Characteristics

Information required to determine waste characteristics is currently not available.

4.93.3 Migration Pathways

Information required to determine migration pathways is currently not available.

4.93.4 Evidence of Releae

Information required to determine evidence of release is currently not available

4.93.5 Exposure Potential

This SAA is not in close proximity to any residential areas or sensitive environments. Information required to determine exposure potential is currently not available.

4.93.6 Recommended Action

Due to insufficient information, an adequate RCRA Facility Assessment of this PAOC can not be made, therefore no actions can be recommended.

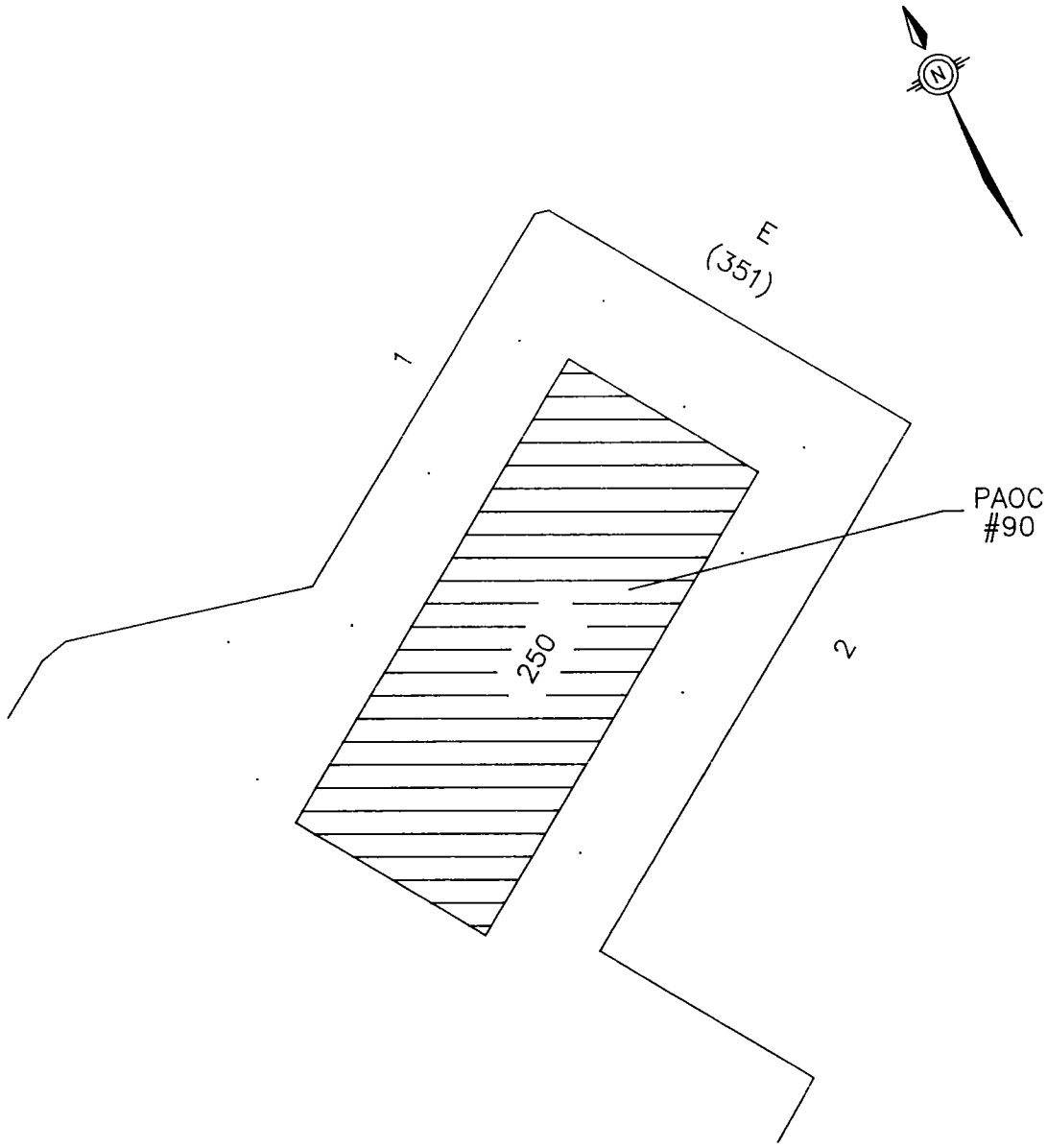

CHANGE TEXT

RCRA FACILITY
ASSESSMENT
NAVAL COMPLEX
CHARLESTON, S.C.

FIGURE 4-90
PAOC #90
BUILDING 250, SAA

NOTE: THE EXACT LOCATION OF
PAOC #90 IS NOT KNOWN

DWG DATE: 02/16/94 | DWG NAME: 29AOC90

4.94 PAOC #91 - Satellite Accumulation Area, Building NH-51

4.94.1 Unit Characteristics

This SAA is an element of the Charleston Naval Shipyard hazardous waste management system. Hazardous wastes are accumulated at an SAA until 55 gallons of waste are accumulated [in accordance with 40 CFR 262.34(c)], then immediately transferred to a permitted hazardous waste storage facility prior to transport outside the Charleston Naval Complex for ultimate treatment or disposal. Figure 1-1 locates Building NH-51 within the Complex.

Wastes are stored in closed 5-gallon plastic containers. The floor surface is tile over concrete. Figure 4-91 locates the SAA in Building NH-51.

4.94.2 Waste characteristics

This SAA stores photographic fixer. Additional characteristics are unknown.

4.94.3 Migration Pathways

Because this SAA is located inside Building NH-51, soil, groundwater, and surface waters are unlikely pathways. The floor in the vicinity of this SAA is free of cracks, protecting the underlying soil and groundwater.

4.94.4 Evidence of Release

No spill reports, inspection reports, employee interviews, or visual observations indicate spills at this SAA.

4.94.5 Exposure Potential

This SAA is not close to any residential areas or sensitive environments. The limited storage capacity, nature of waste, and lack of evidence of a major release limits potential exposures to Charleston Naval Complex employees.

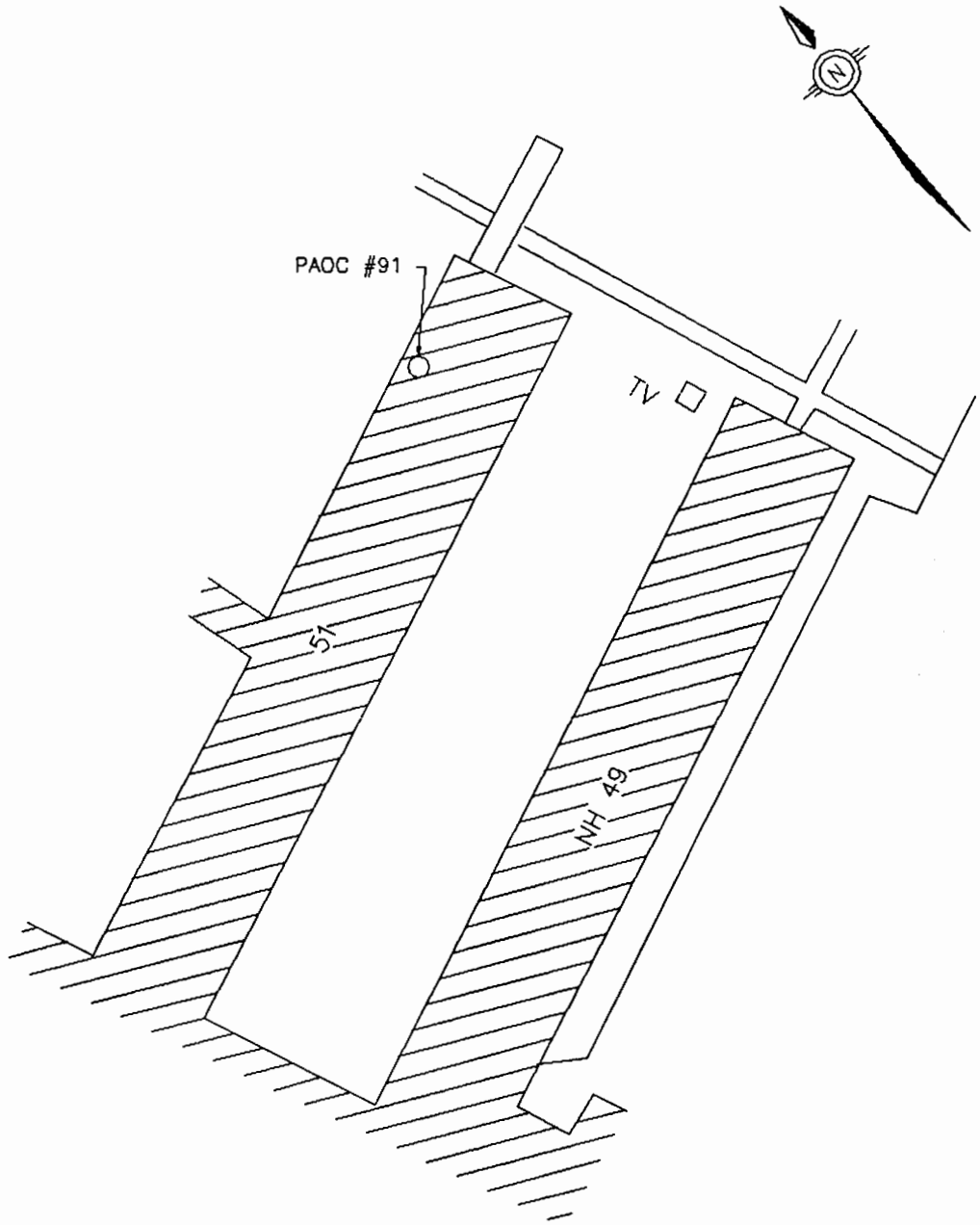

NOT TO SCALE

RCRA FACILITY
ASSESSMENT
NAVAL COMPLEX
CHARLESTON, S.C.

FIGURE 4-91
PAOC #91
BUILDING NH51, SAA

DWG DATE: 02/10/94 | DWG NAME: 27NNH49

4.94.6 Recommended Action

No further investigation of this SAA is recommended due to the storage practices, lack of evidence of a release from this unit, and limited migration pathways.

4.95 PAOC #92 — Satellite Accumulation Area, Building 234

4.95.1 Unit Characteristics

This SAA is an element of the Naval Shipyard hazardous waste management system. Hazardous wastes are accumulated at an SAA until 55 gallons of waste are accumulated [in accordance with 40CFR 262.34(c)], then immediately transferred to a permitted hazardous waste storage facility prior to transport outside the Charleston Naval Complex for ultimate treatment or disposal. Figure 1-1 locates Building 234 within the Complex. Figure 4-92 locates the PAOC within Building 234.

Wastes at this unit are stored in closed 5-gallon plastic containers, which are in a drip pan. The floor surface is floor tile over concrete.

4.95.2 Waste characteristics

Photographic developer chemicals including fixers with hardeners (ammonium thiosulfate, sodium sulfite, acetic acid, and boric acid), ammonia, and EDTA containers are stored at this SAA.

4.95.3 Migration Pathways

Because this SAA is located inside Building 234, soil, groundwater, and surface waters are unlikely pathways. The floor in the vicinity of this SAA is free of cracks, protecting the underlying soil and groundwater.

4.95.4 Evidence of Release

No spill reports, inspection reports, employee interviews, or visual observations indicate spills at this SAA.

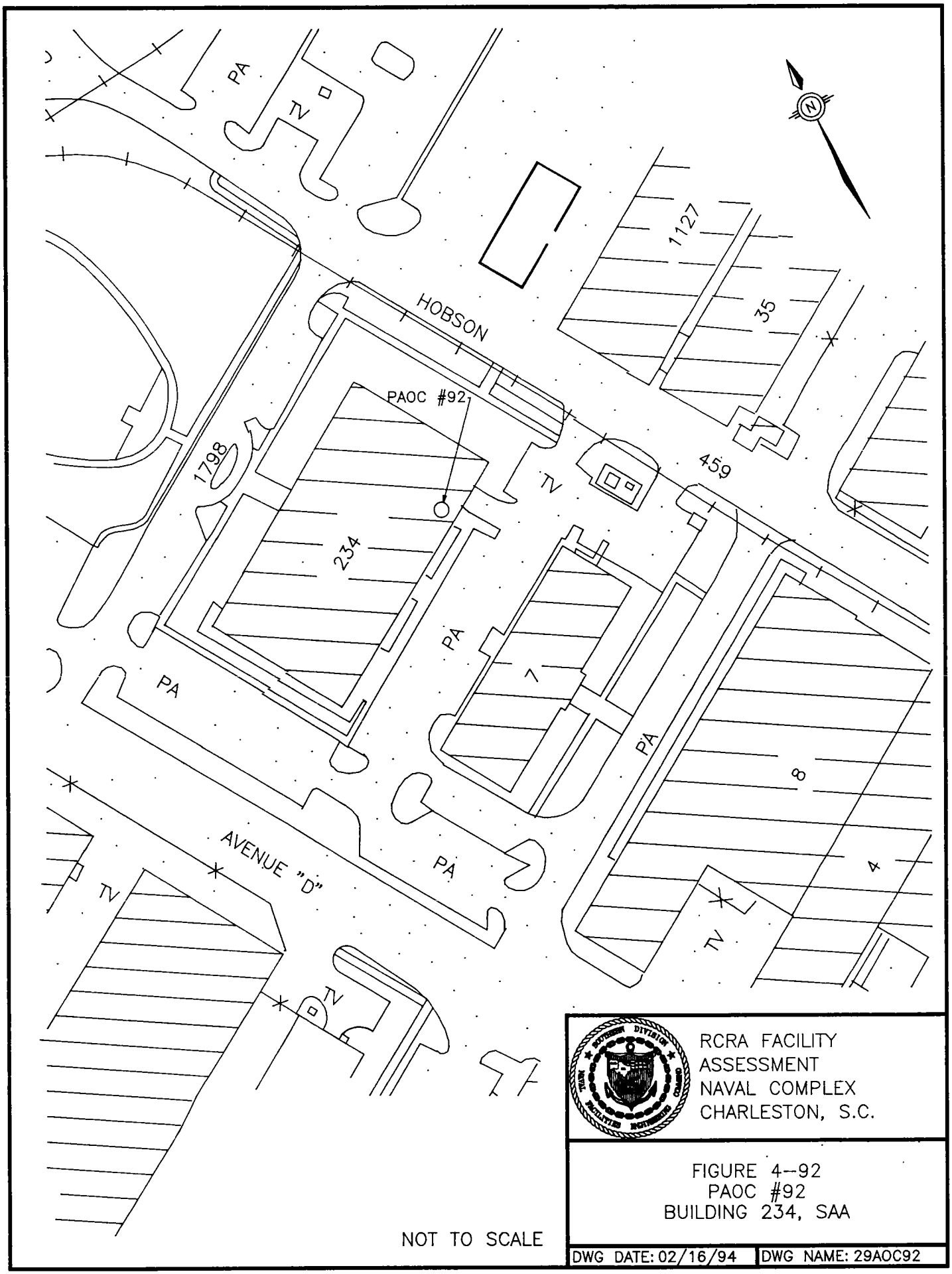
PA
TV
1127
35
HOBSON
PAOC #92
1798
459
TV
234
PA
7
PA
PA
8
AVENUE "D"
PA
4
TV
TV
TV
NOT TO SCALE
RCRA FACILITY
ASSESSMENT
NAVAL COMPLEX
CHARLESTON, S.C.
FIGURE 4--92
PAOC #92
BUILDING 234, SAA
DWG DATE: 02/16/94
DWG NAME: 29AOC92

4.95.5 Exposure Potential

This SAA is not close to any residential areas or sensitive environments. The lack of evidence of a release and limited migration pathways limits the potential exposures to Naval Base employees.

4.95.6 Recommended Action

No further investigation of this SAA is recommended due to the storage practices, lack of evidence of a release from this unit, and limited migration pathways

4.96 PAOC #93 — Satellite Accumulation Area, Building 35

4.96.1 Unit Characteristics

This SAA is an element of the Charleston Naval Shipyard hazardous waste management system. Hazardous wastes are accumulated at an SAA until 55 gallons of waste are accumulated [in accordance with 40 CFR 262.34(c)], then immediately transferred to a permitted hazardous waste storage facility prior to transport outside the Charleston Naval Complex for ultimate treatment or disposal. PAOC #93 has been combined with PAOC #39. Figure 1-1 locates Building 35 within the Complex.

Wastes are stored in drums ranging in size from 6 to 21 gallons. The floor surface is tile over concrete. No containment berm exists. Figure 4-93 locates the current location of PAOC #93 in Building 35.

4.96.2 Waste Characteristics

Spent aerosol cans and oily rags are stored. The major constituents of concern are volatile organic compounds and petroleum hydrocarbons.

4.96.3 Migration Pathways

Because this SAA is located inside Building 35, soil, groundwater, and surface waters are unlikely pathways. The floor in the vicinity of this SAA is free of cracks, protecting the underlying soil and groundwater.

4.96.4 Evidence of Release

No spill reports, inspection reports, employee interviews, or visual observations indicate spills at this SAA.

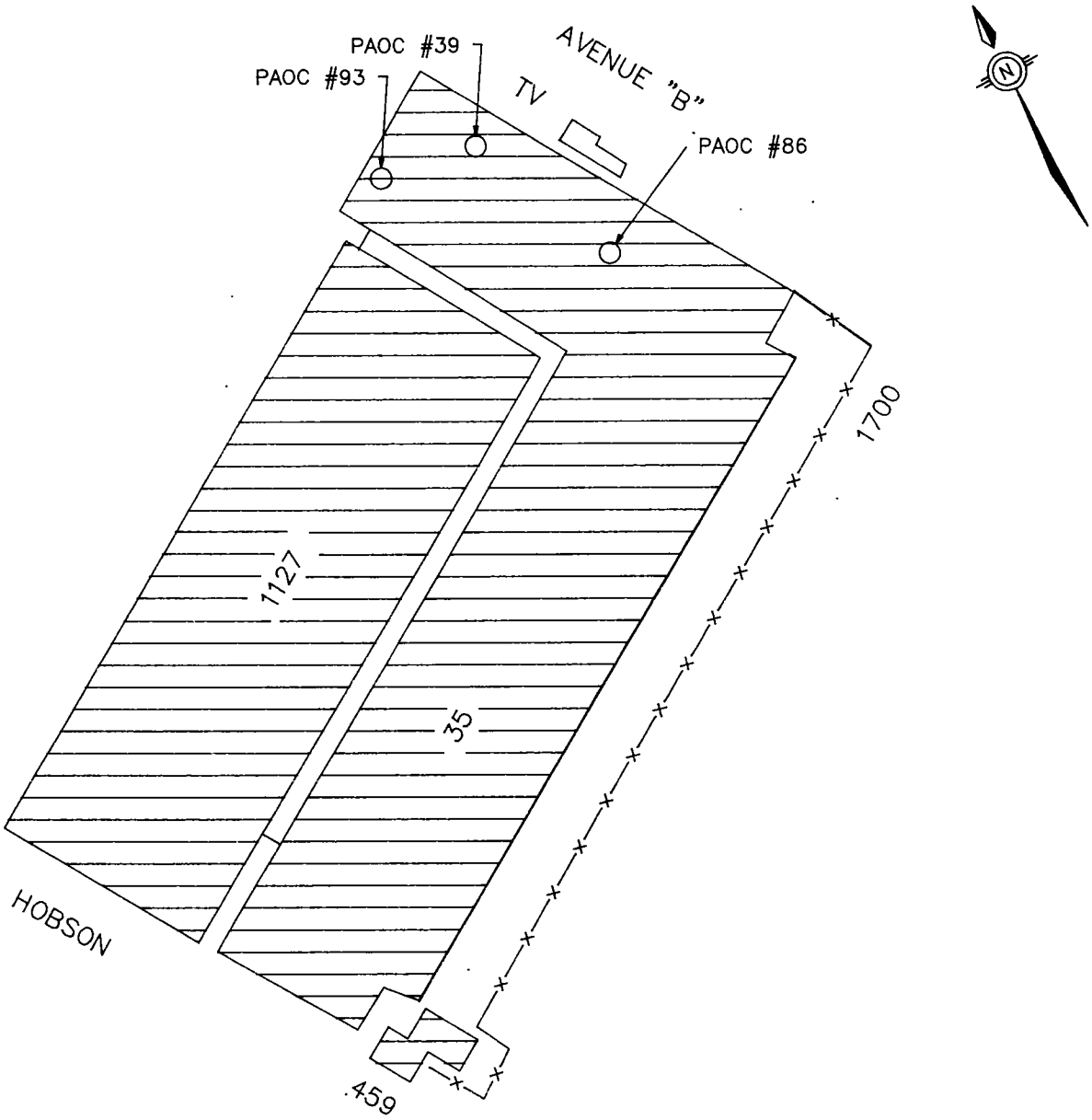

NOT TO SCALE

RCRA FACILITY
ASSESSMENT
NAVAL COMPLEX
CHARLESTON, S.C.

FIGURE 4-93
PAOC #93
BUILDING 35, SAA

DWG DATE: 02/16/94 | DWG NAME: 29AOC93

4.96.5 Exposure Potential

This SAA is not close to any residential areas or sensitive environments. The limited storage capacity, nature of waste, and lack of evidence of a release limits potential exposures to Charleston Naval Complex employees.

4.96.6 Recommended Action

No further investigation of this SAA is recommended due to the nature of the waste (aerosol cans and oily rags), storage practices, lack of evidence of a release from this unit, and limited migration pathways.

4.97 PAOC #94 - Satellite Accumulation Area, Building 1346

4.97.1 Unit Characteristics

This SAA is an element of the Charleston Naval Shipyard hazardous waste management system. Hazardous wastes are accumulated at an SAA until 55 gallons of waste are accumulated [in accordance with 40 CFR 262.34(c)], then immediately transferred to a permitted hazardous waste storage facility prior to transport outside the Charleston Naval Complex for ultimate treatment or disposal. Figure 1-1 locates Building 1346 within the Complex.

Wastes are stored in closed 55-gallon drums and a 20-gallon drum. The floor surface is floor tile overlying concrete. No containment berm exists. Hazardous waste is generated from the retail fuel distribution activities performed at this location. Figure 4-94 locates the SAA in Building 1346.

4.97.2 Waste Characteristics

Empty aerosol cans, oily rags, used oil filters, and empty oil containers are stored. The major constituents of concern are volatile organic compounds and petroleum hydrocarbons.

4.97.3 Migration Pathways

Because this SAA is located inside Building 1346, soil, groundwater, and surface waters are unlikely pathways. The floor in the vicinity of this SAA is free of cracks.

4.97.4 Evidence of Release

No spill reports, inspection reports, employee interviews, or visual observations indicate spills at this SAA.

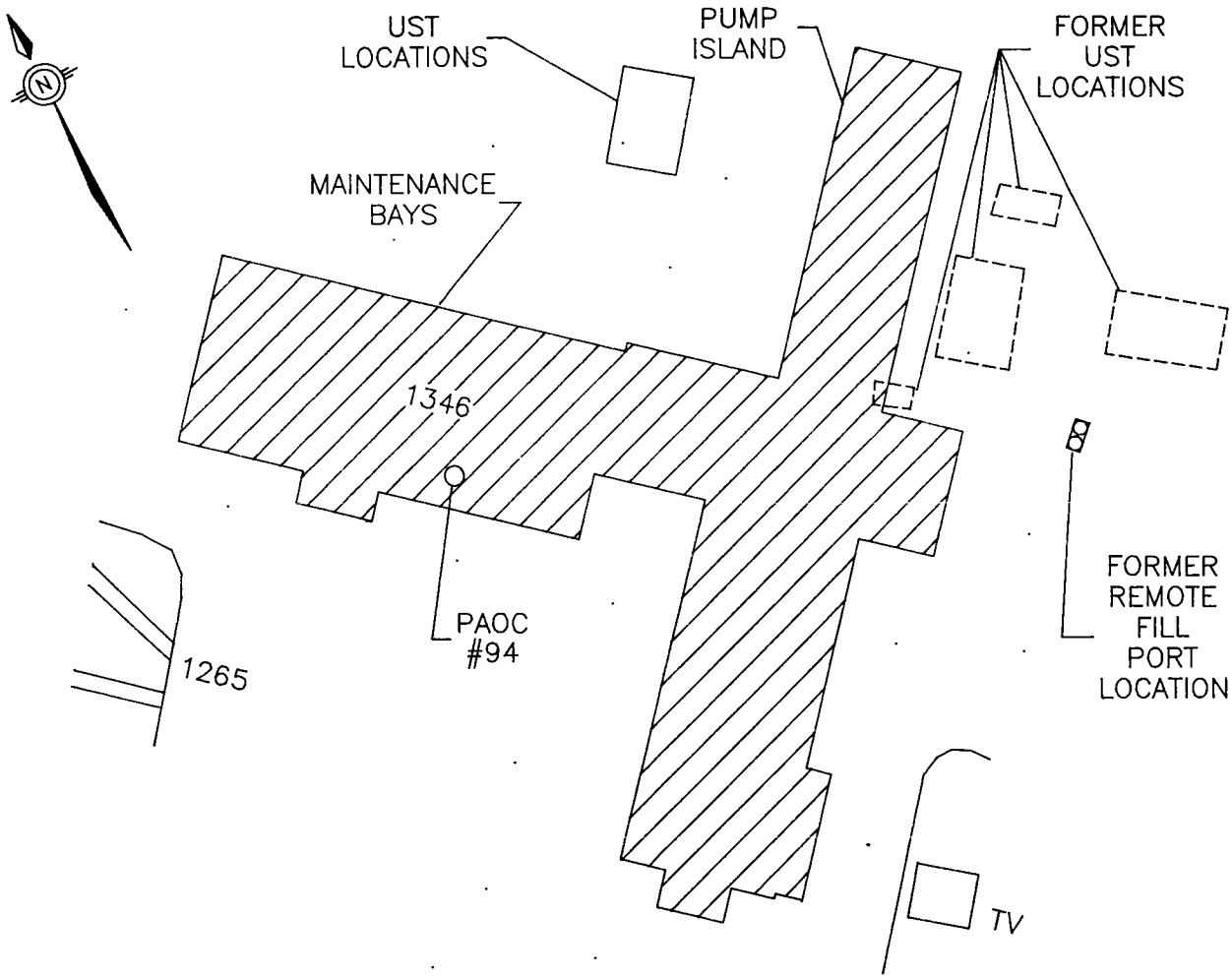

NOT TO SCALE

RCRA FACILITY
ASSESSMENT
NAVAL COMPLEX
CHARLESTON, S.C.

FIGURE 4-94
PAOC #94
BUILDING 1346, SAA

DWG DATE: 02/16/94 | DWG NAME: 29AOC94

4.97.5 Exposure Potential

This SAA is not close to any residential areas or sensitive environments. The limited storage capacity, nature of waste, and lack of evidence of a major release minimize potential exposures to Complex employees.

4.98 PAOC #95 - Satellite Accumulation Area, Building 636

4.98.1 Unit Characteristics

This SAA is an element of the Charleston Naval Shipyard hazardous waste management system. Hazardous wastes are accumulated at an SAA until 55 gallons of waste are accumulated [in accordance with 40 CFR 262.34(c)], then immediately transferred to a permitted hazardous waste storage facility prior to transport outside the Charleston Naval Complex for ultimate treatment or disposal. Figure 1-2 locates Building 636 within the Complex.

Wastes are stored in closed 55-gallon drums. The floor surface is a concrete. No containment berm exists. Figure 4-95 locates the SAA within Building 636.

4.98.2 Waste Characteristics

Empty aerosol and paint cans, paint rags, and empty grease containers are stored. The major constituents of concern are volatile organic compounds, metals, and petroleum hydrocarbons.

4.98.3 Migration Pathways

Because this SAA is located inside Building 636, soil, groundwater, and surface waters are unlikely pathways. The floor in the vicinity of this SAA is free of cracks.

4.98.4 Evidence of Release

No spill reports, inspection reports, employee interviews, or visual observations indicate spills at this SAA.

4.98.5 Exposure Potential

This SAA is not close to any residential areas or sensitive environments. The limited storage capacity, nature of waste, and lack of evidence of a major release minimizes potential exposures to Complex employees.

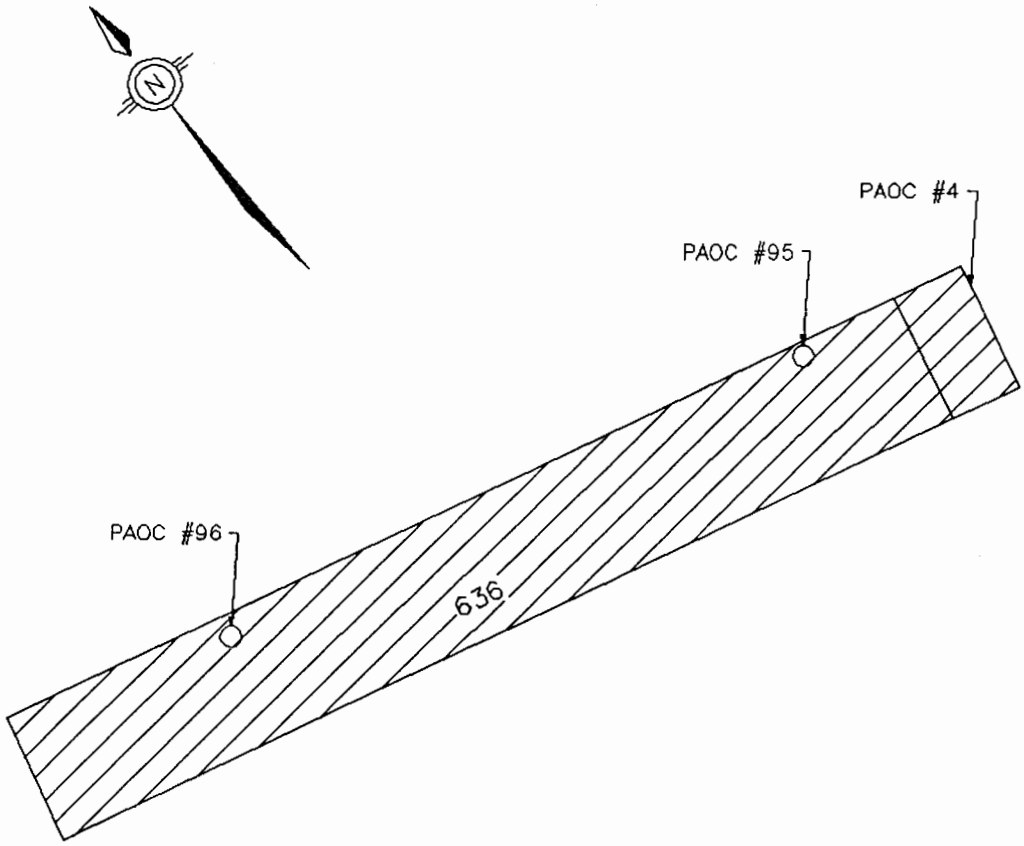

NOT TO SCALE

RCRA FACILITY
ASSESSMENT
NAVAL COMPLEX
CHARLESTON, S.C.

FIGURE 4-95
PAOC #95
BUILDING 636, SAA

DWG DATE: 02/12/94 | DWG NAME: 27S636

4.98.6 Recommended Action

No further investigation of this SAA is recommended due to the nature of the waste (solid waste with very little liquid content), storage practices, lack of evidence of a release from this unit, and limited migration pathways.

4.97.6 Recommended Action

No further investigation of this SAA is recommended due to the nature of the waste (solid waste with little liquid content), storage practices, lack of evidence of a release from this unit, and limited migration pathways.

4.99 PAOC #96 - Satellite Accumulation Area, Building 636

4.99.1 Unit Characteristics

This SAA is an element of the Charleston Naval Shipyard hazardous waste management system. Hazardous wastes are accumulated at an SAA until 55 gallons of waste are accumulated [in accordance with 40 CFR 262.34(c)], then immediately transferred to a permitted hazardous waste storage facility prior to transport outside the Charleston Naval Complex for ultimate treatment or disposal. Figure 1-2 locates Building 636 within the Complex.

Wastes are stored in closed 55-gallon drums on a concrete slab. No containment berm exists. Figure 4-96 locates the SAA within Building 636.

4.99.2 Waste characteristics

Spent aerosol and paint cans, paint rags, and empty grease containers are stored. The major constituents of concern are volatile organic compounds, metals, and petroleum hydrocarbons.

4.99.3 Migration Pathways

Because this SAA is located inside Building 636, soil, groundwater, and surface waters are unlikely pathways. The floor in the vicinity of this SAA is free of cracks.

4.99.4 Evidence of Release

No spill reports, inspection reports, employee interviews, or visual observations indicate spills at this SAA.

4.99.5 Exposure Potential

This SAA is not close to any residential areas. The Cooper River is approximately 1800 feet from Building 636. The design features of the unit, nature of waste (i.e. cans, rags), and lack of evidence of a release minimize the likelihood of potential exposures to Complex employees.

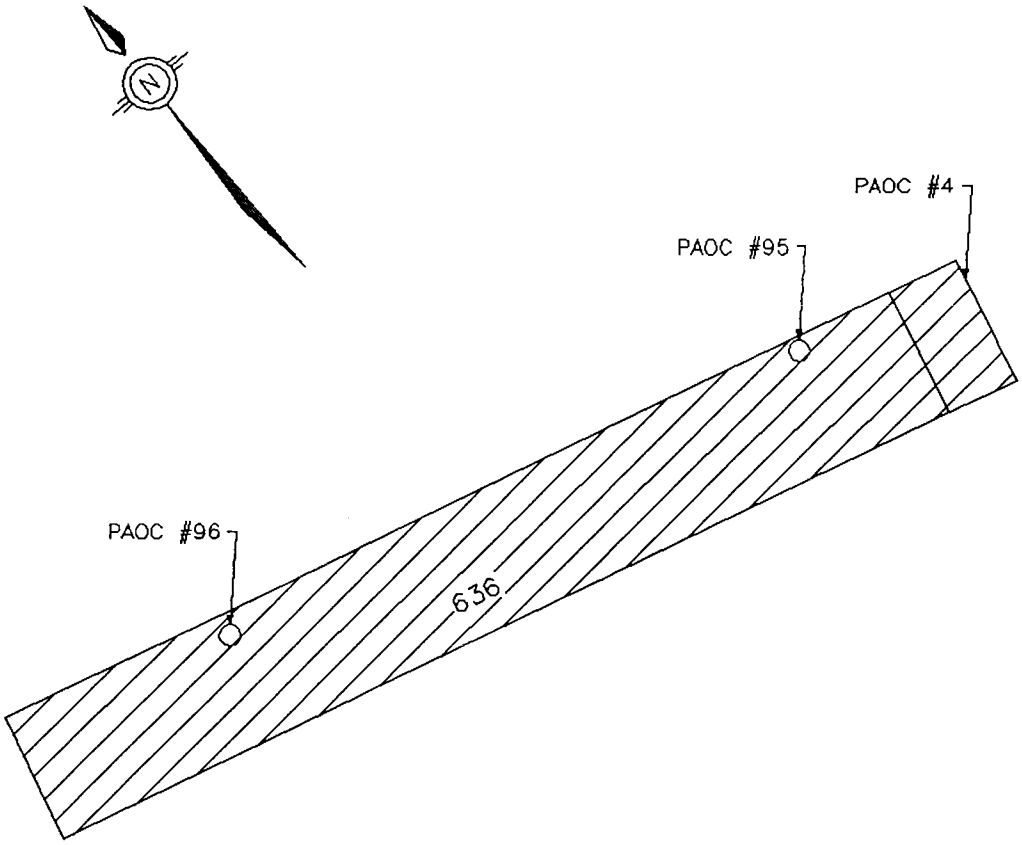

NOT TO SCALE

RCRA FACILITY
ASSESSMENT
NAVAL COMPLEX
CHARLESTON, S.C.

FIGURE 4-96
PAOC #96
BUILDING 636, SAA

DWG DATE: 02/12/94 | DWG NAME: 27S636

4.99.6 Recommended Action

No further investigation of this SAA is recommended due to the nature of the waste, storage practices, lack of evidence of a release from this unit, and limited migration pathways.

4.100 PAOC #97 - Satellite Accumulation Area, Building 1508

4.100.1 Unit Characteristics

This SAA is an element of the Naval Shipyard hazardous waste management system. Hazardous wastes are accumulated at an SAA until 55 gallons of waste are accumulated [in accordance with 40 CFR 262.34(c)], then immediately transferred to a permitted hazardous waste storage facility prior to transport outside the Charleston Naval Complex for ultimate treatment or disposal. Figure 1-2 locates Building 1508 within the Complex.

Wastes are stored in closed 55-gallon drums. The floor surface is floor tile overlying concrete. No containment berm exists. Figure 4-97 locates the SAA within Building 1508.

4.100.2 Waste Characteristics

Oily rags, oily paper, oil-dry compound, and used oil containers are stored. The major constituents of concern are petroleum hydrocarbons.

4.100.3 Migration Pathways

Because this SAA is located inside Building 1508, soil, groundwater, and surface waters are unlikely pathways. The floor in the vicinity of this SAA is free of cracks.

4.100.4 Evidence of Release

No spill reports, inspection reports, employee interviews, or visual observations indicate of spills at this SAA.

4.100.5 Exposure Potential

This SAA is not in close proximity to any residential areas. The Cooper River is approximately 1800 feet from Building 1508. The design features of the unit, nature of waste (i.e. rags, paper, containers), and lack of evidence of a release minimize the likelihood of potential exposures to Complex employees.

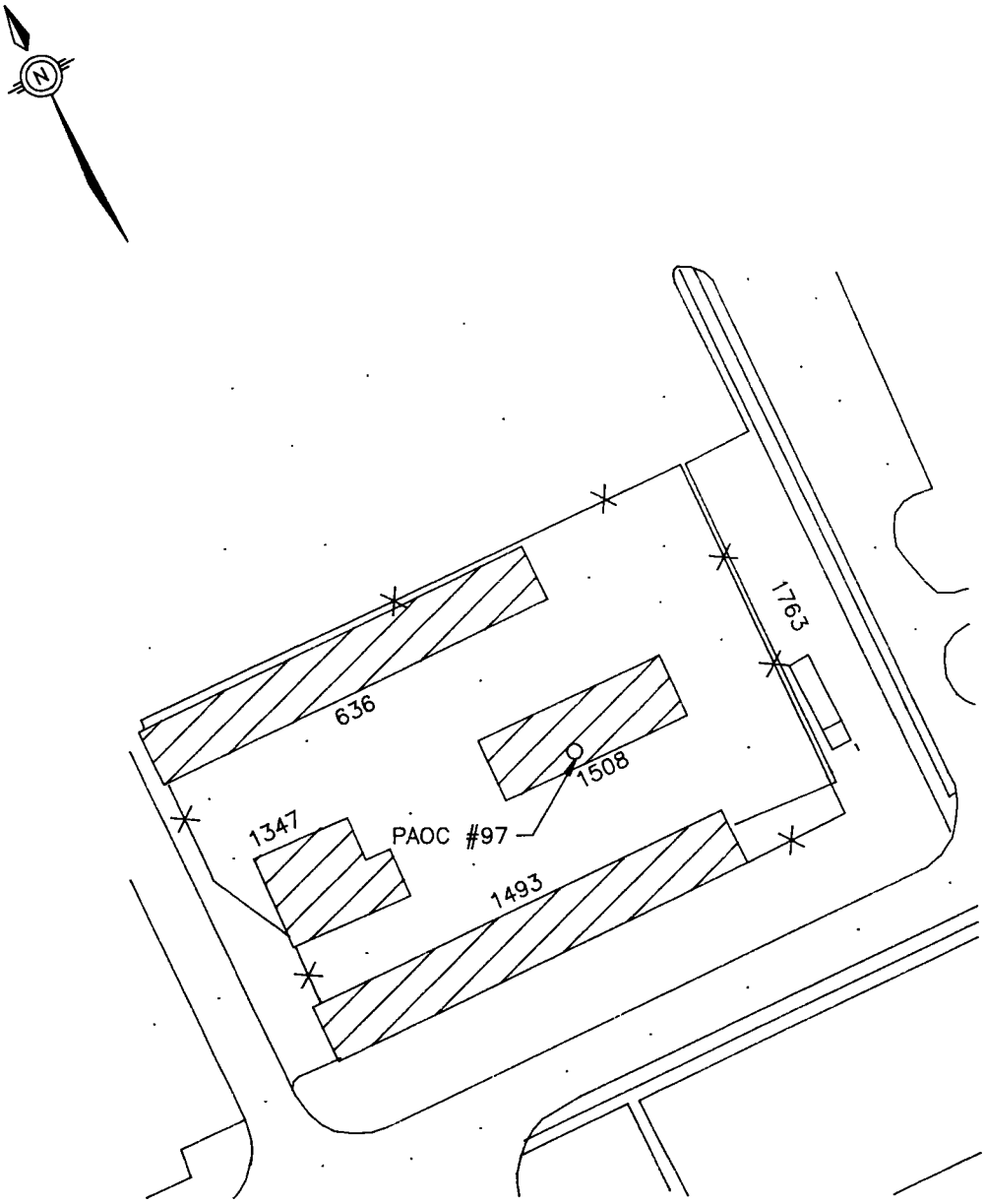

NOT TO SCALE

RCRA FACILITY
ASSESSMENT
NAVAL COMPLEX
CHARLESTON, S.C.

FIGURE 4-97
PAOC #97
BUILDING 1508, SAA

DWG DATE: 02/16/94 | DWG NAME: 29AOC97

4.100.6 Recommended Action

No further investigation of this SAA is recommended due to the nature of the waste ( ), storage practices, lack of evidence of a release from this unit, and limited migration pathways.

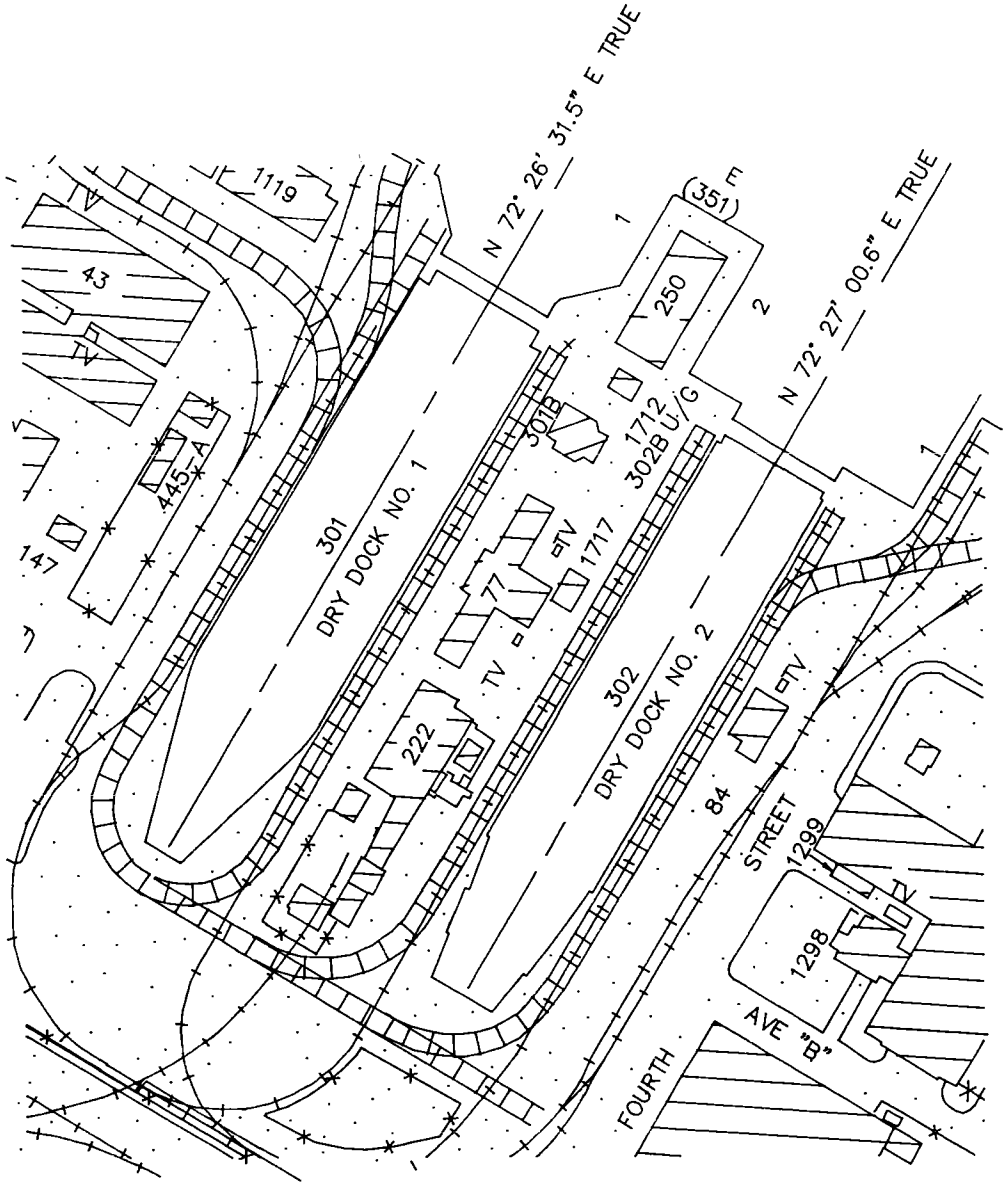

NOT TO SCALE

NOTE: THE EXACT LOCATION OF PAOC #98 IS UNKNOWN

RCRA FACILITY ASSESSMENT
NAVAL COMPLEX
CHARLESTON, S.C.

FIGURE 4-98
PAOC #98
DD #2, SAA

DWG DATE: 02/16/94 | DWG NAME: 29AOC98

4.102 PAOC #99 — Less-Than-90-Day Accumulation Area, Building 1173

4.102.1 Unit Characteristics

This less than 90-day Accumulation Area (AA) is an element of the Naval Shipyard hazardous waste management system. Hazardous wastes are accumulated at an AA for less than 90 days, then transferred to a permitted hazardous waste storage facility prior to transport outside the Charleston Naval Complex for ultimate treatment or disposal. Figure 1-1 locates Building 1173 within the Complex.

4.102.2 Waste Characteristics

Sufficient information is not available to determine waste characteristics.

4.102.3 Migration Pathways

Sufficient information is not available to determine migration pathways.

4.102.4 Evidence of Release

Sufficient information is not available to determine evidence of release.

4.102.5 Exposure Potential

This AA is not close to any residential areas. The Cooper River is approximately 1500 feet from Building 1173.

4.102.6 Recommended Action

There is no evidence of a release from this unit. However, confirmation sampling is recommended due to insufficient available information.

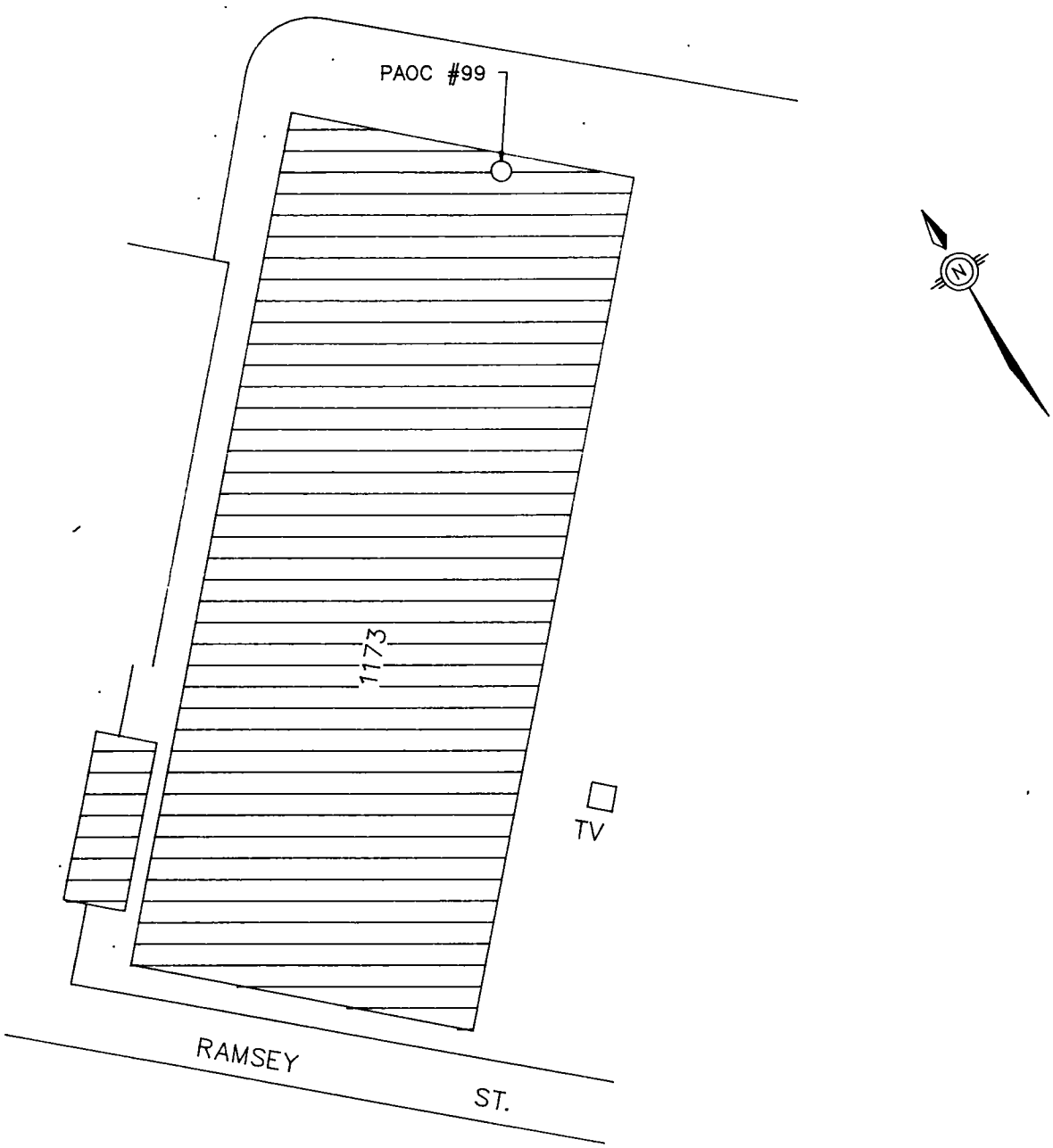

NOT TO SCALE

RCRA FACILITY
ASSESSMENT
NAVAL COMPLEX
CHARLESTON, S.C.

FIGURE 4-99
PAOC #99
BUILDING 1173, SAA

DWG DATE: 02/16/94 | DWG NAME: 29AOC99

4.103 PAOC #100 — Satellite Accumulation Area, Building NH-1

4.103.1 Unit Characteristics

This SAA is an element of the Charleston Naval Shipyard hazardous waste management system. Hazardous wastes are accumulated at an SAA until 55 gallons of waste are accumulated [in accordance with 40 CFR 262.34(c)], then immediately transferred to a permitted hazardous waste storage facility prior to transport outside the Charleston Naval Complex for ultimate treatment or disposal. This SAA is located in the histology lab in Building NH-1.

Wastes are stored in 6-gallon cans. The floor surface is floor tile over concrete. The cans are in a ventilation hood. The SAA is located in the histology lab.

4.103.2 Waste Characteristics

Xylene, toluene and coating resin are stored.

4.103.3 Migration Pathways

Because this SAA is located inside Building NH-1, soil, groundwater, and surface waters are unlikely pathways. The floor in the vicinity of this SAA is free of cracks.

4.103.4 Evidence of Release

No spill reports, inspection reports, employee interviews or visual observations indicated spills at this unit.

4.103.5 Exposure Potential

This SAA is not close to any sensitive environments. Complex employees may be exposed to air emissions if the ventilation hood is not operating properly.

4.104 PAOC #101 — Satellite Accumulation Area, Building NH-1

4.104.1 Unit Characteristics

This SAA is an element of the Naval Shipyard hazardous waste management system. Hazardous wastes are accumulated at an SAA until 55 gallons of waste are accumulated [in accordance with 40CFR 262.34(c)], then immediately transferred to a permitted hazardous waste storage facility prior to transport outside the Charleston Naval Complex for ultimate treatment or disposal. This SAA is located in the cytology ward in Building NH-1.

Wastes are stored in a 4'x 3' ventilation hood. The floor surface is floor tile over concrete.

4.104.2 Waste Characteristics

Containers of alcohol, Hemo-DE, xylene, clarifier, bluing agent, Cyto-gain, henataxiplin, and Eosin-Y are stored.

4.104.3 Migration Pathways

Because this SAA is located inside Building NH-1, soil, groundwater, and surface waters are unlikely pathways. The floor in the vicinity of this SAA is free of cracks.

4.104.4 Evidence of Release

No spill reports, inspection reports, employee interviews or visual observations indicate spills at this SAA.

4.104.5 Exposure Potential

This SAA is not close to any sensitive environments. Naval Complex employees may be exposed to air emissions if the ventilation hood is not operating properly.

4.104.6 Recommended Action

No further investigation of this SAA is recommended due to the storage practices, lack of evidence of a release from this unit, and limited migration pathways.

4.105 PAOC #102 — Satellite Accumulation Area, Building 1175

4.105.1 Unit Characteristics

This SAA is an element of the Charleston Naval Shipyard hazardous waste management system. Hazardous wastes are accumulated at an SAA until 55 gallons of waste are accumulated [in accordance with 40 CFR 262.34(c)], then immediately transferred to a permitted hazardous waste storage facility prior to transport outside the Charleston Naval Complex for ultimate treatment or disposal. Figure 1-1 locates Building 1175 within the Complex.

Wastes are stored in closed 55-gallon drums. The floor surface is floor tile over concrete. No containment berm exists. Figure 4-100 locates the SAA within Building 1175.

4.105.2 Waste Characteristics

Empty oil cans, oily rags, and engine oil are stored.

4.105.3 Migration Pathways

Because this SAA is located inside Building 1175, soil, groundwater, and surface waters are unlikely pathways. The floor in the vicinity of this SAA is free of cracks.

4.105.4 Evidence of Release

No spill reports, inspection reports, employee interviews, or visual observations indicate spills at this SAA.

4.105.5 Exposure Potential

This SAA is not close to any residential areas. The Cooper River is approximately 900 feet from Building 1175. The design features of the unit, nature of waste (i.e. cans, rags), and lack of evidence of a release minimize the likelihood of potential exposures to Complex employees.

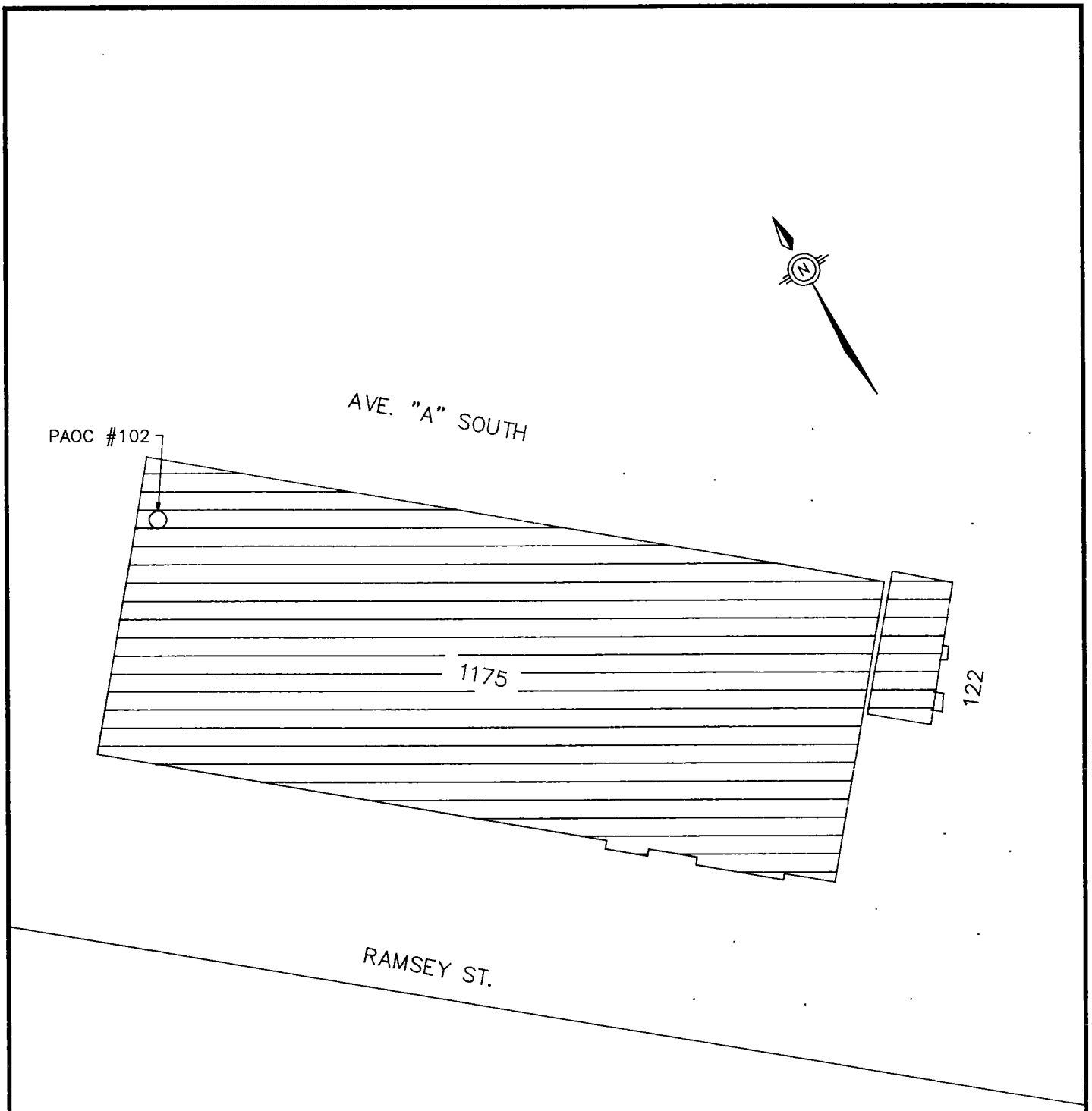

NOT TO SCALE

RCRA FACILITY
ASSESSMENT
NAVAL COMPLEX
CHARLESTON, S.C.

FIGURE 4-100
PAOC #102
BUILDING 1175, SAA

DWG DATE: 02/16/94 | DWG NAME: 29AOC102

4.105.6 Recommended Action

No further investigation of this SAA is recommended due to the nature of the waste ( ), storage practices, lack of evidence of a release from this unit, and limited migration pathways.

4.106 PAOC #103 — Satellite Accumulation Area, Building NS-67

4.106.1 Unit Characteristics

This SAA is an element of the Charleston Naval Shipyard hazardous waste management system. Hazardous wastes are accumulated at an SAA until 55 gallons of waste are accumulated [in accordance with 40 CFR 262.34(c)], then immediately transferred to a permitted hazardous waste storage facility prior to transport outside the Charleston Naval Complex for ultimate treatment or disposal. Figure 1-2 locates Building NS-67 within the Complex.

Wastes are stored in plastic bags on concrete. The SAA was locked behind steel doors at the time of the visual site inspection. Figure 4-101 locates the SAA in Building NS-67.

4.106.2 Waste Characteristics

Dry paint waste is stored. The major constituents of concern are heavy metals.

4.106.3 Migration Pathways

Because this SAA is located inside Building NS-67, soil, groundwater, and surface waters are unlikely pathways.

4.106.4 Evidence of Release

No spill reports, inspection reports, or employee interviews indicate spills at this SAA.

4.106.5 Exposure Potential

This SAA is not close to any residential areas. Wetlands exist approximately 1700 feet from Building NS-67. The design features of the unit and lack of evidence of a release minimize the likelihood of potential exposures to Complex employees.

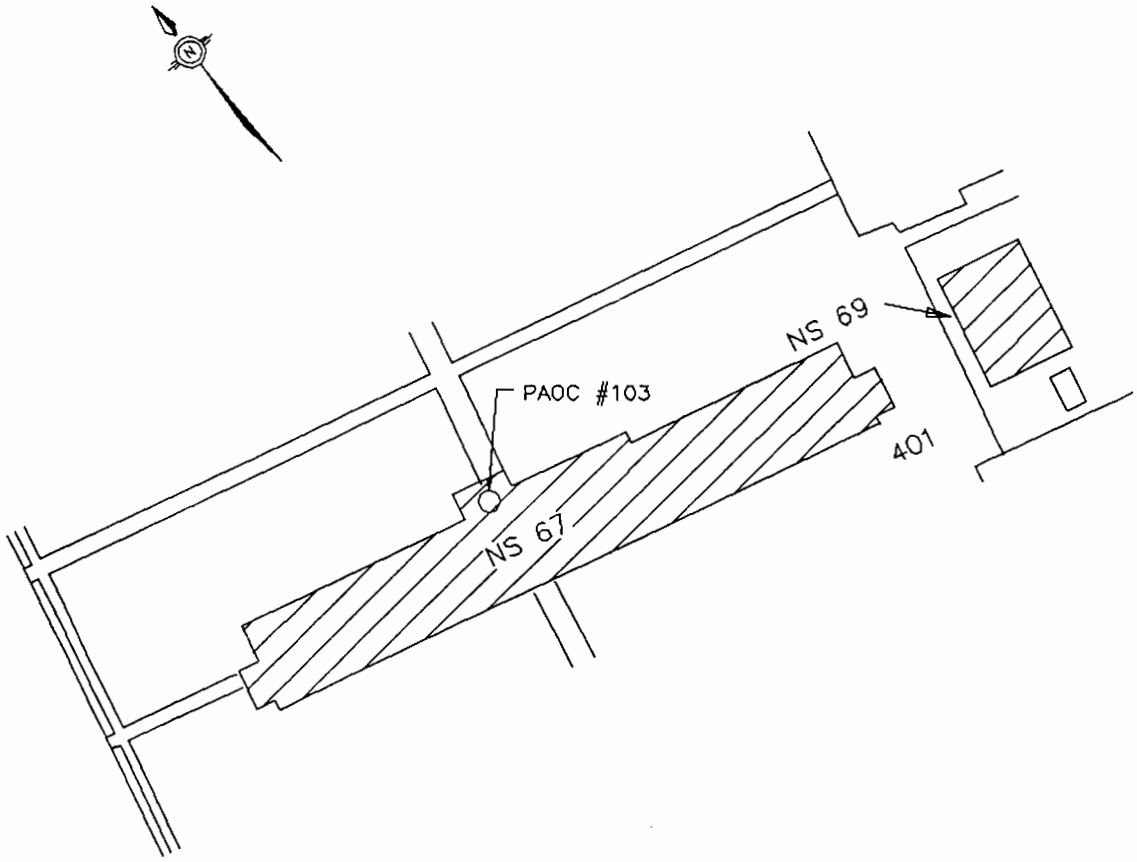

NOT TO SCALE

RCRA FACILITY
ASSESSMENT
NAVAL COMPLEX
CHARLESTON, S.C.

FIGURE 4-101
PAOC #103
BUILDING NS67, SAA

DWG DATE: 02/10/94 | DWG NAME: 27SNS67

4.106.6 Recommended Action

No further investigation of this SAA is recommended due to the lack of evidence of a release from this unit and limited migration pathways.

4.107 PAOC #104 — Satellite Accumulation Area, Building NH-1

4.107.1 Unit Characteristics

This SAA is an element of the Naval Shipyard hazardous waste management system. Hazardous wastes are accumulated at an SAA until 55 gallons of waste are accumulated [in accordance with 40CFR 262.34(c)], then immediately transferred to a permitted hazardous waste storage facility prior to transport outside the Charleston Naval Complex for ultimate treatment or disposal. This SAA was located in the dental ward on the third floor of Building NH-1.

4.107.2 Waste Characteristics

Sufficient information is not available to determine waste characteristics.

4.107.3 Migration Pathways

Because this SAA was located inside Building NH-1, soil, groundwater, and surface waters are unlikely pathways. The floor in the vicinity of this SAA is free of cracks.

4.107.4 Evidence of Release

No spill reports, inspection reports, employee interviews or visual observations indicate spills at this SAA.

4.107.5 Exposure Potential

This SAA is not close to any sensitive environments.

4.107.6 Recommended Action

No further investigation of this SAA is recommended due to the storage practices, lack of evidence of a release from this unit, and limited migration pathways.

4.108 PAOC #105 — Satellite Accumulation Area, Building FBM 61

4.108.1 Unit Characteristics

This SAA is an element of the Charleston Naval Shipyard hazardous waste management system. Hazardous wastes are accumulated at an SAA until 55 gallons of waste are accumulated [in accordance with 40 CFR 262.34(c)], then immediately transferred to a permitted hazardous waste storage facility prior to transport outside the Charleston Naval Complex for ultimate treatment or disposal. Figure 1-2 locates Building 61 within the Complex.

Wastes are stored in a 55-gallon closed drum, which is placed in a drip pan. The floor surface is floor tile over concrete. No containment berm exists. Figure 4-102 locates the SAA within Building FBM 61.

4.108.2 Waste Characteristics

Contaminated spill debris and lubricating oil are stored. The major constituents of concern are petroleum hydrocarbons.

4.108.3 Migration Pathways

Because this SAA is located inside Building FBM 61, soil, groundwater, and surface waters are unlikely pathways. The floor in the vicinity of this SAA is free of cracks.

4.108.4 Evidence of Release

No spill reports, inspection reports, employee interviews, or visual observations indicate spills at this SAA.

4.108.5 Exposure Potential

This SAA is not close to any residential areas. The Cooper River is approximately 1400 feet from Building 61. The design features of the unit and lack of spill evidence minimize the likelihood of potential exposures to Complex employees.

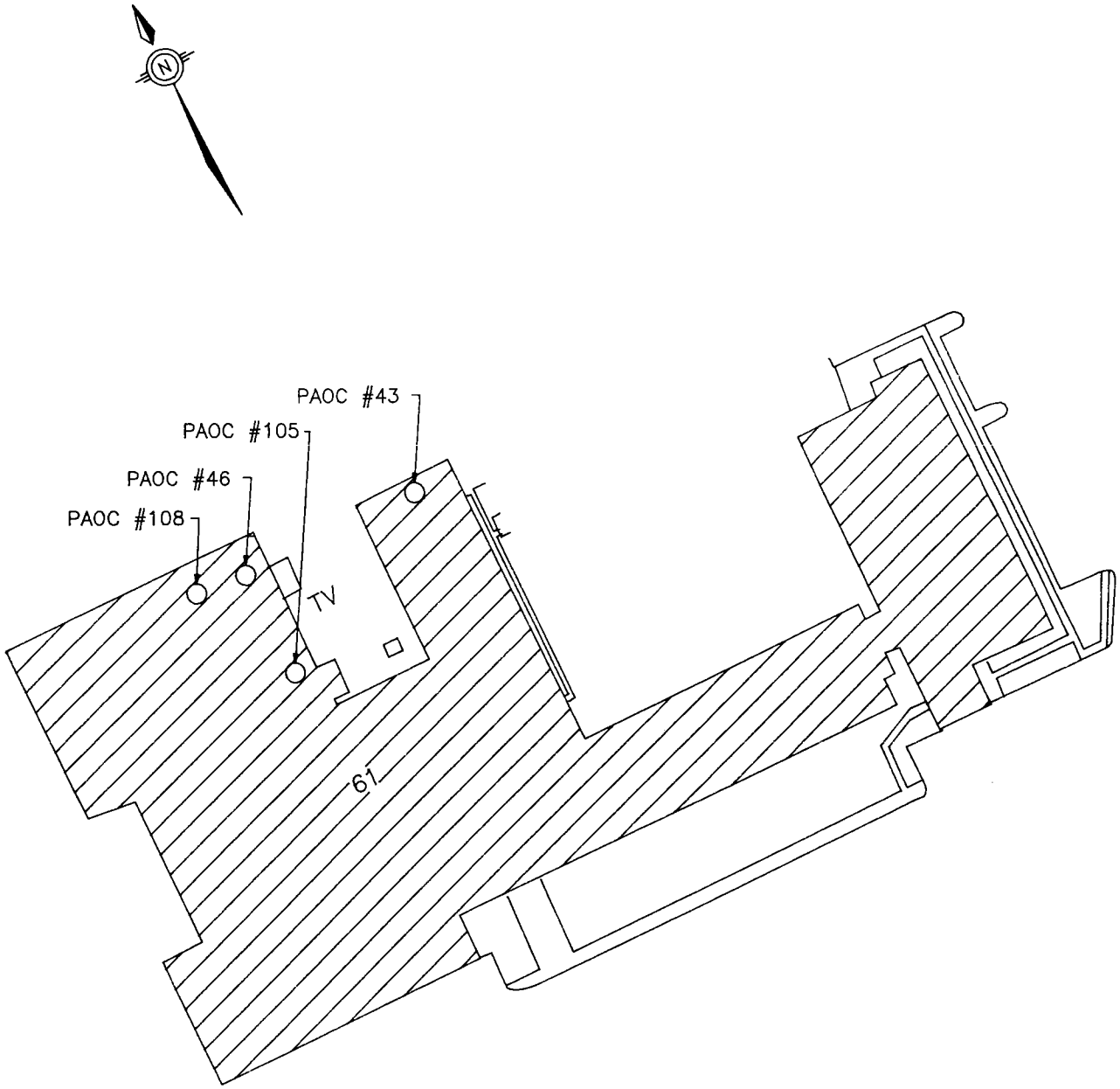

NOT TO SCALE

RCRA FACILITY
ASSESSMENT
NAVAL COMPLEX
CHARLESTON, S.C.

FIGURE 4-102
PAOC #105
BUILDING 61, SAA

DWG DATE: 02/16/94 | DWG NAME: 29AOC105

4.108.6 Recommended Action

No further investigation of this SAA is recommended due to the storage practices, lack of evidence of a release from this unit, and limited migration pathways.

4.109 PAOC #106 — Satellite Accumulation Area, Building 177

4.109.1 Unit Characteristics

This SAA is an element of the Charleston Naval Shipyard hazardous waste management system. Hazardous wastes are accumulated at an SAA until 55 gallons of waste are accumulated [in accordance with 40 CFR 262.34(c)], then immediately transferred to a permitted hazardous waste storage facility prior to transport outside the Charleston Naval Complex for ultimate treatment or disposal. Figure 1-1 locates Building 177 within the Complex.

Wastes are stored in 55-gallon drums, 1- and 5-gallon cans, and plastic bags, all of which are on pallets. The floor surface is floor tile overlying concrete. No containment berm exists. Figure 4-103 locates the SAA within Building 177.

4.109.2 Waste characteristics

Empty paint and aerosol cans, used paint rollers and brushes, rags, spent Stoddard solvent, spent xylene, empty grease and lube oil cans, varsol solvent, gasket adhesive tubes, petroleum preservatives, and empty Plastikote containers (acetone, methyl ethyl ketone, and toluene) are stored.

4.109.3 Migration Pathways

Because this SAA is located inside Building 177, soil, groundwater, and surface waters are unlikely pathways. The floor in the vicinity of this SAA is free of cracks.

4.109.4 Evidence of Release

No spill reports, inspection reports, employee interviews, or visual observations indicate spills at this SAA.

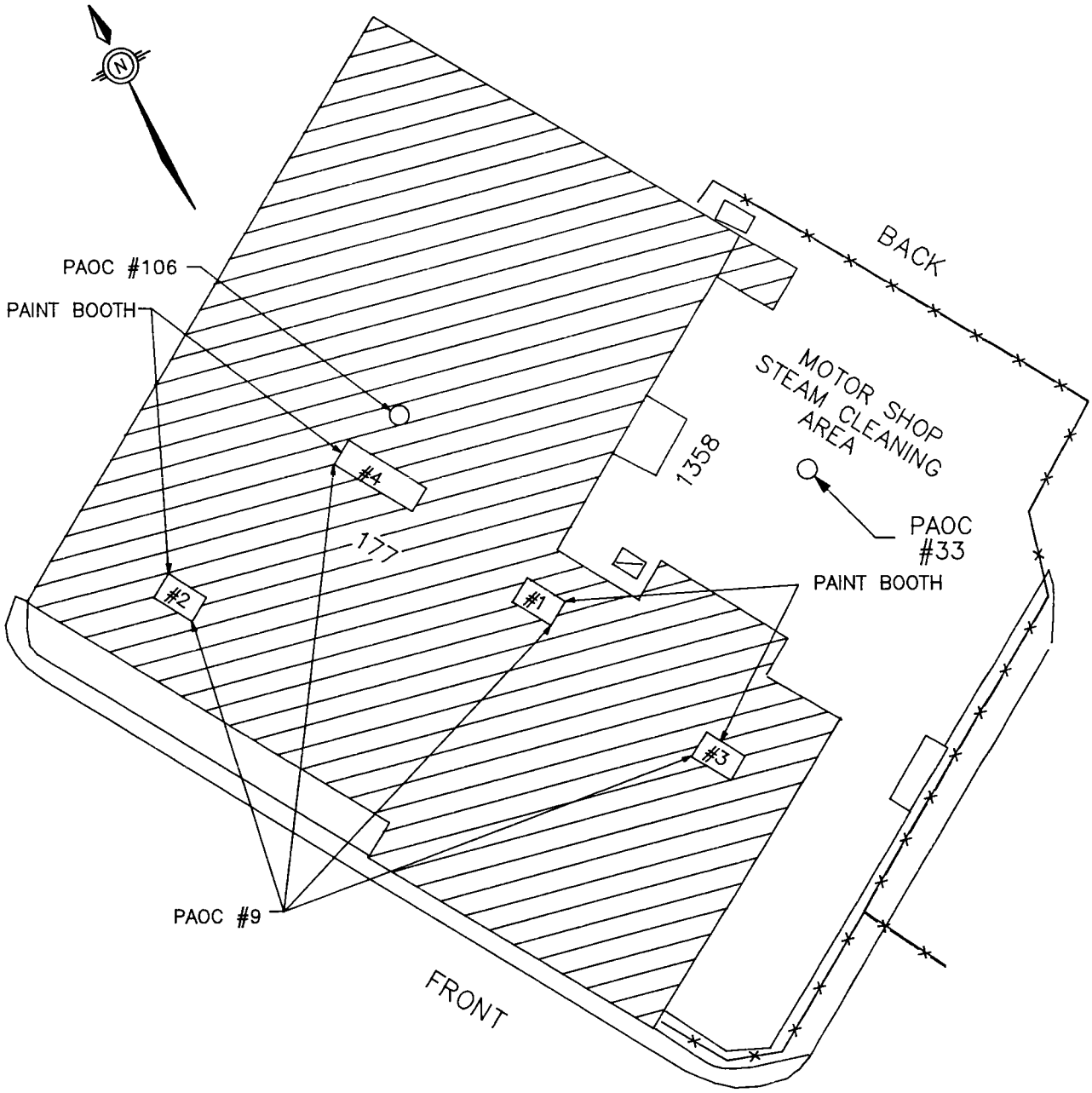

NOT TO SCALE

RCRA FACILITY
ASSESSMENT
NAVAL COMPLEX
CHARLESTON, S.C.

FIGURE 4-103
PAOC #106
BUILDING 177, SAA

DWG DATE: 02/16/94 | DWG NAME: 29AOC106

4.109.5 Exposure Potential

This SAA is not close to any residential areas or sensitive environments. The storage capacity and lack of evidence of any major releases minimizes the potential exposures to Complex employees.

4.109.6 Recommended Action

No further investigation of this SAA is recommended due to storage practices, lack of evidence of a release from this unit, and limited migration pathways.

4.110 PAOC #107 — Satellite Accumulation Area, Building 44

4.110.1 Unit Characteristics

This SAA is an element of the Charleston Naval Shipyard hazardous waste management system. Hazardous wastes are accumulated at an SAA until 55 gallons of waste are accumulated [in accordance with 40 CFR 262.34(c)], then immediately transferred to a permitted hazardous waste storage facility prior to transport outside the Charleston Naval Complex for ultimate treatment or disposal. Figure 1-1 locates Building 44 within the Complex.

Wastes are stored in closed 6-gallon metal containers. The floor surface is floor tile overlying concrete. No containment berm exists. Figure 4-104 locates the SAA within Building 44.

4.110.2 Waste Characteristics

Oily rags, cutting oil (Kaltenbach 2000), and rags with metal shavings are stored. The major constituents of concern are heavy metals and petroleum hydrocarbons.

4.110.3 Migration Pathways

Because this SAA is located inside Building 44, soil, groundwater, and surface waters are unlikely pathways. The floor in the vicinity of this SAA is free of cracks.

4.110.4 Evidence of Release

No spill reports, inspection reports, employee interviews, or visual observations indicate spills at this SAA.

4.110.5 Exposure Potential

This SAA is not close to any residential areas or sensitive environments. The limited storage capacity and lack of evidence of a major release minimize the potential exposures to Complex employees.

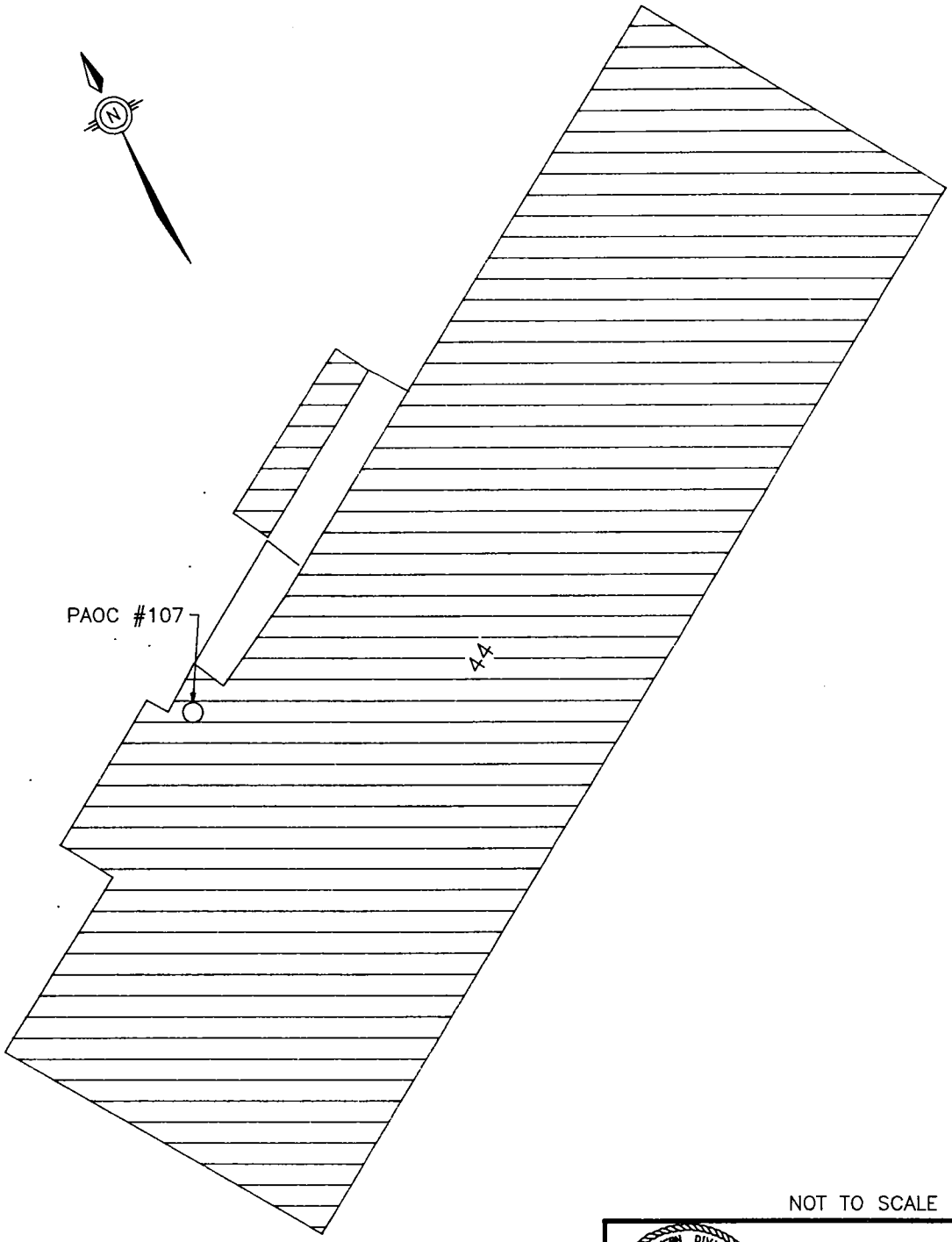

NOT TO SCALE

RCRA FACILITY
ASSESSMENT
NAVAL COMPLEX
CHARLESTON, S.C.

FIGURE 4-104
PAOC #107
BUILDING 44, SAA

DWG DATE: 02/16/94 | DWG NAME: 29AOC107

4.110.6 Recommended Action

No further investigation of this SAA is recommended due to the limited storage capacity, storage practices, lack of evidence of a release from this unit, and limited migration pathways.

4.111 PAOC #108 — Satellite Accumulation Area, Building FBM 61

4.111.1 Unit Characteristics

This SAA is an element of the Charleston Naval Shipyard hazardous waste management system. Hazardous wastes are accumulated at an SAA until 55 gallons of waste are accumulated [in accordance with 40 CFR 262.34(c)], then immediately transferred to a permitted hazardous waste storage facility prior to transport outside the Charleston Naval Complex for ultimate treatment or disposal. Figure 1-2 locates Building 61 within the Complex.

Wastes are stored in a 2-gallon closed plastic containers. The floor surface is floor tile overlying concrete. No containment berm exists. Figure 4-105 locates the SAA within Building FBM 61.

4.111.2 Waste Characteristics

An oil/refrigerant mixture is stored.

4.111.3 Migration Pathways

Because this SAA is located inside Building FBM 61, soil, groundwater, and surface waters are unlikely pathways. The floor in the vicinity of this SAA is free of cracks.

4.111.4 Evidence of Release

No spill reports, inspection reports, employee interviews, or visual observations indicate spills at this SAA.

4.111.5 Exposure Potential

This SAA is not in close proximity to any residential areas or sensitive environments. The limited storage capacity and lack of spill evidence minimizes the potential exposures to Complex employees.

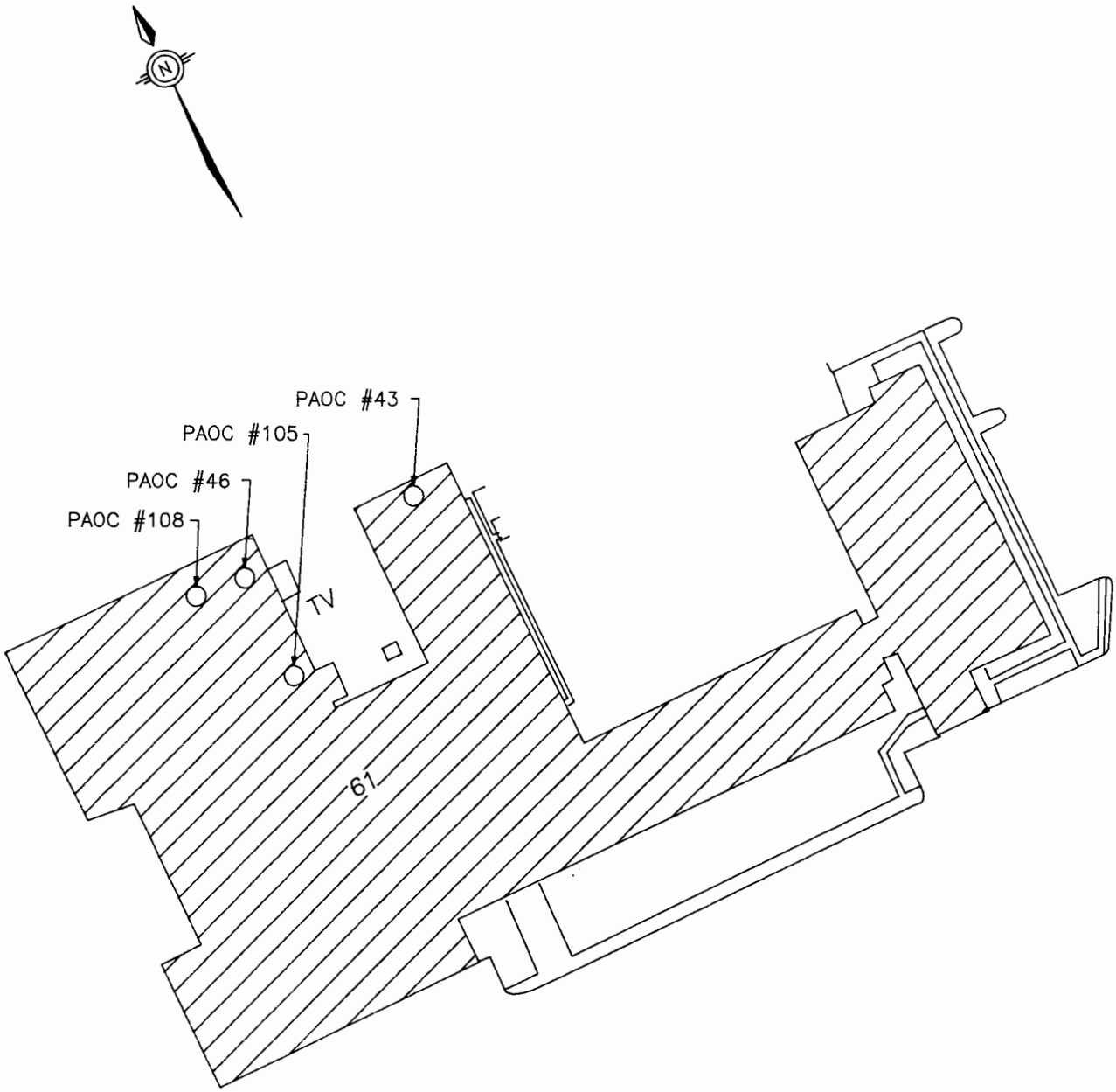

NOT TO SCALE

RCRA FACILITY
ASSESSMENT
NAVAL COMPLEX
CHARLESTON, S.C.

FIGURE 4-105
PAOC #108
BUILDING 61, SAA

DWG DATE: 02/16/94 | DWG NAME: 29AOC108

4.111.6 Recommended Action

No further investigation of this SAA is recommended due to the limited storage capacity, storage practices, lack of evidence of a release from this unit, and limited migration pathways.

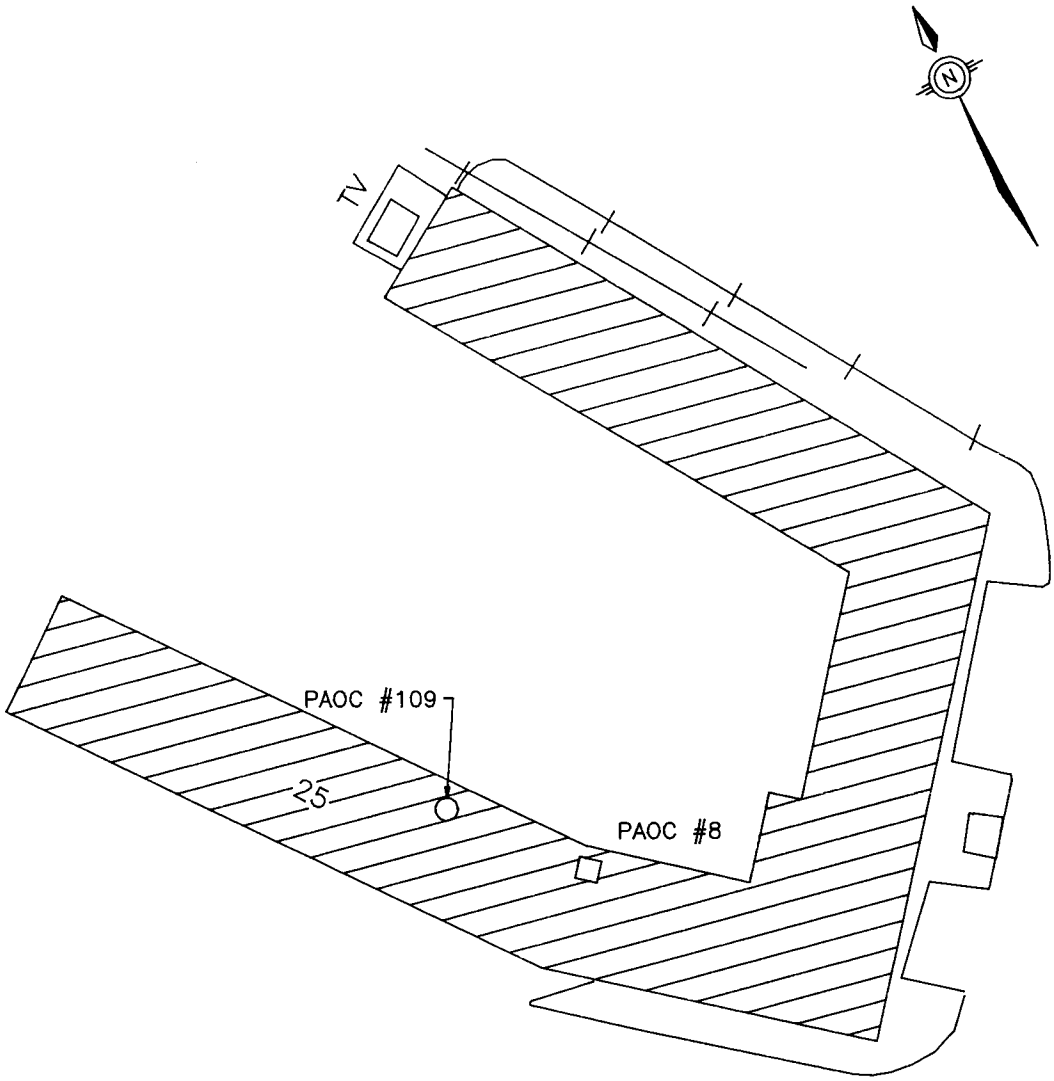

NOT TO SCALE

RCRA FACILITY
ASSESSMENT
NAVAL COMPLEX
CHARLESTON, S.C.

FIGURE 4-106
PAOC #109
BUILDING 25, PAINT BOOTH

DWG DATE: 02/16/94 | DWG NAME: 29AOC109

4.112.6 Recommended Action

No further investigation of this SAA is recommended due to the nature of the waste (empty containers and rags), storage practices, lack of evidence of a release from this unit, and limited migration pathways.

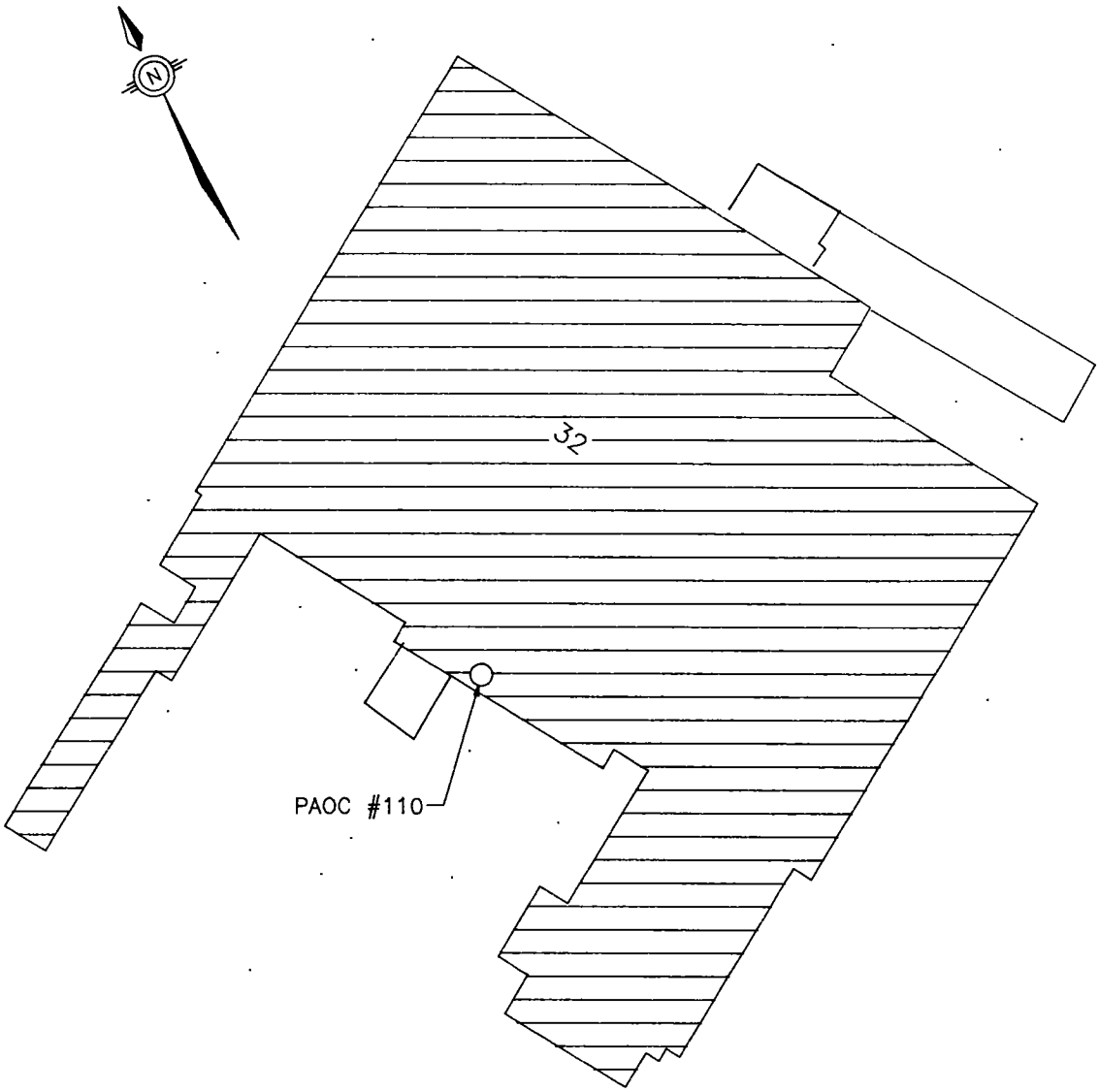

NOT TO SCALE

RCRA FACILITY
ASSESSMENT
NAVAL COMPLEX
CHARLESTON, S.C.

FIGURE 4-107
PAOC #110
BUILDING 32, SAA

DWG DATE: 02/16/94 | DWG NAME: 29AOC110

4.113.6 Recommended Action

No further investigation of this SAA is recommended due to the storage practices, lack of evidence of a release from this unit, and limited migration pathways.

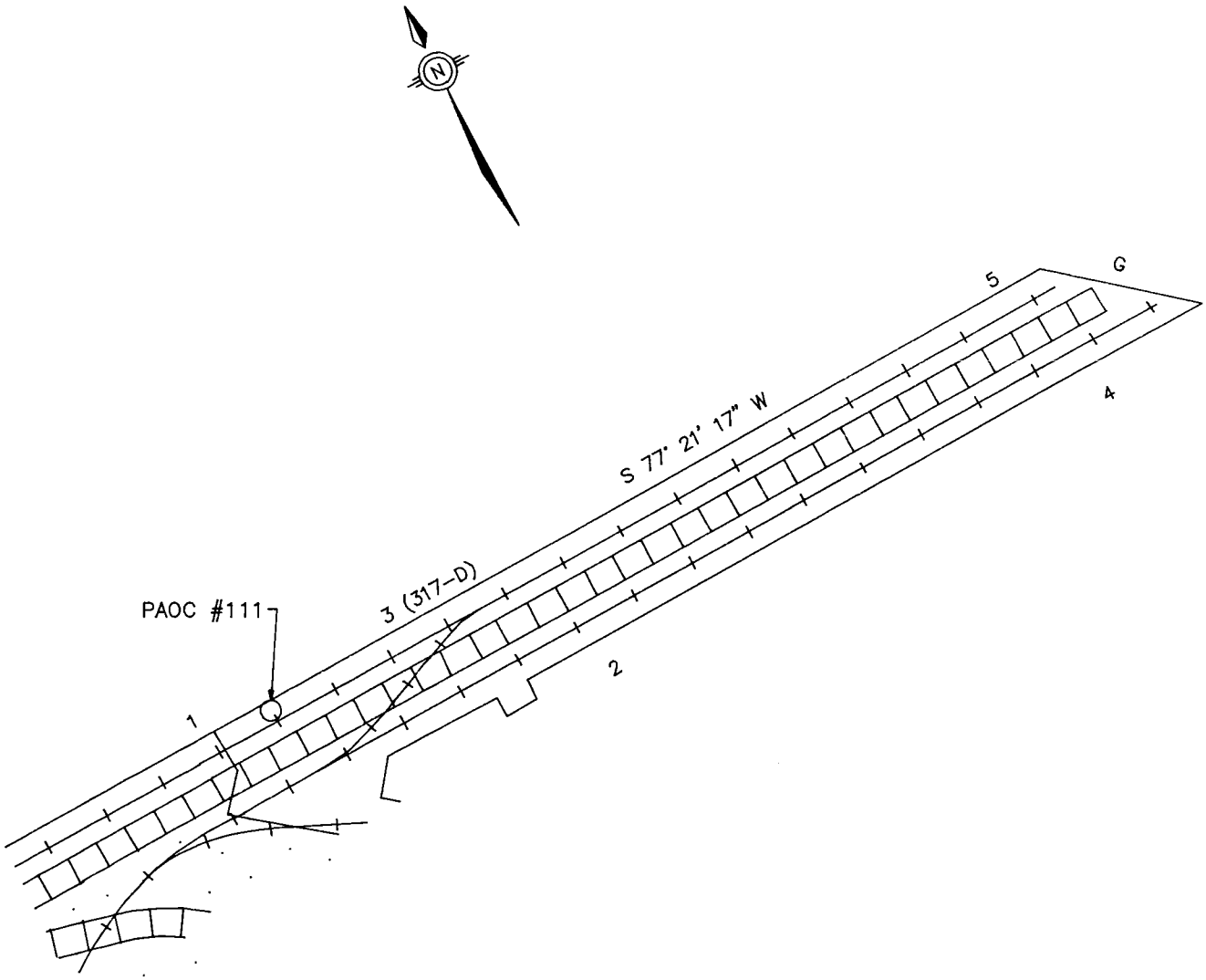

NOT TO SCALE

RCRA FACILITY
ASSESSMENT
NAVAL COMPLEX
CHARLESTON, S.C.

FIGURE 4-108
PAOC #111
PIER G, SAA

DWG DATE: 02/10/94 | DWG NAME: 29AOC111

4.114.6 Recommended Action

The Cooper River will be investigated as a separate unit and any releases from this unit would have entered the Cooper River. No further action is recommended for this PAOC.

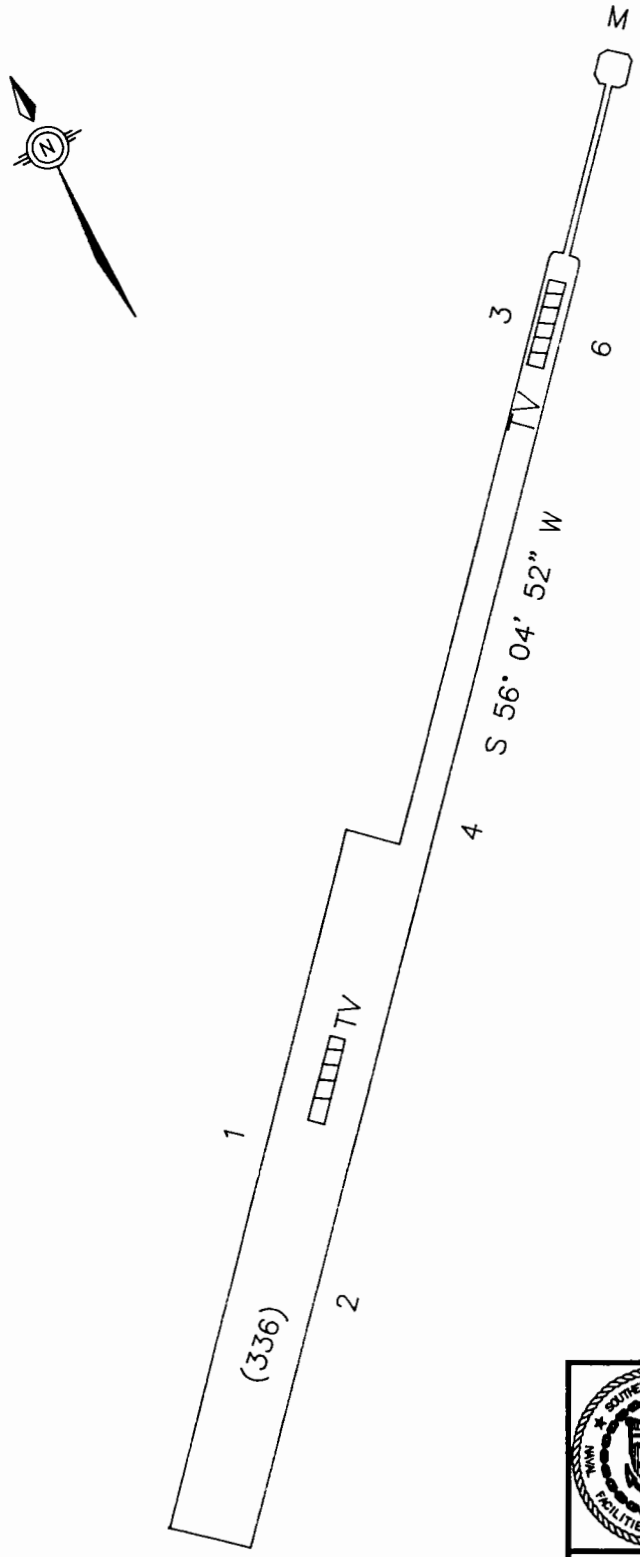

NOT TO SCALE

RCRA FACILITY
ASSESSMENT
NAVAL COMPLEX
CHARLESTON, S.C.

FIGURE 4-109
PAOC #112
PIER M, SAA

DWG DATE: 02/16/94 | DWG NAME: 29AOC112

NOTE: THE EXACT LOCATION OF PAOC #112 IS NOT KNOWN.

4.116 PAOC #113 — Satellite Accumulation Area, Building 810

4.116.1 Unit Characteristics

This SAA is an element of the Charleston Naval Shipyard hazardous waste management system. Hazardous wastes are accumulated at an SAA until 55-gallons of waste are accumulated [in accordance with 40 CFR 262.34(c)], then immediately transferred to a permitted hazardous waste storage facility prior to transport outside the Charleston Naval Complex for ultimate treatment or disposal. Figure 1-1 locates Building 810 within the Complex.

The SAA is an 8'x 8' sheet metal building with a concrete floor. Inside, aerosol paint cans are punctured and the paint is collected in a 55-gallon drum. A separate drum is used for storage of used oil. Used automobile batteries are stored on wooden pallets. No containment berm exists. Figure 4-110 locates the SAA with respect to Building 810.

4.116.2 Waste Characteristics

Used oil and contents from punctured aerosol cans (e.g., paint) are stored. The major constituents of concern are volatile organic compounds, metals, and petroleum hydrocarbons.

4.116.3 Migration Pathways

This SAA is located outside of Building 810; therefore, surface migration from surface runoff may occur. Because the ground surface is gravel outside of the SAA metal building, soil and groundwater may also be migration pathways.

4.116.4 Evidence of Release

No spill reports, inspection reports or employee interviews indicate spills at this SAA. However, water puddles were evident of the floor of the SAA during the visual site inspection.

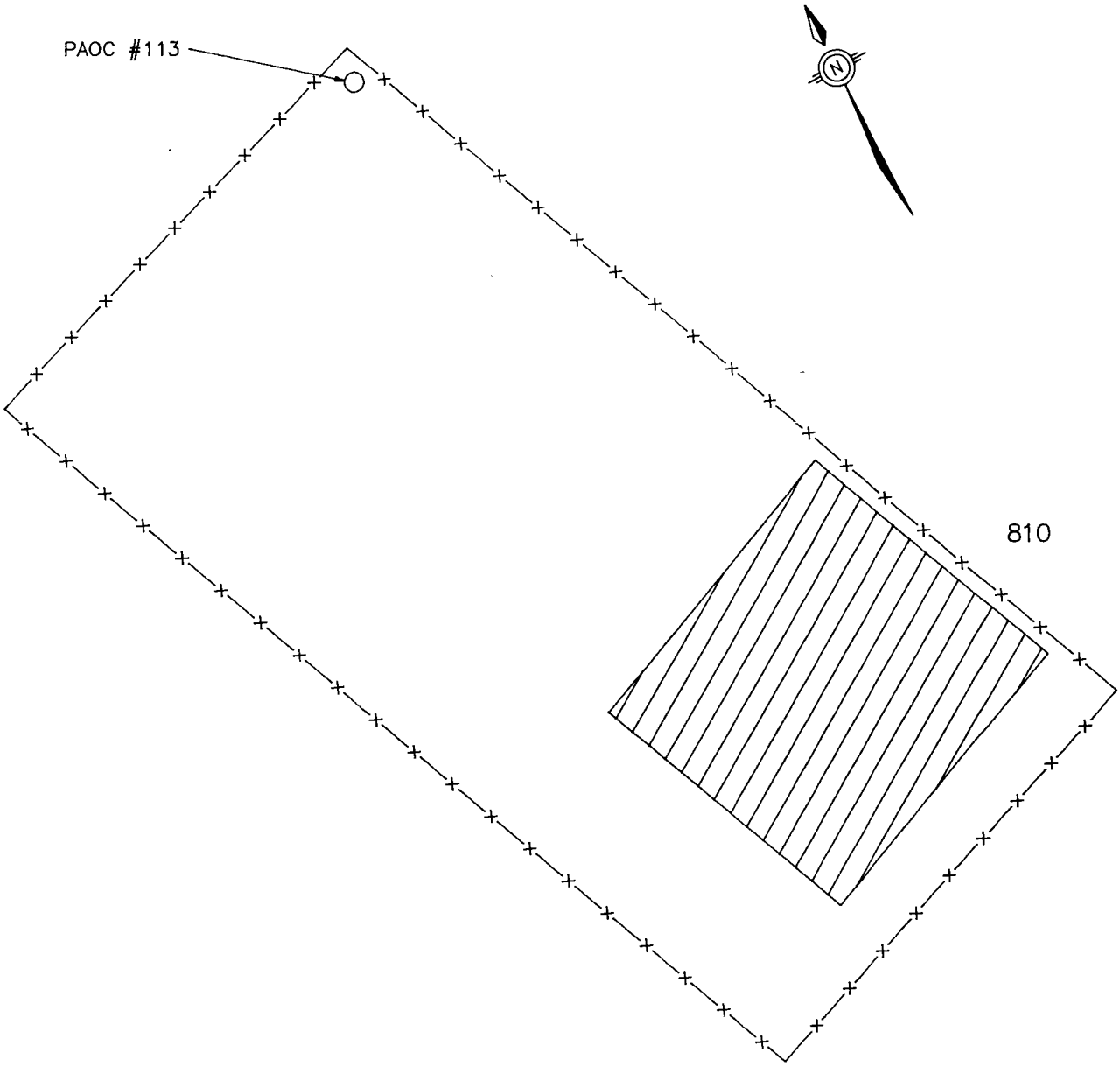

NOT TO SCALE

RCRA FACILITY
ASSESSMENT
NAVAL COMPLEX
CHARLESTON, S.C.

FIGURE 4-110
PAOC #113
BUILDING 810, SAA

DWG DATE: 02/16/94 | DWG NAME: 29AOC113

4.116.5 Exposure Potential

This SAA is in a remote area near the southern perimeter of the Charleston Naval Complex. Therefore, human exposure is limited to Complex employees who occasionally work at Building 810. Those employees are subject to exposure to volatile organic compounds, particularly during the aerosol paint can puncturing operations. Shipyard Creek is within 300 feet of Building 810, across Least Tern Lane. Wetlands (the area south of Least Tern Lane, along Shipyard Creek) are nearby.

4.116.6 Recommended Action

The PAOC is within the boundary of SWMU #9, which is being investigated in the RFI. PAOC #113 should be incorporated into the SWMU #9 investigation.

4.117 PAOC #114 — Satellite Accumulation Area, Pier H

4.117.1 Unit Characteristics

This SAA is an element of the Charleston Naval Shipyard hazardous waste management system. Hazardous wastes are accumulated at an SAA until 55-gallons of waste are accumulated [in accordance with 40 CFR 262.34(c)], then immediately transferred to a permitted hazardous waste storage facility prior to transport outside the Charleston Naval Complex for ultimate treatment or disposal. This SAA was located on Pier H. Figure 1-1 locates Pier H within the Complex.

4.117.2 Waste Characteristics

Sufficient information is not available to determine waste characteristics.

4.117.3 Migration Pathways

Because this SAA was located on the pier, surface migration from surface runoff may have occurred. The Cooper River is in the immediate vicinity of the pier.

4.117.4 Evidence of Release

No spill reports, inspection reports, or employee interviews indicate spills at this SAA.

4.117.5 Exposure Potential

The pier is not close to any residential areas; however, it is located near the Cooper River, which might have been impacted if a spill occurred.

4.117.6 Recommended Action

This SAA is no longer operational. Per 40 CFR 262.34(a)(1), certification of closure is required in accordance with 40 CFR 265.111 and 114.

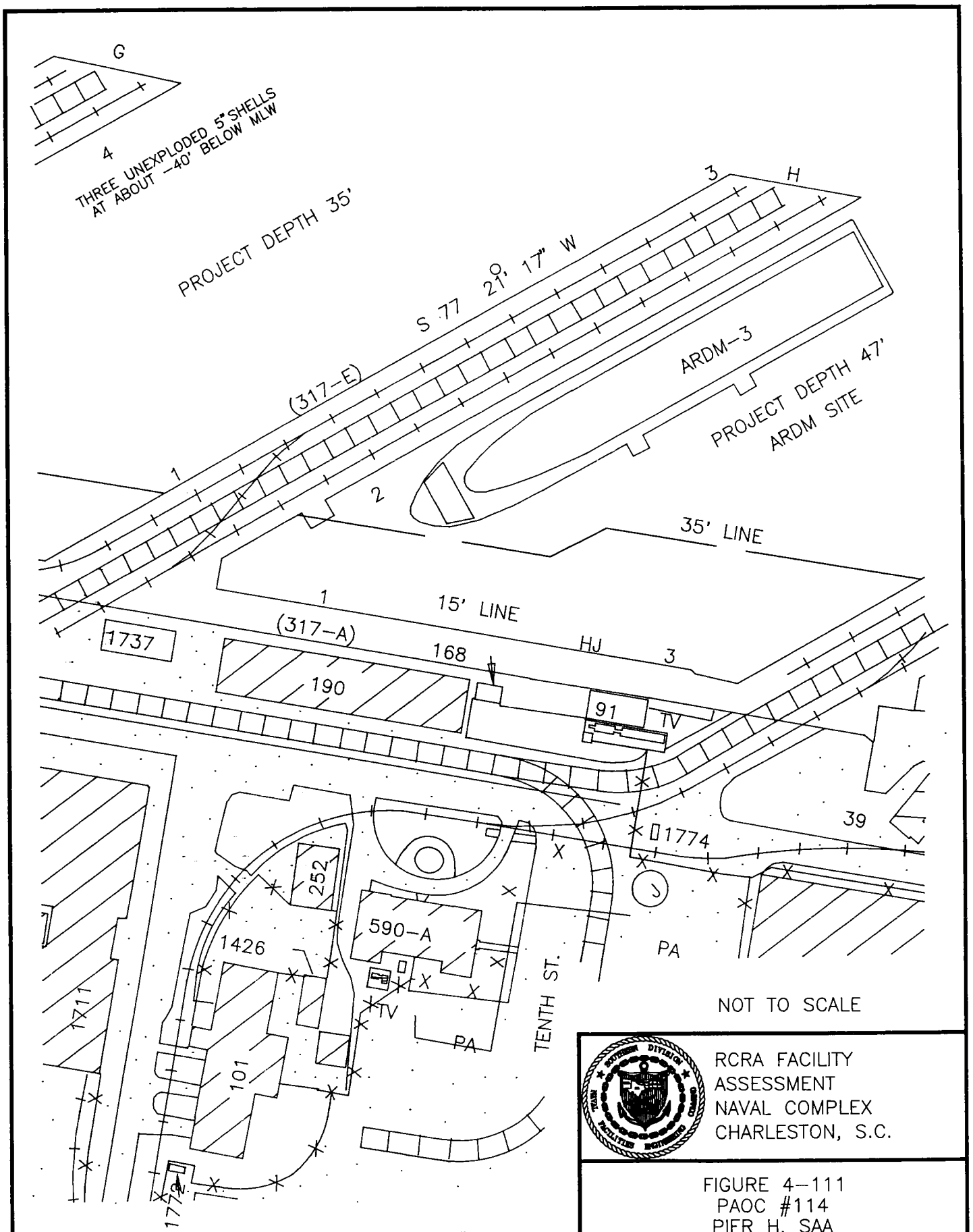

NOTE: THE EXACT LOCATION OF PAOC #114 IS NOT KNOWN.

RCRA FACILITY ASSESSMENT
NAVAL COMPLEX
CHARLESTON, S.C.

FIGURE 4-111
PAOC #114
PIER H, SAA

DWG DATE: 02/16/94 | DWG NAME: 29AOC114

4.118 PAOC #115 — Satellite Accumulation Area, Drydock Number 1

4.118.1 Unit Characteristics

This SAA is an element of the Charleston Naval Shipyard hazardous waste management system. Hazardous wastes are accumulated at an SAA until 55-gallons of waste are accumulated [in accordance with 40 CFR 262.34(c)], then immediately transferred to a permitted hazardous waste storage facility prior to transport outside the Charleston Naval Complex for ultimate treatment or disposal. Figure 1-1 locates Drydock Number 1 within the Complex and Figure 4-112 locates the SAA on the drydock.

Wastes are stored in closed 55-gallon drums, which are on a steel frame structure. The floor surface is asphalt. No containment berm exists. Figure 4-118 locates the SAA on the drydock.

4.118.2 Waste Characteristics

Hydraulic oil-soaked rags are stored at this SAA. The major constituents of concern are petroleum hydrocarbons.

4.118.3 Migration Pathways

Because this SAA is located on the drydock, surface migration from surface runoff may occur. The Cooper River is approximately 25 feet from this SAA.

4.118.4 Evidence of Release

No spill reports, inspection reports, employee interviews, or physical evidence indicate spills at this unit.

4.118.5 Exposure Potential

The site is not close to any residential areas; however, it is located near the Cooper River, which might be impacted should a spill occur.

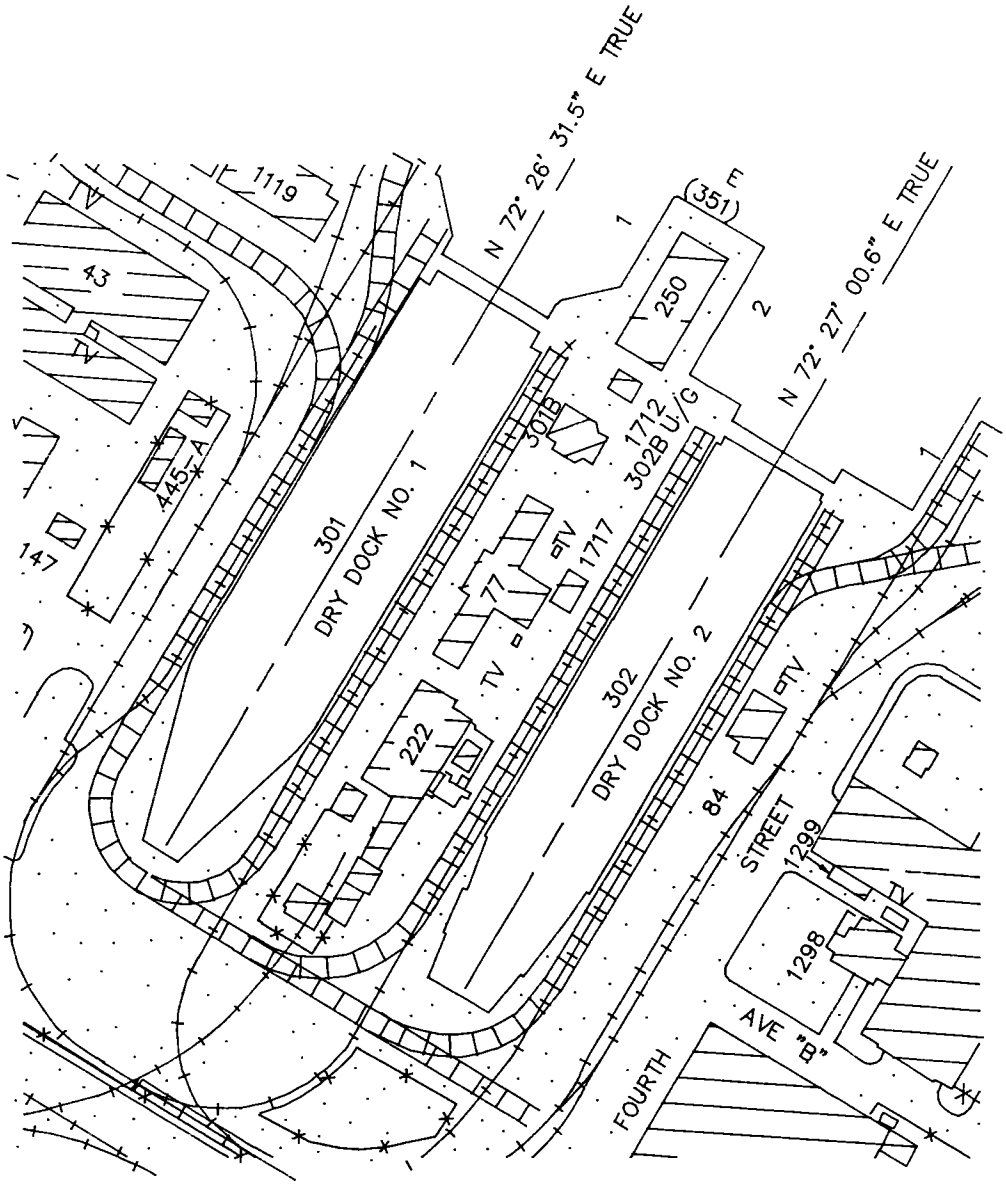

NOTE: THE EXACT LOCATION OF PAOC #115 IS UNKNOWN

NOT TO SCALE

RCRA FACILITY ASSESSMENT
NAVAL COMPLEX
CHARLESTON, S.C.

FIGURE 4-112
PAOC #115
DD #1, SAA

DWG DATE: 02/16/94 | DWG NAME: 29AOC115

4.118.7 Recommended Action

The drydock discharges will be investigated as a separate unit. Any releases from this unit would have entered the Cooper River. No further action is recommended for this PAOC.

4.119 PAOC #116 — Temporary Satellite Accumulation Area, Pier Q

4.119.1 Unit Characteristics

This SAA is an element of the Charleston Naval Shipyard hazardous waste management system. Hazardous wastes are accumulated at an SAA until 55 gallons of waste are accumulated [in accordance with 40 CFR 262.34(c)], then immediately transferred to a permitted hazardous waste storage facility prior to transport outside the Charleston Naval Complex for ultimate treatment or disposal. This SAA is no longer operational. Figure 1-2 locates Pier Q within the Complex. Figure 4-113 locates the former position of the SAA on the pier.

4.119.2 Waste Characteristics

Empty paint cans and liquid paint wastes are stored at this temporary SAA. The major constituents of concern are volatile organic compounds and metals.

4.119.3 Migration Pathways

Due to the proximity of the Cooper River, surface water may be a migration pathway.

4.119.4 Evidence of Release

Sufficient information is not available to determine evidence of release.

4.119.5 Exposure Potential

This SAA is not in close proximity to any residential areas. The Cooper River, however, is in the immediate vicinity of the Pier, and may be impacted if a release occurs.

4.119.6 Recommended Action

This SAA is no longer operational. Per 40 CFR 262.34(a)(1), certification of closure is required in accordance with 40 CFR 265.111 and 114.

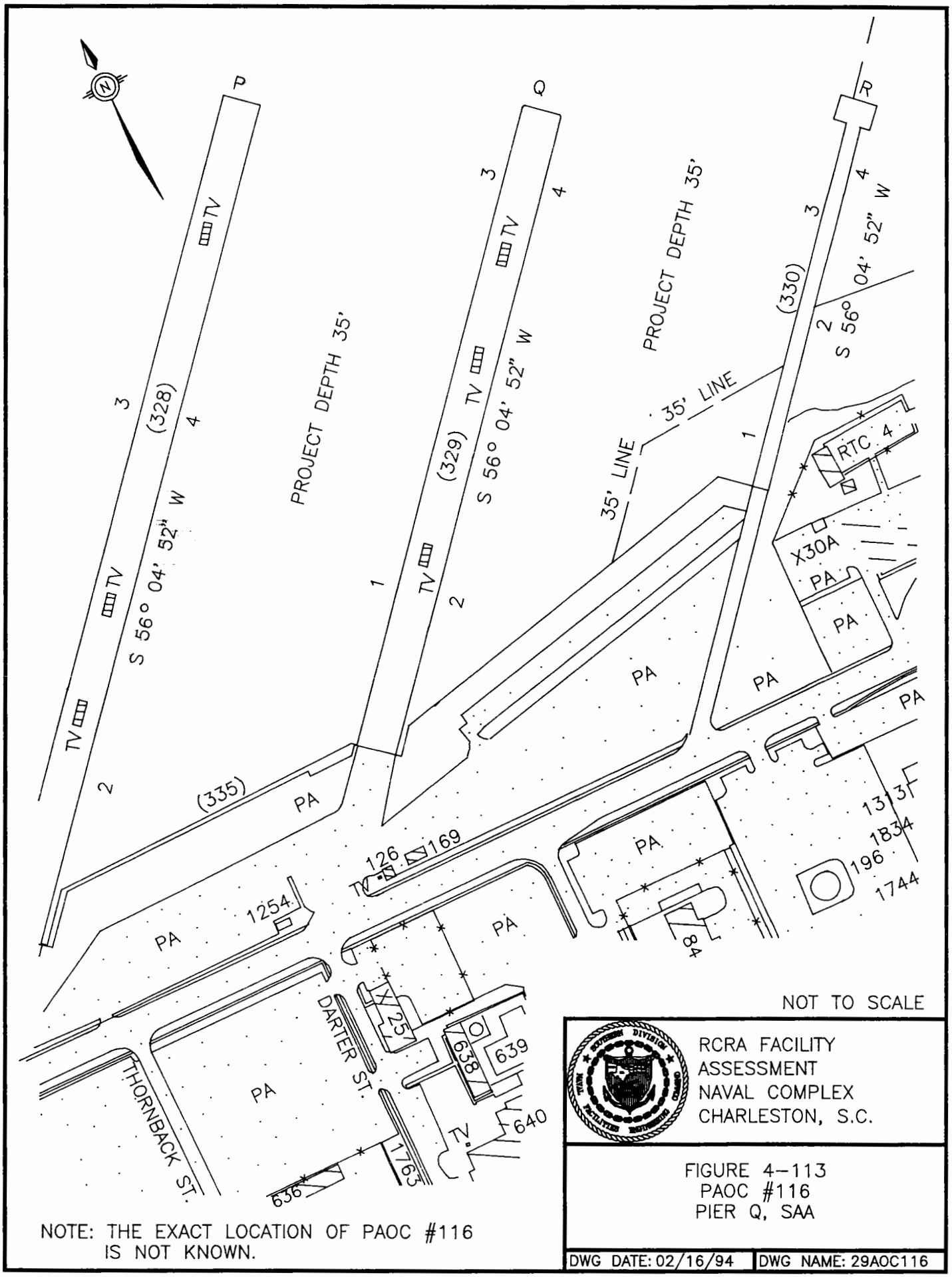

NOTE: THE EXACT LOCATION OF PAOC #116 IS NOT KNOWN.

4.120 PAOC #117 — Temporary Satellite Accumulation Area, Building NH-21

4.120.1 Unit Characteristics

This SAA is an element of the Charleston Naval Shipyard hazardous waste management system. Hazardous wastes are accumulated at an SAA until 55 gallons of waste are accumulated [in accordance with 40 CFR 262.34(c)], then immediately transferred to a permitted hazardous waste storage facility prior to transport outside the Charleston Naval Complex for ultimate treatment or disposal. This SAA is no longer operational. Figure 1-1 locates Building NH-21 within the Complex. Figure 4-114 locates the former position of the SAA within Building NH-21.

4.120.2 Waste Characteristics

Lead paint removal debris was stored at this SAA. The major constituents of concern are volatile organic compounds and metals.

4.120.3 Migration Pathways

Sufficient information is not available to determine migration pathways.

4.120.4 Evidence of Release

Sufficient information is not available to determine evidence of release.

4.120.5 Exposure Potential

This SAA is not in close proximity to any residential areas or other sensitive environments.

4.120.6 Recommended Action

This SAA is no longer operational. Per 40 CFR 262.34(a)(1), certification of closure is required in accordance with 40 CFR 265.111 and 114.

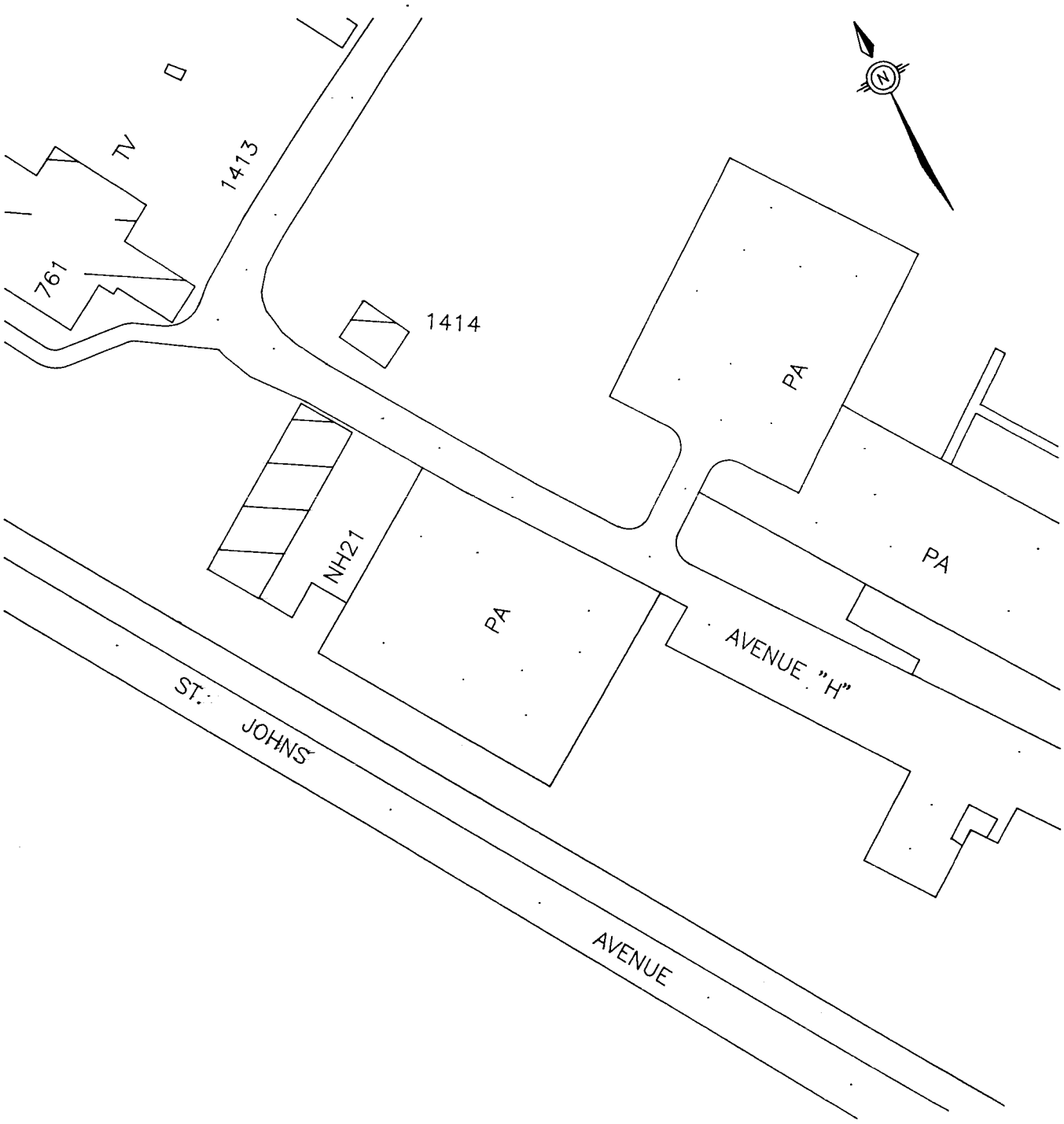

NOTE: THE EXACT LOCATION OF PAOC #117 IS NOT KNOWN.

NOT TO SCALE

RCRA FACILITY ASSESSMENT
NAVAL COMPLEX
CHARLESTON, S.C.

FIGURE 4-114
PAOC #117
NH-21, SAA

DWG DATE: 02/16/94 | DWG NAME: 29AOC117

4.121 PAOC #118 — Temporary Satellite Accumulation Area, CBU-412 Chapel

4.121.1 Unit Characteristics

This SAA is an element of the Naval Shipyard hazardous waste management system. Hazardous wastes are accumulated at an SAA until 55 gallons of waste are accumulated [in accordance with 40 CFR 262.34(c)], then immediately transferred to a permitted hazardous waste storage facility prior to transport outside the Charleston Naval Complex for ultimate treatment or disposal. This temporary SAA is closed. This SAA is no longer operational. Figure 1-1 locates the chapel within the Complex. Figure 4-115 locates the SAA within the chapel.

4.121.2 Waste Characteristics

Lead paint removal debris was stored. The major constituents of concern are volatile organic compounds and metals.

4.121.3 Migration Pathways

Sufficient information is not available to determine migration pathways.

4.121.4 Evidence of Release

Sufficient information is not available to determine evidence of release.

4.121.5 Exposure Potential

This SAA was not close to any residential areas.

4.121.6 Recommended Action

This SAA is no longer operational. Per 40 CFR 262.34(a)(1), certification of closure is required in accordance with 40 CFR 265.111 and 114.

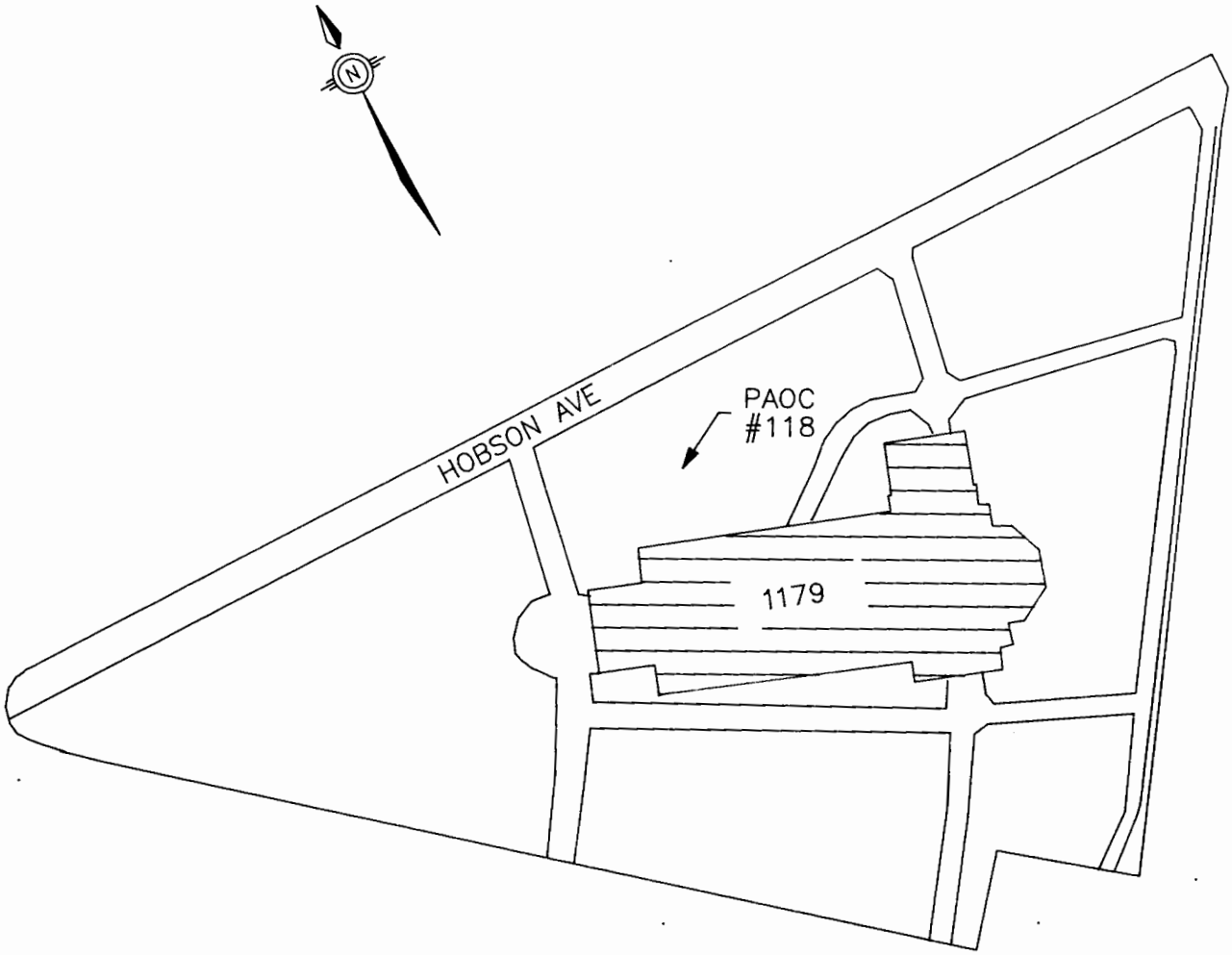

NOT TO SCALE

NOTE: THE EXACT LOCATION OF
PAOC #118 IS NOT KNOWN

RCRA FACILITY
ASSESSMENT
NAVAL COMPLEX
CHARLESTON, SC

FIGURE 4-115
PAOC #118
CBU 412, SAA

DWG DATE: 01/14/94 | DWG NAME: 29AOC118

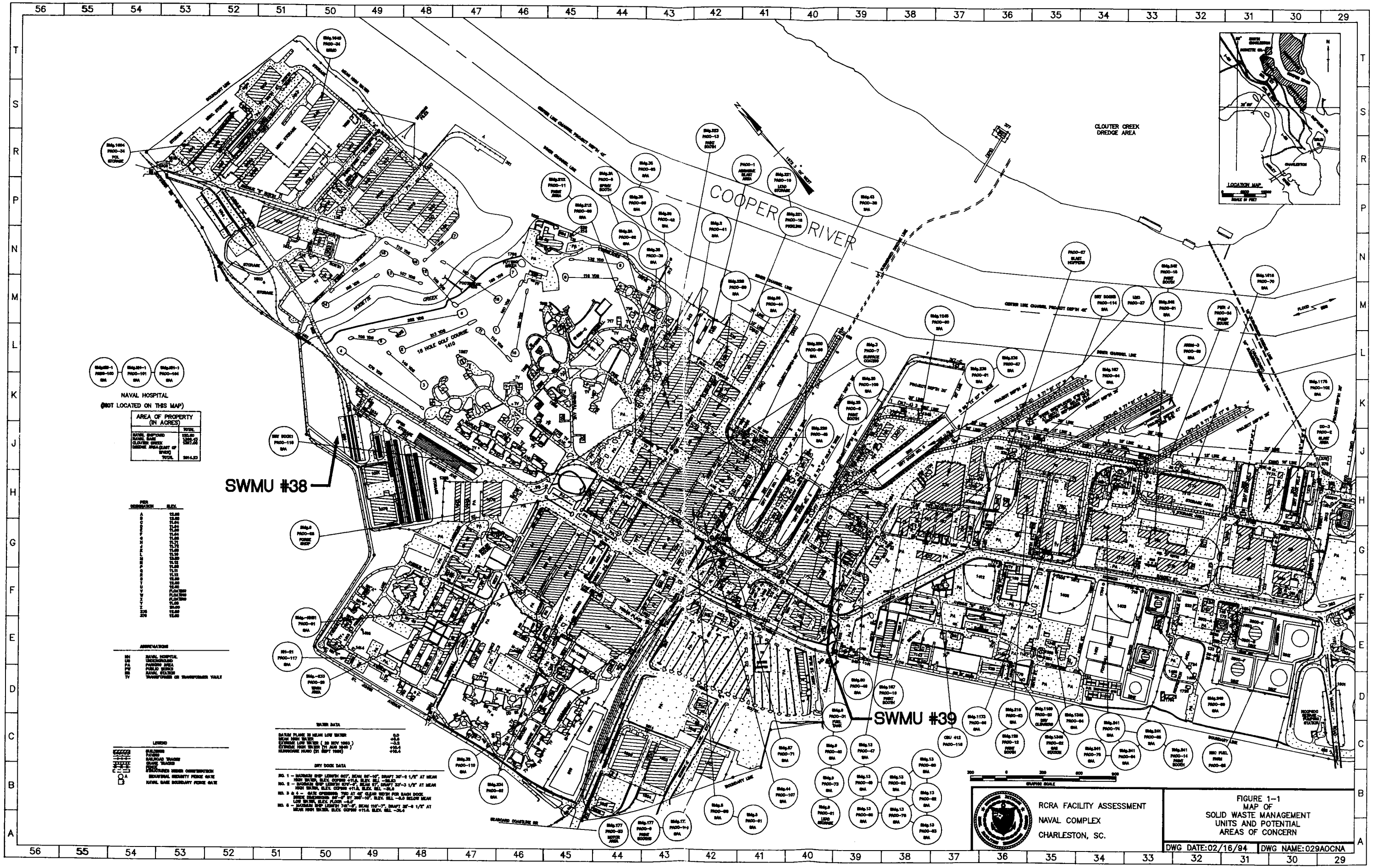
COOPER RIVER
CLOUTER CREEK DREDGE AREA
SWMU #38
SWMU #39
NAVAL HOSPITAL
(NOT LOCATED ON THIS MAP)
AREA OF PROPERTY (IN ACRES)
LOCATION MAP
LEGEND
ABBREVIATIONS
TIDE DATA
DRY DOCK DATA
RCRA FACILITY ASSESSMENT
NAVAL COMPLEX
CHARLESTON, SC.
FIGURE 1-1
MAP OF
SOLID WASTE MANAGEMENT
UNITS AND POTENTIAL
AREAS OF CONCERN
DWG DATE:02/16/94
DWG NAME:029AOCNA

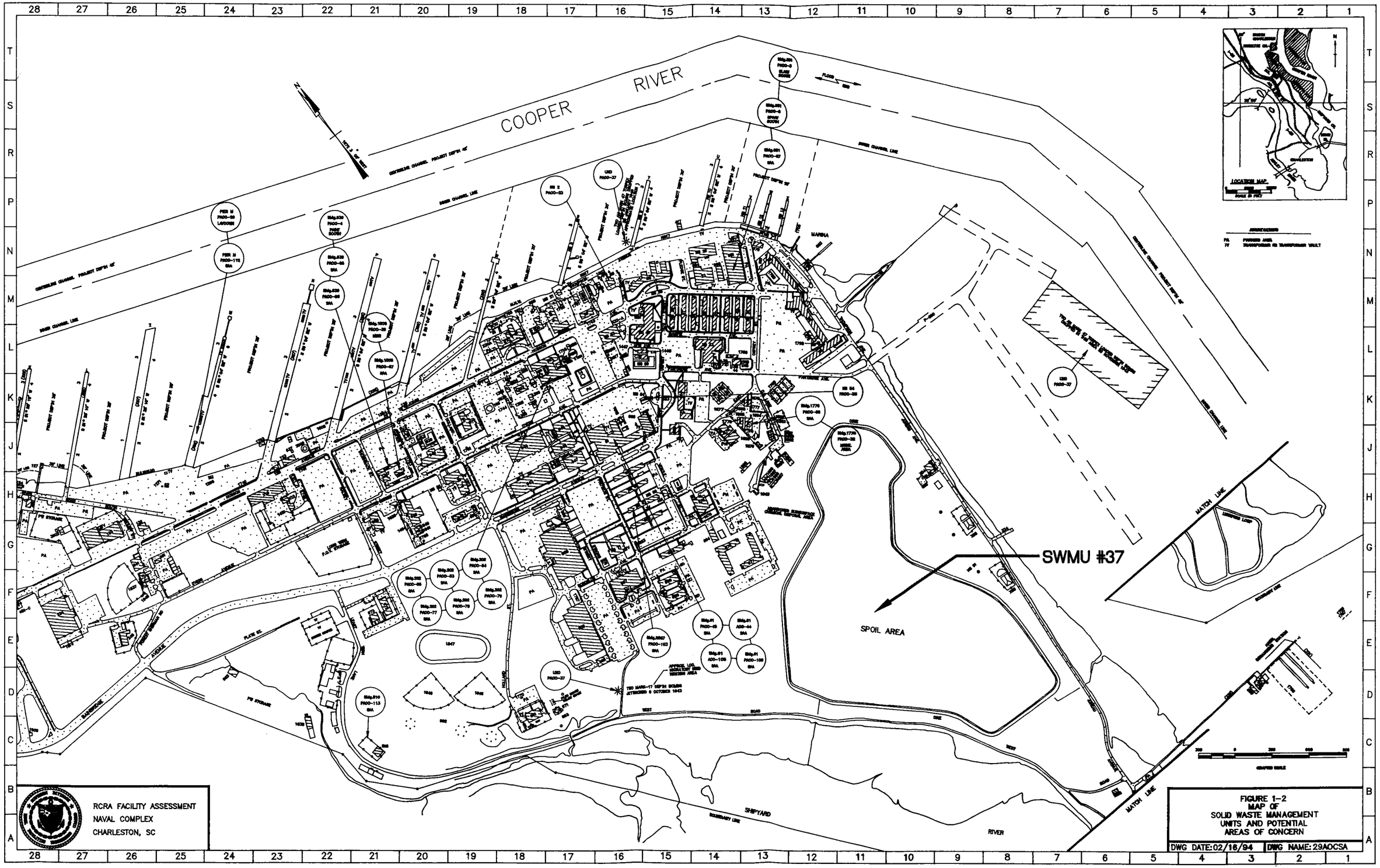
COOPER RIVER
SWMU #37
SPOIL AREA
MARINA
SHIPYARD
RIVER
MATCH LINE
LOCATION MAP
RCRA FACILITY ASSESSMENT
NAVAL COMPLEX
CHARLESTON, SC
FIGURE 1-2
MAP OF
SOLID WASTE MANAGEMENT
UNITS AND POTENTIAL
AREAS OF CONCERN
DWG DATE: 02/16/94
DWG NAME: 29AOCSA