N61165.AR.003335
CNC CHARLESTON
5090.3a

CORRECTIVE MEASURES IMPLEMENTATION WORK PLAN SOLID WASTE MANAGEMENT UNIT 39 (SWMU 39) ZONE A CNC CHARLESTON SC

5/9/2008

CH2M HILL

CORRECTIVE MEASURES IMPLEMENTATION WORK PLAN

SWMU 39, Zone A

Charleston Naval Complex
North Charleston, South Carolina

SUBMITTED TO
U.S. Navy Southern Division
Naval Facilities Engineering Command

CH2M-Jones

May 2008

Contract N62467-99-C-0960

This document is the property of the US Navy and should be returned to the Charleston Naval Complex (CNC) Administrative Record Room located at the CNC Redevelopment Authority office 1360 Truxtun Ave., Bldg 7, Suite 301 N. Charleston, SC 29405.

CH2MHILL

CH2M HILL
3011 SW Williston Road
Gainesville, FL
32608-3928
P.O. Box 147009
Gainesville, FL
32614-7009
TEL 352.335.7991
FAX 352.335.2959

May 9, 2008

Ms. Meredith Amick
South Carolina Department of Health and
Environmental Control
Bureau of Land and Waste Management
2600 Bull Street
Columbia, SC 29201

Re: Corrective Measures Implementation Work Plan, Revision 1 – SWMU 39, Zone A

Dear Ms. Amick:

Enclosed please find two copies of the Corrective Measures Implementation Work Plan, Revision 1 for SWMU 39 in Zone A of the Charleston Naval Complex. Included in this submittal are replacement covers, pages, and figures, as well as responses to comments on the Revision 0 document. This report has been prepared pursuant to agreements by the CNC BRAC Cleanup Team for completing the RCRA Corrective Action process.

Please contact me at 352/335-5877, ext. 52280, if you have any questions or comments.

Sincerely,

CH2M HILL

Dean Williamson, P.E.

cc: Dann Spariosu/USEPA, w/att
Kathryn Steward/Navy, w/att
Gary Foster/CH2M HILL, w/att

CH2MHILL

CH2M HILL
3011 SW Williston Road
Gainesville, FL
32608-3928
P.O. Box 147009
Gainesville, FL
32614-7009
TEL 352.335.7991
FAX 352.335.2959

April 17, 2007

Ms. Stacey French
South Carolina Department of Health and
Environmental Control
Bureau of Land and Waste Management
2600 Bull Street
Columbia, SC 29201

Re: Corrective Measures Implementation Plan, Revision 0 – SWMU 39, Zone A

Dear Ms. French:

Enclosed please find two copies of the Corrective Measures Implementation Plan, Revision 0 for SWMU 39 in Zone A of the Charleston Naval Complex. This report has been prepared pursuant to agreements by the CNC BRAC Cleanup Team for completing the RCRA Corrective Action process.

Please contact me at 352/335-5877, ext. 52280, if you have any questions or comments.

Sincerely,

CH2M HILL

Dean Williamson, P.E.

cc: Dann Spariosu/USEPA, w/att
Dudley Patrick/Navy, w/att
Gary Foster/CH2M HILL, w/att

CORRECTIVE MEASURES IMPLEMENTATION WORK PLAN

SWMU 39, Zone A

Charleston Naval Complex
North Charleston, South Carolina

SUBMITTED TO
U.S. Navy Southern Division
Naval Facilities Engineering Command

PREPARED BY
CH2M-Jones

May 2008

Revision 1
Contract N62467-99-C-09602
258814.ZA.EX.01

Certification Page for Corrective Measures Implementation Work Plan for SWMU 39, Zone A, Charleston Naval Complex — Revision 1

I certify under penalty of law that this document and all attachments were prepared under my direction or supervision in accordance with a system designed to assure that the qualified personnel properly gather and evaluate the information submitted. Based on my inquiry of the person or persons who manage the system, or those persons directly responsible for gathering the information, the information submitted is, to the best of my knowledge and belief, true, accurate, and complete. I am aware that there are significant penalties for submitting false information, including the possibility of fine and imprisonment for knowing violations.

South Carolina

No. 21428

Dean Williamson

Dean Williamson, P.E.

5/14/2008

Date

CORRECTIVE MEASURES IMPLEMENTATION PLAN

SWMU 39, Zone A

Charleston Naval Complex
North Charleston, South Carolina

SUBMITTED TO
U.S. Navy Southern Division
Naval Facilities Engineering Command

PREPARED BY
CH2M-Jones

April 2007

Revision 0
Contract N62467-99-C-09602
258814.ZA.EX.01

Certification Page for Corrective Measures Implementation Plan for SWMU 39, Zone A, Charleston Naval Complex — Revision 0

I certify under penalty of law that this document and all attachments were prepared under my direction or supervision in accordance with a system designed to assure that the qualified personnel properly gather and evaluate the information submitted. Based on my inquiry of the person or persons who manage the system, or those persons directly responsible for gathering the information, the information submitted is, to the best of my knowledge and belief, true, accurate, and complete. I am aware that there are significant penalties for submitting false information, including the possibility of fine and imprisonment for knowing violations.

South Carolina

No. 21428

Dean Williamson, P.E.

4/10/2007

Date

Contents

Section **Page**

Acronyms and Abbreviations vi

1.0 Introduction 1-1

Figure 1-1 Location of SWMU 39 in Zone A 1-4

Figure 1-2 Aerial Photo View of SWMU 39 Area 1-5

2.0 Summary of CMS Recommendations 2-1

2.1 SWMU 39 Remedial Action Objectives and COCs 2-1

2.2 In-Situ Treatment of Source Area Groundwater 2-1

2.3 Monitoring Natural Attenuation 2-3

2.4 Land Use Controls 2-3

2.4.1 Modifying LUCs 2-5

2.4.2 Implementing Construction Activities in Areas Impacted by LUCs 2-5

2.4.3 Monitoring of LUCs and Reporting Requirements 2-6

2.4.4 Groundwater Well Notification Record Review Process 2-6

Figure 2-1 Enhanced In-Situ Anaerobic Biodegradation Substrate Injection and Performance Monitoring Layout 2-8

3.0 Results of Phase II IMWP Implementation 3-1

3.1 Implementation of Source Area In-situ Groundwater Treatment 3-1

3.1.1 Results for TTA 1A 3-2

3.1.2 Results for TTA 1B 3-4

3.1.3 Summary of Data Collected During 2005 and 2006 3-7

3.2 Installation of Biobarrier DPTs and Injection Wells 3-7

Table 3-1 Injection Schedule and Volumes for SWMU 39 Source Area 3-9

Table 3-2 Summary of TOC and VOC Results - Source Area Wells 3-13

Table 3-3 Summary of Results for Field Parameters - SWMU 39 Source Area Wells 3-16

Table 3-4 Summary of Results for Dissolved Gases and Volatile Fatty Acids - SWMU 39 Source Area Wells 3-20

Table 3-5 Summary of COC Results for Biobarrier DPT Samples 3-22

Table 3-6 Injection Schedule and Volumes for SWMU 39 Biobarrier 3-23

Table 3-7 Summary of Field Results for the Biobarrier 3-24

Contents, Continued

Table 3-8 Summary of Performance Data for the Biobarrier 3-25
Figure 3-1 SWMU 39, Source Area Wells 3-26
Figure 3-2 TOC in Well 39GW48D 3-27
Figure 3-3 VOCs in Well 39GW48D 3-27
Figure 3-4 TOC in 39GW46D 3-28
Figure 3-5 VOCs in 39GW46D 3-28
Figure 3-6 TOC in Well 39GW35D 3-29
Figure 3-7 VOCs in Well 39GW35D 3-29
Figure 3-8 TOC in Well 39GW37D 3-30
Figure 3-9 VOCs in Well 39GW37D 3-30
Figure 3-10 TOC in Well 39GW38D 3-31
Figure 3-11 VOCs in Well 39GW38D 3-31
Figure 3-12 TOC in Well 39GW45D 3-32
Figure 3-13 VOCs in 39GW45D 3-32
Figure 3-14 DPT Sampling Locations – SWMU 39 Biobarrier 3-33
Figure 3-15 Location of Biobarrier Wells – SWMU 39 3-34
4.0 Recommendations for Further Implementation of Corrective Measures 4-1
4.1 Further Implementation of Corrective Measures in Source Area TTAs 4-1
4.2 Further Implementation of Corrective Measures in the Biobarrier Area 4-1
4.3 Redevelopment Activities at SWMU 39 4-2
Figure 4-1 Site Map – Dig Permit #189 4-3
5.0 References 5-1

Appendices

A Process to Construct Document
B Sample Inspection Form
C UIC Permitting Information
D Well Construction Diagrams, Purge Logs, and Forms #1903
E Summary of Analytical Data
F Responses to SCDHEC Comments

Acronyms and Abbreviations

BRAC	Base Realignment and Closure
CA	corrective action
cm	centimeters
CMIP	Corrective Measures Implementation Plan
CMS	Corrective Measures Study
CNC	Charleston Naval Complex
COC	chemical of concern
CVOC	chlorinated volatile organic compound
DCE	dichloroethene
DNAPL	dense nonaqueous phase liquid
DO	dissolved oxygen
DPT	direct-push technology
EPA	U.S. Environmental Protection Agency
ft bls	feet below land surface
IMWP	Interim Measures Work Plan
LUC	land use control
LUMP	Land Use Control Management Plan
µg/L	micrograms per liter
MCL	maximum contaminant level
MCS	media cleanup standard
mg/L	milligrams per liter
ml	milliliters
MNA	monitored natural attenuation
mV	millivolts
NA	not applicable
NAVBASE	Naval Base
NOI	Notice of Intent
NTU	nephelometric turbidiy units

Acronyms and Abbreviations, Continued

O&M	operations and maintenance
ORP	oxidation-reduction potential
PCE	tetrachloroethene
POL	petroleum, oil, and lubricant
RAO	remedial action objective
RCRA	Resource Conservation and Recovery Act
RFI	RCRA Facility Investigation
SB	Statement of Basis
SCDHEC	South Carolina Department of Health and Environmental Control
SCHWMR	South Carolina Hazardous Waste Management Regulations
SWMU	Solid Waste Management Unit
TOC	total organic carbon
TTA	Target Treatment Area
UIC	underground injection control
VFA	volatile fatty acid
VOC	volatile organic compound
ZVI	zero valent iron

SECTION 1.0

Introduction

1.0 Introduction

In 1993, Naval Base (NAVBASE) Charleston was added to the list of bases scheduled for closure as part of the Defense Base Realignment and Closure Act (BRAC), which regulates closure and transition of property to the community. The Charleston Naval Complex (CNC) was formed as a result of the dis-establishment of the Charleston Naval Shipyard and NAVBASE on April 1, 1996.

Corrective Action (CA) activities are being conducted under the Resource Conservation and Recovery Act (RCRA) with the South Carolina Department of Health and Environmental Control (SCDHEC) as the lead agency for CA activities at the CNC. All RCRA CA activities are performed in accordance with the Final Permit (Permit No. SC0 170 022 560). In April 2000, CH2M-Jones was awarded a contract to provide environmental investigation and remediation services at the CNC.

This Corrective Measures Implementation Plan (CMIP) addresses the overall approach for implementing corrective measures at Solid Waste Management Unit (SWMU) 39. SWMU 39 is the site of a former outdoor storage area for petroleum, oil, and lubricant (POL) drums along the north wall of Building 1604. The location of SWMU 39 in Zone A of the CNC is presented in **Figure 1-1**. **Figure 1-2** shows an aerial photograph of the general layout of SWMU 39. Building 1604 is a large warehouse located near the northern boundary of the CNC. SWMU 39 is bounded to the north by the Hess Oil tank farm, to the west by a road and railroad along the base boundary, to the south by railroad lines and buildings associated with SWMU 42, and to the east by buildings associated with SWMU 38.

Several chlorinated volatile organic compounds (CVOCs), such as trichloroethene (TCE), cis-1,2-dichloroethene (cis-1,2-DCE), and vinyl chloride, have been identified as chemicals of concern (COCs) in groundwater in the shallow aquifer at SWMU 39. The source of volatile organic compounds (VOCs) in groundwater is believed to have resulted from minor spills of TCE that occurred at various times during many years of site operations at various locations in the vicinity of SWMU 39. No source of VOC contamination in soil has been identified. However, several areas of elevated VOC concentrations in groundwater were identified as potential source areas.

The *SWMU 39 CMS Report, Revision 0* (CH2M-Jones, 2002) described the history of SWMU 39 in detail, summarized available data from soil and groundwater sampling over many

years, and identified COCs for the site. The CMS report proposed specific corrective measures for SWMU 39. Active remediation measures proposed included in-situ treatment of groundwater in the source areas through pneumatic injection of zero valent iron (ZVI) and monitored natural attenuation (MNA) for the more dilute groundwater plume. A Statement of Basis (SB) that documented the CMS report findings and presented the preferred corrective measure alternative was also produced and made available for public comment.

Based on further evaluation of source area treatment options, a CMS Addendum and Phase II Interim Measures Work Plan (IMWP) were developed and submitted to SCDHEC (CH2M-Jones, 2004). An alternate, more cost-effective treatment approach (enhanced in-situ biodegradation) was proposed for the source area. The Phase II IMWP described the proposed approach for implementing and evaluating this alternate treatment method. None of the proposed remedial action objectives (RAOs) or target media cleanup standards (MCSs) was modified in the CMS Addendum.

This CMIP describes the results of the implementation of the Phase II IMWP, documents the results achieved to date for the source area treatment, and describes the overall approach for further implementing the SWMU 39 corrective measures, including Land Use Controls (LUCs). In addition, the implementation of a groundwater treatment biobarrier along the western property boundary at SWMU 39 is also described.

This report is organized into the following sections:

Section 1.0 Introduction – This section summarizes the background for the report and its objectives.

Section 2.0 Summary of CMS Recommendations – This section presents a summary of the recommendations made in the CMS report and CMS Addendum for implementing corrective measures at Combined SWMU 39.

Section 3.0 Results of Phase II IMWP Implementation – This section describes the results of the implementation of enhanced in-situ biodegradation in the Source Area. It also describes the results of the implementation of the groundwater biobarrier along the western property line.

Section 4.0 Recommendations for Further Implementation of Corrective Measures – This section describes the proposed implementation approach to continuing the implementation of corrective measures at SWMU 39, including LUCs.

Section 5.0 References - This section provides references for the report.

Appendix A - Process to Conduct Construction Activities in Areas with Land Use Controls

Appendix B - Sample Inspection Form

Appendix C - Underground Injection Control (UIC) Permitting Information

Appendix D - Well Construction Diagrams, Purge Logs, and Forms #1903

Appendix E - Summary of Analytical Data

Appendix F - Responses to SCDHEC comments on the Revision 0 CMI WP.

All tables and figures are presented at the end of their respective sections.

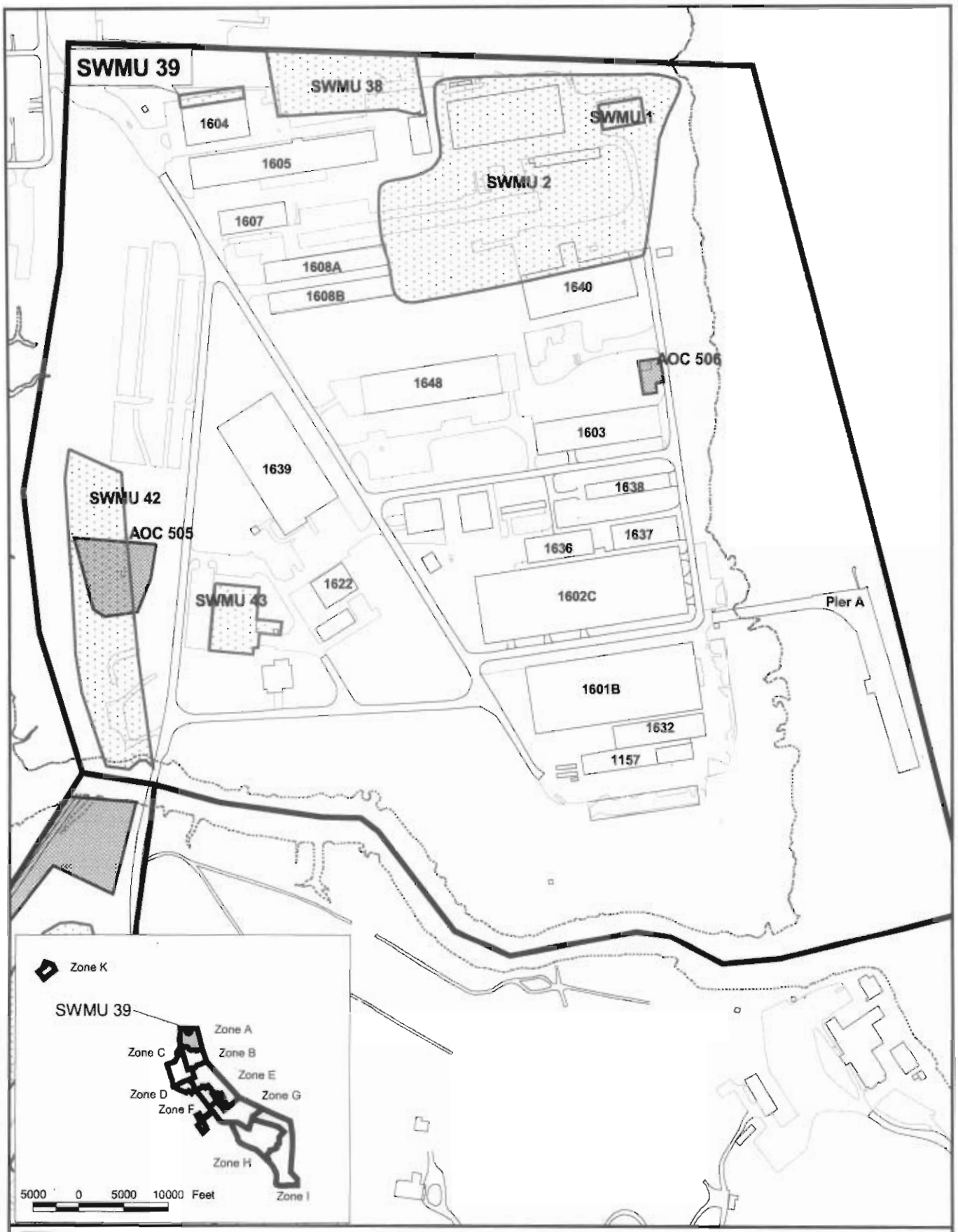

Zone Boundary
AOC Boundary
SWMU Boundary
Buildings
Roads
Pavement
Shoreline

N

0 300 600 Feet

Figure 1-1
Location of SWMU 39 in Zone A
SWMU 39, Zone A
Charleston Naval Complex

CH2MHILL

File Path: C:\18gis\Projects\Zone_A\Swmu_39\Aprs\swmu_39.apr, Date: 13 May 2003 12:55, User: NMOUDRY, Figure 1-1 SWMU 39

NOTE: Aerial Photo Date is 1997

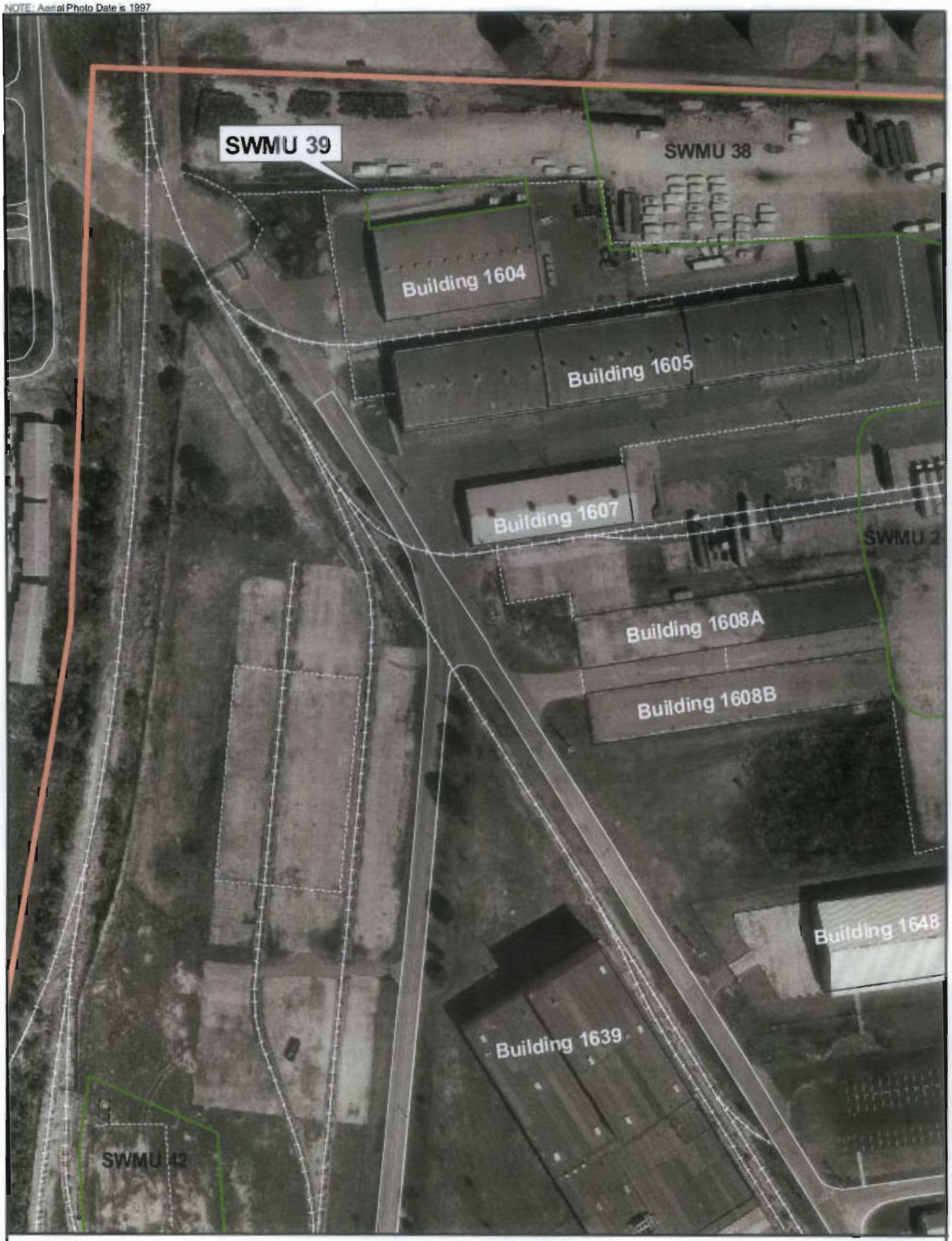

SWMU Boundary
Buildings
Zone Boundary
Fence
Railroads
Roads

N

0 100 200 Feet

Figure 1-2
Aerial Photo View of SWMU 39 Area
SWMU 39, Zone A
Charleston Naval Complex

CH2MHILL

File Path: C:\18gis\Projects\Zone_A\Swmu_39\Apns\swmu_39.apr, Date: 13 May 2003 12:56, User: NMOUDRY, Figure 1-2 Site Layout

SECTION 2.0

Summary of CMS Recommendations

2.0 Summary of CMS Recommendations

2.1 SWMU 39 Remedial Action Objectives and COCs

The CMS report identified the following RAOs for SWMU 39:

(1) Prevent ingestion and direct/dermal contact with groundwater having unacceptable carcinogenic or non-carcinogenic risk;

(2) Restore the aquifer to beneficial use; and

(3) Control offsite migration of the VOC plume in groundwater to the extent practical.

No soil COCs were identified for SWMU 39. Groundwater COCs for SWMU 39 and their target MCSs are as follows:

Chemical	Target MCS (µg/L)
Tetrachloroethene (PCE)	5
Trichloroethene (TCE)	5
cis-1,2-Dichloroethene (cis-1,2-DCE)	70
1,1-Dichloroethene (1,1-DCE)	7
Vinyl Chloride	2

µg/L micrograms per liter

Key elements of the corrective measures selected for SWMU 39 in the CMS report include:

- In-situ treatment of groundwater in the source area (defined as locations where total COC concentrations are 1,000 micrograms per liter [µg/L]or greater);
- MNA for the dissolved plume outside of the source area; and
- LUCs, to prevent inappropriate use of site groundwater or other activities that could lead to unacceptable exposure of receptors to site COCs.

Each of these elements is discussed briefly in the following paragraphs.

2.2 In-Situ Treatment of Source Area Groundwater

During the site characterization activities performed as part of the RCRA Facility Investigation (RFI) and subsequent groundwater investigation activities, no high-

concentration locations that would be considered dense nonaqueous phase liquid (DNAPL) source zones were identified at SWMU 39. It was concluded that the releases of VOCs, such as tetrachloroethene (PCE) and TCE, at the site probably occurred in relatively small volumes and at several locations rather than as a single, large release. In addition, given the relatively large degree of transformation of PCE and TCE to biodegradation products such as cis-1,2-DCE and vinyl chloride, it appears that the original solvent releases occurred several decades ago.

Although a potential DNAPL source zone was not located, several locations were identified that had higher VOC concentrations in groundwater than at other portions of the site. In the vicinity of former Buildings 1608A and 1608B, several groundwater samples were collected at which total VOC concentrations (consisting primarily TCE and cis-1,2-DCE) exceeded 1,000 µg/L. The locations of these areas, as developed during the Phase II IMWP, are shown in **Figure 2-1**. Because these concentrations were the greatest detected at the site, they were considered to be possible locations at which some of the small solvent releases had occurred and these areas were selected for active in-situ groundwater treatment as part of the overall corrective measures for the site.

The locations and approximate elevations of the Target Treatment Areas (TTAs) are as follows:

- TTA 1A - North Central Portion of Building 1608A - Deep interval of the surficial aquifer, approximately 38 to 48 feet below land surface (ft bls). The approximate area of TTA 1A is 20 by 40 feet.
- TTA 1B - South Central Portion of Building 1608B - Deep interval of the surficial aquifer, approximately 34 to 48 ft bls. The approximate area of TTA 1B is approximately 20 by 100 feet.

The CMS report identified in-situ chemical reduction using pneumatically injected ZVI as the preferred remedy for these areas. After further evaluation of the costs required to apply this technology, an alternate approach using in-situ biodegradation was selected. A Phase II IMWP was developed for the implementation and monitoring of this alternate approach. The IWMP provided for the installation of two injection wells in TTA 1A and six injection wells in TTA 1B. The approach proposed for stimulating in-situ biodegradation in these areas was through injection of a fermentable organic substrate, such potassium lactate, into the aquifer to achieve reducing conditions.

The results of the implementation of the Source Area in-situ treatment are described in *Section 3.0, Implementation of Phase II IMWP.*

2.3 Monitoring Natural Attenuation

As discussed in the CMS report, MNA relies on natural processes, such as biodegradation and volatilization, to treat contaminants in a groundwater plume. The widespread presence of DCE and vinyl chloride, both of which are biodegradation products of PCE and TCE, provides significant evidence that natural attenuation processes are occurring at the site.

During the annual monitoring at SWMU 39, 19 wells across the site are analyzed for VOCs. The monitoring provides a means for evaluating and tracking changes in plume concentrations and assessing the effectiveness of natural attenuation over time.

One area of particular interest for the groundwater monitoring at SWMU 39 has been along the western property boundary. A contingent corrective measure (implementation of an in-situ groundwater treatment remedy) along the western boundary was included in the CMS report in the event that groundwater concentrations along the western boundary increased such that migration of groundwater containing VOCs greater than the maximum contaminant levels (MCLs) appeared feasible. After completion of the CMS Addendum and Phase II IMWP, groundwater in well A39GW030I, located near this property boundary, was noted to contain TCE at a concentration of 11 μg/L, slightly above its MCL of 5 μg/L. A decision to implement a biobarrier-type in-situ groundwater was made, to mitigate any groundwater contamination tending to migrate offsite in this area. The results of the implementation of a biobarrier along the western boundary of the site are described in *Section 3.0, Implementation of Phase II IMWP.*

2.4 Land Use Controls

LUCs have been implemented at SWMU 39 and many other sites at the CNC to provide additional protection to potential receptors until remediation activities are completed. LUCs implemented at SWMU 39 will limit the future use of the site to control or eliminate exposure to COCs at the site and to ensure the integrity and effectiveness of the selected corrective measures.

With regard to real property, a LUC refers to any restriction or control that limits the use of, and/or exposure to, a portion of the property, including water resources, arising from the need to protect human health and the environment. The LUCs will be primarily regarded as

a component of corrective action that applies technologies that reduce toxicity, mobility, volume, and mass of the source of contamination and not as a stand-alone corrective action.

The term LUC encompasses "institutional controls," which are defined as real estate restrictions, deed notifications, governmental permitting, zoning laws and other "legal" restrictions to protect human health and the environment. Institutional controls are non-engineered mechanisms used for ensuring compliance with necessary land use limitations.

LUCs also include restrictions on access (access controls), whether achieved by means of engineered barriers (e.g., fence or concrete pad), affirmative measures to achieve the desired restrictions (e.g., night-lighting of an area), or prohibitive directives (e.g., restrictions on certain types of wells for the duration of the corrective action).

Considered altogether, the LUCs for a facility provide a tool for directing how the property should be used in order to maintain the level of protectiveness that one or more corrective actions were designed to achieve. Periodic inspections will be conducted to ensure the long-term integrity of the remedy and the effectiveness of the LUCs.

LUCs will be implemented at the site to achieve the following objectives:

- Prevent human contact with groundwater that may contain COCs;
- Control the implementation of soil disturbance activities (e.g., construction activities) such that inadvertent exposure to COCs does not occur; and
- Limit residential development of the site, unless it can be conducted in a manner that is demonstrated to be protective to potential receptors.

The term "control the implementation of soil disturbance activities" does not mean that all intrusive drilling or other intrusive activities into the subsurface will be prohibited. However, any intrusive activities will require an evaluation and the parties conducting the intrusive activities will need to understand the potential consequences that contact with contaminated groundwater may cause. In addition, any activities that require dewatering will be need to be conducted in a manner to ensure that any extracted groundwater is properly managed such that it does not cause unacceptable impacts to human health or the environment. Activities that would compromise the integrity or protectiveness of the remedy will not be permitted.

The LUCs will be developed and implemented in accordance with the Navy's RCRA Hazardous Waste Management permit and current Navy and SCDHEC policies for LUCs. Periodic visual inspections and reviews will be conducted for the purpose of verifying that

all necessary LUCs have been implemented and are being properly maintained. An annual report will be prepared and forwarded to the SCDHEC, signed by the Navy, certifying the continued retention of all LUCs implemented in SWMU 39. LUCs were incorporated into the RCRA Part B Permit for the CNC in the March 2005 permit modification.

2.4.1 Modifying LUCs

In order for LUCs to be changed, the RCRA CA permit must be modified. The request for permit modification must come from the Navy. The method to modify the permit is outlined in the applicable South Carolina Hazardous Waste Management Regulations (SCHWMR), R61-79-264 and R61-79-270.42. The LUCs cannot be modified or removed without the approval of the Navy and SCDHEC.

Each provision of the LUCs may be modified separately or collectively by individual site or as a collection of sites with applicable documentation. LUCs may be modified in accordance with the Land Use Control Management Plan (LUCMP) contained within the RCRA Part B permit. This allows for the evaluation of a proposed land use with respect to the exposure assumptions used to estimate the risk to human health and the environment.

It is the responsibility of the Property Owner to ensure that LUCs are implemented and maintained properly and in agreement with their Voluntary Cleanup Contract and this CMIP. The Navy elected to transfer the procedural responsibilities to the Property Owners by contract; however, the Navy shall retain ultimate responsibility for corrective action integrity.

In the event that a transfer of the property to a new owner is implemented, the current Property Owner will follow the property conveyance process outlined in the LUCMP contained within the RCRA permit. The Property Owner shall ensure that: (1) covenants consistent with the Permit are included in the appropriate conveyance documentation, and (2) the Navy, SCDHEC, and the U.S. Environmental Protection Agency (EPA) are provided with a copy of any proposed deed or other conveyance documents prior to any conveyance in order to ensure that the documents are consistent with the LUCs required as part of the final corrective action.

2.4.2 Implementing Construction Activities in Areas Impacted by LUCs

The Navy, in conjunction with SCDHEC (Bureau of Land and Waste Management) and EPA, has developed a process for use by current and subsequent landowners or operators when conducting construction activities in areas where LUCs exist. The process includes

submittal of information necessary to evaluate whether construction activities may have an adverse effect on LUCs and remedies in place at the CNC.

The process to be followed for construction activities in areas with LUCs is described in **Appendix A**. This process was previously referred to as the "Dig Permit' process. It is important that this process be rigorously followed so that the construction is implemented in a manner that does not change the protectiveness of the remedy. **Appendix A** also shows the portions of SWMU 39 subject to LUCs.

2.4.3 Monitoring of LUCs and Reporting Requirements

In accordance with the LUCMP, monitoring of the LUCs will be conducted at least annually. The Navy is responsible for inspecting and certifying LUCs. However, per the VCCs signed by the new property owners, the property owners have assumed responsibility for inspecting Land Use Controls on their property. Copies of the monitoring reports for a given year will be provided to the Navy by the land owners by the end of January of the following year. The Navy will submit and certify the reports to SCDHEC with copies also provided to EPA by the end of March.

The LUC monitoring report submitted by the Property Owner or their designated party will summarize the status of the LUCs and how any deficiencies or inconsistent uses have been addressed. The evaluation will address whether the use restrictions and controls referenced in this CMIP were communicated in deeds (if necessary), whether owners and state and local agencies were notified of the use restrictions and controls affecting the property (if applicable), and whether use of the property has conformed to such restrictions and controls.

An example inspection form that can be adapted for use in conducting these inspections is provided in **Appendix B**.

2.4.4 Groundwater Well Notification Record Review Process

The SCDHEC has promulgated the *South Carolina Individual Residential Well and Irrigation Well Permitting* at R.61-44 and the *Well Standards* at R.61-71 pursuant to the authority of the pollution Control Act, Section 48-1-10 *et seq.* and the Safe Drinking Water Act, Section 44-55-10 *et seq.*, 1976 S.C. Code of Laws. The groundwater well regulations require any property owner, agent, or the licensed well driller to submit a Notice of Intent (NOI) and obtain coverage under a General Permit, in the manner prescribed by the SCDHEC Bureau of Water regulations, prior to commencement of drilling water wells in South Carolina. The regulations will not directly prevent installation of groundwater wells within the

contaminated groundwater plume(s) on the former CNC. However, the Navy will review Bureau of Water notification records or database(s) for permitted wells and use that information as provided below.

The Navy will review the SCDHEC well installation request records or database(s) at least once a year to determine whether a property owner (or licensed well driller) has submitted a NOI and use that information to determine the actual or proposed well location. In the event that an NOI has been filed for a well or wells within any known groundwater plumes at the CNC, the Navy will undertake a good faith effort to promptly contact the property owner (or licensed well driller) to inform them of the potential risks associated with using the groundwater. The Navy will ascertain whether the proposed use may violate existing land and/or groundwater use restrictions (on the former CNC property) or otherwise undermine the corrective action.

Should the Navy discover a well on the former CNC, a notice will be sent via registered mail to the property owner (and/or lessee, if necessary) within 30 days. The notice will provide information regarding the deed restrictions and require the owner (and/or lessee) immediately cease use of the well and remove/abandon the well within 60 days. The Navy will also notify EPA and SCDHEC as soon as practicable, but no later than 10 days from the discovery of the well, as well as provide EPA and SCDHEC a copy of the notification letters sent to the property owners (or lessee). The Navy will also request that SCDHEC initiate an enforcement action in accordance with R61-44(H) if the wells could present an unacceptable risk to the health of the persons using the well.

NOTE: Original figure created in color

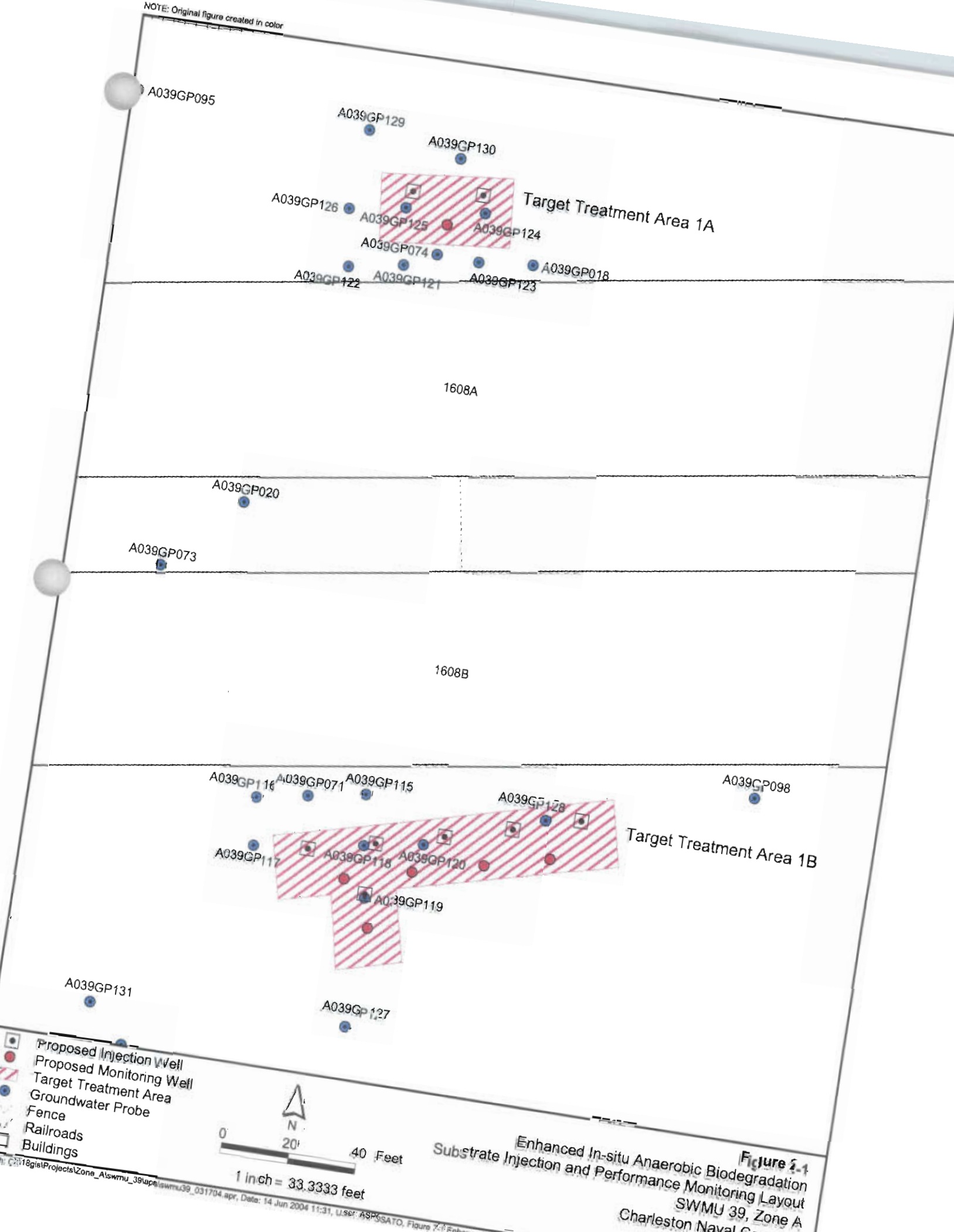

Figure 2-1
Enhanced In-situ Anaerobic Biodegradation
Substrate Injection and Performance Monitoring Layout
SWMU 39, Zone A
Charleston Naval C

h: C:\18gis\Projects\Zone_A\swmu_39\apr\swmu39_031704.apr, Date: 14 Jun 2004 11:31, User: ASPOSATO, Figure 2-1 Enhan

SECTION 3.0

Results of Phase II IMWP Implementation

3.0 Results of Implementation of Phase II IMWP

Field activities related to the implementation of the Phase II IMWP at SWMU 39 were performed from late 2004 through early 2007. These activities included the installation of the Source Area injection wells, subsequent injection of organic substrates to stimulate in-situ biodegradation, and performance monitoring. In addition, a biobarrier was installed along the western site boundary.

3.1 Implementation of Source Area In-situ Groundwater Treatment

CH2M HILL began the installation of the Source Area injection wells in December 2004. Three injection wells were installed in TTA 1A and seven injection wells were installed in TTA 1B. The locations of these injection wells are presented in **Figure 3-1**. Injection wells installed at TTA 1A include A39GW047D, A39GW049D, and A39GW050D. Injection wells installed at TTA 1B include A39GW036D, A39GW039D, A39GW040D, A39GW041D, A39GW042D, A39GW043D, and A39GW044D.

Injection well installation permits were requested from and provided by the SCDHEC UIC permitting department (Addendum to UIC Permit #538). An operating permit was also obtained from SCDHEC (UIC Permit 538M1). A summary of UIC permitting information is provided in **Appendix C**.

Six monitoring wells to track the performance of the in-situ groundwater treatment were also installed, with monitoring wells A39GW046D and A39GW048D installed in TTA 1A and monitoring wells A39GW035D, A39GW037D, A39GW038D, and A39GW045D installed in TTA 1B. These well locations are also shown in **Figure 3-1**. Monitoring well installation approval number HW-04-077 was provided by SCDHEC for installation of these wells.

The injection and monitoring wells were constructed with approximately 10 feet of well screen, with the base of the well installed to approximately the top of the Ashley Formation, present at a depth of approximately 46 to 49 ft bls in the area of the TTAs. Well construction diagrams for the injection and monitoring wells are provided in **Appendix D**. Forms #1903 are also provided for these wells in the appendix.

Injection of substrate began in February 2005. **Table 3-1** shows the injection regime implemented from startup through the end of 2006. Substrate injections were conducted as generally described in the Phase II IMWP. All injection wells received a solution containing sodium lactate, except for injection wells A39GW047D in TTA 1A and A39GW036D in TTA 1B, which received an emulsified, food-grade vegetable oil substrate (EOS). Initial injection volumes were relatively low (200 to 600 gallons of injectate per well). In late 2005, the volume of injectate was increased while the concentration of the substrate was decreased. The increase in injectate volume was to achieve better delivery of the substrate out into the aquifer.

3.1.1 Results for TTA 1A

The performance of the in-situ treatment in TTA 1A was monitored using wells A39GW046D and A39GW048D. Well A39GW046D is located downgradient of injection well A39GW047D, in which EOS was injected as the substrate. Well A39GW048D is located was downgradient of injection wells A39GW049D and A39GW050D, into which lactate was injected.

Key parameters monitored to evaluate the effectiveness of the in-situ treatment included VOCs and total organic carbon (TOC). In addition, field parameters dissolved oxygen (DO), oxidation-reduction potential (ORP), pH, and temperature were measured during each monitoring event. Dissolved gases (methane, ethene, and ethane) and volatile fatty acids (VFAs) were analyzed periodically to provide additional data in interpreting overall system performance.

Monitoring results for the SWMU 39 Source Area wells for TOC and key VOCs (TCE, cis-1,2-DCE, and vinyl chloride) are summarized in **Table 3-2**. Results for field parameters are provided in **Table 3-3**. Results for dissolved gases (methane ethane, ethene) and VFAs are presented in **Table 3-4**. A summary of the analytical results is presented in **Appendix E**.

3.1.1.1 Results for Well A39GW048D

The background TOC concentration for well A39GW048D measured on January 17, 2005, prior to initiating injections, was approximately 2 milligrams per liter (mg/L). From **Figure 3-2**, it can be seen that the TOC at well A39GW048D increased from approximately 2 mg/L to over 700 mg/L by the end of 2006. TOC concentrations remained relatively low until November 2005, after which the TOC remained adequately elevated for the purpose of the in-situ treatment.

VOC results for well A39GW048D are presented graphically in **Figure 3-3**. The VOC results for well A39GW048D indicate a decline of TCE from 41 µg/L before in-situ treatment began to 5.6 µg/L (just above the TCE MCL of 5 µg/L) by the end of 2006. Cis-1,2-DCE increased during the first 18 months of the study, then declined in late 2006. This pattern of initial increase and subsequent decrease has been observed at other sites undergoing anaerobic biodegradation. Vinyl chloride did not accumulated and declined slightly from approximately 8 µg/L initially to approximately 5 µg/L during the field implementation.

In addition to these results, the field data presented in **Table 3-2** indicate that the ORP measured in the well declined significantly over the course of the treatment period, from an initial value of -10 mV to between -180 to -200 mV. Significant methane concentrations (112 and 102 mg/L) were measured in 2006, indicating a strongly methanogenic conditions, typical of a robust reductive dechlorinating zone. Monitoring for VFAs in the second half of 2006 indicated the presence of fermentation products (such as acetic acid and propionic acid). These data indicate that effective substrate fermentation was achieved in this portion of the treatment area.

Generally, these results indicate positive success of the implemented in-situ biodegradation remedy. The accumulation of TOC indicates that much of the electron donor demand has been satisfied by the periodic injections and that less substrate is required in the future to maintain the anaerobic conditions. Further discussion of proposed future activities in this area are provided in *Section 4.0, Recommendations for Further Implementation of Corrective Measures.*

3.1.1.2 Results for A39GW046D

Well A39GW046D is located downgradient of injection well A39GW047D, into which EOS was injected as a substrate. The TOC data for A39GW046D, presented in **Figure 3-4**, indicate that little to none of the TOC from the injected substrate reached this well during the monitoring period. This is likely due to the lower volume of injectate delivered into well A39GW047D during the treatment period, compared to the injection wells that received lactate, and the relatively low groundwater velocity in this area (less than 20 ft/year).

The VOC data for well A39GW046D, presented in **Figure 3-5**, indicate that DCE increased significantly and TCE and vinyl chloride increased to a lesser extent during the in-situ treatment period. As noted above, an increase in DCE concentrations is not unusual in these types of systems. This increase in DCE may have been caused by an increase in the biodegradation of TCE, with subsequent downgradient migration of the DCE.

The ORP data are consistent with the general lack of significant anaerobic biodegradation in the vicinity of this well. The lowest ORP values were note at the initiation of the injections and ORP seemed to increase during the monitoring period.

The methane data for this well indicate some degree of methanogenic activity was achieved in this area. The VFA data confirm the general lack of migration of TOC and substrate to this well. Overall, these data are consistent with the lack of TOC at well A39GW046D.

Generally, it appears that some biodegradation activity was induced upgradient of well A39GW046D as a result of the injection of the EOS substrate. However, further monitoring, and probably additional injections of substrate into well A39GW047D are required to provide additional treatment in this area. Further proposed treatment in the TTA 1A area is discussed in Section 4.0 of this report.

3.1.2 Results for TTA 1B

Four monitoring wells were used to monitor the results of the groundwater treatment in the TTA 1B area. Monitoring wells A39GW037D, A39GW038D, and A39GW045D are located downgradient of or close to injection wells into which lactate was injected as the substrate. Well A39GW035D is located was downgradient of injection well A39GW036D, into which EOS was injected. The injection schedule, including volumes injected and frequency of injections, for these wells is described in **Table 3-1**.

3.1.2.1 Results for A39GW035D

Well A39GW035D is located downgradient of well A39GW036D, which was used for EOS injection. TOC results for well A39GW035D are presented in **Figure 3-6**. The TOC increased through the period of testing from a background level of approximately 8 mg/L to over 14 mg/L by the end of 2006. Although not as significant as the increases noted downgradient of wells that received lactate, these TOC results indicate that the EOS injections did result in an increase in the TOC in the vicinity of and downgradient of well A39GW036D. These results are also more favorable than those observed for EOS in TTA 1A (well A39GW046D).

The VOC results for well A39GW035D, shown in **Figure 3-7**, indicate an initial increase, then significant decrease of both TCE and DCE. TCE concentrations have declined from 268 µg/L to 20 µg/L. DCE has decreased from 193 µg/L to 58 µg/L, which is below its drinking water MCL. Vinyl chloride concentrations did not change significantly during 2005 but increased in 2006.

Field data indicates a decline in ORP over the course of the treatment period, to a value less than -200 mV. Methane concentrations of up to 101 mg/L indicate the presence of methanogenic conditions in the vicinity of the well. VFA data for July 2006 indicate the presence of detectable concentrations of acetic acid, indicting that some amount of fermentable substrate was reaching this well.

Overall, the data for A39GW035D indicate that enhanced in-situ biodegradation using EOS has been successful in this area. Additional injections of EOS are likely required for optimal system performance. Further injection activities are discussed in Section 4.0 of this report.

3.1.2.3 Results for A39GW037D

Well A39GW037D is located downgradient of injection wells A39GW041D and A39GW042D, which received periodic injections of lactate. TOC data for this well, presented in **Figure 3-8**, indicate that TOC became elevated in this well in late 2005 and continued to increase to over 1,000 mg/L by the end of 2006. Based on these results it can be concluded that the lactate injections were effective in delivering the substrate into the aquifer in this area.

VOC results for well A39GW037D, shown in **Figure 3-9**, indicate an initial increase in TCE and DCE followed by significant decreases in these VOCs. TCE decreased from an initial concentration of 657 µg/L to 82 µg/L. DCE decreased from 766 vg/L to 530 µg/L. VC concentrations declined from an initial concentration of 28 µg/L to 13 µg/L.

The field data indicate that ORP declined significantly after injections began, with values close to -200 mV being consistently measured. Methane concentrations of up to 252 mg/L indicate the presence of a strongly methanogenic environment. VFA data indicate the presence of significant concentrations of acetic propionic and butyric acid, indicating a robust fermentative environment.

Overall, the data indicate that the in-situ groundwater treatment in this portion of the TTA has been effective in reducing VOC concentrations in groundwater.

3.1.2.4 Results for A39GW038D

Well A39GW038D is located downgradient of injection well A39GW043D, which received periodic injections of lactate. TOC data for this well, presented in **Figure 3-10**, indicate that TOC became elevated by the end of 2005 and continued to increase throughout 2006, reaching a maximum concentration of over 900 mg/L. Based on these results it can be

concluded that the lactate injections were effective in delivering the substrate into the aquifer in this area.

VOC results for well A39GW038D, shown in **Figure 3-11**, indicate a significant decrease in TCE concentrations, from 240 µg/L to 1.5 µg/L (below its MCL) during the last monitoring event in 2006. Cis-1,2-DCE increased slightly initially then declined significantly. From an initial concentration of 396 µg/L, cis-1,2-DCE has declined to 152 µg/L. Vinyl chloride has also declined from an initial concentration of 18 µg/L to a concentration of 3.1 µg/L, close to its MCL of 2 µg/L.

The field data indicate that ORP declined significantly after injections began, with values less than -200 mV being consistently measured. Methane concentrations of up to 600 mg/L indicate a strongly methanogenic environment. VFA data indicate the presence of significant concentrations of acetic, propionic and butyric acid, indicating a robust fermentative environment.

Overall, the data indicate that the in-situ groundwater treatment in this portion of the TTA has been effective in reducing VOC concentrations in groundwater.

3.1.2.5 Results for A39GW045D

Well A39GW045D was installed close to but slightly upgradient of injection well A39GW039D and A39GW040D. It was installed slightly upgradient due to the presence of heavy foliage and trees in the area just downgradient of these injection wells. Although the location of this well is not optimal, it was concluded that it would likely provide adequate data to assess the effectiveness of the injections in this portion of the TTA.

TOC data for this well, shown in **Figure 3-12**, indicate that TOC concentrations were not elevated in 2005 but increased in 2006 to a maximum value of over 300 mg/L, adequate to effective stimulate the reductive dechlorination process.

VOC data for this well, shown in **Figure 3-13**, indicate that TCE has declined from an initial concentration of 733 µg/L to a concentration of 340 µg/L. The greatest decline has been during the latter part of 2006. Cis-1,2-DCE increased initially, as was observed at other monitoring wells, but has been declining since late 2005. Vinyl chloride has remained relatively constant during this time.

The field data indicate that ORP declined significantly after injections began, with ORP values as low as -200 mV being measured. Methane concentrations have increased, with

values as high as 125 mg/L measured, indicating a methanogenic environment. VFA data indicate the presence of significant concentrations of acetic, propionic and butyric acid.

Based on the elevated TOC results during 2006, the significant decline of TCE and the declining trend in cis-1,2-DCE, and the other supporting data (presence of methane, a mixture of VFAs, and lowered ORP), it appears that the in-situ groundwater treatment process is proceeding effectively in this portion of the TTA.

3.1.3 Summary of Data Collected During 2005 and 2006

Overall, the data indicate that the injections of lactate and EOS have been effective in achieving enhanced in-situ biodegradation of the COCs. Most of the monitoring wells have indicated a significant increase in TOC and decreasing concentrations of VOCs. Supporting data, such as VFAs, methane, and field parameters also support this conclusion.

3.2 Installation of Biobarrier DPTs and Injection Wells

During previous groundwater monitoring at SWMU 39, several monitoring wells near the western boundary (such as A39GW030I and A39GW023D) were noted to have TCE and vinyl chloride concentrations sometimes slightly exceeded their respective MCLs (5 and 2 µg/L, respectively). For example, during the 2004 annual monitoring, the TCE concentrations in wells A39GW030I and A39GW023D were 11 and 7 µg/L, respectively. Based on these results, a decision was made to implement a perimeter in-situ groundwater treatment system, as provided for in the CMS report, in 2005. An in-situ anaerobic biodegradation approach was selected to provide compatibility with the approach being implemented in the SWMU 39 Source Areas.

In order to better understand the distribution of VOCs in the aquifer along the western boundary of SWMU 39, groundwater samples were collected in August 2005 using direct-push technology (DPT) methods at seven locations as shown in **Figure 3-14**. At each location, a discrete groundwater sample was obtained at three different depths below land surface (generally at 12, 28 and 38 ft bls). The only exception was at A39GP141, at which a groundwater sample could not be collected from the 12 ft bls interval due to poor yield from the formation.

Results for key COCs for these DPT groundwater samples are summarized in **Table 3-5**. It can be seen in this table that none of the shallowest groundwater samples (collected at approximately 12 ft bls) contained detectable concentrations of VOCs. Most of the detections and all of the MCL exceedances for VOCs occurred in the samples collected at

approximately 28 ft bls. This depth corresponds approximately to the top of a thin clay layer that appears to limit general downward migration of VOCs below this depth. Samples collected below 28 ft bls did not indicate exceedances of the MCLs for the COCs.

Based on these DPT results, an injection well configuration was developed for the biobarrier system. The injection well locations for the biobarrier are shown in **Figure 3-15**.

Each injection well for the biobarrier was installed to a depth of approximately 28 ft bls, with a 5-ft well screen. Construction logs for these wells are provided in **Appendix D**. UIC permitting information is also presented in **Appendix C**.

The injection schedule for the biobarrier is presented in **Table 3-6**. EOS, an emulsified vegetable oil, was used as the substrate to stimulate anaerobic biodegradation. An initial injection of EOS was performed in March 2006.

Monitoring of the performance of the biobarrier system was conducted during 2006, through sampling of groundwater from well A39GW030I, located near injection well A39GW052I. Field parameters were measured on six occasions during 2006 after the injection of substrate. These results are summarized in **Table 3-7**.

Additional parameters (dissolved gases, VFAs, and VOCs) were also measured twice (July and October) during 2006. The results for these analyses are summarized in **Table 3-8**. It can be seen in the table that methane levels increased significantly during 2006, indicating that the injected oil was effective in achieving a strongly reducing environment. Volatile fatty acid analyses showed that acetic acid was present during the July 2006 monitoring event, indicating that the injected oil was effectively fermenting. Results for October 2006 did not detect any VFAs were present, indicating that the oil may have been largely consumed, although the presence of methane during October 2006 suggests that the treatment process was still effective.

VOCs analyzed during July and October 2006 indicate that TCE and DCE are below their respective MCLs and vinyl chloride is slightly above its MCL. Overall, the biobarrier appears to be achieving successful reduction in the VOCs. Because vinyl chloride remains slightly above its MCL, additional injections of substrate into the biobarrier should be implemented to provide additional treatment of VOCs in this area.

TABLE 3-1
Injection Schedule and Volumes for SWMU 39 Source Area
Corrective Measures Implementation Plan, SWMU 39, Zone A, Charleston Naval Complex

Well No.	Date	Substrate	Start Injection	Stop Injection	Total EOS (gallons)	Total Lactate (gallons)	B12 Additive (ml)	Total Solution (gallons)	Substrate Concentration (%)
039GW36D	2/9/2005	EOS	1515	1701	55.0		500.0	605	6.0%
	6/27/2005	EOS	835	1431	51.0		463.0	1,380	2.3%
	4/12/2006	EOS	1400	1600	54.0		470.0	2,500	1.3%
	1/31/2007	EOS	1335	1550	54.0		473.0	2,500	1.3%
039GW39D	2/8/2005	Lactate	1446	1512		11.5	NA	230	3.2%
	6/23/2005	Lactate	1145	1551		12.0	NA	1,380	0.5%
	9/22/2005	Lactate	1008	1119		12.0	NA	1,380	0.5%
	12/20/2005	Lactate	1419	1541		12.0	NA	1,380	0.5%
	4/13/2006	Lactate	0922	1158		43.4	NA	2,500	1.1%
	6/18/2006	Lactate	1440	1715		44.0	NA	2,500	1.1%
	10/4/2006	Lactate	1005	1253		44.0	NA	2,500	1.1%
039GW40D	2/8/2005	Lactate	1224	1253		11.5	NA	230	3.2%
	6/23/2005	Lactate	724	1115		12.0	NA	1,380	0.5%
	9/22/2005	Lactate	1008	1119		12.0	NA	1,380	0.5%
	12/20/2005	Lactate	1419	1541		12.0	NA	1,380	0.5%
	4/11/2006	Lactate	1304	1549		43.4	NA	2,500	1.1%
	6/18/2006	Lactate	1155	1436		44.0	NA	2,500	1.1%
	10/4/2006	Lactate	1005	1253		44.0	NA	2,500	1.1%

TABLE 3-1
Injection Schedule and Volumes for SWMU 39 Source Area
Corrective Measures Implementation Plan, SWMU 39, Zone A, Charleston Naval Complex

Well No.	Date	Substrate	Start Injection	Stop Injection	Total EOS (gallons)	Total Lactate (gallons)	B12 Additive (ml)	Total Solution (gallons)	Substrate Concentration (%)
039GW41D	2/8/2005	Lactate	1138	1209		11.5	NA	230	3.2%
	6/22/2005	Lactate	1127	1540		12.0	NA	1,380	0.5%
	9/21/2005	Lactate	1351	1455		12.0	NA	1,380	0.5%
	12/20/2005	Lactate	1250	1407		12.0	NA	1,380	0.5%
	4/11/2006	Lactate	1020	1244		43.4	NA	2,500	1.1%
	6/18/2006	Lactate	1440	1715		44.0	NA	2,500	1.1%
	10/3/2006	Lactate	1430	0959		44.0	NA	2,500	1.1%
039GW42D	2/8/2005	Lactate	1046	1119		11.5	NA	230	3.2%
	6/21/2005	Lactate	1526	1553		3.3	NA	380	0.5%
	6/22/2005	Lactate	750	1101		8.7	NA	1,000	0.5%
	9/21/2005	Lactate	1351	1455		12.0	NA	1,380	0.5%
	12/20/2005	Lactate	1250	1407		12.0	NA	1,380	0.5%
	4/11/2006	Lactate	1020	1244		43.4	NA	2,500	1.1%
	7/18/2006	Lactate	0903	1136		44.0	NA	2,500	1.1%
	10/3/2006	Lactate	1119	1426		44.0	NA	2,500	1.1%
039GW43D	2/2/2005	Lactate	1410	1446		11.5	NA	230	3.2%
	6/21/2005	Lactate	810	1505		12.0	NA	1,380	0.5%
	9/20/2005	Lactate	844	919		1.5	NA	169	0.5%

TABLE 3-1
Injection Schedule and Volumes for SWMU 39 Source Area
Corrective Measures Implementation Plan, SWMU 39, Zone A, Charleston Naval Complex

Well No.	Date	Substrate	Start Injection	Stop Injection	Total EOS (gallons)	Total Lactate (gallons)	B12 Additive (ml)	Total Solution (gallons)	Substrate Concentration (%)
	9/21/2005	Lactate	1140	1327		10.8	NA	1,239	0.5%
	12/20/2005	Lactate	1125	1242		12.0	NA	1,380	0.5%
	4/11/2006	Lactate	1304	1549		43.4	NA	2,500	1.1%
	7/18/2006	Lactate	1155	1436		44.0	NA	2,500	1.1%
	10/3/2006	Lactate	1430	0959		44.0	NA	2,500	1.1%
039GW44D	2/2/2005	Lactate	1100	1153		11.5	NA	230	3.2%
	6/20/2005	Lactate	1323	1754		12.0	NA	1,380	0.5%
	9/20/2005	Lactate	844	919		1.5	NA	170	0.5%
	9/21/2005	Lactate	1140	1327		10.7	NA	1,234	0.5%
	12/20/2005	Lactate	1125	1242		12.0	NA	1,380	0.5%
	4/13/2006	Lactate	0922	1158		43.4	NA	2,500	1.1%
	7/18/2006	Lactate	0903	1136		44.0	NA	2,500	1.1%
	10/3/2006	Lactate	1119	1426		44.0	NA	2,500	1.1%
039GW47D	2/10/2005	EOS	1052	1225	55.0		552.9	605	6.0%
	6/27/2005	EOS	1542	1925	51.0		463.0	1,380	2.3%
	4/12/2006	EOS	1103	1325	54.0		470.0	2,500	1.3%
	1/31/2007	EOS	1600	1808	54.0		473.0	2,500	1.3%

TABLE 3-1
Injection Schedule and Volumes for SWMU 39 Source Area
Corrective Measures Implementation Plan, SWMU 39, Zone A, Charleston Naval Complex

Well No.	Date	Substrate	Start Injection	Stop Injection	Total EOS (gallons)	Total Lactate (gallons)	B12 Additive (ml)	Total Solution (gallons)	Substrate Concentration (%)
039GW49D	2/9/2005	Lactate	1037	1101		11.5	NA	230	3.2%
	6/23/2005	Lactate	1650	1750		3.3	NA	380	0.5%
	6/24/2005	Lactate	1215	1428		8.7	NA	1,000	0.5%
	9/22/2005	Lactate	1333	1440		12.0	NA	1,380	0.5%
	12/20/2005	Lactate	844	1005		12.0	NA	1,380	0.5%
	4/12/2006	Lactate	0828	1043		43.4	NA	2,500	1.1%
	7/19/2006	Lactate	0817	1040		44.0	NA	2,500	1.1%
	10/4/2006	Lactate	1322	1551		44.0	NA	2,500	1.1%
039GW50D	2/8/2005	Lactate	1532	1558		11.5	NA	230	3.2%
	6/24/2005	Lactate	740	1111		12.0	NA	1,380	0.5%
	9/22/2005	Lactate	1333	1440		12.0	NA	1,380	0.5%
	12/20/2005	Lactate	844	1005		12.0	NA	1,380	0.5%
	4/12/2006	Lactate	0828	1043		43.4	NA	2,500	1.1%
	7/19/2006	Lactate	0817	1040		44.0	NA	2,500	1.1%
	10/4/2006	Lactate	1322	1551		44.0	NA	2,500	1.1%

ml milliliters

NA not applicable

TABLE 3-2
Summary of TOC and VOC Results - Source Area Wells
Corrective Measures Implementation Plan, SWMU 39, Zone A, Charleston Naval Complex

			VOCs (µg/L)		
Well	**Date**	**TOC (mg/L)**	**TCE**	**cis-1,2-DCE**	**Vinyl Chloride**
A39GW035D	17-Jan-05	7.9	268	193	4.3
	05-Apr-05	8.15	302	248	4.4
	09-May-05	8.88	299	234	4.4
	14-Jun-05	7.56	NA	NA	NA
	29-Jul-05	7.05	NA	NA	NA
	01-Sep-05	7.33	NA	NA	NA
	30-Nov-05	11.9	130	318	5.3
	13-Jul-06	11.1	25.6	126	59.7
	17-Aug-06	13	NA	NA	NA
	19-Sep-06	13.3	NA	NA	NA
	30-Oct-06	15.8	20.9	58.8	94.1
	05-Dec-06	14.5	NA	NA	NA
A39GW037D	17-Jan-05	5.06	657	766	28.6
	05-Apr-05	3.83	683	859	26.5
	09-May-05	3.7	682	806	29.3
	14-Jun-05	4.96	NA	NA	NA
	29-Jul-05	5.68	NA	NA	NA
	01-Sep-05	60.6	NA	NA	NA
	30-Nov-05	225	353	759	21.8
	13-Jul-06	NA	58.8	622	13.3
	17-Aug-06	1120	NA	NA	NA
	19-Sep-06	581	NA	NA	NA
	30-Oct-06	470	82.7	530	13
	05-Dec-06	1160	NA	NA	NA
A39GW038D	17-Jan-05	4.36	240	396	18.3
	14-Jun-05	9.08	NA	NA	NA
	30-Nov-05	165	77.2	412	10.4
	13-Jul-06	NA	18.1	188	4

TABLE 3-2
Summary of TOC and VOC Results - Source Area Wells
Corrective Measures Implementation Plan, SWMU 39, Zone A, Charleston Naval Complex

			VOCs (µg/L)		
Well	**Date**	**TOC (mg/L)**	**TCE**	**cis-1,2-DCE**	**Vinyl Chloride**
	17-Aug-06	847	NA	NA	NA
	19-Sep-06	876	NA	NA	NA
	30-Oct-06	906	1.5	152	3.1
	05-Dec-06	909	NA	NA	NA
A39GW045D	17-Jan-05	5.6	733	711	22.8
	14-Jun-05	5.67	NA	NA	NA
	30-Nov-05	4.05	624	861	29.6
	13-Jul-06	NA	576	799	29.8
	17-Aug-06	83.4	NA	NA	NA
	19-Sep-06	131	NA	NA	NA
	30-Oct-06	290	340	761	26.3
	05-Dec-06	317	NA	NA	NA
A39GW046D	17-Jan-05	2.16	6.4	53.7	3.1
	14-Jun-05	1.99	NA	NA	NA
	30-Nov-05	1.93	10.1	82.7	4.1
	13-Jul-06	NA	9.6	89.8	5.9
	17-Aug-06	2.04	NA	NA	NA
	19-Sep-06	2.93	NA	NA	NA
	30-Oct-06	1.97	12.6	111	7.6
	05-Dec-06	2.79	NA	NA	NA
A39GW048D	17-Jan-05	2.11	41.7	177	8
	14-Jun-05	1.83	NA	NA	NA
	29-Jun-05	2.17	NA	NA	NA
	30-Nov-05	32.6	23.6	231	6.5
	13-Jul-06	NA	4.4	232	5.7
	17-Aug-06	485	NA	NA	NA
	19-Sep-06	492	NA	NA	NA
	30-Oct-06	843	5.6	178	5.4

TABLE 3-2
Summary of TOC and VOC Results - Source Area Wells
Corrective Measures Implementation Plan, SWMU 39, Zone A, Charleston Naval Complex

			VOCs (µg/L)		
Well	**Date**	**TOC (mg/L)**	**TCE**	**cis-1,2-DCE**	**Vinyl Chloride**
	05-Dec-06	704	NA	NA	NA

DCE	dichloroethene
mg/L	milligrams per liter
µg/L	micrograms per liter
NA	not applicable
TCE	trichloroethene
TOC	total organic carbon
VOC	volatile organic compound

TABLE 3-3
Summary of Results for Field Parameters - SWMU 39 Source Area Wells
Corrective Measures Implementation Plan, SWMU 39, Zone A, Charleston Naval Complex

Well	Date	pH (std units)	Specific Conductance (Siemens/meter)	Turbidity (NTU)	Dissolved Oxygen (mg/L)	Temperature °C	ORP (mV)
A39GW035D	4/5/2005	6.34	1.02	0	0.19	21.42	-139
	5/9/2005	6.63	1.17	18	2.04	21.54	-102
	6/14/2005	6.62	1.1	0	0	21.77	-146
	7/29/2005	6.44	0.81	1	1.73	22.32	-147
	9/1/2005	6.38	0.836	0	1.6	21.96	-153
	11/30/2005	6.49	1.18	0	1.26	20.94	-177
	7/13/2006	6.41	0.129	172	0.37	21.88	-159
	8/17/2006	6.96	1.52	8.1	5.77	24.85	-196
	9/19/2006	6.96	1.51	0	4.03	25.19	-191
	10/30/2006	6.63	1.45	9.8	0.35	21.86	-184
	12/5/2006	6.37	1.52	2.5	0.51	21.32	-188
	3/8/2007	6.66	1.58	0	0.34	21.1	-215
A39GW037D	4/5/2005	6.14	0.807	0	0.27	21.88	-109
	5/9/2005	6.11	1.56	0	2.63	21.56	150
	6/14/2005	6.46	1.44	2	0	21.95	-132
	7/29/2005	6.23	0.9	0	1.59	22.33	-152
	9/1/2005	6.36	1.18	0	1.34	21.93	-128
	11/30/2005	6.65	2.13	0.7	1.16	21.5	-163
	7/13/2006	6.66	0.229	12	0.31	22.01	-203

TABLE 3-3
Summary of Results for Field Parameters - SWMU 39 Source Area Wells
Corrective Measures Implementation Plan, SWMU 39, Zone A, Charleston Naval Complex

Well	Date	pH (std units)	Specific Conductance (Siemens/meter)	Turbidity (NTU)	Dissolved Oxygen (mg/L)	Temperature °C	ORP (mV)
	8/17/2006	7.22	3.2	0	5.48	24.41	-192
	9/19/2006	7.1	3.31	500	3.82	24.49	-198
	10/30/2006	6.73	3.23	0	0.99	22.57	-193
	12/5/2006	6.46	4.09	235	1.37	21.53	-194
	3/8/2007	6.75	3.16	9	0.29	21.6	-185
A39GW038D	6/14/2005	7.73	1.45	0	2.16	21.83	-171
	11/30/2005	6.91	1.64	6.8	1.92	21.81	-258
	7/13/2006	6.76	4.98	0	0.86	22.11	-250
	8/17/2006	7.46	5.21	0	5.37	25.04	-233
	9/19/2006	7.07	4.87	0	1	22.4	-251
	10/30/2006	7.11	4.95	5.7	0.37	22.42	-238
	12/5/2006	6.92	5.94	16.5	1.5	21.33	-191
	3/8/2007	7.3	5.38	12.4	0.52	21.9	-236
A39GW045D	6/14/2005	6.86	0.95	0	2.18	22.28	-147
	11/30/2005	6.32	1.25	4.2	1.01	21.64	-134
	7/13/2006	6.11	2.37	0	0.81	22.49	-111
	8/17/2006	6.95	2.33	4.5	5.61	24.73	-138
	9/19/2006	6.97	2.09	8.5	3.67	24.96	-150

TABLE 3-3
Summary of Results for Field Parameters - SWMU 39 Source Area Wells
Corrective Measures Implementation Plan, SWMU 39, Zone A, Charleston Naval Complex

Well	Date	pH (std units)	Specific Conductance (Siemens/meter)	Turbidity (NTU)	Dissolved Oxygen (mg/L)	Temperature °C	ORP (mV)
	10/30/2006	6.72	2.38	4.8	0.34	22.85	-200
	12/5/2006	6.5	2.27	0	0.49	21.85	-180
	3/8/2007	6.81	2	13.1	0	22.4	-176
A39GW046D	4/5/2005	5.68	0.195	9	0	23.2	11
	11/30/2005	5.65	0.14	0	1.54	22.83	44
	7/13/2006	5.12	0.21	0	0.9	23.33	76
	8/17/2006	5.99	0.197	3.3	5.55	25.33	71
	9/19/2006	5.95	0.183	25	3.66	25.82	87
	10/30/2006	5.9	0.225	5.3	0.49	23.69	59
	12/5/2006	5.51	0.21	0	0.55	23.13	86
	3/8/2007	5.81	0.23	0	0.79	22.8	84
A39GW048D	4/5/2005	6.22	0.242	0	2.19	23.68	-10
	6/29/2005	6.35	0.357	0	2.02	22.52	-53
	11/30/2005	5.96	0.561	6.8	1.25	22.38	-221
	7/13/2006	6.4	89	0	0.32	23.09	-172
	8/17/2006	6.93	2.82	0	5.43	25.25	-184
	9/19/2006	6.52	2.26	0	0.97	23.32	-189
	10/30/2006	6.34	1.2	16.1	0.62	21.87	-151

TABLE 3-3
Summary of Results for Field Parameters - SWMU 39 Source Area Wells
Corrective Measures Implementation Plan, SWMU 39, Zone A, Charleston Naval Complex

Well	Date	pH (std units)	Specific Conductance (Siemens/meter)	Turbidity (NTU)	Dissolved Oxygen (mg/L)	Temperature °C	ORP (mV)
	12/5/2006	6.41	3.38	131	1.43	22.85	-196
	3/8/2007	6.73	2.2	1.1	0.55	22.5	-188

mg/L milligrams per liter

mV millivolts

NTU nephelometric turbidiy units

TABLE 3-4
Summary of Results for Dissolved Gases and Volatile Fatty Acids - SWMU 39 Source Area Wells
Corrective Measures Implementation Plan, SWMU 39, Zone A, Charleston Naval Complex

		Dissolved Gases (µg/L)			Volatile Fatty Acids (mg/L)					
Station ID	**Date Sampled**	**Methane**	**Ethene**	**Ethane**	**Pyruvic**	**Lactic**	**Formic**	**Acetic**	**Propionic**	**Butyric**
A39GW035D	4/5/2005	1,050	< 3	< 3	< 4	< 1	< 1	< 1	< 1	< 1
A39GW035D	5/9/2005	684	< 15	< 16	< 4	< 1	< 1	< 1	< 1	< 1
A39GW035D	6/14/2005	1,607	< 3	< 3	-	-	-	-	-	-
A39GW035D	7/29/2005	2,707	< 3	< 3	-	-	-	-	-	-
A39GW035D	9/1/2005	1,464	< 29	< 31	-	-	-	-	-	-
A39GW035D	11/30/2005	86,828	< 58	< 62	-	-	-	-	-	-
A39GW035D	7/14/2006	101,750	< 146	< 156	< 4	< 1	< 1	13.8	< 1	< 1
A39GW035D	10/30/2006	37,504	< 583	< 625	< 4	< 1	< 1	< 1	< 1	< 1
A39GW037D	4/5/2005	1,330	< 3	< 3	< 4	< 1	< 1	< 1	< 1	< 1
A39GW037D	5/9/2005	1,948	< 58	< 63	< 4	< 1	< 1	< 1	< 1	< 1
A39GW037D	6/14/2005	1,191	< 3	< 3	-	-	-	-	-	-
A39GW037D	7/29/2005	3,267	< 3	< 3	-	-	-	-	-	-
A39GW037D	9/1/2005	3,174	< 146	< 156	< 4	< 1	< 1	< 1	< 1	< 1
A39GW037D	11/30/2005	251,922	< 58	< 62	-	-	-	-	-	-
A39GW037D	7/14/2006	149,335	< 146	< 156	< 4	< 1	< 1	304.3	2,824	< 1
A39GW037D	10/30/2006	149,648	< 583	< 625	< 4	< 1	< 1	430.7	532.2	17
A39GW038D	6/14/2005	592	< 3	< 3	-	-	-	-	-	-
A39GW038D	11/30/2005	599,824	< 58	< 62	-	-	-	-	-	-

TABLE 3-4
Summary of Results for Dissolved Gases and Volatile Fatty Acids - SWMU 39 Source Area Wells
Corrective Measures Implementation Plan, SWMU 39, Zone A, Charleston Naval Complex

		Dissolved Gases (µg/L)			Volatile Fatty Acids (mg/L)					
Station ID	**Date Sampled**	**Methane**	**Ethene**	**Ethane**	**Pyruvic**	**Lactic**	**Formic**	**Acetic**	**Propionic**	**Butyric**
A39GW038D	7/14/2006	6,861	< 146	< 156	< 4	< 1	< 1	811.9	310.5	< 1
A39GW038D	10/30/2006	173,152	< 4,667	< 5,000	< 4	< 1	< 1	1,234	736.1	31.9
A39GW045D	6/14/2005	2,098	< 3	< 3	-	-	-	-	-	-
A39GW045D	11/30/2005	48,322	< 58	< 62	-	-	-	-	-	-
A39GW045D	7/14/2006	124,640	< 146	< 156	< 4	< 1	< 1	< 1	< 1	< 1
A39GW045D	10/30/2006	5,285	< 29	< 29	< 4	< 1	< 1	468.4	1,094	2
A39GW046D	6/14/2005	331	< 3	< 3	-	-	-	-	-	-
A39GW046D	11/30/2005	5,370	< 58	< 62	-	-	-	-	-	-
A39GW046D	7/14/2006	538.9	< 29	< 31	< 4	< 1	< 1	< 1	< 1	< 1
A39GW046D	10/30/2006	1,520	< 29	52.3	< 4	< 1	< 1	< 1	< 1	< 1
A39GW048D	6/14/2005	433	< 3	< 3	-	-	-	-	-	-
A39GW048D	11/30/2005	46,792	< 58	< 62	-	-	-	-	-	-
A39GW048D	7/14/2006	112,835	< 146	< 156	< 4	< 1	< 1	89.6	47.7	< 1
A39GW048D	10/30/2006	102,096	< 1,167	< 1,250	< 4	< 1	< 1	685.2	811.7	110

- Not analyzed

mg/L milligrams per liter

µg/L micrograms per liter

TABLE 3-5
Summary of COC Results for Biobarrier DPT Samples
Corrective Measures Implementation Plan, SWMU 39, Zone A, Charleston Naval Complex

		VOCs (µg/L)		
Station ID	**Depth (ft bls)**	**TCE**	**cis-1,2-DCE**	**Vinyl Chloride**
A39GP135	12	< 1	< 1	< 1
A39GP135	28	4.3	15.3	**2.7**
A39GP135	38	< 1	< 1	< 1
A39GP136	12	< 1	0.82 J	< 1
A39GP136	28	**5.2**	22.2	**4**
A39GP136	38	< 1	< 1	< 1
A39GP137	12	< 1	< 1	< 1
A39GP137	28	**8.5**	16.9	**3.4**
A39GP137	38	< 1	6.5	1.4
A39GP138	12	< 1	< 1	< 1
A39GP138	28	**8.8**	26.1	**4.6**
A39GP138	38	< 1	< 1	< 1
A39GP139	12	< 1	< 1	< 1
A39GP139	28	0.81 J	4.5	**1**
A39GP139	38	1.1	2.6	0.64
A39GP140	12	< 1	< 1	< 1
A39GP140	28	4.8	32.4	**5.5**
A39GP140	38	< 1	1.6	< 1
A39GP141	28	0.32	15.8	**2.5**
A39GP141	38	< 1	0.34	< 1

COC chemical of concern
DCE dichloroethene
DPT direct-push technology
ft bls feet below land surface
µg/L micrograms per liter
TCE trichloroethene

TABLE 3-6
Injection Schedule and Volumes for SWMU 39 Biobarrier
Corrective Measures Implementation Plan, SWMU 39, Zone A, Charleston Naval Complex

Well No.	Date	Substrate	Start Injection	Stop Injection	Total EOS (gallons)	B12 Additive (ml)	Total Solution (gallons)	Substrate Concentration (%)
039GW051I	3/31/2006	EOS	0945	1507	79.2	692	3,672	1.3%
039GW052I	3/30/2006	EOS	1451	1630				
039GW052I (cont.)	3/31/2006	EOS	0740	934	79.2	692	3,672	1.3%
039GW053I	3/31/2006	EOS	0945	1505	79.2	692	3,672	1.3%
039GW054I	3/30/2006	EOS	0845	1448	79.2	692	3,672	1.3%
039GW055I	3/29/2006	EOS	1131	1645	79.2	692	3,672	1.3%
039GW056I	3/30/2006	EOS	0845	1448	79.2	692	3,672	1.3%
039GW057I	3/29/2006	EOS	1131	1459	79.2	692	3,672	1.3%
039GW058I	3/29/2006	EOS	0821	1130	79.2	692	3,672	1.3%
039GW059I	3/28/2006	EOS	1249	1544	79.2	692	3,672	1.3%
039GW060I	3/28/2006	EOS	0930	1242	79.2	692	3,672	1.3%

ml milliliters

TABLE 3-7
Summary of Field Results for the Biobarrier
Corrective Measures Implementation Plan, SWMU 39, Zone A, Charleston Naval Complex

Station ID	Date	pH (std units)	Specific Conductance (Siemens/cm)	Turbidity (NTU)	Dissolved Oxygen (mg/L)	Temperature °C	ORP (mV)
A39GW030I	4/28/2006	6.28	1.15	8.1	1.15	20.47	-269
A39GW030I	7/13/2006	6.25	1.46	0	0.61	21.13	-270
A39GW030I	8/17/2006	6.78	1.11	0	5.56	22.98	-146
A39GW030I	9/19/2006	6.39	0.99	0	1.03	21.44	-124
A39GW030I	10/30/2006	6.34	1.13	7.9	0.41	21.65	-134
A39GW030I	12/5/2006	6.15	1.03	4.75	0.5	21.33	-137

cm centimeters

mg/L milligrams per liter

mV millivolts

NTU nephelometric turbidiy units

TABLE 3-8
Summary of Performance Data for the Biobarrier
Corrective Measures Implementation Plan, SWMU 39, Zone A, Charleston Naval Complex

		Dissolved Gases (µg/L)			Volatile Fatty Acids (mg/L)						VOCs (µg/L)		
Station ID	**Date Sampled**	**Methane**	**Ethene**	**Ethane**	**Pyruvic**	**Lactic**	**Formic**	**Acetic**	**Propionic**	**Butyric**	**TCE**	**cis-1,2-DCE**	**Vinyl Chloride**
A39GW030I	7/13/2006	6,371	< 29	< 31	< 4	< 1	< 1	13.8	< 1	< 1	4.8	14.4	2.4
A39GW030I	10/30/2006	25,588	< 1,167	1,250	< 4	< 1	< 1	< 1	< 1	< 1	4.7	13.3	2.7

DCE dichloroethene

mg/L milligrams per liter

µg/L micrograms per liter

TCE trichloroethene

VOC volatile organic compound

NOTE: Original figure created in color

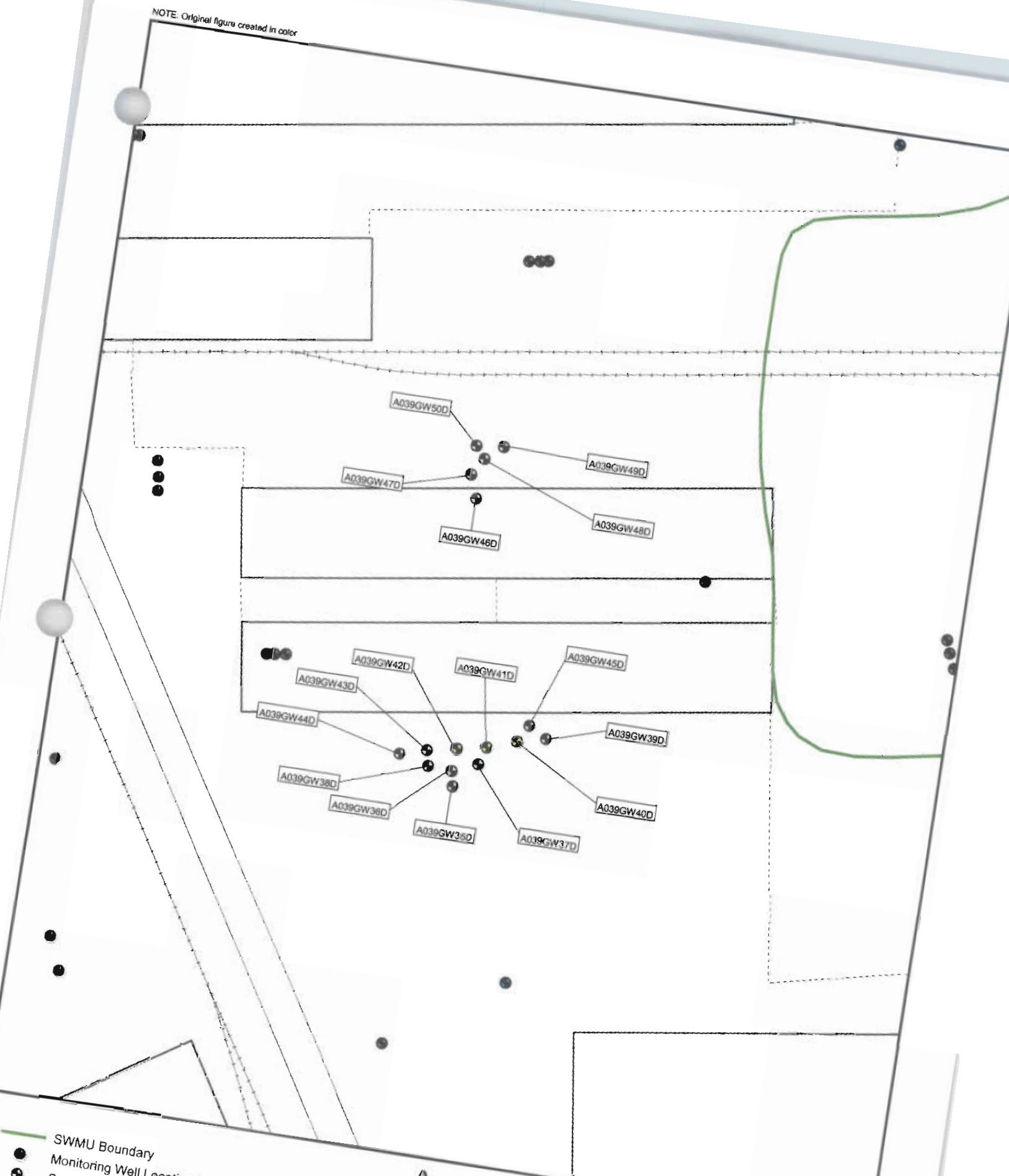

Figure 3-1
SWMU 39 Source Area Wells
Zone A
Charleston Naval Complex

c:\18gis\cnc\cnc-egis.apr, Date: 09 Oct 2006 14:57, User: DWILLIAM, EGIS: Charleston Naval Complex, Plan 4 SWMU

FIGURE 3-2
TOC in Well 39GW48D

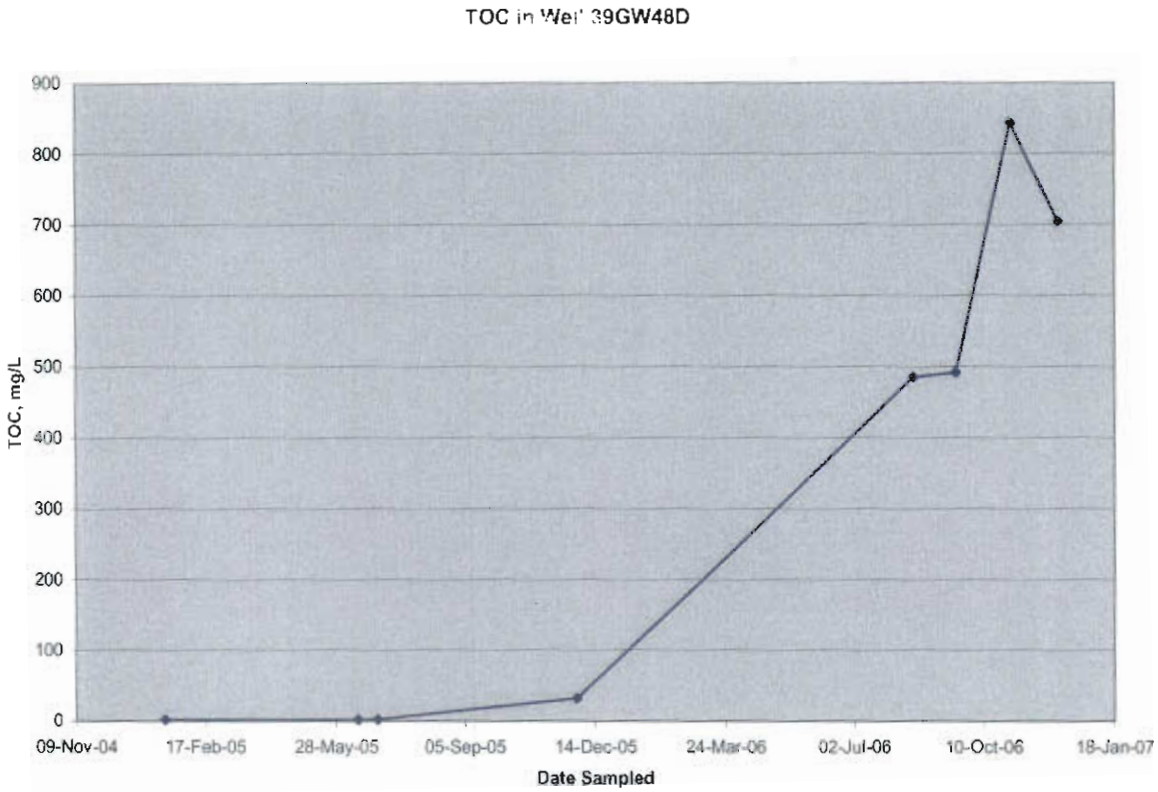

FIGURE 3-3
VOCs in Well 39GW48D

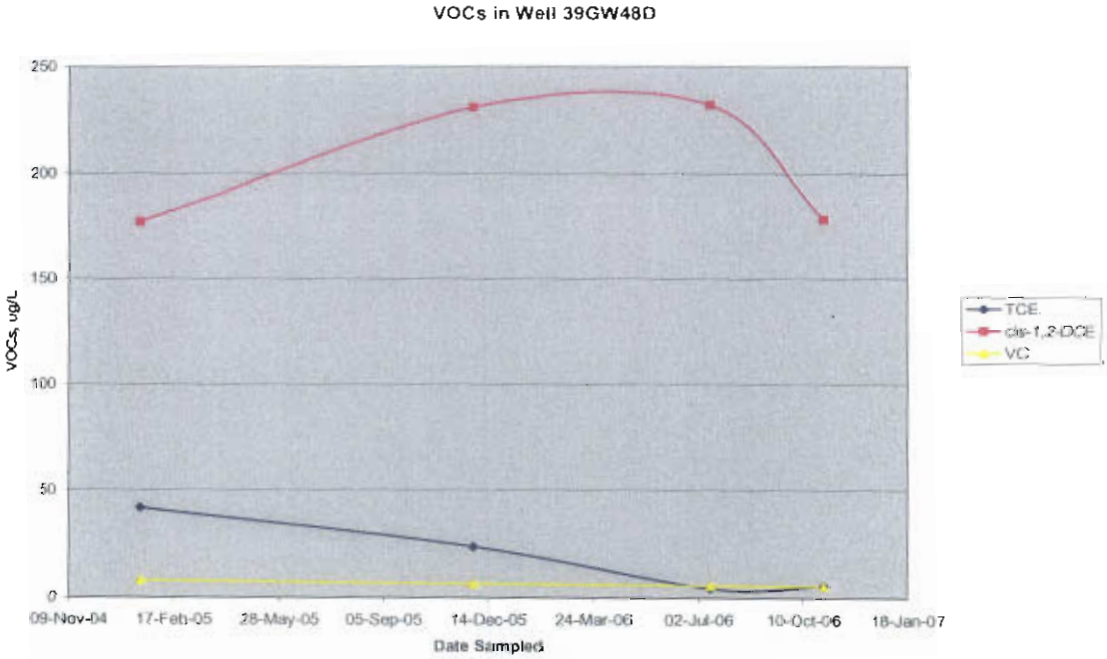

FIGURE 3-4
TOC in 39GW46D

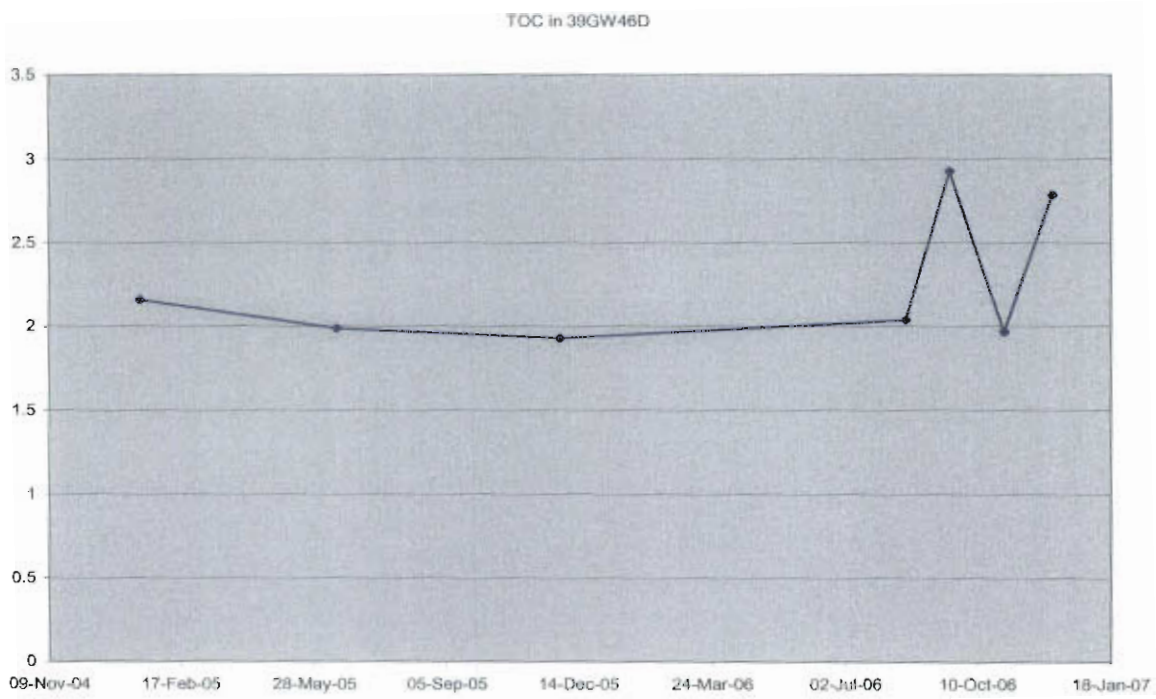

FIGURE 3-5
VOCs in 39GW46D

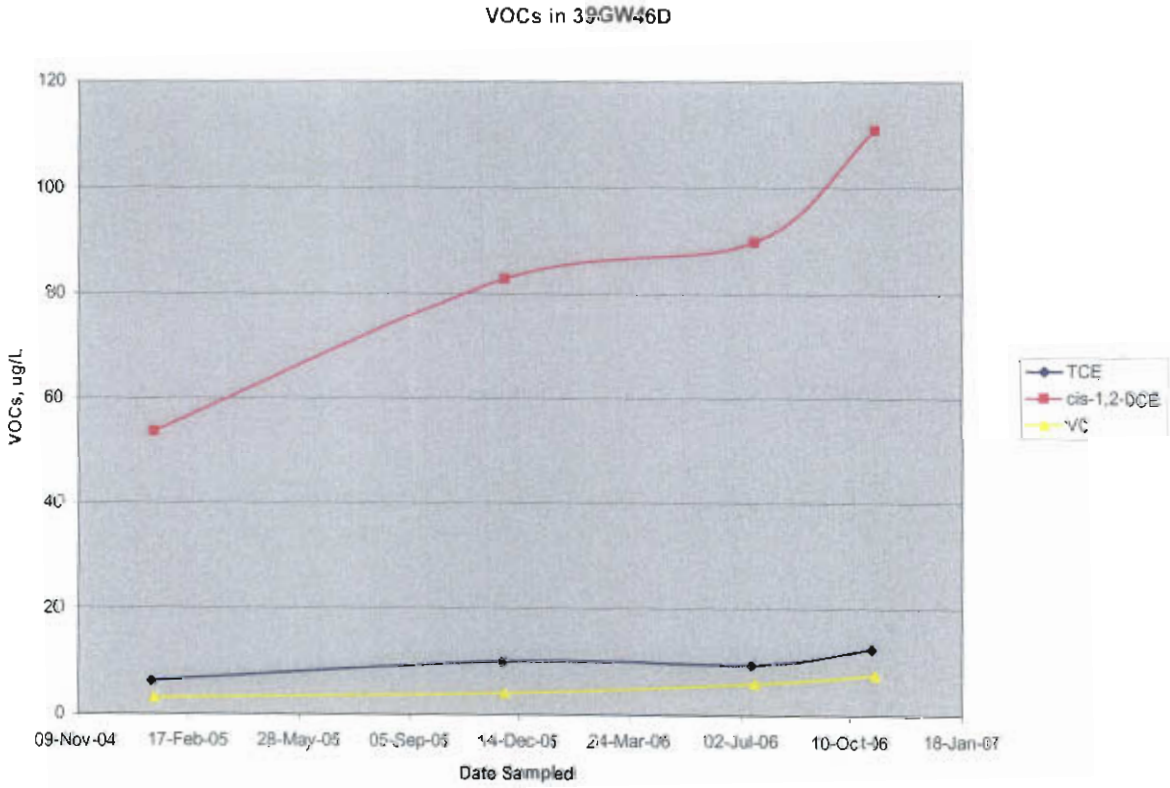

FIGURE 3-6
TOC in Well 39GW35D

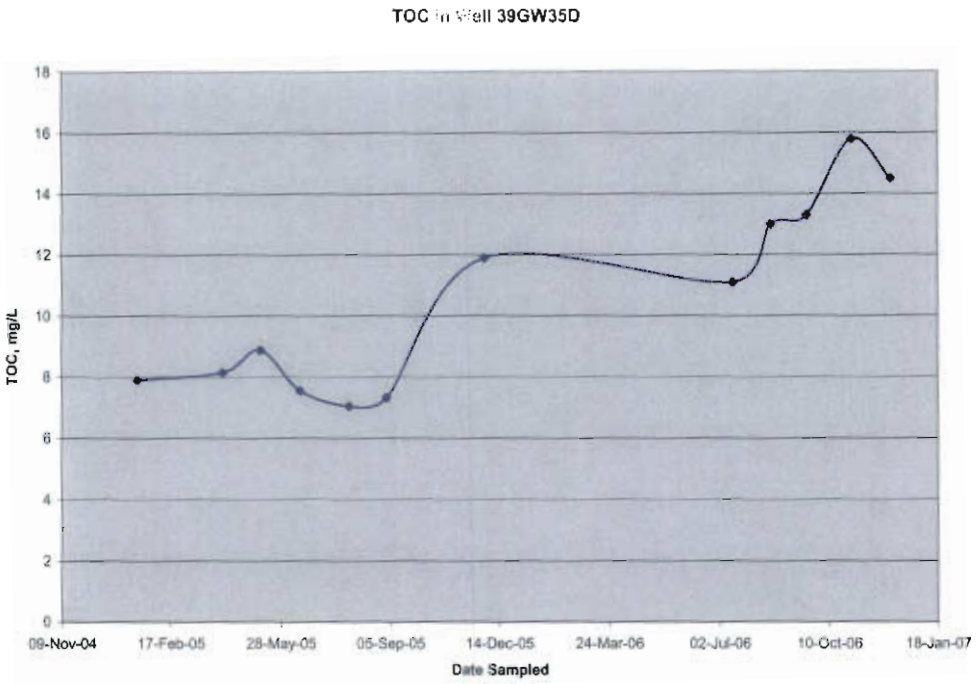

FIGURE 3-7
VOCs in Well 39GW35D

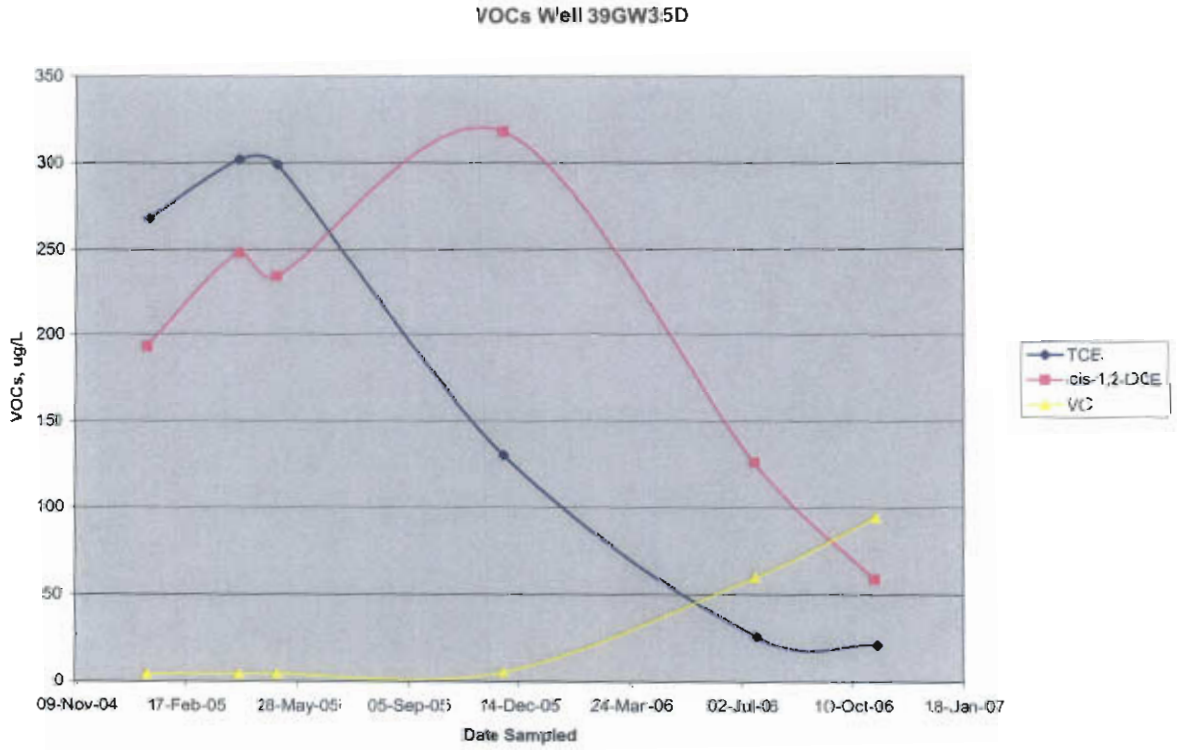

FIGURE 3-8
TOC in Well 39GW37D

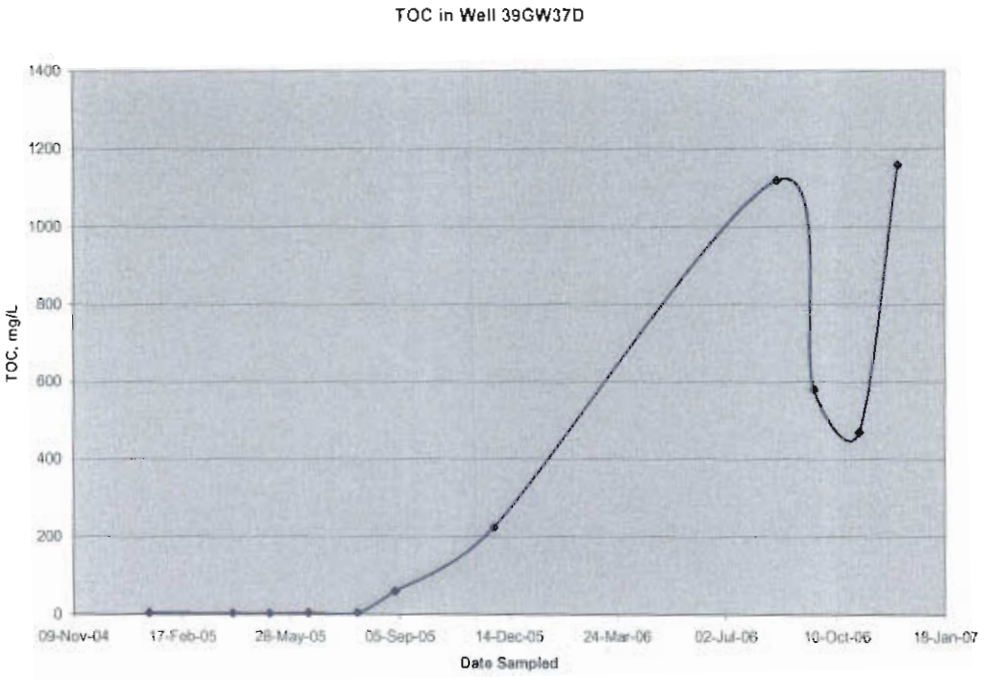

FIGURE 3-9
VOCs in Well 39GW37D

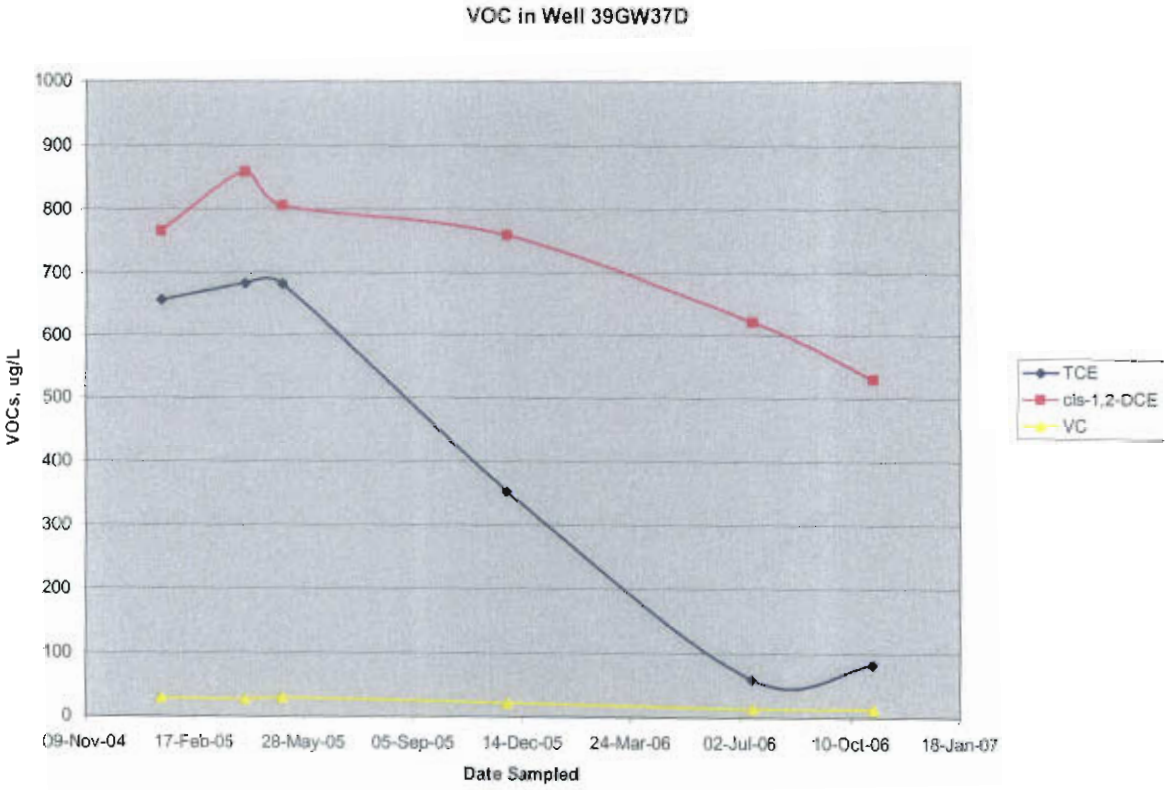

FIGURE 3-10
TOC in Well 39GW38D

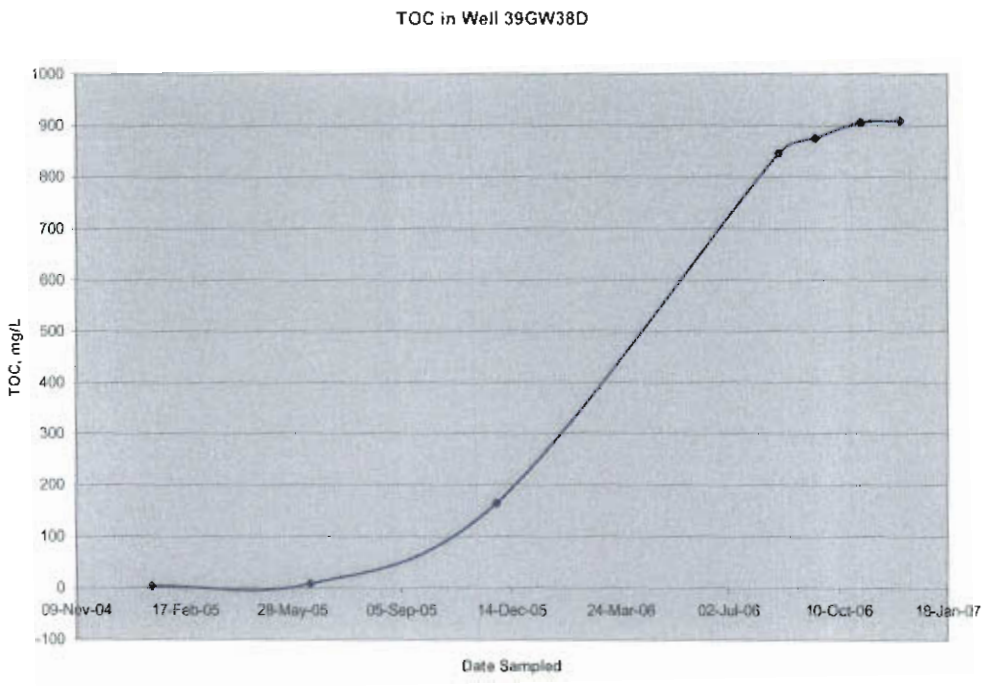

FIGURE 3-11
VOCs in Well 39GW38D

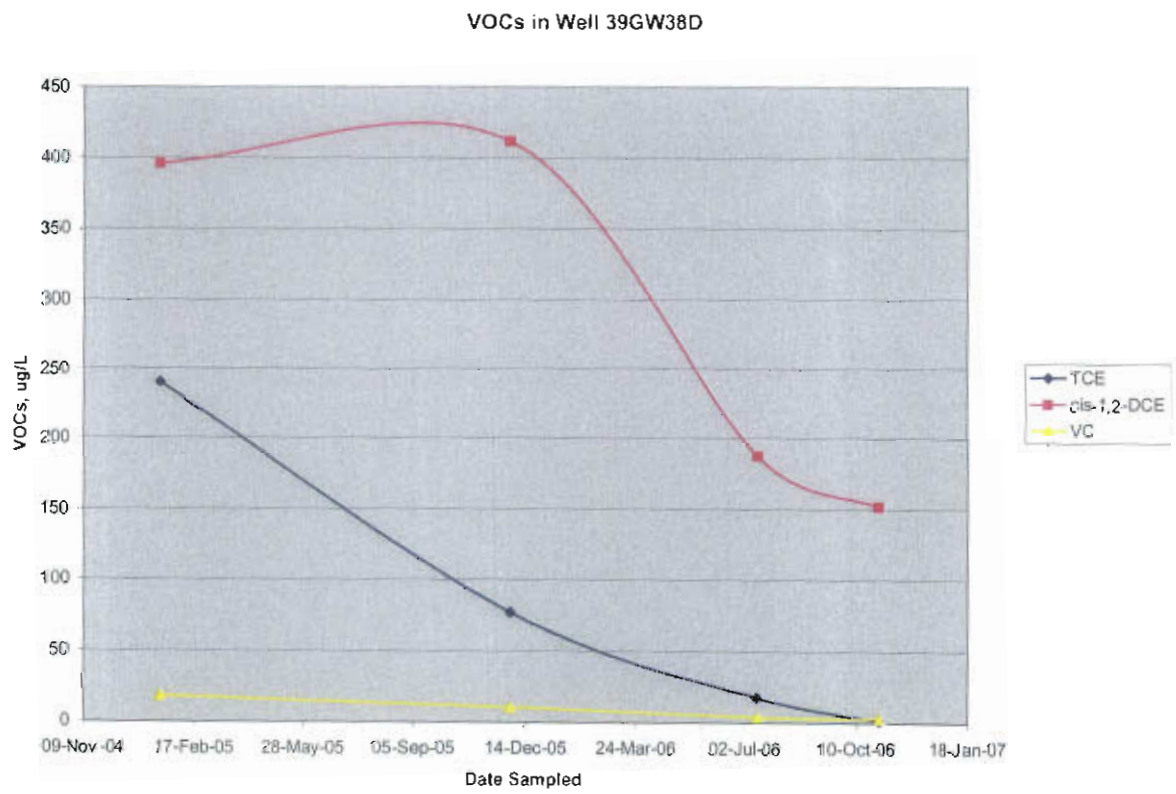

FIGURE 3-12
TOC in Well 39GW45D

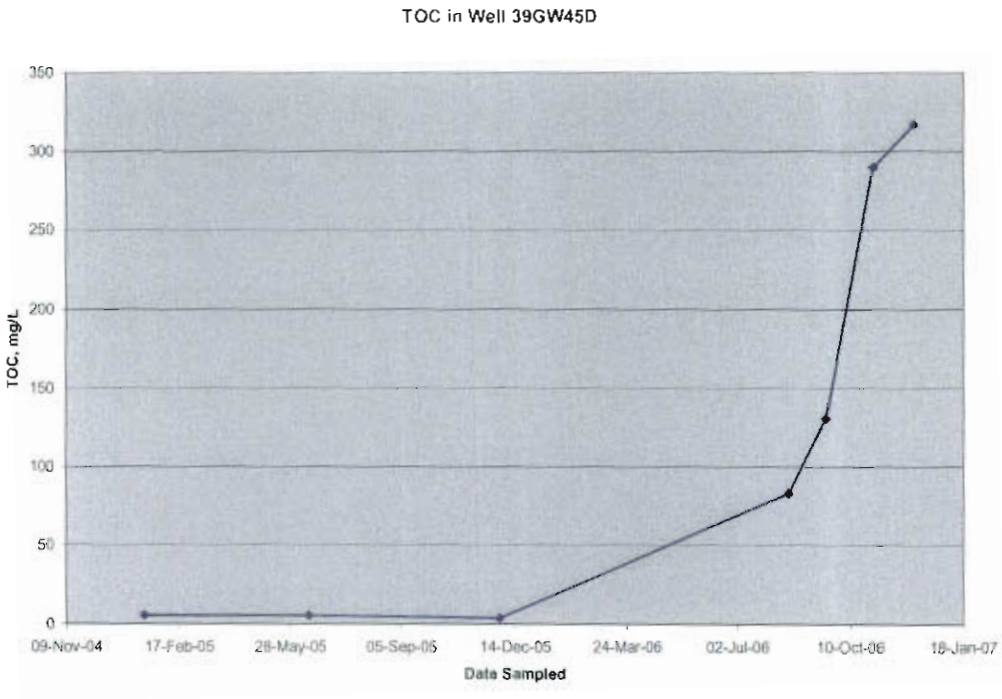

FIGURE 3-13
VOCs in 39GW45D

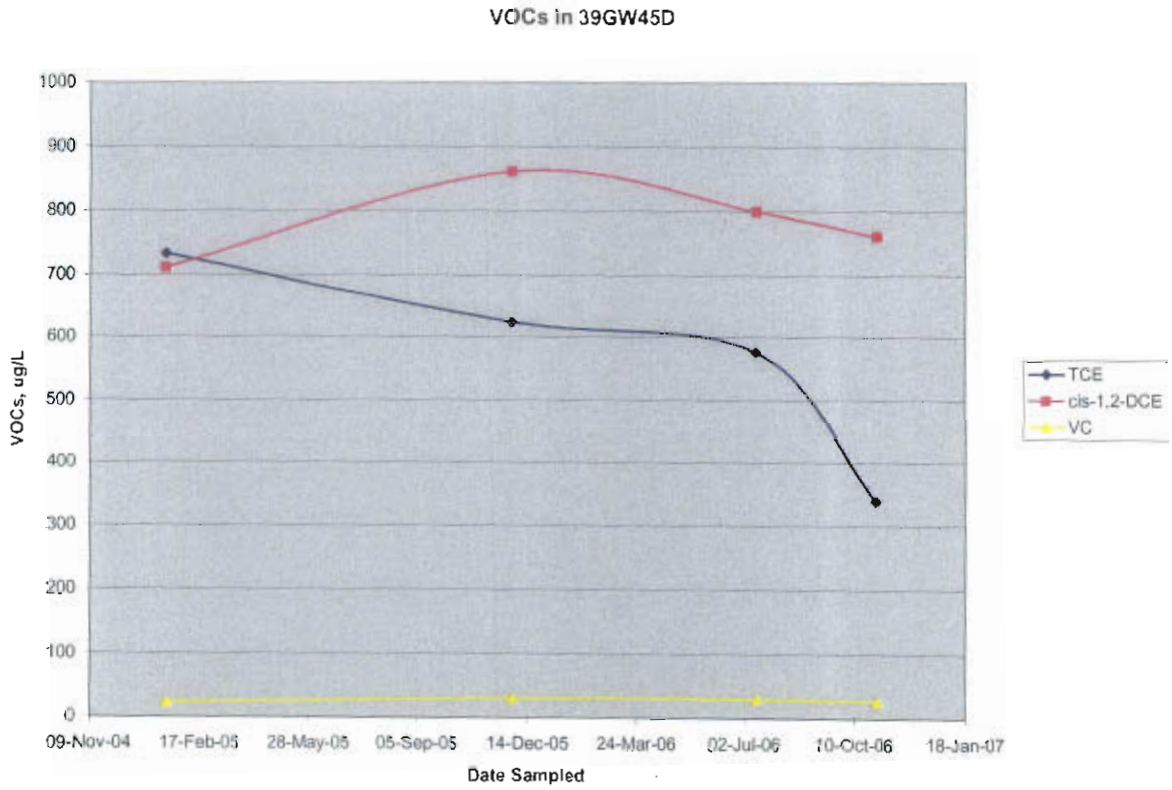

NOTE: Aerial Photo Date is 1997
NOTE: Original figure created in color

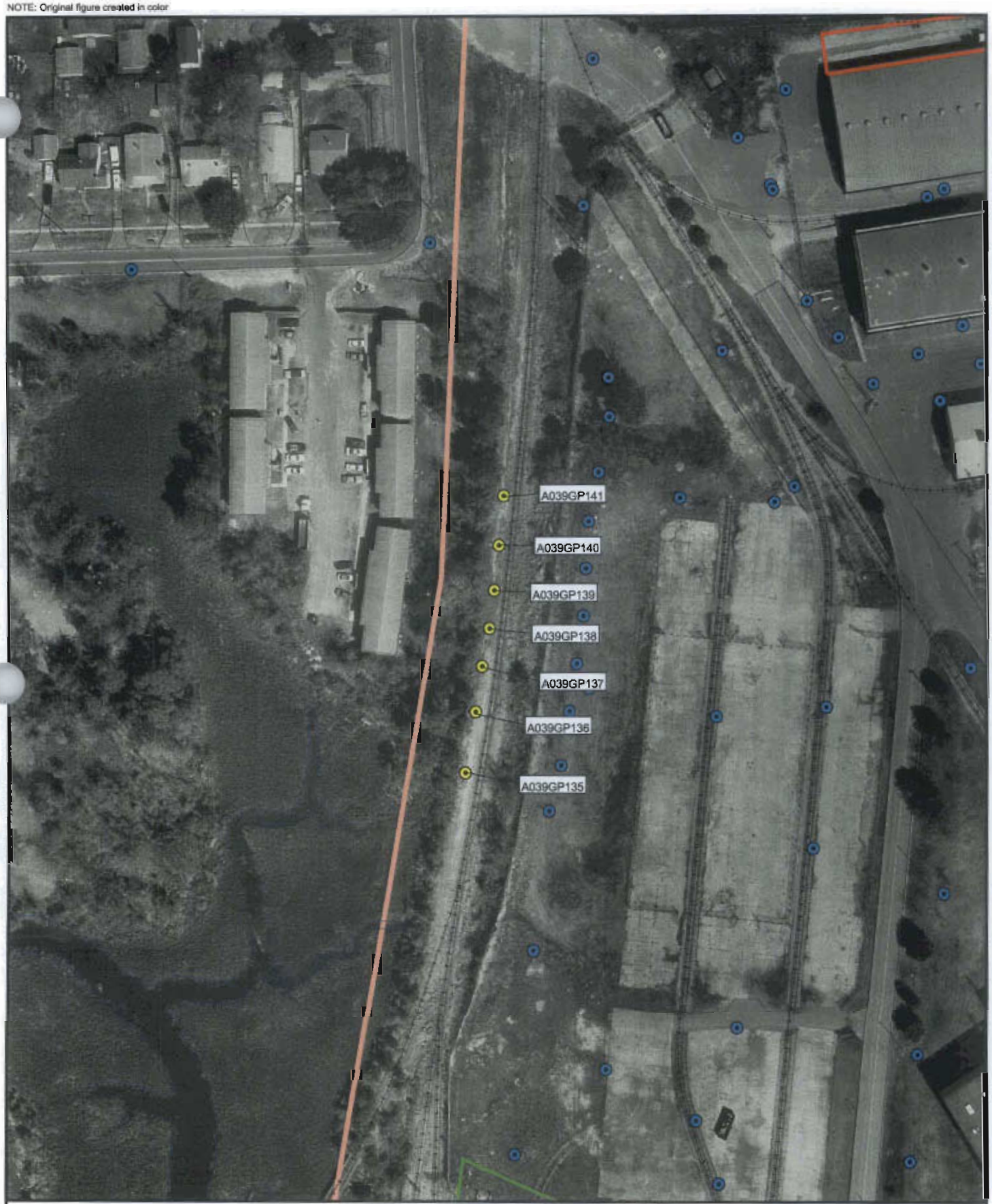

AOC Boundary
Zone Boundary
SWMU Boundary
Groundwater Sampling Location
DPT Sample Location

N

0 90 180 Feet

Figure 3-14
DPT Sampling Locations
SWMU 39 Biobarrier
Charleston Naval Complex

File Path: c:\18\pls\pro\soo-agls.apr, Date: 19 Mar 2

NOTE: Aerial Photo Date is 1997
NOTE: Original figure created in color

Abandoned
Active

N

0 80 160 Feet

1 inch = 97.7658 feet

Figure 3-15
Location of Biobarrier Wells
SWMU 39
Charleston Naval Complex

File Path: c:\18gis\cnc\cnc-egis.apr, Date: 16 Mar 2007 16:11, User: DWILLIAM, EGIS: Charleston Naval Complex - Figure 3-14 Location of Biobarrier Wells

SECTION 4.0

Recommendations for Further Implementation of Corrective Measures

4.0 Recommendations for Further Implementation of Corrective Measures

4.1 Further Implementation of Corrective Measures in Source Area TTAs

The data collected during the implementation of the Phase II IMWP have demonstrated that in-situ anaerobic biodegradation of VOCs is a viable groundwater treatment method for SWMU 39. Both the lactate and the EOS substrates were effective in achieving conditions supporting of reductive dechlorination and the results indicate that significant VOC reductions have been achieved within the two source area TTAs.

The most recent TOC data indicate that as much as 1,000 mg/L of TOC is present in some portions of the source area TTAs. These data indicate that adequate organic carbon is present. Additional substrate injections are not required until the TOC is consumed.

TOC in source area monitoring wells should continue to be monitored periodically during 2007. When the TOC drops to approximately 50 to 100 mg/L, additional substrate should be injected into the wells. It is recommended that EOS be used for subsequent injections since it is longer lived than lactate and will decrease the required frequency of injection.

Groundwater monitoring should continue to further track the progress of remediation and provide data to indicate when additional substrate injections should be performed. It is expected that additional substrate injections will be necessary in the source area TTAs for up to several additional years.

4.2 Further Implementation of Corrective Measures in the Biobarrier Area

The data collected since implementation of the biobarrier indicate that it has been effective in establishing reducing conditions. TCE and cis-1,2-DCE concentrations in well A39GW030I have remained below their respective MCL and vinyl chloride has been reduced to close to its MCL. Additional injection of substrate (EOS) and monitoring of groundwater in this area is recommended to provide further treatment of VOCs in groundwater in this area.

It is expected that additional substrate injections will be necessary in the biobarrier area for up to several additional years.

An updated operations and maintenance (O&M) plan that will include further recommendations for groundwater monitoring will be prepared for SWMU 39 during 2007.

4.3 Redevelopment Activities at SWMU 39

During preparation of this CMIP, CH2M HILL and the Navy received Dig Permit Request # 189 from SPAWARS, a department of the Navy, regarding proposed new activities at SWMU 39. The proposed activities involve the refurbishment of military vehicles intended to be deployed to Iraq. The proposed location for these refurbishment activities is shown in **Figure 4-1**.

A meeting to discuss these proposed activities and the Dig Permit was held on March 20, 2007 at the CNC. Representatives from CH2M HILL and the Navy attended the meeting. Based on these discussions, it was requested that CH2M HILL and the Navy close wells that are not essential in this area, to the extent possible. The well heads on remaining wells would be strengthened or reinforced if necessary. The injection wells at TTA 1B were noted to be likely unaffected as activities were not expected to occur in that portion of the site.

Based on a review of the available data, a decision was made to close the following wells:

- A39GW007
- A39GW017
- A39GW17I
- A39GW17D
- A39GW021
- A39GW21I
- A39GW21D
- A002GW003
- A002GW008

The remaining wells will be further protected using either bollards or reinforcement of the well head. These activities are being undertaken immediately to support the redevelopment activities requested by SPAWARS.

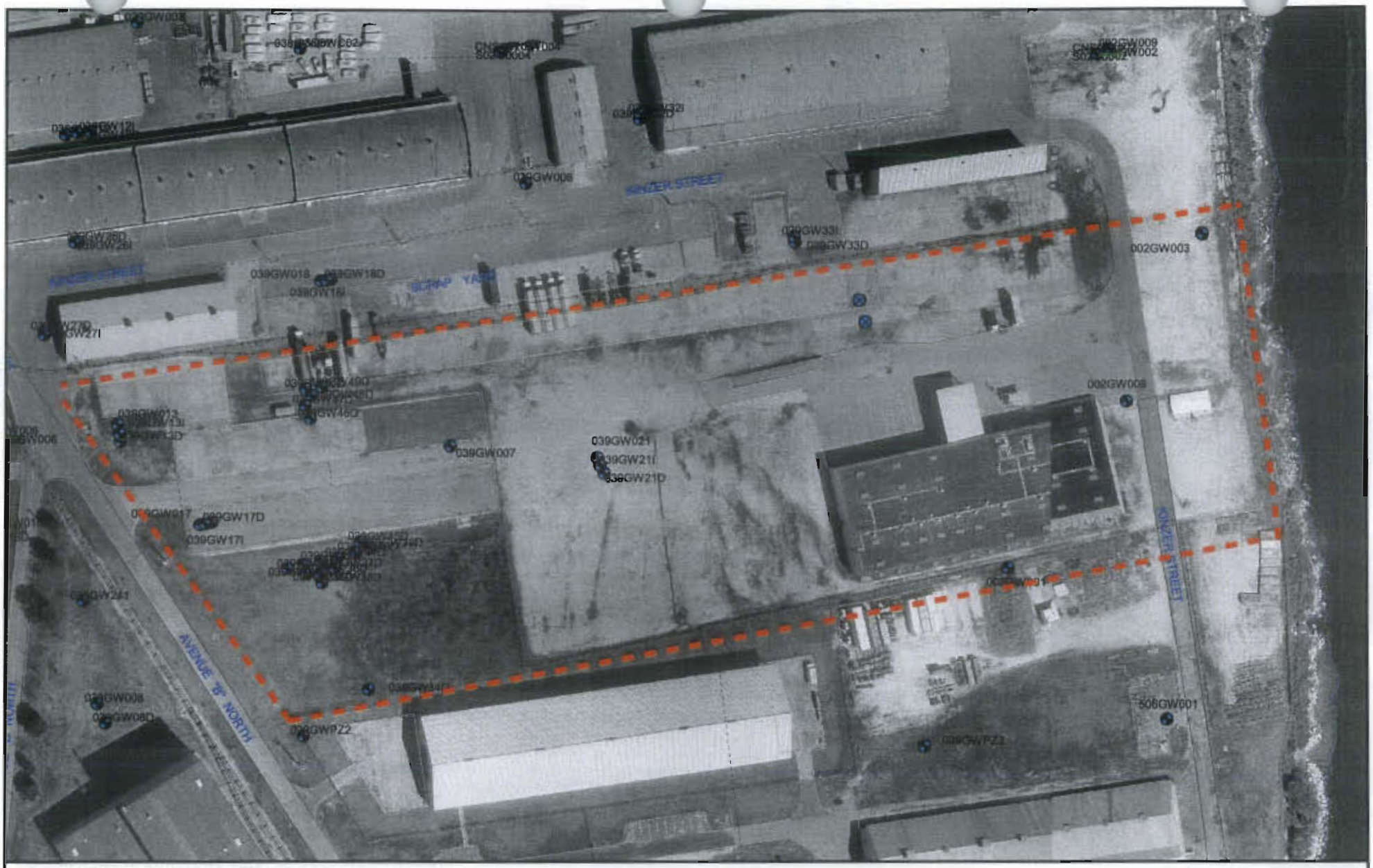

- Abandoned Monitoring Well
- Active Monitoring Well
- Fence
- Proposed Fence
- Shoreline
- Buildings

N

0 100 200 Feet

1 inch = 116 feet

Figure 4-1
Site Map
Dig Permit #189
Charleston Naval Complex

File Path: c:\documents and settings\aoconor\desktop\gis.apr, Date: 20 Mar 2007 14:10, User: AOCONOR, EGIS: Charleston Naval Complex - Figure 1 Site Map

SECTION 5.0

References

5.0 References

CH2M -Jones. *Corrective Measures Report, SWMU 39, Zone A, Revision 0*. Charleston Naval Complex. 2002.

CH2M -Jones. *Corrective Measures Study Addendum and Phase II Interim Measures Work Plan, SWMU 39, Zone A, Revision 0*. Charleston Naval Complex. 2004.

APPENDIX A

Process to Conduct Construction Activities in Areas with LUCs

Process to Conduct Construction Activities in Areas under Land Use Controls at the Charleston Naval Complex

Background

The Department of the Navy (Navy) continues to complete necessary Corrective Actions for past releases of hazardous wastes and/or hazardous constituents at the Charleston Naval Complex (CNC) as required by the Hazardous Waste Permit (SC0 170 022 560) issued to the Navy by the South Carolina Department of Health and Environmental Control (SCDHEC). To facilitate those Corrective Actions and to ensure that human health and the environment are adequately protected both in the interim and long term, certain Land Use Controls (LUCs) were imposed via deed recorded restrictions at the time of property conveyance from the Navy to the Charleston Naval Complex Redevelopment Authority (CNCRDA). Those LUCs may be short term or long term depending on several factors: the physical and chemical properties of the contamination; the concentration of contaminants and the properties of the media where the contamination is located; and subsequent landowner election to remove residual contamination for specific redevelopment objectives. Because these legally imposed restrictions can be violated if not properly observed during construction activities by subsequent landowners or operators, appropriate LUC management procedures must be followed in order to ensure that the integrity of those contaminated site remedies which have been or which may later be completed by the Navy will be maintained.

In addition to deeds, restrictions are also provided in a Restrictive Covenant (RC) as well as Voluntary Cleanup Contracts (VCC) which are in place to ensure that LUCs remain effective.

Construction Activities Criteria

The Navy, in conjunction with the SCDHEC (Bureau of Land and Waste Management) and the U.S. Environmental Protection Agency (EPA), has developed a process for use by subsequent landowners or operators when conducting construction activities in areas where LUCs exist. The process includes submittal of information necessary to evaluate whether construction activities may have an adverse effect on LUCs and remedies in place at the CNC. This information will be provided via a LUC Area Construction Permit to the Navy for authorization to proceed. A copy of the LUC Area Construction Permit form is provided in enclosure (1).

Prior to Construction: Each landowner shall submit information to the Navy a minimum of 90 days prior to beginning any on-site construction activity which will impact a site-remedy based LUC. For smaller projects, a shorter timeframe may be negotiated with the Navy (and SCDHEC) as needed. Provision of information to the Navy does not relieve the landowner from compliance with all applicable federal, state, and local regulations which otherwise apply. In addition, a 60-day written notification requirement applies in those cases where the landowner intends to change the approved land use.

The following information shall be provided by the landowner and will be included with the LUC Area Construction Permit:

1. A description of the intended reuse(s) of the property and new facilities / utilities intended to be constructed.

2. A proposed construction plan, including engineering plans and specifications. This includes construction methods, engineering calculations, and onsite tests that demonstrate knowledge of site conditions, infrastructure, utilities, and site geology.

3. A schedule setting forth the planned timeframe for construction.

4. A site plan with appropriate figures that identifies: the extent of the proposed construction relative to the location of all known SWMUs, AOCs, and associated LUCs on the property; location of groundwater monitoring wells; site topography; current and future underground utilities and any other intended underground infrastructure(s); and the direction of future storm water runoff.

5. A description of the residual contamination known to exist on the property and site remedy related LUCs in place, and any potential effect the proposed construction may have on these existing site conditions and controls. The Navy will provide source information to assist the Landowner, during the Permit application process, to identify residual contamination at the proposed construction areas. The Landowner and/or its construction agents (i.e., A-E consultants, contractors, subcontractors) will, in turn, perform testing of environmental media utilizing this source information as well as other information gathered during construction activities. The Landowner and/or its construction agents are responsible for the quality and adequacy of testing and disposal of environmental media targeted for off-site disposal.

6. An acknowledgment that all General Contractor personnel and the Project Manager for each Subcontractor which may be involved in site excavation activities have (or will prior to the start of any site excavation activities) been provided with a copy of the LUC Construction Area Permit for the project so that they will be aware of known residual contamination on the property, the LUCs in place, and any potential effect the proposed construction may have on these existing site conditions and controls.

7. A description of how hazards will be controlled where construction activities have the potential to interfere with these existing site remedies and imposed LUCs.

8. If applicable, design plans for any desired irrigation or dewatering well(s) and proposed well locations both on the property and relative to the location of each SWMU or AOC situated on the property.

9. A description of what actions will be taken to monitor impacts to the remedy as a result of construction activities. This includes, at a minimum, impacts to groundwater

flow direction, vertical migration of residual contamination and the potential for contaminants to migrate to indoor air.

10. A description of what actions will be taken in the event the human or ecological exposure assumptions used in deriving the LUC(s) component of any interim or final SCDHEC approved site remedy are altered. In accordance with the Navy's RCRA permit, this would constitute a Land Use Change and would require a permit modification request. The Navy will provide to the Landowner and/or its construction agents source information which includes exposure assumptions used in deriving LUCs. These sources will include the "Interim Measures Work Plan (IMWP)" and "Corrective Measures Implementation Plan (CMIP) for Land-Use Control Sites". These sources provide concise summary information about LUC sites, including: site description, site concerns, exposure potential and control (i.e., risk, reuse, exposure, and LUCs), and other references. It is the responsibility of the Landowner and/or its construction agents to review these sources of information and to implement exposure controls which meet all federal, state, and local laws and regulations.

Each landowner must receive authorization to proceed prior to initiating proposed activities. The Navy as RCRA permittee will consult with and obtain approval from SCDHEC in determining the adequacy of the proposed construction with respect to maintaining remedy integrity. The Navy will then provide a written response to the landowner regarding their submittal via the LUC Area Construction Permit. The response may authorize the landowner to proceed with construction activities, request further information, provide terms or conditions regarding construction activities, and in rare instances deny construction activities. Navy authorization to proceed with construction does not constitute approval of methods by which environmental, safety, and other regulations are satisfied.

During Construction: Each landowner shall adhere with all applicable federal, state, and local regulations. Specifically, each landowner shall properly address the following issues during construction:

1. Control of exposure to residual contamination to workers on-site, personnel at adjacent businesses, and nearby residences. For example, control of fugitive dust emissions, personal protective equipment (PPE), and exclusion zones are examples of exposure controls.

2. Reporting any previously unknown contamination to the Navy. All work must stop upon discovery of unknown contamination.

3. Management of excess contaminated soil or groundwater.

4. Provision of information to contractors and subcontractors regarding residual contamination on property, including safety meetings, posting of information at job-site, etc.

After Construction: Upon the completion of an approved construction activity where the potential existed for disturbance of residual contamination at a site or area with LUCs, the landowner shall:

1. Provide a post-completion LUC compliance report or similar report if required by their VCC;

2. Assume responsibility for any additional site monitoring or other responsibilities agreed to as part of the LUC Area Construction Permit process; and

3. Provide SCDHEC and the Navy with continued access to the site for remedy integrity inspection and surveillance purposes.

Voluntary Cleanup Contracts

The use of Voluntary Cleanup Contracts (VCCs) under the state Brownfields Program is recommended in order for subsequent landowners to obtain liability protection from SCDHEC based upon their (and/or day-to-day operators of the property) future actions to ensure the proper maintenance of all imposed LUCs and associated site remedy(ies) integrity. It is recommended that each landowner either assume responsibility under the existing CNCRDA VCC or negotiate a separate VCC with the SCDHEC that provides a Non-Responsible or Responsible Party status based on compliance with the aforementioned conditions and intended future operations on their property.

CHARLESTON NAVAL COMPLEX LUC AREA CONSTRUCTION PERMIT

GENERAL INFORMATION:

Requestor:	Location: (Include Bldg Nos. and Streets)	Date of Request:
Contractor:	Subcontractors:	SWMUs/AOCs Impacted:

PROPOSED WORK:

Scope of Work: (Attach sketches, drawings & information outlined in Process to Conduct Construction Activities Document)

LAND USE CONTROLS:

Current Land Use Controls on Construction Area:

Frequency and Date of Next LUC Inspection for Construction Area:

Potential Effect of Proposed Construction on LUCs:

CERTIFICATIONS:

As a representative of the property owner of the subject property, I hereby certify that: (check all that apply)

☐ 1. I possess an updated copy of the CNC Restricted Areas Map and Interim Measures Work Plan.

☐ 2. I acknowledge that residual contamination exists on the subject property and am aware that further information on site contaminants can be found in the Administrative Record located at Bldg 7, 1330 Truxton Ave, Suite 300.

☐ 3. Information regarding SWMUs/AOCs, and contaminants will be provided to all contractors and subcontractors. Contractor and subcontractor representatives to sign below signifying receipt of information.

Contractor	Name/Signature	Date
Sub-Contractor	Name/Signature	Date

☐ 4. The proposed construction will not change the land use (i.e., from industrial to residential)

☐ 5. Personnel hazards will be controlled where construction activities have the potential to interfere with existing remedies. Exposure controls such as PPE, exclusion zones, etc. will be utilized.

☐ 6. Dewatering will not affect migration of contaminants, and water under groundwater use restriction will be tested and properly disposed.

☐ 7. Excess soil under digging restriction will be tested and properly disposed.

☐ 8. Exposure assumptions used in deriving LUCs will not be altered.

☐ 9. Impacts to the remedy as a result of construction activities will be monitored (I.e., groundwater flow direction, vertical migration of residual contamination, and potential for migration to indoor air.)

☐ 10. Any previously unknown contamination will be reported immediately to the Navy.

Printed Name & Signature of Requesting Official	Property Representing & Phone Number:	Date:

Navy Review:

☐ Requestor *Authorized to Proceed ☐ Further Information is Requested ☐ Permit Denied ☐ Comments attached	Signatures: _____ Navy RPM/BEC _____ CH2M-Hill	Serial No: _____ Date: _____

*Authorization to proceed does not constitute approval of methods by which environmental, safety, and other regulations are satisfied

Annual Land Use Control (LUC) Compliance Certification
Charleston Naval Complex
EPA I.D. No SC0170022560

Property Owner: **CITY OF NORTH CHARLESTON** **Check months completed:**

___ April ___ May ___ June (for semi-annual inspections) **AND** ___ October ___ November ___ December (write in year) _____

Site (SWMU site numbers through 499; AOC site numbers 500 and higher)	Restricted Media: Groundwater	Restricted Media: Soil	Use Restrictions Communicated in Deed	Any LUC Violations Were Reported Within 3 Business Days of Discovery	Explanation of Actions Taken or to be Taken Provided Within 10 Days of Discovery	Groundwater Not Being Used	Monitoring Wells Not Disturbed	Land Not Being Used for Residential Use	Land Not Being Used for Recreational Use	Land Not Being Used for Agricultural Use	Soils Not Disturbed or Disturbed with Authorization via LUC Area Construction Permit	Engineering Controls Maintained	Landfill Cover Not Disturbed or Disturbed with Authorization via LUC Area Construction Permit	Zone	Notes (restrictions) W = groundwater use restriction; U = use restriction; E = engineering controls; D = digging/excavation restriction
			"Y" if Yes; "N" if No; "NA" if not applicable			"Y" if LUC has been maintained. "N" if LUC has not been maintained (explain in Comments section on page 2). Shading indicates particular LUC is not applicable.									
613	•	•												E	W, U, E, D
LUC Area (Zone E)	•	•												E	W, U, E, D Semi-annual
607	•	•												F	W, U, D
3	•													G	W, E, U
163/166/ 197/198	•													K	W, U Semi-annual

Diagonally split cells indicate a requirement for semi-annual inspections: April-June and October-December.

Annual Land Use Control (LUC) Compliance Certification
Charleston Naval Complex
EPA I.D. No SC0170022560

Property Owner: **CITY OF NORTH CHARLESTON** **Check Type of Inspection:** ___ **Drive-through** ___ **Walk-through**

I, the undersigned, hereby certify that I am an authorized representative of **CITY OF NORTH CHARLESTON** and that the above described land use controls have been complied with for the calendar year _____. Any known deficiencies and completed or planned actions to address such deficiencies are described in the attached explanation of deficiencies. I have also attached a map to this certification showing the sites and the LUCs in place at each site.

Signature _____ Relationship to Property Owner _____ Date _____

Printed Name _____ Phone Number (_____) _____

Address _____ City _____ Zip Code _____

Comments: (attach additional sheets as needed)
A map is attached showing the LUCs in place at each site.

Mail original completed certification to SCDHEC (WM), with copies to SC DHEC (SAR), US EPA, and the US Navy at the below addresses:

SCDHEC (Waste Management Division) South Carolina Department of Health and Environmental Control Bureau of Land and Waste Management Attn: Director, Waste Management Division 2600 Bull Street Columbia, SC 29201	**SCDHEC (Site Assessment & Remediation Division)** South Carolina Department of Health and Environmental Control Bureau of Land and Waste Management Attn: Director, Site Assessment & Remediation Division 2600 Bull Street Columbia, SC 29201
US EPA US Environmental Protection Agency Region 4 Federal Facilities Branch Attn: Charleston Naval Complex RPM 61 Forsyth Street SW Atlanta, GA 30303-8909	**US Navy** BRAC Program Management Office Southeast Attn: Charleston Naval Complex RPM 4130 Faber Place Dr Ste 202 North Charleston, SC 29405

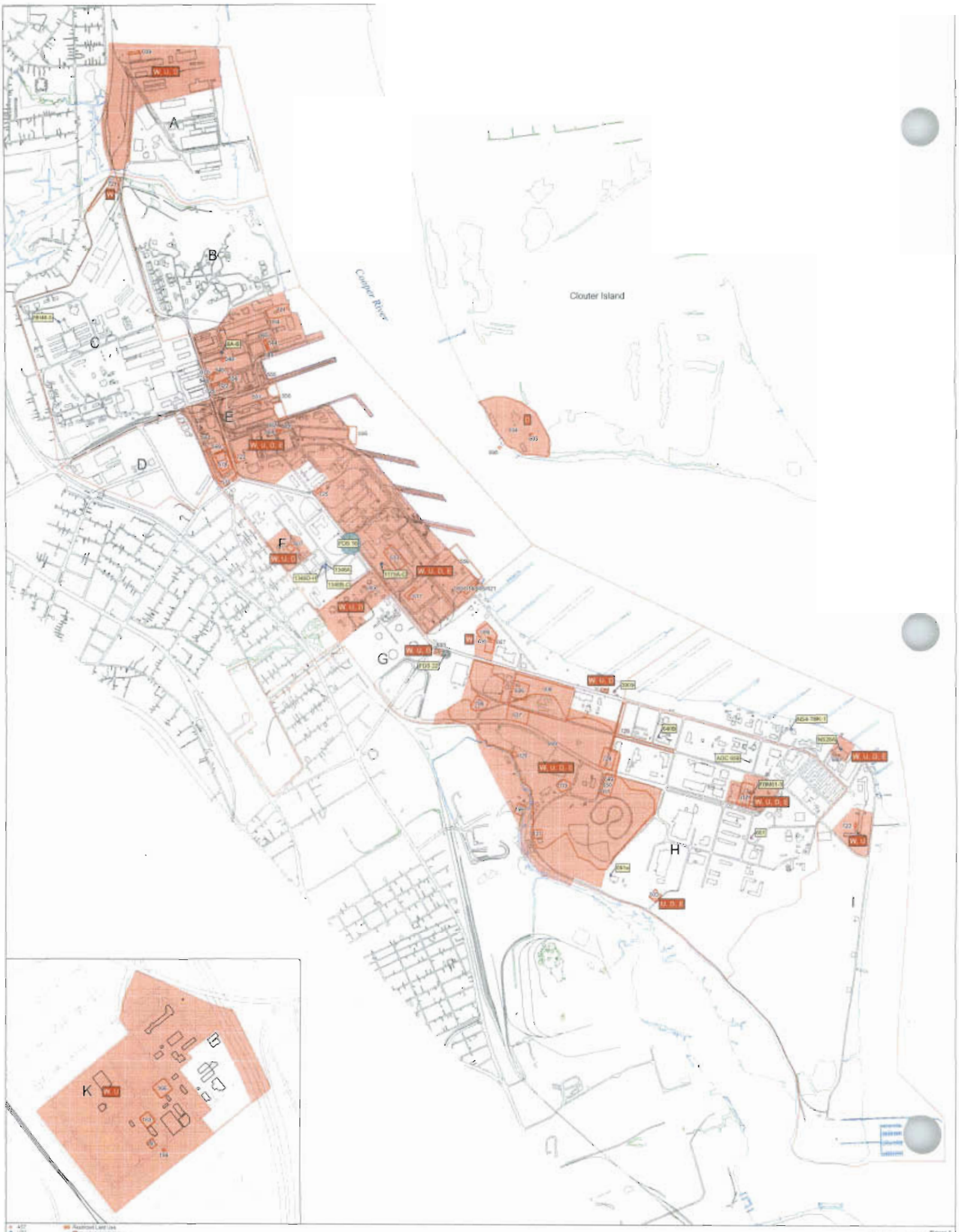
A
B
C
D
E
F
G
H
I
K
Cooper River
Clouter Island

APPENDIX B

Sample Inspection Form

**Note: This process memorandum is not guidance and should not be referenced as such.*

ATTACHMENT 2
CORRECTIVE ACTION CHECKLIST:
CORRECTIVE MEASURES IMPLEMENTATION CHECKLIST

I. SITE INFORMATION	
Site Name (e.g. SWMU name, property boundary, tax identification number, etc.):	Date Of Inspection:
Permit Holder:	EPA ID # for facility in which LUCs are required:
Permit Holder Address:	Weather/Temperature:

Corrective action Includes: (Circle all that apply)

Land Use Controls	Phytoremediation
Landfill cover/containment	Monitored natural attenuation
Groundwater containment	Vertical barrier walls
Groundwater pump and treatment	Surface water collection and treatment

Other: _____

LUC Performance Objectives: (Include all that apply)
(e.g. Prevent access to groundwater until cleanup levels are met, Maintain a vegetative soil layer limiting exposure) _____

Type of inspection (e.g., walk through, drive-by) _____
Frequency _____

Agency, office, or company conducting the inspection: _____

Contact _____
Name Title Phone no.

_____
Signature Date

Attachments: (e.g. Inspection team roster attached, Site map attached, Photographs attached)

II. INTERVIEWS (Check all that apply)

1. Site Manager: _____

Name Title Date

Interviewed: at site at office by phone Phone no.

Present at time of inspection: Yes No

Problems/Suggestions: _____

Reports attached _____

2. Staff: _____

Name Title Date

Interviewed: at site at office by phone Phone no.

Present at time of inspection: Yes No

Problems/Suggestions: _____

Reports attached _____

3. Local Regulatory Authorities/Agencies
(e.g. State and Tribal offices, emergency response office, police department, office of public health or environmental health, zoning office, recorder of deeds, or other city and county offices, etc.)
Fill in all that apply.

Agency _____

Contact _____

Name Title Date Phone no.

Present at time of inspection Yes No

Problems/Suggestions: _____

Reports attached: _____

Agency _____

Contact _____

Name Title Date Phone no.

Problems/Suggestions: _____

Report attached: _____

Agency _____

Contact _____
Name Title Date Phone no.

Present at time of inspection Yes No

Problems/Suggestions: _____

Report attached: _____

Agency _____

Contact _____
Name Title Date Phone no.

Present at time of inspection Yes No

Problems/Suggestions: _____

Report attached: _____

4. Other Interviews (Summary attached): Yes No

III. ON-SITE DOCUMENTS & RECORDS VERIFIED (Check all that apply)

1. O&M Documents

O&M manual	Readily available	Up to date	N/A
As-built drawings	Readily available	Up to date	N/A
Maintenance logs	Readily available	Up to date	N/A

Remarks _____

2. Site-Specific Health and Safety Plan

	Readily available	Up to date	N/A
Contingency plan/emergency response plan	Readily available	Up to date	N/A
Description of required PPE	Yes	No	N/A

Remarks _____

3. Applicable Permits (Readily available)

Hazardous Waste Management
Yes No Permit # _____ Expiration Date _____

Air discharge permit
Yes No Permit # _____ Expiration Date _____

Effluent discharge
Yes No Permit # _____ Expiration Date _____

Waste disposal, POTW
Yes No Permit # _____ Expiration Date _____

Other Permits

	Yes	No	Permit #_____	Expiration Date_____
	Remarks_____			
4.	**Discharge Compliance Records**			
	Air	Readily available	Up to date	N/A
	Water (effluent)	Readily available	Up to date	N/A
	Other Permits	Readily available	Up to date	N/A
	Remarks_____			
5.	**Daily Access/Security Log**	Readily available	Up to date	N/A
	Remarks_____			
	IV. LAND USE CONTROLS (LUCs)	Applicable		N/A
	If deficiencies are noted, the locations should be documented on a site map and with photos			
A.	**Engineering Controls**	Applicable	N/A	
1.	**Fencing**	Yes	No	N/A
		Are they secured?	Yes	No
	Remarks_____			
2.	**Barriers**	Yes	No	N/A
		Are they in place?	Yes	No
	Remarks_____			
3.	**Signs**	Yes	No	N/A
		Are they damaged?	Yes	No
	Remarks_____			

B.	**Prohibitive Directive**	Applicable	N/A
1.	**Signs and other security measures** Yes	No	N/A
	Are they damaged?	Yes	No
	Remarks_____		
2.	**Well Installation** Yes	N/A	
	Were wells installed?	Yes	No
	Remarks_____		
3.	**Digging/Excavation** Yes	N/A	
	Did excavation occur?	Yes	No
	Authorization/Dig Permit #:_____		
	Remarks_____		
4.	**Other** Yes	N/A	
	Remarks_____		

C.	**Institutional Controls**	Applicable	N/A
1.	**Deed And Restrictive Covenant** Yes	N/A	
	Readily Available Yes	No	
	Remarks_____		
2.	**Other** Yes No	N/A	
	Remarks_____		
3.	**Local Land use changes** Yes	No	N/A
	Do the changes in land use potentially affect the corrective action?	Yes	
No			
	Remarks_____		
4.	**Land use changes off site** Yes	No	N/A
	Do the changes in land use potentially affect the corrective action?	Yes	
No			
	Remarks_____		

V. SITE CONDITIONS

If deficiencies are noted, the locations should be documented on a site map and with photos

1. **Provide general description (i.e. roads, buildings, etc.)**

_____

_____

_____

VI. LANDFILL COVERS

Applicable N/A

If deficiencies are noted, the locations should be documented on a site map and with photos

A. Landfill Surface

1. **Settlement** (Low spots) Yes No
   Areal extent_____ Depth_____
   Photograph Attached Yes No
   Corrective measures implemented to rectify settlement Yes No N/A
   Remarks_____

2. **Cracks** Yes No
   Lengths_____ Widths_____ Depths_____
   Photograph Attached Yes No
   Corrective measures implemented to rectify cracking Yes No N/A
   Remarks_____

3. **Erosion** Yes No
   Areal extent_____ Depth_____
   Photograph Attached Yes No
   Corrective measures implemented to rectify erosion Yes No N/A
   Remarks_____

4. **Holes** Yes No
   Areal extent_____ Depth_____
   Photograph Attached Yes No
   Corrective measures implemented to rectify holes Yes No N/A
   Remarks_____

5. **Vegetative Cover**
   Type (grass, trees, etc.)_____
   Cover properly established Yes No
   Has vegetation damaged cover? Yes No
   Photograph Attached Yes No
   Corrective measures implemented to rectify cover Yes No N/A
   Remarks_____

6. **Alternative Cover** (armored rock, etc.) Yes No
   Has cover been damaged? Yes No
   Photograph Attached Yes No

Corrective measures implemented to rectify cover Yes No N/A
Remarks_____

_____

7. Bulges Yes No
Areal extent_____ Height_____
Photograph Attached Yes No
Corrective measures implemented to rectify bulging Yes No N/A
Remarks_____

_____

8. Wet Areas/Water Damage Yes No
Wet areas Areal extent_____
Ponding Areal extent_____
Seeps Areal extent_____
Soft subgrade Areal extent_____
Photograph Attached Yes No
Corrective measures implemented to rectify conditions Yes No N/A
Remarks_____

_____

9. Slope Instability Yes No
Areal extent_____
Photograph Attached Yes No
Corrective measures implemented to rectify instability Yes No N/A
Remarks_____

_____

B. Benches Applicable N/A

(Horizontally constructed mounds of earth placed across a steep landfill side slope to interrupt the slope in order to slow down the velocity of surface runoff and intercept and convey the runoff to a lined channel.)

1. Flows Bypass Bench Yes No
Photograph Attached Yes No
Corrective measures implemented to rectify bench Yes No N/A
Remarks_____

_____

2. Bench Breached Yes No
Photograph Attached Yes No
Corrective measures implemented to rectify bench Yes No N/A
Remarks_____

_____

3. Bench Overtopped Yes No
Photograph Attached Yes No
Corrective measures implemented to rectify bench Yes No N/A
Remarks_____

_____

C. Letdown Channels Applicable N/A

(Channel lined with erosion control mats, riprap, grout bags, or gabions that descend down the steep side slope of the cover and will allow the runoff water collected by the benches to move off of the landfill cover without creating erosion gullies.)

1. Settlement Yes No
Areal extent_____ Depth_____
Photograph Attached Yes No
Corrective measures implemented to rectify settlement Yes No N/A
Remarks_____

2. Material Degradation Yes No
Material type_____ Areal extent_____
Photograph Attached Yes No
Corrective measures implemented to rectify degradation Yes No N/A
Remarks_____

3. Erosion Yes No
Areal extent_____ Depth_____
Photograph Attached Yes No
Corrective measures implemented to rectify erosion Yes No N/A
Remarks_____

4. Undercutting Yes No
Areal extent_____ Depth_____
Photograph Attached Yes No
Corrective measures implemented to rectify undercutting Yes No N/A
Remarks_____

5. Obstructions Yes No
Size_____ Type_____ Areal extent_____
Photograph Attached Yes No
Corrective measures implemented to rectify obstruction Yes No N/A
Remarks_____

6. Excessive Vegetative Growth Yes No
Type_____ Areal extent_____
Photograph Attached Yes No
Corrective measures implemented to rectify excess growth Yes No N/A
Remarks_____

D. Cover Penetrations Applicable N/A

1.	**Gas Vents** (circle all that apply) Active Passive Properly secured/locked Functioning Routinely sampled Good condition Needs Maintenance N /A Evidence of leakage at penetration Yes No N/A Remarks_____
2.	**Gas Monitoring Probes** (circle all that apply) Properly secured/locked Functioning Routinely sampled Good condition Needs Maintenance N /A Evidence of leakage at penetration Yes No N/A Remarks_____
3.	**Monitoring Wells (within surface area of landfill)** (circle all that apply) Properly secured/locked Functioning Routinely sampled Good condition Needs Maintenance N /A Evidence of leakage at penetration Yes No N/A Remarks_____
4.	**Leachate Extraction Wells** (circle all that apply) Properly secured/locked Functioning Routinely sampled Good condition Needs Maintenance N /A Evidence of leakage at penetration Yes No N/A Remarks_____
5.	**Leachate Extraction Records** Readily available Up to date N/A Remarks_____
6.	**Settlement Monuments** Located Routinely surveyed N/A Settle Monument Records_____ Remarks_____
E.	**Gas Collection and Treatment** Applicable N/A
1.	**Gas Treatment Facilities** (circle all that apply) Flaring Thermal destruction Collection for reuse Damaged? Yes No Remarks_____
2.	**Gas Collection Wells, Manifolds and Piping** Damaged? Yes No Remarks_____
3.	**Gas Monitoring Facilities** (e.g., gas monitoring of adjacent homes or buildings) Damaged? Yes No Remarks

	_____			
4.	**Gas Generation Records**	Readily available	Up to date	N/A
	Remarks_____			
	_____			
F.	**Cover Drainage Layer**	Applicable	N/A	
1.	**Outlet Pipes Inspected**	Functioning	N/A	
	Damaged?	Yes	No	
	Remarks_____			
2.	**Outlet Rock Inspected**	Functioning	N/A	
	Damaged?	Yes	No	
	Remarks_____			
	_____			
G.	**Detention/Sedimentation Ponds**	Applicable	N/A	
1.	**Siltation**	Yes	No	
	Areal extent_____	Depth_____		
	Photograph Attached	Yes	No	
	Remarks_____			
	_____			
2.	**Erosion**	Yes	No	
	Areal extent_____	Depth _____		
	Location shown on site map	Yes	No	
	Photograph Attached	Yes	No	
	Remarks_____			
	_____			
3.	**Outlet**	Functioning	N/A	
	Damaged?	Yes	No	
	Remarks_____			
	_____			
H.	**Retaining Walls**	Applicable	N/A	
1.	**Deformations**	Yes	No	
	Horizontal displacement_____	Vertical displacement_____		
	Rotational displacement_____			
	Photograph Attached	Yes	No	
	Remarks_____			
	_____			
2.	**Degradation**	Yes	No	
	Photograph Attached	Yes	No	
	Remarks_____			

I.	**Perimeter Ditches/Off-Site Discharge**		Applicable	N/A
1.	**Siltation**	Yes	No	
	Areal extent_____ Depth_____			
	Photograph Attached	Yes	No	
	Remarks_____			
2.	**Vegetative Growth**	Yes	No	
	Does vegetation impede flow?	Yes	No	
	Areal extent_____ Type_____			
	Photograph Attached	Yes	No	
	Remarks_____			
3.	**Erosion**	Yes No		
	Areal extent_____ Depth_____			
	Photograph Attached	Yes	No	
	Remarks_____			
4.	**Discharge Structure**	Yes	No	
	Damaged?	Yes	No	
	Remarks_____			

VII. VERTICAL BARRIER WALLS Applicable N/A

If deficiencies are noted, the locations should be documented on a site map and with photos

1.	**Settlement**	Yes	No	
	Areal extent_____ Depth_____			
	Photograph Attached	Yes	No	
	Remarks_____			
2.	**Performance Monitoring**			
	Type of monitoring_____	Yes	No	
	Frequency_____			
	Evidence of breaching	Yes	No	
	Head differential_____			
	Remarks_____			

VIII. GROUNDWATER/SURFACE WATER REMEDIES Applicable N/A

If deficiencies are noted, the locations should be documented on a site map and with photos

A.	**Groundwater Wells, Pumps, and Pipelines**	Applicable	N/A

1.	**Pumps, Well head Plumbing, and Electrical**		
	Damaged?	Yes	No
	Maintenance Needed?	Yes	No
	Remarks_____		
2.	**Extraction System Pipelines, Valves, Valve Boxes, and Other Appurtenances**		
	Damaged?	Yes	No
	Remarks_____		
3.	**Monitoring Wells**		
	Properly secured/locked	Yes	No
	Damaged?	Yes	No
	Maintenance Needed?	Yes	No
	All required wells located	Yes	No
	Routinely Sampled?	Yes	No
	Abandoned well(s)	Yes	No
	List abandoned well(s)_____		
	Remarks_____		
B.	**Surface Water Collection Structures, Pumps, and Pipelines**	Applicable	N/A
1.	**Collection Structures, Pumps, and Electrical**		
	Damaged?	Yes	No
	Remarks_____		
2.	**Surface Water Collection System Pipelines, Valves, Valve Boxes, and Other Appurtenances**		
	Damaged?	Yes	No
	Remarks_____		
C.	**Treatment System**	Applicable	N/A
1.	**Treatment Train (Check components that apply)**		
	Metals removal	Oil/water separation	Bioremediation
	Air stripping	Carbon absorbers	Phytoremediation
	Monitored Natural Attenuation		
	Others_____		
	a. **Filters**_____		
	b. **Additive** (e.g., chelation agent, flocculent)_____		
	c. **Others**_____		
2.	**Sampling ports properly marked and functional**	Yes	No N/A
	Remarks_____		

3.	**Sampling/maintenance log displayed and up to date** Yes	No		N/A
	Remarks_____			
4.	**Equipment properly identified** Yes	No	N/A	
	Remarks_____			
5.	**Quantity of groundwater treated annually**_____			
	Remarks_____			
6.	**Quantity of surface water treated annually**_____			
	Remarks_____			
7.	**Electrical Enclosures and Panels (properly rated and functional)**			
	Damaged? Yes	No		
	Remarks_____			
8.	**Tanks, Vaults, Storage Vessels** (circle all that apply)			
	Good condition Proper secondary containment	Needs Maintenance	N/A	
	Remarks_____			
9.	**Discharge Structure and Appurtenances**			
	Damaged Yes	No		
	Remarks_____			
10.	**Treatment Building(s)**			
	Good condition (esp. roof and doorways)	Needs repair		N/A
	Chemicals and equipment properly stored	Yes	No	N/A
	Remarks_____			
D.	**Groundwater Monitoring**	Applicable		N/A
1.	**Monitoring Data**			
	Is routinely submitted on time	Readily available	Up to date	N/A
	Is of acceptable quality	Readily available	Up to date	N/A
	Remarks_____			
2.	**Groundwater Monitoring Records**	Readily available	Up to date	N/A
	Remarks_____			
3.	**Monitoring data suggests:**			
	Groundwater plume is effectively contained	Yes	No	N/A
	Contaminant concentrations	Increasing	Decreasing	N/A
	Plume has moved offsite	Yes	No	N/A
	Remarks_____			

IX. OTHER REMEDIES

If deficiencies are noted, the locations should be documented on a site map and with photos

If there are remedies applied at the sites, which are not covered above, attach an inspection sheet describing the physical nature and condition of any facility associated with the corrective action. An example would be soil vapor extraction.

Remarks _____

X. OVERALL SITE OBSERVATIONS

A. Implementation of the Corrective action

Describe issues and observations relating to whether the corrective action is effective and functioning as designed. Begin with a brief statement of what the corrective action is to accomplish (e.g., to contain plume, minimize infiltration and gas emissions)

_____

B. Adequacy of O&M

Do you think the corrective action is effective Yes No

Remarks _____

C. Evaluation of Land Use Controls (LUCs) Applicable N/A

1. Implementation and Enforcement

Site conditions imply LUCs not properly implemented	Yes	No	N/A
Site conditions imply LUCs not being fully enforced	Yes	No	N/A

Remarks _____

D. Reporting

Reporting is up-to-date	Yes	No	N/A
Has there been a property conveyance since last inspection?	Yes	No	
If yes, attach copy of property conveyance documents			
Reports are verified by the lead agency	Yes	No	N/A
Specific requirements in deed or decision documents met	Yes	No	N/A
Violations have been reported	Yes	No	N/A

Other problems or suggestions:_____

Report attached:_____

E. Early Indicators of Potential Corrective action Problems

Describe issues and observations such as unexpected changes in the cost or scope of O&M or a high frequency of unexpected repairs, which suggest that the protectiveness of the corrective action may be compromised in the future.

_____

_____

_____

_____

_____

F. Opportunities for Optimization

Describe possible opportunities for optimization in monitoring tasks or the operation of the corrective action.

_____

_____

_____

_____

_____

_____

_____

_____

_____

_____

XI. CONTACT INFORMATION

A. Inspector

Name (print)_____

Signature _____

Date _____

B. Responsible Party

Name (print)_____

Signature _____

Date _____

APPENDIX C

UIC Permitting Information

BOARD:
Elizabeth M. Hagood
Chairman

Mark B. Kent
Vice Chairman

F L. Brilliant, MD
S y

D H E C

PROMOTE PROTECT PROSPER

C. Earl Hunter, Commissioner

Promoting and protecting the health of the public and the environment.

BOARD:
Carl L. Brazell

Louisiana W. Wright

L. Michael Blackmon

Coleman F. Buckhouse, MD

November 17, 2004

(BOW-GWMGMT)
Mr. Rob Harrell
BRAC Environmental Coordinator
Southern Division, NAVFACENGCOM
PO Box 190010
2155 Eagle Drive
North Charleston, SC 29419-9010

Re: Underground Injection Control Permit #538M
Charleston Naval Complex, SWMU 39, Zone A Site
Charleston County

Dear Mr. Harrell:

Enclosed is a Permit to Construct for ten (10) Class VA-I injection wells at the Charleston Naval Complex, SWMU 39, Zone A Site as requested in the UIC application received November 1, 2004.

Affected parties may appeal this permit decision in accordance with State Regulation R.61-72. To contest a case, a request for a hearing must be made to the Clerk of the DHEC Board within 30 days of the date of this letter. All requests must include the following information:

1) name of the party requesting the hearing,
2) issue(s) for which the hearing is requested,
3) caption or other information sufficient to identify the decision, order, action or inaction which is the subject of the hearing,
4) relief requested.

Note further that Administrative Law Court (ALC) Division rules require that persons requesting a contested case hearing must file a copy of the request and pay a filing fee in the amount of $250 dollars (US) with the ALC Division at the following address:

Clerk, ALC Division
1205 Pendleton Street, Suite 224
P.O. Box 11667
Columbia, SC 29211

An inspection of the UIC System must be conducted prior to issuance of Approval to Operate. After completion of the inspection, Approval to Operate #538M will be issued. If you have any question, please call Todd Adams at (803) 898-3549.

Sincerely,

Rob Devlin, Manager
GroundWater Management Section
Bureau of Water

cc: Mihir Mehta, BLWM
Casey Hudson, CH2M Hill
115 Perimeter Center Place NE, Suite 700, Atlanta, GA 30346-1278

BOARD:
Elizabeth M. Hagood
Chairman

Mark B. Kent
Vice Chairman

Howard L. Brilliant, MD
Secretary

D H E C

PROMOTE PROTECT PROSPER

C. Earl Hunter, Commissioner

Promoting and protecting the health of the public and the environment.

BOARD:
Carl L. Brazell

Louisiana W. Wright

L. Michael Blackmon

Coleman F. Buckhouse, M

WATER MONITORING ASSESSMENT & PROTECTION DIVISION

Injection Well Construction Permit
for
Class II, III, and V.A. Injection Well(s)

Permit #538M

Date Issued: November 17, 2004
Date Expired: November 17, 2005

For (Operator): CH2M Hill

In accordance with provisions of Title 48, Chapter 1, South Carolina Code of Laws, 1976, as amended, permission is granted for construction of ten (10) Class V.A.-I injection wells with a true diameter of 2.0 inches, and a total depth of approximately 35-50 feet located at the Charleston Naval Complex, SWMU 39, Zone A site, Charleston County, SC with the following provisions:

1) The operator shall submit completed SCDHEC well record forms to the Departments Water Monitoring, Assessment & Protection Division after completion of the injection wells.

2) Upon completion of construction, injection activities shall not commence prior to receiving approval from the Department to operate the injection wells.

3) Injection wells must be constructed in accordance with the South Carolina Well Standards and Regulations (R.61-71).

4) When the injection wells are no longer in use, or upon request by the Department, within sixty (60) days all injection wells must be permanently abandoned in accordance with the South Carolina Well Standards and Regulations (R.61-71).

Rob Devlin, Manager
GroundWater Management Section
Bureau of Water

November 17, 2004
Date

DHEC 2104 (6/88)

STATEMENT OF BASIS - UIC DRAFT PERMIT #538M

In accordance with the South Carolina Underground Injection Control Regulations, Section R61-87.12,J., this Statement of Basis has been prepared for the Charleston Naval Complex, SWMU 39, Zone A Site Underground Injection Control permit application received November 1, 2004.

Ownership of the proposed injection wells is BRAC Environmental Coordinator, Southern Division, AVFACENGCOM, PO Box 190010, 2155 Eagle Drive, North Charleston, SC 29419-9010. The permit (UIC #538M) is for the construction of ten (10) injection wells for a corrective action system at the Charleston Naval Complex, SWMU 39, Zone A site. The intent of the injection wells is to facilitate enhanced remediation by injection of potassium lactate and emulsified edible oil as described in the Corrective Action Plan into the subsurface. The draft permit for the underground injection proposal has been prepared based on staff review and the application of the Pollution Control Act of South Carolina and the Underground Injection Control Regulations of South Carolina.

Conditions of the permit issuance include the submittal of well records for all injection wells installed and the inspection of well construction by the Department prior to injection.

BOARD:
Elizabeth M. Hagood
Chairman

Edwin H. Cooper, III
Vice Chairman

Steven G. Kisner
Secretary

D H E C

PROMOTE PROTECT PROSPER

C. Earl Hunter, Commissioner

Promoting and protecting the health of the public and the environment.

BOARD:
Henry C. Scott

Paul C. Aughtry, III

Glenn A. McCall

Coleman F. Buckho

November 16, 2005

Ms. Kathy Stewart
United States Navy NAVFAC Southern Division
Naval Facilities Engineering Command
P.O. Box 190010
Charleston, SC 190010

Re: Underground Injection Control Permit #538M1
Charleston Naval Complex, SWMU 39, Zone A
Charleston County

Dear Ms Stewart:

Enclosed is a Permit to Construct for ten (10) Class VA-B injection wells at the Charleston Naval Complex, SWMU 39, Zone A Site, Charleston County as requested in the permit application received November 7, 2005.

Notice of Appeal Procedure

This decision may be appealed to the Administrative Law Court (ALC) by complying with the following requirements of the ALC:

1. File a request for a contested case hearing with the Clerk of the Administrative Law Court at the following address within 30 days after notice of this decision:

   Clerk's Office
   South Carolina Administrative Law Court
   1205 Pendleton Street, Suite 224
   Columbia, SC 29211-1667
   803-734-0550

   The ALC has a Notice of Request for Contested Case Hearing form that may be used, but is not required. The form and the Rules of the ALC can be found at the ALC's website: http://www.scalc.net.

   A request for a contested case hearing must contain the following information pursuant to ALC Rule 11:

   1. The name of the party requesting the hearing and the issue(s) for which the hearing is requested;
   2. The caption or other information sufficient to identify the decision, order, letter, determination, action, or inaction which is subject to the hearing;
   3. A copy of the written agency decision, order, letter or determination, if any, which gave rise to the request;
   4. The relief requested.

2. Submit a filing fee to the Administrative Law Court in the amount of $250. ALC Rule 71 requires the filing fee.

3. Serve a copy of the request for a contested case hearing on DHEC and any other parties at the same time the request is filed with the ALC. A copy of the request for a contested case hearing must be delivered or mailed to DHEC at the following address:

Clerk of the Board
SC DHEC
2600 Bull Street
Columbia, SC 29201

The above information is provided as a courtesy; parties before the Administrative Law Court are responsible for complying with all applicable requirements of the Court.

An inspection of the UIC System must be conducted prior to issuance of Approval to Operate. If you have any question, please call Norman J. Dodson at (803) 898-3531.

Sincerely,

Norman J. Dodson, Hydrogeologist
Ground Water Management Section
Bureau of Water

cc: Don Hargrove, BLWM
Casey Hudson, CH2MHill, 115 perimeter Center Place NE, Suite 700, Atlanta, GA 30346

BOARD:
Elizabeth M. Hagood
Chairman

Edwin H. Cooper, III
Vice Chairman

Steven G. Kisner
Secretary

D H E C

PROMOTE PROTECT PROSPER

C. Earl Hunter, Commissioner

Promoting and protecting the health of the public and the environment.

BOARD:
Henry C. Scott

Paul C. Aughtry, III

Glenn A. McCall

Coleman F. Buckhc D

WATER MONITORING ASSESSMENT & PROTECTION DIVISION

Injection Well Construction Permit
for
Class II, III, and V.A. Injection Well(s)

Permit #538M1

Date Issued: November 16, 2005
Date Expired: November 16, 2010

For (Operator): Charleston Naval Complex, SWMU 39, Zone A

In accordance with provisions of Title 48, Chapter 1, South Carolina Code of Laws, 1976, as amended, permission is granted for construction of ten (10) Class VA-B injection wells with a true diameter of two (2) inches, and a total depth of approximately twenty-eight (28) feet located at Charleston Naval Complex, SWMU 39, Zone A, Charleston County, SC with the following provisions:

1) The operator shall submit completed SCDHEC well record forms to the Departments Water Monitoring, Assessment & Protection Division after completion of the injection wells.

2) Upon completion of construction, injection activities shall not commence prior to receiving approval from the Department to operate the injection wells.

3) When the injection wells are no longer in use, or upon request by the Department, within sixty (60) days all injection wells must be permanently abandoned in accordance with the South Carolina Well Standards and Regulations (R.61-71).

Rob Devlin, Manager
GroundWater Management Section
Bureau of Water

STATEMENT OF BASIS - UIC DRAFT PERMIT #538M1

In accordance with the South Carolina Underground Injection Control Regulations, Section R61-87.12,J., this Statement of Basis has been prepared for the Charleston Naval Complex, SWMU 39, Zone A Site Underground Injection Control permit application received November 7, 2005.

Ownership of the proposed injection wells is United States Navy NAVFAC Southern Division, P.O. Box 190010, Charleston, SC 190010. The permit (UIC 538M1) is for the construction of ten (10) injection wells for a corrective action system at the Charleston Naval Complex, SWMU 39, Zone A Site. The intent of the injection wells is to inject immulsified soybean oil mixed with lactate and trace nutrients into the aquifer to treat dissolved concentrations of chloronated volatile organic compounds as described in the cleanup plan dated Novemner 4, 2005. The final permit for the underground injection proposal has been prepared based on staff review and the application of the Pollution Control Act of South Carolina and the Underground Injection Control Regulations of South Carolina.

Conditions of the permit issuance include the submittal of well records for all injection wells installed and the inspection of well construction by the Department prior to injection.

BOARD:
Elizabeth M. Hagood
Chairman

Edwin H. Cooper, III
Vice Chairman

L. Michael Blackmon
Secretary

D H E C

PROMOTE PROTECT PROSPER

C. Earl Hunter, Commissioner

Promoting and protecting the health of the public and the environment.

BOARD:
Carl L. Brazell

Steven G. Kisner

Paul C. Aughtry, III

Coleman F. Buckhanan, MD

January 30, 2006

(BOW-GWMGMT-NJD)
Ms. Kathy Stewart
United Sates Navy NAVFAC Southern Division
P.O. Box 190010
North Charleston, SC 29419

Re: Underground Injection Control Permit #538M1
CNC, SWMU 39, Zone A Site
Charleston County

Dear Ms. Stewart:

Enclosed is a Permit to Operate ten (10) Class VA-G (Aquifer Remediation) injection wells at the CNC, SWMU 39, Zone A Site, Charleston County, SC.

The issuance of this **UIC Permit 538M1** represents a final staff decision that may be appealed to the Administrative Law Court (ALC). Such appeal must be made pursuant to the amended Rules of Procedure for the Administrative Law Court that became effective on May 1, 2005. Pursuant to Rule 11 of the amended ALC Rules of Procedure, such appeal must be made by filing a request for a contested case hearing with the Clerk of the ALC within thirty (30) days after notice of this decision at the following address:

Clerk, Administrative Law Court
1205 Pendleton Street, Suite 224
P. O. Box 11667
Columbia, SC 29211

Pursuant to Rule 11(D), the following elements must, at a minimum, be included within the request:

1. The name of the party requesting the hearing and the issue(s) for which the hearing is requested;
2. The caption or other information sufficient to identify the decision, order, letter, determination, action, or inaction which is subject to the hearing;
3. A copy of the written agency decision, order, letter or determination, if any, which gave rise to the request;
4. The relief requested.

Furthermore, pursuant to ALC Rule 71, the Administrative Law Court requires that a party requesting a contested case hearing must submit a filing fee in the amount of $250 with the Administrative Law Court.

Finally, a copy of a request for the contested case hearing must also be served on each party, including but not limited to DHEC. Copies of a request for a contested case hearing should be mailed to the Clerk of the Board, DHEC, 2600 Bull Street, Columbia, SC 29201, (803) 898-3300.

If you have any question, please call Norman J. Dodson at (803) 898-3531.

Sincerely,

Norman J. Dodson, Hydrogeologist
Groundwater Management Section
Bureau of Water

cc: Casey Hudson, CH2MHill, 115 Perimeter Center Place NE, Suite 700, Atlanta, GA 30346
Don Hargrove, BLWM

BOARD:
Elizabeth M. Hagood
Chairman

Edwin H. Cooper, III
Vice Chairman

[illegible]ael Blackmon
[illegible]y

D H E C

PROMOTE PROTECT PROSPER

C. Earl Hunter, Commissioner

Promoting and protecting the health of the public and the environment.

BOARD:
Carl L. Brazell

Steven G. Kisner

Paul C. Aughtry, III

Coleman F. Buckhouse, MD

WATER MONITORING ASSESSMENT & PROTECTION DIVISION

Injection Well Operating Approval
for

Class II, III, and V.A. Injection Well(s)

Permit #538M1 Date of Issue: January 30, 2006

In accordance with the provisions of Title 48, Chapter 1, South Carolina Code of Laws, 1976, as amended, and pursuant to receiving a Permit to Operate ten (10) Class VA-G (Aquifer Remediation) injection wells, authorization is granted to United Sates Navy NAVFAC Southern Division to operate ten (10) Class VA-G (Aquifer Remediation) injection wells located at the CNC, SWMU 39, Zone A Site, Charleston County, SC, and are subject to the attached provisos noted for the operator.

The Class VA-G injection wells are two (2) inches in diameter and approximately twenty-eight (28) feet deep

Pursuant to Title 48, Chapter 1, South Carolina Code of Laws, 1976, as amended, this authorization may be rescinded if these injection wells should, at any time, contaminate, pollute, or otherwise adversely affect other water in the vicinity or for any other conditions contained in R61-87, Title 48, Chapter 1, South Carolina Code of Laws, 1976, as amended.

Expires: January 30, 2009

Date January 30, 2006

Rob Devlin, Manager
Groundwater Management Section
Bureau of Water

Provisions to the Injection Well Operating Approval
for
Underground Injection Well Permit #538M1
CNC, SWMU 39, Zone A
Charleston County, S.C.
January 30, 2006

1) Construction of new or abandonment of existing wells must be reported to the Department within thirty (30) days of completion.

2) Only emulsified soybean oil, lactate, and trace nutrients as described in the corrective action plan may be injected into the subsurface at the ten (10) Class VA-G (Aquifer Remediation) injection wells. Any changes in the system operation other than as presented in the UIC Permit Application must be reported to the Department prior to implementation.

APPENDIX D

Well Construction Diagrams, Purge Logs, and Forms #1903

PROJECT NUMBER	WELL NUMBER	
258814	A039GW51I	SHEET 1 OF 1

CH2MHILL

WELL COMPLETION DIAGRAM

PROJECT : Charleston Naval Complex LOCATION : SWMU 39 Northing: 381070.9
DRILLING CONTRACTOR : Prosonic Drilling Corp. Easting: 2315029.9
DRILLING METHOD AND EQUIPMENT USED : Rotosonic, Truck-Mounted Rotosonic Rig
WATER LEVELS : 3.51 START : 11-Jan-06 / 0930 END : 11-Jan-06 / 0945 LOGGER : Darryl Gates

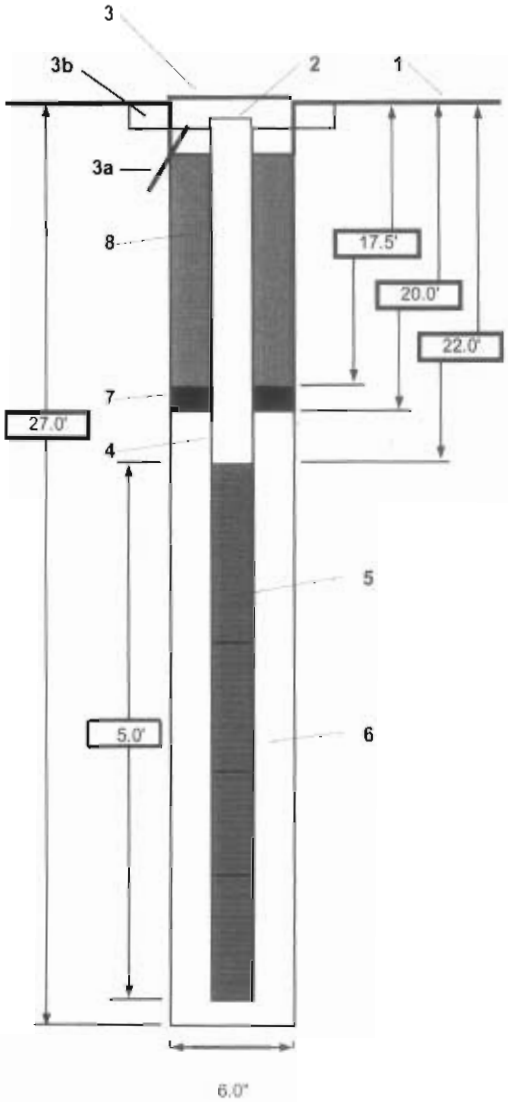

1- Ground elevation at well	Not obtained
2- Top of casing elevation	6.16
3- Wellhead protection cover type	Bolt-down manhole cover
a) drain tube?	No
b) concrete pad dimensions	2' X 2' X 6"
4- Dia./type of well casing	2-inch / PVC
5- Type/slot size of screen	PVC / .010-circumslot
6- Type screen filter	20/30 silica sand
a) Quantity used	3 (50 lb) bags
7- Type of seal	Barroid bentonite chips
a) Quantity used	0.5 (50 lb) bag
8- Grout	
a) Grout mix used	Type I Portland cement w/ 5% bentonite
b) Method of placement	Trimmie
Development method	Surge block / Submersible pump
Development time	46 minutes
Estimated purge volume	34 gallons

Comments Grout weight = >14lb/gallon
Total Depth (BTOC) = +/- 2.5 inches
Final field parameters collected during well development
pH = 6.83
conductivity = 0.812
temperature = 20.49
turbidity = 5

PROJECT NUMBER	WELL NUMBER	
258814	A039GW52I	SHEET 1 OF 1

CH2MHILL

WELL COMPLETION DIAGRAM

PROJECT : Charleston Naval Complex LOCATION : SWMU 39 Northing: 381085.5
DRILLING CONTRACTOR : Prosonic Drilling Corp. Easting: 2315031.6
DRILLING METHOD AND EQUIPMENT USED : Rotosonic, Truck-Mounted Rotosonic Rig
WATER LEVELS : 3.30 START : 11-Jan-06 / 0955 END : 11-Jan-06 / 1040 LOGGER : Darryl Gates

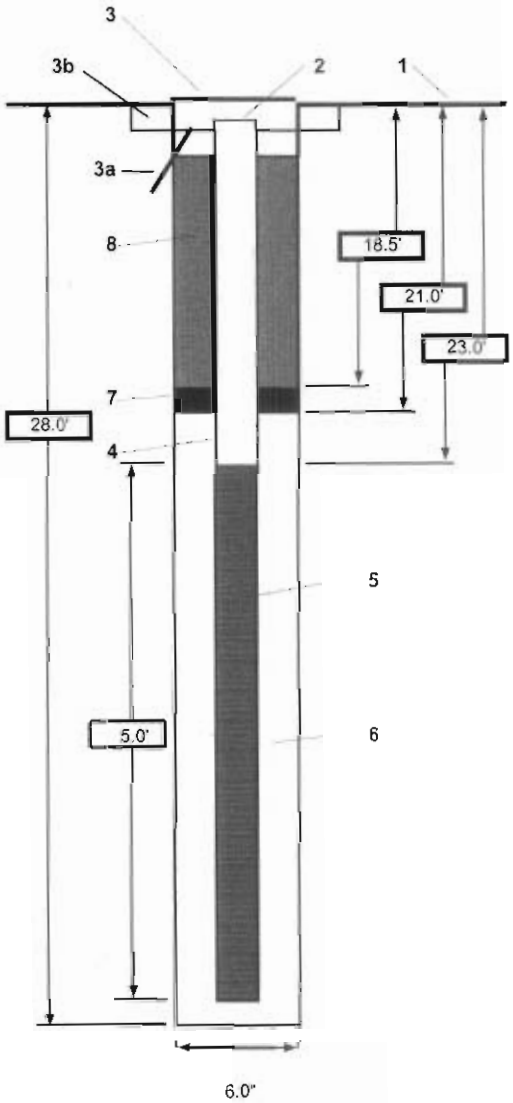

1- Ground elevation at well	Not obtained
2- Top of casing elevation	6.17
3- Wellhead protection cover type	Bolt-down manhole cover.
a) drain tube?	No
b) concrete pad dimensions	2' X 2' X 6"
4- Dia./type of well casing	2-inch / PVC
5- Type/slot size of screen	PVC / .010-circumslot
6- Type screen filter	20/30 silica sand
a) Quantity used	3 (50 lb) bags
7- Type of seal	Barroid bentonite chips
a) Quantity used	0.5 (50 lb) bag
8- Grout	
a) Grout mix used	Type I Portland cement w/ 5% bentonite
b) Method of placement	Trimmie
Development method	Surge block / Submersible pump
Development time	60 minutes
Estimated purge volume	28 gallons

Comments Grout weight = >14lb/gallon
Total Depth (BTOC) = +/- 2.5 inches
Final field parameters collected during well development
pH = 6.5
conductivity = 1.0
temperature = 20.54
turbidity = 0

PROJECT NUMBER	WELL NUMBER	
258814	A039GW53I	SHEET 1 OF 1

CH2MHILL

WELL COMPLETION DIAGRAM

PROJECT : Charleston Naval Complex LOCATION : SWMU 39 Northing: 381110.9
DRILLING CONTRACTOR : Prosonic Drilling Corp. Easting: 2315034.8
DRILLING METHOD AND EQUIPMENT USED : Rotosonic, Truck-Mounted Rotosonic Rig
WATER LEVELS : 3.39 START : 11-Jan-06 / 1050 END : 11-Jan-06 / 1120 LOGGER : Darryl Gates

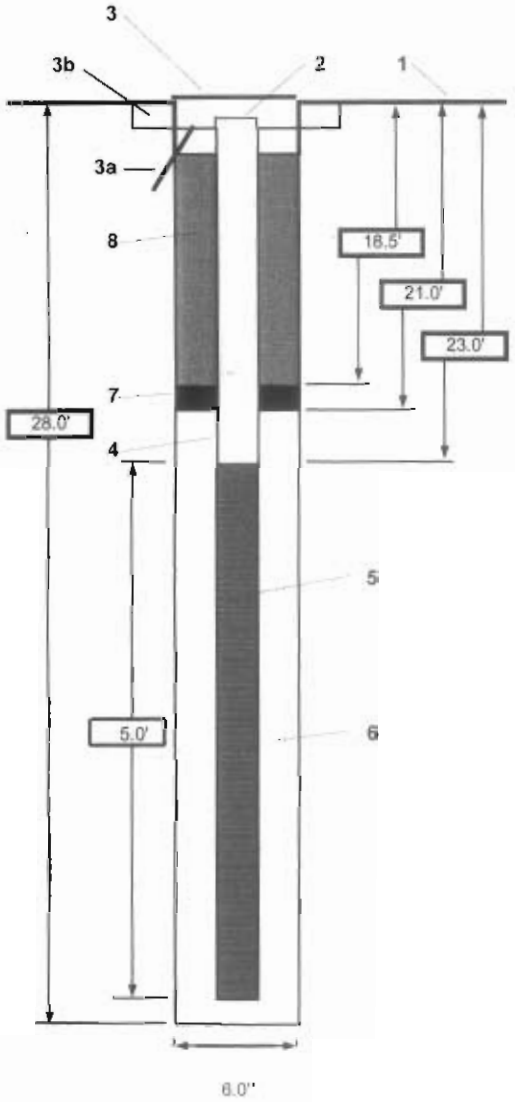

1- Ground elevation at well	Not obtained
2- Top of casing elevation	6.29
3- Wellhead protection cover type	Bolt-down manhole cover.
a) drain tube?	No
b) concrete pad dimensions	2' X 2' X 6"
4- Dia./type of well casing	2-inch / PVC
5- Type/slot size of screen	PVC / .010-circumslot
6- Type screen filter	20/30 silica sand
a) Quantity used	3 (50 lb) bags
7- Type of seal	Barroid bentonite chips
a) Quantity used	0.5 (50 lb) bag
8- Grout	
a) Grout mix used	Type I Portland cement w/ 5% bentonite
b) Method of placement	Trimmie
Development method	Surge block / Submersible pump
Development time	29 minutes
Estimated purge volume	23 gallons

Comments Grout weight = >14lb/gallon
Total Depth (BTOC) = +/- 2.5 inches
Final field parameters collected during well development
pH = 6.34
conductivity = 0.43
temperature = 20.61
turbidity = 8.1

CH2MHILL

PROJECT NUMBER	WELL NUMBER		
258814	A039GW54I	SHEET 1	OF 1

WELL COMPLETION DIAGRAM

PROJECT : Charleston Naval Complex
LOCATION : SWMU 39
Northing: 381131.8
Easting: 2315037.9
DRILLING CONTRACTOR : Prosonic Drilling Corp.
DRILLING METHOD AND EQUIPMENT USED : Rotosonic, Truck-Mounted Rotosonic Rig
WATER LEVELS : 3.85
START : 11-Jan-06 / 1245
END : 11-Jan-06 / 1310
LOGGER : Darryl Gates

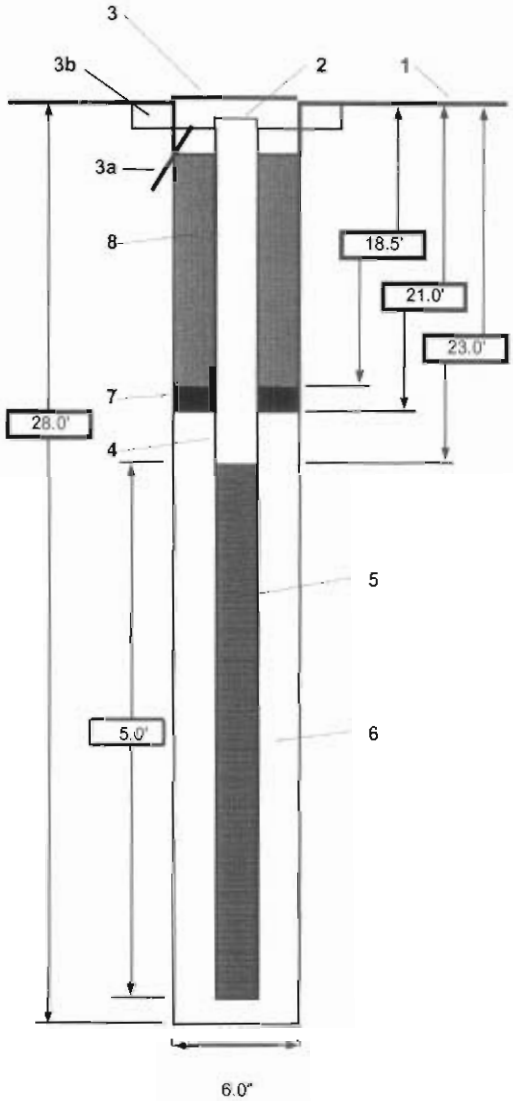

1- Ground elevation at well	Not obtained
2- Top of casing elevation	6.25
3- Wellhead protection cover type	Bolt-down manhole cover.
a) drain tube?	No
b) concrete pad dimensions	2' X 2' X 6"
4- Dia./type of well casing	2-inch / PVC
5- Type/slot size of screen	PVC / .010-circumslot
6- Type screen filter	20/30 silica sand
a) Quantity used	3 (50 lb) bags
7- Type of seal	Barroid bentonite chips
a) Quantity used	0.5 (50 lb) bag
8- Grout	
a) Grout mix used	Type I Portland cement w/ 5% bentonite
b) Method of placement	Trimmie
Development method	Surge block / Submersible pump
Development time	62 minutes
Estimated purge volume	35 gallons

Comments Grout weight = >14lb/gallon
Total Depth (BTOC) = +/- 2.5 inches
Final field parameters collected during well development
pH = 6.51
conductivity = 0.482
temperature = 20.46
turbidity = 5.0

PROJECT NUMBER	WELL NUMBER		
258814	A039GW55I	SHEET 1	OF 1

CH2MHILL

WELL COMPLETION DIAGRAM

PROJECT : Charleston Naval Complex — LOCATION : SWMU 39 — Northing: 381154.9
DRILLING CONTRACTOR : Prosonic Drilling Corp. — Easting: 2315043.0
DRILLING METHOD AND EQUIPMENT USED : Rotosonic, Truck-Mounted Rotosonic Rig
WATER LEVELS : 5.01 — START : 11-Jan-06 / 1330 — END : 11-Jan-06 / 1420 — LOGGER : Darryl Gates

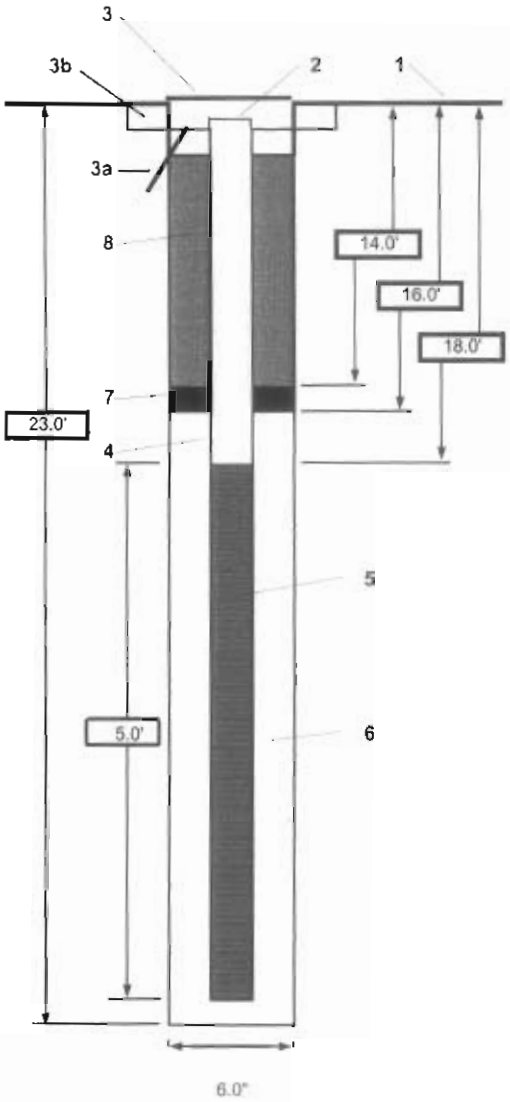

1- Ground elevation at well	Not obtained
2- Top of casing elevation	6.82
3- Wellhead protection cover type	Bolt-down manhole cover.
a) drain tube?	No
b) concrete pad dimensions	2' X 2' X 6"
4- Dia./type of well casing	2-inch / PVC
5- Type/slot size of screen	PVC / .010-circumslot
6- Type screen filter	20/30 silica sand
a) Quantity used	3 (50 lb) bags
7- Type of seal	Barroid bentonite chips
a) Quantity used	0.5 (50 lb) bag
8- Grout	
a) Grout mix used	Type I Portland cement w/ 5% bentonite
b) Method of placement	Trimmie
Development method	Surge block / Submersible pump
Development time	42 minutes
Estimated purge volume	25 gallons

Comments: Grout weight = >14lb/gallon
Total Depth (BTOC) = +/- 2.5 inches
Final field parameters collected during well development
pH = 6.53
conductivity = 0.577
tempereture = 20.48
turbidity = 10.3

PROJECT NUMBER	WELL NUMBER		
258814	A039GW56I	SHEET 1	OF 1

CH2MHILL

WELL COMPLETION DIAGRAM

PROJECT : Charleston Naval Complex LOCATION : SWMU 39 Northing: 381182.8
DRILLING CONTRACTOR : Prosonic Drilling Corp. Easting: 2315047.1
DRILLING METHOD AND EQUIPMENT USED : Rotosonic, Truck-Mounted Rotosonic Rig
WATER LEVELS : 4.32 START : 11-Jan-06 / 1435 END : 11-Jan-06 / 1455 LOGGER : Darryl Gates

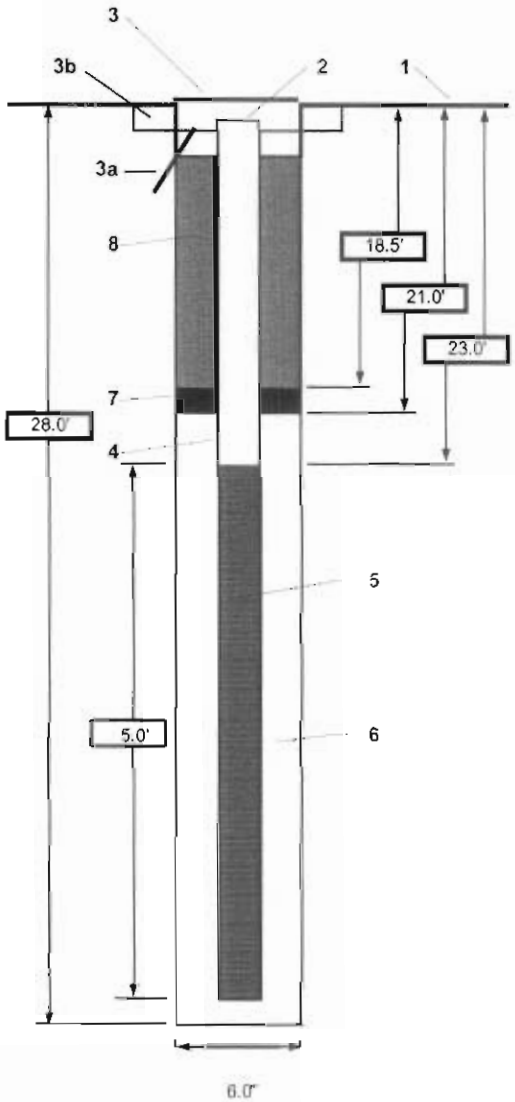

1- Ground elevation at well	Not obtained
2- Top of casing elevation	7.03
3- Wellhead protection cover type	Bolt-down manhole cover.
a) drain tube?	No
b) concrete pad dimensions	2' X 2' X 6"
4- Dia./type of well casing	2-inch / PVC
5- Type/slot size of screen	PVC / .010-circumslot
6- Type screen filter	20/30 silica sand
a) Quantity used	3 (50 lb) bags
7- Type of seal	Barroid bentonite chips
a) Quantity used	0.5 (50 lb) bag
8- Grout	
a) Grout mix used	Type I Portland cement w/ 5% bentonite
b) Method of placement	Trimmie
Development method	Surge block / Submersible pump
Development time	68 minutes
Estimated purge volume	34 gallons

Comments Grout weight = >14lb/gallon
Total Depth (BTOC) = +/- 2.5 inches
Final field parameters collected during well development
pH = 6.02
conductivity = 0.371
temperature = 20.56
turbidity = 14

PROJECT NUMBER	WELL NUMBER		
258814	A039GW57I	SHEET 1	OF 1

CH2MHILL

WELL COMPLETION DIAGRAM

PROJECT : Charleston Naval Complex — LOCATION : SWMU 39 — Northing: 381211.1
DRILLING CONTRACTOR : Prosonic Drilling Corp. — Easting: 381211.1
DRILLING METHOD AND EQUIPMENT USED : Rotosonic, Truck-Mounted Rotosonic Rig
WATER LEVELS : 4.44 — START : 12-Jan-06 / 0715 — END : 12-Jan-06 / 0750 — LOGGER : Darryl Gates

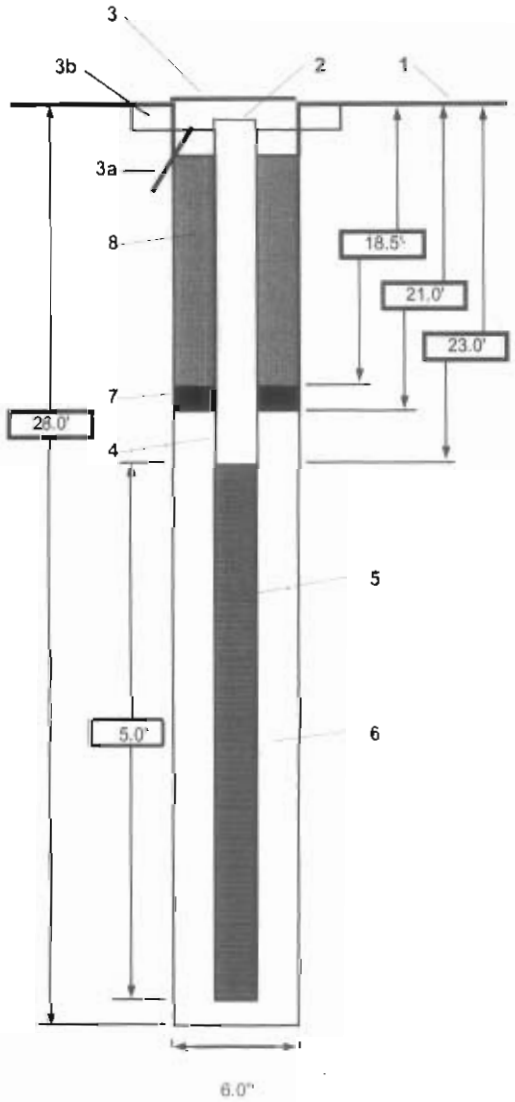

1- Ground elevation at well	Not obtained
2- Top of casing elevation	7.23
3- Wellhead protection cover type	Bolt-down manhole cover.
a) drain tube?	No
b) concrete pad dimensions	2' X 2' X 6"
4- Dia./type of well casing	2-inch / PVC
5- Type/slot size of screen	PVC / .010-circumslot
6- Type screen filter	20/30 silica sand
a) Quantity used	3 (50 lb) bags
7- Type of seal	Barroid bentonite chips
a) Quantity used	0.5 (50 lb) bag
8- Grout	
a) Grout mix used	Type I Portland cement w/ 5% bentonite
b) Method of placement	Trimmie
Development method	Surge block / Submersible pump
Development time	35 minutes
Estimated purge volume	20 gallons

Comments: Grout weight = >14lb/gallon
Total Depth (BTOC) = +/- 2.5 inches
Final field parameters collected during well development
pH = 6.09
conductivity = 0.404
temperature = 20.51
turbidity = 7.43

PROJECT NUMBER	WELL NUMBER		
258814	A039GW58I	SHEET 1	OF 1

CH2MHILL

WELL COMPLETION DIAGRAM

PROJECT : Charleston Naval Complex
LOCATION : SWMU 39
Northing: 381237.4
DRILLING CONTRACTOR : Prosonic Drilling Corp.
Easting: 2315052.3
DRILLING METHOD AND EQUIPMENT USED : Rotosonic, Truck-Mounted Rotosonic Rig
WATER LEVELS : 4.24
START : 12-Jan-06 / 0805
END : 12-Jan-06 / 0900
LOGGER : Darryl Gates

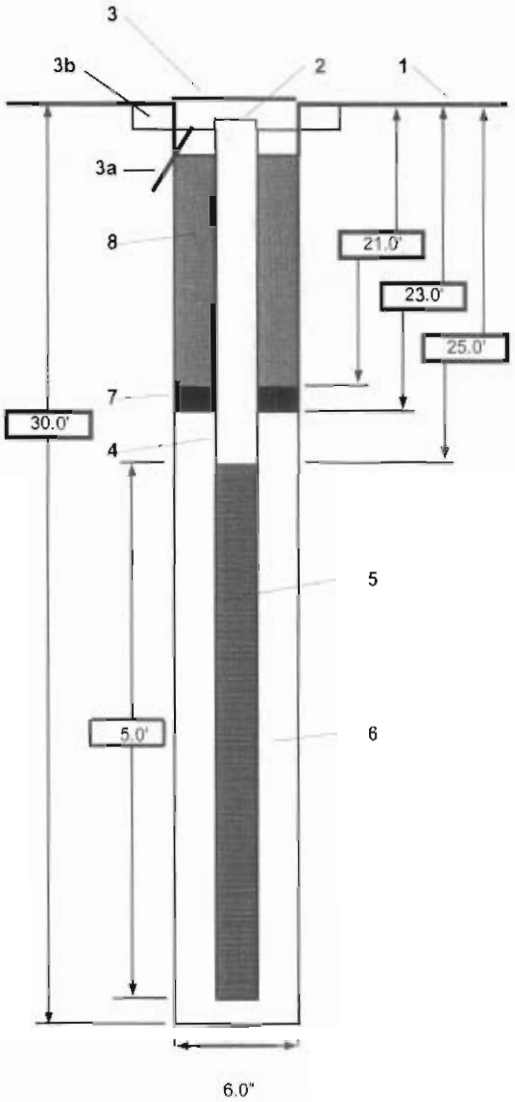

1- Ground elevation at well	Not obtained
2- Top of casing elevation	7.43
3- Wellhead protection cover type	Bolt-down manhole cover.
a) drain tube?	No
b) concrete pad dimensions	2' X 2' X 6"
4- Dia./type of well casing	2-inch / PVC
5- Type/slot size of screen	PVC / .010-circumslot
6- Type screen filter	20/30 silica sand
a) Quantity used	3 (50 lb) bags
7- Type of seal	Barroid bentonite chips
a) Quantity used	0.5 (50 lb) bag
8- Grout	
a) Grout mix used	Type I Portland cement w/ 5% bentonite
b) Method of placement	Trimmie
Development method	Surge block / Submersible pump
Development time	39 minutes
Estimated purge volume	29 gallons

Comments Grout weight = >14lb/gallon
Total Depth (BTOC) = +/- 2.5 inches

Final field parameters collected during well development
pH = 6.63
conductivity = 0.566
temperature = 20.62
turbidity = 12.6

PROJECT NUMBER	WELL NUMBER		
258814	A039GW59I	SHEET 1	OF 1

CH2MHILL

WELL COMPLETION DIAGRAM

PROJECT : Charleston Naval Complex
LOCATION : SWMU 39
Northing: 381271.5
Easting: 2315055.1
DRILLING CONTRACTOR : Prosonic Drilling Corp.
DRILLING METHOD AND EQUIPMENT USED : Rotosonic, Truck-Mounted Rotosonic Rig
WATER LEVELS : 4.51
START : 12-Jan-06 / 0920
END : 12-Jan-06 / 0940
LOGGER : Darryl Gates

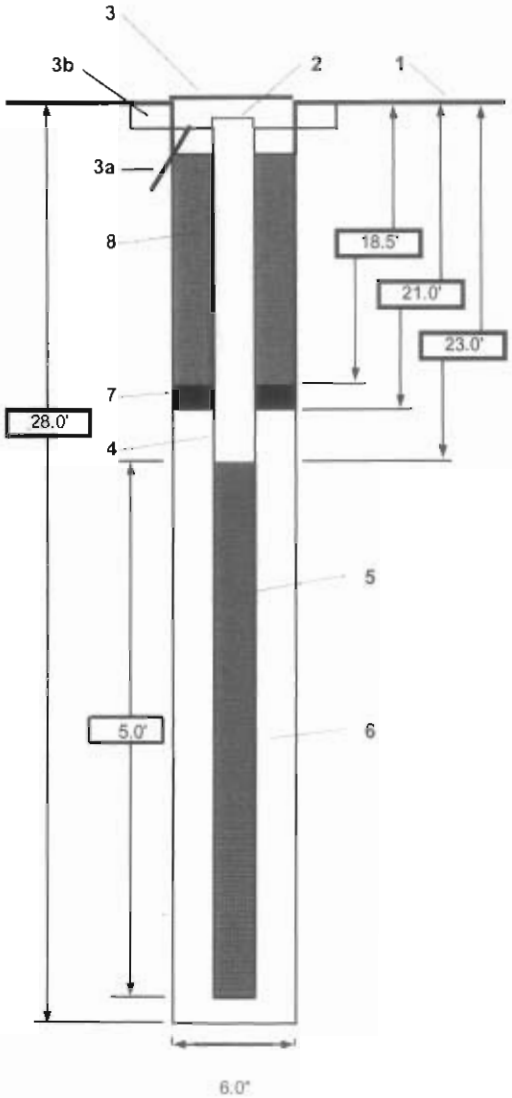

1- Ground elevation at well	Not obtained
2- Top of casing elevation	7.91
3- Wellhead protection cover type	Bolt-down manhole cover.
a) drain tube?	No
b) concrete pad dimensions	2' X 2' X 6"
4- Dia./type of well casing	2-inch / PVC
5- Type/slot size of screen	PVC / .010-circumslot
6- Type screen filter	20/30 silica sand
a) Quantity used	3 (50 lb) bags
7- Type of seal	Barroid bentonite chips
a) Quantity used	0.5 (50 lb) bag
8- Grout	
a) Grout mix used	Type I Portland cement w/ 5% bentonite
b) Method of placement	Trimmie
Development method	Surge block / Submersible pump
Development time	35 minutes
Estimated purge volume	29 gallons

Comments: Grout weight = >14lb/gallon
Total Depth (BTOC) = +/- 2.5 inches
Final field parameters collected during well development
pH = 6.67
conductivity = 0.367
temperature = 20.86
turbidity = 8

PROJECT NUMBER	WELL NUMBER		
258814	A039GW60I	SHEET 1	OF 1

CH2MHILL

WELL COMPLETION DIAGRAM

PROJECT : Charleston Naval Complex — LOCATION : SWMU 39 — Northing: 381281.4
DRILLING CONTRACTOR : Prosonic Drilling Corp. — Easting: 2315056.0
DRILLING METHOD AND EQUIPMENT USED : Rotosonic, Truck-Mounted Rotosonic Rig
WATER LEVELS : 4.61 — START : 12-Jan-06 / 0920 — END : 12-Jan-06 / 0940 — LOGGER : Darryl Gates

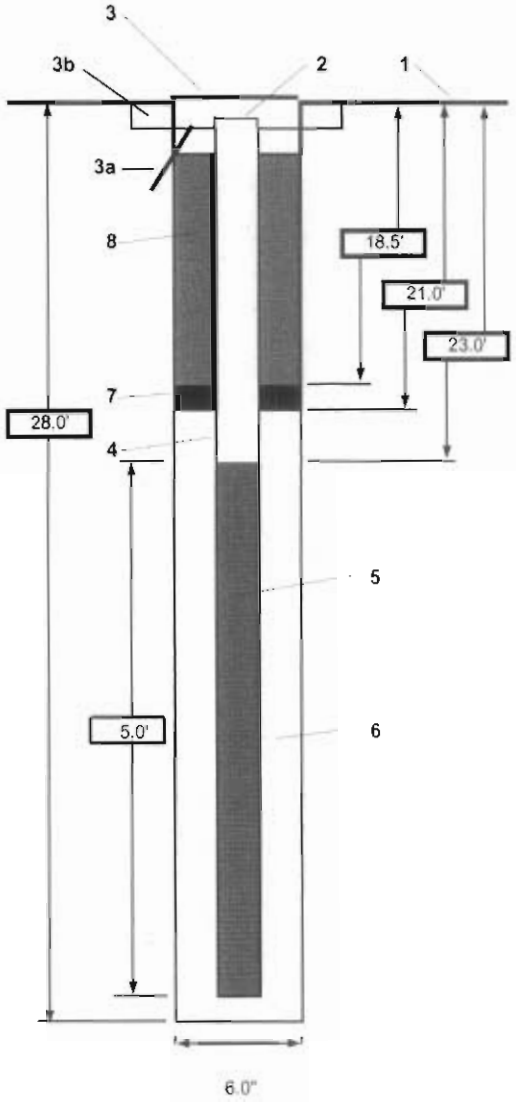

1- Ground elevation at well	Not obtained
2- Top of casing elevation	7.80
3- Wellhead protection cover type	Bolt-down manhole cover.
a) drain tube?	No
b) concrete pad dimensions	2' X 2' X 6"
4- Dia./type of well casing	2-inch / PVC
5- Type/slot size of screen	PVC / .010-circumslot
6- Type screen filter	20/30 silica sand
a) Quantity used	3 (50 lb) bags
7- Type of seal	Barroid bentonite chips
a) Quantity used	0.5 (50 lb) bag
8- Grout	
a) Grout mix used	Type I Portland cement w/ 5% bentonite
b) Method of placement	Trimmie
Development method	Surge block / Submersible pump
Development time	35 minutes
Estimated purge volume	13 gallons

Comments: Grout weight = >14lb/gallon
Total Depth (BTOC) = +/- 2.5 inches
Final field parameters collected during well development
pH = 6.70
conductivity = 0.496
temperature = 20.70
turbidity = 6.0

PROJECT NUMBER	WELL NUMBER	
258814	A039GW035D	SHEET 1 OF 1

CH2MHILL

WELL COMPLETION DIAGRAM

PROJECT : Charleston Naval Complex, SWMU 39 LOCATION : Charleston, SC Northing 381019.2
DRILLING CONTRACTOR : Boart Longyear Drilling Corp Easting 2315720.5
DRILLING METHOD AND EQUIPMENT USED : Truck-mouned Rotosonic Drill Rig
WATER LEVELS : 8.23 START : 12/06/2004 END : 12/06/2004 LOGGER : D. Gates

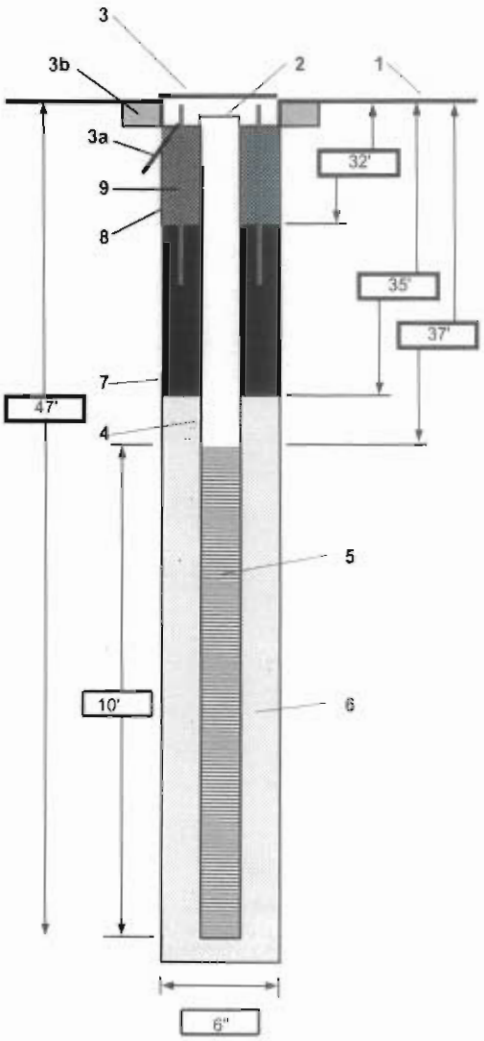

1- Ground elevation at well	Not obtained
2- Top of casing elevation	7.71
3- Wellhead protection cover type	Flush-mounted boltdown manhole
a) drain tube?	no
b) concrete pad dimensions	2' x 2' x 6"
4- Dia./type of well casing	2-inch Schedule 40 PVC
5- Type/slot size of screen	2-inch Schedule 40 PVC, 0.010" slot screen
6- Type screen filter	20/30 silica sand
a) Quantity used	3.5 (50 lb) bags of sand
7- Type of seal	3/8" barroid bentonite chips, hydrated
a) Quantity used	1/2 (50 lb) bucket
8- Grout	
a) Grout mix used	Type I Portland cement w/5% bentonite
b) Method of placement	Trimee from bottom of hole
c) Vol. of well casing grout	
9- CPVC sleeve	Not applicable
Development method	Surge block / submersable pump
Development time	48 minutes
Estimated purge volume	48 gallons

Comments Grout weight = >14lb/gallon
Total Depth (BTOC) = +/- 2.5 inches
Final field parameters collected during well development
pH = 6.28
conductivity = .590
temperature = 20.6
turbidity = 7.0

Note: Diagram not to scale.

PROJECT NUMBER	WELL NUMBER	
258814	A039GW036D	SHEET 1 OF 1

CH2MHILL

WELL COMPLETION DIAGRAM

PROJECT : Charleston Naval Complex, SWMU 39 LOCATION : Charleston, SC Northing 381028.7
DRILLING CONTRACTOR : Boart Longyear Drilling Corp Easting 2315718.3
DRILLING METHOD AND EQUIPMENT USED : Truck-mouned Rotosonic Drill Rig
WATER LEVELS : 7.91 START : 12/07/2004 END : 12/07/2004 LOGGER : D. Gates

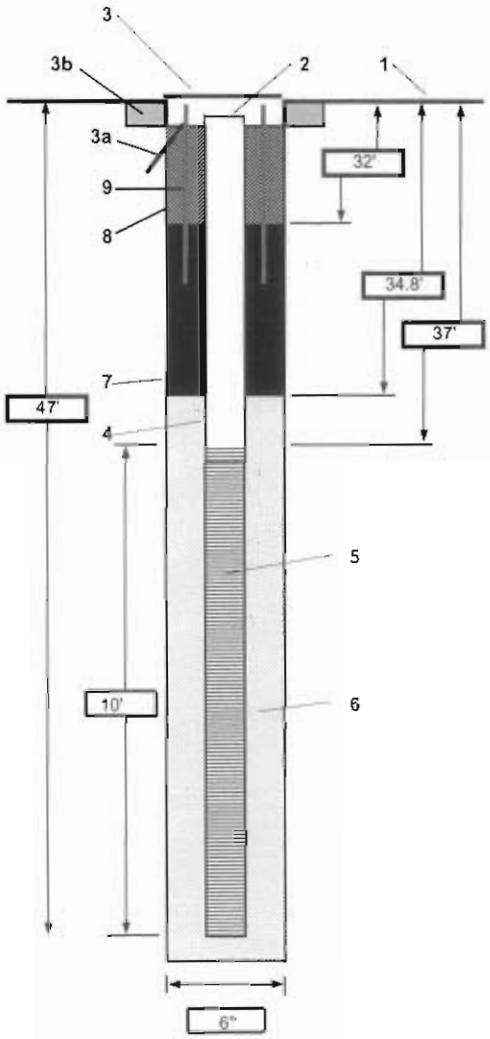

1- Ground elevation at well	Not obtained
2- Top of casing elevation	7.54
3- Wellhead protection cover type	Flush-mounted boltdown manhole
a) drain tube?	no
b) concrete pad dimensions	2' x 2' x 6"
4- Dia./type of well casing	2-inch Schedule 80 PVC
5- Type/slot size of screen	2-inch Schedule 80 PVC, 0.010" slot screen
6- Type screen filter	20/30 silica sand
a) Quantity used	3.5 (50 lb) bags of sand
7- Type of seal	3/8" barroid bentonite chips, hydrated
a) Quantity used	1/2 (50 lb) bucket
8- Grout	
a) Grout mix used	Type I Portland cement w/5% bentonite
b) Method of placement	Trimee from bottom of hole
c) Vol. of well casing grout	
9- CPVC sleeve	Not applicable
Development method	Surge block / submersable pump
Development time	30 minutes
Estimated purge volume	30 gallons

Comments Grout weight = >14lb/gallon
Total Depth (BTOC) = +/- 2.5 inches
Final field parameters collected during well development
pH = 6.29
conductivity = .509
temperature = 20.9
turbidity = 1.0

Note: Diagram not to scale.

PROJECT NUMBER	WELL NUMBER	
258814	A039GW037D	SHEET 1 OF 1

CH2MHILL

WELL COMPLETION DIAGRAM

PROJECT : Charleston Naval Complex, SWMU 39 LOCATION : Charleston, SC Northing 381035.3
DRILLING CONTRACTOR : Boart Longyear Drilling Corp Easting 2315734.6
DRILLING METHOD AND EQUIPMENT USED : Truck-mouned Rotosonic Drill Rig
WATER LEVELS : 8.02 START : 12/07/2004 END : 12/07/2004 LOGGER : D. Gates

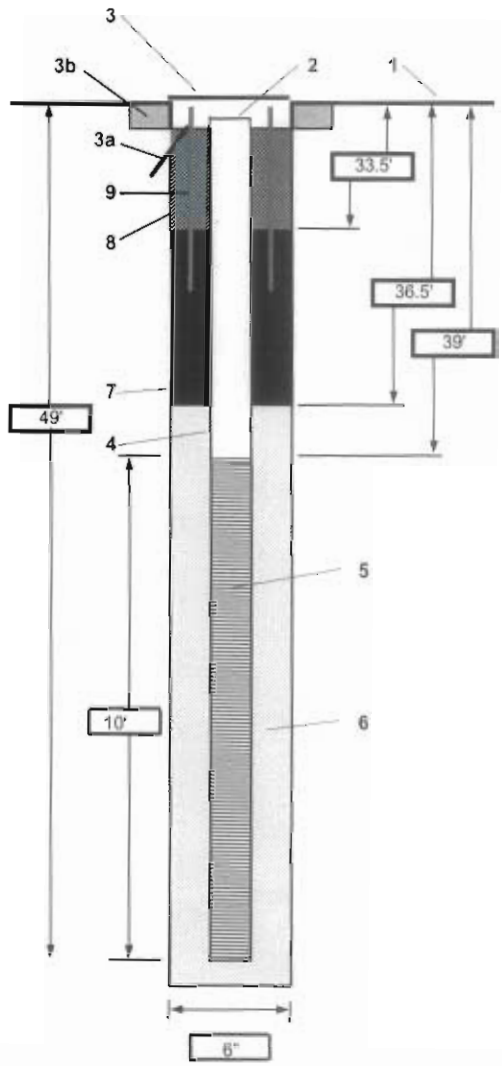

Note: Diagram not to scale.

1- Ground elevation at well	Not obtained
2- Top of casing elevation	7.66
3- Wellhead protection cover type	Flush-mounted boltdown manhole
a) drain tube?	no
b) concrete pad dimensions	2' x 2' x 6"
4- Dia./type of well casing	2-inch Schedule 40 PVC
5- Type/slot size of screen	2-inch Schedule 40 PVC, 0.010" slot screen
6- Type screen filter	20/30 silica sand
a) Quantity used	3.5 (50 lb) bags of sand
7- Type of seal	3/8" barroid bentonite chips, hydrated
a) Quantity used	1/2 (50 lb) bucket
8- Grout	
a) Grout mix used	Type I Portland cement w/5% bentonite
b) Method of placement	Trimee from bottom of hole
c) Vol. of well casing grout	
9- CPVC sleeve	Not applicable
Development method	Surge block / submersable pump
Development time	28 minutes
Estimated purge volume	30 gallons

Comments Grout weight = >14#/gallon
Total Depth (BTOC) = +/- 2.5 inches
Final field parameters collected during well development
pH = 6.35
conductivity = 0.96
temperature = 21.0
turbidity = 3.0

PROJECT NUMBER	WELL NUMBER	
258814	A039GW038D	SHEET 1 OF 1

CH2MHILL

WELL COMPLETION DIAGRAM

PROJECT : Charleston Naval Complex, SWMU 39 LOCATION : Charleston, SC Northing 381029.3
DRILLING CONTRACTOR : Boart Longyear Drilling Corp Easting 2315703.1
DRILLING METHOD AND EQUIPMENT USED : Truck-mouned Rotosonic Drill Rig
WATER LEVELS : 7.98 START : 12/07/2004 END : 12/07/2004 LOGGER : D. Gates

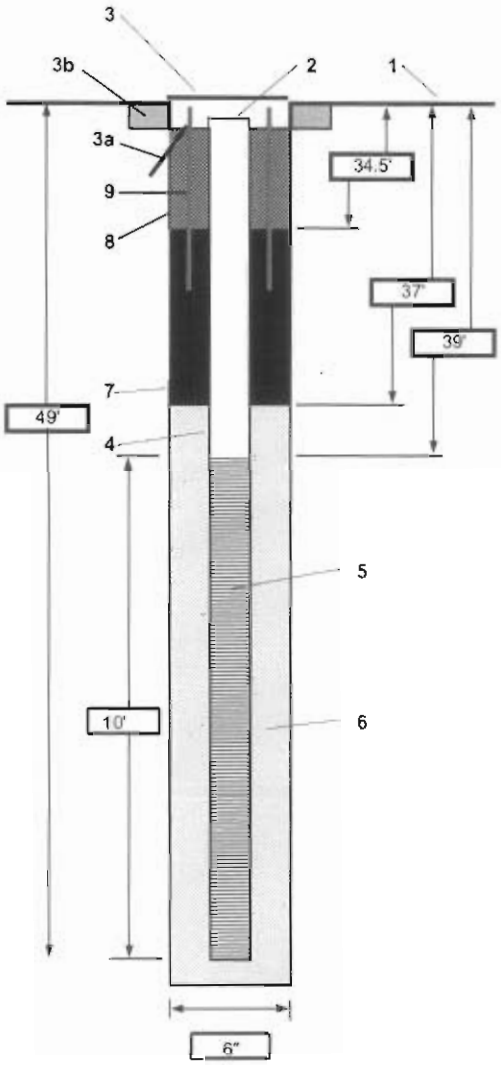

1- Ground elevation at well	Not obtained
2- Top of casing elevation	7.81
3- Wellhead protection cover type	Flush-mounted boltdown manhole
a) drain tube?	no
b) concrete pad dimensions	2' x 2' x 6"
4- Dia./type of well casing	2-inch Schedule 40 PVC
5- Type/slot size of screen	2-inch Schedule 40 PVC, 0.010" slot screen
6- Type screen filter	20/30 silica sand
a) Quantity used	3.5 (50 lb) bags of sand
7- Type of seal	3/8" barroid bentonite chips, hydrated
a) Quantity used	1/2 (50 lb) bucket
8- Grout	
a) Grout mix used	Type I Portland cement w/5% bentonite
b) Method of placement	Trimee from bottom of hole
c) Vol. of well casing grout	
9- CPVC sleeve	Not applicable
Development method	Surge block / submersable pump
Development time	31 minutes
Estimated purge volume	30 gallons

Comments Grout weight = >14lb/gallon
Total Depth (BTOC) = +/- 2.5 inches
Final field parameters collected during well development
pH = 6.35
conductivity = 1.14
temperature = 21.2
turbidity = 6.0

Note: Diagram not to scale.

CH2MHILL

PROJECT NUMBER	WELL NUMBER	
258814	A039GW039D	SHEET 1 OF 1

WELL COMPLETION DIAGRAM

PROJECT : Charleston Naval Complex, SWMU 39 LOCATION : Charleston, SC Northing 381057.5
DRILLING CONTRACTOR : Boart Longyear Drilling Corp Easting 2315774.3
DRILLING METHOD AND EQUIPMENT USED : Truck-mouned Rotosonic Drill Rig
WATER LEVELS : 7.73 START : 12/07/2004 END : 12/07/2004 LOGGER : D. Gates

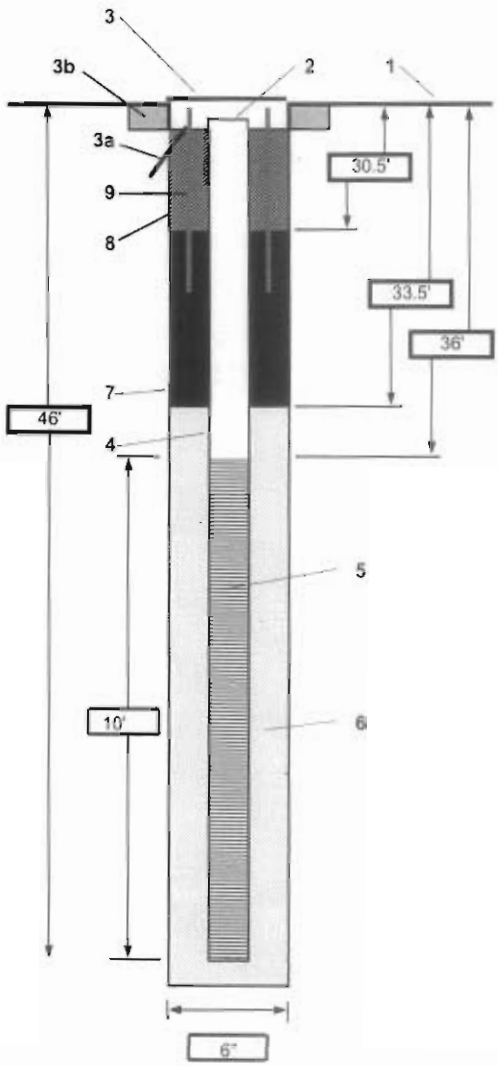

1- Ground elevation at well	Not obtained
2- Top of casing elevation	7.21
3- Wellhead protection cover type	Flush-mounted boltdown manhole
a) drain tube?	no
b) concrete pad dimensions	2' x 2' x 6"
4- Dia./type of well casing	2-inch Schedule 80 PVC
5- Type/slot size of screen	2-inch Schedule 80 PVC, 0.010" slot screen
6- Type screen filter	20/30 silica sand
a) Quantity used	3.5 (50 lb) bags of sand
7- Type of seal	3/8" barroid bentonite chips, hydrated
a) Quantity used	1/2 (50 lb) bucket
8- Grout	
a) Grout mix used	Type I Portland cement w/5% bentonite
b) Method of placement	Trimee from bottom of hole
c) Vol. of well casing grout	
9- CPVC sleeve	Not applicable
Development method	Surge block / submersable pump
Development time	46 minutes
Estimated purge volume	48 gallons

Comments Grout weight = >14lb/gallon
Total Depth (BTOC) = +/- 2.5 inches
Final field parameters collected during well development
pH = 6.52
conductivity = .793
temperature = 20.5
turbidity = 6.0

Note: Diagram not to scale.

PROJECT NUMBER	WELL NUMBER	
258814	A039GW040D	SHEET 1 OF 1

CH2MHILL

WELL COMPLETION DIAGRAM

PROJECT : Charleston Naval Complex, SWMU 39 LOCATION : Charleston, SC Northing 381053.0
DRILLING CONTRACTOR : Boart Longyear Drilling Corp Easting 2315756.5
DRILLING METHOD AND EQUIPMENT USED : Truck-mouned Rotosonic Drill Rig
WATER LEVELS : 7.32 START : 12/08/2004 END : 12/08/2004 LOGGER : D. Gates

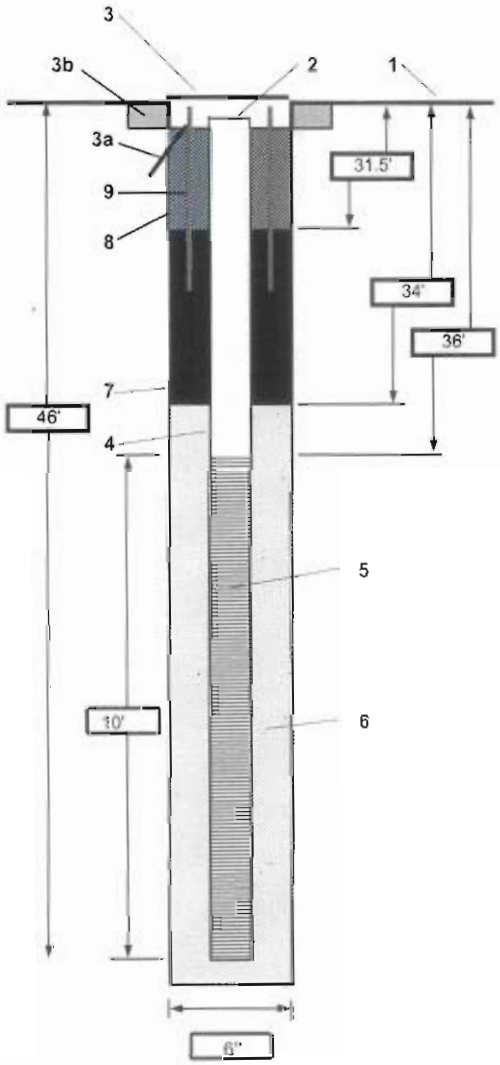

1- Ground elevation at well	Not obtained
2- Top of casing elevation	7.45
3- Wellhead protection cover type	Flush-mounted boltdown manhole
a) drain tube?	no
b) concrete pad dimensions	2' x 2' x 6"
4- Dia./type of well casing	2-inch Schedule 80 PVC
5- Type/slot size of screen	2-inch Schedule 80 PVC, 0.010" slot screen
6- Type screen filter	20/30 silica sand
a) Quantity used	3.5 (50 lb) bags of sand
7- Type of seal	3/8" barroid bentonite chips, hydrated
a) Quantity used	1/2 (50 lb) bucket
8- Grout	
a) Grout mix used	Type I Portland cement w/5% bentonite
b) Method of placement	Trimee from bottom of hole
c) Vol. of well casing grout	
9- CPVC sleeve	Not applicable
Development method	Surge block / submersable pump
Development time	23 minutes
Estimated purge volume	25 gallons

Comments Grout weight = >14lb/gallon
Total Depth (BTOC) = +/- 2.5 inches
Final field parameters collected during well development
pH = 6.42
conductivity = .612
temperature = 20.5
turbidity = 3.0

Note: Diagram not to scale.

PROJECT NUMBER	WELL NUMBER	
258814	A039GW041D	SHEET 1 OF 1

CH2MHILL

WELL COMPLETION DIAGRAM

PROJECT : Charleston Naval Complex, SWMU 39 LOCATION : Charleston, SC Northing 381046.7
DRILLING CONTRACTOR : Boart Longyear Drilling Corp Easting 2315737.8
DRILLING METHOD AND EQUIPMENT USED : Truck-mouned Rotosonic Drill Rig
WATER LEVELS : 8.01 START : 12/08/2004 END : 12/08/2004 LOGGER : D. Gates

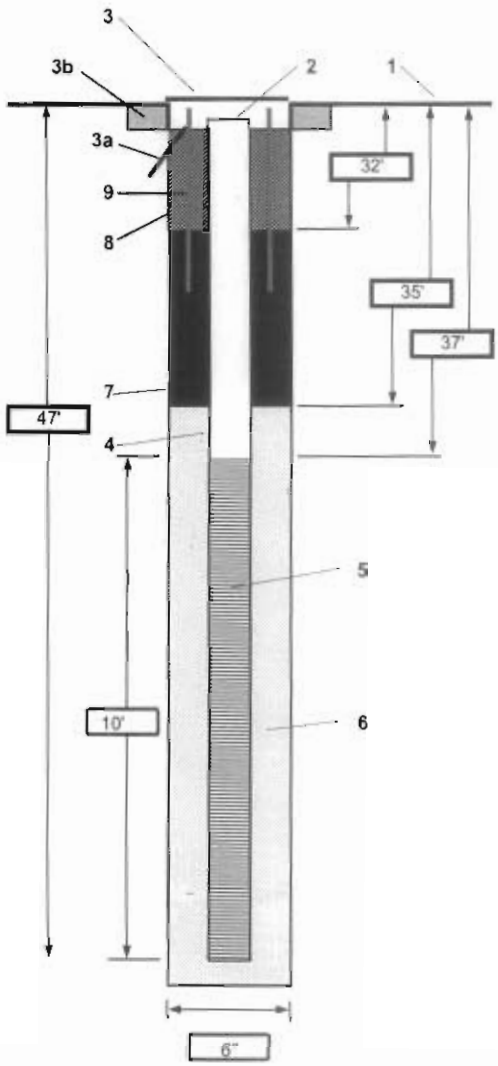

Note: Diagram not to scale.

1- Ground elevation at well	Not obtained
2- Top of casing elevation	7.49
3- Wellhead protection cover type	Flush-mounted boltdown manhole
a) drain tube?	no
b) concrete pad dimensions	2' x 2' x 6"
4- Dia./type of well casing	2-inch Schedule 80 PVC
5- Type/slot size of screen	2-inch Schedule 80 PVC, 0.010" slot screen
6- Type screen filter	20/30 silica sand
a) Quantity used	3.5 (50 lb) bags of sand
7- Type of seal	3/8" barroid bentonite chips, hydrated
a) Quantity used	1/2 (50 lb) bucket
8- Grout	
a) Grout mix used	Type I Portland cement w/5% bentonite
b) Method of placement	Trimee from bottom of hole
c) Vol. of well casing grout	
9- CPVC sleeve	Not applicable
Development method	Surge block / submersable pump
Development time	33 minutes
Estimated purge volume	35 gallons

Comments: Grout weight = >14lb/gallon
Total Depth (BTOC) = +/- 2.5 inches
Final field parameters collected during well development
pH = 6.81
conductivity = .793
temperature = 20.9
turbidity = 3.0

CH2MHILL

PROJECT NUMBER	WELL NUMBER	
258814	A039GW042D	SHEET 1 OF 1

WELL COMPLETION DIAGRAM

PROJECT : Charleston Naval Complex, SWMU 39 LOCATION : Charleston, SC Northing 381043.1
DRILLING CONTRACTOR : Boart Longyear Drilling Corp Easting 2315719.1
DRILLING METHOD AND EQUIPMENT USED : Truck-mouned Rotosonic Drill Rig
WATER LEVELS : 7.02 START : 12/08/2004 END : 12/08/2004 LOGGER : D. Gates

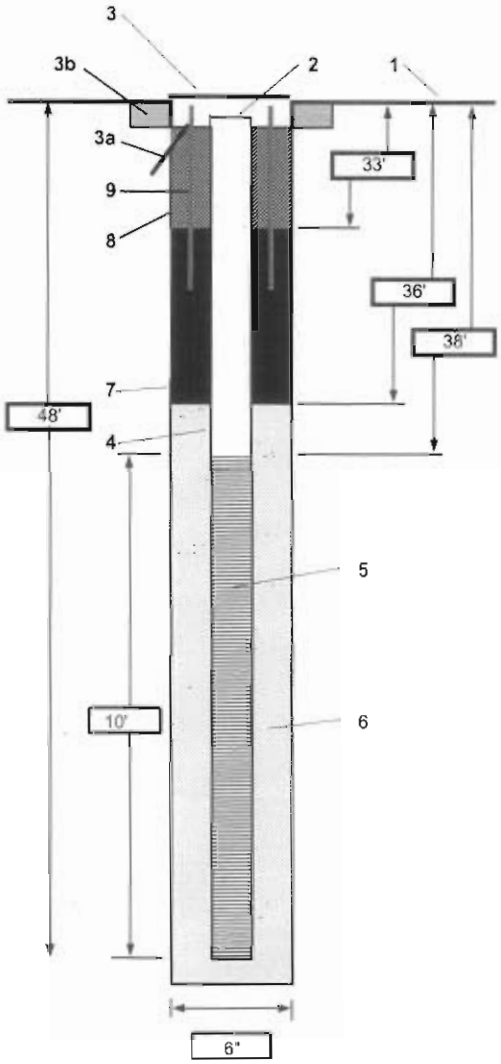

1- Ground elevation at well	Not obtained
2- Top of casing elevation	7.42
3- Wellhead protection cover type	Flush-mounted boltdown manhole
a) drain tube?	no
b) concrete pad dimensions	2' x 2' x 6"
4- Dia./type of well casing	2-inch Schedule 80 PVC
5- Type/slot size of screen	2-inch Schedule 80 PVC, 0.010" slot screen
6- Type screen filter	20/30 silica sand
a) Quantity used	3.5 (50 lb) bags of sand
7- Type of seal	3/8" barroid bentonite chips, hydrated
a) Quantity used	1/2 (50 lb) bucket
8- Grout	
a) Grout mix used	Type I Portland cement w/5% bentonite
b) Method of placement	Trimee from bottom of hole
c) Vol. of well casing grout	
9- CPVC sleeve	Not applicable
Development method	Surge block / submersable pump
Development time	23 minutes
Estimated purge volume	28 gallons

Comments Grout weight = >14lb/gallon
Total Depth (BTOC) = +/- 2.5 inches
Final field parameters collected during well development
pH = 5.96
conductivity = 0.95
temperature = 21.5
turbidity = 3.0

Note: Diagram not to scale.

CH2MHILL

PROJECT NUMBER	WELL NUMBER	
258814	A039GW043D	SHEET 1 OF 1

WELL COMPLETION DIAGRAM

PROJECT : Charleston Naval Complex, SWMU 39 LOCATION : Charleston, SC Northing 381039.1
DRILLING CONTRACTOR : Boart Longyear Drilling Corp Easting 2315700.8
DRILLING METHOD AND EQUIPMENT USED : Truck-mouned Rotosonic Drill Rig
WATER LEVELS : 7.87 START : 12/08/2004 END : 12/08/2004 LOGGER : D. Gates

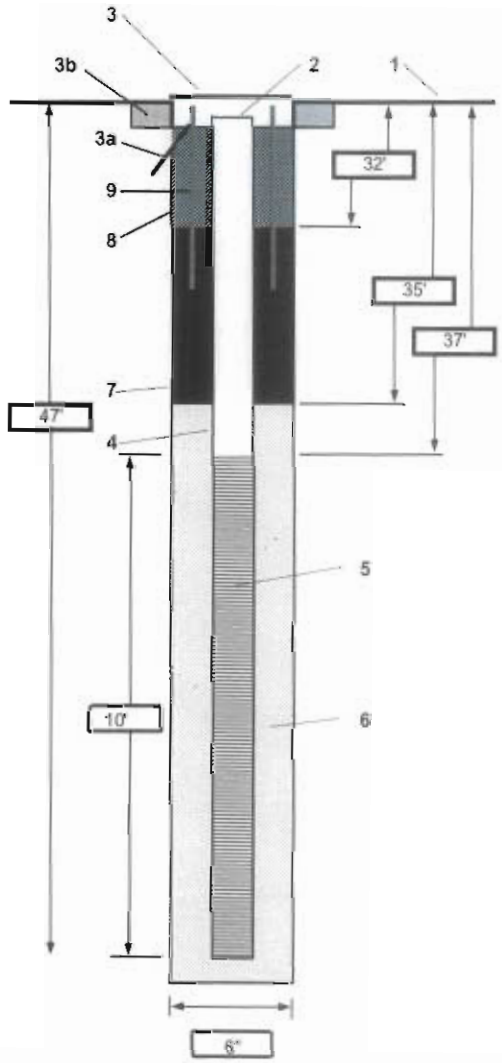

1- Ground elevation at well	Not obtained
2- Top of casing elevation	7.7
3- Wellhead protection cover type	Flush-mounted boltdown manhole
a) drain tube?	no
b) concrete pad dimensions	2' x 2' x 6"
4- Dia./type of well casing	2-inch Schedule 80 PVC
5- Type/slot size of screen	2-inch Schedule 80 PVC, 0.010" slot screen
6- Type screen filter	20/30 silica sand
a) Quantity used	3.5 (50 lb) bags of sand
7- Type of seal	3/8" barroid bentonite chips, hydrated
a) Quantity used	1/2 (50 lb) bucket
8- Grout	
a) Grout mix used	Type I Portland cement w/5% bentonite
b) Method of placement	Trimee from bottom of hole
c) Vol. of well casing grout	
9- CPVC sleeve	Not applicable
Development method	Surge block / submersable pump
Development time	26 minutes
Estimated purge volume	30 gallons

Comments Grout weight = >14lb/gallon
Total Depth (BTOC) = +/- 2.5 inches
Final field parameters collected during well development
pH = 6.13
conductivity = .523
temperature = 21.7
turbidity = 3.0

Note: Diagram not to scale.

CH2MHILL

PROJECT NUMBER	WELL NUMBER	
258814	A039GW044D	SHEET 1 OF 1

WELL COMPLETION DIAGRAM

PROJECT : Charleston Naval Complex, SWMU 39 LOCATION : Charleston, SC Northing 381034.5
DRILLING CONTRACTOR : Boart Longyear Drilling Corp Easting 2315683.7
DRILLING METHOD AND EQUIPMENT USED : Truck-mouned Rotosonic Drill Rig
WATER LEVELS : 7.98 START : 12/08/2004 END : 12/08/2004 LOGGER : D. Gates

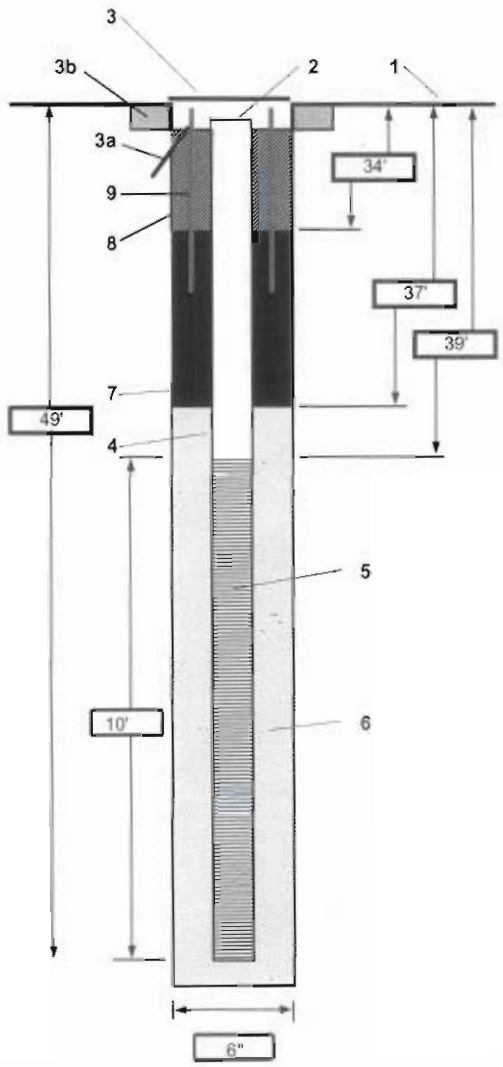

1- Ground elevation at well	Not obtained
2- Top of casing elevation	7.78
3- Wellhead protection cover type	Flush-mounted boltdown manhole
a) drain tube?	no
b) concrete pad dimensions	2' x 2' x 6"
4- Dia./type of well casing	2-inch Schedule 80 PVC
5- Type/slot size of screen	2-inch Schedule 80 PVC, 0.010" slot screen
6- Type screen filter	20/30 silica sand
a) Quantity used	3.5 (50 lb) bags of sand
7- Type of seal	3/8" barroid bentonite chips, hydrated
a) Quantity used	1/2 (50 lb) bucket
8- Grout	
a) Grout mix used	Type I Portland cement w/5% bentonite
b) Method of placement	Trimee from bottom of hole
c) Vol. of well casing grout	
9- CPVC sleeve	Not applicable
Development method	Surge block / submersable pump
Development time	49 minutes
Estimated purge volume	40 gallons

Comments Grout weight = >14lb/gallon
Total Depth (BTOC) = +/- 2.5 inches
Final field parameters collected during well development
pH = 5.56
conductivity = .783
temperature = 21.8
turbidity = 0

Note: Diagram not to scale.

PROJECT NUMBER	WELL NUMBER	
258814	A039GW045D	SHEET 1 OF 1

CH2MHILL

WELL COMPLETION DIAGRAM

PROJECT : Charleston Naval Complex, SWMU 39 LOCATION : Charleston, SC Northing 381064.2
DRILLING CONTRACTOR : Boart Longyear Drilling Corp Easting 2315762.6
DRILLING METHOD AND EQUIPMENT USED : Truck-mouned Rotosonic Drill Rig
WATER LEVELS : 19.23 START : 12/09/2004 END : 12/09/2004 LOGGER : D. Gates

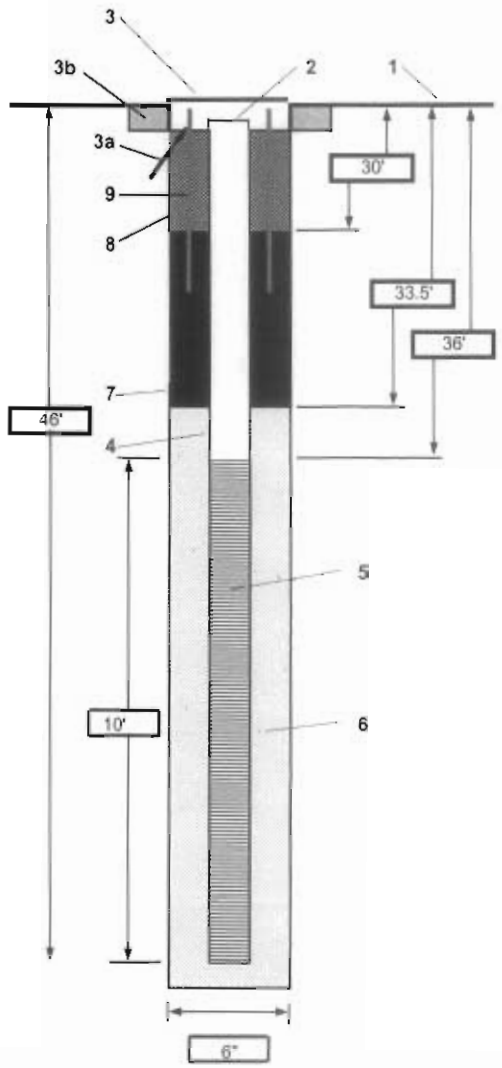

1- Ground elevation at well	Not obtained
2- Top of casing elevation	7.78
3- Wellhead protection cover type	Flush-mounted boltdown manhole
a) drain tube?	no
b) concrete pad dimensions	2' x 2' x 6"
4- Dia./type of well casing	2-inch Schedule 40 PVC
5- Type/slot size of screen	2-inch Schedule 40 PVC, 0.010" slot screen
6- Type screen filter	20/30 silica sand
a) Quantity used	3.5 (50 lb) bags of sand
7- Type of seal	3/8" barroid bentonite chips, hydrated
a) Quantity used	1/2 (50 lb) bucket
8- Grout	
a) Grout mix used	Type I Portland cement w/5% bentonite
b) Method of placement	Trimee from bottom of hole
c) Vol. of well casing grout	
9- CPVC sleeve	Not applicable
Development method	Surge block / submersable pump
Development time	38 minutes
Estimated purge volume	40 gallons

Comments Grout weight = >14lb/gallon
Total Depth (BTOC) = +/- 2.5 inches
Final field parameters collected during well development
pH = 5.82
conductivity = .755
temperature = 21.7
turbidity = 1.0

Note: Diagram not to scale.

PROJECT NUMBER	WELL NUMBER	
258814	A039GW046D	SHEET 1 OF 1

CH2MHILL

WELL COMPLETION DIAGRAM

PROJECT : Charleston Naval Complex, SWMU 39 LOCATION : Charleston, SC Northing 381198.8
DRILLING CONTRACTOR : Boart Longyear Drilling Corp Easting 2315707.6
DRILLING METHOD AND EQUIPMENT USED : Truck-mouned Rotosonic Drill Rig
WATER LEVELS : 16.31 START : 12/09/2004 END : 12/09/2004 LOGGER : D. Gates

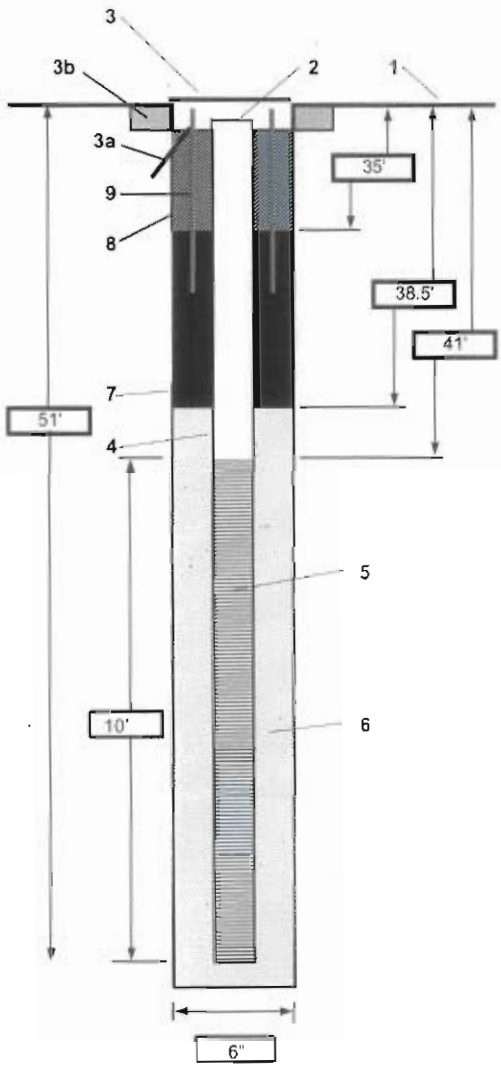

Note: Diagram not to scale.

1- Ground elevation at well	Not obtained
2- Top of casing elevation	8.34
3- Wellhead protection cover type	Flush-mounted boltdown manhole
a) drain tube?	no
b) concrete pad dimensions	2' x 2' x 6"
4- Dia./type of well casing	2-inch Schedule 40 PVC
5- Type/slot size of screen	2-inch Schedule 40 PVC, 0.010" slot screen
6- Type screen filter	20/30 silica sand
a) Quantity used	3.5 (50 lb) bags of sand
7- Type of seal	3/8" barroid bentonite chips, hydrated
a) Quantity used	1/2 (50 lb) bucket
8- Grout	
a) Grout mix used	Type I Portland cement w/5% bentonite
b) Method of placement	Trimee from bottom of hole
c) Vol. of well casing grout	
9- CPVC sleeve	Not applicable
Development method	Surge block / submersable pump
Development time	32 minutes
Estimated purge volume	40 gallons

Comments Grout weight = >14lb/gallon
Total Depth (BTOC) = +/- 2.5 inches
Final field parameters collected during well development
pH = 5.77
conductivity = .264
temperature = 22
turbidity = 3.0

CH2MHILL

PROJECT NUMBER	WELL NUMBER	
258814	A039GW047D	SHEET 1 OF 1

WELL COMPLETION DIAGRAM

PROJECT : Charleston Naval Complex, SWMU 39 LOCATION : Charleston, SC Northing 381213.2
DRILLING CONTRACTOR : Boart Longyear Drilling Corp Easting 2315701.9
DRILLING METHOD AND EQUIPMENT USED : Truck-mouned Rotosonic Drill Rig
WATER LEVELS : 10.21 START : 12/09/2004 END : 12/09/2004 LOGGER : D. Gates

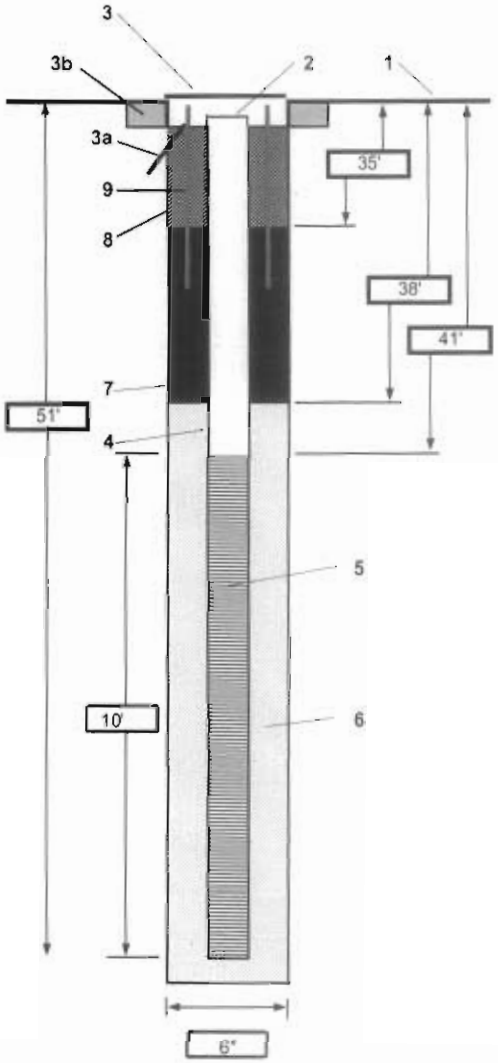

1- Ground elevation at well	Not obtained
2- Top of casing elevation	8.43
3- Wellhead protection cover type	Flush-mounted boltdown manhole
a) drain tube?	no
b) concrete pad dimensions	2' x 2' x 6"
4- Dia./type of well casing	2-inch Schedule 80 PVC
5- Type/slot size of screen	2-inch Schedule 80 PVC, 0.010" slot screen
6- Type screen filter	20/30 silica sand
a) Quantity used	3.5 (50 lb) bags of sand
7- Type of seal	3/8" barroid bentonite chips, hydrated
a) Quantity used	1/2 (50 lb) bucket
8- Grout	
a) Grout mix used	Type I Portland cement w/5% bentonite
b) Method of placement	Trimee from bottom of hole
c) Vol. of well casing grout	
9- CPVC sleeve	Not applicable
Development method	Surge block / submersable pump
Development time	28 minutes
Estimated purge volume	30 gallons

Comments Grout weight = >14lb/gallon
Total Depth (BTOC) = +/- 2.5 inches
Final field parameters collected during well development
pH = 6.21
conductivity = .288
temperature = 22
turbidity = 0

Note: Diagram not to scale.

PROJECT NUMBER	WELL NUMBER	
258814	A039GW048D	SHEET 1 OF 1

CH2MHILL

WELL COMPLETION DIAGRAM

PROJECT : Charleston Naval Complex, SWMU 39 LOCATION : Charleston, SC Northing 381224.2
DRILLING CONTRACTOR : Boart Longyear Drilling Corp Easting 2315708.9
DRILLING METHOD AND EQUIPMENT USED : Truck-mouned Rotosonic Drill Rig
WATER LEVELS : 11.27 START : 12/09/2004 END : 12/09/2004 LOGGER : D. Gates

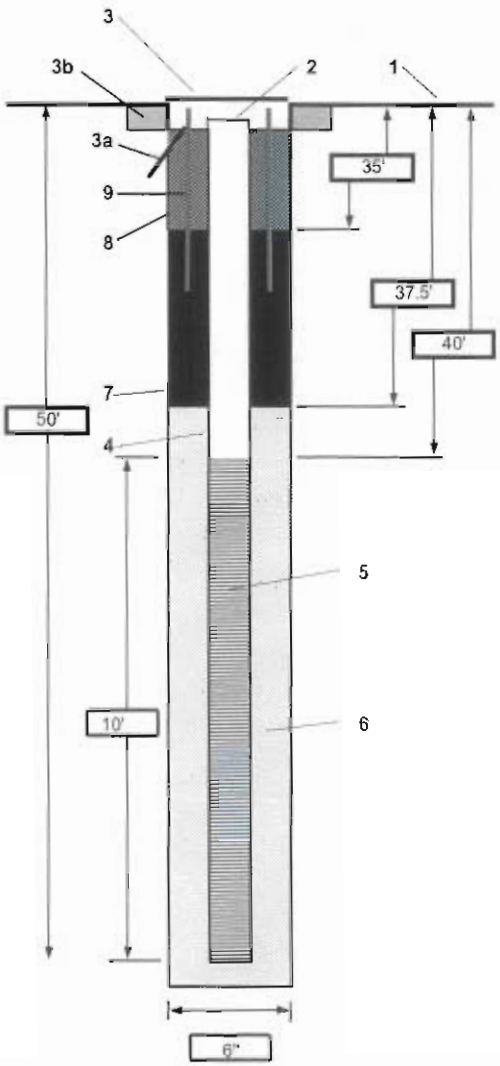

1- Ground elevation at well	Not obtained
2- Top of casing elevation	8.62
3- Wellhead protection cover type	Flush-mounted boltdown manhole
a) drain tube?	no
b) concrete pad dimensions	2' x 2' x 6"
4- Dia./type of well casing	2-inch Schedule 40 PVC
5- Type/slot size of screen	2-inch Schedule 40 PVC, 0.010" slot screen
6- Type screen filter	20/30 silica sand
a) Quantity used	3.5 (50 lb) bags of sand
7- Type of seal	3/8" barroid bentonite chips, hydrated
a) Quantity used	1/2 (50 lb) bucket
8- Grout	
a) Grout mix used	Type I Portland cement w/5% bentonite
b) Method of placement	Trimee from bottom of hole
c) Vol. of well casing grout	
9- CPVC sleeve	Not applicable
Development method	Surge block / submersable pump
Development time	27 minutes
Estimated purge volume	30 gallons

Comments Grout weight = >14lb/gallon
Total Depth (BTOC) = +/- 2.5 inches
Final field parameters collected during well development
pH = 6.09
conductivity = .232
temperature = 22
turbidity = 1.0

Note: Diagram not to scale.

PROJECT NUMBER	WELL NUMBER	
258814	A039GW049D	SHEET 1 OF 1

CH2MHILL

WELL COMPLETION DIAGRAM

PROJECT : Charleston Naval Complex, SWMU 39 LOCATION : Charleston, SC Northing 381233.2
DRILLING CONTRACTOR : Boart Longyear Drilling Corp Easting 2315719.9
DRILLING METHOD AND EQUIPMENT USED : Truck-mouned Rotosonic Drill Rig
WATER LEVELS : 9.01 START : 12/10/2004 END : 12/10/2004 LOGGER : D. Gates

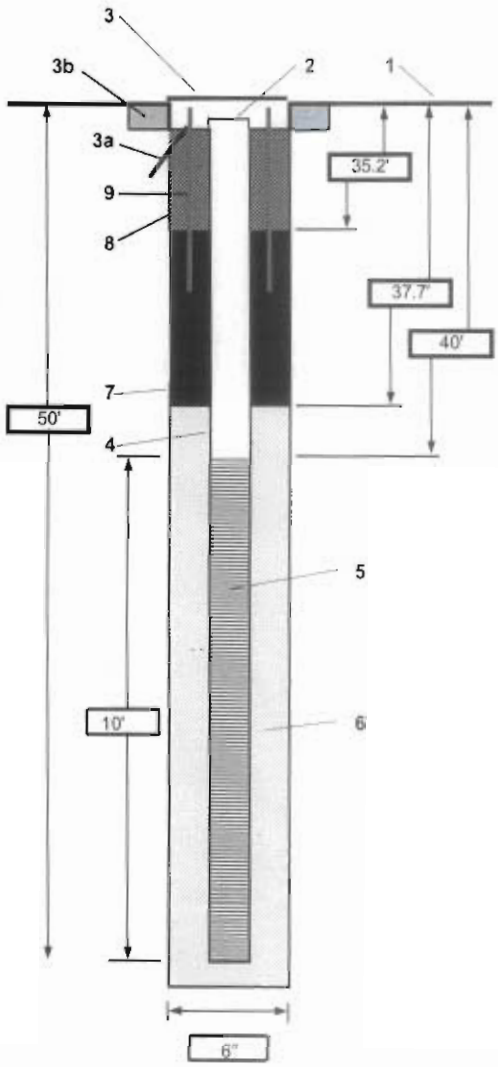

1- Ground elevation at well	Not obtained
2- Top of casing elevation	8.47
3- Wellhead protection cover type	Flush-mounted boltdown manhole
a) drain tube?	no
b) concrete pad dimensions	2' x 2' x 6"
4- Dia./type of well casing	2-inch Schedule 80 PVC
5- Type/slot size of screen	2-inch Schedule 80 PVC, 0.010" slot screen
6- Type screen filter	20/30 silica sand
a) Quantity used	3.5 (50 lb) bags of sand
7- Type of seal	3/8" barroid bentonite chips, hydrated
a) Quantity used	1/2 (50 lb) bucket
8- Grout	
a) Grout mix used	Type I Portland cement w/5% bentonite
b) Method of placement	Trimee from bottom of hole
c) Vol. of well casing grout	
9- CPVC sleeve	Not applicable
Development method	Surge block / submersable pump
Development time	23 minutes
Estimated purge volume	25 gallons

Comments Grout weight = >14lb/gallon
Total Depth (BTOC) = +/- 2.5 inches
Final field parameters collected during well development
pH = 6.08
conductivity = .228
temperature = 22.5
turbidity = 1.0

Note: Diagram not to scale.

CH2MHILL

PROJECT NUMBER	WELL NUMBER	
258814	A039GW049D	SHEET 1 OF 1

WELL COMPLETION DIAGRAM

PROJECT : Charleston Naval Complex, SWMU 39 LOCATION : Charleston, SC Northing 381231.5
DRILLING CONTRACTOR : Boart Longyear Drilling Corp Easting 2315702.4
DRILLING METHOD AND EQUIPMENT USED : Truck-mouned Rotosonic Drill Rig
WATER LEVELS : 11.23 START : 12/10/2004 END : 12/10/2004 LOGGER : D. Gates

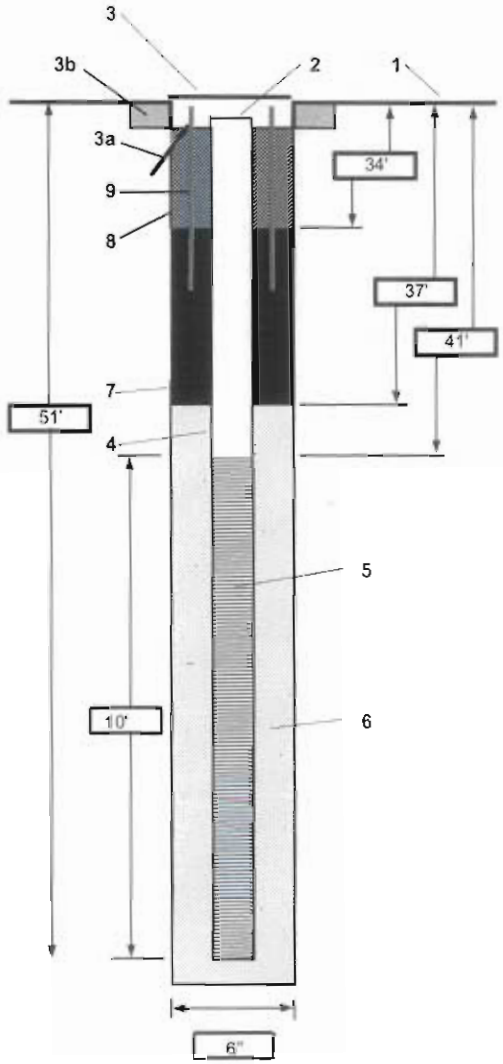

1- Ground elevation at well	Not obtained
2- Top of casing elevation	8.29
3- Wellhead protection cover type	Flush-mounted boltdown manhole
a) drain tube?	no
b) concrete pad dimensions	2' x 2' x 6"
4- Dia./type of well casing	2-inch Schedule 80 PVC
5- Type/slot size of screen	2-inch Schedule 80 PVC, 0.010" slot screen
6- Type screen filter	20/30 silica sand
a) Quantity used	3.5 (50 lb) bags of sand
7- Type of seal	3/8" barroid bentonite chips, hydrated
a) Quantity used	1/2 (50 lb) bucket
8- Grout	
a) Grout mix used	Type I Portland cement w/5% bentonite
b) Method of placement	Trimee from bottom of hole
c) Vol. of well casing grout	
9- CPVC sleeve	Not applicable
Development method	Surge block / submersable pump
Development time	25 minutes
Estimated purge volume	30 gallons

Comments Grout weight = >14lb/gallon
Total Depth (BTOC) = +/- 2.5 inches
Final field parameters collected during well development
pH = 6.15
conductivity = .246
temperature = 22.2
turbidity = 4.0

Note: Diagram not to scale.

D H E C

PROMOTE PROTECT PROSPER

Water Well Record
Bureau of Water
2600 Bull Street, Columbia, SC 29201-1708; (803) 898-4300

1. WELL OWNER INFORMATION:
Name: United States Navy (last) (first)
Address: 2155 Eagle Drive
City: North Charleston State: SC Zip:
Telephone: Work: (943) 820-5956 Home:

2. LOCATION OF WELL: CNC **COUNTY:** Charleston
Name: A039GW51I
Street Address: Charleston Naval Complex
City: North Charleston Zip:
Latitude: N: 381070.9 Longitude: E: 2315029.9

3. PUBLIC SYSTEM NAME: **PUBLIC SYSTEM NUMBER:**

4. ABANDONMENT: ☐ Yes ☑ No
Grouted Depth: from _____ ft. to _____ ft.

Formation Description	*Thickness of Stratum	Depth to Bottom of Stratum
Silty sands w/clay stringers	Surface	27.0 ft

*Indicate Water Bearing Zones
(Use a 2nd sheet if needed)

5. REMARKS:
Installed by Rotosonic.
Flush-mounted 2'x2' concrete pad

6. TYPE: ☐ Mud Rotary ☐ Jetted ☐ Bored ☐ Dug ☐ Air Rotary ☐ Driven ☐ Cable tool ☑ Other

7. PERMIT NUMBER: 538M1

8. USE: ☐ Residential ☐ Public Supply ☐ Process ☐ Irrigation ☐ Air Conditioning ☐ Emergency ☐ Test Well ☑ Monitor Well ☐ Replacement

9. WELL DEPTH (completed) Date Started: 1-11-2006
27.0 ft. Date Completed: 1-11-2006

10. CASING: ☑ Threaded ☐ Welded
Diam.: 2-inch
Type: ☑ PVC ☐ Galvanized ☐ Steel ☐ Other
2 in. to 22 ft. depth
_____ in. to _____ ft. depth
Height: Above ☐ Below ☐
Surface _____ ft.
Weight _____ lb./ft.
Drive Shoe? ☐ Yes ☐ No

11. SCREEN:
Type: PVC Diam.: 2-inch
Slot/Gauge: .010 circumslot Length: 5 ft
Set Between: 22 ft. and 27 ft.
_____ ft. and _____ ft.
NOTE: MULTIPLE SCREENS USE SECOND SHEET
Sieve Analysis ☐ Yes (please enclose) ☑ No

12. STATIC WATER LEVEL 3.55 ft. below land surface after 24 hours

13. PUMPING LEVEL Below Land Surface.
_____ ft. after _____ hrs. Pumping _____ G.P.M.
Pumping Test: ☐ Yes (please enclose) ☑ No
Yield: _____

14. WATER QUALITY
Chemical Analysis ☐ Yes ☑ No Bacterial Analysis ☐ Yes ☐ No
Please enclose lab results.

15. ARTIFICIAL FILTER (filter pack) ☐ Yes ☐ No
Installed from 20 ft. to 27 ft.
Effective size 20/30 Uniformity Coefficient _____

16. WELL GROUTED? ☑ Yes ☐ No
☐ Neat Cement ☐ Bentonite ☑ Bentonite/Cement ☐ Other _____
Depth: From surface ft. to 17.5 ft.

17. NEAREST SOURCE OF POSSIBLE CONTAMINATION: ____ ft. ____ direction
Type _____
Well Disinfected ☐ Yes ☑ No Type: _____ Amount: _____

18. PUMP: Date installed: _____ Not installed ☑
Mfr. Name: _____ Model No.: _____
H.P. _____ Volts _____ Length of drop pipe ___ ft. Capacity ___ gpm
TYPE: ☐ Submersible ☐ Jet (shallow) ☐ Turbine ☐ Jet (deep) ☐ Reciprocating ☐ Centrifugal

19. WELL DRILLER: Jimmy Hall, Jr **CERT. NO.:** 1398
Address: (Print) Level: A B C D (circle one) ☐ ☑ ☐ ☐
803-652-2705
Telephone No.: Fax No.:

20. WATER WELL DRILLER'S CERTIFICATION: This well was drilled under my direction and this report is true to the best of my knowledge and belief.

Signed: _____ Date: 1-11-2006
Well Driller

If D Level Driller, provide supervising driller's name:

DHEC 1903 (07/2003) COPY 1 MAIL TO: S.C. DEPARTMENT OF HEALTH AND ENVIRONMENTAL CONTROL (ADDRESS ABOVE)

DHEC
PROMOTE PROTECT PROSPER

Water Well Record
Bureau of Water
2600 Bull Street, Columbia, SC 29201-1708; (803) 898-4300

1. WELL OWNER INFORMATION:
Name: United States Navy (last) (first)
Address: 2155 Eagle Drive
City: North Charleston State: SC Zip:
Telephone: Work: (943) 820-5956 Home:

2. LOCATION OF WELL: CNC **COUNTY:** Charleston
Name: A039GW52I
Street Address: Charleston Naval Complex
City: North Charleston Zip:
Latitude: N: 381085.5 Longitude: E: 2315031.6

3. PUBLIC SYSTEM NAME: **PUBLIC SYSTEM NUMBER:**

4. ABANDONMENT: ☐ Yes ☑ No
Grouted Depth: from ______ ft. to ______ ft.

Formation Description	*Thickness of Stratum	Depth to Bottom of Stratum
Silty sands w/clay stringers	Surface	28.0 ft

*Indicate Water Bearing Zones
(Use a 2nd sheet if needed)

5. REMARKS:
Installed by Rotosonic.
Flush-mounted 2'x2' concrete pad

6. TYPE: ☐ Mud Rotary ☐ Jetted ☐ Bored ☐ Dug ☐ Air Rotary ☐ Driven ☐ Cable tool ☑ Other

7. PERMIT NUMBER: 538M1

8. USE:
☐ Residential ☐ Public Supply ☐ Process
☐ Irrigation ☐ Air Conditioning ☐ Emergency
☐ Test Well ☑ Monitor Well ☐ Replacement

9. WELL DEPTH (completed) 28.0 ft. Date Started: 1-11-2006 Date Completed: 1-11-2006

10. CASING: ☑ Threaded ☐ Welded
Diam.: 2-inch
Type: ☑ PVC ☐ Galvanized ☐ Steel ☐ Other
2 in. to 23 ft. depth
______ in. to ______ ft. depth
Height: Above ☐ Below ☐
Surface ______ ft.
Weight ______ lb./ft.
Drive Shoe? ☐ Yes ☐ No

11. SCREEN:
Type: PVC Diam.: 2-inch
Slot/Gauge: .010 circumslot Length: 5 ft
Set Between: 23 ft. and 28 ft. **NOTE: MULTIPLE SCREENS**
______ ft. and ______ ft. **USE SECOND SHEET**
Sieve Analysis ☐ Yes (please enclose) ☑ No

12. STATIC WATER LEVEL 3.51 ft. below land surface after 24 hours

13. PUMPING LEVEL Below Land Surface.
______ ft. after ______ hrs. Pumping ______ G.P.M.
Pumping Test: ☐ Yes (please enclose) ☑ No
Yield:

14. WATER QUALITY
Chemical Analysis ☐ Yes ☑ No Bacterial Analysis ☐ Yes ☐ No
Please enclose lab results.

15. ARTIFICIAL FILTER (filter pack) ☐ Yes ☐ No
Installed from 21 ft. to 28 ft.
Effective size 20/30 Uniformity Coefficient

16. WELL GROUTED? ☑ Yes ☐ No
☐ Neat Cement ☐ Bentonite ☑ Bentonite/Cement ☐ Other
Depth: From surface ft. to 18.5 ft.

17. NEAREST SOURCE OF POSSIBLE CONTAMINATION: ____ ft. ____ direction
Type
Well Disinfected ☐ Yes ☑ No Type: Amount:

18. PUMP: Date installed: Not installed ☑
Mfr. Name: Model No.:
H.P. ____ Volts ____ Length of drop pipe ____ ft. Capacity ____ gpm
TYPE: ☐ Submersible ☐ Jet (shallow) ☐ Turbine ☐ Jet (deep) ☐ Reciprocating ☐ Centrifugal

19. WELL DRILLER: Jimmy Hall, Jr **CERT. NO.:** 1398
Address: (Print) Level: A B C D (circle one) ☐ ☑ ☐ ☐
803-652-2705
Telephone No.: Fax No.:

20. WATER WELL DRILLER'S CERTIFICATION: This well was drilled under my direction and this report is true to the best of my knowledge and belief.

Signed: [signature] Well Driller Date: 1-11-2006

If D Level Driller, provide supervising driller's name:

D H E C
PROMOTE PROTECT PROSPER

Water Well Record
Bureau of Water
2600 Bull Street, Columbia, SC 29201-1708; (803) 898-4300

1. WELL OWNER INFORMATION:
Name: United States Navy (last) (first)
Address: 2155 Eagle Drive
City: North Charleston State: SC Zip:
Telephone: Work: (943) 820-5956 Home:

2. LOCATION OF WELL: CNC **COUNTY:** Charleston
Name: A039GW53I
Street Address: Charleston Naval Complex
City: North Charleston Zip:
Latitude: N: 381110.9 Longitude: E: 2315034.8

3. PUBLIC SYSTEM NAME: **PUBLIC SYSTEM NUMBER:**

4. ABANDONMENT: ☐ Yes ☑ No
Grouted Depth: from ____ ft. to ____ ft.

Formation Description	*Thickness of Stratum	Depth to Bottom of Stratum
Silty sands w/clay stringers	Surface	28.0 ft

*Indicate Water Bearing Zones
(Use a 2nd sheet if needed)

5. REMARKS:
Installed by Rotosonic.
Flush-mounted 2'x2" concrete pad

6. TYPE: ☐ Mud Rotary ☐ Jetted ☐ Bored ☐ Dug ☐ Air Rotary ☐ Driven ☐ Cable tool ☑ Other

7. PERMIT NUMBER: 538M1

8. USE:
☐ Residential ☐ Public Supply ☐ Process
☐ Irrigation ☐ Air Conditioning ☐ Emergency
☐ Test Well ☑ Monitor Well ☐ Replacement

9. WELL DEPTH (completed) 28.0 ft. Date Started: 1-11-2006 Date Completed: 1-11-2006

10. CASING: ☑ Threaded ☐ Welded
Diam.: 2-inch
Type: ☑ PVC ☐ Galvanized ☐ Steel ☐ Other
2 in. to 23 ft. depth
____ in. to ____ ft. depth
Height: Above ☐ Below ☐
Surface ____ ft.
Weight ____ lb./ft.
Drive Shoe? ☐ Yes ☐ No

11. SCREEN:
Type: PVC Diam.: 2-inch
Slot/Gauge: .010 circumslot Length: 5 ft
Set Between: 23 ft. and 28 ft. **NOTE: MULTIPLE SCREENS USE SECOND SHEET**
____ ft. and ____ ft.
Sieve Analysis ☐ Yes (please enclose) ☑ No

12. STATIC WATER LEVEL 3.39 ft. below land surface after 24 hours

13. PUMPING LEVEL Below Land Surface.
____ ft. after ____ hrs. Pumping ____ G.P.M.
Pumping Test: ☐ Yes (please enclose) ☑ No
Yield:

14. WATER QUALITY
Chemical Analysis ☐ Yes ☑ No Bacterial Analysis ☐ Yes ☐ No
Please enclose lab results.

15. ARTIFICIAL FILTER (filter pack) ☐ Yes ☐ No
Installed from 21 ft. to 28 ft.
Effective size 20/30 Uniformity Coefficient

16. WELL GROUTED? ☑ Yes ☐ No
☐ Neat Cement ☐ Bentonite ☑ Bentonite/Cement ☐ Other
Depth: From surface ft. to 18.5 ft.

17. NEAREST SOURCE OF POSSIBLE CONTAMINATION: ____ ft. ____ direction
Type
Well Disinfected ☐ Yes ☑ No Type: ____ Amount:

18. PUMP: Date installed: ____ Not installed ☑
Mfr. Name: ____ Model No.:
H.P. ____ Volts ____ Length of drop pipe ____ ft. Capacity ____ gpm
TYPE: ☐ Submersible ☐ Jet (shallow) ☐ Turbine ☐ Jet (deep) ☐ Reciprocating ☐ Centrifugal

19. WELL DRILLER: Jimmy Hall, Jr **CERT. NO.:** 1398
Address: (Print) Level: A B C D (circle one) ☐ ☑ ☐ ☐
803-652-2705
Telephone No.: Fax No.:

20. WATER WELL DRILLER'S CERTIFICATION: This well was drilled under my direction and this report is true to the best of my knowledge and belief.

Signed: [signature] Well Driller Date: 1-11-2006

If D Level Driller, provide supervising driller's name:

DHEC
PROMOTE PROTECT PROSPER

Water Well Record
Bureau of Water
2600 Bull Street, Columbia, SC 29201-1708; (803) 898-4300

1. WELL OWNER INFORMATION:
Name: United States Navy
(last) (first)
Address: 2155 Eagle Drive
City: North Charleston State: SC Zip:
Telephone: Work: (943) 820-5956 Home:

2. LOCATION OF WELL: CNC **COUNTY:** Charleston
Name: A039GW54I
Street Address: Charleston Naval Complex
City: North Charleston Zip:
Latitude: N: 381131.8 Longitude: E: 2315037.9

3. PUBLIC SYSTEM NAME: **PUBLIC SYSTEM NUMBER:**

4. ABANDONMENT: ☐ Yes ☑ No
Grouted Depth: from ______ ft. to ______ ft.

Formation Description	*Thickness of Stratum	Depth to Bottom of Stratum
Silty sands w/clay stringers	Surface	28.0 ft

*Indicate Water Bearing Zones
(Use a 2nd sheet if needed)

5. REMARKS:
Installed by Rotosonic.
Flush-mounted 2'x2' concrete pad

6. TYPE: ☐ Mud Rotary ☐ Jetted ☐ Bored ☐ Dug ☐ Air Rotary ☐ Driven ☐ Cable tool ☑ Other

7. PERMIT NUMBER: 538M1

8. USE: ☐ Residential ☐ Public Supply ☐ Process ☐ Irrigation ☐ Air Conditioning ☐ Emergency ☐ Test Well ☑ Monitor Well ☐ Replacement

9. WELL DEPTH (completed) 28.0 ft.
Date Started: 1-11-2006
Date Completed: 1-11-2006

10. CASING: ☑ Threaded ☐ Welded
Diam.: 2-inch
Type: ☑ PVC ☐ Galvanized ☐ Steel ☐ Other
2 in. to 23 ft. depth
______ in. to ______ ft. depth
Height: Above ☐ Below ☐
Surface ______ ft.
Weight ______ lb./ft.
Drive Shoe? ☐ Yes ☐ No

11. SCREEN:
Type: PVC Diam.: 2-inch
Slot/Gauge: .010 circumslot Length: 5 ft
Set Between: 23 ft. and 28 ft.
______ ft. and ______ ft.
NOTE: MULTIPLE SCREENS USE SECOND SHEET
Sieve Analysis ☐ Yes (please enclose) ☑ No

12. STATIC WATER LEVEL 3.39 ft. below land surface after 24 hours

13. PUMPING LEVEL Below Land Surface.
______ ft. after ______ hrs. Pumping ______ G.P.M.
Pumping Test: ☐ Yes (please enclose) ☑ No
Yield:

14. WATER QUALITY
Chemical Analysis ☐ Yes ☑ No Bacterial Analysis ☐ Yes ☐ No
Please enclose lab results.

15. ARTIFICIAL FILTER (filter pack) ☐ Yes ☐ No
Installed from 21 ft. to 28 ft.
Effective size 20/30 Uniformity Coefficient ______

16. WELL GROUTED? ☑ Yes ☐ No
☐ Neat Cement ☐ Bentonite ☑ Bentonite/Cement ☐ Other ______
Depth: From surface ft. to 18.5 ft.

17. NEAREST SOURCE OF POSSIBLE CONTAMINATION: ______ ft. ______ direction
Type ______
Well Disinfected ☐ Yes ☑ No Type: ______ Amount: ______

18. PUMP: Date installed: ______ Not installed ☑
Mfr. Name: ______ Model No.: ______
H.P. ______ Volts ______ Length of drop pipe ______ ft. Capacity ______ gpm
TYPE: ☐ Submersible ☐ Jet (shallow) ☐ Turbine ☐ Jet (deep) ☐ Reciprocating ☐ Centrifugal

19. WELL DRILLER: Jimmy Hall, Jr **CERT. NO.:** 1398
Address: (Print) Level: A B C D (circle one) ☐ ☑ ☐ ☐
803-652-2705
Telephone No.: Fax No.:

20. WATER WELL DRILLER'S CERTIFICATION: This well was drilled under my direction and this report is true to the best of my knowledge and belief.

Signed: [signature] Date: 1-11-2006
Well Driller

If D Level Driller, provide supervising driller's name:

COPY 1 MAIL TO: S.C. DEPARTMENT OF HEALTH AND ENVIRONMENTAL CONTROL (ADDRESS ABOVE)

DHEC
PROMOTE PROTECT PROSPER

Water Well Record
Bureau of Water
2600 Bull Street, Columbia, SC 29201-1708; (803) 898-4300

1. WELL OWNER INFORMATION:
Name: United States Navy (last) (first)
Address: 2155 Eagle Drive
City: North Charleston State: SC Zip:
Telephone: Work: (943) 820-5956 Home:

2. LOCATION OF WELL: CNC **COUNTY:** Charleston
Name: A039GW55I
Street Address: Charleston Naval Complex
City: North Charleston Zip:
Latitude: N: 381154.9 Longitude: E: 2315043.0

3. PUBLIC SYSTEM NAME: **PUBLIC SYSTEM NUMBER:**

4. ABANDONMENT: ☐ Yes ☑ No
Grouted Depth: from ______ ft. to ______ ft.

Formation Description	*Thickness of Stratum	Depth to Bottom of Stratum
Silty sands w/clay stringers	Surface	23.0 ft

*Indicate Water Bearing Zones
(Use a 2nd sheet if needed)

5. REMARKS:
Installed by Rotosonic.
Flush-mounted 2'x2' concrete pad

6. TYPE: ☐ Mud Rotary ☐ Jetted ☐ Bored ☐ Dug ☐ Air Rotary ☐ Driven ☐ Cable tool ☑ Other

7. PERMIT NUMBER: 538M1

8. USE:
☐ Residential ☐ Public Supply ☐ Process
☐ Irrigation ☐ Air Conditioning ☐ Emergency
☐ Test Well ☑ Monitor Well ☐ Replacement

9. WELL DEPTH (completed) Date Started: 1-11-2006
23.0 ft. Date Completed: 1-11-2006

10. CASING: ☑ Threaded ☐ Welded
Diam.: 2-inch
Type: ☑ PVC ☐ Galvanized ☐ Steel ☐ Other
2 in. to 18 ft. depth
______ in. to ______ ft. depth
Height: Above ☐ Below ☐
Surface ______ ft.
Weight ______ lb./ft.
Drive Shoe? ☐ Yes ☐ No

11. SCREEN:
Type: PVC Diam.: 2-inch
Slot/Gauge: .010 circumslot Length: 5 ft
Set Between: 18 ft. and 23 ft. **NOTE: MULTIPLE SCREENS**
______ ft. and ______ ft. **USE SECOND SHEET**
Sieve Analysis ☐ Yes (please enclose) ☑ No

12. STATIC WATER LEVEL 5.01 ft. below land surface after 24 hours

13. PUMPING LEVEL Below Land Surface.
______ ft. after ______ hrs. Pumping ______ G.P.M.
Pumping Test: ☐ Yes (please enclose) ☑ No
Yield:

14. WATER QUALITY
Chemical Analysis ☐ Yes ☑ No Bacterial Analysis ☐ Yes ☐ No
Please enclose lab results.

15. ARTIFICIAL FILTER (filter pack) ☐ Yes ☐ No
Installed from 16 ft. to 23 ft.
Effective size 20/30 Uniformity Coefficient ______

16. WELL GROUTED? ☑ Yes ☐ No
☐ Neat Cement ☐ Bentonite ☑ Bentonite/Cement ☐ Other ______
Depth: From surface ft. to 14 ft.

17. NEAREST SOURCE OF POSSIBLE CONTAMINATION: ______ ft. ______ direction
Type ______
Well Disinfected ☐ Yes ☑ No Type: ______ Amount: ______

18. PUMP: Date installed: ______ Not installed ☑
Mfr. Name: ______ Model No.: ______
H.P. ______ Volts ______ Length of drop pipe ______ ft. Capacity ______ gpm
TYPE: ☐ Submersible ☐ Jet (shallow) ☐ Turbine ☐ Jet (deep) ☐ Reciprocating ☐ Centrifugal

19. WELL DRILLER: Jimmy Hall, Jr **CERT. NO.:** 1398
Address: (Print) Level: A B C D (circle one) ☐ ☑ ☐ ☐
803-652-2705
Telephone No.: Fax No.:

20. WATER WELL DRILLER'S CERTIFICATION: This well was drilled under my direction and this report is true to the best of my knowledge and belief.

Signed: [signature] Well Driller Date: 1-11-2006

If D Level Driller, provide supervising driller's name:

COPY 1 MAIL TO: S.C. DEPARTMENT OF HEALTH AND ENVIRONMENTAL CONTROL (ADDRESS ABOVE)

DHEC
PROMOTE PROTECT PROSPER

Water Well Record
Bureau of Water
2600 Bull Street, Columbia, SC 29201-1708; (803) 898-4300

1. WELL OWNER INFORMATION:
Name: United States Navy
(last) (first)
Address: 2155 Eagle Drive
City: North Charleston State: SC Zip:
Telephone: Work: (943) 820-5956 Home:

2. LOCATION OF WELL: CNC **COUNTY:** Charleston
Name: A039GW56I
Street Address: Charleston Naval Complex
City: North Charleston Zip:
Latitude: N: 381182.8 Longitude: E: 2315047.1

3. PUBLIC SYSTEM NAME: **PUBLIC SYSTEM NUMBER:**

4. ABANDONMENT: ☐ Yes ☑ No
Grouted Depth: from ______ ft. to ______ ft.

Formation Description	*Thickness of Stratum	Depth to Bottom of Stratum
Silty sands w/clay stringers	Surface	28.0 ft

*Indicate Water Bearing Zones
(Use a 2nd sheet if needed)

5. REMARKS:
Installed by Rotosonic.
Flush-mounted 2'x2' concrete pad

6. TYPE: ☐ Mud Rotary ☐ Jetted ☐ Bored ☐ Dug ☐ Air Rotary ☐ Driven ☐ Cable tool ☑ Other

7. PERMIT NUMBER: 538M1

8. USE:
☐ Residential ☐ Public Supply ☐ Process
☐ Irrigation ☐ Air Conditioning ☐ Emergency
☐ Test Well ☑ Monitor Well ☐ Replacement

9. WELL DEPTH (completed) Date Started: 1-11-2006
28.0 ft. Date Completed: 1-11-2006

10. CASING: ☑ Threaded ☐ Welded
Diam.: 2-inch
Type: ☑ PVC ☐ Galvanized ☐ Steel ☐ Other
2 in. to 23 ft. depth
______ in. to ______ ft. depth
Height: Above ☐ Below ☐
Surface ______ ft.
Weight ______ lb./ft.
Drive Shoe? ☐ Yes ☐ No

11. SCREEN:
Type: PVC Diam.: 2-inch
Slot/Gauge: .010 circumslot Length: 5 ft
Set Between: 23 ft. and 28 ft. **NOTE: MULTIPLE SCREENS**
______ ft. and ______ ft. **USE SECOND SHEET**
Sieve Analysis ☐ Yes (please enclose) ☑ No

12. STATIC WATER LEVEL 3.39 ft. below land surface after 24 hours

13. PUMPING LEVEL Below Land Surface.
______ ft. after ______ hrs. Pumping ______ G.P.M.
Pumping Test: ☐ Yes (please enclose) ☑ No
Yield:

14. WATER QUALITY
Chemical Analysis ☐ Yes ☑ No Bacterial Analysis ☐ Yes ☐ No
Please enclose lab results.

15. ARTIFICIAL FILTER (filter pack) ☐ Yes ☐ No
Installed from 21 ft. to 28 ft.
Effective size 20/30 Uniformity Coefficient

16. WELL GROUTED? ☑ Yes ☐ No
☐ Neat Cement ☐ Bentonite ☑ Bentonite/Cement ☐ Other
Depth: From surface ft. to 18.5 ft.

17. NEAREST SOURCE OF POSSIBLE CONTAMINATION: ______ ft. ______ direction
Type
Well Disinfected ☐ Yes ☑ No Type: ______ Amount: ______

18. PUMP: Date installed: ______ Not installed ☑
Mfr. Name: ______ Model No.: ______
H.P. ______ Volts ______ Length of drop pipe ______ ft. Capacity ______ gpm
TYPE: ☐ Submersible ☐ Jet (shallow) ☐ Turbine ☐ Jet (deep) ☐ Reciprocating ☐ Centrifugal

19. WELL DRILLER: Jimmy Hall, Jr **CERT. NO.:** 1398
Address: (Print) Level A B C D (circle one) ☐ ☑ ☐ ☐
803-652-2705
Telephone No.: Fax No.:

20. WATER WELL DRILLER'S CERTIFICATION: This well was drilled under my direction and this report is true to the best of my knowledge and belief.

Signed: [signature] Date: 1-11-2006
Well Driller

If D Level Driller, provide supervising driller's name:

DHEC
PROMOTE PROTECT PROSPER

Water Well Record
Bureau of Water
2600 Bull Street, Columbia, SC 29201-1708; (803) 898-4300

1. WELL OWNER INFORMATION:
Name: United States Navy (last) (first)
Address: 2155 Eagle Drive
City: North Charleston State: SC Zip:
Telephone: Work: (943) 820-5956 Home:

2. LOCATION OF WELL: CNC **COUNTY:** Charleston
Name: A039GW57I
Street Address: Charleston Naval Complex
City: North Charleston Zip:
Latitude: N: 381211.1 Longitude: E: 2315049.8

3. PUBLIC SYSTEM NAME: **PUBLIC SYSTEM NUMBER:**

4. ABANDONMENT: ☐ Yes ☑ No
Grouted Depth: from ______ ft. to ______ ft.

Formation Description	*Thickness of Stratum	Depth to Bottom of Stratum
Silty sands w/clay stringers	Surface	28.0 ft

*Indicate Water Bearing Zones
(Use a 2nd sheet if needed)

5. REMARKS:
Installed by Rotosonic.
Flush-mounted 2'x2' concrete pad

6. TYPE: ☐ Mud Rotary ☐ Jetted ☐ Bored ☐ Dug ☐ Air Rotary ☐ Driven ☐ Cable tool ☑ Other

7. PERMIT NUMBER: 538M1

8. USE:
☐ Residential ☐ Public Supply ☐ Process
☐ Irrigation ☐ Air Conditioning ☐ Emergency
☐ Test Well ☑ Monitor Well ☐ Replacement

9. WELL DEPTH (completed) 28.0 ft. Date Started: 1-11-2006 Date Completed: 1-11-2006

10. CASING: ☑ Threaded ☐ Welded
Diam.: 2-inch
Type: ☑ PVC ☐ Galvanized ☐ Steel ☐ Other
2 in. to 23 ft. depth
______ in. to ______ ft. depth
Height: Above ☐ Below ☐
Surface ______ ft.
Weight ______ lb./ft.
Drive Shoe? ☐ Yes ☐ No

11. SCREEN:
Type: PVC Diam.: 2-inch
Slot/Gauge: .010 circumslot Length: 5 ft
Set Between: 23 ft. and 28 ft. ______ ft. and ______ ft.
NOTE: MULTIPLE SCREENS USE SECOND SHEET
Sieve Analysis ☐ Yes (please enclose) ☑ No

12. STATIC WATER LEVEL 4.44 ft. below land surface after 24 hours

13. PUMPING LEVEL Below Land Surface.
______ ft. after ______ hrs. Pumping ______ G.P.M.
Pumping Test: ☐ Yes (please enclose) ☑ No
Yield:

14. WATER QUALITY
Chemical Analysis ☐ Yes ☑ No Bacterial Analysis ☐ Yes ☐ No
Please enclose lab results.

15. ARTIFICIAL FILTER (filter pack) ☐ Yes ☐ No
Installed from 21 ft. to 28 ft.
Effective size 20/30 Uniformity Coefficient ______

16. WELL GROUTED? ☑ Yes ☐ No
☐ Neat Cement ☐ Bentonite ☑ Bentonite/Cement ☐ Other ______
Depth: From surface ft. to 18.5 ft.

17. NEAREST SOURCE OF POSSIBLE CONTAMINATION: ______ ft. ______ direction
Type ______
Well Disinfected ☐ Yes ☑ No Type: ______ Amount: ______

18. PUMP: Date installed: ______ Not installed ☑
Mfr. Name: ______ Model No.: ______
H.P. ______ Volts ______ Length of drop pipe ______ ft. Capacity ______ gpm
TYPE: ☐ Submersible ☐ Jet (shallow) ☐ Turbine ☐ Jet (deep) ☐ Reciprocating ☐ Centrifugal

19. WELL DRILLER: Jimmy Hall, Jr **CERT. NO.:** 1398
Address: (Print) Level: A B C D (circle one) ☐ ☑ ☐ ☐
803-652-2705
Telephone No.: Fax No.:

20. WATER WELL DRILLER'S CERTIFICATION: This well was drilled under my direction and this report is true to the best of my knowledge and belief.

Signed: [signature] Well Driller Date: 1-11-2006

If D Level Driller, provide supervising driller's name:

DHEC
PROMOTE PROTECT PROSPER

Water Well Record
Bureau of Water
2600 Bull Street, Columbia, SC 29201-1708; (803) 898-4300

1. WELL OWNER INFORMATION:
Name: United States Navy
(last) (first)
Address: 2155 Eagle Drive
City: North Charleston State: SC Zip:
Telephone: Work: (943) 820-5956 Home:

2. LOCATION OF WELL: CNC **COUNTY:** Charleston
Name: A039GW58I
Street Address: Charleston Naval Complex
City: North Charleston Zip:
Latitude: N: 381281.4 Longitude: E: 2315056.0

3. PUBLIC SYSTEM NAME: **PUBLIC SYSTEM NUMBER:**

4. ABANDONMENT: ☐ Yes ☑ No
Grouted Depth: from ____ ft. to ____ ft.

Formation Description	*Thickness of Stratum	Depth to Bottom of Stratum
Silty sands w/clay stringers	Surface	30.0 ft

*Indicate Water Bearing Zones
(Use a 2nd sheet if needed)

5. REMARKS:
Installed by Rotosonic.
Flush-mounted 2'x2' concrete pad

6. TYPE: ☐ Mud Rotary ☐ Jetted ☐ Bored ☐ Dug ☐ Air Rotary ☐ Driven ☐ Cable tool ☑ Other

7. PERMIT NUMBER: 538M1

8. USE:
☐ Residential ☐ Public Supply ☐ Process
☐ Irrigation ☐ Air Conditioning ☐ Emergency
☐ Test Well ☑ Monitor Well ☐ Replacement

9. WELL DEPTH (completed) Date Started: 1-12-2006
30.0 ft. Date Completed: 1-12-2006

10. CASING: ☑ Threaded ☐ Welded
Diam.: 2-inch
Type: ☑ PVC ☐ Galvanized ☐ Steel ☐ Other
2 in. to 25 ft. depth
____ in. to ____ ft. depth
Height: Above ☐ Below ☐
Surface ____ ft.
Weight ____ lb./ft.
Drive Shoe? ☐ Yes ☐ No

11. SCREEN:
Type: PVC Diam.: 2-inch
Slot/Gauge: .010 circumslot Length: 5 ft
Set Between: 25 ft. and 30 ft. **NOTE: MULTIPLE SCREENS**
____ ft. and ____ ft. **USE SECOND SHEET**
Sieve Analysis ☐ Yes (please enclose) ☑ No

12. STATIC WATER LEVEL 4.24 ft. below land surface after 24 hours

13. PUMPING LEVEL Below Land Surface.
____ ft. after ____ hrs. Pumping ____ G.P.M.
Pumping Test: ☐ Yes (please enclose) ☑ No
Yield:

14. WATER QUALITY
Chemical Analysis ☐ Yes ☑ No Bacterial Analysis ☐ Yes ☐ No
Please enclose lab results.

15. ARTIFICIAL FILTER (filter pack) ☐ Yes ☐ No
Installed from 23 ft. to 30 ft.
Effective size 20/30 Uniformity Coefficient ____

16. WELL GROUTED? ☑ Yes ☐ No
☐ Neat Cement ☐ Bentonite ☑ Bentonite/Cement ☐ Other ____
Depth: From surface ft. to 21 ft.

17. NEAREST SOURCE OF POSSIBLE CONTAMINATION: ____ ft. ____ direction
Type ____
Well Disinfected ☐ Yes ☑ No Type: ____ Amount: ____

18. PUMP: Date installed: ____ Not installed ☑
Mfr. Name: ____ Model No.: ____
H.P. ____ Volts ____ Length of drop pipe ____ ft. Capacity ____ gpm
TYPE: ☐ Submersible ☐ Jet (shallow) ☐ Turbine ☐ Jet (deep) ☐ Reciprocating ☐ Centrifugal

19. WELL DRILLER: Jimmy Hall, Jr **CERT. NO.:** 1398
Address: (Print) Level: A B C D (circle one) ☐ ☑ ☐ ☐
803-652-2705
Telephone No.: Fax No.:

20. WATER WELL DRILLER'S CERTIFICATION: This well was drilled under my direction and this report is true to the best of my knowledge and belief.

Signed: [signature] Well Driller Date: 1-12-2006

If D Level Driller, provide supervising driller's name:

COPY 1 MAIL TO: S.C. DEPARTMENT OF HEALTH AND ENVIRONMENTAL CONTROL (ADDRESS ABOVE)

D H E C
PROMOTE PROTECT PROSPER

Water Well Record
Bureau of Water
2600 Bull Street, Columbia, SC 29201-1708; (803) 898-4300

1. WELL OWNER INFORMATION:
Name: United States Navy
(last) (first)
Address: 2155 Eagle Drive
City: North Charleston State: SC Zip:
Telephone: Work: (943) 820-5956 Home:

2. LOCATION OF WELL: CNC **COUNTY:** Charleston
Name: A039GW59I
Street Address: Charleston Naval Complex
City: North Charleston Zip:
Latitude: N: 381271.5 Longitude: E: 2315055.1

3. PUBLIC SYSTEM NAME: **PUBLIC SYSTEM NUMBER:**

4. ABANDONMENT: ☐ Yes ☑ No
Grouted Depth: from ______ ft. to ______ ft.

Formation Description	*Thickness of Stratum	Depth to Bottom of Stratum
Silty sands w/clay stringers	Surface	28.0 ft

*Indicate Water Bearing Zones
(Use a 2nd sheet if needed)

5. REMARKS:
Installed by Rotosonic.
Flush-mounted 2'x2' concrete pad

6. TYPE: ☐ Mud Rotary ☐ Jetted ☐ Bored ☐ Dug ☐ Air Rotary ☐ Driven ☐ Cable tool ☑ Other

7. PERMIT NUMBER: 538MI

8. USE:
☐ Residential ☐ Public Supply ☐ Process
☐ Irrigation ☐ Air Conditioning ☐ Emergency
☐ Test Well ☑ Monitor Well ☐ Replacement

9. WELL DEPTH (completed) Date Started: 1-12-2006
28.0 ft. Date Completed: 1-12-2006

10. CASING: ☑ Threaded ☐ Welded
Diam.: 2-inch
Type: ☑ PVC ☐ Galvanized ☐ Steel ☐ Other
2 in. to 23 ft. depth
______ in. to ______ ft. depth
Height: Above ☐ Below ☐
Surface ______ ft.
Weight ______ lb./ft.
Drive Shoe? ☐ Yes ☐ No

11. SCREEN:
Type: PVC Diam.: 2-inch
Slot/Gauge: .010 circumslot Length: 5 ft
Set Between: 23 ft. and 28 ft. **NOTE: MULTIPLE SCREENS**
______ ft. and ______ ft. **USE SECOND SHEET**
Sieve Analysis ☐ Yes (please enclose) ☑ No

12. STATIC WATER LEVEL 4.44 ft. below land surface after 24 hours

13. PUMPING LEVEL Below Land Surface.
______ ft. after ______ hrs. Pumping ______ G.P.M.
Pumping Test: ☐ Yes (please enclose) ☑ No
Yield:

14. WATER QUALITY
Chemical Analysis ☐ Yes ☑ No Bacterial Analysis ☐ Yes ☐ No
Please enclose lab results.

15. ARTIFICIAL FILTER (filter pack) ☐ Yes ☐ No
Installed from 21 ft. to 28 ft.
Effective size 20/30 Uniformity Coefficient

16. WELL GROUTED? ☑ Yes ☐ No
☐ Neat Cement ☐ Bentonite ☑ Bentonite/Cement ☐ Other
Depth: From surface ft. to 18.5 ft.

17. NEAREST SOURCE OF POSSIBLE CONTAMINATION: ____ ft. ____ direction
Type
Well Disinfected ☐ Yes ☑ No Type: ______ Amount: ______

18. PUMP: Date installed: ______ Not installed ☑
Mfr. Name: ______ Model No.: ______
H.P. ______ Volts ______ Length of drop pipe ____ ft. Capacity ____ gpm
TYPE: ☐ Submersible ☐ Jet (shallow) ☐ Turbine
☐ Jet (deep) ☐ Reciprocating ☐ Centrifugal

19. WELL DRILLER: Jimmy Hall, Jr **CERT. NO.:** 1398
Address: (Print) Level: A B C D (circle one) ☐ ☑ ☐ ☐
803-652-2705
Telephone No.: Fax No.:

20. WATER WELL DRILLER'S CERTIFICATION: This well was drilled under my direction and this report is true to the best of my knowledge and belief.

Signed: [signature] Date: 1-12-2006
Well Driller

If D Level Driller, provide supervising driller's name:

D H E C

PROMOTE PROTECT PROSPER

Water Well Record
Bureau of Water
2600 Bull Street, Columbia, SC 29201-1708; (803) 898-4300

1. WELL OWNER INFORMATION:
Name: United States Navy (last) (first)
Address: 2155 Eagle Drive
City: North Charleston State: SC Zip:
Telephone: Work: (943) 820-5956 Home:

2. LOCATION OF WELL: CNC **COUNTY:** Charleston
Name: A039GW60I
Street Address: Charleston Naval Complex
City: North Charleston Zip:
Latitude: N: 381281.4 Longitude: E: 2315056.0

3. PUBLIC SYSTEM NAME: **PUBLIC SYSTEM NUMBER:**

4. ABANDONMENT: ☐ Yes ☑ No
Grouted Depth: from _____ ft. to _____ ft.

Formation Description	*Thickness of Stratum	Depth to Bottom of Stratum
Silty sands w/clay stringers	Surface	28.0 ft

*Indicate Water Bearing Zones
(Use a 2nd sheet if needed)

5. REMARKS:
Installed by Rotosonic.
Flush-mounted 2'x2' concrete pad

6. TYPE: ☐ Mud Rotary ☐ Jetted ☐ Bored ☐ Dug ☐ Air Rotary ☐ Driven ☐ Cable tool ☑ Other

7. PERMIT NUMBER: 538MI

8. USE:
☐ Residential ☐ Public Supply ☐ Process
☐ Irrigation ☐ Air Conditioning ☐ Emergency
☐ Test Well ☑ Monitor Well ☐ Replacement

9. WELL DEPTH (completed) Date Started: 1-12-2006
28.0 ft. Date Completed: 1-12-2006

10. CASING: ☑ Threaded ☐ Welded
Diam.: 2-inch
Type: ☑ PVC ☐ Galvanized ☐ Steel ☐ Other
2 in. to 23 ft. depth
_____ in. to _____ ft. depth
Height: Above ☐ Below ☐
Surface _____ ft.
Weight _____ lb./ft.
Drive Shoe? ☐ Yes ☐ No

11. SCREEN:
Type: PVC Diam.: 2-inch
Slot/Gauge: .010 circumslot Length: 5 ft
Set Between: 23 ft. and 28 ft.
_____ ft. and _____ ft.
NOTE: MULTIPLE SCREENS USE SECOND SHEET
Sieve Analysis ☐ Yes (please enclose) ☑ No

12. STATIC WATER LEVEL 4.44 ft. below land surface after 24 hours

13. PUMPING LEVEL Below Land Surface.
_____ ft. after _____ hrs. Pumping _____ G.P.M.
Pumping Test: ☐ Yes (please enclose) ☑ No
Yield: _____

14. WATER QUALITY
Chemical Analysis ☐ Yes ☑ No Bacterial Analysis ☐ Yes ☐ No
Please enclose lab results.

15. ARTIFICIAL FILTER (filter pack) ☐ Yes ☐ No
Installed from 21 ft. to 28 ft.
Effective size 20/30 Uniformity Coefficient _____

16. WELL GROUTED? ☑ Yes ☐ No
☐ Neat Cement ☐ Bentonite ☑ Bentonite/Cement ☐ Other _____
Depth: From surface ft. to 18.5 ft.

17. NEAREST SOURCE OF POSSIBLE CONTAMINATION: _____ ft. _____ direction
Type _____
Well Disinfected ☐ Yes ☑ No Type: _____ Amount: _____

18. PUMP: Date installed: _____ Not installed ☑
Mfr. Name: _____ Model No.: _____
H.P. _____ Volts _____ Length of drop pipe ___ ft. Capacity ___ gpm
TYPE: ☐ Submersible ☐ Jet (shallow) ☐ Turbine ☐ Jet (deep) ☐ Reciprocating ☐ Centrifugal

19. WELL DRILLER: Jimmy Hall, Jr **CERT. NO.:** 1398
Address: (Print) Level: A B C D (circle one) ☐ ☑ ☐ ☐
803-652-2705
Telephone No.: Fax No.:

20. WATER WELL DRILLER'S CERTIFICATION: This well was drilled under my direction and this report is true to the best of my knowledge and belief.

Signed: _____ Date: 1-12-2006
Well Driller

If D Level Driller, provide supervising driller's name:

COPY 1 MAIL TO: S.C. DEPARTMENT OF HEALTH AND ENVIRONMENTAL CONTROL (ADDRESS ABOVE)

DHEC

PROMOTE PROTECT PROSPER

Water Well Record
Bureau of Water
2600 Bull Street, Columbia, SC 29201-1708; (803) 734-5300

1. LOCATION OF WELL:

County: CHARLESTON System Name:

Latitude: Longitude:

Distance and Direction from Road Intersections:

Street Address & City of Well Location:

Sketch Map:

2. CUTTING SAMPLES: ☐ Yes ☐ No

Geophysical Logs: ☐ Yes (please enclose) ☐ No

Formation Description	*Thickness of Stratum	Depth to Bottom of Stratum
*Note Water Bearing Zones (Use a 2nd sheet if needed)		

3. REMARKS:

4. OWNER OF WELL:
Address: 1130 RUTLEDGE CHARLESTON SC 29405
Telephone No.: 843-849-5700

Engineer:
Address: 1 PARK LANE NAVARRE FL 32566
Telephone No.: 850-939-5700

5. WELL DEPTH (completed) 47 ft. Date Started: 12/18/09 Date Completed: 12/18/09

6. ☐ Mud Rotary ☐ Jetted ☐ Bored ☐ Dug ☐ Air Rotary ☐ Driven ☐ Cable tool ☐ Other

7. USE: ☐ Domestic ☐ Public Supply–Permit No. _____ ☐ Industry ☐ Irrigation ☐ Air Conditioning ☐ Commercial ☐ Test Well ☐ Monitor Well ☐ _____

8. CASING: ☐ Threaded ☐ Welded
Diam.: _____
Type: ☐ PVC ☐ Galvanized ☐ Steel ☐ Other
_____ in. to 47 ft. depth
_____ in. to _____ ft. depth
Height: Above/Below Surface _____ ft.
Weight _____ lb./ft.
Drive Shoe? ☐ Yes ☐ No

9. SCREEN
Type: PVC 80 PVC Diam.: 2
Slot/Gauge: 0.010 Length: 10
Set Between: 37 ft. and 47 ft.
_____ ft. and _____ ft.
NOTE: MULTIPLE SCREENS USE SECOND SHEET
Sieve Analysis ☐ Yes (please enclose) ☐ No

10. STATIC WATER LEVEL
5 ft. below land surface after 24 hours

11. PUMPING LEVEL Below Land Surface.
_____ ft. after _____ hrs. Pumping _____ G.P.M.
Pumping Test: ☐ Yes (please enclose) ☐ No
Yield: _____

12. WATER QUALITY
Chemical Analysis ☐ Yes ☐ No Bacterial Analysis ☐ Yes ☐ No
Please enclose lab results.

13. ARTIFICIAL FILTER (gravel pack) ☐ Yes ☐ No
Installed from 37 ft. to 47 ft.
Effective size _____ Uniformity Coefficient _____

14. WELL GROUTED? ☐ Yes ☐ No
☐ Neat Cement ☐ Sand Cement ☐ Concrete ☐ Other _____
Depth: From 32 ft. to _____ ft.

15. NEAREST SOURCE OF POSSIBLE CONTAMINATION: _____ ft. _____ direction
_____ Type well disinfected upon completion ☐ Yes ☐ No Type: _____ Amount: _____

16. PUMP: Date installed: _____ Not installed ☐
Mfr. Name: _____ Model No.: _____
H.P. _____ Volts _____ Length of drop pipe ___ ft. Capacity ___ gpm
TYPE: ☐ Submersible ☐ Jet (shallow) ☐ Turbine ☐ Jet (deep) ☐ Reciprocating ☐ Centrifugal

17. WATER WELL CONTRACTOR'S CERTIFICATION: This well was drilled under my direction and this report is true to the best of my knowledge and belief.

Registered Business Name: [illegible] Date: [illegible]
Address: [illegible]
Signed: [illegible] Cert. No.: [illegible]
Licensed Representative

D H E C

PROMOTE PROTECT PROSPER

Water Well Record
Bureau of Water

2600 Bull Street, Columbia, SC 29201-1708; (803) 734-5300

1. LOCATION OF WELL:

County: CHARLESTON System Name:

Latitude: Longitude:

Distance and Direction from Road Intersections: 315' East of Ave Branch 13' South of Service Rd

Street Address & City of Well Location: Ave Branch Charleston

Sketch Map:

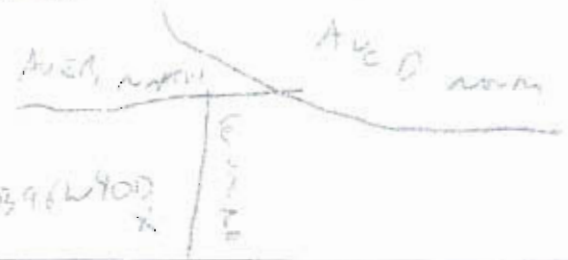

2. CUTTING SAMPLES: ☐ Yes ☐ No

Geophysical Logs: ☐ Yes (please enclose) ☑ No

Formation Description	*Thickness of Stratum	Depth to Bottom of Stratum
LT Brown organic silty sand	1	1
LT Brown organic sand with trace shell	5	6
LT Brown/gray silty sand	3	9
LT Green silty sandy clay	6	15
LT Brown silty sand	31	46
Pale Blue/Green clay	4	50
*Indicate Water Bearing Zones (Use a 2nd sheet if needed)		

3. REMARKS: Permit Rev 2 Screen 35-40 BLS + 34-35.5

4. OWNER OF WELL: US NAVY
Address: 1330 Kilo Street Charleston SC 29401
Telephone No.: 843-743-7200

Engineer: Chas M Hill
Address: 1266 Sea Lark Lane Navarre, FL 32566
Telephone No.: 850-937-8300

5. WELL DEPTH (completed): 46 ft. Date Started: 12/7/04 Date Completed: 12/8/04

6. ☐ Mud Rotary ☐ Jetted ☐ Bored ☐ Dug ☐ Air Rotary ☐ Driven ☐ Cable tool ☑ Other Static

7. USE: ☐ Domestic ☐ Public Supply–Permit No. ____ ☐ Industry ☐ Irrigation ☐ Air Conditioning ☐ Commercial ☐ Test Well ☑ Monitor Well ☐ ____

8. CASING: ☑ Threaded ☐ Welded
Diam.: 2"
Type: ☐ PVC ☐ Galvanized ☐ Steel ☐ Other
0 in. to 36 ft. depth
____ in. to ____ ft. depth
Height: Above/Below Surface ____ ft.
Weight ____ lb./ft.
Drive Shoe? ☐ Yes ☐ No

9. SCREEN
Type: Wood Pulp Diam.: 2"
Slot/Gauge: 0.010" Length: 10'
Set Between: 36 ft. and 46 ft.
____ ft. and ____ ft.
NOTE: MULTIPLE SCREENS USE SECOND SHEET
Sieve Analysis ☐ Yes (please enclose) ☑ No

10. STATIC WATER LEVEL
5 ft. below land surface after 24 hours

11. PUMPING LEVEL Below Land Surface.
____ ft. after ____ hrs. Pumping ____ G.P.M.
Pumping Test: ☐ Yes (please enclose) ☑ No
Yield: ____

12. WATER QUALITY
Chemical Analysis ☐ Yes ☐ No Bacterial Analysis ☐ Yes ☑ No
Please enclose lab results.

13. ARTIFICIAL FILTER (gravel pack) ☑ Yes ☐ No
Installed from 17 ft. to 34 ft.
Effective size ____ Uniformity Coefficient ____

14. WELL GROUTED? ☑ Yes ☐ No
☐ Neat Cement ☐ Sand Cement ☐ Concrete ☑ Other CB
Depth: From 31.5 ft. to 7 ft.

15. NEAREST SOURCE OF POSSIBLE CONTAMINATION: 16 ft. N direction
____ Type well disinfected upon completion ☐ Yes ☑ No Type: ____ Amount: ____

16. PUMP: Date installed: ____ Not installed ☑
Mfr. Name: ____ Model No.: ____
H.P. ____ Volts ____ Length of drop pipe ____ ft. Capacity ____ gpm
TYPE: ☐ Submersible ☐ Jet (shallow) ☐ Turbine ☐ Jet (deep) ☐ Reciprocating ☐ Centrifugal

17. WATER WELL CONTRACTOR'S CERTIFICATION: This well was drilled under my direction and this report is true to the best of my knowledge and belief.

Registered Business Name: [illegible] Date: 12/9/04
Address: 7332 [illegible] Place Charlotte NC
Signed: ____ Cert. No.: B0168
Authorized Representative

DHEC — PROMOTE PROTECT PROSPER

Water Well Record
Bureau of Water
2600 Bull Street, Columbia, SC 29201-1708; (803) 734-5300

1. LOCATION OF WELL:
County: Charleston System Name:
Latitude: Longitude:
Distance and Direction from Road Intersections: [illegible]
Street Address & City of Well Location: Ave B North, Charleston
Sketch Map: [illegible]

2. CUTTING SAMPLES: ☐ Yes ☒ No
Geophysical Logs: ☐ Yes (please enclose) ☒ No

Formation Description	*Thickness of Stratum	Depth to Bottom of Stratum
[illegible]	1	1
[illegible]	5	6
[illegible]	[illegible]	9
[illegible]	6	15
[illegible]	31	46
[illegible]	4	50
*Indicate Water Bearing Zones (Use a 2nd sheet if needed)		

3. REMARKS: [illegible]

4. OWNER OF WELL: US NAVY
Address: [illegible] Charleston SC 29405
Telephone No.: [illegible]
Engineer: CH2M Hill
Address: 1765 Sea Lark Lane, Navarre FL 32566
Telephone No.: [illegible]

5. WELL DEPTH (completed) 46 ft. Date Started: 12/7/04 Date Completed: 12/7/04

6. ☐ Mud Rotary ☐ Jetted ☐ Bored ☐ Dug ☐ Air Rotary ☐ Driven ☐ Cable tool ☒ Other [illegible]

7. USE: ☐ Domestic ☐ Public Supply–Permit No. ____ ☐ Industry ☐ Irrigation ☐ Air Conditioning ☐ Commercial ☐ Test Well ☒ Monitor Well ☐ ____

8. CASING: ☒ Threaded ☐ Welded
Diam.: 2"
Type: ☒ PVC ☐ Galvanized ☐ Steel ☐ Other
2 in. to 36 ft. depth
____ in. to ____ ft. depth
Height: Above/Below Surface ____ ft.
Weight ____ lb./ft.
Drive Shoe? ☐ Yes ☐ No

9. SCREEN
Type: Sch 80 PVC Diam.: 2"
Slot/Gauge: 0.010 Length: 10'
Set Between: 36 ft. and 46 ft. **NOTE: MULTIPLE SCREENS**
____ ft. and ____ ft. **USE SECOND SHEET**
Sieve Analysis ☐ Yes (please enclose) ☒ No

10. STATIC WATER LEVEL
____ ft. below land surface after 24 hours

11. PUMPING LEVEL Below Land Surface.
____ ft. after ____ hrs. Pumping ____ G.P.M.
Pumping Test: ☐ Yes (please enclose) ☒ No
Yield:

12. WATER QUALITY
Chemical Analysis ☐ Yes ☒ No Bacterial Analysis ☐ Yes ☐ No
Please enclose lab results.

13. ARTIFICIAL FILTER (gravel pack) ☒ Yes ☐ No
Installed from 33 ft. to [illegible] ft.
Effective size [illegible] Uniformity Coefficient [illegible]

14. WELL GROUTED? ☒ Yes ☐ No
☐ Neat Cement ☐ Sand Cement ☐ Concrete ☐ Other [illegible]
Depth: From [illegible] ft. to 1 ft.

15. NEAREST SOURCE OF POSSIBLE CONTAMINATION: [illegible] ft. [illegible] direction
____ Type well disinfected ☐ Yes Type:
upon completion ☒ No Amount:

16. PUMP: Date installed: ____ Not installed ☒
Mfr. Name: ____ Model No.: ____
H.P. ____ Volts ____ Length of drop pipe ____ ft. Capacity ____ gpm
TYPE: ☐ Submersible ☐ Jet (shallow) ☐ Turbine ☐ Jet (deep) ☐ Reciprocating ☐ Centrifugal

17. WATER WELL CONTRACTOR'S CERTIFICATION: This well was drilled under my direction and this report is true to the best of my knowledge and belief.
Registered Business Name: [illegible] Date: 12/[illegible]
Address: [illegible]
Signed: [signature] Cert. No.: B0168
Authorized Representative

DHEC
PROMOTE PROTECT PROSPER

Water Well Record
Bureau of Water
2600 Bull Street, Columbia, SC 29201-1708; (803) 734-5300

1. LOCATION OF WELL:

County: CHARLESTON System Name:

Latitude: Longitude:

Distance and Direction from Road Intersections: [illegible]

Street Address & City of Well Location: [illegible] Charleston

Sketch Map:

2. CUTTING SAMPLES: ☐ Yes ☐ No

Geophysical Logs: ☐ Yes (please enclose) ☐ No

Formation Description	*Thickness of Stratum	Depth to Bottom of Stratum
[illegible]	1	1
[illegible]	13 *	14
[illegible]	33 *	47
[illegible]	1	48
[illegible] GREEN [illegible]	1 *	49
[illegible] CLAY	1	50
*Indicate Water Bearing Zones (Use a 2nd sheet if needed)		

3. REMARKS: [illegible]

4. OWNER OF WELL: US NAVY

Address: 1930 [illegible] Street, CHARLESTON SC 29405

Telephone No.: 843 [illegible]

Engineer: [illegible]

Address: 1364 SEA LARA LANE, NAVARRE FL 32566

Telephone No.: 850 933 8200

5. WELL DEPTH (completed) 49 ft.

Date Started: 12/7/04

Date Completed: 12/7/04

6. ☐ Mud Rotary ☐ Jetted ☐ Bored ☐ Dug ☐ Air Rotary ☐ Driven ☐ Cable tool ☒ Other [illegible]

7. USE: ☐ Domestic ☐ Public Supply–Permit No. ______ ☐ Industry ☐ Irrigation ☐ Air Conditioning ☐ Commercial ☐ Test Well ☒ Monitor Well ☐ ______

8. CASING: ☒ Threaded ☐ Welded

Diam.: 2"

Type: ☒ PVC ☐ Galvanized ☐ Steel ☐ Other

2 in. to 39 ft. depth

______ in. to ______ ft. depth

Height: Above/Below Surface ______ ft.

Weight ______ lb./ft.

Drive Shoe? ☐ Yes ☐ No

9. SCREEN

Type: [illegible] PVC Diam.: 2"

Slot/Gauge: 0.010 Length: 10'

Set Between: 49 ft. and 39 ft. **NOTE: MULTIPLE SCREENS**

______ ft. and ______ ft. **USE SECOND SHEET**

Sieve Analysis ☐ Yes (please enclose) ☒ No

10. STATIC WATER LEVEL

5 ft. below land surface after 24 hours

11. PUMPING LEVEL Below Land Surface.

______ ft. after ______ hrs. Pumping ______ G.P.M.

Pumping Test: ☐ Yes (please enclose) ☒ No

Yield:

12. WATER QUALITY

Chemical Analysis ☐ Yes ☒ No Bacterial Analysis ☐ Yes ☒ No

Please enclose lab results.

13. ARTIFICIAL FILTER (gravel pack) ☐ Yes ☐ No

Installed from 49 ft. to 37 ft.

Effective size #1 Uniformity Coefficient [illegible]

14. WELL GROUTED? ☒ Yes ☐ No

☐ Neat Cement ☐ Sand Cement ☐ Concrete ☐ Other [illegible]

Depth: From 34.5 ft. to 1 ft.

15. NEAREST SOURCE OF POSSIBLE CONTAMINATION: ______ ft. ______ direction

______ Type well disinfected upon completion ☐ Yes ☒ No Type: ______ Amount: ______

16. PUMP: Date installed: ______ Not installed ☐

Mfr. Name: ______ Model No.: ______

H.P. ______ Volts ______ Length of drop pipe ___ ft. Capacity ___ gpm

TYPE: ☐ Submersible ☐ Jet (shallow) ☐ Turbine ☐ Jet (deep) ☐ Reciprocating ☐ Centrifugal

17. WATER WELL CONTRACTOR'S CERTIFICATION: This well was drilled under my direction and this report is true to the best of my knowledge and belief.

Registered Business Name: [illegible] Date: 12/8/04

Address: [illegible] Charlotte NC

Signed: [illegible] Cert. No.: B01683

DHEC

PROMOTE PROTECT PROSPER

Water Well Record
Bureau of Water
2600 Bull Street, Columbia, SC 29201-1708; (803) 734-5300

1. LOCATION OF WELL:

County: CHARLESTON System Name:

Latitude: Longitude:

Distance and Direction from Road Intersections: [illegible]

Street Address & City of Well Location: CHARLESTON

Sketch Map:

2. CUTTING SAMPLES: ☑ Yes ☐ No

Geophysical Logs: ☐ Yes (please enclose) ☑ No

Formation Description	*Thickness of Stratum	Depth to Bottom of Stratum
LT BROWN SILT	1	1
LT BROWN SANDY CLAY	18	19
LT BROWN SAND W/ [illegible]	27	46
LT BROWN SILTY CLAY	1	47
BROWN SAND SOME CLAY	2	49
BROWN CLAY	1	50
*Indicate Water Bearing Zones		

(Use a 2nd sheet if needed)

3. REMARKS: Bentonite plug [illegible] 22.5'-23.5'

4. OWNER OF WELL: US NAVY

Address: 1370 HOLLO STREET CHARLESTON SC 29405

Telephone No.: 843 939 5300

Engineer: C. SMITH

Address: 1766 SEA CLARK LANE NAVARRE, FL 32566

Telephone No.: 850 939 8300

5. WELL DEPTH (completed) 49 ft. Date Started: 12/7/09 Date Completed: 12/7/09

6. ☐ Mud Rotary ☐ Jetted ☐ Bored ☐ Dug ☐ Air Rotary ☐ Driven ☐ Cable tool ☑ Other SONIC

7. USE: ☐ Domestic ☐ Public Supply–Permit No. ____ ☐ Industry ☐ Irrigation ☐ Air Conditioning ☐ Commercial ☐ Test Well ☑ Monitor Well ☐ ____

8. CASING: ☐ Threaded ☐ Welded

Diam.: 2

Type: ☑ PVC ☐ Galvanized ☐ Steel ☐ Other

2 in. to 39 ft. depth

____ in. to ____ ft. depth

Height: Above/Below Surface ____ ft.

Weight ____ lb./ft.

Drive Shoe? ☐ Yes ☐ No

9. SCREEN

Type: SCH 40 PVC Diam.: 2

Slot/Gauge: 0.010 Length: 10'

Set Between: 39 ft. and 49 ft.

____ ft. and ____ ft.

NOTE: MULTIPLE SCREENS USE SECOND SHEET

Sieve Analysis ☐ Yes (please enclose) ☑ No

10. STATIC WATER LEVEL

____ ft. below land surface after 24 hours

11. PUMPING LEVEL Below Land Surface.

____ ft. after ____ hrs. Pumping ____ G.P.M.

Pumping Test: ☐ Yes (please enclose) ☑ No

Yield: ____

12. WATER QUALITY

Chemical Analysis ☐ Yes ☑ No Bacterial Analysis ☐ Yes ☑ No

Please enclose lab results.

13. ARTIFICIAL FILTER (gravel pack) ☐ Yes ☐ No

Installed from 36.5 ft. to 49 ft.

Effective size ____ Uniformity Coefficient ____

14. WELL GROUTED? ☑ Yes ☐ No

☐ Neat Cement ☐ Sand Cement ☐ Concrete ☑ Other CLAY

Depth: From 33.5 ft. to 1 ft.

15. *NEAREST SOURCE OF POSSIBLE CONTAMINATION:* ____ ft. ____ direction

____ Type well disinfected ☐ Yes Type: ____

upon completion ☑ No Amount: ____

16. PUMP: Date installed: ____ Not installed ☐

Mfr. Name: ____ Model No.: ____

H.P. ____ Volts ____ Length of drop pipe ____ ft. Capacity ____ gpm

TYPE: ☐ Submersible ☐ Jet (shallow) ☐ Turbine ☐ Jet (deep) ☐ Reciprocating ☐ Centrifugal

17. WATER WELL CONTRACTOR'S CERTIFICATION: This well was drilled under my direction and this report is true to the best of my knowledge and belief.

Registered Business Name: [illegible] Date: 12/8/09

Address: [illegible] Charleston SC

Signed: ____ Cert. No.: B0168[illegible]

DHEC
PROMOTE PROTECT PROSPER

Water Well Record
Bureau of Water
2600 Bull Street, Columbia, SC 29201-1708; (803) 734-5300

1. LOCATION OF WELL:

County: CHARLESTON System Name:

Latitude: Longitude:

Distance and Direction from Road Intersections: 165' EAST OF AVE B NORTH 45' SOUTH OF SEWOLE ROAD

Street Address & City of Well Location: AVE B NORTH CHARLESTON

Sketch Map:

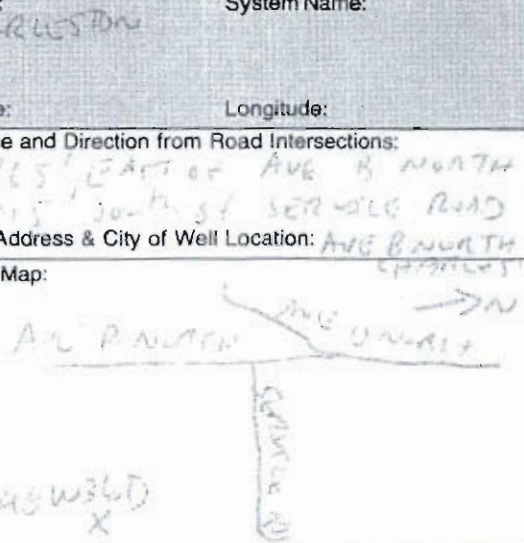

2. CUTTING SAMPLES: ☐ Yes ☐ No

Geophysical Logs: ☐ Yes (please enclose) ☐ No

Formation Description	*Thickness of Stratum	Depth to Bottom of Stratum
LT BROWN SILT	1	1
LT BROWN/BROWN CLAYEY SILT	18*	19
LT BROWN SILTY CLAY	25*	44
BLACK/BROWN SILTY CLAY	1.5	45.5
BLACK/BROWN SAND & GRAVEL (WET)	1.5*	47
LT BROWN CLAY	47*	52
*Indicate Water Bearing Zones (Use a 2nd sheet if needed)		

3. REMARKS: Bentonite PLUG (Sealed) 34-32' BGS

4. OWNER OF WELL: US NAVY
Address: 1330 KING STREET CHARLESTON SC 29405
Telephone No.: 843.739.8300

Engineer: CLYDE HILL
Address: 1766 SEA LARK LANE NAVARRE, FL 32566
Telephone No.: 850.933.8200

5. WELL DEPTH (completed) 47 ft. Date Started: 12/7/04 Date Completed: 12/7/04

6. ☐ Mud Rotary ☐ Jetted ☐ Bored ☐ Dug ☐ Air Rotary ☐ Driven ☐ Cable tool ☒ Other Sonic

7. USE: ☐ Domestic ☐ Public Supply–Permit No. ____ ☐ Industry ☐ Irrigation ☐ Air Conditioning ☐ Commercial ☐ Test Well ☒ Monitor Well ☐ ____

8. CASING: ☐ Threaded ☐ Welded
Diam.: 2"
Type: ☒ PVC ☐ Galvanized ☐ Steel ☐ Other
2 in. to 22 ft. depth
____ in. to ____ ft. depth
Height: Above/Below Surface ____ ft.
Weight ____ lb./ft.
Drive Shoe? ☐ Yes ☐ No

9. SCREEN
Type: SCH 80 Diam.: 2"
Slot/Gauge: 0.010" Length: 10'
Set Between: 22 ft. and 32 ft.
____ ft. and ____ ft.
NOTE: MULTIPLE SCREENS USE SECOND SHEET
Sieve Analysis ☐ Yes (please enclose) ☒ No

10. STATIC WATER LEVEL
5 ft. below land surface after 24 hours

11. PUMPING LEVEL Below Land Surface.
____ ft. after ____ hrs. Pumping ____ G.P.M.
Pumping Test: ☐ Yes (please enclose) ☒ No
Yield: ____

12. WATER QUALITY
Chemical Analysis ☐ Yes ☒ No Bacterial Analysis ☐ Yes ☐ No
Please enclose lab results.

13. ARTIFICIAL FILTER (gravel pack) ☒ Yes ☐ No
Installed from 47 ft. to 24 ft.
Effective size #1 Uniformity Coefficient ____

14. WELL GROUTED? ☒ Yes ☐ No
☐ Neat Cement ☐ Sand Cement ☐ Concrete ☒ Other C/B
Depth: From 32 ft. to ____ ft.

15. NEAREST SOURCE OF POSSIBLE CONTAMINATION: 10 ft. N direction
____ Type well disinfected upon completion ☐ Yes ☒ No Type: ____ Amount: ____

16. PUMP: Date installed: ____ Not installed ☒
Mfr. Name: ____ Model No.: ____
H.P. ____ Volts ____ Length of drop pipe ____ ft. Capacity ____ gpm
TYPE: ☐ Submersible ☐ Jet (shallow) ☐ Turbine ☐ Jet (deep) ☐ Reciprocating ☐ Centrifugal

17. WATER WELL CONTRACTOR'S CERTIFICATION: This well was drilled under my direction and this report is true to the best of my knowledge and belief.

Registered Business Name: [illegible] Date: [illegible]
Address: [illegible] Charlotte NC
Signed: ____ Cert. No. B0167[illegible]

D H E C

PROMOTE PROTECT PROSPER

Water Well Record
Bureau of Water
2600 Bull Street, Columbia, SC 29201-1708; (803) 734-5300

1. LOCATION OF WELL:

County: CHARLESTON System Name:

Latitude: Longitude:

Distance and Direction from Road Intersections: [illegible] EAST OF AVE B NORTH [illegible]

Street Address & City of Well Location: [illegible]

Sketch Map:

2. CUTTING SAMPLES: ☒ Yes ☐ No

Geophysical Logs: ☐ Yes (please enclose) ☐ No

Formation Description	*Thickness of Stratum	Depth to Bottom of Stratum
LT BROWN SILT	[illegible]	[illegible]
LT BROWN BROWN SILT	[illegible]	[illegible]
LT BROWN [illegible]	[illegible]	[illegible]
[illegible] CLAY	[illegible]	[illegible]
[illegible]	[illegible]	[illegible]
LT BROWN CLAY	[illegible]	[illegible]
*[illegible]e Water Bearing Zones (Use a 2nd sheet if needed)		

3. REMARKS: [illegible]

4. OWNER OF WELL: US NAVY

Address: 1330 KIEL STREET CHARLESTON, SC 29405

Telephone No.: 843 740 7032

Engineer: CH2M HILL

Address: 1760 SEA LARK LANE NAVARRE, FL 32566

Telephone No.: 850 939 7300

5. WELL DEPTH (completed) 47 ft. Date Started: 12/6/04 Date Completed: 12/7/04

6. ☐ Mud Rotary ☐ Jetted ☐ Bored ☐ Dug ☐ Air Rotary ☐ Driven ☐ Cable tool ☒ Other Sonic

7. USE: ☐ Domestic ☐ Public Supply–Permit No. ____ ☐ Industry ☐ Irrigation ☐ Air Conditioning ☐ Commercial ☐ Test Well ☒ Monitor Well ☐ ____

8. CASING: ☒ Threaded ☐ Welded

Diam.: 2 in.

Type: ☒ PVC ☐ Galvanized ☐ Steel ☐ Other

____ in. to 32 ft. depth

____ in. to ____ ft. depth

Height: Above/Below Surface ____ ft.

Weight ____ lb./ft.

Drive Shoe? ☐ Yes ☐ No

9. SCREEN

Type: [illegible] Diam.: 2

Slot/Gauge: [illegible] Length: [illegible] FT

Set Between: 32 ft. and 42 ft.

____ ft. and ____ ft.

NOTE: MULTIPLE SCREENS USE SECOND SHEET

Sieve Analysis ☐ Yes (please enclose) ☒ No

10. STATIC WATER LEVEL

____ ft. below land surface after 24 hours

11. PUMPING LEVEL Below Land Surface.

____ ft. after ____ hrs. Pumping ____ G.P.M.

Pumping Test: ☐ Yes (please enclose) ☒ No

Yield: ____

12. WATER QUALITY

Chemical Analysis ☐ Yes ☐ No Bacterial Analysis ☐ Yes ☐ No

Please enclose lab results.

13. ARTIFICIAL FILTER (gravel pack) ☐ Yes ☐ No

Installed from [illegible] ft. to [illegible] ft.

Effective size [illegible] Uniformity Coefficient ____

14. WELL GROUTED? ☐ Yes ☐ No

☐ Neat Cement ☐ Sand Cement ☐ Concrete ☐ Other [illegible]

Depth: From [illegible] ft. to [illegible] ft.

15. NEAREST SOURCE OF POSSIBLE CONTAMINATION: ____ ft. [illegible] direction

____ Type well disinfected upon completion ☐ Yes ☒ No Type: ____ Amount: ____

16. PUMP: Date installed: ____ Not installed ☒

Mfr. Name: ____ Model No.: ____

H.P. ____ Volts ____ Length of drop pipe ____ ft. Capacity ____ gpm

TYPE: ☐ Submersible ☐ Jet (shallow) ☐ Turbine ☐ Jet (deep) ☐ Reciprocating ☐ Centrifugal

17. WATER WELL CONTRACTOR'S CERTIFICATION: This well was drilled under my direction and this report is true to the best of my knowledge and belief.

Registered Business Name: [illegible] Date: [illegible]

Address: [illegible]

Signed: [illegible] Cert. No.: [illegible]

Authorized Representative

DHEC
PROMOTE PROTECT PROSPER

Water Well Record
Bureau of Water
2600 Bull Street, Columbia, SC 29201-1708; (803) 898-4300

1. WELL OWNER INFORMATION:
Name: [illegible] (last) (first)
Address: 133 [illegible] STREET
City: [illegible] State: SC Zip: 29405
Telephone: Work: 843 740 4053 Home:

2. LOCATION OF WELL: **COUNTY:**
Name: [illegible] NORTH
Street Address:
City: [illegible] Zip:
Latitude: Longitude:

3. PUBLIC SYSTEM NAME: **PUBLIC SYSTEM NUMBER:**

4. ABANDONMENT: ☐ Yes ☒ No
Grouted Depth: from _____ ft. to _____ ft.

Formation Description	*Thickness of Stratum	Depth to Bottom of Stratum
[illegible]	1	1
[illegible]	[illegible]	15
[illegible]	33+	48
[illegible]	1+	1
[illegible]	1	1

*Indicate Water Bearing Zones
(Use a 2nd sheet if needed) [illegible]

5. REMARKS: [illegible]

6. TYPE: ☐ Mud Rotary ☐ Jetted ☐ Bored ☐ Dug ☐ Air Rotary ☐ Driven ☐ Cable tool ☒ Other [illegible]

7. PERMIT NUMBER: 1+W-07-077

8. USE:
☐ Residential ☐ Public Supply ☐ Process
☐ Irrigation ☐ Air Conditioning ☐ Emergency
☐ Test Well ☒ Monitor Well ☐ Replacement

9. WELL DEPTH (completed) 50' ft. Date Started: 10/10/07 Date Completed: [illegible]

10. CASING: ☒ Threaded ☐ Welded
Diam.: 2"
Type: ☒ PVC ☐ Galvanized ☐ Steel ☐ Other
2 in. to 40 ft. depth
_____ in. to _____ ft. depth
Height: Above/Below Surface _____ ft.
Weight _____ lb./ft.
Drive Shoe? ☐ Yes ☐ No

11. SCREEN:
Type: SCHEDULE 40 Diam.: 2"
Slot/Gauge: 0.010" Length: 10'
Set Between: 40 ft. and 50 ft.
_____ ft. and _____ ft.
NOTE: MULTIPLE SCREENS USE SECOND SHEET
Sieve Analysis ☐ Yes (please enclose) ☒ No

12. STATIC WATER LEVEL 5 ft. below land surface after 24 hours

13. PUMPING LEVEL Below Land Surface.
_____ ft. after _____ hrs. Pumping _____ G.P.M.
Pumping Test: ☐ Yes (please enclose) ☒ No
Yield: _____

14. WATER QUALITY
Chemical Analysis ☐ Yes ☒ No Bacterial Analysis ☐ Yes ☒ No
Please enclose lab results.

15. ARTIFICIAL FILTER (filter pack) ☒ Yes ☐ No
Installed from 5' ft. to 37.5 ft.
Effective size [illegible] Uniformity Coefficient [illegible]

16. WELL GROUTED? ☒ Yes ☐ No
☐ Neat Cement ☐ Bentonite ☐ Bentonite/Cement ☒ Other CR
Depth: From 37.5 ft. to 1 ft.

17. NEAREST SOURCE OF POSSIBLE CONTAMINATION: [illegible] ft. [illegible] direction
Type _____
Well Disinfected ☐ Yes ☒ No Type: _____ Amount: _____

18. PUMP: Date installed: _____ Not installed ☒
Mfr. Name: _____ Model No.: _____
H.P. _____ Volts _____ Length of drop pipe ___ ft. Capacity ___ gpm
TYPE: ☐ Submersible ☐ Jet (shallow) ☐ Turbine ☐ Jet (deep) ☐ Reciprocating ☐ Centrifugal

19. WELL DRILLER: [illegible] **CERT. NO.:** [illegible]
Address: (Print) [illegible]
Level: A (B) C D (circle one)
Telephone No.: [illegible] Fax No.:

20. WATER WELL DRILLER'S CERTIFICATION: This well was drilled under my direction and this report is true to the best of my knowledge and belief.

Signed: _____ Date: [illegible]
Well Driller

If D Level Driller, provide supervising driller's name:

DHEC 1903 (03/2004) COPY 1 MAIL TO SCDHEC, COPY 2 TO WELL OWNER, COPY 3 TO WELL DRILLER

DHEC

PROMOTE PROTECT PROSPER

Water Well Record
Bureau of Water
2600 Bull Street, Columbia, SC 29201-1708; (803) 898-4300

1. WELL OWNER INFORMATION:
Name: US NAVY
(last) (first)
Address: 1330 [illegible]
City: [illegible] State: [illegible] Zip: 29406
Telephone: Work: 573-7[illegible]-4033 Home:

2. LOCATION OF WELL: **COUNTY:**
Name: A & B [illegible]
Street Address:
City: [illegible] Zip:
Latitude: Longitude:

3. PUBLIC SYSTEM NAME: **PUBLIC SYSTEM NUMBER:**

4. ABANDONMENT: ☐ Yes ☒ No
Grouted Depth: from _____ ft. to _____ ft.

Formation Description	*Thickness of Stratum	Depth to Bottom of Stratum
[illegible]	1	1
[illegible]	14	15
[illegible]	33	48
[illegible]	1	1
[illegible]	1	1
*Indicate Water Bearing Zones (Use a 2nd sheet if needed)		

5. REMARKS: [illegible]

6. TYPE: ☐ Mud Rotary ☐ Jetted ☐ Bored ☐ Dug ☐ Air Rotary ☐ Driven ☐ Cable tool ☐ Other [illegible]

7. PERMIT NUMBER: H W-04-077

8. USE:
☐ Residential ☐ Public Supply ☐ Process
☐ Irrigation ☐ Air Conditioning ☐ Emergency
☐ Test Well ☒ Monitor Well ☐ Replacement

9. WELL DEPTH (completed) Date Started: 12/10/04
50 ft. Date Completed: 12/10/04

10. CASING: ☒ Threaded ☐ Welded
Diam.: 2"
Type: ☒ PVC ☐ Galvanized ☐ Steel ☐ Other
2 in. to 40 ft. depth
_____ in. to _____ ft. depth
Height: Above/Below Surface _____ ft.
Weight _____ lb./ft.
Drive Shoe? ☐ Yes ☐ No

11. SCREEN:
Type: SCHA 40 PVC Diam.: 2"
Slot/Gauge: 0.010" Length: 10'
Set Between: 40 ft. and 50 ft.
_____ ft. and _____ ft.
NOTE: MULTIPLE SCREENS USE SECOND SHEET
Sieve Analysis ☐ Yes (please enclose) ☒ No

12. STATIC WATER LEVEL 5 ft. below land surface after 24 hours

13. PUMPING LEVEL Below Land Surface.
_____ ft. after _____ hrs. Pumping _____ G.P.M.
Pumping Test: ☐ Yes (please enclose) ☒ No
Yield: _____

14. WATER QUALITY
Chemical Analysis ☐ Yes ☒ No Bacterial Analysis ☐ Yes ☒ No
Please enclose lab results.

15. ARTIFICIAL FILTER (filter pack) ☒ Yes ☐ No
Installed from 37.7 ft. to 51 ft.
Effective size [illegible] Uniformity Coefficient [illegible]

16. WELL GROUTED? ☒ Yes ☐ No
☐ Neat Cement ☐ Bentonite ☐ Bentonite/Cement ☒ Other CB
Depth: From 35.2 ft. to [illegible] ft.

17. NEAREST SOURCE OF POSSIBLE CONTAMINATION: 10 ft. [illegible] direction
Type _____
Well Disinfected ☐ Yes ☐ No Type: _____ Amount: _____

18. PUMP: Date installed: _____ Not installed ☒
Mfr. Name: _____ Model No.: _____
H.P._____ Volts_____ Length of drop pipe ___ ft. Capacity ___ gpm
TYPE: ☐ Submersible ☐ Jet (shallow) ☐ Turbine ☐ Jet (deep) ☐ Reciprocating ☐ Centrifugal

19. WELL DRILLER: [illegible] CERT. NO.: 30653
Address: (Print) [illegible]
Level: A B C D (circle one)
Telephone No.: [illegible] Fax No.:

20. WATER WELL DRILLER'S CERTIFICATION: This well was drilled under my direction and this report is true to the best of my knowledge and belief.

Signed: _____ Date: 12/10/04
Well Driller

If D Level Driller, provide supervising driller's name:

DHEC
PROMOTE PROTECT PROSPER

Water Well Record
Bureau of Water
2600 Bull Street, Columbia, SC 29201-1708; (803) 898-4300

1. WELL OWNER INFORMATION:
Name: [illegible] (last) (first)
Address: 1330 [illegible] STREET
City: [illegible] State: SC Zip: [illegible]
Telephone: Work: 7437-4033 Home:

2. LOCATION OF WELL: COUNTY:
Name:
Street Address: [illegible]
City: Zip:
Latitude: Longitude:

3. PUBLIC SYSTEM NAME: PUBLIC SYSTEM NUMBER:

4. ABANDONMENT: ☐ Yes ☒ No
Grouted Depth: from _____ ft. to _____ ft.

Formation Description	*Thickness of Stratum	Depth to Bottom of Stratum
[illegible]	1	1
[illegible]	14*	15
[illegible]	33*	45
[illegible]	1*	1
[illegible]	1	1

*Indicate Water Bearing Zones
[illegible]
(Use a 2nd sheet if needed)

5. REMARKS: [illegible]

6. TYPE: ☐ Mud Rotary ☐ Jetted ☐ Bored ☐ Dug ☐ Air Rotary ☐ Driven ☐ Cable tool ☒ Other [illegible]

7. PERMIT NUMBER: HW-09-077

8. USE:
☐ Residential ☐ Public Supply ☐ Process
☐ Irrigation ☐ Air Conditioning ☐ Emergency
☐ Test Well ☒ Monitor Well ☐ Replacement

9. WELL DEPTH (completed) Date Started: [illegible]
50 ft. Date Completed: 12/1/09

10. CASING: ☐ Threaded ☐ Welded
Diam.: 2
Type: ☒ PVC ☐ Galvanized ☐ Steel ☐ Other
2 in. to 40 ft. depth
_____ in. to _____ ft. depth
Height: Above/Below Surface _____ ft.
Weight _____ lb./ft.
Drive Shoe? ☐ Yes ☐ No

11. SCREEN:
Type: [illegible] Diam.: 2
Slot/Gauge: 0.010" Length: 10'
Set Between: 40 ft. and 50 ft.
_____ ft. and _____ ft.
NOTE: MULTIPLE SCREENS USE SECOND SHEET
Sieve Analysis ☐ Yes (please enclose) ☒ No

12. STATIC WATER LEVEL 5 ft. below land surface after 24 hours

13. PUMPING LEVEL Below Land Surface.
_____ ft. after _____ hrs. Pumping _____ G.P.M.
Pumping Test: ☐ Yes (please enclose) ☒ No
Yield: _____

14. WATER QUALITY
Chemical Analysis ☐ Yes ☒ No Bacterial Analysis ☐ Yes ☒ No
Please enclose lab results.

15. ARTIFICIAL FILTER (filter pack) ☒ Yes ☐ No
Installed from 37.5 ft. to 51 ft.
Effective size [illegible] Uniformity Coefficient [illegible]

16. WELL GROUTED? ☒ Yes ☐ No
☐ Neat Cement ☐ Bentonite ☐ Bentonite/Cement ☒ Other CB
Depth: From 2.5 ft. to 1 ft.

17. NEAREST SOURCE OF POSSIBLE CONTAMINATION: [illegible] ft. [illegible] direction
Type _____
Well Disinfected ☐ Yes ☐ No Type: _____ Amount: _____

18. PUMP: Date installed: _____ Not installed ☒
Mfr. Name: _____ Model No.: _____
H.P. _____ Volts _____ Length of drop pipe ___ ft. Capacity ___ gpm
TYPE: ☐ Submersible ☐ Jet (shallow) ☐ Turbine ☐ Jet (deep) ☐ Reciprocating ☐ Centrifugal

19. WELL DRILLER: [illegible] CERT. NO.: [illegible]
Address: (Print) [illegible]
Level: A (B) C D (circle one)
Telephone No.: [illegible] Fax No.:

20. WATER WELL DRILLER'S CERTIFICATION: This well was drilled under my direction and this report is true to the best of my knowledge and belief.

Signed: _____ Date: [illegible]
Well Driller

If D Level Driller, provide supervising driller's name:

DHEC 1903 (03/2004) COPY 1 MAIL TO SCDHEC, COPY 2 TO WELL OWNER, COPY 3 TO WELL DRILLER

DHEC
PROMOTE PROTECT PROSPER

Water Well Record
Bureau of Water
2600 Bull Street, Columbia, SC 29201-1708; (803) 898-4300

WELL OWNER INFORMATION:
Name: US NAVY (last) (first)
Address: 1230 KILO STREET
City: CHARLESTON State: SC Zip: 29405
Telephone: Work: 843 74 4023 Home:

2. LOCATION OF WELL: COUNTY: CHARLESTON
Name: AVE B NORTH
Street Address:
City: CHARLES Zip:
Latitude: Longitude:

3. PUBLIC SYSTEM NAME: **PUBLIC SYSTEM NUMBER:**

4. ABANDONMENT: ☐ Yes ☒ No
Grouted Depth: from _____ ft. to _____ ft.

Formation Description	*Thickness of Stratum	Depth to Bottom of Stratum
LT BROWN SILTY SAND	1	1
LT BROWN BROWN FINE SAND W/ SOME SILT	14*	15
LT BROWN BROWN W/ SOME SILT	33*	48
BROWN/BLACK GRAVELLY SAND	1*	1
BLACK GREY CLAY	1	1

*Indicate Water Bearing Zones
AT 39 & 47 ft
(Use a 2nd sheet if needed)

5. REMARKS:
Bentonite clay seal
17-53 Bar - 31-33

6. TYPE: ☐ Mud Rotary ☐ Jetted ☐ Bored ☐ Dug ☐ Air Rotary ☐ Driven ☐ Cable tool ☐ Other 1 Cable

7. PERMIT NUMBER: HW-04-077

8. USE:
☐ Residential ☐ Public Supply ☐ Process
☐ Irrigation ☐ Air Conditioning ☐ Emergency
☐ Test Well ☒ Monitor Well ☐ Replacement

9. WELL DEPTH (completed) Date Started:
51 ft. Date Completed:

10. CASING: ☒ Threaded ☐ Welded
Diam.: 2"
Type: ☒ PVC ☐ Galvanized ☐ Steel ☐ Other
2 in. to 41 ft. depth
_____ in. to _____ ft. depth
Height: Above/Below Surface _____ ft.
Weight _____ lb./ft.
Drive Shoe? ☐ Yes ☐ No

11. SCREEN:
Type: SCHOTOPVC Diam.: 2"
Slot/Gauge: 0.010" Length: 10'
Set Between: 41 ft. and 51 ft.
_____ ft. and _____ ft.
NOTE: MULTIPLE SCREENS USE SECOND SHEET
Sieve Analysis ☐ Yes (please enclose) ☒ No

12. STATIC WATER LEVEL _____ ft. below land surface after 24 hours

13. PUMPING LEVEL Below Land Surface.
_____ ft. after _____ hrs. Pumping _____ G.P.M.
Pumping Test: ☐ Yes (please enclose) ☒ No
Yield: _____

14. WATER QUALITY
Chemical Analysis ☐ Yes ☒ No Bacterial Analysis ☐ Yes ☒ No
Please enclose lab results.

15. ARTIFICIAL FILTER (filter pack) ☒ Yes ☐ No
Installed from 38 ft. to 52 ft.
Effective size #1 Uniformity Coefficient TCF

16. WELL GROUTED? ☒ Yes ☐ No
☐ Neat Cement ☐ Bentonite ☐ Bentonite/Cement ☒ Other CB
Depth: From 35 ft. to 1 ft.

17. NEAREST SOURCE OF POSSIBLE CONTAMINATION: 10 ft. A direction
Type _____
Well Disinfected ☐ Yes ☐ No Type: _____ Amount: _____

18. PUMP: Date Installed: _____ Not installed ☒
Mfr. Name: _____ Model No.: _____
H.P. _____ Volts _____ Length of drop pipe ___ ft. Capacity ___ gpm
TYPE: ☐ Submersible ☐ Jet (shallow) ☐ Turbine ☐ Jet (deep) ☐ Reciprocating ☐ Centrifugal

19. WELL DRILLER: Jim Rogers CERT. NO.: B01683
Address: (Print) 2323 Hagemont Ave Charlotte NC 28210
Level: A. B C D (circle one)
Telephone No.: 704 965 4411 Fax No.:

20. WATER WELL DRILLER'S CERTIFICATION: This well was drilled under my direction and this report is true to the best of my knowledge and belief.

Signed: _____ Date: 12/9/04
Well Driller

If D Level Driller, provide supervising driller's name:

DHEC 1903 (03/2004) COPY 1 MAIL TO SCDHEC, COPY 2 TO WELL OWNER, COPY 3 TO WELL DRILLER

DHEC
PROMOTE PROTECT PROSPER

Water Well Record
Bureau of Water
2600 Bull Street, Columbia, SC 29201-1708; (803) 898-4300

1. WELL OWNER INFORMATION:
Name: US NAVY (last) (first)
Address: 1330 HELL STREET
City: CHARLESTON State: SC Zip: 29405
Telephone: Work: 843 74-9033 Home:

2. LOCATION OF WELL: **COUNTY:**
Name: AW BRANCH
Street Address: SAME
City: Zip:
Latitude: Longitude:

3. PUBLIC SYSTEM NAME: **PUBLIC SYSTEM NUMBER:**

4. ABANDONMENT: ☐ Yes ☒ No
Grouted Depth: from _____ ft. to _____ ft.

Formation Description	*Thickness of Stratum	Depth to Bottom of Stratum
LT BROWN SILTY SAND	1	1
LT BROWN CARBONATE TO GRAY CLAYEY SILT	14*	15
LT BROWN SAND W/ SOME SILT	33*	48
BROWN/BLACK GRAVELLY SAND	1*	1
BLUISH GREEN CLAY	1	1

*Indicate Water Bearing Zones
AD 39 & 44 D
(Use a 2nd sheet if needed)

5. REMARKS: MONITOR WELL PEACE [illegible] CONTRACT #3[illegible]

6. TYPE: ☐ Mud Rotary ☐ Jetted ☐ Bored ☐ Dug ☐ Air Rotary ☐ Driven ☐ Cable tool ☐ Other SONIC

7. PERMIT NUMBER: HW-07-077

8. USE:
☐ Residential ☐ Public Supply ☐ Process
☐ Irrigation ☐ Air Conditioning ☐ Emergency
☐ Test Well ☒ Monitor Well ☐ Replacement

9. WELL DEPTH (completed) Date Started: 12/4/04
51 ft. Date Completed: 12/4/04

10. CASING: ☐ Threaded ☐ Welded
Diam.: 2"
Type: ☒ PVC ☐ Galvanized ☐ Steel ☐ Other
2 in. to 41 ft. depth
_____ in. to _____ ft. depth
Height: Above/Below Surface _____ ft.
Weight _____ lb./ft.
Drive Shoe? ☐ Yes ☐ No

11. SCREEN:
Type: SCH40 PVC Diam.: 2"
Slot/Gauge: 0.010" Length: 10'
Set Between: 41 ft. and 51 ft.
_____ ft. and _____ ft.
NOTE: MULTIPLE SCREENS USE SECOND SHEET
Sieve Analysis ☐ Yes (please enclose) ☒ No

12. STATIC WATER LEVEL 5 ft. below land surface after 24 hours

13. PUMPING LEVEL Below Land Surface.
_____ ft. after _____ hrs. Pumping _____ G.P.M.
Pumping Test: ☐ Yes (please enclose) ☒ No
Yield: _____

14. WATER QUALITY
Chemical Analysis ☐ Yes ☒ No Bacterial Analysis ☐ Yes ☒ No
Please enclose lab results.

15. ARTIFICIAL FILTER (filter pack) ☒ Yes ☐ No
Installed from 38.5 ft. to 52 ft.
Effective size 1 Uniformity Coefficient 4.5

16. WELL GROUTED? ☒ Yes ☐ No
☐ Neat Cement ☐ Bentonite ☐ Bentonite/Cement ☒ Other CB
Depth: From 35 ft. to 1 ft.

17. NEAREST SOURCE OF POSSIBLE CONTAMINATION: 10 ft. N direction
Type _____
Well Disinfected ☐ Yes ☒ No Type: _____ Amount: _____

18. PUMP: Date installed: _____ Not installed ☒
Mfr. Name: _____ Model No.: _____
H.P. _____ Volts _____ Length of drop pipe ___ ft. Capacity ___ gpm
TYPE: ☐ Submersible ☐ Jet (shallow) ☐ Turbine ☐ Jet (deep) ☐ Reciprocating ☐ Centrifugal

19. WELL DRILLER: TOM ROY CERT. NO.: R01663
Address: (Print) 2372 MARATHON CHARLESTON SC 29410
Level: A B C D (circle one)
Telephone No.: 744 6544 Fax No.:

20. WATER WELL DRILLER'S CERTIFICATION: This well was drilled under my direction and this report is true to the best of my knowledge and belief.

Signed: _____ Date: 12/4/04
Well Driller

If D Level Driller, provide supervising driller's name:

DHEC 1903 (03/2004)

COPY 1 MAIL TO SCDHEC, COPY 2 TO WELL OWNER, COPY 3 TO WELL DRILLER

Water Well Record
Bureau of Water
2600 Bull Street, Columbia, SC 29201-1708; (803) 898-4300

DHEC — PROMOTE PROTECT PROSPER

1. WELL OWNER INFORMATION:
Name: US NAVY (last) (first)
Address: [illegible] KEELE STREET
City: CHARLESTON State: SC Zip: 29401
Telephone: Work: 843 740 4023 Home:

2. LOCATION OF WELL: COUNTY:
Name: AUX BUILDING
Street Address: SAME
City: Zip:
Latitude: Longitude:

3. PUBLIC SYSTEM NAME: PUBLIC SYSTEM NUMBER:

4. ABANDONMENT: ☐ Yes ☒ No
Grouted Depth: from _____ ft. to _____ ft.

Formation Description	*Thickness of Stratum	Depth to Bottom of Stratum
LT BROWN SILTY SAND	1	1
LT BROWN LAGOON GRAY CLAY SILT	5*	6
BROWN/BLACK PEAT	3*	9
LT BROWN MOTTLED GRAY CLAY	6	15
LT BROWN SILTY SAND	31*	46
BLACK GREEN CLAY	4	50

*Indicate Water Bearing Zones
AUGMENTED
(Use a 2nd sheet if needed)

5. REMARKS: [illegible]

6. TYPE: ☐ Mud Rotary ☐ Jetted ☐ Bored ☐ Dug ☐ Air Rotary ☐ Driven ☐ Cable tool ☒ Other SONIC

7. PERMIT NUMBER: HW04-077

8. USE: ☐ Residential ☐ Public Supply ☐ Process ☐ Irrigation ☐ Air Conditioning ☐ Emergency ☐ Test Well ☒ Monitor Well ☐ Replacement

9. WELL DEPTH (completed) 46 ft. Date Started: 12/4/[illegible] Date Completed: 12/4/[illegible]

10. CASING: ☒ Threaded ☐ Welded
Diam.: 2"
Type: ☒ PVC ☐ Galvanized ☐ Steel ☐ Other
2 in. to 36 ft. depth
_____ in. to _____ ft. depth
Height: Above/Below Surface _____ ft.
Weight _____ lb./ft.
Drive Shoe? ☐ Yes ☐ No

11. SCREEN:
Type: SCH 40 PVC Diam.: 2"
Slot/Gauge: 0.010" Length: 10'
Set Between: 46 ft. and 36 ft.
_____ ft. and _____ ft.
NOTE: MULTIPLE SCREENS USE SECOND SHEET
Sieve Analysis ☐ Yes (please enclose) ☒ No

12. STATIC WATER LEVEL 5 ft. below land surface after 24 hours

13. PUMPING LEVEL Below Land Surface.
_____ ft. after _____ hrs. Pumping _____ G.P.M.
Pumping Test: ☐ Yes (please enclose) ☒ No
Yield: _____

14. WATER QUALITY
Chemical Analysis ☐ Yes ☒ No Bacterial Analysis ☐ Yes ☒ No
Please enclose lab results.

15. ARTIFICIAL FILTER (filter pack) ☒ Yes ☐ No
Installed from 47 ft. to 33.5 ft.
Effective size [illegible] Uniformity Coefficient [illegible]

16. WELL GROUTED? ☒ Yes ☐ No
☐ Neat Cement ☐ Bentonite ☐ Bentonite/Cement ☒ Other CB
Depth: From 30 ft. to 1 ft.

17. NEAREST SOURCE OF POSSIBLE CONTAMINATION: 12 ft. N direction
Type _____
Well Disinfected ☐ Yes ☒ No Type: _____ Amount: _____

18. PUMP: Date installed: _____ Not installed ☒
Mfr. Name: _____ Model No.: _____
H.P. _____ Volts _____ Length of drop pipe ___ ft. Capacity ___ gpm
TYPE: ☐ Submersible ☐ Jet (shallow) ☐ Turbine ☐ Jet (deep) ☐ Reciprocating ☐ Centrifugal

19. WELL DRILLER: [illegible] CERT. NO.: B0[illegible]
Address: (Print) [illegible] Level: A B C D (circle one)
Telephone No.: 704 [illegible] Fax No.:

20. WATER WELL DRILLER'S CERTIFICATION: This well was drilled under my direction and this report is true to the best of my knowledge and belief.

Signed: _____ Date: 12/[illegible]
Well Driller

If D Level Driller, provide supervising driller's name:

DHEC 1903 (03/2004) COPY 1 MAIL TO SCDHEC, COPY 2 TO WELL OWNER, COPY 3 TO WELL DRILLER

DHEC
PROMOTE PROTECT PROSPER

Water Well Record
Bureau of Water
2600 Bull Street, Columbia, SC 29201-1708; (803) 898-4300

1. WELL OWNER INFORMATION:
Name: [illegible] (last) (first)
Address: 330 King Street
City: [illegible] State: SC Zip: 29464
Telephone: Work: 843 740 4033 Home:

2. LOCATION OF WELL: **COUNTY:**
Name: Avenue of Oaks
Street Address: [illegible]
City: Zip:
Latitude: Longitude:

3. PUBLIC SYSTEM NAME: **PUBLIC SYSTEM NUMBER:**

4. ABANDONMENT: ☐ Yes ☒ No
Grouted Depth: from _____ ft. to _____ ft.

Formation Description	*Thickness of Stratum	Depth to Bottom of Stratum
Lt Brown Silty Sand	1	1
Lt Brown Gravel w/ Dry Clay Content	14*	15
Lt Brown Sand	34*	49
Brown/Green Clay	1	10

*Indicate Water Bearing Zones
(Use a 2nd sheet if needed) 34 & 44D

5. REMARKS: Monitored Polluted Well 34-37' BGS

6. TYPE: ☐ Mud Rotary ☐ Jetted ☐ Bored ☐ Dug ☐ Air Rotary ☐ Driven ☐ Cable tool ☒ Other Sonic

7. PERMIT NUMBER: HW-01-077

8. USE:
☐ Residential ☐ Public Supply ☐ Process
☐ Irrigation ☐ Air Conditioning ☐ Emergency
☐ Test Well ☒ Monitor Well ☐ Replacement

9. WELL DEPTH (completed) 49 ft. Date Started: 12/8/04 Date Completed: 12/9/04

10. CASING: ☒ Threaded ☐ Welded
Diam.: 2"
Type: ☒ PVC ☐ Galvanized ☐ Steel ☐ Other
2 in. to 39 ft. depth
_____ in. to _____ ft. depth
Height: Above/Below Surface _____ ft.
Weight _____ lb./ft.
Drive Shoe? ☐ Yes ☐ No

11. SCREEN:
Type: Sch 80 PVC Diam.: 2"
Slot/Gauge: 0.010" Length: 10'
Set Between: 39 ft. and 49 ft.
_____ ft. and _____ ft.
NOTE: MULTIPLE SCREENS USE SECOND SHEET
Sieve Analysis ☐ Yes (please enclose) ☒ No

12. STATIC WATER LEVEL 5 ft. below land surface after 24 hours

13. PUMPING LEVEL Below Land Surface.
_____ ft. after _____ hrs. Pumping _____ G.P.M.
Pumping Test: ☐ Yes (please enclose) ☒ No
Yield: _____

14. WATER QUALITY
Chemical Analysis ☐ Yes ☒ No Bacterial Analysis ☐ Yes ☒ No
Please enclose lab results.

15. ARTIFICIAL FILTER (filter pack) ☒ Yes ☐ No
Installed from 37 ft. to 50 ft.
Effective size #1 Uniformity Coefficient [illegible]

16. WELL GROUTED? ☒ Yes ☐ No
☐ Neat Cement ☐ Bentonite ☐ Bentonite/Cement ☒ Other CB
Depth: From 34 ft. to 1 ft.

17. NEAREST SOURCE OF POSSIBLE CONTAMINATION: 10 ft. N direction
Type _____
Well Disinfected ☐ Yes ☒ No Type: _____ Amount: _____

18. PUMP: Date installed: _____ Not installed ☒
Mfr. Name: _____ Model No.: _____
H.P. _____ Volts _____ Length of drop pipe ___ ft. Capacity ___ gpm
TYPE: ☐ Submersible ☐ Jet (shallow) ☐ Turbine ☐ Jet (deep) ☐ Reciprocating ☐ Centrifugal

19. WELL DRILLER: Jim Ray **CERT. NO.:** B4023
Address: (Print) 2223 Ingram Avenue Charleston 29410
Level: A (B) C D (circle one)
Telephone No.: 704 [illegible] Fax No.:

20. WATER WELL DRILLER'S CERTIFICATION: This well was drilled under my direction and this report is true to the best of my knowledge and belief.

Signed: _____ Date: 12/14/
Well Driller

If D Level Driller, provide supervising driller's name:

DHEC 1903 (03/2004)

COPY 1 MAIL TO SCDHEC, COPY 2 TO WELL OWNER, COPY 3 TO WELL DRILLER

DHEC
PROMOTE PROTECT PROSPER

Water Well Record
Bureau of Water
2600 Bull Street, Columbia, SC 29201-1708; (803) 898-4300

1. WELL OWNER INFORMATION:
Name: US NAVY (last) (first)
Address: 1330 KELO Street
City: CHARLESTON State: SC Zip: 2 4701
Telephone: Work: 843 7404033 Home:

2. LOCATION OF WELL: COUNTY:
Name: AVE B NORTH
Street Address: SAME
City: Zip:
Latitude: Longitude:

3. PUBLIC SYSTEM NAME: PUBLIC SYSTEM NUMBER:

4. ABANDONMENT: ☐ Yes ☒ No
Grouted Depth: from ______ ft. to ______ ft.

Formation Description	*Thickness of Stratum	Depth to Bottom of Stratum
LT Brown SILTY SAND	1	1
LT Brown GRADING TO GRAY CLAYEY	14*	15
LT Brown SAND	32*	47
Brown/BLACK SAND w/ pebbles	1*	48
BLACK GREEN CLAY	2	50

*Indicate Water Bearing Zones A034 GW 73D
(Use a 2nd sheet if needed)

5. REMARKS: Backfill Pellet 48' 50-48' BG 37-32' Bent

6. TYPE: ☐ Mud Rotary ☐ Jetted ☐ Bored ☐ Dug ☐ Air Rotary ☐ Driven ☐ Cable tool ☒ Other SONIC

7. PERMIT NUMBER: HW-04-077

8. USE: ☐ Residential ☐ Public Supply ☐ Process ☐ Irrigation ☐ Air Conditioning ☐ Emergency ☐ Test Well ☒ Monitor Well ☐ Replacement

9. WELL DEPTH (completed) 47 ft. Date Started: 12/8/04 Date Completed: 12/8/04

10. CASING: ☒ Threaded ☐ Welded
Diam.: 2
Type: ☒ PVC ☐ Galvanized ☐ Steel ☐ Other
2 in. to 37 ft. depth
______ in. to ______ ft. depth
Height: Above/Below Surface ______ ft.
Weight ______ lb./ft.
Drive Shoe? ☐ Yes ☐ No

11. SCREEN:
Type: SCH 40 PVC Diam.: 2"
Slot/Gauge: 0.010" Length: 10'
Set Between: 37 ft. and 47 ft. NOTE: MULTIPLE SCREENS
______ ft. and ______ ft. USE SECOND SHEET
Sieve Analysis ☐ Yes (please enclose) ☒ No

12. STATIC WATER LEVEL 5 ft. below land surface after 24 hours

13. PUMPING LEVEL Below Land Surface.
______ ft. after ______ hrs. Pumping ______ G.P.M.
Pumping Test: ☐ Yes (please enclose) ☒ No
Yield:

14. WATER QUALITY
Chemical Analysis ☐ Yes ☒ No Bacterial Analysis ☐ Yes ☒ No
Please enclose lab results.

15. ARTIFICIAL FILTER (filter pack) ☒ Yes ☐ No
Installed from 48 ft. to 35 ft.
Effective size #1 Uniformity Coefficient ---

16. WELL GROUTED? ☒ Yes ☐ No
☐ Neat Cement ☐ Bentonite ☐ Bentonite/Cement ☒ Other CB
Depth: From 32 ft. to 1 ft.

17. NEAREST SOURCE OF POSSIBLE CONTAMINATION: 10 ft. N direction
Type
Well Disinfected ☐ Yes ☒ No Type: Amount:

18. PUMP: Date installed: Not installed ☒
Mfr. Name: Model No.:
H.P. ____ Volts ____ Length of drop pipe ___ ft. Capacity ____ gpm
TYPE: ☐ Submersible ☐ Jet (shallow) ☐ Turbine ☐ Jet (deep) ☐ Reciprocating ☐ Centrifugal

19. WELL DRILLER: TERRY RUT CERT. NO.: 001673
Address: (Print) Level: A Ⓑ C D (circle one)
2323 Hopewell Dr. Charlotte NC 28210
Telephone No.: 704 465 7111 Fax No.:

20. WATER WELL DRILLER'S CERTIFICATION: This well was drilled under my direction and this report is true to the best of my knowledge and belief.

Signed: [signature] Well Driller Date: 12/9/04

If D Level Driller, provide supervising driller's name:

DHEC
PROMOTE PROTECT PROSPER

Water Well Record
Bureau of Water
2600 Bull Street, Columbia, SC 29201-1708; (803) 898-4300

1. WELL OWNER INFORMATION:
Name: US NAVY (last) (first)
Address: 1330 KILO STREET
City: CHARLESTON State: SC Zip: 29405
Telephone: Work: 843.740.4033 Home:

2. LOCATION OF WELL: COUNTY: CHARLESTON SC
Name: US NAVY AVE BAURT
Street Address: ~~1330 KILO STREET~~
City: CHARLESTON SC Zip: 29405
Latitude: Longitude:

3. PUBLIC SYSTEM NAME: **PUBLIC SYSTEM NUMBER:**

4. ABANDONMENT: ☐ Yes ☒ No
Grouted Depth: from _____ ft. to _____ ft.

Formation Description	*Thickness of Stratum	Depth to Bottom of Stratum
LT BROWN SLTY SAND	1	1
LT BROWN GRADING TO GRAY CLAYEY SILT	14+	15
LT BROWN SAND w/ some silt	33+	48
BROWN/ BLACK GRANULAR SAND	1+	1
BLACK GREEN CLAY	1	1

*Indicate Water Bearing Zones
A034 GW 42D
(Use a 2nd sheet if needed)

5. REMARKS: [illegible]
50-49 BG. + 36-37 69'

6. TYPE: ☐ Mud Rotary ☐ Jetted ☐ Bored ☐ Dug ☐ Air Rotary ☐ Driven ☐ Cable tool ☒ Other SONIC

7. PERMIT NUMBER: HW-04-077

8. USE: ☐ Residential ☐ Public Supply ☐ Process ☐ Irrigation ☐ Air Conditioning ☐ Emergency ☐ Test Well ☒ Monitor Well ☐ Replacement

9. WELL DEPTH (completed) 48 ft. Date Started: 12/8/04 Date Completed: 12/8/04

10. CASING: ☒ Threaded ☐ Welded
Diam.: 2"
Type: ☒ PVC ☐ Galvanized ☐ Steel ☐ Other
2 in. to 38 ft. depth
_____ in. to _____ ft. depth
Height: Above/Below Surface _____ ft.
Weight _____ lb./ft.
Drive Shoe? ☐ Yes ☐ No

11. SCREEN:
Type: SCHD 80 PVC Diam.: 2"
Slot/Gauge: 0.010" Length: 10'
Set Between: 38 ft. and 48 ft.
_____ ft. and _____ ft.
NOTE: MULTIPLE SCREENS USE SECOND SHEET
Sieve Analysis ☐ Yes (please enclose) ☒ No

12. STATIC WATER LEVEL 5 ft. below land surface after 24 hours

13. PUMPING LEVEL Below Land Surface.
_____ ft. after _____ hrs. Pumping _____ G.P.M.
Pumping Test: ☐ Yes (please enclose) ☒ No
Yield: _____

14. WATER QUALITY
Chemical Analysis ☐ Yes ☒ No Bacterial Analysis ☐ Yes ☒ No
Please enclose lab results.

15. ARTIFICIAL FILTER (filter pack) ☒ Yes ☐ No
Installed from 36 ft. to 49 ft.
Effective size #1 Uniformity Coefficient [illegible]

16. WELL GROUTED? ☒ Yes ☐ No
☐ Neat Cement ☐ Bentonite ☐ Bentonite/Cement ☒ Other CB
Depth: From 33 ft. to 1 ft.

17. NEAREST SOURCE OF POSSIBLE CONTAMINATION: 10 ft. N direction
Type _____
Well Disinfected ☐ Yes ☒ No Type: _____ Amount: _____

18. PUMP: Date Installed: _____ Not installed ☒
Mfr. Name: _____ Model No.: _____
H.P. _____ Volts _____ Length of drop pipe ___ ft. Capacity ___ gpm
TYPE: ☐ Submersible ☐ Jet (shallow) ☐ Turbine ☐ Jet (deep) ☐ Reciprocating ☐ Centrifugal

19. WELL DRILLER: JIM ROY CERT. NO.: B01683
Address: (Print) 2323 Hyde Park Drive CHARLOTTE NC 28210
Level: A (B) C D (circle one)
Telephone No.: 704 966 4111 Fax No.:

20. WATER WELL DRILLER'S CERTIFICATION: This well was drilled under my direction and this report is true to the best of my knowledge and belief.

Signed: _____ Date: 12/9/04
Well Driller

If D Level Driller, provide supervising driller's name:

DHEC 1903 (03/2004) COPY 1 MAIL TO SCDHEC. COPY 2 TO WELL OWNER. COPY 3 TO WELL DRILLER

APPENDIX E

Summary of Analytical Data

SampleID	StationID	Matrix	SampleType	DateCollected	Method	ParamID	Paramname	AnaValue	ProjQual	MDL	RL	Units
039GW35DP2DL	A039GW35D	WG	LR	13-Jan-05	SW8260B	DCE12C	cis-1,2-Dichloroethylene	193	=	1.5	25	ug/L
039GW35DP2DL	A039GW35D	WG	LR	13-Jan-05	SW8260B	TCE	Trichloroethylene (TCE)	268	=	1.8	25	ug/L
039GW35DP2	A039GW35D	WG	N	17-Jan-05	SW8260B	DCE11	1,1-Dichloroethene	5.3	=	0.41	5	ug/L
039GW35DP2	A039GW35D	WG	N	17-Jan-05	E310.1	ALK	Alkalinity, Total (as CaCO3)	525	=	1.45	2	mg/L
039GW35DP2	A039GW35D	WG	N	17-Jan-05	E300	BR	Bromide	0.251	=	0.0978	0.2	mg/L
039GW35DP2	A039GW35D	WG	N	17-Jan-05	SW6010B	DISSFE	Iron, Dissolved	9590	=	5.66	100	ug/L
039GW35DP2	A039GW35D	WG	N	17-Jan-05	SW6010B	DISSMN	Manganese, Dissolved	346	=	0.087	15	ug/L
039GW35DP2	A039GW35D	WG	N	17-Jan-05	E300	SO4	Sulfate (as SO4)	152	=	1.93	4	mg/L
039GW35DP2	A039GW35D	WG	N	17-Jan-05	E376.2	S	Sulfide	0.0248	UJ	0.0248	0.1	mg/L
039GW35DP2	A039GW35D	WG	N	17-Jan-05	SW8260B	PCE	Tetrachloroethylene (PCE)	1.5	J	0.33	5	ug/L
039GW35DP2	A039GW35D	WG	N	17-Jan-05	E415.1	TOC	Total Organic Carbon	7.9	=	0.025	0.2	mg/L
039GW35DP2	A039GW35D	WG	N	17-Jan-05	SW8260B	DCE12T	trans-1,2-Dichloroethene	0.94	J	0.37	5	ug/L
039GW35DP2	A039GW35D	WG	N	17-Jan-05	SW8260B	VC	Vinyl chloride	4.3	J	0.55	10	ug/L
039GW35DP2A	A039GW35D	WG	N	05-Apr-05	SW8260B	DCE11	1,1-Dichloroethene	5.9	=	0.3	5	ug/L
039GW35DP2ADL	A039GW35D	WG	LR	05-Apr-05	SW8260B	DCE12C	cis-1,2-Dichloroethylene	248	=	1.5	25	ug/L
039GW35DP2A	A039GW35D	WG	N	05-Apr-05	SW8260B	PCE	Tetrachloroethylene (PCE)	1.6	J	0.25	5	ug/L
039GW35DP2A	A039GW35D	WG	N	05-Apr-05	E415.1	TOC	Total Organic Carbon	8.15	=	0.074	0.2	mg/L
039GW35DP2A	A039GW35D	WG	N	05-Apr-05	SW8260B	DCE12T	trans-1,2-Dichloroethene	1.2	J	0.3	5	ug/L
039GW35DP2ADL	A039GW35D	WG	LR	05-Apr-05	SW8260B	TCE	Trichloroethylene (TCE)	302	=	1.25	25	ug/L
039GW35DP2A	A039GW35D	WG	N	05-Apr-05	SW8260B	VC	Vinyl chloride	4.4	J	0.5	10	ug/L
039GW35DQ1	A039GW35D	WG	N	09-May-05	SW8260B	DCE11	1,1-Dichloroethene	5.4	=	0.3	5	ug/L
039GW35DQ1DL	A039GW35D	WG	LR	09-May-05	SW8260B	DCE12C	cis-1,2-Dichloroethylene	234	=	1.5	25	ug/L
039GW35DQ1	A039GW35D	WG	N	09-May-05	SW8260B	PCE	Tetrachloroethylene (PCE)	1.6	J	0.25	5	ug/L
039GW35DQ1	A039GW35D	WG	N	09-May-05	E415.1	TOC	Total Organic Carbon	8.88	=	0.074	0.2	mg/L
039GW35DQ1	A039GW35D	WG	N	09-May-05	SW8260B	DCE12T	trans-1,2-Dichloroethene	1.2	J	0.3	5	ug/L
039GW35DQ1DL	A039GW35D	WG	LR	09-May-05	SW8260B	TCE	Trichloroethylene (TCE)	299	=	1.25	25	ug/L
039GW35DQ1	A039GW35D	WG	N	09-May-05	SW8260B	VC	Vinyl chloride	4.4	J	0.5	10	ug/L
039GW35DQ2	A039GW35D	WG	N	14-Jun-05	E415.1	TOC	Total Organic Carbon	7.56	=	0.074	0.2	mg/L
039GW35DQ4	A039GW35D	WG	N	29-Jul-05	E415.1	TOC	Total Organic Carbon	7.05	=	0.074	0.2	mg/L
039GW35DQ5	A039GW35D	WG	N	01-Sep-05	E415.1	TOC	Total Organic Carbon	7.33	=	0.074	1	mg/L
039GW35DQ7	A039GW35D	WG	N	30-Nov-05	SW8260B	DCE11	1,1-Dichloroethene	7.9	=	1.5	5	ug/L
039GW35DQ7	A039GW35D	WG	N	30-Nov-05	E310.1	ALK	Alkalinity, Total (as CaCO3)	487	=	1.45	2	mg/L
039GW35DQ7	A039GW35D	WG	N	30-Nov-05	E300	BR	Bromide	0.766	=	0.041	0.2	mg/L
039GW35DQ7	A039GW35D	WG	N	30-Nov-05	SW8260B	DCE12C	cis-1,2-Dichloroethylene	318	=	1.5	5	ug/L
039GW35DQ7	A039GW35D	WG	N	30-Nov-05	SW8260B	PCE	Tetrachloroethylene (PCE)	5	U	1.25	5	ug/L
039GW35DQ7	A039GW35D	WG	N	30-Nov-05	E415.1	TOC	Total Organic Carbon	11.9	=	0.074	1	mg/L

SampleID	StationID	Matrix	SampleType	DateCollected	Method	ParamID	Paramname	AnaValue	ProjQual	MDL	RL	Units
039GW35DQ7	A039GW35D	WG	N	30-Nov-05	SW8260B	DCE12T	trans-1,2-Dichloroethene	5	U	1.5	5	ug/L
039GW35DQ7	A039GW35D	WG	N	30-Nov-05	SW8260B	TCE	Trichloroethylene (TCE)	130	=	1.25	5	ug/L
039GW35DQ7	A039GW35D	WG	N	30-Nov-05	SW8260B	VC	Vinyl chloride	5.3	=	2.5	5	ug/L
039GW35DR2	A039GW35D	WG	N	13-Jul-06	SW8260B	TCA111	1,1,1-Trichloroethane	1	U	0.3	1	ug/L
039GW35DR2	A039GW35D	WG	N	13-Jul-06	SW8260B	PCA	1,1,2,2-Tetrachloroethane	1	U	0.25	1	ug/L
039GW35DR2	A039GW35D	WG	N	13-Jul-06	SW8260B	TCA112	1,1,2-Trichloroethane	1	U	0.25	1	ug/L
039GW35DR2	A039GW35D	WG	N	13-Jul-06	SW8260B	DCA11	1,1-Dichloroethane	2	=	0.3	1	ug/L
039GW35DR2	A039GW35D	WG	N	13-Jul-06	SW8260B	DCE11	1,1-Dichloroethene	2.5	=	0.3	1	ug/L
039GW35DR2	A039GW35D	WG	N	13-Jul-06	SW8260B	TCB123	1,2,3-Trichlorobenzene	1	U	0.3	1	ug/L
039GW35DR2	A039GW35D	WG	N	13-Jul-06	SW8260B	TCB124	1,2,4-Trichlorobenzene	1	U	0.3	1	ug/L
039GW35DR2	A039GW35D	WG	N	13-Jul-06	SW8260B	DCBZ12	1,2-Dichlorobenzene	1	U	0.25	1	ug/L
039GW35DR2	A039GW35D	WG	N	13-Jul-06	SW8260B	DCA12	1,2-Dichloroethane	1	U	0.25	1	ug/L
039GW35DR2	A039GW35D	WG	N	13-Jul-06	SW8260B	DCE12TOT	1,2-Dichloroethene (total)	122	=	0.3	1	ug/L
039GW35DR2	A039GW35D	WG	N	13-Jul-06	SW8260B	DCPA12	1,2-Dichloropropane	1	U	0.25	1	ug/L
039GW35DR2	A039GW35D	WG	N	13-Jul-06	SW8260B	DCBZ13	1,3-Dichlorobenzene	1	U	0.25	1	ug/L
039GW35DR2	A039GW35D	WG	N	13-Jul-06	SW8260B	DCBZ14	1,4-Dichlorobenzene	1	U	0.25	1	ug/L
039GW35DR2	A039GW35D	WG	N	13-Jul-06	SW8260B	CEVETH	2-Chloroethyl vinyl ether	5	UJ	1.5	5	ug/L
039GW35DR2	A039GW35D	WG	N	13-Jul-06	SW8260B	HXO2	2-Hexanone	10	U	1.25	10	ug/L
039GW35DR2	A039GW35D	WG	N	13-Jul-06	SW8260B	ACE	Acetone	10	U	1.25	10	ug/L
039GW35DR2	A039GW35D	WG	N	13-Jul-06	SW8260B	BZ	Benzene	0.85	J	0.3	1	ug/L
039GW35DR2	A039GW35D	WG	N	13-Jul-06	SW8260B	BDCME	Bromodichloromethane	1	U	0.25	1	ug/L
039GW35DR2	A039GW35D	WG	N	13-Jul-06	SW8260B	TBME	Bromoform	1	U	0.25	1	ug/L
039GW35DR2	A039GW35D	WG	N	13-Jul-06	SW8260B	BRME	Bromomethane	1	U	0.5	1	ug/L
039GW35DR2	A039GW35D	WG	N	13-Jul-06	SW8260B	CDS	Carbon Disulfide	5	U	1.25	5	ug/L
039GW35DR2	A039GW35D	WG	N	13-Jul-06	SW8260B	CTCL	Carbon Tetrachloride	1	U	0.25	1	ug/L
039GW35DR2	A039GW35D	WG	N	13-Jul-06	SW8260B	CLBZ	Chlorobenzene	1	U	0.25	1	ug/L
039GW35DR2	A039GW35D	WG	N	13-Jul-06	SW8260B	CLEA	Chloroethane	1	U	0.5	1	ug/L
039GW35DR2	A039GW35D	WG	N	13-Jul-06	SW8260B	TCLME	Chloroform	1	U	0.25	1	ug/L
039GW35DR2	A039GW35D	WG	N	13-Jul-06	SW8260B	CLME	Chloromethane	1	U	0.5	1	ug/L
039GW35DR2DL	A039GW35D	WG	LR	13-Jul-06	SW8260B	DCE12C	cis-1,2-Dichloroethylene	126	=	0.6	2	ug/L
039GW35DR2	A039GW35D	WG	N	13-Jul-06	SW8260B	DCP13C	cis-1,3-Dichloropropene	1	U	0.25	1	ug/L
039GW35DR2	A039GW35D	WG	N	13-Jul-06	SW8260B	DBCME	Dibromochloromethane	1	U	0.25	1	ug/L
039GW35DR2	A039GW35D	WG	N	13-Jul-06	SW8260B	EBZ	Ethylbenzene	1	U	0.25	1	ug/L
039GW35DR2	A039GW35D	WG	N	13-Jul-06	SW8260B	XYLMP	m+p Xylene	2	U	0.25	2	ug/L
039GW35DR2	A039GW35D	WG	N	13-Jul-06	SW8260B	MEK	Methyl ethyl ketone (2-Butanone)	10	U	1.25	10	ug/L

SampleID	StationID	Matrix	SampleType	DateCollected	Method	ParamID	Paramname	AnaValue	ProjQual	MDL	RL	Units
039GW35DR2	A039GW35D	WG	N	13-Jul-06	SW8260B	MIBK	Methyl isobutyl ketone (4-Methyl-2-pentanone)	10	U	1.25	10	ug/L
039GW35DR2	A039GW35D	WG	N	13-Jul-06	SW8260B	MTLNCL	Methylene Chloride	5	U	2	5	ug/L
039GW35DR2	A039GW35D	WG	N	13-Jul-06	SW8260B	XYLO	o-Xylene	1	U	0.25	1	ug/L
039GW35DR2	A039GW35D	WG	N	13-Jul-06	SW8260B	STY	Styrene	1	U	0.25	1	ug/L
039GW35DR2	A039GW35D	WG	N	13-Jul-06	SW8260B	PCE	Tetrachloroethylene (PCE)	1	U	0.25	1	ug/L
039GW35DR2	A039GW35D	WG	N	13-Jul-06	SW8260B	BZME	Toluene	1	U	0.25	1	ug/L
039GW35DR2	A039GW35D	WG	N	13-Jul-06	E415.1	TOC	Total Organic Carbon	11.1	=	0.33	1	mg/L
039GW35DR2	A039GW35D	WG	N	13-Jul-06	SW8260B	DCE12T	trans-1,2-Dichloroethene	1.5	=	0.3	1	ug/L
039GW35DR2	A039GW35D	WG	N	13-Jul-06	SW8260B	DCP13T	trans-1,3-Dichloropropene	1	U	0.25	1	ug/L
039GW35DR2	A039GW35D	WG	N	13-Jul-06	SW8260B	TCE	Trichloroethylene (TCE)	25.6	=	0.25	1	ug/L
039GW35DR2	A039GW35D	WG	N	13-Jul-06	SW8260B	VA	Vinyl acetate	5	U	1.5	5	ug/L
039GW35DR2	A039GW35D	WG	N	13-Jul-06	SW8260B	VC	Vinyl chloride	59.7	=	0.5	1	ug/L
039GW35DR2	A039GW35D	WG	N	13-Jul-06	SW8260B	XYLENES	Xylenes, Total	3	U	0.25	3	ug/L
039GW35DR3	A039GW35D	WG	N	17-Aug-06	E415.1	TOC	Total Organic Carbon	13	J	0.33	1	mg/L
039GW35DR4	A039GW35D	WG	N	19-Sep-06	E415.1	TOC	Total Organic Carbon	13.3	=	0.33	1	mg/L
039GW35DR5	A039GW35D	WG	N	30-Oct-06	SW8260B	DCE11	1,1-Dichloroethene	1	J	0.3	5	ug/L
039GW35DR5	A039GW35D	WG	N	30-Oct-06	SW8260B	DCE12TOT	1,2-Dichloroethene (total)	60.5	=	0.3	5	ug/L
039GW35DR5	A039GW35D	WG	N	30-Oct-06	SW8260B	DCE12C	cis-1,2-Dichloroethylene	58.8	=	0.3	5	ug/L
039GW35DR5	A039GW35D	WG	N	30-Oct-06	SW8260B	PCE	Tetrachloroethylene (PCE)	5	U	0.25	5	ug/L
039GW35DR5	A039GW35D	WG	N	30-Oct-06	E415.1	TOC	Total Organic Carbon	15.8	=	0.33	1	mg/L
039GW35DR5	A039GW35D	WG	N	30-Oct-06	SW8260B	DCE12T	trans-1,2-Dichloroethene	1.7	J	0.3	5	ug/L
039GW35DR5	A039GW35D	WG	N	30-Oct-06	SW8260B	TCE	Trichloroethylene (TCE)	20.9	=	0.25	5	ug/L
039GW35DR5	A039GW35D	WG	N	30-Oct-06	SW8260B	VC	Vinyl chloride	94.1	=	0.5	10	ug/L
039GW35DR7	A039GW35D	WG	N	05-Dec-06	E415.1	TOC	Total Organic Carbon	14.5	=	0.33	1	mg/L
039GW37DP2	A039GW37D	WG	N	17-Jan-05	SW8260B	DCE11	1,1-Dichloroethene	20.2	J	4.1	50	ug/L
039GW37DP2	A039GW37D	WG	N	17-Jan-05	E310.1	ALK	Alkalinity, Total (as CaCO3)	232	=	1.45	2	mg/L
039GW37DP2	A039GW37D	WG	N	17-Jan-05	E300	BR	Bromide	0.485	=	0.0978	0.2	mg/L
039GW37DP2	A039GW37D	WG	N	17-Jan-05	SW8260B	DCE12C	cis-1,2-Dichloroethylene	766	=	3	50	ug/L
039GW37DP2	A039GW37D	WG	N	17-Jan-05	SW6010B	DISSFE	Iron, Dissolved	18400	=	5.66	100	ug/L
039GW37DP2	A039GW37D	WG	N	17-Jan-05	SW6010B	DISSMN	Manganese, Dissolved	565	=	0.087	15	ug/L
039GW37DP2	A039GW37D	WG	N	17-Jan-05	E300	SO4	Sulfate (as SO4)	121	=	1.93	4	mg/L
039GW37DP2	A039GW37D	WG	N	17-Jan-05	E376.2	S	Sulfide	0.0248	UJ	0.0248	0.1	mg/L
039GW37DP2	A039GW37D	WG	N	17-Jan-05	SW8260B	PCE	Tetrachloroethylene (PCE)	14.8	J	3.3	50	ug/L
039GW37DP2	A039GW37D	WG	N	17-Jan-05	E415.1	TOC	Total Organic Carbon	5.06	U	0.025	0.2	mg/L
039GW37DP2	A039GW37D	WG	N	17-Jan-05	SW8260B	DCE12T	trans-1,2-Dichloroethene	4.2	J	3.7	50	ug/L
039GW37DP2	A039GW37D	WG	N	17-Jan-05	SW8260B	TCE	Trichloroethylene (TCE)	657	=	3.6	50	ug/L

SampleID	StationID	Matrix	SampleType	DateCollected	Method	ParamID	Paramname	AnaValue	ProjQual	MDL	RL	Units
039GW37DP2	A039GW37D	WG	N	17-Jan-05	SW8260B	VC	Vinyl chloride	28.6	J	5.5	100	ug/L
039GW37DP2A	A039GW37D	WG	N	05-Apr-05	SW8260B	DCE11	1,1-Dichloroethene	18.4	=	0.3	5	ug/L
039GW37DP2ADL	A039GW37D	WG	LR	05-Apr-05	SW8260B	DCE12C	cis-1,2-Dichloroethylene	859	=	3	50	ug/L
039GW37DP2A	A039GW37D	WG	N	05-Apr-05	SW8260B	PCE	Tetrachloroethylene (PCE)	16.8	=	0.25	5	ug/L
039GW37DP2A	A039GW37D	WG	N	05-Apr-05	E415.1	TOC	Total Organic Carbon	3.83	=	0.074	0.2	mg/L
039GW37DP2A	A039GW37D	WG	N	05-Apr-05	SW8260B	DCE12T	trans-1,2-Dichloroethene	5.2	=	0.3	5	ug/L
039GW37DP2ADL	A039GW37D	WG	LR	05-Apr-05	SW8260B	TCE	Trichloroethylene (TCE)	683	=	2.5	50	ug/L
039GW37DP2A	A039GW37D	WG	N	05-Apr-05	SW8260B	VC	Vinyl chloride	26.5	=	0.5	10	ug/L
039GW37DQ1	A039GW37D	WG	N	09-May-05	SW8260B	DCE11	1,1-Dichloroethene	18.5	=	0.3	5	ug/L
039GW37DQ1DL	A039GW37D	WG	LR	09-May-05	SW8260B	DCE12C	cis-1,2-Dichloroethylene	806	=	3	50	ug/L
039GW37DQ1	A039GW37D	WG	N	09-May-05	SW8260B	PCE	Tetrachloroethylene (PCE)	16.5	=	0.25	5	ug/L
039GW37DQ1	A039GW37D	WG	N	09-May-05	E415.1	TOC	Total Organic Carbon	3.7	=	0.074	0.2	mg/L
039GW37DQ1	A039GW37D	WG	N	09-May-05	SW8260B	DCE12T	trans-1,2-Dichloroethene	5.2	=	0.3	5	ug/L
039GW37DQ1DL	A039GW37D	WG	LR	09-May-05	SW8260B	TCE	Trichloroethylene (TCE)	682	=	2.5	50	ug/L
039GW37DQ1	A039GW37D	WG	N	09-May-05	SW8260B	VC	Vinyl chloride	29.3	=	0.5	10	ug/L
039GW37DQ2	A039GW37D	WG	N	14-Jun-05	E415.1	TOC	Total Organic Carbon	4.96	=	0.074	0.2	mg/L
039GW37DQ4	A039GW37D	WG	N	29-Jul-05	E415.1	TOC	Total Organic Carbon	5.68	=	0.074	0.2	mg/L
039GW37DQ5	A039GW37D	WG	N	01-Sep-05	E415.1	TOC	Total Organic Carbon	60.6	=	0.74	10	mg/L
039GW37DQ7	A039GW37D	WG	N	30-Nov-05	SW8260B	DCE11	1,1-Dichloroethene	21	=	3	10	ug/L
039GW37DQ7	A039GW37D	WG	N	30-Nov-05	E310.1	ALK	Alkalinity, Total (as CaCO3)	620	=	1.45	2	mg/L
039GW37DQ7	A039GW37D	WG	N	30-Nov-05	E300	BR	Bromide	37.5	=	0.82	4	mg/L
039GW37DQ7	A039GW37D	WG	N	30-Nov-05	SW8260B	DCE12C	cis-1,2-Dichloroethylene	759	=	3	10	ug/L
039GW37DQ7	A039GW37D	WG	N	30-Nov-05	SW8260B	PCE	Tetrachloroethylene (PCE)	7.9	J	2.5	10	ug/L
039GW37DQ7	A039GW37D	WG	N	30-Nov-05	E415.1	TOC	Total Organic Carbon	225	=	7.4	100	mg/L
039GW37DQ7	A039GW37D	WG	N	30-Nov-05	SW8260B	DCE12T	trans-1,2-Dichloroethene	4.6	J	3	10	ug/L
039GW37DQ7	A039GW37D	WG	N	30-Nov-05	SW8260B	TCE	Trichloroethylene (TCE)	353	=	2.5	10	ug/L
039GW37DQ7	A039GW37D	WG	N	30-Nov-05	SW8260B	VC	Vinyl chloride	21.8	=	5	10	ug/L
039GW37DR2	A039GW37D	WG	N	13-Jul-06	SW8260B	TCA111	1,1,1-Trichloroethane	10	U	3	10	ug/L
039GW37DR2	A039GW37D	WG	N	13-Jul-06	SW8260B	PCA	1,1,2,2-Tetrachloroethane	10	U	2.5	10	ug/L
039GW37DR2	A039GW37D	WG	N	13-Jul-06	SW8260B	TCA112	1,1,2-Trichloroethane	10	U	2.5	10	ug/L
039GW37DR2	A039GW37D	WG	N	13-Jul-06	SW8260B	DCA11	1,1-Dichloroethane	3.8	J	3	10	ug/L
039GW37DR2	A039GW37D	WG	N	13-Jul-06	SW8260B	DCE11	1,1-Dichloroethene	9.8	J	3	10	ug/L
039GW37DR2	A039GW37D	WG	N	13-Jul-06	SW8260B	TCB123	1,2,3-Trichlorobenzene	10	U	3	10	ug/L
039GW37DR2	A039GW37D	WG	N	13-Jul-06	SW8260B	TCB124	1,2,4-Trichlorobenzene	10	U	3	10	ug/L
039GW37DR2	A039GW37D	WG	N	13-Jul-06	SW8260B	DCBZ12	1,2-Dichlorobenzene	10	U	2.5	10	ug/L
039GW37DR2	A039GW37D	WG	N	13-Jul-06	SW8260B	DCA12	1,2-Dichloroethane	10	U	2.5	10	ug/L

SampleID	StationID	Matrix	SampleType	DateCollected	Method	ParamID	Paramname	AnaValue	ProjQual	MDL	RL	Units
039GW37DR2	A039GW37D	WG	N	13-Jul-06	SW8260B	DCE12TOT	1,2-Dichloroethene (total)	625	=	3	10	ug/L
039GW37DR2	A039GW37D	WG	N	13-Jul-06	SW8260B	DCPA12	1,2-Dichloropropane	10	U	2.5	10	ug/L
039GW37DR2	A039GW37D	WG	N	13-Jul-06	SW8260B	DCBZ13	1,3-Dichlorobenzene	10	U	2.5	10	ug/L
039GW37DR2	A039GW37D	WG	N	13-Jul-06	SW8260B	DCBZ14	1,4-Dichlorobenzene	10	U	2.5	10	ug/L
039GW37DR2	A039GW37D	WG	N	13-Jul-06	SW8260B	CEVETH	2-Chloroethyl vinyl ether	50	UJ	15	50	ug/L
039GW37DR2	A039GW37D	WG	N	13-Jul-06	SW8260B	HXO2	2-Hexanone	100	U	12.5	100	ug/L
039GW37DR2	A039GW37D	WG	N	13-Jul-06	SW8260B	ACE	Acetone	100	U	12.5	100	ug/L
039GW37DR2	A039GW37D	WG	N	13-Jul-06	SW8260B	BZ	Benzene	10	U	3	10	ug/L
039GW37DR2	A039GW37D	WG	N	13-Jul-06	SW8260B	BDCME	Bromodichloromethane	10	U	2.5	10	ug/L
039GW37DR2	A039GW37D	WG	N	13-Jul-06	SW8260B	TBME	Bromoform	10	U	2.5	10	ug/L
039GW37DR2	A039GW37D	WG	N	13-Jul-06	SW8260B	BRME	Bromomethane	10	U	5	10	ug/L
039GW37DR2	A039GW37D	WG	N	13-Jul-06	SW8260B	CDS	Carbon Disulfide	52.4	=	12.5	50	ug/L
039GW37DR2	A039GW37D	WG	N	13-Jul-06	SW8260B	CTCL	Carbon Tetrachloride	10	U	2.5	10	ug/L
039GW37DR2	A039GW37D	WG	N	13-Jul-06	SW8260B	CLBZ	Chlorobenzene	10	U	2.5	10	ug/L
039GW37DR2	A039GW37D	WG	N	13-Jul-06	SW8260B	CLEA	Chloroethane	10	U	5	10	ug/L
039GW37DR2	A039GW37D	WG	N	13-Jul-06	SW8260B	TCLME	Chloroform	10	U	2.5	10	ug/L
039GW37DR2	A039GW37D	WG	N	13-Jul-06	SW8260B	CLME	Chloromethane	10	U	5	10	ug/L
039GW37DR2	A039GW37D	WG	N	13-Jul-06	SW8260B	DCE12C	cis-1,2-Dichloroethylene	622	=	3	10	ug/L
039GW37DR2	A039GW37D	WG	N	13-Jul-06	SW8260B	DCP13C	cis-1,3-Dichloropropene	10	U	2.5	10	ug/L
039GW37DR2	A039GW37D	WG	N	13-Jul-06	SW8260B	DBCME	Dibromochloromethane	10	U	2.5	10	ug/L
039GW37DR2	A039GW37D	WG	N	13-Jul-06	SW8260B	EBZ	Ethylbenzene	10	U	2.5	10	ug/L
039GW37DR2	A039GW37D	WG	N	13-Jul-06	SW8260B	XYLMP	m+p Xylene	20	U	2.5	20	ug/L
039GW37DR2	A039GW37D	WG	N	13-Jul-06	SW8260B	MEK	Methyl ethyl ketone (2-Butanone)	25.2	J	12.5	100	ug/L
039GW37DR2	A039GW37D	WG	N	13-Jul-06	SW8260B	MIBK	Methyl isobutyl ketone (4-Methyl-2-pentanone)	100	U	12.5	100	ug/L
039GW37DR2	A039GW37D	WG	N	13-Jul-06	SW8260B	MTLNCL	Methylene Chloride	50	U	20	50	ug/L
039GW37DR2	A039GW37D	WG	N	13-Jul-06	SW8260B	XYLO	o-Xylene	10	U	2.5	10	ug/L
039GW37DR2	A039GW37D	WG	N	13-Jul-06	SW8260B	STY	Styrene	10	U	2.5	10	ug/L
039GW37DR2	A039GW37D	WG	N	13-Jul-06	SW8260B	PCE	Tetrachloroethylene (PCE)	10	U	2.5	10	ug/L
039GW37DR2	A039GW37D	WG	N	13-Jul-06	SW8260B	BZME	Toluene	10	U	2.5	10	ug/L
039GW37DR2	A039GW37D	WG	N	13-Jul-06	SW8260B	DCE12T	trans-1,2-Dichloroethene	3.4	J	3	10	ug/L
039GW37DR2	A039GW37D	WG	N	13-Jul-06	SW8260B	DCP13T	trans-1,3-Dichloropropene	10	U	2.5	10	ug/L
039GW37DR2	A039GW37D	WG	N	13-Jul-06	SW8260B	TCE	Trichloroethylene (TCE)	58.8	=	2.5	10	ug/L
039GW37DR2	A039GW37D	WG	N	13-Jul-06	SW8260B	VA	Vinyl acetate	50	U	15	50	ug/L
039GW37DR2	A039GW37D	WG	N	13-Jul-06	SW8260B	VC	Vinyl chloride	13.3	=	5	10	ug/L
039GW37DR2	A039GW37D	WG	N	13-Jul-06	SW8260B	XYLENES	Xylenes, Total	30	U	2.5	30	ug/L

SampleID	StationID	Matrix	SampleType	DateCollected	Method	ParamID	Paramname	AnaValue	ProjQual	MDL	RL	Units
039GW37DR3	A039GW37D	WG	N	17-Aug-06	E415.1	TOC	Total Organic Carbon	1120	J	330	1000	mg/L
039GW37DR4	A039GW37D	WG	N	19-Sep-06	E415.1	TOC	Total Organic Carbon	581	=	33	100	mg/L
039GW37DR5	A039GW37D	WG	N	30-Oct-06	SW8260B	DCE11	1,1-Dichloroethene	8.8	=	0.3	5	ug/L
039GW37DR5DL	A039GW37D	WG	LR	30-Oct-06	SW8260B	DCE12TOT	1,2-Dichloroethene (total)	530	=	3	50	ug/L
039GW37DR5DL	A039GW37D	WG	LR	30-Oct-06	SW8260B	DCE12C	cis-1,2-Dichloroethylene	530	=	3	50	ug/L
039GW37DR5	A039GW37D	WG	N	30-Oct-06	SW8260B	PCE	Tetrachloroethylene (PCE)	1.5	J	0.25	5	ug/L
039GW37DR5	A039GW37D	WG	N	30-Oct-06	E415.1	TOC	Total Organic Carbon	470	=	16.5	50	mg/L
039GW37DR5	A039GW37D	WG	N	30-Oct-06	SW8260B	DCE12T	trans-1,2-Dichloroethene	3	J	0.3	5	ug/L
039GW37DR5	A039GW37D	WG	N	30-Oct-06	SW8260B	TCE	Trichloroethylene (TCE)	82.7	=	0.25	5	ug/L
039GW37DR5	A039GW37D	WG	N	30-Oct-06	SW8260B	VC	Vinyl chloride	13	=	0.5	10	ug/L
039GW37DR7	A039GW37D	WG	N	05-Dec-06	E415.1	TOC	Total Organic Carbon	1160	=	165	500	mg/L
039GW38DP2	A039GW38D	WG	N	17-Jan-05	SW8260B	DCE11	1,1-Dichloroethene	12.1	J	2.05	25	ug/L
039GW38DP2	A039GW38D	WG	N	17-Jan-05	E310.1	ALK	Alkalinity, Total (as CaCO3)	161	=	1.45	2	mg/L
039GW38DP2	A039GW38D	WG	N	17-Jan-05	E300	BR	Bromide	0.818	=	0.0978	0.2	mg/L
039GW38DP2	A039GW38D	WG	N	17-Jan-05	SW8260B	DCE12C	cis-1,2-Dichloroethylene	396	=	1.5	25	ug/L
039GW38DP2	A039GW38D	WG	N	17-Jan-05	SW6010B	DISSFE	Iron, Dissolved	10500	=	5.66	100	ug/L
039GW38DP2	A039GW38D	WG	N	17-Jan-05	SW6010B	DISSMN	Manganese, Dissolved	487	=	0.087	15	ug/L
039GW38DP2	A039GW38D	WG	N	17-Jan-05	E300	SO4	Sulfate (as SO4)	124	=	1.93	4	mg/L
039GW38DP2	A039GW38D	WG	N	17-Jan-05	E376.2	S	Sulfide	0.0248	UJ	0.0248	0.1	mg/L
039GW38DP2	A039GW38D	WG	N	17-Jan-05	SW8260B	PCE	Tetrachloroethylene (PCE)	7	J	1.65	25	ug/L
039GW38DP2	A039GW38D	WG	N	17-Jan-05	E415.1	TOC	Total Organic Carbon	4.36	U	0.025	0.2	mg/L
039GW38DP2	A039GW38D	WG	N	17-Jan-05	SW8260B	DCE12T	trans-1,2-Dichloroethene	2.7	J	1.85	25	ug/L
039GW38DP2	A039GW38D	WG	N	17-Jan-05	SW8260B	TCE	Trichloroethylene (TCE)	240	=	1.8	25	ug/L
039GW38DP2	A039GW38D	WG	N	17-Jan-05	SW8260B	VC	Vinyl chloride	18.3	J	2.75	50	ug/L
039GW38DQ2	A039GW38D	WG	N	14-Jun-05	E415.1	TOC	Total Organic Carbon	9.08	=	0.074	0.2	mg/L
039GW38DQ7	A039GW38D	WG	N	30-Nov-05	SW8260B	DCE11	1,1-Dichloroethene	12.4	=	2.4	8	ug/L
039HW38DQ7	A039GW38D	WG	FD	30-Nov-05	SW8260B	DCE11	1,1-Dichloroethene	12	=	2.4	8	ug/L
039GW38DQ7	A039GW38D	WG	N	30-Nov-05	E310.1	ALK	Alkalinity, Total (as CaCO3)	910	=	1.45	2	mg/L
039HW38DQ7	A039GW38D	WG	FD	30-Nov-05	E310.1	ALK	Alkalinity, Total (as CaCO3)	895	=	1.45	2	mg/L
039GW38DQ7	A039GW38D	WG	N	30-Nov-05	E300	BR	Bromide	64.4	=	0.82	4	mg/L
039HW38DQ7	A039GW38D	WG	FD	30-Nov-05	E300	BR	Bromide	64.1	=	0.82	4	mg/L
039GW38DQ7	A039GW38D	WG	N	30-Nov-05	SW8260B	DCE12C	cis-1,2-Dichloroethylene	412	=	2.4	8	ug/L
039GW38DQ7	A039GW38D	WG	N	30-Nov-05	SW8260B	PCE	Tetrachloroethylene (PCE)	8	U	2	8	ug/L
039HW38DQ7	A039GW38D	WG	FD	30-Nov-05	SW8260B	PCE	Tetrachloroethylene (PCE)	8	U	2	8	ug/L
039GW38DQ7	A039GW38D	WG	N	30-Nov-05	E415.1	TOC	Total Organic Carbon	165	=	3.7	50	mg/L
039GW38DQ7	A039GW38D	WG	N	30-Nov-05	SW8260B	DCE12T	trans-1,2-Dichloroethene	8	U	2.4	8	ug/L

SampleID	StationID	Matrix	SampleType	DateCollected	Method	ParamID	Paramname	AnaValue	ProjQual	MDL	RL	Units
039HW38DQ7	A039GW38D	WG	FD	30-Nov-05	SW8260B	DCE12T	trans-1,2-Dichloroethene	8	U	2.4	8	ug/L
039GW38DQ7	A039GW38D	WG	N	30-Nov-05	SW8260B	TCE	Trichloroethylene (TCE)	77.2	=	2	8	ug/L
039GW38DQ7	A039GW38D	WG	N	30-Nov-05	SW8260B	VC	Vinyl chloride	10.4	=	4	8	ug/L
039GW38DR2	A039GW38D	WG	N	13-Jul-06	SW8260B	TCA111	1,1,1-Trichloroethane	1	U	0.3	1	ug/L
039GW38DR2	A039GW38D	WG	N	13-Jul-06	SW8260B	PCA	1,1,2,2-Tetrachloroethane	1	U	0.25	1	ug/L
039GW38DR2	A039GW38D	WG	N	13-Jul-06	SW8260B	TCA112	1,1,2-Trichloroethane	1	U	0.25	1	ug/L
039GW38DR2	A039GW38D	WG	N	13-Jul-06	SW8260B	DCA11	1,1-Dichloroethane	0.86	J	0.3	1	ug/L
039GW38DR2	A039GW38D	WG	N	13-Jul-06	SW8260B	DCE11	1,1-Dichloroethene	3	=	0.3	1	ug/L
039GW38DR2	A039GW38D	WG	N	13-Jul-06	SW8260B	TCB123	1,2,3-Trichlorobenzene	1	U	0.3	1	ug/L
039GW38DR2	A039GW38D	WG	N	13-Jul-06	SW8260B	TCB124	1,2,4-Trichlorobenzene	1	U	0.3	1	ug/L
039GW38DR2	A039GW38D	WG	N	13-Jul-06	SW8260B	DCBZ12	1,2-Dichlorobenzene	1	U	0.25	1	ug/L
039GW38DR2	A039GW38D	WG	N	13-Jul-06	SW8260B	DCA12	1,2-Dichloroethane	1	U	0.25	1	ug/L
039GW38DR2	A039GW38D	WG	N	13-Jul-06	SW8260B	DCE12TOT	1,2-Dichloroethene (total)	182	=	0.3	1	ug/L
039GW38DR2	A039GW38D	WG	N	13-Jul-06	SW8260B	DCPA12	1,2-Dichloropropane	1	U	0.25	1	ug/L
039GW38DR2	A039GW38D	WG	N	13-Jul-06	SW8260B	DCBZ13	1,3-Dichlorobenzene	1	U	0.25	1	ug/L
039GW38DR2	A039GW38D	WG	N	13-Jul-06	SW8260B	DCBZ14	1,4-Dichlorobenzene	1	U	0.25	1	ug/L
039GW38DR2	A039GW38D	WG	N	13-Jul-06	SW8260B	CEVETH	2-Chloroethyl vinyl ether	5	UJ	1.5	5	ug/L
039GW38DR2	A039GW38D	WG	N	13-Jul-06	SW8260B	HXO2	2-Hexanone	10	U	1.25	10	ug/L
039GW38DR2	A039GW38D	WG	N	13-Jul-06	SW8260B	ACE	Acetone	10	U	1.25	10	ug/L
039GW38DR2	A039GW38D	WG	N	13-Jul-06	SW8260B	BZ	Benzene	0.58	J	0.3	1	ug/L
039GW38DR2	A039GW38D	WG	N	13-Jul-06	SW8260B	BDCME	Bromodichloromethane	1	U	0.25	1	ug/L
039GW38DR2	A039GW38D	WG	N	13-Jul-06	SW8260B	TBME	Bromoform	1	U	0.25	1	ug/L
039GW38DR2	A039GW38D	WG	N	13-Jul-06	SW8260B	BRME	Bromomethane	1	U	0.5	1	ug/L
039GW38DR2	A039GW38D	WG	N	13-Jul-06	SW8260B	CDS	Carbon Disulfide	1.6	J	1.25	5	ug/L
039GW38DR2	A039GW38D	WG	N	13-Jul-06	SW8260B	CTCL	Carbon Tetrachloride	1	U	0.25	1	ug/L
039GW38DR2	A039GW38D	WG	N	13-Jul-06	SW8260B	CLBZ	Chlorobenzene	1	U	0.25	1	ug/L
039GW38DR2	A039GW38D	WG	N	13-Jul-06	SW8260B	CLEA	Chloroethane	1	U	0.5	1	ug/L
039GW38DR2	A039GW38D	WG	N	13-Jul-06	SW8260B	TCLME	Chloroform	1	U	0.25	1	ug/L
039GW38DR2	A039GW38D	WG	N	13-Jul-06	SW8260B	CLME	Chloromethane	1	U	0.5	1	ug/L
039GW38DR2DL	A039GW38D	WG	LR	13-Jul-06	SW8260B	DCE12C	cis-1,2-Dichloroethylene	188	=	0.6	2	ug/L
039GW38DR2	A039GW38D	WG	N	13-Jul-06	SW8260B	DCP13C	cis-1,3-Dichloropropene	1	U	0.25	1	ug/L
039GW38DR2	A039GW38D	WG	N	13-Jul-06	SW8260B	DBCME	Dibromochloromethane	1	U	0.25	1	ug/L
039GW38DR2	A039GW38D	WG	N	13-Jul-06	SW8260B	EBZ	Ethylbenzene	1	U	0.25	1	ug/L
039GW38DR2	A039GW38D	WG	N	13-Jul-06	SW8260B	XYLMP	m+p Xylene	2	U	0.25	2	ug/L
039GW38DR2	A039GW38D	WG	N	13-Jul-06	SW8260B	MEK	Methyl ethyl ketone (2-Butanone)	31	=	1.25	10	ug/L

SampleID	StationID	Matrix	SampleType	DateCollected	Method	ParamID	Paramname	AnaValue	ProjQual	MDL	RL	Units
039GW38DR2	A039GW38D	WG	N	13-Jul-06	SW8260B	MIBK	Methyl isobutyl ketone (4-Methyl-2-pentanone)	10	U	1.25	10	ug/L
039GW38DR2	A039GW38D	WG	N	13-Jul-06	SW8260B	MTLNCL	Methylene Chloride	5	U	2	5	ug/L
039GW38DR2	A039GW38D	WG	N	13-Jul-06	SW8260B	XYLO	o-Xylene	1	U	0.25	1	ug/L
039GW38DR2	A039GW38D	WG	N	13-Jul-06	SW8260B	STY	Styrene	1	U	0.25	1	ug/L
039GW38DR2	A039GW38D	WG	N	13-Jul-06	SW8260B	PCE	Tetrachloroethylene (PCE)	1	U	0.25	1	ug/L
039GW38DR2	A039GW38D	WG	N	13-Jul-06	SW8260B	BZME	Toluene	1	U	0.25	1	ug/L
039GW38DR2	A039GW38D	WG	N	13-Jul-06	SW8260B	DCE12T	trans-1,2-Dichloroethene	1.3	=	0.3	1	ug/L
039GW38DR2	A039GW38D	WG	N	13-Jul-06	SW8260B	DCP13T	trans-1,3-Dichloropropene	1	U	0.25	1	ug/L
039GW38DR2	A039GW38D	WG	N	13-Jul-06	SW8260B	TCE	Trichloroethylene (TCE)	18.1	=	0.25	1	ug/L
039GW38DR2	A039GW38D	WG	N	13-Jul-06	SW8260B	VA	Vinyl acetate	5	U	1.5	5	ug/L
039GW38DR2	A039GW38D	WG	N	13-Jul-06	SW8260B	VC	Vinyl chloride	4	=	0.5	1	ug/L
039GW38DR2	A039GW38D	WG	N	13-Jul-06	SW8260B	XYLENES	Xylenes, Total	3	U	0.25	3	ug/L
039HW46DR2	A039GW38D	WG	FD	13-Jul-06	SW8260B	TCA111	1,1,1-Trichloroethane	1	U	0.3	1	ug/L
039HW46DR2	A039GW38D	WG	FD	13-Jul-06	SW8260B	PCA	1,1,2,2-Tetrachloroethane	1	U	0.25	1	ug/L
039HW46DR2	A039GW38D	WG	FD	13-Jul-06	SW8260B	TCA112	1,1,2-Trichloroethane	1	U	0.25	1	ug/L
039HW46DR2	A039GW38D	WG	FD	13-Jul-06	SW8260B	DCA11	1,1-Dichloroethane	2.4	=	0.3	1	ug/L
039HW46DR2	A039GW38D	WG	FD	13-Jul-06	SW8260B	DCE11	1,1-Dichloroethene	1.4	=	0.3	1	ug/L
039HW46DR2	A039GW38D	WG	FD	13-Jul-06	SW8260B	TCB123	1,2,3-Trichlorobenzene	1	U	0.3	1	ug/L
039HW46DR2	A039GW38D	WG	FD	13-Jul-06	SW8260B	TCB124	1,2,4-Trichlorobenzene	1	U	0.3	1	ug/L
039HW46DR2	A039GW38D	WG	FD	13-Jul-06	SW8260B	DCBZ12	1,2-Dichlorobenzene	1	U	0.25	1	ug/L
039HW46DR2	A039GW38D	WG	FD	13-Jul-06	SW8260B	DCA12	1,2-Dichloroethane	1	U	0.25	1	ug/L
039HW46DR2	A039GW38D	WG	FD	13-Jul-06	SW8260B	DCE12TOT	1,2-Dichloroethene (total)	104	=	0.3	1	ug/L
039HW46DR2	A039GW38D	WG	FD	13-Jul-06	SW8260B	DCPA12	1,2-Dichloropropane	1	U	0.25	1	ug/L
039HW46DR2	A039GW38D	WG	FD	13-Jul-06	SW8260B	DCBZ13	1,3-Dichlorobenzene	1	U	0.25	1	ug/L
039HW46DR2	A039GW38D	WG	FD	13-Jul-06	SW8260B	DCBZ14	1,4-Dichlorobenzene	1	U	0.25	1	ug/L
039HW46DR2	A039GW38D	WG	FD	13-Jul-06	SW8260B	CEVETH	2-Chloroethyl vinyl ether	5	UJ	1.5	5	ug/L
039HW46DR2	A039GW38D	WG	FD	13-Jul-06	SW8260B	HXO2	2-Hexanone	10	U	1.25	10	ug/L
039HW46DR2	A039GW38D	WG	FD	13-Jul-06	SW8260B	ACE	Acetone	10	U	1.25	10	ug/L
039HW46DR2	A039GW38D	WG	FD	13-Jul-06	SW8260B	BZ	Benzene	1	U	0.3	1	ug/L
039HW46DR2	A039GW38D	WG	FD	13-Jul-06	SW8260B	BDCME	Bromodichloromethane	1	U	0.25	1	ug/L
039HW46DR2	A039GW38D	WG	FD	13-Jul-06	SW8260B	TBME	Bromoform	1	U	0.25	1	ug/L
039HW46DR2	A039GW38D	WG	FD	13-Jul-06	SW8260B	BRME	Bromomethane	1	U	0.5	1	ug/L
039HW46DR2	A039GW38D	WG	FD	13-Jul-06	SW8260B	CDS	Carbon Disulfide	5	U	1.25	5	ug/L
039HW46DR2	A039GW38D	WG	FD	13-Jul-06	SW8260B	CTCL	Carbon Tetrachloride	1	U	0.25	1	ug/L
039HW46DR2	A039GW38D	WG	FD	13-Jul-06	SW8260B	CLBZ	Chlorobenzene	1	U	0.25	1	ug/L
039HW46DR2	A039GW38D	WG	FD	13-Jul-06	SW8260B	CLEA	Chloroethane	1	U	0.5	1	ug/L

SampleID	StationID	Matrix	SampleType	DateCollected	Method	ParamID	Paramname	AnaValue	ProjQual	MDL	RL	Units
039HW46DR2	A039GW38D	WG	FD	13-Jul-06	SW8260B	TCLME	Chloroform	1	U	0.25	1	ug/L
039HW46DR2	A039GW38D	WG	FD	13-Jul-06	SW8260B	CLME	Chloromethane	1	U	0.5	1	ug/L
039HW46DR2	A039GW38D	WG	FD	13-Jul-06	SW8260B	DCP13C	cis-1,3-Dichloropropene	1	U	0.25	1	ug/L
039HW46DR2	A039GW38D	WG	FD	13-Jul-06	SW8260B	DBCME	Dibromochloromethane	1	U	0.25	1	ug/L
039HW46DR2	A039GW38D	WG	FD	13-Jul-06	SW8260B	EBZ	Ethylbenzene	1	U	0.25	1	ug/L
039HW46DR2	A039GW38D	WG	FD	13-Jul-06	SW8260B	XYLMP	m+p Xylene	2	U	0.25	2	ug/L
039HW46DR2	A039GW38D	WG	FD	13-Jul-06	SW8260B	MEK	Methyl ethyl ketone (2-Butanone)	10	U	1.25	10	ug/L
039HW46DR2	A039GW38D	WG	FD	13-Jul-06	SW8260B	MIBK	Methyl isobutyl ketone (4-Methyl-2-pentanone)	10	U	1.25	10	ug/L
039HW46DR2	A039GW38D	WG	FD	13-Jul-06	SW8260B	MTLNCL	Methylene Chloride	5	U	2	5	ug/L
039HW46DR2	A039GW38D	WG	FD	13-Jul-06	SW8260B	XYLO	o-Xylene	1	U	0.25	1	ug/L
039HW46DR2	A039GW38D	WG	FD	13-Jul-06	SW8260B	STY	Styrene	1	U	0.25	1	ug/L
039HW46DR2	A039GW38D	WG	FD	13-Jul-06	SW8260B	PCE	Tetrachloroethylene (PCE)	3.1	=	0.25	1	ug/L
039HW46DR2	A039GW38D	WG	FD	13-Jul-06	SW8260B	BZME	Toluene	1	U	0.25	1	ug/L
039HW46DR2	A039GW38D	WG	FD	13-Jul-06	SW8260B	DCE12T	trans-1,2-Dichloroethene	1.2	=	0.3	1	ug/L
039HW46DR2	A039GW38D	WG	FD	13-Jul-06	SW8260B	DCP13T	trans-1,3-Dichloropropene	1	U	0.25	1	ug/L
039HW46DR2	A039GW38D	WG	FD	13-Jul-06	SW8260B	VA	Vinyl acetate	5	U	1.5	5	ug/L
039HW46DR2	A039GW38D	WG	FD	13-Jul-06	SW8260B	XYLENES	Xylenes, Total	3	U	0.25	3	ug/L
039GW38DR3	A039GW38D	WG	N	17-Aug-06	E415.1	TOC	Total Organic Carbon	847	J	82.5	250	mg/L
039GW38DR4	A039GW38D	WG	N	19-Sep-06	E415.1	TOC	Total Organic Carbon	876	=	33	100	mg/L
039GW38DR5	A039GW38D	WG	N	30-Oct-06	SW8260B	DCE11	1,1-Dichloroethene	2.6	J	0.3	5	ug/L
039HW38DR5	A039GW38D	WG	FD	30-Oct-06	SW8260B	DCE11	1,1-Dichloroethene	2.5	J	0.3	5	ug/L
039GW38DR5	A039GW38D	WG	N	30-Oct-06	SW8260B	DCE12TOT	1,2-Dichloroethene (total)	148	=	0.3	5	ug/L
039HW38DR5	A039GW38D	WG	FD	30-Oct-06	SW8260B	DCE12TOT	1,2-Dichloroethene (total)	149	=	0.3	5	ug/L
039GW38DR5DL	A039GW38D	WG	LR	30-Oct-06	SW8260B	DCE12C	cis-1,2-Dichloroethylene	152	=	0.6	10	ug/L
039GW38DR5	A039GW38D	WG	N	30-Oct-06	SW8260B	PCE	Tetrachloroethylene (PCE)	5	U	0.25	5	ug/L
039HW38DR5	A039GW38D	WG	FD	30-Oct-06	SW8260B	PCE	Tetrachloroethylene (PCE)	5	U	0.25	5	ug/L
039GW38DR5	A039GW38D	WG	N	30-Oct-06	E415.1	TOC	Total Organic Carbon	906	=	33	100	mg/L
039GW38DR5	A039GW38D	WG	N	30-Oct-06	SW8260B	DCE12T	trans-1,2-Dichloroethene	1.6	J	0.3	5	ug/L
039HW38DR5	A039GW38D	WG	FD	30-Oct-06	SW8260B	DCE12T	trans-1,2-Dichloroethene	1.6	J	0.3	5	ug/L
039GW38DR5	A039GW38D	WG	N	30-Oct-06	SW8260B	TCE	Trichloroethylene (TCE)	1.5	J	0.25	5	ug/L
039GW38DR5	A039GW38D	WG	N	30-Oct-06	SW8260B	VC	Vinyl chloride	3.1	J	0.5	10	ug/L
039GW38DR7	A039GW38D	WG	N	05-Dec-06	E415.1	TOC	Total Organic Carbon	909	=	82.5	250	mg/L
039GW45DP2	A039GW45D	WG	N	17-Jan-05	SW8260B	DCE11	1,1-Dichloroethene	19.8	J	4.1	50	ug/L
039GW45DP2	A039GW45D	WG	N	17-Jan-05	E310.1	ALK	Alkalinity, Total (as CaCO3)	233	=	1.45	2	mg/L
039GW45DP2	A039GW45D	WG	N	17-Jan-05	E300	BR	Bromide	0.274	=	0.0978	0.2	mg/L

SampleID	StationID	Matrix	SampleType	DateCollected	Method	ParamID	Paramname	AnaValue	ProjQual	MDL	RL	Units
039GW45DP2	A039GW45D	WG	N	17-Jan-05	SW8260B	DCE12C	cis-1,2-Dichloroethylene	711	=	3	50	ug/L
039GW45DP2	A039GW45D	WG	N	17-Jan-05	SW6010B	DISSFE	Iron, Dissolved	9780	=	5.66	100	ug/L
039GW45DP2	A039GW45D	WG	N	17-Jan-05	SW6010B	DISSMN	Manganese, Dissolved	368	=	0.087	15	ug/L
039GW45DP2	A039GW45D	WG	N	17-Jan-05	E300	SO4	Sulfate (as SO4)	102	=	1.93	4	mg/L
039GW45DP2	A039GW45D	WG	N	17-Jan-05	E376.2	S	Sulfide	0.0248	UJ	0.0248	0.1	mg/L
039GW45DP2	A039GW45D	WG	N	17-Jan-05	SW8260B	PCE	Tetrachloroethylene (PCE)	6.8	J	3.3	50	ug/L
039GW45DP2	A039GW45D	WG	N	17-Jan-05	E415.1	TOC	Total Organic Carbon	5.6	U	0.025	0.2	mg/L
039GW45DP2	A039GW45D	WG	N	17-Jan-05	SW8260B	DCE12T	trans-1,2-Dichloroethene	4	J	3.7	50	ug/L
039GW45DP2	A039GW45D	WG	N	17-Jan-05	SW8260B	TCE	Trichloroethylene (TCE)	733	=	3.6	50	ug/L
039GW45DP2	A039GW45D	WG	N	17-Jan-05	SW8260B	VC	Vinyl chloride	22.8	J	5.5	100	ug/L
039GW45DQ2	A039GW45D	WG	N	14-Jun-05	E415.1	TOC	Total Organic Carbon	5.67	=	0.074	0.2	mg/L
039GW45DQ7	A039GW45D	WG	N	30-Nov-05	SW8260B	DCE11	1,1-Dichloroethene	30.2	=	7.5	25	ug/L
039GW45DQ7	A039GW45D	WG	N	30-Nov-05	E310.1	ALK	Alkalinity, Total (as CaCO3)	188	=	1.45	2	mg/L
039GW45DQ7	A039GW45D	WG	N	30-Nov-05	E300	BR	Bromide	1.1	=	0.041	0.2	mg/L
039GW45DQ7	A039GW45D	WG	N	30-Nov-05	SW8260B	DCE12C	cis-1,2-Dichloroethylene	861	=	7.5	25	ug/L
039GW45DQ7	A039GW45D	WG	N	30-Nov-05	SW8260B	PCE	Tetrachloroethylene (PCE)	9.2	J	6.25	25	ug/L
039GW45DQ7	A039GW45D	WG	N	30-Nov-05	E415.1	TOC	Total Organic Carbon	4.05	=	0.074	1	mg/L
039GW45DQ7	A039GW45D	WG	N	30-Nov-05	SW8260B	DCE12T	trans-1,2-Dichloroethene	25	U	7.5	25	ug/L
039GW45DQ7	A039GW45D	WG	N	30-Nov-05	SW8260B	TCE	Trichloroethylene (TCE)	624	=	6.25	25	ug/L
039GW45DQ7	A039GW45D	WG	N	30-Nov-05	SW8260B	VC	Vinyl chloride	29.6	=	12.5	25	ug/L
039GW45DR2	A039GW45D	WG	N	13-Jul-06	SW8260B	TCA111	1,1,1-Trichloroethane	10	U	3	10	ug/L
039GW45DR2	A039GW45D	WG	N	13-Jul-06	SW8260B	PCA	1,1,2,2-Tetrachloroethane	10	U	2.5	10	ug/L
039GW45DR2	A039GW45D	WG	N	13-Jul-06	SW8260B	TCA112	1,1,2-Trichloroethane	10	U	2.5	10	ug/L
039GW45DR2	A039GW45D	WG	N	13-Jul-06	SW8260B	DCA11	1,1-Dichloroethane	13.2	=	3	10	ug/L
039GW45DR2	A039GW45D	WG	N	13-Jul-06	SW8260B	DCE11	1,1-Dichloroethene	21.1	=	3	10	ug/L
039GW45DR2	A039GW45D	WG	N	13-Jul-06	SW8260B	TCB123	1,2,3-Trichlorobenzene	10	U	3	10	ug/L
039GW45DR2	A039GW45D	WG	N	13-Jul-06	SW8260B	TCB124	1,2,4-Trichlorobenzene	10	U	3	10	ug/L
039GW45DR2	A039GW45D	WG	N	13-Jul-06	SW8260B	DCBZ12	1,2-Dichlorobenzene	10	U	2.5	10	ug/L
039GW45DR2	A039GW45D	WG	N	13-Jul-06	SW8260B	DCA12	1,2-Dichloroethane	10	U	2.5	10	ug/L
039GW45DR2	A039GW45D	WG	N	13-Jul-06	SW8260B	DCE12TOT	1,2-Dichloroethene (total)	807	=	3	10	ug/L
039GW45DR2	A039GW45D	WG	N	13-Jul-06	SW8260B	DCPA12	1,2-Dichloropropane	10	U	2.5	10	ug/L
039GW45DR2	A039GW45D	WG	N	13-Jul-06	SW8260B	DCBZ13	1,3-Dichlorobenzene	10	U	2.5	10	ug/L
039GW45DR2	A039GW45D	WG	N	13-Jul-06	SW8260B	DCBZ14	1,4-Dichlorobenzene	10	U	2.5	10	ug/L
039GW45DR2	A039GW45D	WG	N	13-Jul-06	SW8260B	CEVETH	2-Chloroethyl vinyl ether	50	UJ	15	50	ug/L
039GW45DR2	A039GW45D	WG	N	13-Jul-06	SW8260B	HXO2	2-Hexanone	100	U	12.5	100	ug/L
039GW45DR2	A039GW45D	WG	N	13-Jul-06	SW8260B	ACE	Acetone	100	U	12.5	100	ug/L

SampleID	StationID	Matrix	SampleType	DateCollected	Method	ParamID	Paramname	AnaValue	ProjQual	MDL	RL	Units
039GW45DR2	A039GW45D	WG	N	13-Jul-06	SW8260B	BZ	Benzene	10	U	3	10	ug/L
039GW45DR2	A039GW45D	WG	N	13-Jul-06	SW8260B	BDCME	Bromodichloromethane	10	U	2.5	10	ug/L
039GW45DR2	A039GW45D	WG	N	13-Jul-06	SW8260B	TBME	Bromoform	10	U	2.5	10	ug/L
039GW45DR2	A039GW45D	WG	N	13-Jul-06	SW8260B	BRME	Bromomethane	10	U	5	10	ug/L
039GW45DR2	A039GW45D	WG	N	13-Jul-06	SW8260B	CDS	Carbon Disulfide	15.7	J	12.5	50	ug/L
039GW45DR2	A039GW45D	WG	N	13-Jul-06	SW8260B	CTCL	Carbon Tetrachloride	10	U	2.5	10	ug/L
039GW45DR2	A039GW45D	WG	N	13-Jul-06	SW8260B	CLBZ	Chlorobenzene	10	U	2.5	10	ug/L
039GW45DR2	A039GW45D	WG	N	13-Jul-06	SW8260B	CLEA	Chloroethane	10	U	5	10	ug/L
039GW45DR2	A039GW45D	WG	N	13-Jul-06	SW8260B	TCLME	Chloroform	10	U	2.5	10	ug/L
039GW45DR2	A039GW45D	WG	N	13-Jul-06	SW8260B	CLME	Chloromethane	10	U	5	10	ug/L
039GW45DR2	A039GW45D	WG	N	13-Jul-06	SW8260B	DCE12C	cis-1,2-Dichloroethylene	799	=	3	10	ug/L
039GW45DR2	A039GW45D	WG	N	13-Jul-06	SW8260B	DCP13C	cis-1,3-Dichloropropene	10	U	2.5	10	ug/L
039GW45DR2	A039GW45D	WG	N	13-Jul-06	SW8260B	DBCME	Dibromochloromethane	10	U	2.5	10	ug/L
039GW45DR2	A039GW45D	WG	N	13-Jul-06	SW8260B	EBZ	Ethylbenzene	10	U	2.5	10	ug/L
039GW45DR2	A039GW45D	WG	N	13-Jul-06	SW8260B	XYLMP	m+p Xylene	20	U	2.5	20	ug/L
039GW45DR2	A039GW45D	WG	N	13-Jul-06	SW8260B	MEK	Methyl ethyl ketone (2-Butanone)	100	U	12.5	100	ug/L
039GW45DR2	A039GW45D	WG	N	13-Jul-06	SW8260B	MIBK	Methyl isobutyl ketone (4-Methyl-2-pentanone)	100	U	12.5	100	ug/L
039GW45DR2	A039GW45D	WG	N	13-Jul-06	SW8260B	MTLNCL	Methylene Chloride	50	U	20	50	ug/L
039GW45DR2	A039GW45D	WG	N	13-Jul-06	SW8260B	XYLO	o-Xylene	10	U	2.5	10	ug/L
039GW45DR2	A039GW45D	WG	N	13-Jul-06	SW8260B	STY	Styrene	10	U	2.5	10	ug/L
039GW45DR2	A039GW45D	WG	N	13-Jul-06	SW8260B	PCE	Tetrachloroethylene (PCE)	13.2	=	2.5	10	ug/L
039GW45DR2	A039GW45D	WG	N	13-Jul-06	SW8260B	BZME	Toluene	10	U	2.5	10	ug/L
039GW45DR2	A039GW45D	WG	N	13-Jul-06	SW8260B	DCE12T	trans-1,2-Dichloroethene	7.4	J	3	10	ug/L
039GW45DR2	A039GW45D	WG	N	13-Jul-06	SW8260B	DCP13T	trans-1,3-Dichloropropene	10	U	2.5	10	ug/L
039GW45DR2	A039GW45D	WG	N	13-Jul-06	SW8260B	TCE	Trichloroethylene (TCE)	576	=	2.5	10	ug/L
039GW45DR2	A039GW45D	WG	N	13-Jul-06	SW8260B	VA	Vinyl acetate	50	U	15	50	ug/L
039GW45DR2	A039GW45D	WG	N	13-Jul-06	SW8260B	VC	Vinyl chloride	29.8	=	5	10	ug/L
039GW45DR2	A039GW45D	WG	N	13-Jul-06	SW8260B	XYLENES	Xylenes, Total	30	U	2.5	30	ug/L
039GW45DR3	A039GW45D	WG	N	17-Aug-06	E415.1	TOC	Total Organic Carbon	83.4	J	6.6	20	mg/L
039GW45DR4	A039GW45D	WG	N	19-Sep-06	E415.1	TOC	Total Organic Carbon	131	=	33	100	mg/L
039GW45DR5	A039GW45D	WG	N	30-Oct-06	SW8260B	DCE11	1,1-Dichloroethene	18.8	=	0.3	5	ug/L
039GW45DR5DL	A039GW45D	WG	LR	30-Oct-06	SW8260B	DCE12TOT	1,2-Dichloroethene (total)	761	=	3	50	ug/L
039GW45DR5DL	A039GW45D	WG	LR	30-Oct-06	SW8260B	DCE12C	cis-1,2-Dichloroethylene	761	=	3	50	ug/L
039GW45DR5	A039GW45D	WG	N	30-Oct-06	SW8260B	PCE	Tetrachloroethylene (PCE)	3.5	J	0.25	5	ug/L
039GW45DR5	A039GW45D	WG	N	30-Oct-06	E415.1	TOC	Total Organic Carbon	290	=	16.5	50	mg/L

SampleID	StationID	Matrix	SampleType	DateCollected	Method	ParamID	Paramname	AnaValue	ProjQual	MDL	RL	Units
039GW45DR5	A039GW45D	WG	N	30-Oct-06	SW8260B	DCE12T	trans-1,2-Dichloroethene	5.8	=	0.3	5	ug/L
039GW45DR5DL	A039GW45D	WG	LR	30-Oct-06	SW8260B	TCE	Trichloroethylene (TCE)	340	=	2.5	50	ug/L
039GW45DR5	A039GW45D	WG	N	30-Oct-06	SW8260B	VC	Vinyl chloride	26.3	=	0.5	10	ug/L
039GW45DR7	A039GW45D	WG	N	05-Dec-06	E415.1	TOC	Total Organic Carbon	317	J	165	500	mg/L
039GW46DP2	A039GW46D	WG	N	17-Jan-05	SW8260B	DCE11	1,1-Dichloroethene	1.1	J	0.41	5	ug/L
039GW46DP2	A039GW46D	WG	N	17-Jan-05	E310.1	ALK	Alkalinity, Total (as CaCO3)	70.6	U	1.45	2	mg/L
039GW46DP2	A039GW46D	WG	N	17-Jan-05	E300	BR	Bromide	0.108	J	0.0978	0.2	mg/L
039GW46DP2	A039GW46D	WG	N	17-Jan-05	SW8260B	DCE12C	cis-1,2-Dichloroethylene	53.7	=	0.3	5	ug/L
039GW46DP2	A039GW46D	WG	N	17-Jan-05	SW6010B	DISSFE	Iron, Dissolved	13900	=	5.66	100	ug/L
039GW46DP2	A039GW46D	WG	N	17-Jan-05	SW6010B	DISSMN	Manganese, Dissolved	1570	=	0.087	15	ug/L
039GW46DP2	A039GW46D	WG	N	17-Jan-05	E300	SO4	Sulfate (as SO4)	41.2	=	0.386	0.8	mg/L
039GW46DP2	A039GW46D	WG	N	17-Jan-05	E376.2	S	Sulfide	0.0248	UJ	0.0248	0.1	mg/L
039GW46DP2	A039GW46D	WG	N	17-Jan-05	SW8260B	PCE	Tetrachloroethylene (PCE)	1.6	J	0.33	5	ug/L
039GW46DP2	A039GW46D	WG	N	17-Jan-05	E415.1	TOC	Total Organic Carbon	2.16	U	0.025	0.2	mg/L
039GW46DP2	A039GW46D	WG	N	17-Jan-05	SW8260B	DCE12T	trans-1,2-Dichloroethene	0.48	J	0.37	5	ug/L
039GW46DP2	A039GW46D	WG	N	17-Jan-05	SW8260B	TCE	Trichloroethylene (TCE)	6.4	=	0.36	5	ug/L
039GW46DP2	A039GW46D	WG	N	17-Jan-05	SW8260B	VC	Vinyl chloride	3.1	J	0.55	10	ug/L
039GW46DQ2	A039GW46D	WG	N	14-Jun-05	E415.1	TOC	Total Organic Carbon	1.99	U	0.074	0.2	mg/L
039GW46DQ7	A039GW46D	WG	N	30-Nov-05	SW8260B	DCE11	1,1-Dichloroethene	1.4	=	0.3	1	ug/L
039GW46DQ7	A039GW46D	WG	N	30-Nov-05	E310.1	ALK	Alkalinity, Total (as CaCO3)	46.6	=	1.45	2	mg/L
039GW46DQ7	A039GW46D	WG	N	30-Nov-05	E300	BR	Bromide	0.244	=	0.041	0.2	mg/L
039GW46DQ7	A039GW46D	WG	N	30-Nov-05	SW8260B	DCE12C	cis-1,2-Dichloroethylene	82.7	=	0.3	1	ug/L
039GW46DQ7	A039GW46D	WG	N	30-Nov-05	SW8260B	PCE	Tetrachloroethylene (PCE)	2.5	=	0.25	1	ug/L
039GW46DQ7	A039GW46D	WG	N	30-Nov-05	E415.1	TOC	Total Organic Carbon	1.93	U	0.074	1	mg/L
039GW46DQ7	A039GW46D	WG	N	30-Nov-05	SW8260B	DCE12T	trans-1,2-Dichloroethene	0.88	J	0.3	1	ug/L
039GW46DQ7	A039GW46D	WG	N	30-Nov-05	SW8260B	TCE	Trichloroethylene (TCE)	10.1	=	0.25	1	ug/L
039GW46DQ7	A039GW46D	WG	N	30-Nov-05	SW8260B	VC	Vinyl chloride	4.1	=	0.5	1	ug/L
039GW46DR2	A039GW46D	WG	N	13-Jul-06	SW8260B	TCA111	1,1,1-Trichloroethane	1	U	0.3	1	ug/L
039GW46DR2	A039GW46D	WG	N	13-Jul-06	SW8260B	PCA	1,1,2,2-Tetrachloroethane	1	U	0.25	1	ug/L
039GW46DR2	A039GW46D	WG	N	13-Jul-06	SW8260B	TCA112	1,1,2-Trichloroethane	1	U	0.25	1	ug/L
039GW46DR2	A039GW46D	WG	N	13-Jul-06	SW8260B	DCA11	1,1-Dichloroethane	2	=	0.3	1	ug/L
039GW46DR2	A039GW46D	WG	N	13-Jul-06	SW8260B	DCE11	1,1-Dichloroethene	1.1	=	0.3	1	ug/L
039GW46DR2	A039GW46D	WG	N	13-Jul-06	SW8260B	TCB123	1,2,3-Trichlorobenzene	1	U	0.3	1	ug/L
039GW46DR2	A039GW46D	WG	N	13-Jul-06	SW8260B	TCB124	1,2,4-Trichlorobenzene	1	U	0.3	1	ug/L
039GW46DR2	A039GW46D	WG	N	13-Jul-06	SW8260B	DCBZ12	1,2-Dichlorobenzene	1	U	0.25	1	ug/L
039GW46DR2	A039GW46D	WG	N	13-Jul-06	SW8260B	DCA12	1,2-Dichloroethane	1	U	0.25	1	ug/L

SampleID	StationID	Matrix	SampleType	DateCollected	Method	ParamID	Paramname	AnaValue	ProjQual	MDL	RL	Units
039GW46DR2	A039GW46D	WG	N	13-Jul-06	SW8260B	DCE12TOT	1,2-Dichloroethene (total)	90.9	=	0.3	1	ug/L
039GW46DR2	A039GW46D	WG	N	13-Jul-06	SW8260B	DCPA12	1,2-Dichloropropane	1	U	0.25	1	ug/L
039GW46DR2	A039GW46D	WG	N	13-Jul-06	SW8260B	DCBZ13	1,3-Dichlorobenzene	1	U	0.25	1	ug/L
039GW46DR2	A039GW46D	WG	N	13-Jul-06	SW8260B	DCBZ14	1,4-Dichlorobenzene	1	U	0.25	1	ug/L
039GW46DR2	A039GW46D	WG	N	13-Jul-06	SW8260B	CEVETH	2-Chloroethyl vinyl ether	5	UJ	1.5	5	ug/L
039GW46DR2	A039GW46D	WG	N	13-Jul-06	SW8260B	HXO2	2-Hexanone	10	U	1.25	10	ug/L
039GW46DR2	A039GW46D	WG	N	13-Jul-06	SW8260B	ACE	Acetone	10	U	1.25	10	ug/L
039GW46DR2	A039GW46D	WG	N	13-Jul-06	SW8260B	BZ	Benzene	1	U	0.3	1	ug/L
039GW46DR2	A039GW46D	WG	N	13-Jul-06	SW8260B	BDCME	Bromodichloromethane	1	U	0.25	1	ug/L
039GW46DR2	A039GW46D	WG	N	13-Jul-06	SW8260B	TBME	Bromoform	1	U	0.25	1	ug/L
039GW46DR2	A039GW46D	WG	N	13-Jul-06	SW8260B	BRME	Bromomethane	1	U	0.5	1	ug/L
039GW46DR2	A039GW46D	WG	N	13-Jul-06	SW8260B	CDS	Carbon Disulfide	5	U	1.25	5	ug/L
039GW46DR2	A039GW46D	WG	N	13-Jul-06	SW8260B	CTCL	Carbon Tetrachloride	1	U	0.25	1	ug/L
039GW46DR2	A039GW46D	WG	N	13-Jul-06	SW8260B	CLBZ	Chlorobenzene	1	U	0.25	1	ug/L
039GW46DR2	A039GW46D	WG	N	13-Jul-06	SW8260B	CLEA	Chloroethane	1	U	0.5	1	ug/L
039GW46DR2	A039GW46D	WG	N	13-Jul-06	SW8260B	TCLME	Chloroform	1	U	0.25	1	ug/L
039GW46DR2	A039GW46D	WG	N	13-Jul-06	SW8260B	CLME	Chloromethane	1	U	0.5	1	ug/L
039GW46DR2	A039GW46D	WG	N	13-Jul-06	SW8260B	DCE12C	cis-1,2-Dichloroethylene	89.8	=	0.3	1	ug/L
039GW46DR2	A039GW46D	WG	N	13-Jul-06	SW8260B	DCP13C	cis-1,3-Dichloropropene	1	U	0.25	1	ug/L
039GW46DR2	A039GW46D	WG	N	13-Jul-06	SW8260B	DBCME	Dibromochloromethane	1	U	0.25	1	ug/L
039GW46DR2	A039GW46D	WG	N	13-Jul-06	SW8260B	EBZ	Ethylbenzene	1	U	0.25	1	ug/L
039GW46DR2	A039GW46D	WG	N	13-Jul-06	SW8260B	XYLMP	m+p Xylene	2	U	0.25	2	ug/L
039GW46DR2	A039GW46D	WG	N	13-Jul-06	SW8260B	MEK	Methyl ethyl ketone (2-Butanone)	10	U	1.25	10	ug/L
039GW46DR2	A039GW46D	WG	N	13-Jul-06	SW8260B	MIBK	Methyl isobutyl ketone (4-Methyl-2-pentanone)	10	U	1.25	10	ug/L
039GW46DR2	A039GW46D	WG	N	13-Jul-06	SW8260B	MTLNCL	Methylene Chloride	5	U	2	5	ug/L
039GW46DR2	A039GW46D	WG	N	13-Jul-06	SW8260B	XYLO	o-Xylene	1	U	0.25	1	ug/L
039GW46DR2	A039GW46D	WG	N	13-Jul-06	SW8260B	STY	Styrene	1	U	0.25	1	ug/L
039GW46DR2	A039GW46D	WG	N	13-Jul-06	SW8260B	PCE	Tetrachloroethylene (PCE)	2.3	=	0.25	1	ug/L
039GW46DR2	A039GW46D	WG	N	13-Jul-06	SW8260B	BZME	Toluene	1	U	0.25	1	ug/L
039GW46DR2	A039GW46D	WG	N	13-Jul-06	SW8260B	DCE12T	trans-1,2-Dichloroethene	1.1	=	0.3	1	ug/L
039GW46DR2	A039GW46D	WG	N	13-Jul-06	SW8260B	DCP13T	trans-1,3-Dichloropropene	1	U	0.25	1	ug/L
039GW46DR2	A039GW46D	WG	N	13-Jul-06	SW8260B	TCE	Trichloroethylene (TCE)	9.6	=	0.25	1	ug/L
039GW46DR2	A039GW46D	WG	N	13-Jul-06	SW8260B	VA	Vinyl acetate	5	U	1.5	5	ug/L
039GW46DR2	A039GW46D	WG	N	13-Jul-06	SW8260B	VC	Vinyl chloride	5.9	=	0.5	1	ug/L
039GW46DR2	A039GW46D	WG	N	13-Jul-06	SW8260B	XYLENES	Xylenes, Total	3	U	0.25	3	ug/L

SampleID	StationID	Matrix	SampleType	DateCollected	Method	ParamID	Paramname	AnaValue	ProjQual	MDL	RL	Units
039GW46DR3	A039GW46D	WG	N	17-Aug-06	E415.1	TOC	Total Organic Carbon	2.04	J	0.33	1	mg/L
039GW46DR4	A039GW46D	WG	N	19-Sep-06	E415.1	TOC	Total Organic Carbon	2.93	J	0.33	1	mg/L
039GW46DR5	A039GW46D	WG	N	30-Oct-06	SW8260B	DCE11	1,1-Dichloroethene	1.7	J	0.3	5	ug/L
039GW46DR5	A039GW46D	WG	N	30-Oct-06	SW8260B	DCE12TOT	1,2-Dichloroethene (total)	114	=	0.3	5	ug/L
039GW46DR5DL	A039GW46D	WG	LR	30-Oct-06	SW8260B	DCE12C	cis-1,2-Dichloroethylene	111	=	0.6	10	ug/L
039GW46DR5	A039GW46D	WG	N	30-Oct-06	SW8260B	PCE	Tetrachloroethylene (PCE)	3.7	J	0.25	5	ug/L
039GW46DR5	A039GW46D	WG	N	30-Oct-06	E415.1	TOC	Total Organic Carbon	1.97	J	0.33	1	mg/L
039GW46DR5	A039GW46D	WG	N	30-Oct-06	SW8260B	DCE12T	trans-1,2-Dichloroethene	1.4	J	0.3	5	ug/L
039GW46DR5	A039GW46D	WG	N	30-Oct-06	SW8260B	TCE	Trichloroethylene (TCE)	12.6	=	0.25	5	ug/L
039GW46DR5	A039GW46D	WG	N	30-Oct-06	SW8260B	VC	Vinyl chloride	7.6	J	0.5	10	ug/L
039GW46DR7	A039GW46D	WG	N	05-Dec-06	E415.1	TOC	Total Organic Carbon	2.79	J	0.33	1	mg/L
039GW48DP2DL	A039GW48D	WG	LR	14-Jan-05	SW8260B	DCE12C	cis-1,2-Dichloroethylene	177	=	0.6	10	ug/L
039GW48DP2	A039GW48D	WG	N	17-Jan-05	SW8260B	DCE11	1,1-Dichloroethene	3.4	J	0.41	5	ug/L
039GW48DP2	A039GW48D	WG	N	17-Jan-05	E310.1	ALK	Alkalinity, Total (as CaCO3)	75.7	=	1.45	2	mg/L
039GW48DP2	A039GW48D	WG	N	17-Jan-05	E300	BR	Bromide	0.108	J	0.0978	0.2	mg/L
039GW48DP2	A039GW48D	WG	N	17-Jan-05	SW6010B	DISSFE	Iron, Dissolved	1460	=	5.66	100	ug/L
039GW48DP2	A039GW48D	WG	N	17-Jan-05	SW6010B	DISSMN	Manganese, Dissolved	891	=	0.087	15	ug/L
039GW48DP2	A039GW48D	WG	N	17-Jan-05	E300	SO4	Sulfate (as SO4)	47.3	=	0.386	0.8	mg/L
039GW48DP2	A039GW48D	WG	N	17-Jan-05	E376.2	S	Sulfide	0.0248	UJ	0.0248	0.1	mg/L
039GW48DP2	A039GW48D	WG	N	17-Jan-05	SW8260B	PCE	Tetrachloroethylene (PCE)	2.7	J	0.33	5	ug/L
039GW48DP2	A039GW48D	WG	N	17-Jan-05	E415.1	TOC	Total Organic Carbon	2.11	U	0.025	0.2	mg/L
039GW48DP2	A039GW48D	WG	N	17-Jan-05	SW8260B	DCE12T	trans-1,2-Dichloroethene	1.4	J	0.37	5	ug/L
039GW48DP2	A039GW48D	WG	N	17-Jan-05	SW8260B	TCE	Trichloroethylene (TCE)	41.7	=	0.36	5	ug/L
039GW48DP2	A039GW48D	WG	N	17-Jan-05	SW8260B	VC	Vinyl chloride	8	J	0.55	10	ug/L
039GW48DQ2	A039GW48D	WG	N	14-Jun-05	E415.1	TOC	Total Organic Carbon	1.83	U	0.074	0.2	mg/L
039GW48DQ1	A039GW48D	WG	N	29-Jun-05	E415.1	TOC	Total Organic Carbon	2.17	U	0.074	0.2	mg/L
039GW48DQ7	A039GW48D	WG	N	30-Nov-05	SW8260B	DCE11	1,1-Dichloroethene	5.1	=	1.2	4	ug/L
039GW48DQ7	A039GW48D	WG	N	30-Nov-05	E310.1	ALK	Alkalinity, Total (as CaCO3)	150	=	1.45	2	mg/L
039GW48DQ7	A039GW48D	WG	N	30-Nov-05	E300	BR	Bromide	6.12	=	0.082	0.4	mg/L
039GW48DQ7	A039GW48D	WG	N	30-Nov-05	SW8260B	DCE12C	cis-1,2-Dichloroethylene	231	=	1.2	4	ug/L
039GW48DQ7	A039GW48D	WG	N	30-Nov-05	SW8260B	PCE	Tetrachloroethylene (PCE)	5.8	=	1	4	ug/L
039GW48DQ7	A039GW48D	WG	N	30-Nov-05	E415.1	TOC	Total Organic Carbon	32.6	=	0.74	10	mg/L
039GW48DQ7	A039GW48D	WG	N	30-Nov-05	SW8260B	DCE12T	trans-1,2-Dichloroethene	4	U	1.2	4	ug/L
039GW48DQ7	A039GW48D	WG	N	30-Nov-05	SW8260B	TCE	Trichloroethylene (TCE)	23.6	=	1	4	ug/L
039GW48DQ7	A039GW48D	WG	N	30-Nov-05	SW8260B	VC	Vinyl chloride	6.5	=	2	4	ug/L
039GW48DR2	A039GW48D	WG	N	13-Jul-06	SW8260B	TCA111	1,1,1-Trichloroethane	1	U	0.3	1	ug/L

SampleID	StationID	Matrix	SampleType	DateCollected	Method	ParamID	Paramname	AnaValue	ProjQual	MDL	RL	Units
039GW48DR2	A039GW48D	WG	N	13-Jul-06	SW8260B	PCA	1,1,2,2-Tetrachloroethane	1	U	0.25	1	ug/L
039GW48DR2	A039GW48D	WG	N	13-Jul-06	SW8260B	TCA112	1,1,2-Trichloroethane	1	U	0.25	1	ug/L
039GW48DR2	A039GW48D	WG	N	13-Jul-06	SW8260B	DCA11	1,1-Dichloroethane	0.44	J	0.3	1	ug/L
039GW48DR2	A039GW48D	WG	N	13-Jul-06	SW8260B	DCE11	1,1-Dichloroethene	2.4	=	0.3	1	ug/L
039GW48DR2	A039GW48D	WG	N	13-Jul-06	SW8260B	TCB123	1,2,3-Trichlorobenzene	1	U	0.3	1	ug/L
039GW48DR2	A039GW48D	WG	N	13-Jul-06	SW8260B	TCB124	1,2,4-Trichlorobenzene	1	U	0.3	1	ug/L
039GW48DR2	A039GW48D	WG	N	13-Jul-06	SW8260B	DCBZ12	1,2-Dichlorobenzene	1	U	0.25	1	ug/L
039GW48DR2	A039GW48D	WG	N	13-Jul-06	SW8260B	DCA12	1,2-Dichloroethane	1	U	0.25	1	ug/L
039GW48DR2DL	A039GW48D	WG	LR	13-Jul-06	SW8260B	DCE12TOT	1,2-Dichloroethene (total)	234	=	1.5	5	ug/L
039GW48DR2	A039GW48D	WG	N	13-Jul-06	SW8260B	DCPA12	1,2-Dichloropropane	1	U	0.25	1	ug/L
039GW48DR2	A039GW48D	WG	N	13-Jul-06	SW8260B	DCBZ13	1,3-Dichlorobenzene	1	U	0.25	1	ug/L
039GW48DR2	A039GW48D	WG	N	13-Jul-06	SW8260B	DCBZ14	1,4-Dichlorobenzene	1	U	0.25	1	ug/L
039GW48DR2	A039GW48D	WG	N	13-Jul-06	SW8260B	CEVETH	2-Chloroethyl vinyl ether	5	UJ	1.5	5	ug/L
039GW48DR2	A039GW48D	WG	N	13-Jul-06	SW8260B	HXO2	2-Hexanone	10	U	1.25	10	ug/L
039GW48DR2	A039GW48D	WG	N	13-Jul-06	SW8260B	ACE	Acetone	10	U	1.25	10	ug/L
039GW48DR2	A039GW48D	WG	N	13-Jul-06	SW8260B	BZ	Benzene	1	U	0.3	1	ug/L
039GW48DR2	A039GW48D	WG	N	13-Jul-06	SW8260B	BDCME	Bromodichloromethane	1	U	0.25	1	ug/L
039GW48DR2	A039GW48D	WG	N	13-Jul-06	SW8260B	TBME	Bromoform	1	U	0.25	1	ug/L
039GW48DR2	A039GW48D	WG	N	13-Jul-06	SW8260B	BRME	Bromomethane	1	U	0.5	1	ug/L
039GW48DR2	A039GW48D	WG	N	13-Jul-06	SW8260B	CDS	Carbon Disulfide	1.6	J	1.25	5	ug/L
039GW48DR2	A039GW48D	WG	N	13-Jul-06	SW8260B	CTCL	Carbon Tetrachloride	1	U	0.25	1	ug/L
039GW48DR2	A039GW48D	WG	N	13-Jul-06	SW8260B	CLBZ	Chlorobenzene	1	U	0.25	1	ug/L
039GW48DR2	A039GW48D	WG	N	13-Jul-06	SW8260B	CLEA	Chloroethane	1.2	=	0.5	1	ug/L
039GW48DR2	A039GW48D	WG	N	13-Jul-06	SW8260B	TCLME	Chloroform	1	U	0.25	1	ug/L
039GW48DR2	A039GW48D	WG	N	13-Jul-06	SW8260B	CLME	Chloromethane	1	U	0.5	1	ug/L
039GW48DR2DL	A039GW48D	WG	LR	13-Jul-06	SW8260B	DCE12C	cis-1,2-Dichloroethylene	232	=	1.5	5	ug/L
039GW48DR2	A039GW48D	WG	N	13-Jul-06	SW8260B	DCP13C	cis-1,3-Dichloropropene	1	U	0.25	1	ug/L
039GW48DR2	A039GW48D	WG	N	13-Jul-06	SW8260B	DBCME	Dibromochloromethane	1	U	0.25	1	ug/L
039GW48DR2	A039GW48D	WG	N	13-Jul-06	SW8260B	EBZ	Ethylbenzene	1	U	0.25	1	ug/L
039GW48DR2	A039GW48D	WG	N	13-Jul-06	SW8260B	XYLMP	m+p Xylene	2	U	0.25	2	ug/L
039GW48DR2	A039GW48D	WG	N	13-Jul-06	SW8260B	MEK	Methyl ethyl ketone (2-Butanone)	46.4	=	1.25	10	ug/L
039GW48DR2	A039GW48D	WG	N	13-Jul-06	SW8260B	MIBK	Methyl isobutyl ketone (4-Methyl-2-pentanone)	10	U	1.25	10	ug/L
039GW48DR2	A039GW48D	WG	N	13-Jul-06	SW8260B	MTLNCL	Methylene Chloride	5	U	2	5	ug/L
039GW48DR2	A039GW48D	WG	N	13-Jul-06	SW8260B	XYLO	o-Xylene	1	U	0.25	1	ug/L
039GW48DR2	A039GW48D	WG	N	13-Jul-06	SW8260B	STY	Styrene	1	U	0.25	1	ug/L

ALL ANALYTICAL DATA - SWMU 39 CMIP

SampleID	StationID	Matrix	SampleType	DateCollected	Method	ParamID	Paramname	AnaValue	ProjQual	MDL	RL	Units
039GW48DR2	A039GW48D	WG	N	13-Jul-06	SW8260B	PCE	Tetrachloroethylene (PCE)	1.7	=	0.25	1	ug/L
039GW48DR2	A039GW48D	WG	N	13-Jul-06	SW8260B	BZME	Toluene	1	U	0.25	1	ug/L
039GW48DR2	A039GW48D	WG	N	13-Jul-06	SW8260B	DCE12T	trans-1,2-Dichloroethene	1.5	=	0.3	1	ug/L
039GW48DR2	A039GW48D	WG	N	13-Jul-06	SW8260B	DCP13T	trans-1,3-Dichloropropene	1	U	0.25	1	ug/L
039GW48DR2	A039GW48D	WG	N	13-Jul-06	SW8260B	TCE	Trichloroethylene (TCE)	4.4	=	0.25	1	ug/L
039GW48DR2	A039GW48D	WG	N	13-Jul-06	SW8260B	VA	Vinyl acetate	5	U	1.5	5	ug/L
039GW48DR2	A039GW48D	WG	N	13-Jul-06	SW8260B	VC	Vinyl chloride	5.7	=	0.5	1	ug/L
039GW48DR2	A039GW48D	WG	N	13-Jul-06	SW8260B	XYLENES	Xylenes, Total	3	U	0.25	3	ug/L
039GW48DR3	A039GW48D	WG	N	17-Aug-06	E415.1	TOC	Total Organic Carbon	485	J	33	100	mg/L
039GW48DR4	A039GW48D	WG	N	19-Sep-06	E415.1	TOC	Total Organic Carbon	492	=	33	100	mg/L
039GW48DR5	A039GW48D	WG	N	30-Oct-06	SW8260B	DCE11	1,1-Dichloroethene	2.2	J	0.3	5	ug/L
039GW48DR5	A039GW48D	WG	N	30-Oct-06	SW8260B	DCE12TOT	1,2-Dichloroethene (total)	181	=	0.3	5	ug/L
039GW48DR5DL	A039GW48D	WG	LR	30-Oct-06	SW8260B	DCE12C	cis-1,2-Dichloroethylene	178	=	0.6	10	ug/L
039GW48DR5	A039GW48D	WG	N	30-Oct-06	SW8260B	PCE	Tetrachloroethylene (PCE)	2.6	J	0.25	5	ug/L
039GW48DR5	A039GW48D	WG	N	30-Oct-06	E415.1	TOC	Total Organic Carbon	843	=	33	100	mg/L
039GW48DR5	A039GW48D	WG	N	30-Oct-06	SW8260B	DCE12T	trans-1,2-Dichloroethene	1.5	J	0.3	5	ug/L
039GW48DR5	A039GW48D	WG	N	30-Oct-06	SW8260B	TCE	Trichloroethylene (TCE)	5.6	=	0.25	5	ug/L
039GW48DR5	A039GW48D	WG	N	30-Oct-06	SW8260B	VC	Vinyl chloride	5.4	J	0.5	10	ug/L
039GW48DR7	A039GW48D	WG	N	05-Dec-06	E415.1	TOC	Total Organic Carbon	704	=	165	500	mg/L

BIOBARRIER D. T RESULTS

SampleID	StationID	Matrix	SampleType	DateCollected	Method	ParamID	Paramname	AnaValue	ProjQual	MDL	RL	Units
039GP13512	A039GP135	WG	N	09-Aug-05	SW8260B	ACE	Acetone	3.5	J	1.25	5	ug/L
039GP13512	A039GP135	WG	N	09-Aug-05	SW8260B	BDCME	Bromodichloromethane	1	U	0.25	1	ug/L
039GP13512	A039GP135	WG	N	09-Aug-05	SW8260B	BRME	Bromomethane	1	U	0.5	1	ug/L
039GP13512	A039GP135	WG	N	09-Aug-05	SW8260B	BZ	Benzene	1	U	0.3	1	ug/L
039GP13512	A039GP135	WG	N	09-Aug-05	SW8260B	BZME	Toluene	1	U	0.25	1	ug/L
039GP13512	A039GP135	WG	N	09-Aug-05	SW8260B	CDS	Carbon Disulfide	5.5	=	1.25	5	ug/L
039GP13512	A039GP135	WG	N	09-Aug-05	SW8260B	CEVETH	2-Chloroethyl vinyl ether	5	U	1.5	5	ug/L
039GP13512	A039GP135	WG	N	09-Aug-05	SW8260B	CLBZ	Chlorobenzene	1	U	0.25	1	ug/L
039GP13512	A039GP135	WG	N	09-Aug-05	SW8260B	CLEA	Chloroethane	1	U	0.5	1	ug/L
039GP13512	A039GP135	WG	N	09-Aug-05	SW8260B	CLME	Chloromethane	1	U	0.5	1	ug/L
039GP13512	A039GP135	WG	N	09-Aug-05	SW8260B	CTCL	Carbon Tetrachloride	1	U	0.25	1	ug/L
039GP13512	A039GP135	WG	N	09-Aug-05	SW8260B	DBCME	Dibromochloromethane	1	U	0.25	1	ug/L
039GP13512	A039GP135	WG	N	09-Aug-05	SW8260B	DCA11	1,1-Dichloroethane	1	U	0.3	1	ug/L
039GP13512	A039GP135	WG	N	09-Aug-05	SW8260B	DCA12	1,2-Dichloroethane	1	U	0.25	1	ug/L
039GP13512	A039GP135	WG	N	09-Aug-05	SW8260B	DCBZ12	1,2-Dichlorobenzene	1	U	0.25	1	ug/L
039GP13512	A039GP135	WG	N	09-Aug-05	SW8260B	DCBZ13	1,3-Dichlorobenzene	1	U	0.25	1	ug/L
039GP13512	A039GP135	WG	N	09-Aug-05	SW8260B	DCBZ14	1,4-Dichlorobenzene	1	U	0.25	1	ug/L
039GP13512	A039GP135	WG	N	09-Aug-05	SW8260B	DCE11	1,1-Dichloroethene	1	U	0.3	1	ug/L
039GP13512	A039GP135	WG	N	09-Aug-05	SW8260B	DCE12C	cis-1,2-Dichloroethylene	1	U	0.3	1	ug/L
039GP13512	A039GP135	WG	N	09-Aug-05	SW8260B	DCE12T	trans-1,2-Dichloroethene	1	U	0.3	1	ug/L
039GP13512	A039GP135	WG	N	09-Aug-05	SW8260B	DCE12TOT	1,2-Dichloroethene (total)	1	U	0.3	1	ug/L
039GP13512	A039GP135	WG	N	09-Aug-05	SW8260B	DCP13C	cis-1,3-Dichloropropene	1	U	0.25	1	ug/L
039GP13512	A039GP135	WG	N	09-Aug-05	SW8260B	DCP13T	trans-1,3-Dichloropropene	1	U	0.25	1	ug/L
039GP13512	A039GP135	WG	N	09-Aug-05	SW8260B	DCPA12	1,2-Dichloropropane	1	U	0.25	1	ug/L
039GP13512	A039GP135	WG	N	09-Aug-05	SW8260B	EBZ	Ethylbenzene	1	U	0.25	1	ug/L
039GP13512	A039GP135	WG	N	09-Aug-05	SW8260B	HXO2	2-Hexanone	5	U	1.25	5	ug/L
039GP13512	A039GP135	WG	N	09-Aug-05	SW8260B	MEK	Methyl ethyl ketone (2-Butanone)	5	U	1.25	5	ug/L
039GP13512	A039GP135	WG	N	09-Aug-05	SW8260B	MIBK	Methyl isobutyl ketone (4-Methyl-2-pentanone)	5	U	1.25	5	ug/L
039GP13512	A039GP135	WG	N	09-Aug-05	SW8260B	MTLNCL	Methylene Chloride	5	U	2	5	ug/L
039GP13512	A039GP135	WG	N	09-Aug-05	SW8260B	PCA	1,1,2,2-Tetrachloroethane	1	U	0.25	1	ug/L
039GP13512	A039GP135	WG	N	09-Aug-05	SW8260B	PCE	Tetrachloroethylene (PCE)	1	U	0.25	1	ug/L
039GP13512	A039GP135	WG	N	09-Aug-05	SW8260B	STY	Styrene	1	U	0.25	1	ug/L
039GP13512	A039GP135	WG	N	09-Aug-05	SW8260B	TBME	Bromoform	1	U	0.25	1	ug/L
039GP13512	A039GP135	WG	N	09-Aug-05	SW8260B	TCA111	1,1,1-Trichloroethane	1	U	0.3	1	ug/L
039GP13512	A039GP135	WG	N	09-Aug-05	SW8260B	TCA112	1,1,2-Trichloroethane	1	U	0.25	1	ug/L

BIOBARRIER DPT RESULTS

SampleID	StationID	Matrix	SampleType	DateCollected	Method	ParamID	Paramname	AnaValue	ProjQual	MDL	RL	Units
039GP13512	A039GP135	WG	N	09-Aug-05	SW8260B	TCB123	1,2,3-Trichlorobenzene	1	UJ	0.3	1	ug/L
039GP13512	A039GP135	WG	N	09-Aug-05	SW8260B	TCB124	1,2,4-Trichlorobenzene	1	UJ	0.3	1	ug/L
039GP13512	A039GP135	WG	N	09-Aug-05	SW8260B	TCE	Trichloroethylene (TCE)	1	U	0.25	1	ug/L
039GP13512	A039GP135	WG	N	09-Aug-05	SW8260B	TCLME	Chloroform	1	U	0.25	1	ug/L
039GP13512	A039GP135	WG	N	09-Aug-05	SW8260B	VA	Vinyl acetate	5	U	1.5	5	ug/L
039GP13512	A039GP135	WG	N	09-Aug-05	SW8260B	VC	Vinyl chloride	1	U	0.5	1	ug/L
039GP13512	A039GP135	WG	N	09-Aug-05	SW8260B	XYLENES	Xylenes, Total	1	U	0.25	1	ug/L
039GP13512	A039GP135	WG	N	09-Aug-05	SW8260B	XYLMP	m+p Xylene	2	U	0.25	2	ug/L
039GP13512	A039GP135	WG	N	09-Aug-05	SW8260B	XYLO	o-Xylene	1	U	0.25	1	ug/L
039GP13528	A039GP135	WG	N	09-Aug-05	SW8260B	ACE	Acetone	2.7	J	1.25	5	ug/L
039GP13528	A039GP135	WG	N	09-Aug-05	SW8260B	BDCME	Bromodichloromethane	1	U	0.25	1	ug/L
039GP13528	A039GP135	WG	N	09-Aug-05	SW8260B	BRME	Bromomethane	1	U	0.5	1	ug/L
039GP13528	A039GP135	WG	N	09-Aug-05	SW8260B	BZ	Benzene	1	U	0.3	1	ug/L
039GP13528	A039GP135	WG	N	09-Aug-05	SW8260B	BZME	Toluene	1	U	0.25	1	ug/L
039GP13528	A039GP135	WG	N	09-Aug-05	SW8260B	CDS	Carbon Disulfide	5	U	1.25	5	ug/L
039GP13528	A039GP135	WG	N	09-Aug-05	SW8260B	CEVETH	2-Chloroethyl vinyl ether	5	U	1.5	5	ug/L
039GP13528	A039GP135	WG	N	09-Aug-05	SW8260B	CLBZ	Chlorobenzene	1	U	0.25	1	ug/L
039GP13528	A039GP135	WG	N	09-Aug-05	SW8260B	CLEA	Chloroethane	1	U	0.5	1	ug/L
039GP13528	A039GP135	WG	N	09-Aug-05	SW8260B	CLME	Chloromethane	1	U	0.5	1	ug/L
039GP13528	A039GP135	WG	N	09-Aug-05	SW8260B	CTCL	Carbon Tetrachloride	1	U	0.25	1	ug/L
039GP13528	A039GP135	WG	N	09-Aug-05	SW8260B	DBCME	Dibromochloromethane	1	U	0.25	1	ug/L
039GP13528	A039GP135	WG	N	09-Aug-05	SW8260B	DCA11	1,1-Dichloroethane	0.53	J	0.3	1	ug/L
039GP13528	A039GP135	WG	N	09-Aug-05	SW8260B	DCA12	1,2-Dichloroethane	1	U	0.25	1	ug/L
039GP13528	A039GP135	WG	N	09-Aug-05	SW8260B	DCBZ12	1,2-Dichlorobenzene	1	U	0.25	1	ug/L
039GP13528	A039GP135	WG	N	09-Aug-05	SW8260B	DCBZ13	1,3-Dichlorobenzene	1	U	0.25	1	ug/L
039GP13528	A039GP135	WG	N	09-Aug-05	SW8260B	DCBZ14	1,4-Dichlorobenzene	1	U	0.25	1	ug/L
039GP13528	A039GP135	WG	N	09-Aug-05	SW8260B	DCE11	1,1-Dichloroethene	1	U	0.3	1	ug/L
039GP13528	A039GP135	WG	N	09-Aug-05	SW8260B	DCE12C	cis-1,2-Dichloroethylene	15.3	=	0.3	1	ug/L
039GP13528	A039GP135	WG	N	09-Aug-05	SW8260B	DCE12T	trans-1,2-Dichloroethene	1	U	0.3	1	ug/L
039GP13528	A039GP135	WG	N	09-Aug-05	SW8260B	DCE12TOT	1,2-Dichloroethene (total)	15.3	=	0.3	1	ug/L
039GP13528	A039GP135	WG	N	09-Aug-05	SW8260B	DCP13C	cis-1,3-Dichloropropene	1	U	0.25	1	ug/L
039GP13528	A039GP135	WG	N	09-Aug-05	SW8260B	DCP13T	trans-1,3-Dichloropropene	1	U	0.25	1	ug/L
039GP13528	A039GP135	WG	N	09-Aug-05	SW8260B	DCPA12	1,2-Dichloropropane	1	U	0.25	1	ug/L
039GP13528	A039GP135	WG	N	09-Aug-05	SW8260B	EBZ	Ethylbenzene	1	U	0.25	1	ug/L
039GP13528	A039GP135	WG	N	09-Aug-05	SW8260B	HXO2	2-Hexanone	5	U	1.25	5	ug/L
039GP13528	A039GP135	WG	N	09-Aug-05	SW8260B	MEK	Methyl ethyl ketone (2-Butanone)	5	U	1.25	5	ug/L

SampleID	StationID	Matrix	SampleType	DateCollected	Method	ParamID	Paramname	AnaValue	ProjQual	MDL	RL	Units
039GP13528	A039GP135	WG	N	09-Aug-05	SW8260B	MIBK	Methyl isobutyl ketone (4-Methyl-2-pentanone)	5	U	1.25	5	ug/L
039GP13528	A039GP135	WG	N	09-Aug-05	SW8260B	MTLNCL	Methylene Chloride	5	U	2	5	ug/L
039GP13528	A039GP135	WG	N	09-Aug-05	SW8260B	PCA	1,1,2,2-Tetrachloroethane	1	U	0.25	1	ug/L
039GP13528	A039GP135	WG	N	09-Aug-05	SW8260B	PCE	Tetrachloroethylene (PCE)	1	U	0.25	1	ug/L
039GP13528	A039GP135	WG	N	09-Aug-05	SW8260B	STY	Styrene	1	U	0.25	1	ug/L
039GP13528	A039GP135	WG	N	09-Aug-05	SW8260B	TBME	Bromoform	1	U	0.25	1	ug/L
039GP13528	A039GP135	WG	N	09-Aug-05	SW8260B	TCA111	1,1,1-Trichloroethane	1	U	0.3	1	ug/L
039GP13528	A039GP135	WG	N	09-Aug-05	SW8260B	TCA112	1,1,2-Trichloroethane	1	U	0.25	1	ug/L
039GP13528	A039GP135	WG	N	09-Aug-05	SW8260B	TCB123	1,2,3-Trichlorobenzene	1	UJ	0.3	1	ug/L
039GP13528	A039GP135	WG	N	09-Aug-05	SW8260B	TCB124	1,2,4-Trichlorobenzene	1	UJ	0.3	1	ug/L
039GP13528	A039GP135	WG	N	09-Aug-05	SW8260B	TCE	Trichloroethylene (TCE)	4.3	=	0.25	1	ug/L
039GP13528	A039GP135	WG	N	09-Aug-05	SW8260B	TCLME	Chloroform	1	U	0.25	1	ug/L
039GP13528	A039GP135	WG	N	09-Aug-05	SW8260B	VA	Vinyl acetate	5	U	1.5	5	ug/L
039GP13528	A039GP135	WG	N	09-Aug-05	SW8260B	VC	Vinyl chloride	2.7	=	0.5	1	ug/L
039GP13528	A039GP135	WG	N	09-Aug-05	SW8260B	XYLENES	Xylenes, Total	1	U	0.25	1	ug/L
039GP13528	A039GP135	WG	N	09-Aug-05	SW8260B	XYLMP	m+p Xylene	2	U	0.25	2	ug/L
039GP13528	A039GP135	WG	N	09-Aug-05	SW8260B	XYLO	o-Xylene	1	U	0.25	1	ug/L
039GP13538	A039GP135	WG	N	09-Aug-05	SW8260B	ACE	Acetone	5.9	=	1.25	5	ug/L
039GP13538	A039GP135	WG	N	09-Aug-05	SW8260B	BDCME	Bromodichloromethane	1	U	0.25	1	ug/L
039GP13538	A039GP135	WG	N	09-Aug-05	SW8260B	BRME	Bromomethane	1	U	0.5	1	ug/L
039GP13538	A039GP135	WG	N	09-Aug-05	SW8260B	BZ	Benzene	1	U	0.3	1	ug/L
039GP13538	A039GP135	WG	N	09-Aug-05	SW8260B	BZME	Toluene	1	U	0.25	1	ug/L
039GP13538	A039GP135	WG	N	09-Aug-05	SW8260B	CDS	Carbon Disulfide	5	U	1.25	5	ug/L
039GP13538	A039GP135	WG	N	09-Aug-05	SW8260B	CEVETH	2-Chloroethyl vinyl ether	5	U	1.5	5	ug/L
039GP13538	A039GP135	WG	N	09-Aug-05	SW8260B	CLBZ	Chlorobenzene	1	U	0.25	1	ug/L
039GP13538	A039GP135	WG	N	09-Aug-05	SW8260B	CLEA	Chloroethane	1	U	0.5	1	ug/L
039GP13538	A039GP135	WG	N	09-Aug-05	SW8260B	CLME	Chloromethane	1	U	0.5	1	ug/L
039GP13538	A039GP135	WG	N	09-Aug-05	SW8260B	CTCL	Carbon Tetrachloride	1	U	0.25	1	ug/L
039GP13538	A039GP135	WG	N	09-Aug-05	SW8260B	DBCME	Dibromochloromethane	1	U	0.25	1	ug/L
039GP13538	A039GP135	WG	N	09-Aug-05	SW8260B	DCA11	1,1-Dichloroethane	1	U	0.3	1	ug/L
039GP13538	A039GP135	WG	N	09-Aug-05	SW8260B	DCA12	1,2-Dichloroethane	1	U	0.25	1	ug/L
039GP13538	A039GP135	WG	N	09-Aug-05	SW8260B	DCBZ12	1,2-Dichlorobenzene	1	U	0.25	1	ug/L
039GP13538	A039GP135	WG	N	09-Aug-05	SW8260B	DCBZ13	1,3-Dichlorobenzene	1	U	0.25	1	ug/L
039GP13538	A039GP135	WG	N	09-Aug-05	SW8260B	DCBZ14	1,4-Dichlorobenzene	1	U	0.25	1	ug/L
039GP13538	A039GP135	WG	N	09-Aug-05	SW8260B	DCE11	1,1-Dichloroethene	1	U	0.3	1	ug/L
039GP13538	A039GP135	WG	N	09-Aug-05	SW8260B	DCE12C	cis-1,2-Dichloroethylene	1	U	0.3	1	ug/L

BIOBARRIER DPT RESULTS

SampleID	StationID	Matrix	SampleType	DateCollected	Method	ParamID	Paramname	AnaValue	ProjQual	MDL	RL	Units
039GP13538	A039GP135	WG	N	09-Aug-05	SW8260B	DCE12T	trans-1,2-Dichloroethene	1	U	0.3	1	ug/L
039GP13538	A039GP135	WG	N	09-Aug-05	SW8260B	DCE12TOT	1,2-Dichloroethene (total)	1	U	0.3	1	ug/L
039GP13538	A039GP135	WG	N	09-Aug-05	SW8260B	DCP13C	cis-1,3-Dichloropropene	1	U	0.25	1	ug/L
039GP13538	A039GP135	WG	N	09-Aug-05	SW8260B	DCP13T	trans-1,3-Dichloropropene	1	U	0.25	1	ug/L
039GP13538	A039GP135	WG	N	09-Aug-05	SW8260B	DCPA12	1,2-Dichloropropane	1	U	0.25	1	ug/L
039GP13538	A039GP135	WG	N	09-Aug-05	SW8260B	EBZ	Ethylbenzene	1	U	0.25	1	ug/L
039GP13538	A039GP135	WG	N	09-Aug-05	SW8260B	HXO2	2-Hexanone	5	U	1.25	5	ug/L
039GP13538	A039GP135	WG	N	09-Aug-05	SW8260B	MEK	Methyl ethyl ketone (2-Butanone)	1.4	J	1.25	5	ug/L
039GP13538	A039GP135	WG	N	09-Aug-05	SW8260B	MIBK	Methyl isobutyl ketone (4-Methyl-2-pentanone)	5	U	1.25	5	ug/L
039GP13538	A039GP135	WG	N	09-Aug-05	SW8260B	MTLNCL	Methylene Chloride	5	U	2	5	ug/L
039GP13538	A039GP135	WG	N	09-Aug-05	SW8260B	PCA	1,1,2,2-Tetrachloroethane	1	U	0.25	1	ug/L
039GP13538	A039GP135	WG	N	09-Aug-05	SW8260B	PCE	Tetrachloroethylene (PCE)	1	U	0.25	1	ug/L
039GP13538	A039GP135	WG	N	09-Aug-05	SW8260B	STY	Styrene	1	U	0.25	1	ug/L
039GP13538	A039GP135	WG	N	09-Aug-05	SW8260B	TBME	Bromoform	1	U	0.25	1	ug/L
039GP13538	A039GP135	WG	N	09-Aug-05	SW8260B	TCA111	1,1,1-Trichloroethane	1	U	0.3	1	ug/L
039GP13538	A039GP135	WG	N	09-Aug-05	SW8260B	TCA112	1,1,2-Trichloroethane	1	U	0.25	1	ug/L
039GP13538	A039GP135	WG	N	09-Aug-05	SW8260B	TCB123	1,2,3-Trichlorobenzene	1	UJ	0.3	1	ug/L
039GP13538	A039GP135	WG	N	09-Aug-05	SW8260B	TCB124	1,2,4-Trichlorobenzene	1	UJ	0.3	1	ug/L
039GP13538	A039GP135	WG	N	09-Aug-05	SW8260B	TCE	Trichloroethylene (TCE)	1	U	0.25	1	ug/L
039GP13538	A039GP135	WG	N	09-Aug-05	SW8260B	TCLME	Chloroform	1	U	0.25	1	ug/L
039GP13538	A039GP135	WG	N	09-Aug-05	SW8260B	VA	Vinyl acetate	5	U	1.5	5	ug/L
039GP13538	A039GP135	WG	N	09-Aug-05	SW8260B	VC	Vinyl chloride	1	U	0.5	1	ug/L
039GP13538	A039GP135	WG	N	09-Aug-05	SW8260B	XYLENES	Xylenes, Total	1	U	0.25	1	ug/L
039GP13538	A039GP135	WG	N	09-Aug-05	SW8260B	XYLMP	m+p Xylene	2	U	0.25	2	ug/L
039GP13538	A039GP135	WG	N	09-Aug-05	SW8260B	XYLO	o-Xylene	1	U	0.25	1	ug/L

SampleID	StationID	Matrix	SampleType	DateCollected	Method	ParamID	Paramname	AnaValue	ProjQual	MDL	RL	Units
039GP13612	A039GP136	WG	N	09-Aug-05	SW8260B	ACE	Acetone	20.6	=	1.25	5	ug/L
039GP13612	A039GP136	WG	N	09-Aug-05	SW8260B	BDCME	Bromodichloromethane	1	U	0.25	1	ug/L
039GP13612	A039GP136	WG	N	09-Aug-05	SW8260B	BRME	Bromomethane	1	U	0.5	1	ug/L
039GP13612	A039GP136	WG	N	09-Aug-05	SW8260B	BZ	Benzene	1	U	0.3	1	ug/L
039GP13612	A039GP136	WG	N	09-Aug-05	SW8260B	BZME	Toluene	1	U	0.25	1	ug/L
039GP13612	A039GP136	WG	N	09-Aug-05	SW8260B	CDS	Carbon Disulfide	5	U	1.25	5	ug/L
039GP13612	A039GP136	WG	N	09-Aug-05	SW8260B	CEVETH	2-Chloroethyl vinyl ether	5	U	1.5	5	ug/L
039GP13612	A039GP136	WG	N	09-Aug-05	SW8260B	CLBZ	Chlorobenzene	1	U	0.25	1	ug/L
039GP13612	A039GP136	WG	N	09-Aug-05	SW8260B	CLEA	Chloroethane	1	U	0.5	1	ug/L
039GP13612	A039GP136	WG	N	09-Aug-05	SW8260B	CLME	Chloromethane	1	U	0.5	1	ug/L
039GP13612	A039GP136	WG	N	09-Aug-05	SW8260B	CTCL	Carbon Tetrachloride	1	U	0.25	1	ug/L
039GP13612	A039GP136	WG	N	09-Aug-05	SW8260B	DBCME	Dibromochloromethane	1	U	0.25	1	ug/L
039GP13612	A039GP136	WG	N	09-Aug-05	SW8260B	DCA11	1,1-Dichloroethane	1	U	0.3	1	ug/L
039GP13612	A039GP136	WG	N	09-Aug-05	SW8260B	DCA12	1,2-Dichloroethane	1	U	0.25	1	ug/L
039GP13612	A039GP136	WG	N	09-Aug-05	SW8260B	DCBZ12	1,2-Dichlorobenzene	1	U	0.25	1	ug/L
039GP13612	A039GP136	WG	N	09-Aug-05	SW8260B	DCBZ13	1,3-Dichlorobenzene	1	U	0.25	1	ug/L
039GP13612	A039GP136	WG	N	09-Aug-05	SW8260B	DCBZ14	1,4-Dichlorobenzene	1	U	0.25	1	ug/L
039GP13612	A039GP136	WG	N	09-Aug-05	SW8260B	DCE11	1,1-Dichloroethene	1	U	0.3	1	ug/L
039GP13612	A039GP136	WG	N	09-Aug-05	SW8260B	DCE12C	cis-1,2-Dichloroethylene	0.82	J	0.3	1	ug/L
039GP13612	A039GP136	WG	N	09-Aug-05	SW8260B	DCE12T	trans-1,2-Dichloroethene	1	U	0.3	1	ug/L
039GP13612	A039GP136	WG	N	09-Aug-05	SW8260B	DCE12TOT	1,2-Dichloroethene (total)	0.82	J	0.3	1	ug/L
039GP13612	A039GP136	WG	N	09-Aug-05	SW8260B	DCP13C	cis-1,3-Dichloropropene	1	U	0.25	1	ug/L
039GP13612	A039GP136	WG	N	09-Aug-05	SW8260B	DCP13T	trans-1,3-Dichloropropene	1	U	0.25	1	ug/L
039GP13612	A039GP136	WG	N	09-Aug-05	SW8260B	DCPA12	1,2-Dichloropropane	1	U	0.25	1	ug/L
039GP13612	A039GP136	WG	N	09-Aug-05	SW8260B	EBZ	Ethylbenzene	1	U	0.25	1	ug/L
039GP13612	A039GP136	WG	N	09-Aug-05	SW8260B	HXO2	2-Hexanone	5	U	1.25	5	ug/L
039GP13612	A039GP136	WG	N	09-Aug-05	SW8260B	MEK	Methyl ethyl ketone (2-Butanone)	4.1	J	1.25	5	ug/L
039GP13612	A039GP136	WG	N	09-Aug-05	SW8260B	MIBK	Methyl isobutyl ketone (4-Methyl-2-pentanone)	5	U	1.25	5	ug/L
039GP13612	A039GP136	WG	N	09-Aug-05	SW8260B	MTLNCL	Methylene Chloride	5	U	2	5	ug/L
039GP13612	A039GP136	WG	N	09-Aug-05	SW8260B	PCA	1,1,2,2-Tetrachloroethane	1	U	0.25	1	ug/L
039GP13612	A039GP136	WG	N	09-Aug-05	SW8260B	PCE	Tetrachloroethylene (PCE)	1	U	0.25	1	ug/L
039GP13612	A039GP136	WG	N	09-Aug-05	SW8260B	STY	Styrene	1	U	0.25	1	ug/L
039GP13612	A039GP136	WG	N	09-Aug-05	SW8260B	TBME	Bromoform	1	U	0.25	1	ug/L
039GP13612	A039GP136	WG	N	09-Aug-05	SW8260B	TCA111	1,1,1-Trichloroethane	1	U	0.3	1	ug/L
039GP13612	A039GP136	WG	N	09-Aug-05	SW8260B	TCA112	1,1,2-Trichloroethane	1	U	0.25	1	ug/L
039GP13612	A039GP136	WG	N	09-Aug-05	SW8260B	TCB123	1,2,3-Trichlorobenzene	1	UJ	0.3	1	ug/L

SampleID	StationID	Matrix	SampleType	DateCollected	Method	ParamID	Paramname	AnaValue	ProjQual	MDL	RL	Units
039GP13612	A039GP136	WG	N	09-Aug-05	SW8260B	TCB124	1,2,4-Trichlorobenzene	1	UJ	0.3	1	ug/L
039GP13612	A039GP136	WG	N	09-Aug-05	SW8260B	TCE	Trichloroethylene (TCE)	1	U	0.25	1	ug/L
039GP13612	A039GP136	WG	N	09-Aug-05	SW8260B	TCLME	Chloroform	1	U	0.25	1	ug/L
039GP13612	A039GP136	WG	N	09-Aug-05	SW8260B	VA	Vinyl acetate	5	U	1.5	5	ug/L
039GP13612	A039GP136	WG	N	09-Aug-05	SW8260B	VC	Vinyl chloride	1	U	0.5	1	ug/L
039GP13612	A039GP136	WG	N	09-Aug-05	SW8260B	XYLENES	Xylenes, Total	1	U	0.25	1	ug/L
039GP13612	A039GP136	WG	N	09-Aug-05	SW8260B	XYLMP	m+p Xylene	2	U	0.25	2	ug/L
039GP13612	A039GP136	WG	N	09-Aug-05	SW8260B	XYLO	o-Xylene	1	U	0.25	1	ug/L
039GP13628	A039GP136	WG	N	09-Aug-05	SW8260B	ACE	Acetone	2.2	J	1.25	5	ug/L
039GP13628	A039GP136	WG	N	09-Aug-05	SW8260B	BDCME	Bromodichloromethane	1	U	0.25	1	ug/L
039GP13628	A039GP136	WG	N	09-Aug-05	SW8260B	BRME	Bromomethane	1	U	0.5	1	ug/L
039GP13628	A039GP136	WG	N	09-Aug-05	SW8260B	BZ	Benzene	1	U	0.3	1	ug/L
039GP13628	A039GP136	WG	N	09-Aug-05	SW8260B	BZME	Toluene	1	U	0.25	1	ug/L
039GP13628	A039GP136	WG	N	09-Aug-05	SW8260B	CDS	Carbon Disulfide	5	U	1.25	5	ug/L
039GP13628	A039GP136	WG	N	09-Aug-05	SW8260B	CEVETH	2-Chloroethyl vinyl ether	5	U	1.5	5	ug/L
039GP13628	A039GP136	WG	N	09-Aug-05	SW8260B	CLBZ	Chlorobenzene	1	U	0.25	1	ug/L
039GP13628	A039GP136	WG	N	09-Aug-05	SW8260B	CLEA	Chloroethane	1	U	0.5	1	ug/L
039GP13628	A039GP136	WG	N	09-Aug-05	SW8260B	CLME	Chloromethane	1	U	0.5	1	ug/L
039GP13628	A039GP136	WG	N	09-Aug-05	SW8260B	CTCL	Carbon Tetrachloride	1	U	0.25	1	ug/L
039GP13628	A039GP136	WG	N	09-Aug-05	SW8260B	DBCME	Dibromochloromethane	1	U	0.25	1	ug/L
039GP13628	A039GP136	WG	N	09-Aug-05	SW8260B	DCA11	1,1-Dichloroethane	0.95	J	0.3	1	ug/L
039GP13628	A039GP136	WG	N	09-Aug-05	SW8260B	DCA12	1,2-Dichloroethane	1	U	0.25	1	ug/L
039GP13628	A039GP136	WG	N	09-Aug-05	SW8260B	DCBZ12	1,2-Dichlorobenzene	1	U	0.25	1	ug/L
039GP13628	A039GP136	WG	N	09-Aug-05	SW8260B	DCBZ13	1,3-Dichlorobenzene	1	U	0.25	1	ug/L
039GP13628	A039GP136	WG	N	09-Aug-05	SW8260B	DCBZ14	1,4-Dichlorobenzene	1	U	0.25	1	ug/L
039GP13628	A039GP136	WG	N	09-Aug-05	SW8260B	DCE11	1,1-Dichloroethene	1	U	0.3	1	ug/L
039GP13628	A039GP136	WG	N	09-Aug-05	SW8260B	DCE12C	cis-1,2-Dichloroethylene	22.2	=	0.3	1	ug/L
039GP13628	A039GP136	WG	N	09-Aug-05	SW8260B	DCE12T	trans-1,2-Dichloroethene	1	U	0.3	1	ug/L
039GP13628	A039GP136	WG	N	09-Aug-05	SW8260B	DCE12TOT	1,2-Dichloroethene (total)	22.2	=	0.3	1	ug/L
039GP13628	A039GP136	WG	N	09-Aug-05	SW8260B	DCP13C	cis-1,3-Dichloropropene	1	U	0.25	1	ug/L
039GP13628	A039GP136	WG	N	09-Aug-05	SW8260B	DCP13T	trans-1,3-Dichloropropene	1	U	0.25	1	ug/L
039GP13628	A039GP136	WG	N	09-Aug-05	SW8260B	DCPA12	1,2-Dichloropropane	1	U	0.25	1	ug/L
039GP13628	A039GP136	WG	N	09-Aug-05	SW8260B	EBZ	Ethylbenzene	1	U	0.25	1	ug/L
039GP13628	A039GP136	WG	N	09-Aug-05	SW8260B	HXO2	2-Hexanone	5	U	1.25	5	ug/L
039GP13628	A039GP136	WG	N	09-Aug-05	SW8260B	MEK	Methyl ethyl ketone (2-Butanone)	5	U	1.25	5	ug/L
039GP13628	A039GP136	WG	N	09-Aug-05	SW8260B	MIBK	Methyl isobutyl ketone (4-Methyl-2-pentanone)	5	U	1.25	5	ug/L

SampleID	StationID	Matrix	SampleType	DateCollected	Method	ParamID	Paramname	AnaValue	ProjQual	MDL	RL	Units
039GP13628	A039GP136	WG	N	09-Aug-05	SW8260B	MTLNCL	Methylene Chloride	5	U	2	5	ug/L
039GP13628	A039GP136	WG	N	09-Aug-05	SW8260B	PCA	1,1,2,2-Tetrachloroethane	1	U	0.25	1	ug/L
039GP13628	A039GP136	WG	N	09-Aug-05	SW8260B	PCE	Tetrachloroethylene (PCE)	0.66	J	0.25	1	ug/L
039GP13628	A039GP136	WG	N	09-Aug-05	SW8260B	STY	Styrene	1	U	0.25	1	ug/L
039GP13628	A039GP136	WG	N	09-Aug-05	SW8260B	TBME	Bromoform	1	U	0.25	1	ug/L
039GP13628	A039GP136	WG	N	09-Aug-05	SW8260B	TCA111	1,1,1-Trichloroethane	1	U	0.3	1	ug/L
039GP13628	A039GP136	WG	N	09-Aug-05	SW8260B	TCA112	1,1,2-Trichloroethane	1	U	0.25	1	ug/L
039GP13628	A039GP136	WG	N	09-Aug-05	SW8260B	TCB123	1,2,3-Trichlorobenzene	1	UJ	0.3	1	ug/L
039GP13628	A039GP136	WG	N	09-Aug-05	SW8260B	TCB124	1,2,4-Trichlorobenzene	1	UJ	0.3	1	ug/L
039GP13628	A039GP136	WG	N	09-Aug-05	SW8260B	TCE	Trichloroethylene (TCE)	5.2	=	0.25	1	ug/L
039GP13628	A039GP136	WG	N	09-Aug-05	SW8260B	TCLME	Chloroform	1	U	0.25	1	ug/L
039GP13628	A039GP136	WG	N	09-Aug-05	SW8260B	VA	Vinyl acetate	5	U	1.5	5	ug/L
039GP13628	A039GP136	WG	N	09-Aug-05	SW8260B	VC	Vinyl chloride	4	=	0.5	1	ug/L
039GP13628	A039GP136	WG	N	09-Aug-05	SW8260B	XYLENES	Xylenes, Total	1	U	0.25	1	ug/L
039GP13628	A039GP136	WG	N	09-Aug-05	SW8260B	XYLMP	m+p Xylene	2	U	0.25	2	ug/L
039GP13628	A039GP136	WG	N	09-Aug-05	SW8260B	XYLO	o-Xylene	1	U	0.25	1	ug/L
039GP13638	A039GP136	WG	N	09-Aug-05	SW8260B	ACE	Acetone	3	J	1.25	5	ug/L
039GP13638	A039GP136	WG	N	09-Aug-05	SW8260B	BDCME	Bromodichloromethane	1	U	0.25	1	ug/L
039GP13638	A039GP136	WG	N	09-Aug-05	SW8260B	BRME	Bromomethane	1	U	0.5	1	ug/L
039GP13638	A039GP136	WG	N	09-Aug-05	SW8260B	BZ	Benzene	0.33	J	0.3	1	ug/L
039GP13638	A039GP136	WG	N	09-Aug-05	SW8260B	BZME	Toluene	1	U	0.25	1	ug/L
039GP13638	A039GP136	WG	N	09-Aug-05	SW8260B	CDS	Carbon Disulfide	5	U	1.25	5	ug/L
039GP13638	A039GP136	WG	N	09-Aug-05	SW8260B	CEVETH	2-Chloroethyl vinyl ether	5	U	1.5	5	ug/L
039GP13638	A039GP136	WG	N	09-Aug-05	SW8260B	CLBZ	Chlorobenzene	1	U	0.25	1	ug/L
039GP13638	A039GP136	WG	N	09-Aug-05	SW8260B	CLEA	Chloroethane	1	U	0.5	1	ug/L
039GP13638	A039GP136	WG	N	09-Aug-05	SW8260B	CLME	Chloromethane	1	U	0.5	1	ug/L
039GP13638	A039GP136	WG	N	09-Aug-05	SW8260B	CTCL	Carbon Tetrachloride	1	U	0.25	1	ug/L
039GP13638	A039GP136	WG	N	09-Aug-05	SW8260B	DBCME	Dibromochloromethane	1	U	0.25	1	ug/L
039GP13638	A039GP136	WG	N	09-Aug-05	SW8260B	DCA11	1,1-Dichloroethane	1	U	0.3	1	ug/L
039GP13638	A039GP136	WG	N	09-Aug-05	SW8260B	DCA12	1,2-Dichloroethane	1	U	0.25	1	ug/L
039GP13638	A039GP136	WG	N	09-Aug-05	SW8260B	DCBZ12	1,2-Dichlorobenzene	1	U	0.25	1	ug/L
039GP13638	A039GP136	WG	N	09-Aug-05	SW8260B	DCBZ13	1,3-Dichlorobenzene	1	U	0.25	1	ug/L
039GP13638	A039GP136	WG	N	09-Aug-05	SW8260B	DCBZ14	1,4-Dichlorobenzene	1	U	0.25	1	ug/L
039GP13638	A039GP136	WG	N	09-Aug-05	SW8260B	DCE11	1,1-Dichloroethene	1	U	0.3	1	ug/L
039GP13638	A039GP136	WG	N	09-Aug-05	SW8260B	DCE12C	cis-1,2-Dichloroethylene	1	U	0.3	1	ug/L
039GP13638	A039GP136	WG	N	09-Aug-05	SW8260B	DCE12T	trans-1,2-Dichloroethene	1	U	0.3	1	ug/L

BIOBARRIER DPT RESULTS

SampleID	StationID	Matrix	SampleType	DateCollected	Method	ParamID	Paramname	AnaValue	ProjQual	MDL	RL	Units
039GP13638	A039GP136	WG	N	09-Aug-05	SW8260B	DCE12TOT	1,2-Dichloroethene (total)	1	U	0.3	1	ug/L
039GP13638	A039GP136	WG	N	09-Aug-05	SW8260B	DCP13C	cis-1,3-Dichloropropene	1	U	0.25	1	ug/L
039GP13638	A039GP136	WG	N	09-Aug-05	SW8260B	DCP13T	trans-1,3-Dichloropropene	1	U	0.25	1	ug/L
039GP13638	A039GP136	WG	N	09-Aug-05	SW8260B	DCPA12	1,2-Dichloropropane	1	U	0.25	1	ug/L
039GP13638	A039GP136	WG	N	09-Aug-05	SW8260B	EBZ	Ethylbenzene	1	U	0.25	1	ug/L
039GP13638	A039GP136	WG	N	09-Aug-05	SW8260B	HXO2	2-Hexanone	5	U	1.25	5	ug/L
039GP13638	A039GP136	WG	N	09-Aug-05	SW8260B	MEK	Methyl ethyl ketone (2-Butanone)	5	U	1.25	5	ug/L
039GP13638	A039GP136	WG	N	09-Aug-05	SW8260B	MIBK	Methyl isobutyl ketone (4-Methyl-2-pentanone)	5	U	1.25	5	ug/L
039GP13638	A039GP136	WG	N	09-Aug-05	SW8260B	MTLNCL	Methylene Chloride	5	U	2	5	ug/L
039GP13638	A039GP136	WG	N	09-Aug-05	SW8260B	PCA	1,1,2,2-Tetrachloroethane	1	U	0.25	1	ug/L
039GP13638	A039GP136	WG	N	09-Aug-05	SW8260B	PCE	Tetrachloroethylene (PCE)	1	U	0.25	1	ug/L
039GP13638	A039GP136	WG	N	09-Aug-05	SW8260B	STY	Styrene	1	U	0.25	1	ug/L
039GP13638	A039GP136	WG	N	09-Aug-05	SW8260B	TBME	Bromoform	1	U	0.25	1	ug/L
039GP13638	A039GP136	WG	N	09-Aug-05	SW8260B	TCA111	1,1,1-Trichloroethane	1	U	0.3	1	ug/L
039GP13638	A039GP136	WG	N	09-Aug-05	SW8260B	TCA112	1,1,2-Trichloroethane	1	U	0.25	1	ug/L
039GP13638	A039GP136	WG	N	09-Aug-05	SW8260B	TCB123	1,2,3-Trichlorobenzene	1	UJ	0.3	1	ug/L
039GP13638	A039GP136	WG	N	09-Aug-05	SW8260B	TCB124	1,2,4-Trichlorobenzene	1	UJ	0.3	1	ug/L
039GP13638	A039GP136	WG	N	09-Aug-05	SW8260B	TCE	Trichloroethylene (TCE)	1	U	0.25	1	ug/L
039GP13638	A039GP136	WG	N	09-Aug-05	SW8260B	TCLME	Chloroform	1	U	0.25	1	ug/L
039GP13638	A039GP136	WG	N	09-Aug-05	SW8260B	VA	Vinyl acetate	5	U	1.5	5	ug/L
039GP13638	A039GP136	WG	N	09-Aug-05	SW8260B	VC	Vinyl chloride	1	U	0.5	1	ug/L
039GP13638	A039GP136	WG	N	09-Aug-05	SW8260B	XYLENES	Xylenes, Total	1	U	0.25	1	ug/L
039GP13638	A039GP136	WG	N	09-Aug-05	SW8260B	XYLMP	m+p Xylene	2	U	0.25	2	ug/L
039GP13638	A039GP136	WG	N	09-Aug-05	SW8260B	XYLO	o-Xylene	1	U	0.25	1	ug/L

BIOBARRIER L. T RESULTS

SampleID	StationID	Matrix	SampleType	DateCollected	Method	ParamID	Paramname	AnaValue	ProjQual	MDL	RL	Units
039GP13712	A039GP137	WG	N	09-Aug-05	SW8260B	ACE	Acetone	4	J	1.25	5	ug/L
039GP13712	A039GP137	WG	N	09-Aug-05	SW8260B	BDCME	Bromodichloromethane	1	U	0.25	1	ug/L
039GP13712	A039GP137	WG	N	09-Aug-05	SW8260B	BRME	Bromomethane	1	U	0.5	1	ug/L
039GP13712	A039GP137	WG	N	09-Aug-05	SW8260B	BZ	Benzene	1	U	0.3	1	ug/L
039GP13712	A039GP137	WG	N	09-Aug-05	SW8260B	BZME	Toluene	1	U	0.25	1	ug/L
039GP13712	A039GP137	WG	N	09-Aug-05	SW8260B	CDS	Carbon Disulfide	5	U	1.25	5	ug/L
039GP13712	A039GP137	WG	N	09-Aug-05	SW8260B	CEVETH	2-Chloroethyl vinyl ether	5	U	1.5	5	ug/L
039GP13712	A039GP137	WG	N	09-Aug-05	SW8260B	CLBZ	Chlorobenzene	1	U	0.25	1	ug/L
039GP13712	A039GP137	WG	N	09-Aug-05	SW8260B	CLEA	Chloroethane	1	U	0.5	1	ug/L
039GP13712	A039GP137	WG	N	09-Aug-05	SW8260B	CLME	Chloromethane	1	U	0.5	1	ug/L
039GP13712	A039GP137	WG	N	09-Aug-05	SW8260B	CTCL	Carbon Tetrachloride	1	U	0.25	1	ug/L
039GP13712	A039GP137	WG	N	09-Aug-05	SW8260B	DBCME	Dibromochloromethane	1	U	0.25	1	ug/L
039GP13712	A039GP137	WG	N	09-Aug-05	SW8260B	DCA11	1,1-Dichloroethane	1	U	0.3	1	ug/L
039GP13712	A039GP137	WG	N	09-Aug-05	SW8260B	DCA12	1,2-Dichloroethane	1	U	0.25	1	ug/L
039GP13712	A039GP137	WG	N	09-Aug-05	SW8260B	DCBZ12	1,2-Dichlorobenzene	1	U	0.25	1	ug/L
039GP13712	A039GP137	WG	N	09-Aug-05	SW8260B	DCBZ13	1,3-Dichlorobenzene	1	U	0.25	1	ug/L
039GP13712	A039GP137	WG	N	09-Aug-05	SW8260B	DCBZ14	1,4-Dichlorobenzene	1	U	0.25	1	ug/L
039GP13712	A039GP137	WG	N	09-Aug-05	SW8260B	DCE11	1,1-Dichloroethene	1	U	0.3	1	ug/L
039GP13712	A039GP137	WG	N	09-Aug-05	SW8260B	DCE12C	cis-1,2-Dichloroethylene	1	U	0.3	1	ug/L
039GP13712	A039GP137	WG	N	09-Aug-05	SW8260B	DCE12T	trans-1,2-Dichloroethene	1	U	0.3	1	ug/L
039GP13712	A039GP137	WG	N	09-Aug-05	SW8260B	DCE12TOT	1,2-Dichloroethene (total)	1	U	0.3	1	ug/L
039GP13712	A039GP137	WG	N	09-Aug-05	SW8260B	DCP13C	cis-1,3-Dichloropropene	1	U	0.25	1	ug/L
039GP13712	A039GP137	WG	N	09-Aug-05	SW8260B	DCP13T	trans-1,3-Dichloropropene	1	U	0.25	1	ug/L
039GP13712	A039GP137	WG	N	09-Aug-05	SW8260B	DCPA12	1,2-Dichloropropane	1	U	0.25	1	ug/L
039GP13712	A039GP137	WG	N	09-Aug-05	SW8260B	EBZ	Ethylbenzene	1	U	0.25	1	ug/L
039GP13712	A039GP137	WG	N	09-Aug-05	SW8260B	HXO2	2-Hexanone	5	U	1.25	5	ug/L
039GP13712	A039GP137	WG	N	09-Aug-05	SW8260B	MEK	Methyl ethyl ketone (2-Butanone)	5	U	1.25	5	ug/L
039GP13712	A039GP137	WG	N	09-Aug-05	SW8260B	MIBK	Methyl isobutyl ketone (4-Methyl-2 pentanone)	5	U	1.25	5	ug/L
039GP13712	A039GP137	WG	N	09-Aug-05	SW8260B	MTLNCL	Methylene Chloride	5	U	2	5	ug/L
039GP13712	A039GP137	WG	N	09-Aug-05	SW8260B	PCA	1,1,2,2-Tetrachloroethane	1	U	0.25	1	ug/L
039GP13712	A039GP137	WG	N	09-Aug-05	SW8260B	PCE	Tetrachloroethylene (PCE)	1	U	0.25	1	ug/L
039GP13712	A039GP137	WG	N	09-Aug-05	SW8260B	STY	Styrene	1	U	0.25	1	ug/L
039GP13712	A039GP137	WG	N	09-Aug-05	SW8260B	TBME	Bromoform	1	U	0.25	1	ug/L
039GP13712	A039GP137	WG	N	09-Aug-05	SW8260B	TCA111	1,1,1-Trichloroethane	1	U	0.3	1	ug/L
039GP13712	A039GP137	WG	N	09-Aug-05	SW8260B	TCA112	1,1,2-Trichloroethane	1	U	0.25	1	ug/L

BIOBARRIER DPT RESULTS

SampleID	StationID	Matrix	SampleType	DateCollected	Method	ParamID	Paramname	AnaValue	ProjQual	MDL	RL	Units
039GP13712	A039GP137	WG	N	09-Aug-05	SW8260B	TCB123	1,2,3-Trichlorobenzene	1	UJ	0.3	1	ug/L
039GP13712	A039GP137	WG	N	09-Aug-05	SW8260B	TCB124	1,2,4-Trichlorobenzene	1	UJ	0.3	1	ug/L
039GP13712	A039GP137	WG	N	09-Aug-05	SW8260B	TCE	Trichloroethylene (TCE)	1	U	0.25	1	ug/L
039GP13712	A039GP137	WG	N	09-Aug-05	SW8260B	TCLME	Chloroform	1	U	0.25	1	ug/L
039GP13712	A039GP137	WG	N	09-Aug-05	SW8260B	VA	Vinyl acetate	5	U	1.5	5	ug/L
039GP13712	A039GP137	WG	N	09-Aug-05	SW8260B	VC	Vinyl chloride	1	U	0.5	1	ug/L
039GP13712	A039GP137	WG	N	09-Aug-05	SW8260B	XYLENES	Xylenes, Total	1	U	0.25	1	ug/L
039GP13712	A039GP137	WG	N	09-Aug-05	SW8260B	XYLMP	m+p Xylene	2	U	0.25	2	ug/L
039GP13712	A039GP137	WG	N	09-Aug-05	SW8260B	XYLO	o-Xylene	1	U	0.25	1	ug/L
039GP13728	A039GP137	WG	N	09-Aug-05	SW8260B	ACE	Acetone	3.4	J	1.25	5	ug/L
039GP13728	A039GP137	WG	N	09-Aug-05	SW8260B	BDCME	Bromodichloromethane	1	U	0.25	1	ug/L
039GP13728	A039GP137	WG	N	09-Aug-05	SW8260B	BRME	Bromomethane	1	U	0.5	1	ug/L
039GP13728	A039GP137	WG	N	09-Aug-05	SW8260B	BZ	Benzene	0.34	J	0.3	1	ug/L
039GP13728	A039GP137	WG	N	09-Aug-05	SW8260B	BZME	Toluene	1	U	0.25	1	ug/L
039GP13728	A039GP137	WG	N	09-Aug-05	SW8260B	CDS	Carbon Disulfide	5	U	1.25	5	ug/L
039GP13728	A039GP137	WG	N	09-Aug-05	SW8260B	CEVETH	2-Chloroethyl vinyl ether	5	U	1.5	5	ug/L
039GP13728	A039GP137	WG	N	09-Aug-05	SW8260B	CLBZ	Chlorobenzene	1	U	0.25	1	ug/L
039GP13728	A039GP137	WG	N	09-Aug-05	SW8260B	CLEA	Chloroethane	1	U	0.5	1	ug/L
039GP13728	A039GP137	WG	N	09-Aug-05	SW8260B	CLME	Chloromethane	1	U	0.5	1	ug/L
039GP13728	A039GP137	WG	N	09-Aug-05	SW8260B	CTCL	Carbon Tetrachloride	1	U	0.25	1	ug/L
039GP13728	A039GP137	WG	N	09-Aug-05	SW8260B	DBCME	Dibromochloromethane	1	U	0.25	1	ug/L
039GP13728	A039GP137	WG	N	09-Aug-05	SW8260B	DCA11	1,1-Dichloroethane	0.65	J	0.3	1	ug/L
039GP13728	A039GP137	WG	N	09-Aug-05	SW8260B	DCA12	1,2-Dichloroethane	1	U	0.25	1	ug/L
039GP13728	A039GP137	WG	N	09-Aug-05	SW8260B	DCBZ12	1,2-Dichlorobenzene	1	U	0.25	1	ug/L
039GP13728	A039GP137	WG	N	09-Aug-05	SW8260B	DCBZ13	1,3-Dichlorobenzene	1	U	0.25	1	ug/L
039GP13728	A039GP137	WG	N	09-Aug-05	SW8260B	DCBZ14	1,4-Dichlorobenzene	1	U	0.25	1	ug/L
039GP13728	A039GP137	WG	N	09-Aug-05	SW8260B	DCE11	1,1-Dichloroethene	1	U	0.3	1	ug/L
039GP13728	A039GP137	WG	N	09-Aug-05	SW8260B	DCE12C	cis-1,2-Dichloroethylene	16.9	=	0.3	1	ug/L
039GP13728	A039GP137	WG	N	09-Aug-05	SW8260B	DCE12T	trans-1,2-Dichloroethene	1	U	0.3	1	ug/L
039GP13728	A039GP137	WG	N	09-Aug-05	SW8260B	DCE12TOT	1,2-Dichloroethene (total)	16.9	=	0.3	1	ug/L
039GP13728	A039GP137	WG	N	09-Aug-05	SW8260B	DCP13C	cis-1,3-Dichloropropene	1	U	0.25	1	ug/L
039GP13728	A039GP137	WG	N	09-Aug-05	SW8260B	DCP13T	trans-1,3-Dichloropropene	1	U	0.25	1	ug/L
039GP13728	A039GP137	WG	N	09-Aug-05	SW8260B	DCPA12	1,2-Dichloropropane	1	U	0.25	1	ug/L
039GP13728	A039GP137	WG	N	09-Aug-05	SW8260B	EBZ	Ethylbenzene	1	U	0.25	1	ug/L
039GP13728	A039GP137	WG	N	09-Aug-05	SW8260B	HXO2	2-Hexanone	5	U	1.25	5	ug/L
039GP13728	A039GP137	WG	N	09-Aug-05	SW8260B	MEK	Methyl ethyl ketone (2-Butanone)	5	U	1.25	5	ug/L

SampleID	StationID	Matrix	SampleType	DateCollected	Method	ParamID	Paramname	AnaValue	ProjQual	MDL	RL	Units
039GP13728	A039GP137	WG	N	09-Aug-05	SW8260B	MIBK	Methyl isobutyl ketone (4-Methyl-2 pentanone)	5	U	1.25	5	ug/L
039GP13728	A039GP137	WG	N	09-Aug-05	SW8260B	MTLNCL	Methylene Chloride	5	U	2	5	ug/L
039GP13728	A039GP137	WG	N	09-Aug-05	SW8260B	PCA	1,1,2,2-Tetrachloroethane	1	U	0.25	1	ug/L
039GP13728	A039GP137	WG	N	09-Aug-05	SW8260B	PCE	Tetrachloroethylene (PCE)	1.3	=	0.25	1	ug/L
039GP13728	A039GP137	WG	N	09-Aug-05	SW8260B	STY	Styrene	1	U	0.25	1	ug/L
039GP13728	A039GP137	WG	N	09-Aug-05	SW8260B	TBME	Bromoform	1	U	0.25	1	ug/L
039GP13728	A039GP137	WG	N	09-Aug-05	SW8260B	TCA111	1,1,1-Trichloroethane	1	U	0.3	1	ug/L
039GP13728	A039GP137	WG	N	09-Aug-05	SW8260B	TCA112	1,1,2-Trichloroethane	1	U	0.25	1	ug/L
039GP13728	A039GP137	WG	N	09-Aug-05	SW8260B	TCB123	1,2,3-Trichlorobenzene	1	UJ	0.3	1	ug/L
039GP13728	A039GP137	WG	N	09-Aug-05	SW8260B	TCB124	1,2,4-Trichlorobenzene	1	UJ	0.3	1	ug/L
039GP13728	A039GP137	WG	N	09-Aug-05	SW8260B	TCE	Trichloroethylene (TCE)	8.5	=	0.25	1	ug/L
039GP13728	A039GP137	WG	N	09-Aug-05	SW8260B	TCLME	Chloroform	1	U	0.25	1	ug/L
039GP13728	A039GP137	WG	N	09-Aug-05	SW8260B	VA	Vinyl acetate	5	U	1.5	5	ug/L
039GP13728	A039GP137	WG	N	09-Aug-05	SW8260B	VC	Vinyl chloride	3.4	=	0.5	1	ug/L
039GP13728	A039GP137	WG	N	09-Aug-05	SW8260B	XYLENES	Xylenes, Total	1	U	0.25	1	ug/L
039GP13728	A039GP137	WG	N	09-Aug-05	SW8260B	XYLMP	m+p Xylene	2	U	0.25	2	ug/L
039GP13728	A039GP137	WG	N	09-Aug-05	SW8260B	XYLO	o-Xylene	1	U	0.25	1	ug/L
039GP13738	A039GP137	WG	N	09-Aug-05	SW8260B	ACE	Acetone	3.8	J	1.25	5	ug/L
039GP13738	A039GP137	WG	N	09-Aug-05	SW8260B	BDCME	Bromodichloromethane	1	U	0.25	1	ug/L
039GP13738	A039GP137	WG	N	09-Aug-05	SW8260B	BRME	Bromomethane	1	U	0.5	1	ug/L
039GP13738	A039GP137	WG	N	09-Aug-05	SW8260B	BZ	Benzene	0.41	J	0.3	1	ug/L
039GP13738	A039GP137	WG	N	09-Aug-05	SW8260B	BZME	Toluene	1	U	0.25	1	ug/L
039GP13738	A039GP137	WG	N	09-Aug-05	SW8260B	CDS	Carbon Disulfide	5	U	1.25	5	ug/L
039GP13738	A039GP137	WG	N	09-Aug-05	SW8260B	CEVETH	2-Chloroethyl vinyl ether	5	U	1.5	5	ug/L
039GP13738	A039GP137	WG	N	09-Aug-05	SW8260B	CLBZ	Chlorobenzene	1	U	0.25	1	ug/L
039GP13738	A039GP137	WG	N	09-Aug-05	SW8260B	CLEA	Chloroethane	1	U	0.5	1	ug/L
039GP13738	A039GP137	WG	N	09-Aug-05	SW8260B	CLME	Chloromethane	1	U	0.5	1	ug/L
039GP13738	A039GP137	WG	N	09-Aug-05	SW8260B	CTCL	Carbon Tetrachloride	1	U	0.25	1	ug/L
039GP13738	A039GP137	WG	N	09-Aug-05	SW8260B	DBCME	Dibromochloromethane	1	U	0.25	1	ug/L
039GP13738	A039GP137	WG	N	09-Aug-05	SW8260B	DCA11	1,1-Dichloroethane	1	U	0.3	1	ug/L
039GP13738	A039GP137	WG	N	09-Aug-05	SW8260B	DCA12	1,2-Dichloroethane	1	U	0.25	1	ug/L
039GP13738	A039GP137	WG	N	09-Aug-05	SW8260B	DCBZ12	1,2-Dichlorobenzene	1	U	0.25	1	ug/L
039GP13738	A039GP137	WG	N	09-Aug-05	SW8260B	DCBZ13	1,3-Dichlorobenzene	1	U	0.25	1	ug/L
039GP13738	A039GP137	WG	N	09-Aug-05	SW8260B	DCBZ14	1,4-Dichlorobenzene	1	U	0.25	1	ug/L
039GP13738	A039GP137	WG	N	09-Aug-05	SW8260B	DCE11	1,1-Dichloroethene	1	U	0.3	1	ug/L
039GP13738	A039GP137	WG	N	09-Aug-05	SW8260B	DCE12C	cis-1,2-Dichloroethylene	6.5	=	0.3	1	ug/L

BIOBARRIER DPT RESULTS

SampleID	StationID	Matrix	SampleType	DateCollected	Method	ParamID	Paramname	AnaValue	ProjQual	MDL	RL	Units
039GP13738	A039GP137	WG	N	09-Aug-05	SW8260B	DCE12T	trans-1,2-Dichloroethene	1	U	0.3	1	ug/L
039GP13738	A039GP137	WG	N	09-Aug-05	SW8260B	DCE12TOT	1,2-Dichloroethene (total)	6.5	=	0.3	1	ug/L
039GP13738	A039GP137	WG	N	09-Aug-05	SW8260B	DCP13C	cis-1,3-Dichloropropene	1	U	0.25	1	ug/L
039GP13738	A039GP137	WG	N	09-Aug-05	SW8260B	DCP13T	trans-1,3-Dichloropropene	1	U	0.25	1	ug/L
039GP13738	A039GP137	WG	N	09-Aug-05	SW8260B	DCPA12	1,2-Dichloropropane	1	U	0.25	1	ug/L
039GP13738	A039GP137	WG	N	09-Aug-05	SW8260B	EBZ	Ethylbenzene	1	U	0.25	1	ug/L
039GP13738	A039GP137	WG	N	09-Aug-05	SW8260B	HXO2	2-Hexanone	5	U	1.25	5	ug/L
039GP13738	A039GP137	WG	N	09-Aug-05	SW8260B	MEK	Methyl ethyl ketone (2-Butanone)	5	U	1.25	5	ug/L
039GP13738	A039GP137	WG	N	09-Aug-05	SW8260B	MIBK	Methyl isobutyl ketone (4-Methyl-2 pentanone)	5	U	1.25	5	ug/L
039GP13738	A039GP137	WG	N	09-Aug-05	SW8260B	MTLNCL	Methylene Chloride	5	U	2	5	ug/L
039GP13738	A039GP137	WG	N	09-Aug-05	SW8260B	PCA	1,1,2,2-Tetrachloroethane	1	U	0.25	1	ug/L
039GP13738	A039GP137	WG	N	09-Aug-05	SW8260B	PCE	Tetrachloroethylene (PCE)	1	U	0.25	1	ug/L
039GP13738	A039GP137	WG	N	09-Aug-05	SW8260B	STY	Styrene	1	U	0.25	1	ug/L
039GP13738	A039GP137	WG	N	09-Aug-05	SW8260B	TBME	Bromoform	1	U	0.25	1	ug/L
039GP13738	A039GP137	WG	N	09-Aug-05	SW8260B	TCA111	1,1,1-Trichloroethane	1	U	0.3	1	ug/L
039GP13738	A039GP137	WG	N	09-Aug-05	SW8260B	TCA112	1,1,2-Trichloroethane	1	U	0.25	1	ug/L
039GP13738	A039GP137	WG	N	09-Aug-05	SW8260B	TCB123	1,2,3-Trichlorobenzene	1	UJ	0.3	1	ug/L
039GP13738	A039GP137	WG	N	09-Aug-05	SW8260B	TCB124	1,2,4-Trichlorobenzene	1	UJ	0.3	1	ug/L
039GP13738	A039GP137	WG	N	09-Aug-05	SW8260B	TCE	Trichloroethylene (TCE)	1	U	0.25	1	ug/L
039GP13738	A039GP137	WG	N	09-Aug-05	SW8260B	TCLME	Chloroform	1	U	0.25	1	ug/L
039GP13738	A039GP137	WG	N	09-Aug-05	SW8260B	VA	Vinyl acetate	5	U	1.5	5	ug/L
039GP13738	A039GP137	WG	N	09-Aug-05	SW8260B	VC	Vinyl chloride	1.4	=	0.5	1	ug/L
039GP13738	A039GP137	WG	N	09-Aug-05	SW8260B	XYLENES	Xylenes, Total	1	U	0.25	1	ug/L
039GP13738	A039GP137	WG	N	09-Aug-05	SW8260B	XYLMP	m+p Xylene	2	U	0.25	2	ug/L
039GP13738	A039GP137	WG	N	09-Aug-05	SW8260B	XYLO	o-Xylene	1	U	0.25	1	ug/L

SampleID	StationID	Matrix	SampleType	DateCollected	Method	ParamID	Paramname	AnaValue	ProQual	MDL	RL	Units
039GP13812	A039GP138	WG	N	10-Aug-05	SW8260B	ACE	Acetone	5.8	=	1.25	5	ug/L
039GP13812	A039GP138	WG	N	10-Aug-05	SW8260B	BDCME	Bromodichloromethane	1	U	0.25	1	ug/L
039GP13812	A039GP138	WG	N	10-Aug-05	SW8260B	BRME	Bromomethane	1	U	0.5	1	ug/L
039GP13812	A039GP138	WG	N	10-Aug-05	SW8260B	BZ	Benzene	1	U	0.3	1	ug/L
039GP13812	A039GP138	WG	N	10-Aug-05	SW8260B	BZME	Toluene	1	U	0.25	1	ug/L
039GP13812	A039GP138	WG	N	10-Aug-05	SW8260B	CDS	Carbon Disulfide	5	U	1.25	5	ug/L
039GP13812	A039GP138	WG	N	10-Aug-05	SW8260B	CEVETH	2-Chloroethyl vinyl ether	5	U	1.5	5	ug/L
039GP13812	A039GP138	WG	N	10-Aug-05	SW8260B	CLBZ	Chlorobenzene	1	U	0.25	1	ug/L
039GP13812	A039GP138	WG	N	10-Aug-05	SW8260B	CLEA	Chloroethane	1	U	0.5	1	ug/L
039GP13812	A039GP138	WG	N	10-Aug-05	SW8260B	CLME	Chloromethane	1	U	0.5	1	ug/L
039GP13812	A039GP138	WG	N	10-Aug-05	SW8260B	CTCL	Carbon Tetrachloride	1	U	0.25	1	ug/L
039GP13812	A039GP138	WG	N	10-Aug-05	SW8260B	DBCME	Dibromochloromethane	1	U	0.25	1	ug/L
039GP13812	A039GP138	WG	N	10-Aug-05	SW8260B	DCA11	1,1-Dichloroethane	1	U	0.3	1	ug/L
039GP13812	A039GP138	WG	N	10-Aug-05	SW8260B	DCA12	1,2-Dichloroethane	1	U	0.25	1	ug/L
039GP13812	A039GP138	WG	N	10-Aug-05	SW8260B	DCBZ12	1,2-Dichlorobenzene	1	U	0.25	1	ug/L
039GP13812	A039GP138	WG	N	10-Aug-05	SW8260B	DCBZ13	1,3-Dichlorobenzene	1	U	0.25	1	ug/L
039GP13812	A039GP138	WG	N	10-Aug-05	SW8260B	DCBZ14	1,4-Dichlorobenzene	1	U	0.25	1	ug/L
039GP13812	A039GP138	WG	N	10-Aug-05	SW8260B	DCE11	1,1-Dichloroethene	1	U	0.3	1	ug/L
039GP13812	A039GP138	WG	N	10-Aug-05	SW8260B	DCE12C	cis-1,2-Dichloroethylene	1	U	0.3	1	ug/L
039GP13812	A039GP138	WG	N	10-Aug-05	SW8260B	DCE12T	trans-1,2-Dichloroethene	1	U	0.3	1	ug/L
039GP13812	A039GP138	WG	N	10-Aug-05	SW8260B	DCE12TOT	1,2-Dichloroethene (total)	1	U	0.3	1	ug/L
039GP13812	A039GP138	WG	N	10-Aug-05	SW8260B	DCP13C	cis-1,3-Dichloropropene	1	U	0.25	1	ug/L
039GP13812	A039GP138	WG	N	10-Aug-05	SW8260B	DCP13T	trans-1,3-Dichloropropene	1	U	0.25	1	ug/L
039GP13812	A039GP138	WG	N	10-Aug-05	SW8260B	DCPA12	1,2-Dichloropropane	1	U	0.25	1	ug/L
039GP13812	A039GP138	WG	N	10-Aug-05	SW8260B	EBZ	Ethylbenzene	1	U	0.25	1	ug/L
039GP13812	A039GP138	WG	N	10-Aug-05	SW8260B	HXO2	2-Hexanone	5	U	1.25	5	ug/L
039GP13812	A039GP138	WG	N	10-Aug-05	SW8260B	MEK	Methyl ethyl ketone (2-Butanone)	5	U	1.25	5	ug/L
039GP13812	A039GP138	WG	N	10-Aug-05	SW8260B	MIBK	Methyl isobutyl ketone (4-Methyl-2-pentanone)	5	U	1.25	5	ug/L
039GP13812	A039GP138	WG	N	10-Aug-05	SW8260B	MTLNCL	Methylene Chloride	5	U	2	5	ug/L
039GP13812	A039GP138	WG	N	10-Aug-05	SW8260B	PCA	1,1,2,2-Tetrachloroethane	1	U	0.25	1	ug/L
039GP13812	A039GP138	WG	N	10-Aug-05	SW8260B	PCE	Tetrachloroethylene (PCE)	1	U	0.25	1	ug/L
039GP13812	A039GP138	WG	N	10-Aug-05	SW8260B	STY	Styrene	1	U	0.25	1	ug/L
039GP13812	A039GP138	WG	N	10-Aug-05	SW8260B	TBME	Bromoform	1	U	0.25	1	ug/L
039GP13812	A039GP138	WG	N	10-Aug-05	SW8260B	TCA111	1,1,1-Trichloroethane	1	U	0.3	1	ug/L
039GP13812	A039GP138	WG	N	10-Aug-05	SW8260B	TCA112	1,1,2-Trichloroethane	1	U	0.25	1	ug/L

SampleID	StationID	Matrix	SampleType	DateCollected	Method	ParamID	Paramname	AnaValue	ProjQual	MDL	RL	Units
039GP13812	A039GP138	WG	N	10-Aug-05	SW8260B	TCB123	1,2,3-Trichlorobenzene	1	UJ	0.3	1	ug/L
039GP13812	A039GP138	WG	N	10-Aug-05	SW8260B	TCB124	1,2,4-Trichlorobenzene	1	UJ	0.3	1	ug/L
039GP13812	A039GP138	WG	N	10-Aug-05	SW8260B	TCE	Trichloroethylene (TCE)	1	U	0.25	1	ug/L
039GP13812	A039GP138	WG	N	10-Aug-05	SW8260B	TCLME	Chloroform	1	U	0.25	1	ug/L
039GP13812	A039GP138	WG	N	10-Aug-05	SW8260B	VA	Vinyl acetate	5	U	1.5	5	ug/L
039GP13812	A039GP138	WG	N	10-Aug-05	SW8260B	VC	Vinyl chloride	1	U	0.5	1	ug/L
039GP13812	A039GP138	WG	N	10-Aug-05	SW8260B	XYLENES	Xylenes, Total	1	U	0.25	1	ug/L
039GP13812	A039GP138	WG	N	10-Aug-05	SW8260B	XYLMP	m+p Xylene	2	U	0.25	2	ug/L
039GP13812	A039GP138	WG	N	10-Aug-05	SW8260B	XYLO	o-Xylene	1	U	0.25	1	ug/L
039GP13828	A039GP138	WG	N	10-Aug-05	SW8260B	ACE	Acetone	2.4	J	1.25	5	ug/L
039GP13828	A039GP138	WG	N	10-Aug-05	SW8260B	BDCME	Bromodichloromethane	1	U	0.25	1	ug/L
039GP13828	A039GP138	WG	N	10-Aug-05	SW8260B	BRME	Bromomethane	1	U	0.5	1	ug/L
039GP13828	A039GP138	WG	N	10-Aug-05	SW8260B	BZ	Benzene	1	U	0.3	1	ug/L
039GP13828	A039GP138	WG	N	10-Aug-05	SW8260B	BZME	Toluene	1	U	0.25	1	ug/L
039GP13828	A039GP138	WG	N	10-Aug-05	SW8260B	CDS	Carbon Disulfide	5	U	1.25	5	ug/L
039GP13828	A039GP138	WG	N	10-Aug-05	SW8260B	CEVETH	2-Chloroethyl vinyl ether	5	U	1.5	5	ug/L
039GP13828	A039GP138	WG	N	10-Aug-05	SW8260B	CLBZ	Chlorobenzene	1	U	0.25	1	ug/L
039GP13828	A039GP138	WG	N	10-Aug-05	SW8260B	CLEA	Chloroethane	1	U	0.5	1	ug/L
039GP13828	A039GP138	WG	N	10-Aug-05	SW8260B	CLME	Chloromethane	1	U	0.5	1	ug/L
039GP13828	A039GP138	WG	N	10-Aug-05	SW8260B	CTCL	Carbon Tetrachloride	1	U	0.25	1	ug/L
039GP13828	A039GP138	WG	N	10-Aug-05	SW8260B	DBCME	Dibromochloromethane	1	U	0.25	1	ug/L
039GP13828	A039GP138	WG	N	10-Aug-05	SW8260B	DCA11	1,1-Dichloroethane	0.89	J	0.3	1	ug/L
039GP13828	A039GP138	WG	N	10-Aug-05	SW8260B	DCA12	1,2-Dichloroethane	1	U	0.25	1	ug/L
039GP13828	A039GP138	WG	N	10-Aug-05	SW8260B	DCBZ12	1,2-Dichlorobenzene	1	U	0.25	1	ug/L
039GP13828	A039GP138	WG	N	10-Aug-05	SW8260B	DCBZ13	1,3-Dichlorobenzene	1	U	0.25	1	ug/L
039GP13828	A039GP138	WG	N	10-Aug-05	SW8260B	DCBZ14	1,4-Dichlorobenzene	1	U	0.25	1	ug/L
039GP13828	A039GP138	WG	N	10-Aug-05	SW8260B	DCE11	1,1-Dichloroethene	1	U	0.3	1	ug/L
039GP13828	A039GP138	WG	N	10-Aug-05	SW8260B	DCE12C	cis-1,2-Dichloroethylene	26.1	=	0.3	1	ug/L
039GP13828	A039GP138	WG	N	10-Aug-05	SW8260B	DCE12T	trans-1,2-Dichloroethene	0.35	J	0.3	1	ug/L
039GP13828	A039GP138	WG	N	10-Aug-05	SW8260B	DCE12TOT	1,2-Dichloroethene (total)	26.5	=	0.3	1	ug/L
039GP13828	A039GP138	WG	N	10-Aug-05	SW8260B	DCP13C	cis-1,3-Dichloropropene	1	U	0.25	1	ug/L
039GP13828	A039GP138	WG	N	10-Aug-05	SW8260B	DCP13T	trans-1,3-Dichloropropene	1	U	0.25	1	ug/L
039GP13828	A039GP138	WG	N	10-Aug-05	SW8260B	DCPA12	1,2-Dichloropropane	1	U	0.25	1	ug/L
039GP13828	A039GP138	WG	N	10-Aug-05	SW8260B	EBZ	Ethylbenzene	1	U	0.25	1	ug/L
039GP13828	A039GP138	WG	N	10-Aug-05	SW8260B	HXO2	2-Hexanone	5	U	1.25	5	ug/L
039GP13828	A039GP138	WG	N	10-Aug-05	SW8260B	MEK	Methyl ethyl ketone (2-Butanone)	5	U	1.25	5	ug/L

SampleID	StationID	Matrix	SampleType	DateCollected	Method	ParamID	Paramname	AnaValue	ProjQual	MDL	RL	Units
039GP13828	A039GP138	WG	N	10-Aug-05	SW8260B	MIBK	Methyl isobutyl ketone (4-Methyl-2-pentanone)	5	U	1.25	5	ug/L
039GP13828	A039GP138	WG	N	10-Aug-05	SW8260B	MTLNCL	Methylene Chloride	5	U	2	5	ug/L
039GP13828	A039GP138	WG	N	10-Aug-05	SW8260B	PCA	1,1,2,2-Tetrachloroethane	1	U	0.25	1	ug/L
039GP13828	A039GP138	WG	N	10-Aug-05	SW8260B	PCE	Tetrachloroethylene (PCE)	1	U	0.25	1	ug/L
039GP13828	A039GP138	WG	N	10-Aug-05	SW8260B	STY	Styrene	1	U	0.25	1	ug/L
039GP13828	A039GP138	WG	N	10-Aug-05	SW8260B	TBME	Bromoform	1	U	0.25	1	ug/L
039GP13828	A039GP138	WG	N	10-Aug-05	SW8260B	TCA111	1,1,1-Trichloroethane	1	U	0.3	1	ug/L
039GP13828	A039GP138	WG	N	10-Aug-05	SW8260B	TCA112	1,1,2-Trichloroethane	1	U	0.25	1	ug/L
039GP13828	A039GP138	WG	N	10-Aug-05	SW8260B	TCB123	1,2,3-Trichlorobenzene	1	UJ	0.3	1	ug/L
039GP13828	A039GP138	WG	N	10-Aug-05	SW8260B	TCB124	1,2,4-Trichlorobenzene	1	UJ	0.3	1	ug/L
039GP13828	A039GP138	WG	N	10-Aug-05	SW8260B	TCE	Trichloroethylene (TCE)	8.8	=	0.25	1	ug/L
039GP13828	A039GP138	WG	N	10-Aug-05	SW8260B	TCLME	Chloroform	1	U	0.25	1	ug/L
039GP13828	A039GP138	WG	N	10-Aug-05	SW8260B	VA	Vinyl acetate	5	U	1.5	5	ug/L
039GP13828	A039GP138	WG	N	10-Aug-05	SW8260B	VC	Vinyl chloride	4.6	=	0.5	1	ug/L
039GP13828	A039GP138	WG	N	10-Aug-05	SW8260B	XYLENES	Xylenes, Total	1	U	0.25	1	ug/L
039GP13828	A039GP138	WG	N	10-Aug-05	SW8260B	XYLMP	m+p Xylene	2	U	0.25	2	ug/L
039GP13828	A039GP138	WG	N	10-Aug-05	SW8260B	XYLO	o-Xylene	1	U	0.25	1	ug/L
039GP13838	A039GP138	WG	N	10-Aug-05	SW8260B	ACE	Acetone	2.7	J	1.25	5	ug/L
039GP13838	A039GP138	WG	N	10-Aug-05	SW8260B	BDCME	Bromodichloromethane	1	U	0.25	1	ug/L
039GP13838	A039GP138	WG	N	10-Aug-05	SW8260B	BRME	Bromomethane	1	U	0.5	1	ug/L
039GP13838	A039GP138	WG	N	10-Aug-05	SW8260B	BZ	Benzene	0.3	J	0.3	1	ug/L
039GP13838	A039GP138	WG	N	10-Aug-05	SW8260B	BZME	Toluene	1	U	0.25	1	ug/L
039GP13838	A039GP138	WG	N	10-Aug-05	SW8260B	CDS	Carbon Disulfide	1.7	J	1.25	5	ug/L
039GP13838	A039GP138	WG	N	10-Aug-05	SW8260B	CEVETH	2-Chloroethyl vinyl ether	5	U	1.5	5	ug/L
039GP13838	A039GP138	WG	N	10-Aug-05	SW8260B	CLBZ	Chlorobenzene	1	U	0.25	1	ug/L
039GP13838	A039GP138	WG	N	10-Aug-05	SW8260B	CLEA	Chloroethane	1	U	0.5	1	ug/L
039GP13838	A039GP138	WG	N	10-Aug-05	SW8260B	CLME	Chloromethane	1	U	0.5	1	ug/L
039GP13838	A039GP138	WG	N	10-Aug-05	SW8260B	CTCL	Carbon Tetrachloride	1	U	0.25	1	ug/L
039GP13838	A039GP138	WG	N	10-Aug-05	SW8260B	DBCME	Dibromochloromethane	1	U	0.25	1	ug/L
039GP13838	A039GP138	WG	N	10-Aug-05	SW8260B	DCA11	1,1-Dichloroethane	1	U	0.3	1	ug/L
039GP13838	A039GP138	WG	N	10-Aug-05	SW8260B	DCA12	1,2-Dichloroethane	1	U	0.25	1	ug/L
039GP13838	A039GP138	WG	N	10-Aug-05	SW8260B	DCBZ12	1,2-Dichlorobenzene	1	U	0.25	1	ug/L
039GP13838	A039GP138	WG	N	10-Aug-05	SW8260B	DCBZ13	1,3-Dichlorobenzene	1	U	0.25	1	ug/L
039GP13838	A039GP138	WG	N	10-Aug-05	SW8260B	DCBZ14	1,4-Dichlorobenzene	1	U	0.25	1	ug/L
039GP13838	A039GP138	WG	N	10-Aug-05	SW8260B	DCE11	1,1-Dichloroethene	1	U	0.3	1	ug/L
039GP13838	A039GP138	WG	N	10-Aug-05	SW8260B	DCE12C	cis-1,2-Dichloroethylene	1	U	0.3	1	ug/L

BIOBARRIER DPT RESULTS

SampleID	StationID	Matrix	SampleType	DateCollected	Method	ParamID	Paramname	AnaValue	ProjQual	MDL	RL	Units
039GP13838	A039GP138	WG	N	10-Aug-05	SW8260B	DCE12T	trans-1,2-Dichloroethene	1	U	0.3	1	ug/L
039GP13838	A039GP138	WG	N	10-Aug-05	SW8260B	DCE12TOT	1,2-Dichloroethene (total)	1	U	0.3	1	ug/L
039GP13838	A039GP138	WG	N	10-Aug-05	SW8260B	DCP13C	cis-1,3-Dichloropropene	1	U	0.25	1	ug/L
039GP13838	A039GP138	WG	N	10-Aug-05	SW8260B	DCP13T	trans-1,3-Dichloropropene	1	U	0.25	1	ug/L
039GP13838	A039GP138	WG	N	10-Aug-05	SW8260B	DCPA12	1,2-Dichloropropane	1	U	0.25	1	ug/L
039GP13838	A039GP138	WG	N	10-Aug-05	SW8260B	EBZ	Ethylbenzene	1	U	0.25	1	ug/L
039GP13838	A039GP138	WG	N	10-Aug-05	SW8260B	HXO2	2-Hexanone	5	U	1.25	5	ug/L
039GP13838	A039GP138	WG	N	10-Aug-05	SW8260B	MEK	Methyl ethyl ketone (2-Butanone)	5	U	1.25	5	ug/L
039GP13838	A039GP138	WG	N	10-Aug-05	SW8260B	MIBK	Methyl isobutyl ketone (4-Methyl-2-pentanone)	5	U	1.25	5	ug/L
039GP13838	A039GP138	WG	N	10-Aug-05	SW8260B	MTLNCL	Methylene Chloride	5	U	2	5	ug/L
039GP13838	A039GP138	WG	N	10-Aug-05	SW8260B	PCA	1,1,2,2-Tetrachloroethane	1	U	0.25	1	ug/L
039GP13838	A039GP138	WG	N	10-Aug-05	SW8260B	PCE	Tetrachloroethylene (PCE)	1	U	0.25	1	ug/L
039GP13838	A039GP138	WG	N	10-Aug-05	SW8260B	STY	Styrene	1	U	0.25	1	ug/L
039GP13838	A039GP138	WG	N	10-Aug-05	SW8260B	TBME	Bromoform	1	U	0.25	1	ug/L
039GP13838	A039GP138	WG	N	10-Aug-05	SW8260B	TCA111	1,1,1-Trichloroethane	1	U	0.3	1	ug/L
039GP13838	A039GP138	WG	N	10-Aug-05	SW8260B	TCA112	1,1,2-Trichloroethane	1	U	0.25	1	ug/L
039GP13838	A039GP138	WG	N	10-Aug-05	SW8260B	TCB123	1,2,3-Trichlorobenzene	1	UJ	0.3	1	ug/L
039GP13838	A039GP138	WG	N	10-Aug-05	SW8260B	TCB124	1,2,4-Trichlorobenzene	1	UJ	0.3	1	ug/L
039GP13838	A039GP138	WG	N	10-Aug-05	SW8260B	TCE	Trichloroethylene (TCE)	1	U	0.25	1	ug/L
039GP13838	A039GP138	WG	N	10-Aug-05	SW8260B	TCLME	Chloroform	1	U	0.25	1	ug/L
039GP13838	A039GP138	WG	N	10-Aug-05	SW8260B	VA	Vinyl acetate	5	U	1.5	5	ug/L
039GP13838	A039GP138	WG	N	10-Aug-05	SW8260B	VC	Vinyl chloride	1	U	0.5	1	ug/L
039GP13838	A039GP138	WG	N	10-Aug-05	SW8260B	XYLENES	Xylenes, Total	1	U	0.25	1	ug/L
039GP13838	A039GP138	WG	N	10-Aug-05	SW8260B	XYLMP	m+p Xylene	2	U	0.25	2	ug/L
039GP13838	A039GP138	WG	N	10-Aug-05	SW8260B	XYLO	o-Xylene	1	U	0.25	1	ug/L
039HP13828	A039GP138	WG	FD	10-Aug-05	SW8260B	ACE	Acetone	2.8	J	1.25	5	ug/L
039HP13828	A039GP138	WG	FD	10-Aug-05	SW8260B	BDCME	Bromodichloromethane	1	U	0.25	1	ug/L
039HP13828	A039GP138	WG	FD	10-Aug-05	SW8260B	BRME	Bromomethane	1	U	0.5	1	ug/L
039HP13828	A039GP138	WG	FD	10-Aug-05	SW8260B	BZ	Benzene	1	U	0.3	1	ug/L
039HP13828	A039GP138	WG	FD	10-Aug-05	SW8260B	BZME	Toluene	1	U	0.25	1	ug/L
039HP13828	A039GP138	WG	FD	10-Aug-05	SW8260B	CDS	Carbon Disulfide	5	U	1.25	5	ug/L
039HP13828	A039GP138	WG	FD	10-Aug-05	SW8260B	CEVETH	2-Chloroethyl vinyl ether	5	U	1.5	5	ug/L
039HP13828	A039GP138	WG	FD	10-Aug-05	SW8260B	CLBZ	Chlorobenzene	1	U	0.25	1	ug/L
039HP13828	A039GP138	WG	FD	10-Aug-05	SW8260B	CLEA	Chloroethane	1	U	0.5	1	ug/L
039HP13828	A039GP138	WG	FD	10-Aug-05	SW8260B	CLME	Chloromethane	1	U	0.5	1	ug/L

SampleID	StationID	Matrix	SampleType	DateCollected	Method	ParamID	Paramname	AnaValue	ProjQual	MDL	RL	Units
039HP13828	A039GP138	WG	FD	10-Aug-05	SW8260B	CTCL	Carbon Tetrachloride	1	U	0.25	1	ug/L
039HP13828	A039GP138	WG	FD	10-Aug-05	SW8260B	DBCME	Dibromochloromethane	1	U	0.25	1	ug/L
039HP13828	A039GP138	WG	FD	10-Aug-05	SW8260B	DCA11	1,1-Dichloroethane	0.98	J	0.3	1	ug/L
039HP13828	A039GP138	WG	FD	10-Aug-05	SW8260B	DCA12	1,2-Dichloroethane	1	U	0.25	1	ug/L
039HP13828	A039GP138	WG	FD	10-Aug-05	SW8260B	DCBZ12	1,2-Dichlorobenzene	1	U	0.25	1	ug/L
039HP13828	A039GP138	WG	FD	10-Aug-05	SW8260B	DCBZ13	1,3-Dichlorobenzene	1	U	0.25	1	ug/L
039HP13828	A039GP138	WG	FD	10-Aug-05	SW8260B	DCBZ14	1,4-Dichlorobenzene	1	U	0.25	1	ug/L
039HP13828	A039GP138	WG	FD	10-Aug-05	SW8260B	DCE11	1,1-Dichloroethene	1	U	0.3	1	ug/L
039HP13828	A039GP138	WG	FD	10-Aug-05	SW8260B	DCE12C	cis-1,2-Dichloroethylene	26.9	=	0.3	1	ug/L
039HP13828	A039GP138	WG	FD	10-Aug-05	SW8260B	DCE12T	trans-1,2-Dichloroethene	1	U	0.3	1	ug/L
039HP13828	A039GP138	WG	FD	10-Aug-05	SW8260B	DCE12TOT	1,2-Dichloroethene (total)	26.9	=	0.3	1	ug/L
039HP13828	A039GP138	WG	FD	10-Aug-05	SW8260B	DCP13C	cis-1,3-Dichloropropene	1	U	0.25	1	ug/L
039HP13828	A039GP138	WG	FD	10-Aug-05	SW8260B	DCP13T	trans-1,3-Dichloropropene	1	U	0.25	1	ug/L
039HP13828	A039GP138	WG	FD	10-Aug-05	SW8260B	DCPA12	1,2-Dichloropropane	1	U	0.25	1	ug/L
039HP13828	A039GP138	WG	FD	10-Aug-05	SW8260B	EBZ	Ethylbenzene	1	U	0.25	1	ug/L
039HP13828	A039GP138	WG	FD	10-Aug-05	SW8260B	HXO2	2-Hexanone	5	U	1.25	5	ug/L
039HP13828	A039GP138	WG	FD	10-Aug-05	SW8260B	MEK	Methyl ethyl ketone (2-Butanone)	5	U	1.25	5	ug/L
039HP13828	A039GP138	WG	FD	10-Aug-05	SW8260B	MIBK	Methyl isobutyl ketone (4-Methyl-2-pentanone)	5	U	1.25	5	ug/L
039HP13828	A039GP138	WG	FD	10-Aug-05	SW8260B	MTLNCL	Methylene Chloride	5	U	2	5	ug/L
039HP13828	A039GP138	WG	FD	10-Aug-05	SW8260B	PCA	1,1,2,2-Tetrachloroethane	1	U	0.25	1	ug/L
039HP13828	A039GP138	WG	FD	10-Aug-05	SW8260B	PCE	Tetrachloroethylene (PCE)	1	U	0.25	1	ug/L
039HP13828	A039GP138	WG	FD	10-Aug-05	SW8260B	STY	Styrene	1	U	0.25	1	ug/L
039HP13828	A039GP138	WG	FD	10-Aug-05	SW8260B	TBME	Bromoform	1	U	0.25	1	ug/L
039HP13828	A039GP138	WG	FD	10-Aug-05	SW8260B	TCA111	1,1,1-Trichloroethane	1	U	0.3	1	ug/L
039HP13828	A039GP138	WG	FD	10-Aug-05	SW8260B	TCA112	1,1,2-Trichloroethane	1	U	0.25	1	ug/L
039HP13828	A039GP138	WG	FD	10-Aug-05	SW8260B	TCB123	1,2,3-Trichlorobenzene	1	UJ	0.3	1	ug/L
039HP13828	A039GP138	WG	FD	10-Aug-05	SW8260B	TCB124	1,2,4-Trichlorobenzene	1	UJ	0.3	1	ug/L
039HP13828	A039GP138	WG	FD	10-Aug-05	SW8260B	TCE	Trichloroethylene (TCE)	8.7	=	0.25	1	ug/L
039HP13828	A039GP138	WG	FD	10-Aug-05	SW8260B	TCLME	Chloroform	1	U	0.25	1	ug/L
039HP13828	A039GP138	WG	FD	10-Aug-05	SW8260B	VA	Vinyl acetate	5	U	1.5	5	ug/L
039HP13828	A039GP138	WG	FD	10-Aug-05	SW8260B	VC	Vinyl chloride	4.6	=	0.5	1	ug/L
039HP13828	A039GP138	WG	FD	10-Aug-05	SW8260B	XYLENES	Xylenes, Total	1	U	0.25	1	ug/L
039HP13828	A039GP138	WG	FD	10-Aug-05	SW8260B	XYLMP	m+p Xylene	2	U	0.25	2	ug/L
039HP13828	A039GP138	WG	FD	10-Aug-05	SW8260B	XYLO	o-Xylene	1	U	0.25	1	ug/L

BIOBARRIER DPT RESULTS

SampleID	StationID	Matrix	SampleType	DateCollected	Method	ParamID	Paramname	AnaValue	ProjQual	MDL	RL	Units
039GP13912	A039GP139	WG	N	10-Aug-05	SW8260B	ACE	Acetone	31.9	=	1.25	5	ug/L
039GP13912	A039GP139	WG	N	10-Aug-05	SW8260B	BDCME	Bromodichloromethane	0.31	J	0.25	1	ug/L
039GP13912	A039GP139	WG	N	10-Aug-05	SW8260B	BRME	Bromomethane	1	U	0.5	1	ug/L
039GP13912	A039GP139	WG	N	10-Aug-05	SW8260B	BZ	Benzene	1	U	0.3	1	ug/L
039GP13912	A039GP139	WG	N	10-Aug-05	SW8260B	BZME	Toluene	1	U	0.25	1	ug/L
039GP13912	A039GP139	WG	N	10-Aug-05	SW8260B	CDS	Carbon Disulfide	5	U	1.25	5	ug/L
039GP13912	A039GP139	WG	N	10-Aug-05	SW8260B	CEVETH	2-Chloroethyl vinyl ether	5	U	1.5	5	ug/L
039GP13912	A039GP139	WG	N	10-Aug-05	SW8260B	CLBZ	Chlorobenzene	1	U	0.25	1	ug/L
039GP13912	A039GP139	WG	N	10-Aug-05	SW8260B	CLEA	Chloroethane	1	U	0.5	1	ug/L
039GP13912	A039GP139	WG	N	10-Aug-05	SW8260B	CLME	Chloromethane	1	U	0.5	1	ug/L
039GP13912	A039GP139	WG	N	10-Aug-05	SW8260B	CTCL	Carbon Tetrachloride	1	U	0.25	1	ug/L
039GP13912	A039GP139	WG	N	10-Aug-05	SW8260B	DBCME	Dibromochloromethane	1	U	0.25	1	ug/L
039GP13912	A039GP139	WG	N	10-Aug-05	SW8260B	DCA11	1,1-Dichloroethane	1	U	0.3	1	ug/L
039GP13912	A039GP139	WG	N	10-Aug-05	SW8260B	DCA12	1,2-Dichloroethane	0.37	J	0.25	1	ug/L
039GP13912	A039GP139	WG	N	10-Aug-05	SW8260B	DCBZ12	1,2-Dichlorobenzene	1	U	0.25	1	ug/L
039GP13912	A039GP139	WG	N	10-Aug-05	SW8260B	DCBZ13	1,3-Dichlorobenzene	1	U	0.25	1	ug/L
039GP13912	A039GP139	WG	N	10-Aug-05	SW8260B	DCBZ14	1,4-Dichlorobenzene	1	U	0.25	1	ug/L
039GP13912	A039GP139	WG	N	10-Aug-05	SW8260B	DCE11	1,1-Dichloroethene	1	U	0.3	1	ug/L
039GP13912	A039GP139	WG	N	10-Aug-05	SW8260B	DCE12C	cis-1,2-Dichloroethylene	1	U	0.3	1	ug/L
039GP13912	A039GP139	WG	N	10-Aug-05	SW8260B	DCE12T	trans-1,2-Dichloroethene	1	U	0.3	1	ug/L
039GP13912	A039GP139	WG	N	10-Aug-05	SW8260B	DCE12TOT	1,2-Dichloroethene (total)	1	U	0.3	1	ug/L
039GP13912	A039GP139	WG	N	10-Aug-05	SW8260B	DCP13C	cis-1,3-Dichloropropene	1	U	0.25	1	ug/L
039GP13912	A039GP139	WG	N	10-Aug-05	SW8260B	DCP13T	trans-1,3-Dichloropropene	1	U	0.25	1	ug/L
039GP13912	A039GP139	WG	N	10-Aug-05	SW8260B	DCPA12	1,2-Dichloropropane	1	U	0.25	1	ug/L
039GP13912	A039GP139	WG	N	10-Aug-05	SW8260B	EBZ	Ethylbenzene	1	U	0.25	1	ug/L
039GP13912	A039GP139	WG	N	10-Aug-05	SW8260B	HXO2	2-Hexanone	5	U	1.25	5	ug/L
039GP13912	A039GP139	WG	N	10-Aug-05	SW8260B	MEK	Methyl ethyl ketone (2-Butanone)	6.8	=	1.25	5	ug/L
039GP13912	A039GP139	WG	N	10-Aug-05	SW8260B	MIBK	Methyl isobutyl ketone (4-Methyl-2-pentanone)	5	U	1.25	5	ug/L
039GP13912	A039GP139	WG	N	10-Aug-05	SW8260B	MTLNCL	Methylene Chloride	5	U	2	5	ug/L
039GP13912	A039GP139	WG	N	10-Aug-05	SW8260B	PCA	1,1,2,2-Tetrachloroethane	1	U	0.25	1	ug/L
039GP13912	A039GP139	WG	N	10-Aug-05	SW8260B	PCE	Tetrachloroethylene (PCE)	1	U	0.25	1	ug/L
039GP13912	A039GP139	WG	N	10-Aug-05	SW8260B	STY	Styrene	1	U	0.25	1	ug/L
039GP13912	A039GP139	WG	N	10-Aug-05	SW8260B	TBME	Bromoform	1	U	0.25	1	ug/L
039GP13912	A039GP139	WG	N	10-Aug-05	SW8260B	TCA111	1,1,1-Trichloroethane	1	U	0.3	1	ug/L
039GP13912	A039GP139	WG	N	10-Aug-05	SW8260B	TCA112	1,1,2-Trichloroethane	1	U	0.25	1	ug/L

SampleID	StationID	Matrix	SampleType	DateCollected	Method	ParamID	Paramname	AnaValue	ProjQual	MDL	RL	Units
039GP13912	A039GP139	WG	N	10-Aug-05	SW8260B	TCB123	1,2,3-Trichlorobenzene	1	UJ	0.3	1	ug/L
039GP13912	A039GP139	WG	N	10-Aug-05	SW8260B	TCB124	1,2,4-Trichlorobenzene	1	UJ	0.3	1	ug/L
039GP13912	A039GP139	WG	N	10-Aug-05	SW8260B	TCE	Trichloroethylene (TCE)	1	U	0.25	1	ug/L
039GP13912	A039GP139	WG	N	10-Aug-05	SW8260B	TCLME	Chloroform	1.2	=	0.25	1	ug/L
039GP13912	A039GP139	WG	N	10-Aug-05	SW8260B	VA	Vinyl acetate	5	UJ	1.5	5	ug/L
039GP13912	A039GP139	WG	N	10-Aug-05	SW8260B	VC	Vinyl chloride	1	U	0.5	1	ug/L
039GP13912	A039GP139	WG	N	10-Aug-05	SW8260B	XYLENES	Xylenes, Total	1	U	0.25	1	ug/L
039GP13912	A039GP139	WG	N	10-Aug-05	SW8260B	XYLMP	m+p Xylene	2	U	0.25	2	ug/L
039GP13912	A039GP139	WG	N	10-Aug-05	SW8260B	XYLO	o-Xylene	1	U	0.25	1	ug/L
039GP13928	A039GP139	WG	N	10-Aug-05	SW8260B	ACE	Acetone	9.2	=	1.25	5	ug/L
039GP13928	A039GP139	WG	N	10-Aug-05	SW8260B	BDCME	Bromodichloromethane	1	U	0.25	1	ug/L
039GP13928	A039GP139	WG	N	10-Aug-05	SW8260B	BRME	Bromomethane	1	U	0.5	1	ug/L
039GP13928	A039GP139	WG	N	10-Aug-05	SW8260B	BZ	Benzene	0.38	J	0.3	1	ug/L
039GP13928	A039GP139	WG	N	10-Aug-05	SW8260B	BZME	Toluene	1	U	0.25	1	ug/L
039GP13928	A039GP139	WG	N	10-Aug-05	SW8260B	CDS	Carbon Disulfide	5	U	1.25	5	ug/L
039GP13928	A039GP139	WG	N	10-Aug-05	SW8260B	CEVETH	2-Chloroethyl vinyl ether	5	U	1.5	5	ug/L
039GP13928	A039GP139	WG	N	10-Aug-05	SW8260B	CLBZ	Chlorobenzene	1	U	0.25	1	ug/L
039GP13928	A039GP139	WG	N	10-Aug-05	SW8260B	CLEA	Chloroethane	1	U	0.5	1	ug/L
039GP13928	A039GP139	WG	N	10-Aug-05	SW8260B	CLME	Chloromethane	1	U	0.5	1	ug/L
039GP13928	A039GP139	WG	N	10-Aug-05	SW8260B	CTCL	Carbon Tetrachloride	1	U	0.25	1	ug/L
039GP13928	A039GP139	WG	N	10-Aug-05	SW8260B	DBCME	Dibromochloromethane	1	U	0.25	1	ug/L
039GP13928	A039GP139	WG	N	10-Aug-05	SW8260B	DCA11	1,1-Dichloroethane	1	U	0.3	1	ug/L
039GP13928	A039GP139	WG	N	10-Aug-05	SW8260B	DCA12	1,2-Dichloroethane	1	U	0.25	1	ug/L
039GP13928	A039GP139	WG	N	10-Aug-05	SW8260B	DCBZ12	1,2-Dichlorobenzene	1	U	0.25	1	ug/L
039GP13928	A039GP139	WG	N	10-Aug-05	SW8260B	DCBZ13	1,3-Dichlorobenzene	1	U	0.25	1	ug/L
039GP13928	A039GP139	WG	N	10-Aug-05	SW8260B	DCBZ14	1,4-Dichlorobenzene	1	U	0.25	1	ug/L
039GP13928	A039GP139	WG	N	10-Aug-05	SW8260B	DCE11	1,1-Dichloroethene	1	U	0.3	1	ug/L
039GP13928	A039GP139	WG	N	10-Aug-05	SW8260B	DCE12C	cis-1,2-Dichloroethylene	4.5	=	0.3	1	ug/L
039GP13928	A039GP139	WG	N	10-Aug-05	SW8260B	DCE12T	trans-1,2-Dichloroethene	1	U	0.3	1	ug/L
039GP13928	A039GP139	WG	N	10-Aug-05	SW8260B	DCE12TOT	1,2-Dichloroethene (total)	4.5	=	0.3	1	ug/L
039GP13928	A039GP139	WG	N	10-Aug-05	SW8260B	DCP13C	cis-1,3-Dichloropropene	1	U	0.25	1	ug/L
039GP13928	A039GP139	WG	N	10-Aug-05	SW8260B	DCP13T	trans-1,3-Dichloropropene	1	U	0.25	1	ug/L
039GP13928	A039GP139	WG	N	10-Aug-05	SW8260B	DCPA12	1,2-Dichloropropane	1	U	0.25	1	ug/L
039GP13928	A039GP139	WG	N	10-Aug-05	SW8260B	EBZ	Ethylbenzene	1	U	0.25	1	ug/L
039GP13928	A039GP139	WG	N	10-Aug-05	SW8260B	HXO2	2-Hexanone	5	U	1.25	5	ug/L
039GP13928	A039GP139	WG	N	10-Aug-05	SW8260B	MEK	Methyl ethyl ketone (2-Butanone)	2	J	1.25	5	ug/L

SampleID	StationID	Matrix	SampleType	DateCollected	Method	ParamID	Paramname	AnaValue	ProjQual	MDL	RL	Units
039GP13928	A039GP139	WG	N	10-Aug-05	SW8260B	MIBK	Methyl isobutyl ketone (4-Methyl-2-pentanone)	5	U	1.25	5	ug/L
039GP13928	A039GP139	WG	N	10-Aug-05	SW8260B	MTLNCL	Methylene Chloride	5	U	2	5	ug/L
039GP13928	A039GP139	WG	N	10-Aug-05	SW8260B	PCA	1,1,2,2-Tetrachloroethane	1	U	0.25	1	ug/L
039GP13928	A039GP139	WG	N	10-Aug-05	SW8260B	PCE	Tetrachloroethylene (PCE)	1	U	0.25	1	ug/L
039GP13928	A039GP139	WG	N	10-Aug-05	SW8260B	STY	Styrene	1	U	0.25	1	ug/L
039GP13928	A039GP139	WG	N	10-Aug-05	SW8260B	TBME	Bromoform	1	U	0.25	1	ug/L
039GP13928	A039GP139	WG	N	10-Aug-05	SW8260B	TCA111	1,1,1-Trichloroethane	1	U	0.3	1	ug/L
039GP13928	A039GP139	WG	N	10-Aug-05	SW8260B	TCA112	1,1,2-Trichloroethane	1	U	0.25	1	ug/L
039GP13928	A039GP139	WG	N	10-Aug-05	SW8260B	TCB123	1,2,3-Trichlorobenzene	1	UJ	0.3	1	ug/L
039GP13928	A039GP139	WG	N	10-Aug-05	SW8260B	TCB124	1,2,4-Trichlorobenzene	1	UJ	0.3	1	ug/L
039GP13928	A039GP139	WG	N	10-Aug-05	SW8260B	TCE	Trichloroethylene (TCE)	0.81	J	0.25	1	ug/L
039GP13928	A039GP139	WG	N	10-Aug-05	SW8260B	TCLME	Chloroform	1	U	0.25	1	ug/L
039GP13928	A039GP139	WG	N	10-Aug-05	SW8260B	VA	Vinyl acetate	5	UJ	1.5	5	ug/L
039GP13928	A039GP139	WG	N	10-Aug-05	SW8260B	VC	Vinyl chloride	1	=	0.5	1	ug/L
039GP13928	A039GP139	WG	N	10-Aug-05	SW8260B	XYLENES	Xylenes, Total	1	U	0.25	1	ug/L
039GP13928	A039GP139	WG	N	10-Aug-05	SW8260B	XYLMP	m+p Xylene	2	U	0.25	2	ug/L
039GP13928	A039GP139	WG	N	10-Aug-05	SW8260B	XYLO	o-Xylene	1	U	0.25	1	ug/L
039GP13938	A039GP139	WG	N	10-Aug-05	SW8260B	ACE	Acetone	5	=	1.25	5	ug/L
039GP13938	A039GP139	WG	N	10-Aug-05	SW8260B	BDCME	Bromodichloromethane	1	U	0.25	1	ug/L
039GP13938	A039GP139	WG	N	10-Aug-05	SW8260B	BRME	Bromomethane	1	U	0.5	1	ug/L
039GP13938	A039GP139	WG	N	10-Aug-05	SW8260B	BZ	Benzene	0.47	J	0.3	1	ug/L
039GP13938	A039GP139	WG	N	10-Aug-05	SW8260B	BZME	Toluene	1	U	0.25	1	ug/L
039GP13938	A039GP139	WG	N	10-Aug-05	SW8260B	CDS	Carbon Disulfide	5	U	1.25	5	ug/L
039GP13938	A039GP139	WG	N	10-Aug-05	SW8260B	CEVETH	2-Chloroethyl vinyl ether	5	U	1.5	5	ug/L
039GP13938	A039GP139	WG	N	10-Aug-05	SW8260B	CLBZ	Chlorobenzene	1	U	0.25	1	ug/L
039GP13938	A039GP139	WG	N	10-Aug-05	SW8260B	CLEA	Chloroethane	1	U	0.5	1	ug/L
039GP13938	A039GP139	WG	N	10-Aug-05	SW8260B	CLME	Chloromethane	1	U	0.5	1	ug/L
039GP13938	A039GP139	WG	N	10-Aug-05	SW8260B	CTCL	Carbon Tetrachloride	1	U	0.25	1	ug/L
039GP13938	A039GP139	WG	N	10-Aug-05	SW8260B	DBCME	Dibromochloromethane	1	U	0.25	1	ug/L
039GP13938	A039GP139	WG	N	10-Aug-05	SW8260B	DCA11	1,1-Dichloroethane	1	U	0.3	1	ug/L
039GP13938	A039GP139	WG	N	10-Aug-05	SW8260B	DCA12	1,2-Dichloroethane	0.27	J	0.25	1	ug/L
039GP13938	A039GP139	WG	N	10-Aug-05	SW8260B	DCBZ12	1,2-Dichlorobenzene	1	U	0.25	1	ug/L
039GP13938	A039GP139	WG	N	10-Aug-05	SW8260B	DCBZ13	1,3-Dichlorobenzene	1	U	0.25	1	ug/L
039GP13938	A039GP139	WG	N	10-Aug-05	SW8260B	DCBZ14	1,4-Dichlorobenzene	1	U	0.25	1	ug/L
039GP13938	A039GP139	WG	N	10-Aug-05	SW8260B	DCE11	1,1-Dichloroethene	1	U	0.3	1	ug/L
039GP13938	A039GP139	WG	N	10-Aug-05	SW8260B	DCE12C	cis-1,2-Dichloroethylene	2.6	=	0.3	1	ug/L

BIOBARRIER L. T RESULTS

SampleID	StationID	Matrix	SampleType	DateCollected	Method	ParamID	Paramname	AnaValue	ProjQual	MDL	RL	Units
039GP13938	A039GP139	WG	N	10-Aug-05	SW8260B	DCE12T	trans-1,2-Dichloroethene	1	U	0.3	1	ug/L
039GP13938	A039GP139	WG	N	10-Aug-05	SW8260B	DCE12TOT	1,2-Dichloroethene (total)	2.6	=	0.3	1	ug/L
039GP13938	A039GP139	WG	N	10-Aug-05	SW8260B	DCP13C	cis-1,3-Dichloropropene	1	U	0.25	1	ug/L
039GP13938	A039GP139	WG	N	10-Aug-05	SW8260B	DCP13T	trans-1,3-Dichloropropene	1	U	0.25	1	ug/L
039GP13938	A039GP139	WG	N	10-Aug-05	SW8260B	DCPA12	1,2-Dichloropropane	1	U	0.25	1	ug/L
039GP13938	A039GP139	WG	N	10-Aug-05	SW8260B	EBZ	Ethylbenzene	1	U	0.25	1	ug/L
039GP13938	A039GP139	WG	N	10-Aug-05	SW8260B	HXO2	2-Hexanone	5	U	1.25	5	ug/L
039GP13938	A039GP139	WG	N	10-Aug-05	SW8260B	MEK	Methyl ethyl ketone (2-Butanone)	5	U	1.25	5	ug/L
039GP13938	A039GP139	WG	N	10-Aug-05	SW8260B	MIBK	Methyl isobutyl ketone (4-Methyl-2-pentanone)	5	U	1.25	5	ug/L
039GP13938	A039GP139	WG	N	10-Aug-05	SW8260B	MTLNCL	Methylene Chloride	5	U	2	5	ug/L
039GP13938	A039GP139	WG	N	10-Aug-05	SW8260B	PCA	1,1,2,2-Tetrachloroethane	1	U	0.25	1	ug/L
039GP13938	A039GP139	WG	N	10-Aug-05	SW8260B	PCE	Tetrachloroethylene (PCE)	1	U	0.25	1	ug/L
039GP13938	A039GP139	WG	N	10-Aug-05	SW8260B	STY	Styrene	1	U	0.25	1	ug/L
039GP13938	A039GP139	WG	N	10-Aug-05	SW8260B	TBME	Bromoform	1	U	0.25	1	ug/L
039GP13938	A039GP139	WG	N	10-Aug-05	SW8260B	TCA111	1,1,1-Trichloroethane	1	U	0.3	1	ug/L
039GP13938	A039GP139	WG	N	10-Aug-05	SW8260B	TCA112	1,1,2-Trichloroethane	1	U	0.25	1	ug/L
039GP13938	A039GP139	WG	N	10-Aug-05	SW8260B	TCB123	1,2,3-Trichlorobenzene	1	UJ	0.3	1	ug/L
039GP13938	A039GP139	WG	N	10-Aug-05	SW8260B	TCB124	1,2,4-Trichlorobenzene	1	UJ	0.3	1	ug/L
039GP13938	A039GP139	WG	N	10-Aug-05	SW8260B	TCE	Trichloroethylene (TCE)	1.1	=	0.25	1	ug/L
039GP13938	A039GP139	WG	N	10-Aug-05	SW8260B	TCLME	Chloroform	1	U	0.25	1	ug/L
039GP13938	A039GP139	WG	N	10-Aug-05	SW8260B	VA	Vinyl acetate	5	UJ	1.5	5	ug/L
039GP13938	A039GP139	WG	N	10-Aug-05	SW8260B	VC	Vinyl chloride	0.64	J	0.5	1	ug/L
039GP13938	A039GP139	WG	N	10-Aug-05	SW8260B	XYLENES	Xylenes, Total	1	U	0.25	1	ug/L
039GP13938	A039GP139	WG	N	10-Aug-05	SW8260B	XYLMP	m+p Xylene	2	U	0.25	2	ug/L
039GP13938	A039GP139	WG	N	10-Aug-05	SW8260B	XYLO	o-Xylene	1	U	0.25	1	ug/L

BIOBARRIER DPT RESULTS

SampleID	StationID	Matrix	SampleType	DateCollected	Method	ParamID	Paramname	AnaValue	ProjQual	MDL	RL	Units
039GP14012	A039GP140	WG	N	10-Aug-05	SW8260B	ACE	Acetone	7.7	=	1.25	5	ug/L
039GP14012	A039GP140	WG	N	10-Aug-05	SW8260B	BDCME	Bromodichloromethane	1	U	0.25	1	ug/L
039GP14012	A039GP140	WG	N	10-Aug-05	SW8260B	BRME	Bromomethane	1	U	0.5	1	ug/L
039GP14012	A039GP140	WG	N	10-Aug-05	SW8260B	BZ	Benzene	1	U	0.3	1	ug/L
039GP14012	A039GP140	WG	N	10-Aug-05	SW8260B	BZME	Toluene	1	U	0.25	1	ug/L
039GP14012	A039GP140	WG	N	10-Aug-05	SW8260B	CDS	Carbon Disulfide	9.5	=	1.25	5	ug/L
039GP14012	A039GP140	WG	N	10-Aug-05	SW8260B	CEVETH	2-Chloroethyl vinyl ether	5	U	1.5	5	ug/L
039GP14012	A039GP140	WG	N	10-Aug-05	SW8260B	CLBZ	Chlorobenzene	1	U	0.25	1	ug/L
039GP14012	A039GP140	WG	N	10-Aug-05	SW8260B	CLEA	Chloroethane	1	U	0.5	1	ug/L
039GP14012	A039GP140	WG	N	10-Aug-05	SW8260B	CLME	Chloromethane	1	U	0.5	1	ug/L
039GP14012	A039GP140	WG	N	10-Aug-05	SW8260B	CTCL	Carbon Tetrachloride	1	U	0.25	1	ug/L
039GP14012	A039GP140	WG	N	10-Aug-05	SW8260B	DBCME	Dibromochloromethane	1	U	0.25	1	ug/L
039GP14012	A039GP140	WG	N	10-Aug-05	SW8260B	DCA11	1,1-Dichloroethane	1	U	0.3	1	ug/L
039GP14012	A039GP140	WG	N	10-Aug-05	SW8260B	DCA12	1,2-Dichloroethane	0.32	J	0.25	1	ug/L
039GP14012	A039GP140	WG	N	10-Aug-05	SW8260B	DCBZ12	1,2-Dichlorobenzene	1	U	0.25	1	ug/L
039GP14012	A039GP140	WG	N	10-Aug-05	SW8260B	DCBZ13	1,3-Dichlorobenzene	1	U	0.25	1	ug/L
039GP14012	A039GP140	WG	N	10-Aug-05	SW8260B	DCBZ14	1,4-Dichlorobenzene	1	U	0.25	1	ug/L
039GP14012	A039GP140	WG	N	10-Aug-05	SW8260B	DCE11	1,1-Dichloroethene	1	U	0.3	1	ug/L
039GP14012	A039GP140	WG	N	10-Aug-05	SW8260B	DCE12C	cis-1,2-Dichloroethylene	1	U	0.3	1	ug/L
039GP14012	A039GP140	WG	N	10-Aug-05	SW8260B	DCE12T	trans-1,2-Dichloroethene	1	U	0.3	1	ug/L
039GP14012	A039GP140	WG	N	10-Aug-05	SW8260B	DCE12TOT	1,2-Dichloroethene (total)	1	U	0.3	1	ug/L
039GP14012	A039GP140	WG	N	10-Aug-05	SW8260B	DCP13C	cis-1,3-Dichloropropene	1	U	0.25	1	ug/L
039GP14012	A039GP140	WG	N	10-Aug-05	SW8260B	DCP13T	trans-1,3-Dichloropropene	1	U	0.25	1	ug/L
039GP14012	A039GP140	WG	N	10-Aug-05	SW8260B	DCPA12	1,2-Dichloropropane	1	U	0.25	1	ug/L
039GP14012	A039GP140	WG	N	10-Aug-05	SW8260B	EBZ	Ethylbenzene	1	U	0.25	1	ug/L
039GP14012	A039GP140	WG	N	10-Aug-05	SW8260B	HXO2	2-Hexanone	5	U	1.25	5	ug/L
039GP14012	A039GP140	WG	N	10-Aug-05	SW8260B	MEK	Methyl ethyl ketone (2-Butanone)	5	U	1.25	5	ug/L
039GP14012	A039GP140	WG	N	10-Aug-05	SW8260B	MIBK	Methyl isobutyl ketone (4-Methyl-2-pentanone)	5	U	1.25	5	ug/L
039GP14012	A039GP140	WG	N	10-Aug-05	SW8260B	MTLNCL	Methylene Chloride	5	U	2	5	ug/L
039GP14012	A039GP140	WG	N	10-Aug-05	SW8260B	PCA	1,1,2,2-Tetrachloroethane	1	U	0.25	1	ug/L
039GP14012	A039GP140	WG	N	10-Aug-05	SW8260B	PCE	Tetrachloroethylene (PCE)	1	U	0.25	1	ug/L
039GP14012	A039GP140	WG	N	10-Aug-05	SW8260B	STY	Styrene	1	U	0.25	1	ug/L
039GP14012	A039GP140	WG	N	10-Aug-05	SW8260B	TBME	Bromoform	1	U	0.25	1	ug/L
039GP14012	A039GP140	WG	N	10-Aug-05	SW8260B	TCA111	1,1,1-Trichloroethane	1	U	0.3	1	ug/L
039GP14012	A039GP140	WG	N	10-Aug-05	SW8260B	TCA112	1,1,2-Trichloroethane	1	U	0.25	1	ug/L
039GP14012	A039GP140	WG	N	10-Aug-05	SW8260B	TCB123	1,2,3-Trichlorobenzene	1	UJ	0.3	1	ug/L

SampleID	StationID	Matrix	SampleType	DateCollected	Method	ParamID	Paramname	AnaValue	ProjQual	MDL	RL	Units
039GP14012	A039GP140	WG	N	10-Aug-05	SW8260B	TCB124	1,2,4-Trichlorobenzene	1	UJ	0.3	1	ug/L
039GP14012	A039GP140	WG	N	10-Aug-05	SW8260B	TCE	Trichloroethylene (TCE)	1	U	0.25	1	ug/L
039GP14012	A039GP140	WG	N	10-Aug-05	SW8260B	TCLME	Chloroform	0.61	J	0.25	1	ug/L
039GP14012	A039GP140	WG	N	10-Aug-05	SW8260B	VA	Vinyl acetate	5	UJ	1.5	5	ug/L
039GP14012	A039GP140	WG	N	10-Aug-05	SW8260B	VC	Vinyl chloride	1	U	0.5	1	ug/L
039GP14012	A039GP140	WG	N	10-Aug-05	SW8260B	XYLENES	Xylenes, Total	1	U	0.25	1	ug/L
039GP14012	A039GP140	WG	N	10-Aug-05	SW8260B	XYLMP	m+p Xylene	2	U	0.25	2	ug/L
039GP14012	A039GP140	WG	N	10-Aug-05	SW8260B	XYLO	o-Xylene	1	U	0.25	1	ug/L
039GP14028	A039GP140	WG	N	10-Aug-05	SW8260B	ACE	Acetone	2.7	J	1.25	5	ug/L
039GP14028	A039GP140	WG	N	10-Aug-05	SW8260B	BDCME	Bromodichloromethane	1	U	0.25	1	ug/L
039GP14028	A039GP140	WG	N	10-Aug-05	SW8260B	BRME	Bromomethane	1	U	0.5	1	ug/L
039GP14028	A039GP140	WG	N	10-Aug-05	SW8260B	BZ	Benzene	0.52	J	0.3	1	ug/L
039GP14028	A039GP140	WG	N	10-Aug-05	SW8260B	BZME	Toluene	1	U	0.25	1	ug/L
039GP14028	A039GP140	WG	N	10-Aug-05	SW8260B	CDS	Carbon Disulfide	5	U	1.25	5	ug/L
039GP14028	A039GP140	WG	N	10-Aug-05	SW8260B	CEVETH	2-Chloroethyl vinyl ether	5	U	1.5	5	ug/L
039GP14028	A039GP140	WG	N	10-Aug-05	SW8260B	CLBZ	Chlorobenzene	1	U	0.25	1	ug/L
039GP14028	A039GP140	WG	N	10-Aug-05	SW8260B	CLEA	Chloroethane	1	U	0.5	1	ug/L
039GP14028	A039GP140	WG	N	10-Aug-05	SW8260B	CLME	Chloromethane	1	U	0.5	1	ug/L
039GP14028	A039GP140	WG	N	10-Aug-05	SW8260B	CTCL	Carbon Tetrachloride	1	U	0.25	1	ug/L
039GP14028	A039GP140	WG	N	10-Aug-05	SW8260B	DBCME	Dibromochloromethane	1	U	0.25	1	ug/L
039GP14028	A039GP140	WG	N	10-Aug-05	SW8260B	DCA11	1,1-Dichloroethane	1.5	=	0.3	1	ug/L
039GP14028	A039GP140	WG	N	10-Aug-05	SW8260B	DCA12	1,2-Dichloroethane	1	U	0.25	1	ug/L
039GP14028	A039GP140	WG	N	10-Aug-05	SW8260B	DCBZ12	1,2-Dichlorobenzene	1	U	0.25	1	ug/L
039GP14028	A039GP140	WG	N	10-Aug-05	SW8260B	DCBZ13	1,3-Dichlorobenzene	1	U	0.25	1	ug/L
039GP14028	A039GP140	WG	N	10-Aug-05	SW8260B	DCBZ14	1,4-Dichlorobenzene	1	U	0.25	1	ug/L
039GP14028	A039GP140	WG	N	10-Aug-05	SW8260B	DCE11	1,1-Dichloroethene	1	U	0.3	1	ug/L
039GP14028	A039GP140	WG	N	10-Aug-05	SW8260B	DCE12C	cis-1,2-Dichloroethylene	32.4	=	0.3	1	ug/L
039GP14028	A039GP140	WG	N	10-Aug-05	SW8260B	DCE12T	trans-1,2-Dichloroethene	1	U	0.3	1	ug/L
039GP14028	A039GP140	WG	N	10-Aug-05	SW8260B	DCE12TOT	1,2-Dichloroethene (total)	32.4	=	0.3	1	ug/L
039GP14028	A039GP140	WG	N	10-Aug-05	SW8260B	DCP13C	cis-1,3-Dichloropropene	1	U	0.25	1	ug/L
039GP14028	A039GP140	WG	N	10-Aug-05	SW8260B	DCP13T	trans-1,3-Dichloropropene	1	U	0.25	1	ug/L
039GP14028	A039GP140	WG	N	10-Aug-05	SW8260B	DCPA12	1,2-Dichloropropane	1	U	0.25	1	ug/L
039GP14028	A039GP140	WG	N	10-Aug-05	SW8260B	EBZ	Ethylbenzene	1	U	0.25	1	ug/L
039GP14028	A039GP140	WG	N	10-Aug-05	SW8260B	HXO2	2-Hexanone	5	U	1.25	5	ug/L
039GP14028	A039GP140	WG	N	10-Aug-05	SW8260B	MEK	Methyl ethyl ketone (2-Butanone)	5	U	1.25	5	ug/L
039GP14028	A039GP140	WG	N	10-Aug-05	SW8260B	MIBK	Methyl isobutyl ketone (4-Methyl-2-pentanone)	5	U	1.25	5	ug/L

BIOBARRIER DPT RESULTS

SampleID	StationID	Matrix	SampleType	DateCollected	Method	ParamID	Paramname	AnaValue	ProjQual	MDL	RL	Units
039GP14028	A039GP140	WG	N	10-Aug-05	SW8260B	MTLNCL	Methylene Chloride	5	U	2	5	ug/L
039GP14028	A039GP140	WG	N	10-Aug-05	SW8260B	PCA	1,1,2,2-Tetrachloroethane	1	U	0.25	1	ug/L
039GP14028	A039GP140	WG	N	10-Aug-05	SW8260B	PCE	Tetrachloroethylene (PCE)	4.7	=	0.25	1	ug/L
039GP14028	A039GP140	WG	N	10-Aug-05	SW8260B	STY	Styrene	1	U	0.25	1	ug/L
039GP14028	A039GP140	WG	N	10-Aug-05	SW8260B	TBME	Bromoform	1	U	0.25	1	ug/L
039GP14028	A039GP140	WG	N	10-Aug-05	SW8260B	TCA111	1,1,1-Trichloroethane	1	U	0.3	1	ug/L
039GP14028	A039GP140	WG	N	10-Aug-05	SW8260B	TCA112	1,1,2-Trichloroethane	1	U	0.25	1	ug/L
039GP14028	A039GP140	WG	N	10-Aug-05	SW8260B	TCB123	1,2,3-Trichlorobenzene	1	UJ	0.3	1	ug/L
039GP14028	A039GP140	WG	N	10-Aug-05	SW8260B	TCB124	1,2,4-Trichlorobenzene	1	UJ	0.3	1	ug/L
039GP14028	A039GP140	WG	N	10-Aug-05	SW8260B	TCE	Trichloroethylene (TCE)	4.8	=	0.25	1	ug/L
039GP14028	A039GP140	WG	N	10-Aug-05	SW8260B	TCLME	Chloroform	1	U	0.25	1	ug/L
039GP14028	A039GP140	WG	N	10-Aug-05	SW8260B	VA	Vinyl acetate	5	U	1.5	5	ug/L
039GP14028	A039GP140	WG	N	10-Aug-05	SW8260B	VC	Vinyl chloride	5.5	=	0.5	1	ug/L
039GP14028	A039GP140	WG	N	10-Aug-05	SW8260B	XYLENES	Xylenes, Total	1	U	0.25	1	ug/L
039GP14028	A039GP140	WG	N	10-Aug-05	SW8260B	XYLMP	m+p Xylene	2	U	0.25	2	ug/L
039GP14028	A039GP140	WG	N	10-Aug-05	SW8260B	XYLO	o-Xylene	1	U	0.25	1	ug/L
039GP14038	A039GP140	WG	N	10-Aug-05	SW8260B	ACE	Acetone	10.2	=	1.25	5	ug/L
039GP14038	A039GP140	WG	N	10-Aug-05	SW8260B	BDCME	Bromodichloromethane	1	U	0.25	1	ug/L
039GP14038	A039GP140	WG	N	10-Aug-05	SW8260B	BRME	Bromomethane	1	U	0.5	1	ug/L
039GP14038	A039GP140	WG	N	10-Aug-05	SW8260B	BZ	Benzene	0.96	J	0.3	1	ug/L
039GP14038	A039GP140	WG	N	10-Aug-05	SW8260B	BZME	Toluene	1	U	0.25	1	ug/L
039GP14038	A039GP140	WG	N	10-Aug-05	SW8260B	CDS	Carbon Disulfide	5	U	1.25	5	ug/L
039GP14038	A039GP140	WG	N	10-Aug-05	SW8260B	CEVETH	2-Chloroethyl vinyl ether	5	U	1.5	5	ug/L
039GP14038	A039GP140	WG	N	10-Aug-05	SW8260B	CLBZ	Chlorobenzene	1	U	0.25	1	ug/L
039GP14038	A039GP140	WG	N	10-Aug-05	SW8260B	CLEA	Chloroethane	1	U	0.5	1	ug/L
039GP14038	A039GP140	WG	N	10-Aug-05	SW8260B	CLME	Chloromethane	1	U	0.5	1	ug/L
039GP14038	A039GP140	WG	N	10-Aug-05	SW8260B	CTCL	Carbon Tetrachloride	1	U	0.25	1	ug/L
039GP14038	A039GP140	WG	N	10-Aug-05	SW8260B	DBCME	Dibromochloromethane	1	U	0.25	1	ug/L
039GP14038	A039GP140	WG	N	10-Aug-05	SW8260B	DCA11	1,1-Dichloroethane	1	U	0.3	1	ug/L
039GP14038	A039GP140	WG	N	10-Aug-05	SW8260B	DCA12	1,2-Dichloroethane	1	U	0.25	1	ug/L
039GP14038	A039GP140	WG	N	10-Aug-05	SW8260B	DCBZ12	1,2-Dichlorobenzene	1	U	0.25	1	ug/L
039GP14038	A039GP140	WG	N	10-Aug-05	SW8260B	DCBZ13	1,3-Dichlorobenzene	1	U	0.25	1	ug/L
039GP14038	A039GP140	WG	N	10-Aug-05	SW8260B	DCBZ14	1,4-Dichlorobenzene	1	U	0.25	1	ug/L
039GP14038	A039GP140	WG	N	10-Aug-05	SW8260B	DCE11	1,1-Dichloroethene	1	U	0.3	1	ug/L
039GP14038	A039GP140	WG	N	10-Aug-05	SW8260B	DCE12C	cis-1,2-Dichloroethylene	1.6	=	0.3	1	ug/L
039GP14038	A039GP140	WG	N	10-Aug-05	SW8260B	DCE12T	trans-1,2-Dichloroethene	1	U	0.3	1	ug/L

BIOBARRIER _ _ T RESULTS

SampleID	StationID	Matrix	SampleType	DateCollected	Method	ParamID	Paramname	AnaValue	ProjQual	MDL	RL	Units
039GP14038	A039GP140	WG	N	10-Aug-05	SW8260B	DCE12TOT	1,2-Dichloroethene (total)	1.6 =		0.3	1	ug/L
039GP14038	A039GP140	WG	N	10-Aug-05	SW8260B	DCP13C	cis-1,3-Dichloropropene	1 U		0.25	1	ug/L
039GP14038	A039GP140	WG	N	10-Aug-05	SW8260B	DCP13T	trans-1,3-Dichloropropene	1 U		0.25	1	ug/L
039GP14038	A039GP140	WG	N	10-Aug-05	SW8260B	DCPA12	1,2-Dichloropropane	1 U		0.25	1	ug/L
039GP14038	A039GP140	WG	N	10-Aug-05	SW8260B	EBZ	Ethylbenzene	1 U		0.25	1	ug/L
039GP14038	A039GP140	WG	N	10-Aug-05	SW8260B	HXO2	2-Hexanone	5 U		1.25	5	ug/L
039GP14038	A039GP140	WG	N	10-Aug-05	SW8260B	MEK	Methyl ethyl ketone (2-Butanone)	2.5 J		1.25	5	ug/L
039GP14038	A039GP140	WG	N	10-Aug-05	SW8260B	MIBK	Methyl isobutyl ketone (4-Methyl-2-pentanone)	5 U		1.25	5	ug/L
039GP14038	A039GP140	WG	N	10-Aug-05	SW8260B	MTLNCL	Methylene Chloride	5 U		2	5	ug/L
039GP14038	A039GP140	WG	N	10-Aug-05	SW8260B	PCA	1,1,2,2-Tetrachloroethane	1 U		0.25	1	ug/L
039GP14038	A039GP140	WG	N	10-Aug-05	SW8260B	PCE	Tetrachloroethylene (PCE)	1 U		0.25	1	ug/L
039GP14038	A039GP140	WG	N	10-Aug-05	SW8260B	STY	Styrene	1 U		0.25	1	ug/L
039GP14038	A039GP140	WG	N	10-Aug-05	SW8260B	TBME	Bromoform	1 U		0.25	1	ug/L
039GP14038	A039GP140	WG	N	10-Aug-05	SW8260B	TCA111	1,1,1-Trichloroethane	1 U		0.3	1	ug/L
039GP14038	A039GP140	WG	N	10-Aug-05	SW8260B	TCA112	1,1,2-Trichloroethane	1 U		0.25	1	ug/L
039GP14038	A039GP140	WG	N	10-Aug-05	SW8260B	TCB123	1,2,3-Trichlorobenzene	1 UJ		0.3	1	ug/L
039GP14038	A039GP140	WG	N	10-Aug-05	SW8260B	TCB124	1,2,4-Trichlorobenzene	1 UJ		0.3	1	ug/L
039GP14038	A039GP140	WG	N	10-Aug-05	SW8260B	TCE	Trichloroethylene (TCE)	1 U		0.25	1	ug/L
039GP14038	A039GP140	WG	N	10-Aug-05	SW8260B	TCLME	Chloroform	1 U		0.25	1	ug/L
039GP14038	A039GP140	WG	N	10-Aug-05	SW8260B	VA	Vinyl acetate	5 UJ		1.5	5	ug/L
039GP14038	A039GP140	WG	N	10-Aug-05	SW8260B	VC	Vinyl chloride	1 U		0.5	1	ug/L
039GP14038	A039GP140	WG	N	10-Aug-05	SW8260B	XYLENES	Xylenes, Total	1 U		0.25	1	ug/L
039GP14038	A039GP140	WG	N	10-Aug-05	SW8260B	XYLMP	m+p Xylene	2 U		0.25	2	ug/L
039GP14038	A039GP140	WG	N	10-Aug-05	SW8260B	XYLO	o-Xylene	1 U		0.25	1	ug/L

BIOBARRIER DPT RESULTS

SampleID	StationID	Matrix	SampleType	DateCollected	Method	ParamID	Paramname	AnaValue	ProjQual	MDL	RL	Units
039GP14128	A039GP141	WG	N	10-Aug-05	SW8260B	ACE	Acetone	7.8	J	1.25	5	ug/L
039GP14128	A039GP141	WG	N	10-Aug-05	SW8260B	BDCME	Bromodichloromethane	1	U	0.25	1	ug/L
039GP14128	A039GP141	WG	N	10-Aug-05	SW8260B	BRME	Bromomethane	1	U	0.5	1	ug/L
039GP14128	A039GP141	WG	N	10-Aug-05	SW8260B	BZ	Benzene	1	U	0.3	1	ug/L
039GP14128	A039GP141	WG	N	10-Aug-05	SW8260B	BZME	Toluene	1	U	0.25	1	ug/L
039GP14128	A039GP141	WG	N	10-Aug-05	SW8260B	CDS	Carbon Disulfide	5	UJ	1.25	5	ug/L
039GP14128	A039GP141	WG	N	10-Aug-05	SW8260B	CEVETH	2-Chloroethyl vinyl ether	5	U	1.5	5	ug/L
039GP14128	A039GP141	WG	N	10-Aug-05	SW8260B	CLBZ	Chlorobenzene	1	U	0.25	1	ug/L
039GP14128	A039GP141	WG	N	10-Aug-05	SW8260B	CLEA	Chloroethane	1	U	0.5	1	ug/L
039GP14128	A039GP141	WG	N	10-Aug-05	SW8260B	CLME	Chloromethane	1	U	0.5	1	ug/L
039GP14128	A039GP141	WG	N	10-Aug-05	SW8260B	CTCL	Carbon Tetrachloride	1	UJ	0.25	1	ug/L
039GP14128	A039GP141	WG	N	10-Aug-05	SW8260B	DBCME	Dibromochloromethane	1	U	0.25	1	ug/L
039GP14128	A039GP141	WG	N	10-Aug-05	SW8260B	DCA11	1,1-Dichloroethane	0.73	J	0.3	1	ug/L
039GP14128	A039GP141	WG	N	10-Aug-05	SW8260B	DCA12	1,2-Dichloroethane	1	U	0.25	1	ug/L
039GP14128	A039GP141	WG	N	10-Aug-05	SW8260B	DCBZ12	1,2-Dichlorobenzene	1	U	0.25	1	ug/L
039GP14128	A039GP141	WG	N	10-Aug-05	SW8260B	DCBZ13	1,3-Dichlorobenzene	1	U	0.25	1	ug/L
039GP14128	A039GP141	WG	N	10-Aug-05	SW8260B	DCBZ14	1,4-Dichlorobenzene	1	U	0.25	1	ug/L
039GP14128	A039GP141	WG	N	10-Aug-05	SW8260B	DCE11	1,1-Dichloroethene	1	U	0.3	1	ug/L
039GP14128	A039GP141	WG	N	10-Aug-05	SW8260B	DCE12C	cis-1,2-Dichloroethylene	15.8	=	0.3	1	ug/L
039GP14128	A039GP141	WG	N	10-Aug-05	SW8260B	DCE12T	trans-1,2-Dichloroethene	1	U	0.3	1	ug/L
039GP14128	A039GP141	WG	N	10-Aug-05	SW8260B	DCE12TOT	1,2-Dichloroethene (total)	15.8	=	0.3	1	ug/L
039GP14128	A039GP141	WG	N	10-Aug-05	SW8260B	DCP13C	cis-1,3-Dichloropropene	1	U	0.25	1	ug/L
039GP14128	A039GP141	WG	N	10-Aug-05	SW8260B	DCP13T	trans-1,3-Dichloropropene	1	U	0.25	1	ug/L
039GP14128	A039GP141	WG	N	10-Aug-05	SW8260B	DCPA12	1,2-Dichloropropane	1	U	0.25	1	ug/L
039GP14128	A039GP141	WG	N	10-Aug-05	SW8260B	EBZ	Ethylbenzene	1	U	0.25	1	ug/L
039GP14128	A039GP141	WG	N	10-Aug-05	SW8260B	HXO2	2-Hexanone	5	U	1.25	5	ug/L
039GP14128	A039GP141	WG	N	10-Aug-05	SW8260B	MEK	Methyl ethyl ketone (2-Butanone)	5	U	1.25	5	ug/L
039GP14128	A039GP141	WG	N	10-Aug-05	SW8260B	MIBK	Methyl isobutyl ketone (4-Methyl-2-pentanone)	5	U	1.25	5	ug/L
039GP14128	A039GP141	WG	N	10-Aug-05	SW8260B	MTLNCL	Methylene Chloride	5	U	2	5	ug/L
039GP14128	A039GP141	WG	N	10-Aug-05	SW8260B	PCA	1,1,2,2-Tetrachloroethane	1	U	0.25	1	ug/L
039GP14128	A039GP141	WG	N	10-Aug-05	SW8260B	PCE	Tetrachloroethylene (PCE)	1	U	0.25	1	ug/L
039GP14128	A039GP141	WG	N	10-Aug-05	SW8260B	STY	Styrene	1	U	0.25	1	ug/L
039GP14128	A039GP141	WG	N	10-Aug-05	SW8260B	TBME	Bromoform	1	U	0.25	1	ug/L
039GP14128	A039GP141	WG	N	10-Aug-05	SW8260B	TCA111	1,1,1-Trichloroethane	1	U	0.3	1	ug/L
039GP14128	A039GP141	WG	N	10-Aug-05	SW8260B	TCA112	1,1,2-Trichloroethane	1	U	0.25	1	ug/L

SampleID	StationID	Matrix	SampleType	DateCollected	Method	ParamID	Paramname	AnaValue	ProjQual	MDL	RL	Units
039GP14128	A039GP141	WG	N	10-Aug-05	SW8260B	TCB123	1,2,3-Trichlorobenzene	1	U	0.3	1	ug/L
039GP14128	A039GP141	WG	N	10-Aug-05	SW8260B	TCB124	1,2,4-Trichlorobenzene	1	U	0.3	1	ug/L
039GP14128	A039GP141	WG	N	10-Aug-05	SW8260B	TCE	Trichloroethylene (TCE)	0.32	J	0.25	1	ug/L
039GP14128	A039GP141	WG	N	10-Aug-05	SW8260B	TCLME	Chloroform	1	U	0.25	1	ug/L
039GP14128	A039GP141	WG	N	10-Aug-05	SW8260B	VA	Vinyl acetate	5	U	1.5	5	ug/L
039GP14128	A039GP141	WG	N	10-Aug-05	SW8260B	VC	Vinyl chloride	2.5	=	0.5	1	ug/L
039GP14128	A039GP141	WG	N	10-Aug-05	SW8260B	XYLENES	Xylenes, Total	1	U	0.25	1	ug/L
039GP14128	A039GP141	WG	N	10-Aug-05	SW8260B	XYLMP	m+p Xylene	2	U	0.25	2	ug/L
039GP14128	A039GP141	WG	N	10-Aug-05	SW8260B	XYLO	o-Xylene	1	U	0.25	1	ug/L
039GP14138	A039GP141	WG	N	10-Aug-05	SW8260B	ACE	Acetone	5.4	J	1.25	5	ug/L
039GP14138	A039GP141	WG	N	10-Aug-05	SW8260B	BDCME	Bromodichloromethane	1	U	0.25	1	ug/L
039GP14138	A039GP141	WG	N	10-Aug-05	SW8260B	BRME	Bromomethane	1	U	0.5	1	ug/L
039GP14138	A039GP141	WG	N	10-Aug-05	SW8260B	BZ	Benzene	1	U	0.3	1	ug/L
039GP14138	A039GP141	WG	N	10-Aug-05	SW8260B	BZME	Toluene	1	U	0.25	1	ug/L
039GP14138	A039GP141	WG	N	10-Aug-05	SW8260B	CDS	Carbon Disulfide	5	UJ	1.25	5	ug/L
039GP14138	A039GP141	WG	N	10-Aug-05	SW8260B	CEVETH	2-Chloroethyl vinyl ether	5	U	1.5	5	ug/L
039GP14138	A039GP141	WG	N	10-Aug-05	SW8260B	CLBZ	Chlorobenzene	1	U	0.25	1	ug/L
039GP14138	A039GP141	WG	N	10-Aug-05	SW8260B	CLEA	Chloroethane	1	U	0.5	1	ug/L
039GP14138	A039GP141	WG	N	10-Aug-05	SW8260B	CLME	Chloromethane	1	U	0.5	1	ug/L
039GP14138	A039GP141	WG	N	10-Aug-05	SW8260B	CTCL	Carbon Tetrachloride	1	UJ	0.25	1	ug/L
039GP14138	A039GP141	WG	N	10-Aug-05	SW8260B	DBCME	Dibromochloromethane	1	U	0.25	1	ug/L
039GP14138	A039GP141	WG	N	10-Aug-05	SW8260B	DCA11	1,1-Dichloroethane	1	U	0.3	1	ug/L
039GP14138	A039GP141	WG	N	10-Aug-05	SW8260B	DCA12	1,2-Dichloroethane	1	U	0.25	1	ug/L
039GP14138	A039GP141	WG	N	10-Aug-05	SW8260B	DCBZ12	1,2-Dichlorobenzene	1	U	0.25	1	ug/L
039GP14138	A039GP141	WG	N	10-Aug-05	SW8260B	DCBZ13	1,3-Dichlorobenzene	1	U	0.25	1	ug/L
039GP14138	A039GP141	WG	N	10-Aug-05	SW8260B	DCBZ14	1,4-Dichlorobenzene	1	U	0.25	1	ug/L
039GP14138	A039GP141	WG	N	10-Aug-05	SW8260B	DCE11	1,1-Dichloroethene	1	U	0.3	1	ug/L
039GP14138	A039GP141	WG	N	10-Aug-05	SW8260B	DCE12C	cis-1,2-Dichloroethylene	0.34	J	0.3	1	ug/L
039GP14138	A039GP141	WG	N	10-Aug-05	SW8260B	DCE12T	trans-1,2-Dichloroethene	1	U	0.3	1	ug/L
039GP14138	A039GP141	WG	N	10-Aug-05	SW8260B	DCE12TOT	1,2-Dichloroethene (total)	0.34	J	0.3	1	ug/L
039GP14138	A039GP141	WG	N	10-Aug-05	SW8260B	DCP13C	cis-1,3-Dichloropropene	1	U	0.25	1	ug/L
039GP14138	A039GP141	WG	N	10-Aug-05	SW8260B	DCP13T	trans-1,3-Dichloropropene	1	U	0.25	1	ug/L
039GP14138	A039GP141	WG	N	10-Aug-05	SW8260B	DCPA12	1,2-Dichloropropane	1	U	0.25	1	ug/L
039GP14138	A039GP141	WG	N	10-Aug-05	SW8260B	EBZ	Ethylbenzene	1	U	0.25	1	ug/L
039GP14138	A039GP141	WG	N	10-Aug-05	SW8260B	HXO2	2-Hexanone	5	U	1.25	5	ug/L
039GP14138	A039GP141	WG	N	10-Aug-05	SW8260B	MEK	Methyl ethyl ketone (2-Butanone)	5	U	1.25	5	ug/L

BIOBARRIER DPT RESULTS

SampleID	StationID	Matrix	SampleType	DateCollected	Method	ParamID	Paramname	AnaValue	ProjQual	MDL	RL	Units
039GP14138	A039GP141	WG	N	10-Aug-05	SW8260B	MIBK	Methyl isobutyl ketone (4-Methyl-2-pentanone)	5 U		1.25	5	ug/L
039GP14138	A039GP141	WG	N	10-Aug-05	SW8260B	MTLNCL	Methylene Chloride	5 U		2	5	ug/L
039GP14138	A039GP141	WG	N	10-Aug-05	SW8260B	PCA	1,1,2,2-Tetrachloroethane	1 U		0.25	1	ug/L
039GP14138	A039GP141	WG	N	10-Aug-05	SW8260B	PCE	Tetrachloroethylene (PCE)	1 U		0.25	1	ug/L
039GP14138	A039GP141	WG	N	10-Aug-05	SW8260B	STY	Styrene	1 U		0.25	1	ug/L
039GP14138	A039GP141	WG	N	10-Aug-05	SW8260B	TBME	Bromoform	1 U		0.25	1	ug/L
039GP14138	A039GP141	WG	N	10-Aug-05	SW8260B	TCA111	1,1,1-Trichloroethane	1 U		0.3	1	ug/L
039GP14138	A039GP141	WG	N	10-Aug-05	SW8260B	TCA112	1,1,2-Trichloroethane	1 U		0.25	1	ug/L
039GP14138	A039GP141	WG	N	10-Aug-05	SW8260B	TCB123	1,2,3-Trichlorobenzene	1 U		0.3	1	ug/L
039GP14138	A039GP141	WG	N	10-Aug-05	SW8260B	TCB124	1,2,4-Trichlorobenzene	1 U		0.3	1	ug/L
039GP14138	A039GP141	WG	N	10-Aug-05	SW8260B	TCE	Trichloroethylene (TCE)	1 U		0.25	1	ug/L
039GP14138	A039GP141	WG	N	10-Aug-05	SW8260B	TCLME	Chloroform	1 U		0.25	1	ug/L
039GP14138	A039GP141	WG	N	10-Aug-05	SW8260B	VA	Vinyl acetate	5 U		1.5	5	ug/L
039GP14138	A039GP141	WG	N	10-Aug-05	SW8260B	VC	Vinyl chloride	1 U		0.5	1	ug/L
039GP14138	A039GP141	WG	N	10-Aug-05	SW8260B	XYLENES	Xylenes, Total	1 U		0.25	1	ug/L
039GP14138	A039GP141	WG	N	10-Aug-05	SW8260B	XYLMP	m+p Xylene	2 U		0.25	2	ug/L
039GP14138	A039GP141	WG	N	10-Aug-05	SW8260B	XYLO	o-Xylene	1 U		0.25	1	ug/L

1A
VOLATILE ORGANICS ANALYSIS DATA SHEET

EPA SAMPLE NO.

039GW30IR2

Lab Name: GEL, LLC. Contract: N/A

Lab Code: N/A Case No.: N/A SAS No.: N/A SDG No.: 167061

Matrix: (soil/water) GROUND WAT Lab Sample ID: 167061001

Sample wt/vol: 5.000 (g/ml) ML Lab File ID: 2U216

Level: (low/med) LOW Date Received: 07/13/06

% Moisture: not dec. _____ Date Analyzed: 07/25/06

GC Column: DB-624 ID: 0.25 (mm) Dilution Factor: 1.0

Soil Extract Volume:_____(uL) Soil Aliquot Volume: _____(uL)

CAS NO.	COMPOUND	CONCENTRATION UNITS: (ug/L or ug/Kg) UG/L	Q
74-87-3	Chloromethane	1.0	U
75-01-4	Vinyl chloride	2.4	
74-83-9	Bromomethane	1.0	U
75-00-3	Chloroethane	1.0	U
75-35-4	1,1-Dichloroethylene	1.0	U
67-64-1	Acetone	10.0	U
75-15-0	Carbon disulfide	5.0	U
75-09-2	Methylene chloride	5.0	U
156-60-5	trans-1,2-Dichloroethylene	1.0	U
75-34-3	1,1-Dichloroethane	0.55	J
108-05-4	Vinyl acetate	5.0	U
78-93-3	2-Butanone	10.0	U
156-59-2	cis-1,2-Dichloroethylene	14.4	
540-59-0	1,2-Dichloroethylene (total)	14.4	
67-66-3	Chloroform	1.0	U
71-55-6	1,1,1-Trichloroethane	1.0	U
56-23-5	Carbon tetrachloride	1.0	U
107-06-2	1,2-Dichloroethane	1.0	U
71-43-2	Benzene	1.0	U
79-01-6	Trichloroethylene	4.8	
78-87-5	1,2-Dichloropropane	1.0	U
75-27-4	Bromodichloromethane	1.0	U
110-75-8	2-Chloroethylvinyl ether	5.0	U
10061-01-5	cis-1,3-Dichloropropylene	1.0	U
108-10-1	4-Methyl-2-pentanone	10.0	U
108-88-3	Toluene	1.0	U
10061-02-6	trans-1,3-Dichloropropylene	1.0	U
79-00-5	1,1,2-Trichloroethane	1.0	U
591-78-6	2-Hexanone	10.0	U
127-18-4	Tetrachloroethylene	1.0	U
124-48-1	Dibromochloromethane	1.0	U
108-90-7	Chlorobenzene	1.0	U
100-41-4	Ethylbenzene	1.0	U

1A
VOLATILE ORGANICS ANALYSIS DATA SHEET

EPA SAMPLE NO.

039GW30IR2

Lab Name: GEL, LLC. Contract: N/A

Lab Code: N/A Case No.: N/A SAS No.: N/A SDG No.: 167061

Matrix: (soil/water) GROUND WAT Lab Sample ID: 167061001

Sample wt/vol: 5.000 (g/ml) ML Lab File ID: 2U216

Level: (low/med) LOW Date Received: 07/13/06

% Moisture: not dec. _____ Date Analyzed: 07/25/06

GC Column: DB-624 ID: 0.25 (mm) Dilution Factor: 1.0

Soil Extract Volume:_____(uL) Soil Aliquot Volume: _____(uL)

CAS NO.	COMPOUND	CONCENTRATION UNITS: (ug/L or ug/Kg) UG/L	Q
95-47-6	o-Xylene	1.0	U
	m,p-Xylenes	2.0	U
1330-20-7	Xylenes (total)	3.0	U
100-42-5	Styrene	1.0	U
75-25-2	Bromoform	1.0	U
79-34-5	1,1,2,2-Tetrachloroethane	1.0	U
541-73-1	1,3-Dichlorobenzene	1.0	U
106-46-7	1,4-Dichlorobenzene	1.0	U
95-50-1	1,2-Dichlorobenzene	1.0	U
120-82-1	1,2,4-Trichlorobenzene	1.0	U
87-61-6	1,2,3-Trichlorobenzene	1.0	U

1A
VOLATILE ORGANICS ANALYSIS DATA SHEET

EPA SAMPLE NO.

039GW30IR5

Lab Name: GEL, LLC. Contract: N/A

Lab Code: N/A Case No.: N/A SAS No.: N/A SDG No.: 175181

Matrix: (soil/water) GROUND WAT Lab Sample ID: 175181008

Sample wt/vol: 5.000 (g/ml) ML Lab File ID: 5K507

Level: (low/med) LOW Date Received: 10/30/06

% Moisture: not dec. _____ Date Analyzed: 11/10/06

GC Column: DB-624 ID: 0.25 (mm) Dilution Factor: 1.0

Soil Extract Volume:_____(uL) Soil Aliquot Volume: _____(uL)

CAS NO.	COMPOUND	CONCENTRATION UNITS: (ug/L or ug/Kg) UG/L	Q
75-01-4	Vinyl chloride	2.7	J
75-35-4	1,1-Dichloroethylene	5.0	U
156-60-5	trans-1,2-Dichloroethylene	5.0	U
156-59-2	cis-1,2-Dichloroethylene	13.3	
540-59-0	1,2-Dichloroethylene (total)	13.3	
79-01-6	Trichloroethylene	4.7	J
127-18-4	Tetrachloroethylene	5.0	U

APPENDIX F

Responses to SCDHEC Comments

Response to Engineering Comments on SWMU 39 CMI WP, Revision 0
Charleston Naval Complex
Comments by Meredith Amick
Comments Dated March 12, 2008

General Comments

1. Disposal manifest generated during groundwater monitoring and injection events should be included in the subsequent Corrective Measure Progress Report.

   Response: Disposal manifests will be provided in subsequent Corrective Measures Progress Reports as requested if manifests are generated as part of those activities. It should be noted that for many of the groundwater monitoring and injection events, no hazardous waste is generated that requires offsite disposal. Therefore, no hazardous waste manifests are generated during these events. As previously discussed with the BCT, most of the purge water generated during monitoring is treated onsite using permanganate, then disposed of as non-hazardous waste to the sanitary sewer, as approved by County of Charleston Sanitation District. The injection events typically do not result in the generation of any hazardous waste.

   For these reasons, there are likely to be few manifests created during these events.

2. It is unclear why two different inspection checklists are attached to the document. Please clarify.

   Response: The first inspection checklist (LUC inspection form) was included based on previous BCT agreements. It was our understanding at the time the document was prepared that the second checklist, provided by DHEC, was also desired in the appendix. Based on subsequent BCT discussions, only the first checklist will be included. The second checklist can be removed.

Response to Hydrogeology Comments on SWMU 39 CMI WP, Revision 0
Charleston Naval Complex
Comments by Sommer Barker
Comments Dated March 12, 2008

---

1. Figures 3-1, SWMU 39 Source Area Wells, and 3-14, DPT Sampling Location, do not have legends. These figures should be updated to show the appropriate legend for each map.

   Response: Legends will be provided on revised figures.

2. The legend for Figure 3-7, VOCs in Well 39GW35D, has labeled the yellow line Series3. This legend should be updated to clarify exactly what this symbol is denoting.

   Response: Series 3 in this figure is vinyl chloride (VC). A revised figure will be provided.

3. In a letter from the Department to CNC dated March 21, 2007 (Hargrove to Gates), nine (9) monitoring wells at SWMU 39 were approved for abandonment. One of those wells, 039GW017D, was to be reinstalled prior to the next scheduled annual groundwater-monitoring event. The Department has no record of these nine wells being abandoned or of the reinstallation of well 039GW017D. The Navy should clarify whether these wells have been abandoned and whether documentation has been submitted to the Department.

   Further, CNC should clarify if a replacement well for well 039GW017D has been installed.

   Response: Eight of the nine wells requested for abandonment were properly abandoned as requested. A letter to Mr. Don Hargrove/SCDHEC, dated June 19, 2007, from Darryl Gates/CH2M HILL, provided copies of the SCDHEC form 1903 for these wells regarding their abandonment.

   One well, 039GW017D, was not abandoned, based on discussions with the site operator and the conclusion that abandonment of this well was not necessary. Therefore, a replacement well was not needed.

   Additional copies of the Form 1903s can be provided to SCDHEC if requested.

Annual Land Use Control (LUC) Compliance Certification
Charleston Naval Complex
EPA I.D. No SC0170022560

Property Owner: NOISETTE COMPANY **Property Conveyed Since Last Inspection?** _____
(Explain in Comments block)

Check months completed:

___ April ___ May ___ June (for semi-annual inspections) AND ___ October ___ November ___ December (write in year) _____

Site (SWMU site numbers through 499; AOC site numbers 500 and higher)	Restricted Media		Use Restrictions Communicated in Deed	Any LUC Violations Were Reported Within 3 Business Days of Discovery	Explanation of Actions Taken or to be Taken Provided Within 10 Days of Discovery	Groundwater Not Being Used	Monitoring Wells Not Disturbed	Land Not Being Used for Residential Use	Land Not Being Used for Recreational Use	Land Not Being Used for Agricultural Use	Soils Not Disturbed or Disturbed with Authorization via LUC Area Construction Permit	Engineering Controls Maintained	Landfill Cover Not Disturbed or Disturbed with Authorization via LUC Area Construction Permit	Zone	Notes (restrictions) W = groundwater use restriction; U = use restriction; E = engineering controls; D = digging/excavation restriction
	Groundwater	Soil	"Y" if Yes; "N" if No; "NA" if not applicable			"Y" if LUC has been maintained. "N" if LUC has not been maintained (explain in Comments section on page 2). Shading indicates particular LUC is not applicable.									
39	•	•												A	W, U, D
721	•													A	W
569/570/578	•	•												E	W, U, E, D
LUC Area (Zone E)	•	•												E	W, U, E, D Semi-annual

Diagonally split cells indicate a requirement for semi-annual inspections: April-June and October-December.

Annual Land Use Control (LUC) Compliance Certification
Charleston Naval Complex
EPA I.D. No SC0170022560

Property Owner: **NOISETTE COMPANY** **Check Type of Inspection:** ___ **Drive-through** ___ **Walk-through**

I, the undersigned, hereby certify that I am an authorized representative of **NOISETTE COMPANY** and that the above described land use controls have been complied with for the calendar year _____. Any known deficiencies and completed or planned actions to address such deficiencies are described in the attached explanation of deficiencies. I have also attached a map to this certification showing the sites and the LUCs in place at each site.

Signature _____ Relationship to Property Owner _____ Date _____

Printed Name _____ Phone Number (_____) _____

Address _____ City _____ Zip Code _____

Comments: (attach additional sheets as needed)
A map is attached showing the LUCs in place at each site.

Mail original completed certification to SCDHEC (WM), with copies to SC DHEC (SAR), US EPA, and the US Navy at the below addresses:

SCDHEC (Waste Management Division) South Carolina Department of Health and Environmental Control Bureau of Land and Waste Management Attn: Director, Waste Management Division 2600 Bull Street Columbia, SC 29201	**SCDHEC (Site Assessment & Remediation Division)** South Carolina Department of Health and Environmental Control Bureau of Land and Waste Management Attn: Director, Site Assessment & Remediation Division 2600 Bull Street Columbia, SC 29201
US EPA US Environmental Protection Agency Region 4 Federal Facilities Branch Attn: Charleston Naval Complex RPM 61 Forsyth Street SW Atlanta, GA 30303-8909	**US Navy** BRAC Program Management Office Southeast Attn: Charleston Naval Complex RPM 4130 Faber Place Dr Ste 202 North Charleston, SC 29405

CHARLESTON NAVAL COMPLEX LUC AREA CONSTRUCTION PERMIT

GENERAL INFORMATION:

Requestor:	Location: (Include Bldg Nos. and Streets)	Date of Request:
Contractor:	Subcontractors:	SWMUs/AOCs Impacted:

PROPOSED WORK:

Scope of Work: (Attach sketches, drawings & information outlined in Process to Conduct Construction Activities Document)

Construction Schedule (planned start date - planned completion date):

LAND USE CONTROLS:

Current Land Use Controls on Construction Area:

Frequency and Date of Next LUC Inspection for Construction Area:

Potential Effect of Proposed Construction on LUCs:

CERTIFICATIONS:

As a representative of the property owner of the subject property, I hereby certify that: (check all that apply)

- ☐ 1. I possess an updated copy of the CNC LUC Areas Map and Interim Measures Work Plan.
- ☐ 2. I acknowledge that residual contamination exists on the subject property and am aware that further information on site contaminants can be found in the Administrative Record located at Bldg 7, 1330 Truxton Ave, Suite 300.
- ☐ 3. Information regarding SWMUs/AOCs, and contaminants will be provided to all contractors and subcontractors. Contractor and subcontractor representatives to sign below signifying receipt of information.

Contractor	Name/Signature	Date
Sub-Contractor	Name/Signature	Date

- ☐ 4. The proposed construction will not change the land use (i.e., from industrial to residential)
- ☐ 5. Personnel hazards will be controlled where construction activities have the potential to interfere with existing remedies. Exposure controls such as PPE, exclusion zones, etc. will be utilized.
- ☐ 6. Dewatering will not affect migration of contaminants, and water under groundwater use restriction will be tested and properly disposed.
- ☐ 7. Excess soil under digging restriction will be tested and properly disposed.
- ☐ 8. Exposure assumptions used in deriving LUCs will not be altered.
- ☐ 9. Impacts to the remedy as a result of construction activities will be monitored (I.e., groundwater flow direction, vertical migration of residual contamination, and potential for migration to indoor air.)
- ☐ 10. Any previously unknown contamination will be reported immediately to the Navy (within 7 days of discovery).

Printed Name & Signature of Requesting Official	Property Representing & Phone Number:	Date:

NAVY REVIEW:

☐ Requestor *Authorized to Proceed ☐ Further Information is Requested ☐ Permit Denied ☐ Comments attached	Signatures: _____ Navy RPM/BEC _____ CH2M-Hill	Serial No: _____ Date: _____

*Authorization to proceed does not constitute approval of methods by which environmental, safety, and other regulations are satisfied