N61165.AR.003393
CNC CHARLESTON
5090.3a

RESOURCE CONSERVATION AND RECOVERY ACT FACILITY INVESTIGATION REPORT SOLID WASTE MANAGEMENT UNITS 197 AND 198 (SWMU 197) AND (SWMU 198) ZONE K NAVAL STATION ANNEX CNC CHARLESTON SC

10/26/2005

CH2M HILL

RFI REPORT

SWMUs 197 and 198
Zone K Naval Station Annex

Charleston Naval Complex
North Charleston, South Carolina

SUBMITTED TO
U.S. Navy Southern Division
Naval Facilities Engineering Command

CH2M Jones

October 2005

Contract N62467-99-C-0960

CH2M HILL
3011 SW Williston Road
Gainesville, FL 32608-3928
P.O. Box 147009
Gainesville, FL 32614-7009
Tel 352.335.7991
Fax 352.335.2959

CH2MHILL

October 26, 2005

Mr. David Scaturo
South Carolina Department of Health and
Environmental Control
Bureau of Land and Waste Management
8901 Farrow Road
Columbia, SC 29203

Re: RFI Report (Revision 1) – SWMUs 197 and 198, Zone K Naval Station Annex

Dear Mr. Scaturo:

Enclosed please find two copies of the RFI Report (Revision 1) for SWMUs 197 and 198 in Zone K Naval Station Annex of the Charleston Naval Complex (CNC). This report has been prepared pursuant to agreements by the CNC BRAC Cleanup Team for completing the RCRA Corrective Action process.

The material attached serves to replace the pages of the Revision 0 RFI Report for SWMUs 197 and 198, Zone K. Please insert in the Revision 0 binder accordingly.

Please contact me at 352/335-5877, ext. 2280, if you have any questions or comments.

Sincerely,

CH2M HILL

Dean Williamson, P.E.

cc: Dann Spariosu/USEPA, w/att
Rob Harrell/Navy, w/att
Gary Foster/CH2M HILL, w/att

RFI REPORT

SWMUs 197 and 198
Zone K Naval Station Annex

Charleston Naval Complex
North Charleston, South Carolina

SUBMITTED TO
U.S. Navy Southern Division
Naval Facilities Engineering Command

PREPARED BY
CH2M-Jones

October 2005

Revision 1
Contract N62467-99-C-09602
258814.ZK.EX.10

Certification Page for RFI Report (Revision 1) – SWMU 197 and SWMU 198, Zone K

I, Dean Williamson, certify that this report has been prepared under my direct supervision. The data and information are, to the best of my knowledge, accurate and correct, and the report has been prepared in accordance with current standards of practice for engineering.

South Carolina

P.E. No. 21428

Dean Williamson

Dean Williamson, P.E.

October 19, 2005

Date

Contents

Section **Page**

Acronyms and Abbreviations ..... **vi**

1.0 Introduction **1-1**

1.1 Purpose of the RFI Report 1-1

1.2 Report Organization 1-2

Figure 1-1 Location of SWMUs 197 and 198 and Zone K within the CNC 1-3

Figure 1-2 Location Map of SWMUs 197 and 198 1-4

2.0 Summary of RFA and Zone Geology and Hydrogeology **2-1**

2.1 Facility Descriptions and Historical Operations 2-1

2.2 RFA Recommendation 2-3

2.3 Site Geology and Hydrogeology 2-3

Table 2-1 Groundwater Velocity Calculations 2-5

Figure 2-1 Lithologic Cross Section A-A′ 2-6

Figure 2-2 Lithologic Cross Section B-B′ 2-7

Figure 2-3 Lithologic Cross Section C-C′ 2-8

Figure 2-4 Inferred Top of Ashley 2-9

Figure 2-5 Shallow Groundwater Potentiometric Map 2-10

Figure 2-6 Deep Groundwater Potentiometric Map 2-11

3.0 RFI Technical Approach **3-1**

3.1 RFI Purpose and Objectives 3-1

3.2 Identified Investigation Areas and Potential Migration Pathways 3-1

3.3 Proposed Sampling and Analysis 3-2

3.3.1 Soil Sampling 3-2

3.3.2 Groundwater Sampling 3-2

3.4 Data Analysis and Screening 3-3

3.5 Sample Collection and Analyses Procedures and Methodology 3-4

3.5.1 Sample Collection 3-4

3.5.2 Sample Analyses 3-4

3.6 SCDHEC Well Installation Request 3-5

Figure 3-1 RFI Sample Locations 3-6

Figure 3-2 Locations of New Monitoring Wells 3-7

Contents, Continued

4.0 Summary of RFI Results for SWMUs 197 and 198 4-1
4.1 Soil Results 4-1
4.1.1 Surface Soil Results 4-1
4.1.2 Subsurface Soil Results 4-2
4.2 Groundwater Investigation 4-3
4.2.1 Groundwater Sampling and Analysis 4-3
4.2.2 Groundwater Sampling Results 4-3
4.3 COPC Summary 4-4
Table 4-1 Chemicals Detected in Surface Soil 4-5
Table 4-2 Chemicals Detected in Subsurface Soil 4-9
Table 4-3 Results for Unfiltered Groundwater Samples Collected Using Geoprobe at SWMUs 197/198 4-12
Table 4-4 Results of Metals Analysis for Groundwater Samples in New Wells at SWMU 197/198 4-14
5.0 Risk Assessment 5-1
5.1 Surface Soil COPCs 5-1
5.1.1 Benzo(a)pyrene Equivalents 5-1
5.1.2 Chromium 5-2
5.2 Subsurface Soil COPCs 5-3
5.2.1 Pentachlorophenol 5-3
5.3 Summary of COCs 5-3
6.0 Recommendations 6-1
7.0 References 7-1

Appendices

A Site Photographs
B Analytical Data from RFI Addendum Investigation
C Data Validation Reports
D Well Construction Diagrams and Development Logs
E CH2M-Jones' Responses to SCDHEC Comments

Acronyms and Abbreviations

AST	Aboveground storage tank
BCT	BRAC Cleanup Team
BEQ	Benzo(a)pyrene equivalent
BRAC	Base Realignment and Closure Act
BRC	Background reference concentration
CA	Corrective action
CNC	Charleston Naval Complex
COC	Chemical of concern
COPC	Chemical of potential concern
cPAH	Carcinogenic polycyclic aromatic hydrocarbon
CSAP	Comprehensive Sampling and Analysis Plan
CVOC	Chlorinated volatile organic compound
DAF	Dilution attenuation factor
DPT	Direct-push technology
DQO	Data quality objective
EBST	Environmental Baseline Survey for Transfer
EnSafe	EnSafe Inc.
EPA	U.S. Environmental Protection Agency
ft bls	Feet below land surface
ft msl	Feet mean sea level
HI	Hazard index
IM	Interim measure
MCL	Maximum contaminant level
MCS	Media cleanup standard
MDL	Method detection limit
µg/L	Microgram per liter
mg/kg	Milligram per kilogram
NAVBASE	Naval Base
NFA	No further action

Acronyms and Abbreviations, Continued

OWS	Oil/water separator
PAH	Polycyclic aromatic hydrocarbon
PCB	Polychlorinated biphenyl
PCP	Pentachlorophenol
PRG	preliminary remediation goal
QA/QC	Quality assurance/quality control
RAO	Remedial action objective
RBC	Risk-based concentration
RCRA	Resource Conservation and Recovery Act
RFA	RCRA Facility Assessment
RFI	RCRA Facility Investigation
RGO	Remedial goal option
SCDHEC	South Carolina Department of Health and Environmental Control
SSL	Soil screening level
SWMU	Solid waste management unit
SVOC	Semivolatile organic compound
TCE	Trichloroethene
TEAP	Terminal electron accepting process
TPH	Total petroleum hydrocarbon
UCL_{95}	95-percent upper confidence limit
UST	Underground storage tank
VOC	Volatile organic compound

Section 1.0

1.0 Introduction

In 1993, Naval Base (NAVBASE) Charleston was added to the list of bases scheduled for closure as part of the Defense Base Realignment and Closure Act (BRAC), which regulates closure and transition of property to the community. The Charleston Naval Complex (CNC) was formed as a result of the dis-establishment of the Charleston Naval Shipyard and NAVBASE on April 1, 1996.

Corrective Action (CA) activities are being conducted under the Resource Conservation and Recovery Act (RCRA), with the South Carolina Department of Health and Environmental Control (SCDHEC) as the lead agency for CA activities at the CNC. All RCRA CA activities are performed in accordance with the Final Permit (Permit No. SC0 170 022 560).

In April 2000, CH2M-Jones was awarded a contract to provide environmental investigation and remediation services at the CNC. This submittal has been prepared by CH2M-Jones to complete the RCRA Facility Investigation (RFI) for Solid Waste Management Units (SWMUs) 197 and 198 in Zone K of the CNC. Figure 1-1 presents the locations of Zone K and SWMUs 197 and 198 at the CNC. Figure 1-2 shows the sites and the major site features. Photographs of the sites are provided in Appendix A.

SWMU 197 includes Building 2532, an old paint storage shed, and a concrete walled structure, and SWMU 198 is a concrete slab located directly across Sixth Street from Building 2532 that was possibly used as a satellite accumulation area. The Navy conducted an RFI in 1996 for Zone K. At the time of the Zone K RFI, SWMUs 197 and 198 had not been identified.

1.1 Purpose of the RFI Report

This RFI Report presents the results from the RFI for SWMUs 197 and 198. The investigation was conducted in accordance with the requirements presented in the RFI Work Plan as documented in the *RCRA Facility Assessment and RFI Work Plan Addendum, SWMUs 163, 197, 198, Zone K Naval Station Annex* (CH2M-Jones, 2004). This document evaluates the data obtained from the RFI and provides conclusions regarding further RCRA CA at SWMUs 197 and 198.

Because no chemicals of concern (COCs) were identified based on the investigation findings, SWMUs 197 and 198 are recommended for no further action (NFA). Information presented in this report will serve as the justification for NFA at SWMUs 197 and 198.

1.2 Report Organization

This RFI Report consists of the following sections, including this introductory section:

1.0 Introduction — Presents the purpose and organization of the RFI Report.

2.0 Summary of RFA and Zone K Geology and Hydrogeology — Summarizes the conclusions from the RCRA Facility Assessment (RFA) and Zone K geology and hydrogeology.

3.0 RFI Technical Approach — Provides the rationale and methodology used during the RFI investigation relating to sample collection and analyses.

4.0 Summary of RFI Results for SWMUs 197 and 198 — Summarizes the data collected during the RFI activities at SWMUs 197 and 198.

5.0 Risk Assessment — Presents a human health risk assessment using the data collected during the RFI.

6.0 Recommendations — Provides recommendations for NFA at SWMUs 197 and 198.

7.0 References — Lists the references used in this document.

Appendix A contains photographs of the sites.

Appendix B contains data summary tables from the analysis completed during the RFI.

Appendix C contains the validation report for the analytical data generated during the RFI.

Appendix D contains the well construction diagrams and development logs for the two newly installed permanent monitoring wells at SWMU 197 and SWMU 198.

Appendix E contains CH2M-Jones' comments to SCDHEC comments on the *RFI Report, SWMU 197 and SWMU 198, Zone K, Revision 0* (November 12, 2004).

All tables and figures appear at the end of their respective sections.

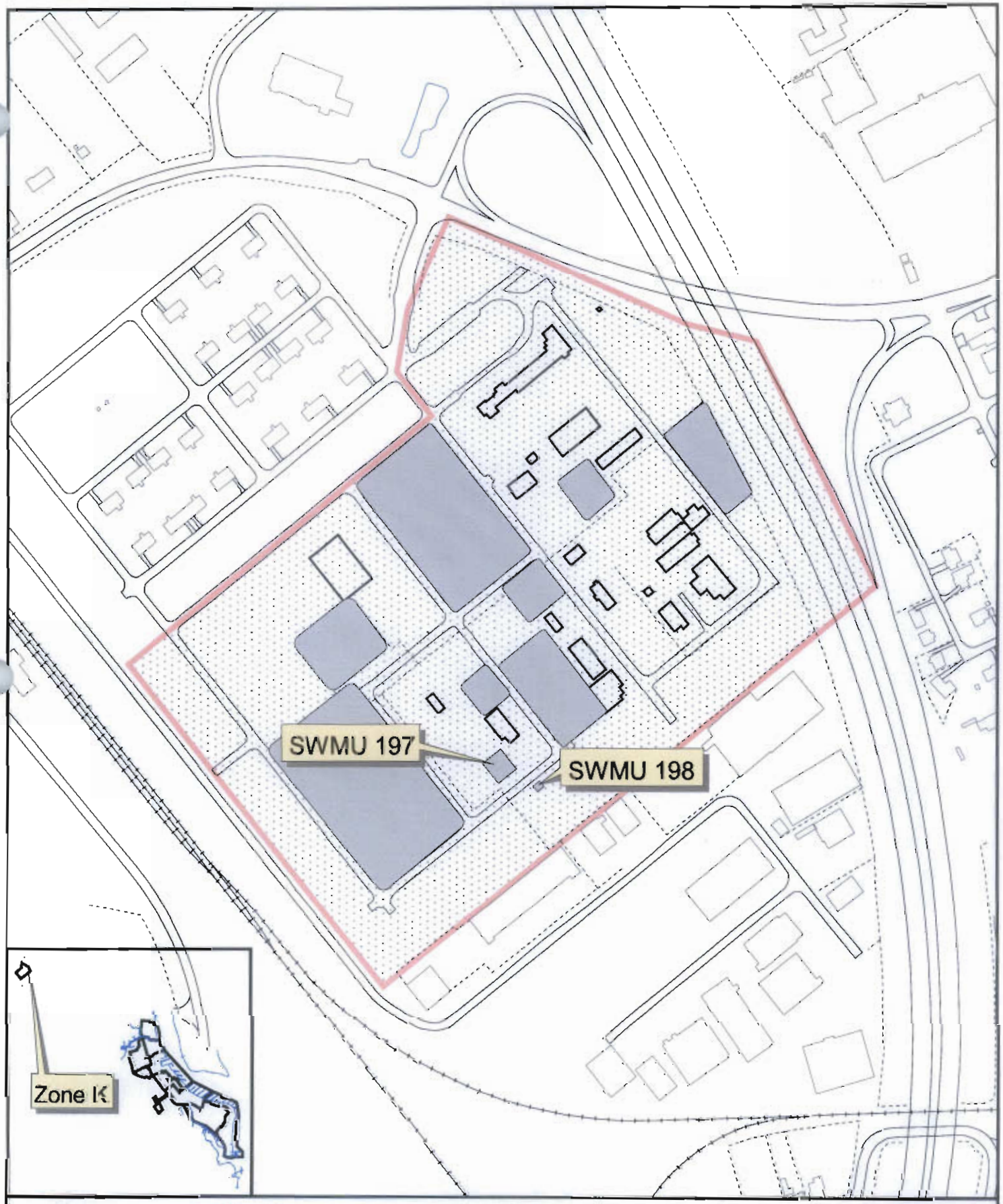

Fence
Railroads
Roads
AOC Boundary
SWMU Boundary
Buildings
Zone Boundary

N

0 300 600 Feet

1 inch = 333.333 feet

Figure 1-1
Location of SWMU 197, 198 and Zone K within the CNC
SWMU 197 and 198, Zone K
Charleston Naval Complex

CH2MHILL

File Path: C:\18gis\Projects\Zone_K\SWMU_163\APR\swmu163.apr, Date: July 19 200413:15, User: JHenderson, FIG1-1 SWMU 197 198

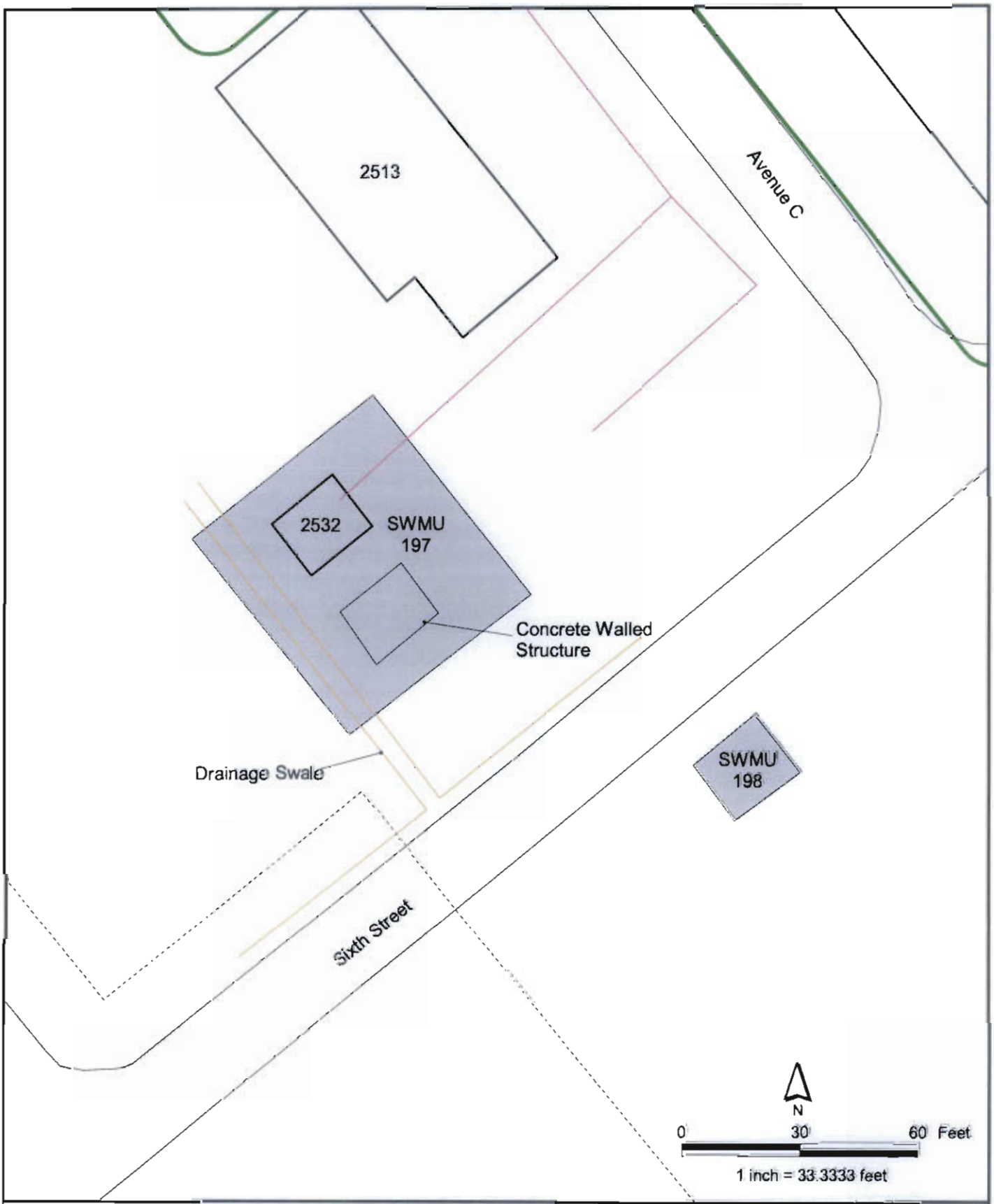

Fence
Roads
Sewer Line
Drainage Swale
Buildings
SWMU 197 & 198 Boundary
SWMU Boundary

Figure 1-2
Location Map
SWMUs 197 and 198
Zone K
Charleston Naval Complex

Note: Location of SWMUs 197 and 198 are approximate

File Path: C:\18gis\Projects\Zone_K\SWMU_197_198\APRs\swmu197&198.apr, Date: 27 Jul 2004 10:40, User: ASPOSAT0, Figure 1-2 Location Map

CH2MHILL

Section 2.0

2.0 Summary of RFA and Zone Geology and Hydrogeology

2.1 Facility Descriptions and Historical Operations

SWMUs 197 and 198 were not identified as SWMUs during the Zone K RFI conducted in 1996. The SWMUs were identified by SCDHEC during a walk-through of the Naval Station Annex in June 2002. Little information is known or available concerning the history of these SWMUs.

SWMU 197

SWMU 197, identified by SCDHEC as Building 2532, includes a single-story structure and a concrete walled structure. Building 2532 and the concrete walled structure are no longer in use. SWMU 197 is located approximately 140 feet northeast of the corner of Sixth Street and Avenue D. Building 2532 originally housed a boiler and was built with metal walls and a roof. Its approximate dimensions are 20 feet by 16 feet. The floor was painted and is now peeling and flaking in areas. The construction date is unknown. A review of historical engineering drawings indicates that a small floor drain inside Building 2532 was connected to the sewer line exiting the building on the east side. These same drawings indicate the sewer line has been capped. After being used as a boiler facility, Building 2532 was used as a paint storage locker. No historical records were located that describe the materials associated with the paint storage shed or concrete walled structure located within SWMU 197. Paints and petroleum fuel for the boiler were presumably used.

According to the Environmental Baseline Survey for Transfer (EBST) for the nearest building (i.e., Building 2532), the existing transformers at Building 2532 are in polychlorinated biphenyl (PCB) compliance.

The enclosed concrete walled structure is less than 3 feet high, lies south/southeast of Building 2532, and appears to be secondary containment foundation for an aboveground storage tank (AST). Concrete support cradles exist within the walled structure. The concrete walled structure has concrete flooring. The area was presumably used for boiler fuel storage.

SWMU 197 also includes a portion of the nearby adjacent drainage swale on the west side of the building. Areas of stressed vegetation were reported in isolated areas near and in the

drainage swale and surrounding and south of the concrete walled structure. The cause of the vegetative stress may have been drought conditions at the time.

No underground storage tanks (USTs) or oil/water separators (OWSs) are known to be associated with SWMU 197. There were no apparent UST/AST-related investigations completed under the SCDHEC UST program. There is no documentation supporting the completion of an interim measure (IM) at SWMU 197 as part of the RCRA CA program.

SWMU 198

SWMU 198, located directly south of Sixth Street from Building 2532, is a concrete slab approximately 6 inches thick that was likely used as a satellite accumulation area for waste material. Based on a review of a 1970 historical site drawing of the Naval Station Annex, electrical distribution system, it appears the concrete slab was once used to support three 100-KVA transformers. Currently, the concrete pad is vacant and there is no evidence of the transformer usage, except for an overhead electrical service pole located adjacent to the concrete pad. There is no record of when the transformers were used and/or removed from the site. A review of historical engineering drawings indicates the concrete pad was not a building foundation, since there is no evidence that a building or shed existed.

The concrete slab, mostly rectangular in shape, has stenciled markings depicting areas for hazardous waste, spray cans, and 5-gallon cans with no lids. The concrete pad appears to be structurally intact, with only minor imperfections or small cracks in its surface. Review of a Naval Station Annex utility drawing does not indicate the existence of any underground utilities at SWMU 198.

No historical records were located that describe the materials temporarily staged on the concrete slab. Based on the stencil markings, it is assumed that the concrete slab was used as a satellite accumulation area for waste materials and may have been used as a staging area for old paint or other material used in industrial settings.

The SWMU 198 boundary encompasses the existing concrete pad. No USTs, ASTs, or OWSs are known to be associated with SWMU 198. There were no documented uses of a UST or AST within the SWMU 198 boundary, based on a review of the UST program files. In addition, there were no other UST/AST-related investigations under the SCDHEC UST program. There is no documentation supporting the completion of an IM at SWMU 198 as part of the RCRA CA program.

2.2 RFA Recommendation

The EBST did not note any evidence of spills at SWMUs 197 or 198, and there is no information in the EBST to indicate past spills at these sites. However, given the historical operations at these sites, the SCDHEC recommended an RFI be completed at SWMUs 197 and 198. The technical approach used in conducting the RFI at SWMUs 197 and 198 is presented in Section 3.0 of this RFI Report.

2.3 Site Geology and Hydrogeology

A description of site geology and hydrogeology is provided in Section 2.0 of the *Zone K RFI Report, Revision 0* (EnSafe Inc. [EnSafe], 1999). Three primary lithologies were identified during the Zone K RFI monitoring well (MW) installation activities. The uppermost lithologic unit (Qts) is primarily clean, well-sorted, fine- to medium-grained sand. Qts is 20 to 25 feet in thickness. Shallow wells installed at the Annex are screened within the Qts unit. Below Qts is another sand unit (Qtc). Qtc is made up of fine to medium sand with silt, clay lenses, with trace phosphatic nodules and shell hash. Qtc is approximately 10 feet in thickness. The deep wells installed at the Annex are primarily screened within Qtc. Below the Qts unit is the Ashley Formation (Ta), a regional confining layer.

Three lithologic cross sections of the Naval Station Annex were constructed using well log geologic descriptions of the subsurface collected during the original RFI activities and new geologic data collected subsequent to the *Zone K RFI Report* (EnSafe, 1999). These lithologic cross sections are identified as Figures 2-1 through 2-3. Lithologic cross section A-A′ (see Figure 2-1) transverses through the entire Naval Station Annex, initiating at the western portion of the property and terminating east of Interstate (I)-26. Lithologic cross sections B-B′ (see Figure 2-2) and C-C′ (see Figure 2-3) transverse perpendicular (i.e., northwest to southeast) to cross section A-A′ through the western and eastern sections, respectively, of the Annex property.

The Ashley Formation (Ta) underlies Qtc throughout the region as well as the Annex, and the formation is a tight, slightly calcareous, clayey silt with varying amounts of fine-grained sand that decreases rapidly with depth. The Ashley Formation is firm to stiff, and it is low in plasticity. Elevation of the Ashley Formation ranges from 9.9 feet msl at K1660GW9D to 3.2 feet msl at K166GW05D. A structural contour map of the top of the Ashley Formation for the Naval Station Annex is provided as Figure 2-4.

Groundwater elevations at nearby site SWMU 163 (110 feet northeast of Building 2532 – SWMU 197) vary seasonally, ranging from 5 to 7 feet below land surface (ft bls) or approximately 33 to 35 ft mean sea level (ft msl). Shallow and deep groundwater at SWMU 163 flows south-southeast. Figures 2-5 and 2-6 present potentiometric surface maps of the shallow and deep portions of the surficial aquifer using groundwater elevation data collected on February 22, 2002.

Groundwater velocities were calculated using the shallow and deep groundwater flow paths in select areas of the Naval Station Annex, as presented in Figures 2-5 and 2-6. The calculations used the most recent groundwater elevation data collected in February 2002 and the aquifer effective porosity and hydraulic conductivity values provided in the *Zone K RFI Report* (EnSafe, 1999). The groundwater velocities, presented in Table 2-1, range from 0.025 to 0.038 ft/day [9 to 14 ft/yr] and are similar to the values presented in Table 2.13 from the *Zone K RFI Report*.

TABLE 2-1
Groundwater Velocity Calculations
RFI Report, SWMUs 197 and 198, Zone K Charleston Naval Complex

Groundwater Flowpath[a]	Average Effective Porosity[b]	K_h[b] (ft/day)	i[b]	Velocity (ft/day)
Shallow Groundwater (greater than 20 ft msl)				
A	0.45	5.9	0.0029	0.038
Deep Groundwater (less than 20 ft msl)				
B	0.409	2.2	0.0047	0.025

[a] Groundwater flow paths are presented in Figures 2-5 and 2-6

[b] EnSafe Inc. *Zone K RFI Report*. Revision 0. June 11, 1999. Porosity values from geotechnical data were substituted for effective porosity (n_e) values.

K_h Hydraulic conductivity

i Horizontal Hydraulic gradient

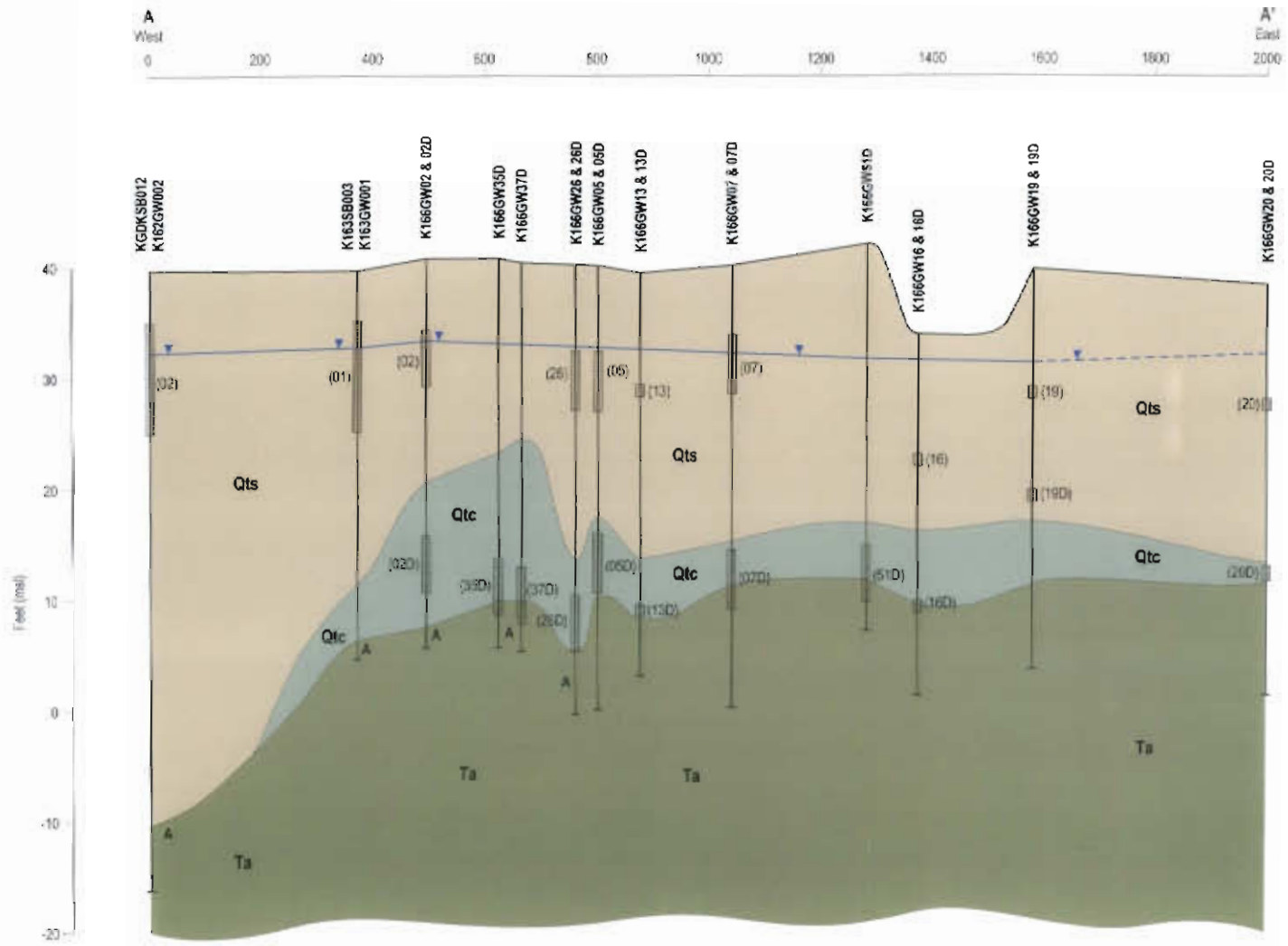

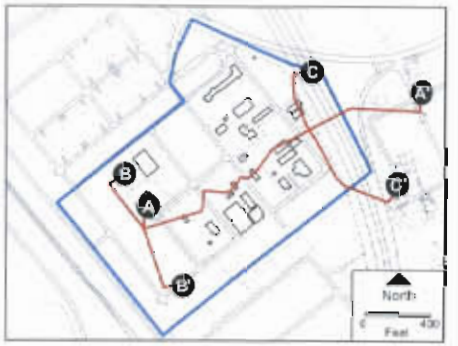

10 Feet

200 Feet

Monitoring Well Screen

Qts Clean Sand Facies, Quartz Sand
gray, orange, or brown; fine to medium grained

Qtc Clayey Sand and Clay Facies, Clayey Quartz Sand
typically greenish gray, light gray, or orange; fine to medium grained; poorly sorted

Ta Silt
typically olive brown; clayey; calcareous; Ashley Formation

Potentiometric Surface (February 22, 2002) (Dashed where inferred)

Figure 2-1
Lithologic Cross Section A-A'
Zone K
Charleston Naval Complex

CH2MHILL

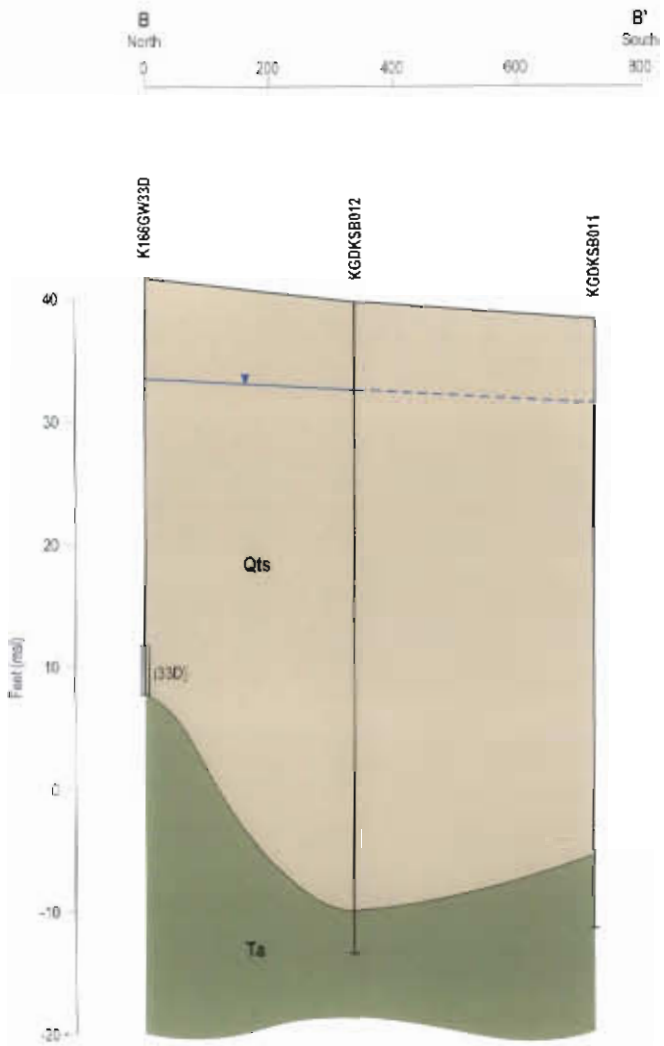

Monitoring Well Screen

Qts Clean Sand Facies, Quartz Sand
gray, orange, or brown; fine to medium grained

Ta Silt
typically olive brown; clayey, cocarbonate, Ashley Formation

Potentiometric Surface (February 22, 2002) (Dashed where inferred)

Figure 2-2
Lithologic Cross Section B-B'
Zone K
Charleston Naval Complex

CH2MHILL

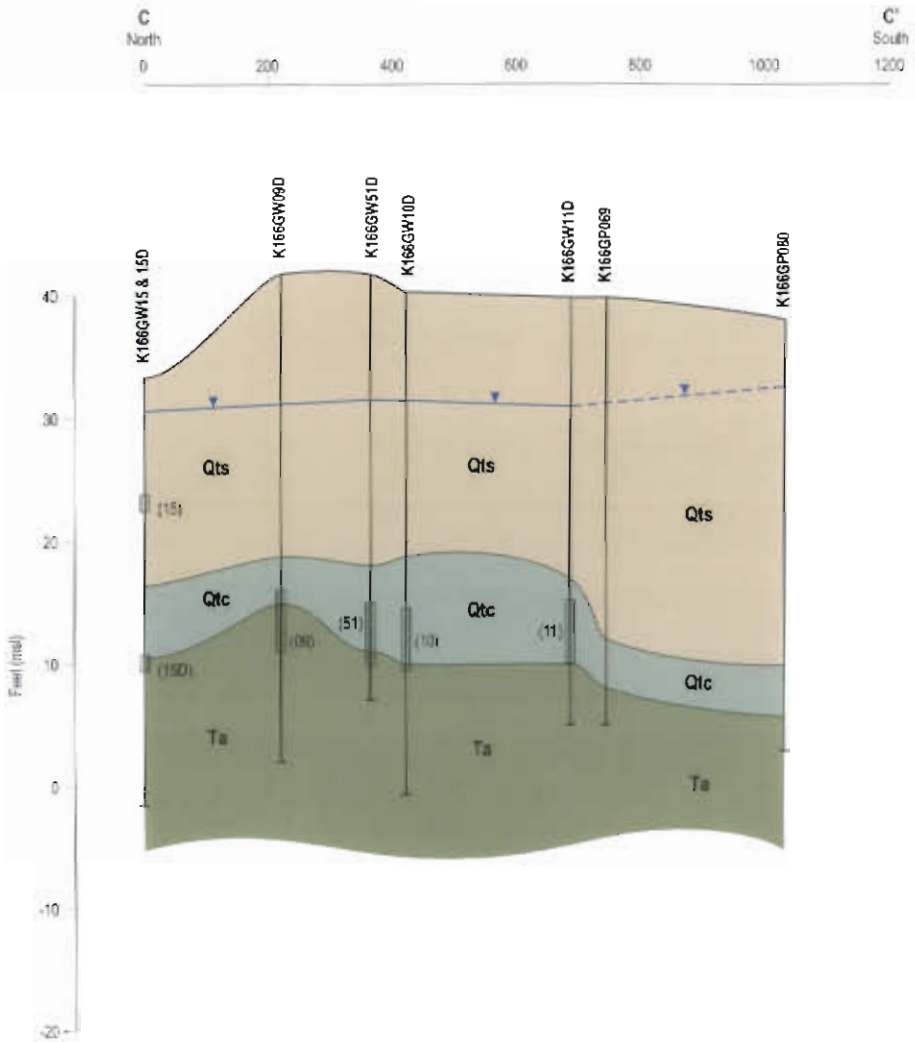

Monitoring Well Screen

Qts Clean Sand Facies, Quartz Sand
gray, orange, or brown; fine to medium grained

Qtc Clayey Sand and Clay Facies, Clayey Quartz Sand
typically greenish gray light gray, or orange; fine to medium grained; poorly sorted

Ta Silt
typically olive brown; clayey, calcareous, Ashley Formation

Potentiometric Surface (February 22, 2002) (Dashed where inferred)

Figure 2-3
Lithologic Cross Section C-C'
Zone K
Charleston Naval Complex

CH2MHILL

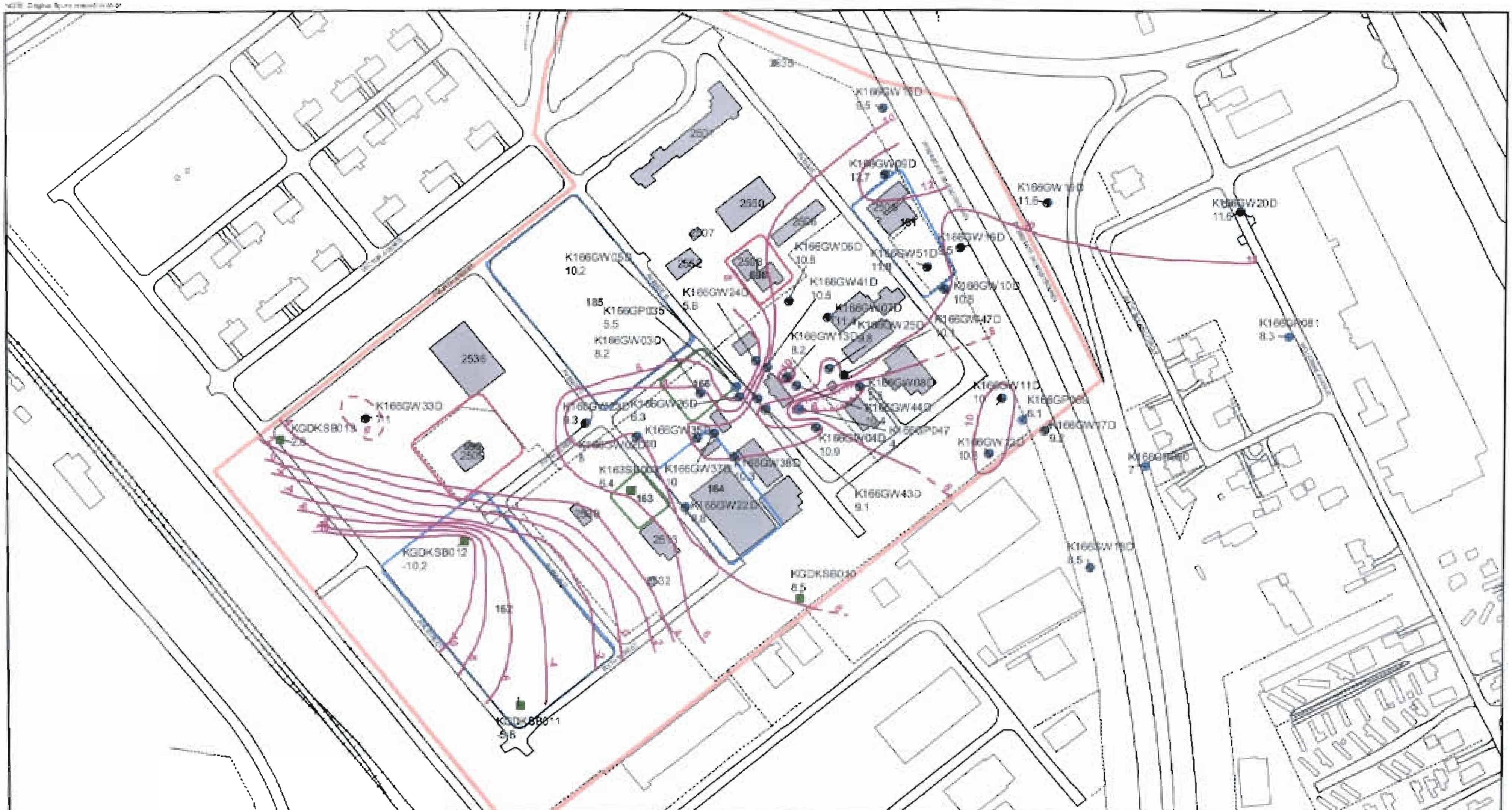

- Monitoring Well Location
- DPT Location
- Soil Boring Location
- Known Top of Ashley Formation (ft msl)
- Inferred Top of Ashley Formation (ft msl)
- Fence
- Roads
- Active SWMU Boundary
- NFA AOC Boundary
- NFA SWMU Boundary
- Buildings
- Zone Boundary

N

0 100 200 Feet

1 inch = 300 feet

Figure 2-4
Inferred Top of Ashley
Zone K
Charleston Naval Complex

CH2MHILL

Section 3.0

3.0 RFI Technical Approach

3.1 RFI Purpose and Objectives

The RFI was conducted to evaluate the nature and extent of any releases of hazardous constituents associated with past operations at SWMUs 197 and 198. Delineation of the nature and extent of contamination in soil and groundwater is necessary to complete the RFI.

3.2 Identified Investigation Areas and Potential Migration Pathways

This section discusses the investigated areas and potential migration pathways as presented in the RFI Work Plan (CH2M-Jones, 2004).

SWMU 197

The floor area within Building 2532 is paved with thick concrete, and no cracks or other penetrations exist. There are one rectangular and two small circular impressions within the floor that have been filled with concrete that may have been caused or used at one time to support the boiler.

The site outside the concrete walled structure and Building 2532 is not paved with concrete and asphalt, so the potential for surface runoff of contaminated surface soil, if present, could be a concern. Areas of stressed vegetation were reported to exist in isolated areas near and in the drainage swale and surrounding and south of the concrete walled structure.

Due to the shallow depth to groundwater in this area (approximately 5 to 7 ft bls, groundwater is a potential migration pathway.

SWMU 198

The concrete pad is structurally intact, with no apparent large cracks or other penetrations. Because the area surrounding the concrete pad is not paved, the potential for surface water runoff from the pad impacting the adjacent soil is a concern. As a result, the potential for surface runoff of contaminated soil and leaching of chemicals to groundwater are identified as potential migration pathways. However, there are no identified areas of stressed vegetation adjacent to the concrete pad.

Due to the shallow depth to groundwater in this area (approximately 5 to 7 ft bls), groundwater is a potential migration pathway.

3.3 Proposed Sampling and Analysis

On January 23, 2004, CH2M-Jones presented an RFA and RFI Work Plan Addendum to SCDHEC. The RFA and RFI Work Plan Addendum described the known past uses of SWMUs 197 and 198 and proposed an approach for completing the RFI at SWMUs 163, 197, and 198, including the sampling parameters, the media to be sampled, and the sample locations. SCDHEC approved the RFA and RFA Work Plan Addendum on March 2, 2004.

3.3.1 Soil Sampling

There are no known releases of hazardous substances to the environment at SWMUs 197 and 198 and no documentation of visual evidence of contamination during any of the site inspections or previous field work. At SWMU 197, soil samples were collected on May 13, 2004, from the vicinity of the concrete walled structure, the adjacent drainage swale, and the east side of Building 2532 where, based on the Annex utility drawing, the sewer line exited the building. Soil sampling conducted at SWMU 198 on May 13, 2004, addressed the soil immediately surrounding the concrete pad. The RFI soil sampling locations are shown on Figure 3-1.

At each soil sampling location, a surface soil (0 to 1 ft bls) and a subsurface soil (3 to 5 ft bls) sample were collected for analyses.

All soil samples were analyzed for volatile organic compounds (VOCs) (U.S. Environmental Protection Agency [EPA] Method 8260B), semivolatile organic compounds (SVOCs) (EPA Method 8270), and metals (EPA Method 6010B). In addition, all soil samples collected from SWMU 198 were analyzed for PCBs (EPA Method 8082).

3.3.2 Groundwater Sampling

Previous Groundwater Investigations in Vicinity of SWMUs 197 and 198

During the Zone K RFI, site groundwater samples in the immediate area of SWMU 163 (110 feet north of Building 2532) and a series of temporary grid samples south of Sixth Street were collected. Three Geoprobe points, advanced using direct-push technology (DPT), are within 100 feet of SWMUs 197 and 198. Chlorinated volatile organic compounds (CVOCs) were not detected above their corresponding maximum contaminant level (MCL) in any of the samples collected from Geoprobe points KGDKGP007 and KGDKGP019, approximately 70 feet and 30 feet, respectively, upgradient of Building 2532.

Geoprobe point KGDKGP019 was advanced in an area that evaluated potential low-level contaminant migration from the western portion of the Annex. KGDKGP019 is approximately 95 feet southeast or hydraulically downgradient of SWMU 198. Samples were collected from the Geoprobe point in May 2001 during the additional RFI activities conducted by CH2M-Jones. Trichloroethene (TCE) detected at a concentration of 8.3 micrograms per liter (μg/L) was the only VOC detected above its corresponding MCL, or in the case of VOCs without a MCL, its EPA residential risk-based concentration (RBC) with a hazard index (HI) of 0.1.

RFI Groundwater Sampling at SWMUs 197 and 198

On March 18, 2004, two temporary groundwater sampling locations or Geoprobe points were advanced at SWMUs 197 and 198 using DPT to investigate the surficial aquifer for potential releases to the saturated zone. Each DPT pair consisted of an upgradient and downgradient point. These DPT locations are depicted in Figure 3-1. Two groundwater samples at each Geoprobe point were collected through a 2-foot screen at intervals of 6 to 8 ft bls and 13 to 15 ft bls. The 6 to 8-foot sample collection interval represents the top of the groundwater table. All groundwater samples were analyzed for VOCs (EPA Method 8260B), SVOCs (EPA Method 8270), and metals (EPA Method 6010B).

Because the samples were collected using direct-push methods, the samples intended for metals analysis should have been field-filtered using a 0.45-micron filter before being preserved and sent for analysis. However, these samples were not field-filtered. Previous unfiltered groundwater samples collected at the CNC have been found to be unrepresentative of water quality due to elevated turbidity; consequently the groundwater samples collected for metals analysis during this RFI effort were not considered representative of actual groundwater quality. The results for the DPT groundwater metals are presented and screened in Section 4.0 of this report.

In addition, two new permanent monitoring wells, one at SWMU 197 and one at SWMU 198, were subsequently installed and sampled for metals to better assess groundwater quality at the site. The wells were installed to a depth of approximately 15 ft bls. Well construction diagrams and development logs are presented in Appendix D. The results of groundwater samples collected from these wells and analyzed for metals are presented in Section 4.0. The locations of these wells are shown on Figure 3-2.

3.4 Data Analysis and Screening

Screening of analytical data (except groundwater metals data, as noted above) was conducted by a qualified chemist at CH2M-Jones following validation of the analytical results by the offsite laboratory. Detected chemical concentrations in soil and groundwater samples were screened using chemicals of potential concern (COPCs) screening criteria currently used by the CNC BRAC Cleanup Team (BCT).

A full evaluation and presentation of COPC screening against current criteria, as well as the COPC analysis, is presented in Section 4.0 of this RFI Report.

3.5 Sample Collection and Analyses Procedures and Methodology

3.5.1 Sample Collection

The field and laboratory work conducted as part of the SWMUs 197 and 198 RFI was performed in accordance with the requirements of the CNC Comprehensive Sampling and Analysis Plan (CSAP) (EnSafe/Allen & Hoshall, 1996) and the EPA *Environmental Services Division Standard Operating Procedures and Quality Assurance Manual* (ESDSOPQAM, 2001).

The overall data quality objectives (DQOs) for the RFI are EPA DQO Level III for contaminant identification and quantification. Required field and laboratory quality assurance/quality control (QA/QC) samples were collected as required by the CSAP. Subcontractor data were validated by the CH2M-Jones project chemist prior to final interpretation and submittal.

Upon completion of sampling, soil borings were filled to the land surface, in accordance with Rule 61-71.10.B of the South Carolina Well Standards and Regulations. Soil borings, temporary groundwater data points, and well locations were surveyed by a registered surveyor to establish horizontal location coordinates (and vertical elevations relative to msl for monitoring wells). The soil sample collection and equipment decontamination procedures conformed to the procedures described in the CSAP portion of the CNC RFI Work Plan (EnSafe/Allen & Hoshall, 1994).

3.5.2 Sample Analyses

Samples were delivered to a subcontracted laboratory for chemical analysis by EPA methods and/or standard operating procedures (SOPs) for screening methods to achieve Level III EPA DQOs. The subcontracted laboratory is required to meet the EPA DQO Level

III criteria specified in the approved CNC CSAP (EnSafe/Allen & Hoshall, 1996). Sample analysis was performed in accordance with the guidance in EPA's *Test Methods for Evaluating Solid Waste, SW-846, Revision 4* (1996), Office of Solid Waste and Emergency Response (OSWER) and in the EPA Environmental Services Division *Laboratory Operations and Quality Control Manual* (ESDLOQCM) (1997).

3.6 SCDHEC Well Installation Request

In accordance with Rule R.61-79.265 Subpart F of the South Carolina Hazardous Waste Management Regulations and R.61-71 of the South Carolina Well Standards and Regulations, a request for the advancement of the Geoprobe points was submitted to SCDHEC on March 9, 2004. The written request outlined the purpose of the investigation activity at SWMUs 197 and 198 and presented the well construction details, a map showing the proposed locations, and proposed abandonment techniques. SCDHEC provided written approval of the March 9, 2004 request the same day. A subsequent request for installation of the monitoring wells was also submitted and approved by SCDHEC.

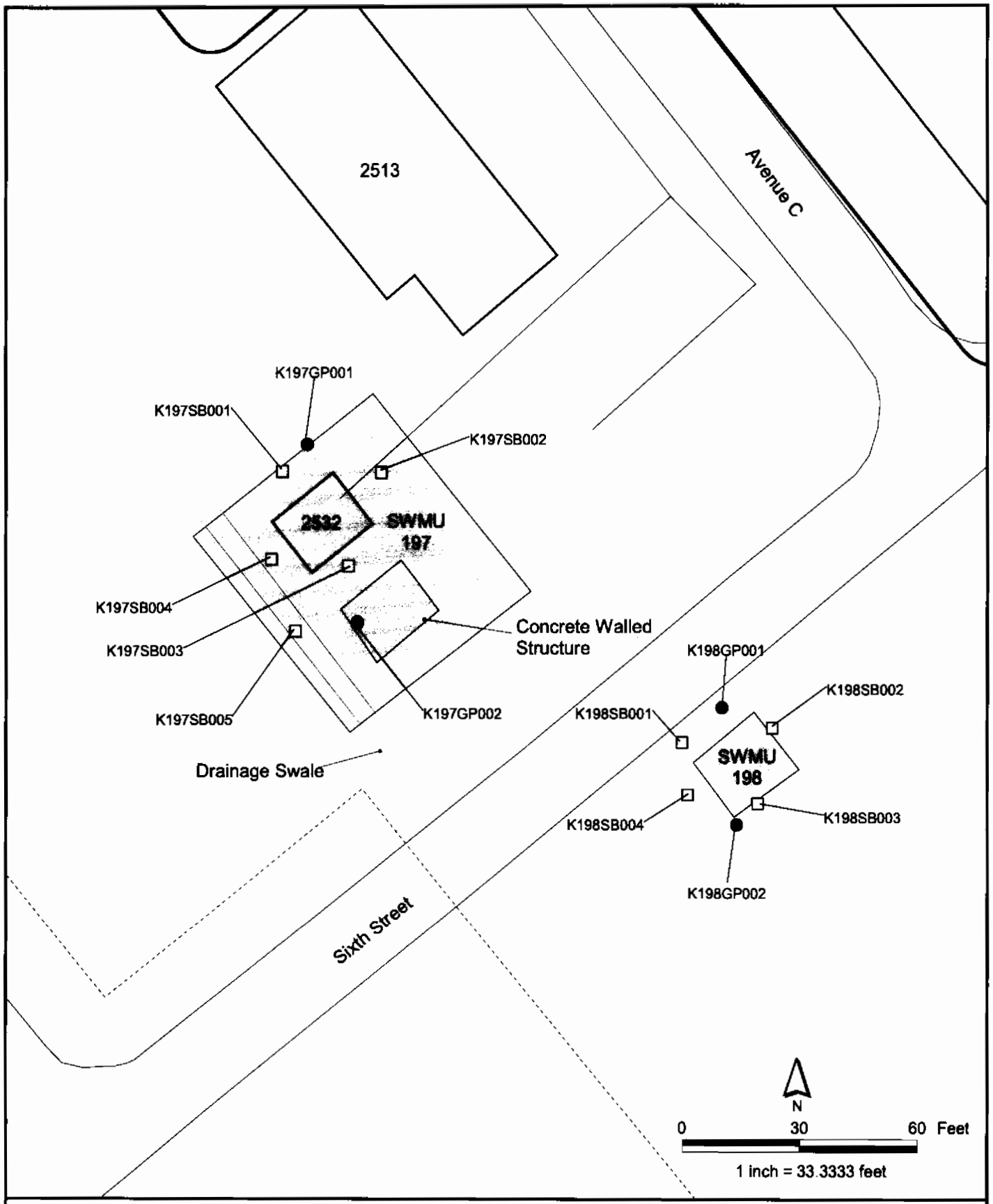

Fence
Roads
Sewer Line
Drainage Swale
Buildings
Surface (0-1 ft BLS) and Subsurface Soil Sample (3-5 ft BLS)
Groundwater Probe
SWMU 197 & 198 Boundary
SWMU Boundary

Figure 3-1
RFI Sample Locations
SWMUs 197 and 198
Zone K
Charleston Naval Complex

Note: Location of SWMUs 197 and 198 are approximate

CH2MHILL

File Path: C:\16gis\Projects\Zone_K\SWMU_197_198\APRs\swmu197&198.apr, Date: 27 Jul 2004 10:36, User: ASPOSATO, Figure 3-1 RFI Sample Locations

NOTE: Original figure created in color

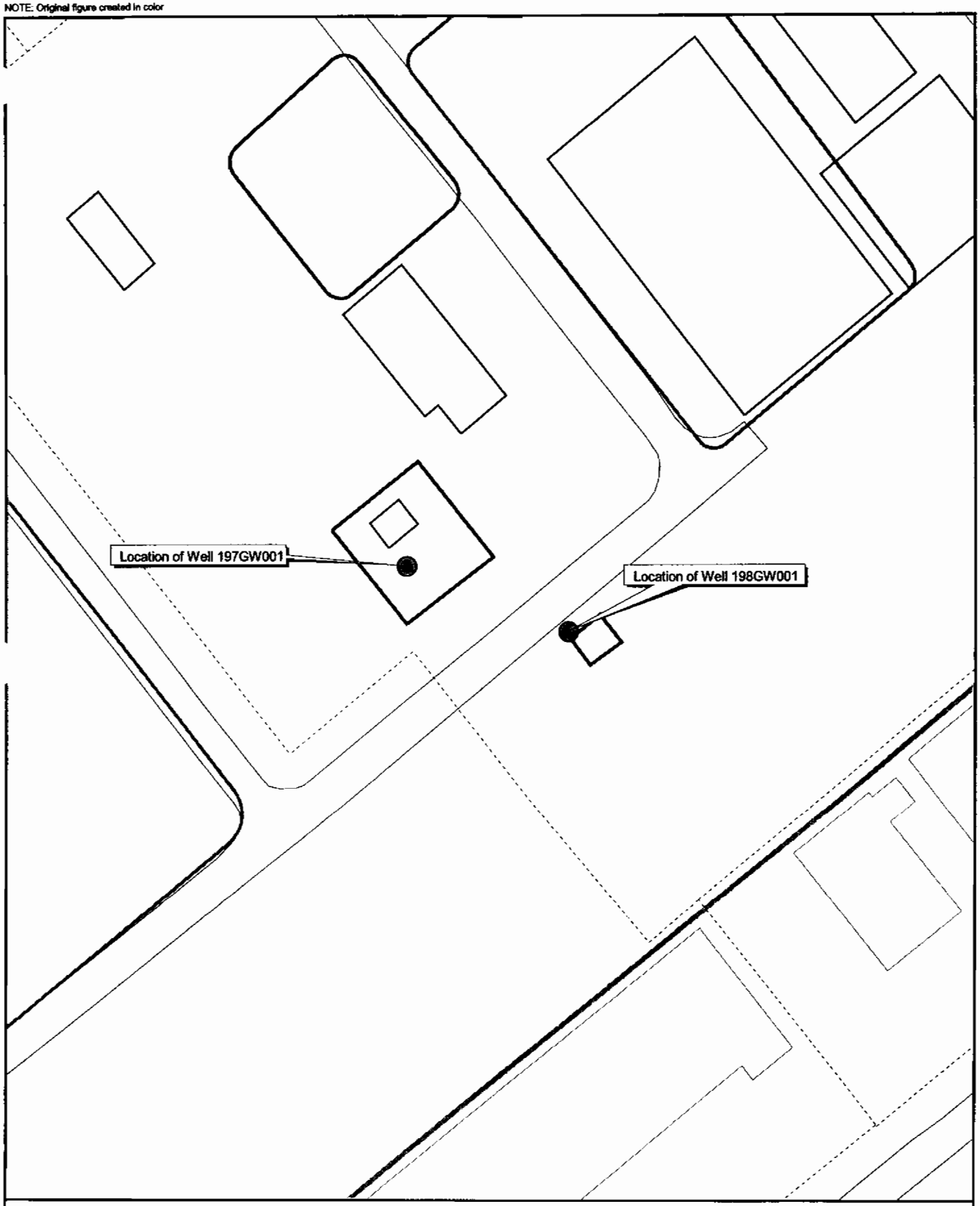

N

0 50 100 Feet

1 inch = 69.0765 feet

Figure 3-2
Location of New Monitoring Wells
SWMUs 197 and 198
Charleston Naval Complex

Section 4.0

4.0 Summary of RFI Results for SWMUs 197 and 198

4.1 Soil Results

4.1.1 Surface Soil Results

The analytical results from surface soil samples were compared to EPA Region III residential RBCs, soil screening levels (SSLs) (based on dilution attenuation factor [DAF] of 1 for VOCs and 10 for other chemicals), and the Zone K range of background concentrations (inorganics). Carcinogenic PAHs (cPAHs) were also compared to the base-wide background concentration developed for the Naval Station Annex (CH2M-Jones, 2001a). An individual constituent was identified as a COPC if its detected concentration was above its background concentration and above either the RBC or SSL, or both. This section presents the results of this comparison. A summary of the chemicals detected in surface soil is presented in Table 4-1. The complete analytical results are presented in Appendix B, with data validation summaries for the data included as Appendix C.

Seven inorganic chemicals were detected in surface soil samples collected at SWMUs 197 and 198. Only chromium was detected at a concentration that exceeded its Zone K background concentrations, RBC, and SSLs in one sample. Chromium was detected above its screening criteria in the sample collected at soil boring K197SB003 (30.5 milligrams per kilogram [mg/kg]). It should be noted that the chromium screening criteria (RBC and SSL) are based on the hexavalent chromium species (Cr^{+6}). The trivalent species (Cr^{+3}), which is more abundant and stable, has a RBC (HI = 0.1) of 12,000 mg/kg, and is not considered by EPA to be a migration threat to shallow groundwater. Because no data exist to determine the species of chromium present at the site, the more conservative screening criterion was used, though it is more likely that chromium is present primarily in its trivalent form in site soil.

Three VOCs were detected in surface soil samples collected at SWMUs 197 and 198. None of the detected concentrations exceeded their respective screening criteria.

Eight SVOCs were detected in surface soil samples collected at SWMUs 197 and 198. One compound, benzo(a)pyrene, was detected above its residential screening criterion and its background concentration in two samples (K197SB001 and K197SB004). The calculated

benzo(a)pyrene equivalent (BEQ) concentration for both samples was also above the background concentration (CH2M-Jones, 2001a). Therefore, BEQs were identified as COPCs.

Two PCBs were detected in surface soil samples collected at SWMUs 197 and 198. None of the detected concentrations exceeded available screening criteria.

Based on the screening process outlined in this section, chromium was identified as a COPC in surface soil at SWMU 197.

4.1.2 Subsurface Soil Results

The analytical results from subsurface soil samples were compared to SSLs (based on DAF of 1 for VOCs and 10 for other chemicals) and the Zone K range of background concentrations (inorganics). cPAHs were also compared to the base-wide background concentration developed for the Naval Station Annex (CH2M-Jones, 2001a). An individual constituent was identified as a COPC if its detected concentration was above its background concentration and above its SSL. This section presents the results of this comparison. A summary of the chemicals detected in subsurface soil is presented in Table 4-2. The complete analytical results are presented in Appendix B, with data validation summaries for the data included as Appendix C.

Seven inorganic chemicals were detected in subsurface soil samples collected at SWMUs 197 and 198. None of the detected metals were detected at concentrations that exceed their respective Zone K background concentrations and SSLs. Therefore, no metals were identified as COPCs.

Two VOCs were detected in subsurface soil samples collected at SWMUs 197 and 198. None of the detected concentrations exceeded their respective screening criteria.

Fourteen SVOCs were detected in subsurface soil samples collected at SWMUs 197 and 198. One compound, pentachlorophenol, was detected above its SSL in one sample (K198SB002) and was identified as a COPC on this basis.

Two PCBs were detected in one subsurface soil sample collected at SWMUs 197 and 198. None of the detected concentrations exceeded their respective SSLs.

Based on the screening process outlined in this section, pentachlorophenol (PCP) was identified as a COPC in subsurface soil at SWMU 198.

4.2 Groundwater Investigation

Groundwater samples were collected at two locations at each site using DPT methods. Samples were collected at depths of 6 to 8 ft bls and 13 to 15 ft bls in accordance with the RFI Work Plan. Table 4-3 presents the detected organic compounds.

4.2.1 Groundwater Sampling and Analysis

Groundwater samples collected at SWMUs 197 and 198 were analyzed for VOCs, SVOCs, and RCRA metals. A summary of detected organic chemicals from the RFI groundwater sampling is presented in Table 4-3. Groundwater samples were also subsequently collected from the two new monitoring wells and analyzed for metals. Results for these samples are presented in Table 4-4.

4.2.2 Groundwater Sampling Results

Table 4-3 presents a summary of the detected chemicals in groundwater samples collected using DPT methods at SWMUs 197 and 198. The complete analytical results are presented in Appendix B, with data validation summaries for the data included as Appendix C. The analytical results were compared to EPA Primary Drinking Water MCLs or to EPA Region III Tap Water RBCs if no MCL was available.

One VOC, TCE, was detected in one groundwater sample (K197GP001) at SWMU 197. The detected concentration was below the MCL. Therefore, no VOCs were identified as COPCs at SWMUs 197 and 198.

No SVOCs were detected in groundwater samples from SWMUs 197 and 198.

Arsenic, chromium, and lead were detected in several of the DPT samples at concentrations above their respective MCLs (See Table 4-3). DPT samples generally contain significant suspended solids, which usually results in elevated metals concentrations. Therefore, two new monitoring wells were installed, one at SWMU 197 and SWMU 198, to allow collection and analysis of groundwater samples for metals analysis.

The results of groundwater samples collected from the new monitoring wells are presented in Table 4-4. None of the metals in these groundwater samples exceeded their respective MCLs. Thus, metals in groundwater do not appear to be present at significant concentrations at the site. The detection of elevated metals in the DPT samples can be concluded to be likely caused by turbidity.

Based on the screening process outlined in this section, COPCs were not identified for groundwater at SWMUs 197 and 198 based on the RFI sample results.

4.3 COPC Summary

Based on the screening process outlined in this section, chromium and BEQs were identified as COPCs in surface soil at SWMU 197. PCP was identified as a COPC in subsurface soil at SWMU 198.

COPCs were not identified in groundwater at either SWMU 197 or SWMU 198.

TABLE 4-1
Chemicals Detected in Surface Soil
SWMUs 197 and 198, Zone K, Charleston Naval Complex

Chemical	Station ID	Sample ID	Date Collected	Result (mg/kg)	Qualifier	EPA Region III RBC[a] (HI=0.1)	SSL[b] (DAF=10)	Zone K Background Concentration[c]
Metals								
Arsenic	K198SB004	198SB00401	05/13/2004	7.14	=	0.43	14.5	52 [d]
	K198SB002	198SB00201	05/13/2004	6.22	=			
	K198SB001	198SB00101	05/13/2004	6.08	=			
	K197SB005	197SB00501	05/13/2004	3.7	=			
	K197SB003	197SB00301	05/13/2004	3.28	=			
	K197SB001	197SB00101	05/13/2004	3.2	=			
	K198SB003	198SB00301	05/13/2004	2.83	=			
	K197SB002	197SB00201	05/13/2004	2.56	=			
	K197SB004	197SB00401	05/13/2004	2.27	=			
Barium	K197SB004	197SB00401	05/13/2004	27.6	J	550	800	20
	K197SB001	197SB00101	05/13/2004	25.8	J			
	K197SB003	197SB00301	05/13/2004	18.4	J			
	K198SB004	198SB00401	05/13/2004	18	J			
	K197SB005	197SB00501	05/13/2004	16.1	J			
	K198SB002	198SB00201	05/13/2004	15.7	J			
	K198SB003	198SB00301	05/13/2004	15	J			
	K197SB002	197SB00201	05/13/2004	14.1	J			
Cadmium	K197SB003	197SB00301	05/13/2004	3.49	=	8	4	0.08
	K197SB002	197SB00201	05/13/2004	3.47	=			
	K197SB004	197SB00401	05/13/2004	0.899	J			
	K198SB004	198SB00401	05/13/2004	0.887	J			
	K198SB001	198SB00101	05/13/2004	0.656	J			
	K197SB005	197SB00501	05/13/2004	0.344	J			
	K198SB002	198SB00201	05/13/2004	0.284	J			
	K197SB001	197SB00101	05/13/2004	0.224	J			
	K198SB003	198SB00301	05/13/2004	0.19	J			
Chromium, Total	K197SB003	197SB00301	05/13/2004	**30.5**	=	23 [e]	19 [e]	6.3
	K197SB005	197SB00501	05/13/2004	12.8	=			

TABLE 4-1
Chemicals Detected in Surface Soil
SWMUs 197 and 198, Zone K, Charleston Naval Complex

Chemical	Station ID	Sample ID	Date Collected	Result (mg/kg)	Qualifier	EPA Region III RBC[a] (HI=0.1)	SSL[b] (DAF=10)	Zone K Background Concentration[c]
	K197SB004	197SB00401	05/13/2004	9.64	=			
	K197SB001	197SB00101	05/13/2004	9.47	=			
	K198SB004	198SB00401	05/13/2004	8.18	=			
	K198SB002	198SB00201	05/13/2004	7.72	=			
	K198SB001	198SB00101	05/13/2004	7.62	=			
	K197SB002	197SB00201	05/13/2004	7.43	=			
	K198SB003	198SB00301	05/13/2004	5.82	=			
Lead	K197SB003	197SB00301	05/13/2004	197	=	400	400	259
	K197SB002	197SB00201	05/13/2004	138	=			
	K197SB004	197SB00401	05/13/2004	69.8	=			
	K197SB005	197SB00501	05/13/2004	65.2	=			
	K197SB001	197SB00101	05/13/2004	41.9	=			
	K198SB004	198SB00401	05/13/2004	36.7	=			
	K198SB003	198SB00301	05/13/2004	21.6	=			
	K198SB002	198SB00201	05/13/2004	17.4	=			
	K198SB001	198SB00101	05/13/2004	11.6	=			
Mercury	K197SB005	197SB00501	05/13/2004	0.095	J	2.3[f]	1	NA
	K197SB002	197SB00201	05/13/2004	0.06	J			
	K197SB004	197SB00401	05/13/2004	0.051	J			
	K198SB001	198SB00101	05/13/2004	0.045	J			
	K198SB003	198SB00301	05/13/2004	0.044	J			
	K198SB002	198SB00201	05/13/2004	0.043	J			
	K197SB001	197SB00101	05/13/2004	0.038	J			
	K198SB004	198SB00401	05/13/2004	0.037	J			
	K197SB003	197SB00301	05/13/2004	0.005	J			
Selenium	K197SB003	197SB00301	05/13/2004	0.589	J	39	2.5	0.71
	K198SB002	198SB00201	05/13/2004	0.521	J			
	K198SB003	198SB00301	05/13/2004	0.431	J			

TABLE 4-1
Chemicals Detected in Surface Soil
SWMUs 197 and 198, Zone K, Charleston Naval Complex

Chemical	Station ID	Sample ID	Date Collected	Result (mg/kg)	Qualifier	EPA Region III RBC[a] (HI=0.1)	SSL[b] (DAF=10)	Zone K Background Concentration[c]
Volatile Organic Compounds								
1,1-Dichloroethene	K197SB004	197SB00401	05/13/2004	0.0024	J	1.1	0.003	NA
Acetone	K197SB001	197SB00101	05/13/2004	0.0325	J	780	0.8	NA
	K197SB005	197SB00501	05/13/2004	0.0225	J			
	K198SB004	198SB00401	05/13/2004	0.0188	J			
	K198SB003	198SB00301	05/13/2004	0.018	J			
	K197SB002	197SB00201	05/13/2004	0.0133	J			
	K197SB004	197SB00401	05/13/2004	0.0124	J			
	K198SB002	198SB00201	05/13/2004	0.011	J			
	K198SB001	198SB00101	05/13/2004	0.0055	J			
Tetrachloroethylene (PCE)	K197SB002	197SB00201	05/13/2004	0.00099	J	58	0.003	NA
Semivolatile Organic Compounds								
Benzo(a)pyrene	K197SB004	197SB00401	05/13/2004	**0.0977**	J	0.087	4	0.037[d]
	K197SB001	197SB00101	05/13/2004	**0.0964**	J			
Benzo(b)fluoranthene	K197SB001	197SB00101	05/13/2004	0.0297	J	0.87	2.5	0.0036[d]
Benzo(k)fluoranthene	K197SB004	197SB00401	05/13/2004	0.0331	J	8.7	24.5	0.0004[d]
Carbazole	K197SB004	197SB00401	05/13/2004	0.029	J	32	0.3	NA
Di-n-butyl Phthalate	K197SB004	197SB00401	05/13/2004	0.0297	J	780	1150	NA
	K198SB004	198SB00401	05/13/2004	0.0258	J			
Fluoranthene	K197SB004	197SB00401	05/13/2004	0.0263	J	310	2150	NA
	K197SB001	197SB00101	05/13/2004	0.0245	J			
	K197SB005	197SB00501	05/13/2004	0.0192	J			
Indeno(1,2,3-c,d)pyrene	K197SB004	197SB00401	05/13/2004	0.0509	J	0.87	7	0.0038[d]
	K197SB001	197SB00101	05/13/2004	0.047	J			
Pyrene	K197SB004	197SB00401	05/13/2004	0.0315	J	230	2100	NA
	K197SB001	197SB00101	05/13/2004	0.0182	J			
BEQs	K197SB004	197SB00401	05/13/2004	**0.316**	J	0.087	4	0.086[d]
	K197SB001	197SB00101	05/13/2004	**0.302**	J			

TABLE 4-1
Chemicals Detected in Surface Soil
SWMUs 197 and 198, Zone K, Charleston Naval Complex

Chemical	Station ID	Sample ID	Date Collected	Result (mg/kg)	Qualifier	EPA Region III RBC[a] (HI=0.1)	SSL[b] (DAF=10)	Zone K Background Concentration[c]
Polychlorinated Biphenyls								
PCB-1254 (Aroclor 1254)	K198SB004	198SB00401	05/13/2004	0.0406	J	0.32	1	NA
	K198SB001	198SB00101	05/13/2004	0.011	J			
PCB-1260 (Aroclor 1260)	K198SB004	198SB00401	05/13/2004	0.0142	J	0.32	1	NA
	K198SB001	198SB00101	05/13/2004	0.0075	J			
	K198SB002	198SB00201	05/13/2004	0.0044	J			

[a] Residential risk-based concentration (RBC) from the U.S. EPA Region III RBC table (10/2000), based on a hazard index (HI) of 0.1 for non-carcinogenic chemicals.
[b] U.S. EPA Soil Screening Guidance: Technical Background Document (5/1996) based on a dilution attenuation factor (DAF) of 10 (1 for VOCs).
[c] Project Team Notebook and Instructions, Charleston Naval Complex, Environmental Restoration Project. Revision 1A (CH2M-Jones, 2001b)
[d] Results from Additional Background Sampling of the CNC Railroad Lines and Naval Station Annex (Zone K) (CH2M-Jones, 2001).
[e] Chromium criteria is based on the hexavalent (Cr^{+6}) species.
[f] Mercuric chloride screening criterion.
EN - Essential nutrient.
NA - Not applicable or not available.
J indicates that the chemical was detected. The reported concentration is estimated.
= indicates that the chemical was detected. The reported value is the measured concentration.

Bold and boxed values exceed either RBC and/or the SSL, <u>and</u> the Zone K Background Concentration (inorganics and BEQs).

TABLE 4-2
Chemicals Detected in Subsurface Soil
SWMUs 197 and 198, Zone K, Charleston Naval Complex

Chemical	Station ID	Sample ID	Date Collected	Result (mg/kg)	Qualifier	SSL[a] (DAF=10)	Zone K Background Concentration[b]
Metals							
Arsenic	K198SB003	198SB00302	05/13/2004	10	=	14.5	4.4 c
	K197SB001	197SB00102	05/13/2004	2.14	J		
	K197SB005	197SB00502	05/13/2004	1.78	J		
	K198SB001	198SB00102	05/13/2004	1.72	J		
	K197SB003	197SB00302	05/13/2004	1.64	J		
	K197SB004	197SB00402	05/13/2004	1.41	J		
	K198SB004	198CB00402	05/13/2004	1.37	J		
	K197SB002	197SB00202	05/13/2004	1.3	J		
	K198SB002	198SB00202	05/13/2004	0.923	J		
	K198SB004	198SB00402	05/13/2004	0.842	J		
Barium	K197SB005	197SB00502	05/13/2004	20.3	J	800	7.2
	K197SB004	197SB00402	05/13/2004	12.7	J		
Cadmium	K197SB003	197SB00302	05/13/2004	0.484	J	4	NA
	K198SB003	198SB00302	05/13/2004	0.328	J		
Chromium, Total	K197SB005	197SB00502	05/13/2004	13	=	19 d	8.5
	K197SB003	197SB00302	05/13/2004	10	=		
	K198SB001	198SB00102	05/13/2004	8.78	=		
	K197SB002	197SB00202	05/13/2004	7.16	=		
	K197SB004	197SB00402	05/13/2004	6.89	=		
	K198SB004	198CB00402	05/13/2004	6.48	=		
	K197SB001	197SB00102	05/13/2004	6.34	=		
	K198SB004	198SB00402	05/13/2004	5.92	=		
	K198SB002	198SB00202	05/13/2004	4.59	=		
	K198SB003	198SB00302	05/13/2004	3.88	=		
Lead	K197SB003	197SB00302	05/13/2004	21	=	400	4.4
	K197SB005	197SB00502	05/13/2004	9.01	=		
	K197SB002	197SB00202	05/13/2004	8.73	=		

TABLE 4-2
Chemicals Detected in Subsurface Soil
SWMUs 197 and 198, Zone K, Charleston Naval Complex

Chemical	Station ID	Sample ID	Date Collected	Result (mg/kg)	Qualifier	SSL[a] (DAF=10)	Zone K Background Concentration[b]
	K197SB004	197SB00402	05/13/2004	8.32	=		
	K197SB001	197SB00102	05/13/2004	6.62	=		
	K198SB001	198SB00102	05/13/2004	4.34	=		
	K198SB004	198CB00402	05/13/2004	3.89	=		
	K198SB004	198SB00402	05/13/2004	3.56	=		
	K198SB003	198SB00302	05/13/2004	2.97	=		
	K198SB002	198SB00202	05/13/2004	2.42	=		
Mercury	K197SB005	197SB00502	05/13/2004	0.034	J	1	NA
	K198SB003	198SB00302	05/13/2004	0.033	J		
	K197SB001	197SB00102	05/13/2004	0.027	J		
	K197SB004	197SB00402	05/13/2004	0.027	J		
	K197SB003	197SB00302	05/13/2004	0.023	J		
	K197SB002	197SB00202	05/13/2004	0.016	J		
	K198SB004	198CB00402	05/13/2004	0.011	J		
	K198SB001	198SB00102	05/13/2004	0.009	J		
	K198SB004	198SB00402	05/13/2004	0.009	J		
	K198SB002	198SB00202	05/13/2004	0.005	J		
Selenium	K198SB001	198SB00102	05/13/2004	1.22	=	2.5	0.51
	K197SB002	197SB00202	05/13/2004	1.2	=		
	K197SB003	197SB00302	05/13/2004	0.467	J		
Volatile Organic Compounds							
1,1-Dichloroethene	K198SB003	198SB00302	05/13/2004	0.00067	J	0.003	NA
Tetrachloroethylene (PCE)	K197SB002	197SB00202	05/13/2004	0.0013	J	0.003	NA
Semivolatile Organic Compounds							
Acenaphthylene	K198SB002	198SB00202	05/13/2004	0.0331	J	285 e	NA
	K197SB002	197SB00202	05/13/2004	0.0192	J		
Benzo(a)anthracene	K198SB002	198SB00202	05/13/2004	0.122	J	1	0.004 c
Benzo(a)pyrene	K198SB002	198SB00202	05/13/2004	0.198	J	4	0.0397 c
Benzo(b)fluoranthene	K198SB002	198SB00202	05/13/2004	0.319	J	2.5	0.004 c

TABLE 4-2
Chemicals Detected in Subsurface Soil
SWMUs 197 and 198, Zone K, Charleston Naval Complex

Chemical	Station ID	Sample ID	Date Collected	Result (mg/kg)	Qualifier	SSL[a] (DAF=10)	Zone K Background Concentration[b]
	K197SB003	197SB00302	05/13/2004	0.02	J		
Benzo(g,h,i)perylene	K198SB002	198SB00202	05/13/2004	0.082	J	4 f	NA
Benzoic acid	K197SB002	197SB00202	05/13/2004	0.389	J	200	NA
Carbazole	K198SB002	198SB00202	05/13/2004	0.0257	J	0.3	NA
Chrysene	K198SB002	198SB00202	05/13/2004	0.254	J	80	0.00004 c
Di-n-butyl Phthalate	K198SB001	198SB00102	05/13/2004	0.0414	J	1150	NA
	K198SB002	198SB00202	05/13/2004	0.0316	J		
Fluoranthene	K198SB002	198SB00202	05/13/2004	0.538	=	2150	NA
	K197SB003	197SB00302	05/13/2004	0.0372	J		
Indeno(1,2,3-c,d)pyrene	K198SB002	198SB00202	05/13/2004	0.127	J	7	0.004 c
Pentachlorophenol	K198SB002	198SB00202	05/13/2004	**0.186**	J	0.015	NA
Phenanthrene	K198SB002	198SB00202	05/13/2004	0.106	J	6000 g	NA
Pyrene	K198SB002	198SB00202	05/13/2004	0.473	=	2100	NA
	K198SB001	198SB00102	05/13/2004	0.0654	J		
	K197SB003	197SB00302	05/13/2004	0.03	J		
BEQs	K198SB002	198SB00202	05/13/2004	0.435	J	4	0.092 c
	K197SB003	197SB00302	05/13/2004	0.399	J		
Polychlorinated Biphenyls							
PCB-1254 (Aroclor 1254)	K198SB001	198SB00102	05/13/2004	0.0096	J	1	NA
PCB-1260 (Aroclor 1260)	K198SB001	198SB00102	05/13/2004	0.0037	J	1	NA

[a] U.S. EPA Soil Screening Guidance: Technical Background Document (5/1996) based on a dilution attenuation factor (DAF) of 10 (1 for VOCs).
[b] Project Team Notebook and Instructions, Charleston Naval Complex, Environmental Restoration Project. Revision 1A (CH2M-Jones, 2001b)
[c] Results from Additional Background Sampling of the CNC Railroad Lines and Naval Station Annex (Zone K) (CH2M-Jones, 2001).
[d] Chromium criteria is based on the hexavalent (Cr^{+6}) species.
[e] Acenaphthene used as a surrogate.
[f] Pyrene used as a surrogate.
[g] Anthracene used as a surrogate (isometric).
NA - Not applicable or not available.
J indicates that the chemical was detected. The reported concentration is estimated.
= indicates that the chemical was detected. The reported value is the measured concentration.
Bold and boxed values exceed either RBC and/or the SSL, and the Zone K Background Concentration (inorganics and BEQs).

TABLE 4-3
Results for Unfiltered Groundwater Samples Collected Using Geoprobe at SWMUs 197/198
SWMUs 197 and 198, Zone K, Charleston Naval Complex

Sample ID	Parameter	Result (µg/L)	Qualifier	MCL
197GP00108	Barium	15.9	J	2,000
197GP00108	Chromium, Total	6.24	J	100
197GP00115	Arsenic	6.98	J	10
197GP00115	Barium	508	J	2,000
197GP00115	Chromium, Total	**387**	=	100
197GP00115	Lead	**56.4**	=	15
197GP00115	Trichloroethylene (TCE)	1.3	J	5
197GP00208	Arsenic	**38.3**	=	10
197GP00208	Barium	1,410	J	2,000
197GP00208	Chromium, Total	**1,160**	=	100
197GP00208	Lead	**309**	=	15
197GP00208	Selenium	22.4	=	50
197GP00208	Mercury	0.633	=	2
198GP00108	Barium	98.8	J	2,000
198GP00108	Chromium, Total	92.5	=	100
198GP00108	Lead	**22.6**	=	15
198GP00115	Arsenic	3.7	J	10
198GP00115	Barium	778	J	2,000
198GP00115	Chromium, Total	**430**	=	100
198GP00115	Lead	**53.2**	=	15
198GP00115	Mercury	0.114	J	2
198GP00208	Arsenic	**36.3**	J	10
198GP00208	Barium	1,870	J	2,000
198GP00208	Chromium, Total	**764**	=	100
198GP00208	Lead	**225**	=	15
198GP00208	Mercury	0.688	=	2
198GP00215	Arsenic	**36.7**	=	10

TABLE 4-3
Results for Unfiltered Groundwater Samples Collected Using Geoprobe at SWMUs 197/198
SWMUs 197 and 198, Zone K, Charleston Naval Complex

Sample ID	Parameter	Result (µg/L)	Qualifier	MCL
198GP00215	Barium	1,760	J	2,000
198GP00215	Chromium, Total	**640**	=	100
198GP00215	Lead	**206**	=	15
198GP00215	Mercury	0.726	=	2

µg/L Micrograms per liter

MCL Maximum contaminant level

= Indicates that the chemical was detected. The reported value is the measured concentration.

J Indicates that the chemical was detected. The reported concentration is estimated.

Bold and boxed values exceed the EPA Primary Drinking Water MCL.

TABLE 4-4
Results of Metals Analysis for Groundwater Samples in New Wells at SWMU 197 and 198
SWMUs 197 and 198, Zone K, Charleston Naval Complex

Station ID	Parameter	Concentration (µg/L)	Qualifier	MCL	EPA Region III Tap Water RBC
H197GP002	Arsenic, Dissolved	5	U	10	
H197GP002	Barium, Dissolved	19.8	J	2,000	
H197GP002	Cadmium, Dissolved	1	U	5	
H197GP002	Chromium, Dissolved	2	U	100	
H197GP002	Lead, Dissolved	4	U	15	
H197GP002	Mercury, Dissolved	0.033	U	2	
H197GP002	Selenium, Dissolved	11	U	50	
H197GP002	Silver, Dissolved	2	U	NA	180
H197GP002	Arsenic	5	U	10	
H197GP002	Barium	22.4	J	2,000	
H197GP002	Cadmium	1	U	5	
H197GP002	Chromium, Total	2	U	100	
H197GP002	Lead	4	U	15	
H197GP002	Mercury	0.033	U	2	
H197GP002	Selenium	11	U	50	
H197GP002	Silver	2	U	NA	180
H198GP002	Arsenic, Dissolved	5	U	10	
H198GP002	Barium, Dissolved	5.9	J	2,000	
H198GP002	Cadmium, Dissolved	1	U	5	
H198GP002	Chromium, Dissolved	2	U	100	
H198GP002	Lead, Dissolved	4	J	15	
H198GP002	Mercury, Dissolved	0.033	U	2	
H198GP002	Selenium, Dissolved	11	U	50	
H198GP002	Silver, Dissolved	2	U	NA	180
H198GP002	Arsenic	5	U	10	
H198GP002	Barium	33	J	2,000	
H198GP002	Cadmium	1	U	5	
H198GP002	Chromium, Total	2	U	100	
H198GP002	Lead	4	U	15	
H198GP002	Mercury	0.033	U	2	

TABLE 4-4
Results of Metals Analysis for Groundwater Samples in New Wells at SWMU 197 and 198
SWMUs 197 and 198, Zone K, Charleston Naval Complex

Station ID	Parameter	Concentration (µg/L)	Qualifier	MCL	EPA Region III Tap Water RBC
H198GP002	Selenium	11	U	50	
H198GP002	Silver	2	U	NA	180

J Indicates that the chemical was detected. The reported concentration is estimated.
µg/L Micrograms per liter
MCL Maximum contaminant level
NA Not applicable
RBC Risk-based concentration
U Indicates that the chemical was analyzed for but not detected above the method detection limit.

5.0 Risk Assessment

This section discusses COPCs that were identified for SWMUs 197 and 198. Below is a summary of the COPCs that were identified in site surface soil and groundwater as discussed in Section 4.0.

Surface Soil COPCs	Subsurface Soil COPCs
BEQs	Pentachlorophenol
Chromium	

5.1 Surface Soil COPCs

There were two surface soil COPCs: 1) BEQ, which is a carcinogen, and 2) chromium, which is a non-carcinogen. Therefore, these two chemicals are included for simple risk assessment as described below.

5.1.1 Benzo(a)pyrene Equivalents

The BEQs were calculated from the PAHs detected in surface soil samples. The BEQs were above background levels in two samples, K197SB001 and K197SB004, at 0.302 mg/kg and 0.316 mg/kg compared to the Zone K background value of 0.086 mg/kg and the residential RBC of 0.087 mg/kg. However, the detected BEQ levels are below the method detection limit of 0.330 mg/kg for PAHs. Also, of the seven cPAHs, only benzo(a)pyrene exceeded, by a slight amount, its individual RBC value. Most of the contributions to the estimated BEQ value was due to the half the detection limit values for non-detected cPAHs.

The potential carcinogenic risks to human receptors from exposure to the BEQs are estimated using a simple approach, where the BEQ concentration from each sample is divided by the preliminary remediation goal (PRG) value and multiplied by a 10^{-6} value to estimate the potential carcinogenic risks, as included in the table:

Chemical	Sample ID	Concentration (mg/kg)	Industrial RBC (mg/kg)	Residential RBC (mg/kg)	Industrial Risk	Residential Risk
BEQs	K197SB001	0.302	0.290	0.087	1.04E-6	3.47E-6
	K197SB004	0.316	0.290	0.087	1.08E-6	3.6E-6

The potential risk from exposure to the detected BEQs is slightly above the 1 in 1 million risk level for both industrial and residential land use; however, it is well within the acceptable risk range of 1 to 100 in a million. There are no other carcinogenic COPCs identified in site surface soils. Therefore, the potential risks from PAHs in surface soil are considered acceptable. NFAs are recommended for surface soils to address BEQs at this site.

5.1.2 Chromium

Chromium was detected above screening criteria in one out of nine surface soil samples. Though hexavalent chromium is considered a carcinogen by the inhalation exposure pathway, it is not a carcinogen by oral and dermal exposure routes.Subsurface soil from the same location where the surface soil sample indicated an exceedance of the screening criteria, as well as the other eight subsurface soil sample locations did not indicate elevated chromium, indicating that downward leaching is not occurring. No data indicate that hexavalent chromium was used at SWMUs 197 and 198. Because of this and the lack of leaching, it is reasonable to assume that site chromium is most likely primarily in the common trivalent form and not in the more mobile hexavalent form.

Based on the single occurrence of chromium above the screening criteria, chromium was retained as a COPC and included for a simple HI estimation, as summarized below.

Chemical	Station ID	Concentration (mg/kg)	Industrial RBC (mg/kg)	Residential RBC [HI = 1] (mg/kg)	Industrial HI	Residential HI
Chromium (assumed as hexavalent)	197SB003	30.5	6100*	230*	0.005	0.13
Chromium (Assumed as trivalent)	197SB003	30.5	3.1 E10^{5}	120,000	<0.0001	<0.0001

*EPA Region 3 RBC value for hexavalent chromium

Chromium occurs in both trivalent and hexavalent forms in soils, and the majority of the chromium is likely to be in the less mobile and less toxic trivalent form. The RBC values for both hexavalent and trivalent forms were used to estimate a sample-specific HI for the residential and industrial scenario, as presented in the table above. The detected chromium levels are well below the target HI value of 1.0 for both the industrial and future residential land use scenarios.

Based on this evaluation, chromium is not considered a COC for surface soil at SWMUs 197 and 198.

5.2 Subsurface Soil COPCs

5.2.1 Pentachlorophenol

A single subsurface soil sample (K198SB002) had PCP detected at an estimated value of 0.186 mg/kg, below the method detection limit for PCP. The area-wide average is likely to be lower than the reported concentration, as none of the other samples had detectable levels of PCP. The PCP was not detected in site groundwater in the downgradient location from the soil sample where PCP was detected (i.e., geoprobe sample from K198GP001). Therefore, the detected PCP level above SSL does not present a leachability threat for the sites. Because PCP is not widely present at the site and it is not leaching to the groundwater as suggested by the SSL value exceedance, PCP is not identified as a COC.

5.3 Summary of COCs

Several surface and subsurface soil COPCs were identified in Section 4.0. Based on the evaluation conducted, neither BEQ nor chromium are identified as COCs for surface soil, under the conservative evaluation conducted for the site. PCP is not identified as a COC for subsurface soil, as it is not present in the site groundwater and it is detected in only one sample well below the practical quantitation limit.

7.0 References

CH2M-Jones. *Background PAHs Study Report, Technical Information for Development of Background BEQ Values, Charleston Naval Complex, North Charleston, South Carolina*. February 2001a.

CH2M-Jones. *Project Team Notebook and Instructions: Charleston Naval Complex, Environmental Restoration Project*. Revision 1A. December 2001b.

CH2M-Jones. *Application of Soil-Screening Levels (SSLs) at Charleston Naval Complex*. Technical Memorandum. March 9, 2001c.

CH2M-Jones. *RFA and RFI Work Plan Addendum, SWMUs 163, 197 and 198, Zone K Naval Station Annex*. Revision 0. January 2004.

EnSafe Inc. *Zone K RFI Report, Revision 0*. June 11, 1999.

EnSafe Inc./Allen & Hoshall. *Final Comprehensive RFI Work Plan*. May 31, 1994.

EnSafe Inc./Allen & Hoshall. *Final Comprehensive Sampling and Analysis Plan, NAVBASE Charleston*. July 30, 1996.

U.S. Environmental Protection Agency (EPA). *Soil Screening Guidance: Technical Background Document*. Office of Solid Waste and Emergency Response. May 1996.

U.S. Environmental Protection Agency (EPA). *Test Methods for Evaluating Solid Waste, SW-846, Revision 4*. 1996.

U.S. Environmental Protection Agency (EPA). Environmental Services Division's *Laboratory Operations and Quality Control Manual* (ESDLOQCM). 1997.

U.S. Environmental Protection Agency (EPA). *Risk Based Concentration Table*. EPA Region III. October 6, 2000.

U.S. Environmental Protection Agency (EPA). *Environmental Services Division Standard Operating Procedures and Quality Assurance Manual* (ESDSOPQAM). 2001.

PHOTOGRAPHS OF SWMUs 197 AND 198

Photograph 1. Paint locker and adjacent swale (SWMU 197)

Photograph 2. South side of paint locker and tank saddles (SWMU 197)

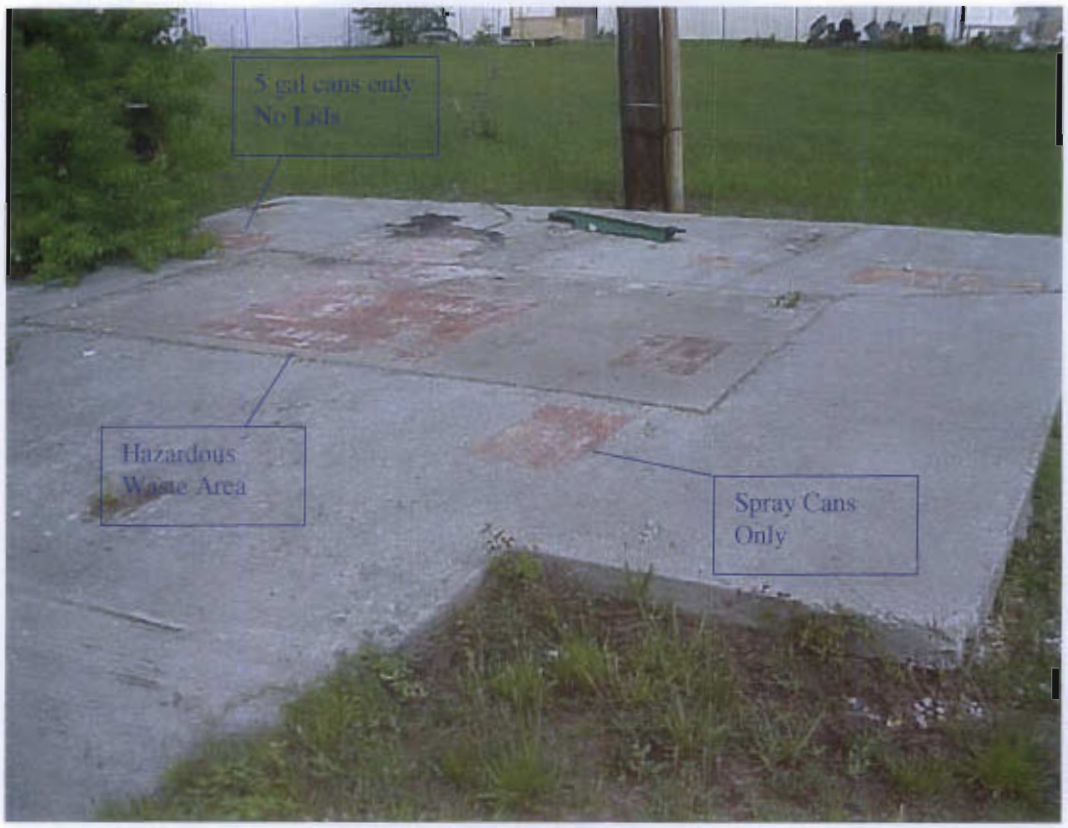

Photograph 3. Hazardous waste storage pad (SWMU 198) located across Sixth Street from paint locker (markings are denoted on figure)

Appendix B

	StationID	H197GP001	H197GP001	H197GP001	H197GP001	H197GP002	H197GP002
	SampleID	197GP00108	197GP00108	197GP00115	197GP00115	197GP00208	197GP00208
	DateCollected	03/18/2004	03/18/2004	03/18/2004	03/18/2004	03/18/2004	03/18/2004
	DateAnalyzed	03/26/2004	04/06/2004	03/26/2004	04/06/2004	03/26/2004	04/06/2004
	DateExtracted	03/25/2004	03/29/2004	03/25/2004	03/29/2004	03/25/2004	03/29/2004
	SDGNumber	109376	109376	109376	109376	109376	109376
Arsenic	ug/L		2.3 U		6.98 J		38.3 =
Barium	ug/L		15.9 J		508 J		1410 J
Cadmium	ug/L		0.38 U		0.38 U		0.38 U
Chromium, Total	ug/L		6.24 J		387 =		1160 =
Lead	ug/L		1.96 U		56.4 =		309 =
Mercury	ug/L	0.066 U		0.066 U		0.633 =	
Selenium	ug/L		4.49 U		4.49 U		22.4 =
Silver	ug/L		0.64 U		0.64 U		0.64 U

	StationID	H197GP002	H197GP002	H198GP001	H198GP001	H198GP001	H198GP001
	SampleID	197GP00215	197GP00215	198GP00108	198GP00108	198GP00115	198GP00115
	DateCollected	03/18/2004	03/18/2004	03/18/2004	03/18/2004	03/18/2004	03/18/2004
	DateAnalyzed	03/26/2004	04/06/2004	03/26/2004	04/06/2004	03/26/2004	04/06/2004
	DateExtracted	03/25/2004	03/29/2004	03/25/2004	03/29/2004	03/25/2004	03/29/2004
	SDGNumber	109376	109376	109376	109376	109376	109376
Arsenic	ug/L		2.3 U		2.3 U		3.7 J
Barium	ug/L		3.77 UJ		98.8 J		778 J
Cadmium	ug/L		0.38 U		0.38 U		0.38 U
Chromium, Total	ug/L		1.03 U		92.5 =		430 =
Lead	ug/L		1.18 U		22.6 =		53.2 =
Mercury	ug/L	0.066 U		0.066 U		0.114 J	
Selenium	ug/L		4.49 U		4.49 U		4.49 U
Silver	ug/L		0.64 U		0.64 U		0.64 U

StationID		H198GP001		H198GP001		H198GP002		H198GP002		H198GP002		H198GP002	
SampleID		198HP00108		198HP00108		198GP00208		198GP00208		198GP00215		198GP00215	
DateCollected		03/18/2004		03/18/2004		03/18/2004		03/18/2004		03/18/2004		03/18/2004	
DateAnalyzed		03/26/2004		04/06/2004		03/26/2004		04/06/2004		03/26/2004		04/06/2004	
DateExtracted		03/25/2004		03/29/2004		03/25/2004		03/29/2004		03/25/2004		03/29/2004	
SDGNumber		109376		109376		109376		109376		109376		109376	
Arsenic	ug/L			2.3	U			36.3	J			36.7	=
Barium	ug/L			18.5	J			1870	J			1760	J
Cadmium	ug/L			0.38	U			1.9	U			0.38	U
Chromium, Total	ug/L			5.55	J			764	=			640	=
Lead	ug/L			1.9	U			225	=			206	=
Mercury	ug/L	0.066	U			0.688	=			0.726	=		
Selenium	ug/L			4.49	U			22.4	U			22.4	U
Silver	ug/L			0.64	U			0.64	U			0.64	U

	StationID	H197GP001		H197GP001		H197GP002		H197GP002		H198GP001	
	SampleID	197GP00108		197GP00115		197GP00208		197GP00215		198GP00108	
	DateCollected	03/18/2004		03/18/2004		03/18/2004		03/18/2004		03/18/2004	
	DateAnalyzed	03/24/2004		03/24/2004		03/24/2004		03/24/2004		03/24/2004	
	DateExtracted	03/23/2004		03/23/2004		03/23/2004		03/23/2004		03/23/2004	
	SDGNumber	109376		109376		109376		109376		109376	
2,4,5-Trichlorophenol	ug/L	47.2	U	47.2	U	48.1	U	49.5	U	49	U
2,4,6-Trichlorophenol	ug/L	9.4	U	9.4	U	9.6	U	9.9	U	9.8	U
2,4-Dichlorophenol	ug/L	9.4	U	9.4	U	9.6	U	9.9	U	9.8	U
2,4-Dimethylphenol	ug/L	9.4	U	9.4	U	9.6	U	9.9	U	9.8	U
2,4-Dinitrophenol	ug/L	47.2	U	47.2	U	48.1	U	49.5	U	49	U
2,4-Dinitrotoluene	ug/L	9.4	U	9.4	U	9.6	U	9.9	U	9.8	U
2,6-Dinitrotoluene	ug/L	9.4	U	9.4	U	9.6	U	9.9	U	9.8	U
2-Chloronaphthalene	ug/L	9.4	U	9.4	U	9.6	U	9.9	U	9.8	U
2-Chlorophenol	ug/L	9.4	U	9.4	U	9.6	U	9.9	U	9.8	U
2-Methylnaphthalene	ug/L	9.4	U	9.4	U	9.6	U	9.9	U	9.8	U
2-Methylphenol (o-Cresol)	ug/L	9.4	U	9.4	U	9.6	U	9.9	U	9.8	U
2-Nitroaniline	ug/L	47.2	UJ	47.2	UJ	48.1	UJ	49.5	UJ	49	UJ
2-Nitrophenol	ug/L	9.4	U	9.4	U	9.6	U	9.9	U	9.8	U
3,3'-Dichlorobenzidine	ug/L	18.9	U	18.9	U	19.2	U	19.8	U	19.6	U
3-Methylphenol/4-Methylphenol (mp-Cresol)	ug/L	9.4	U	9.4	U	9.6	U	9.9	U	9.8	U
3-Nitroaniline	ug/L	47.2	U	47.2	U	48.1	U	49.5	U	49	U
4,6-Dinitro-2-methylphenol	ug/L	47.2	UJ	47.2	UJ	48.1	UJ	49.5	UJ	49	UJ
4-Bromophenyl Phenyl Ether	ug/L	9.4	U	9.4	U	9.6	U	9.9	U	9.8	U
4-Chloro-3-methylphenol	ug/L	9.4	U	9.4	U	9.6	U	9.9	U	9.8	U
4-Chloroaniline	ug/L	9.4	UJ	9.4	UJ	9.6	UJ	9.9	UJ	9.8	UJ
4-Chlorophenyl Phenyl Ether	ug/L	9.4	U	9.4	U	9.6	U	9.9	U	9.8	U
4-Nitroaniline	ug/L	47.2	UJ	47.2	UJ	48.1	UJ	49.5	UJ	49	UJ
4-Nitrophenol	ug/L	47.2	U	47.2	U	48.1	U	49.5	U	49	U
Acenaphthene	ug/L	9.4	U	9.4	U	9.6	U	9.9	U	9.8	U
Acenaphthylene	ug/L	9.4	U	9.4	U	9.6	U	9.9	U	9.8	U
Anthracene	ug/L	9.4	U	9.4	U	9.6	U	9.9	U	9.8	U
Benzo(a)Anthracene	ug/L	9.4	U	9.4	U	9.6	U	9.9	U	9.8	U
Benzo(a)Pyrene	ug/L	9.4	U	9.4	U	9.6	U	9.9	U	9.8	U
Benzo(b)Fluoranthene	ug/L	9.4	U	9.4	U	9.6	U	9.9	U	9.8	U
Benzo(g,h,i)Perylene	ug/L	9.4	U	9.4	U	9.6	U	9.9	U	9.8	U

	StationID	H198GP001		H198GP001		H198GP002		H198GP002	
	SampleID	198GP00115		198HP00108		198GP00208		198GP00215	
	DateCollected	03/18/2004		03/18/2004		03/18/2004		03/18/2004	
	DateAnalyzed	03/24/2004		03/24/2004		03/24/2004		03/24/2004	
	DateExtracted	03/23/2004		03/23/2004		03/23/2004		03/23/2004	
	SDGNumber	109376		109376		109376		109376	
2,4,5-Trichlorophenol	ug/L	49.5	U	48.1	U	51.5	U	49	U
2,4,6-Trichlorophenol	ug/L	9.9	U	9.6	U	10.3	U	9.8	U
2,4-Dichlorophenol	ug/L	9.9	U	9.6	U	10.3	U	9.8	U
2,4-Dimethylphenol	ug/L	9.9	U	9.6	U	10.3	U	9.8	U
2,4-Dinitrophenol	ug/L	49.5	U	48.1	U	51.5	U	49	U
2,4-Dinitrotoluene	ug/L	9.9	U	9.6	U	10.3	U	9.8	U
2,6-Dinitrotoluene	ug/L	9.9	U	9.6	U	10.3	U	9.8	U
2-Chloronaphthalene	ug/L	9.9	U	9.6	U	10.3	U	9.8	U
2-Chlorophenol	ug/L	9.9	U	9.6	U	10.3	U	9.8	U
2-Methylnaphthalene	ug/L	9.9	U	9.6	U	10.3	U	9.8	U
2-Methylphenol (o-Cresol)	ug/L	9.9	U	9.6	U	10.3	U	9.8	U
2-Nitroaniline	ug/L	49.5	UJ	48.1	UJ	51.5	UJ	49	UJ
2-Nitrophenol	ug/L	9.9	U	9.6	U	10.3	U	9.8	U
3,3'-Dichlorobenzidine	ug/L	19.8	U	19.2	U	20.6	U	19.6	U
3-Methylphenol/4-Methylphenol (mp-Cresol)	ug/L	9.9	U	9.6	U	10.3	U	9.8	U
3-Nitroaniline	ug/L	49.5	U	48.1	U	51.5	U	49	U
4,6-Dinitro-2-methylphenol	ug/L	49.5	UJ	48.1	UJ	51.5	UJ	49	UJ
4-Bromophenyl Phenyl Ether	ug/L	9.9	U	9.6	U	10.3	U	9.8	U
4-Chloro-3-methylphenol	ug/L	9.9	U	9.6	U	10.3	U	9.8	U
4-Chloroaniline	ug/L	9.9	UJ	9.6	UJ	10.3	UJ	9.8	UJ
4-Chlorophenyl Phenyl Ether	ug/L	9.9	U	9.6	U	10.3	U	9.8	U
4-Nitroaniline	ug/L	49.5	UJ	48.1	UJ	51.5	UJ	49	UJ
4-Nitrophenol	ug/L	49.5	U	48.1	U	51.5	U	49	U
Acenaphthene	ug/L	9.9	U	9.6	U	10.3	U	9.8	U
Acenaphthylene	ug/L	9.9	U	9.6	U	10.3	U	9.8	U
Anthracene	ug/L	9.9	U	9.6	U	10.3	U	9.8	U
Benzo(a)Anthracene	ug/L	9.9	U	9.6	U	10.3	U	9.8	U
Benzo(a)Pyrene	ug/L	9.9	U	9.6	U	10.3	U	9.8	U
Benzo(b)Fluoranthene	ug/L	9.9	U	9.6	U	10.3	U	9.8	U
Benzo(g,h,i)Perylene	ug/L	9.9	U	9.6	U	10.3	U	9.8	U

	StationID	H197GP001		H197GP001		H197GP002		H197GP002		H198GP001	
	SampleID	197GP00108		197GP00115		197GP00208		197GP00215		198GP00108	
	DateCollected	03/18/2004		03/18/2004		03/18/2004		03/18/2004		03/18/2004	
	DateAnalyzed	03/24/2004		03/24/2004		03/24/2004		03/24/2004		03/24/2004	
	DateExtracted	03/23/2004		03/23/2004		03/23/2004		03/23/2004		03/23/2004	
	SDGNumber	109376		109376		109376		109376		109376	
Benzo(k)Fluoranthene	ug/L	9.4	U	9.4	U	9.6	U	9.9	U	9.8	U
Benzoic acid	ug/L	47.2	UJ	47.2	UJ	48.1	UJ	49.5	UJ	49	UJ
Benzyl alcohol	ug/L	9.4	U	9.4	U	9.6	U	9.9	U	9.8	U
Benzyl Butyl Phthalate	ug/L	9.4	U	9.4	U	9.6	U	9.9	U	9.8	U
bis(2-Chloroethoxy) Methane	ug/L	9.4	U	9.4	U	9.6	U	9.9	U	9.8	U
bis(2-Chloroethyl) ether (2-Chloroethyl Ether)	ug/L	9.4	U	9.4	U	9.6	U	9.9	U	9.8	U
Bis(2-Chloroisopropyl)Ether	ug/L	9.4	U	9.4	U	9.6	U	9.9	U	9.8	U
bis(2-Ethylhexyl) Phthalate	ug/L	9.4	U	9.4	U	9.6	U	9.9	U	9.8	U
Carbazole	ug/L	9.4	U	9.4	U	9.6	U	9.9	U	9.8	U
Chrysene	ug/L	9.4	U	9.4	U	9.6	U	9.9	U	9.8	U
Di-n-butyl Phthalate	ug/L	9.4	U	9.4	U	9.6	U	9.9	U	9.8	U
Di-n-octylphthalate	ug/L	9.4	U	9.4	U	9.6	U	9.9	U	9.8	U
Dibenz(a,h)anthracene	ug/L	9.4	U	9.4	U	9.6	U	9.9	U	9.8	U
Dibenzofuran	ug/L	9.4	U	9.4	U	9.6	U	9.9	U	9.8	U
Diethyl Phthalate	ug/L	9.4	U	9.4	U	9.6	U	9.9	U	9.8	U
Dimethyl Phthalate	ug/L	9.4	U	9.4	U	9.6	U	9.9	U	9.8	U
Diphenylamine	ug/L	9.4	U	9.4	U	9.6	U	9.9	U	9.8	U
Fluoranthene	ug/L	9.4	U	9.4	U	9.6	U	9.9	U	9.8	U
Fluorene	ug/L	9.4	U	9.4	U	9.6	U	9.9	U	9.8	U
Hexachlorobenzene	ug/L	9.4	U	9.4	U	9.6	U	9.9	U	9.8	U
Hexachlorobutadiene	ug/L	9.4	U	9.4	U	9.6	U	9.9	U	9.8	U
Hexachlorocyclopentadiene	ug/L	9.4	UJ	9.4	UJ	9.6	UJ	9.9	UJ	9.8	UJ
Hexachloroethane	ug/L	9.4	U	9.4	U	9.6	U	9.9	U	9.8	U
Indeno(1,2,3-c,d)pyrene	ug/L	9.4	U	9.4	U	9.6	U	9.9	U	9.8	U
Isophorone	ug/L	9.4	U	9.4	U	9.6	U	9.9	U	9.8	U
N-Nitrosodi-n-propylamine	ug/L	9.4	U	9.4	U	9.6	U	9.9	U	9.8	U
Naphthalene	ug/L	9.4	U	9.4	U	9.6	U	9.9	U	9.8	U
Nitrobenzene	ug/L	9.4	U	9.4	U	9.6	U	9.9	U	9.8	U
Pentachlorophenol	ug/L	47.2	U	47.2	U	48.1	U	49.5	U	49	U
Phenanthrene	ug/L	9.4	U	9.4	U	9.6	U	9.9	U	9.8	U

StationID		H198GP001		H198GP001		H198GP002		H198GP002	
SampleID		198GP00115		198HP00108		198GP00208		198GP00215	
DateCollected		03/18/2004		03/18/2004		03/18/2004		03/18/2004	
DateAnalyzed		03/24/2004		03/24/2004		03/24/2004		03/24/2004	
DateExtracted		03/23/2004		03/23/2004		03/23/2004		03/23/2004	
SDGNumber		109376		109376		109376		109376	
Benzo(k)Fluoranthene	ug/L	9.9	U	9.6	U	10.3	U	9.8	U
Benzoic acid	ug/L	49.5	UJ	48.1	UJ	51.5	UJ	49	UJ
Benzyl alcohol	ug/L	9.9	U	9.6	U	10.3	U	9.8	U
Benzyl Butyl Phthalate	ug/L	9.9	U	9.6	U	10.3	U	9.8	U
bis(2-Chloroethoxy) Methane	ug/L	9.9	U	9.6	U	10.3	U	9.8	U
bis(2-Chloroethyl) ether (2-Chloroethyl Ether)	ug/L	9.9	U	9.6	U	10.3	U	9.8	U
Bis(2-Chloroisopropyl)Ether	ug/L	9.9	U	9.6	U	10.3	U	9.8	U
bis(2-Ethylhexyl) Phthalate	ug/L	9.9	U	9.6	U	10.3	U	9.8	U
Carbazole	ug/L	9.9	U	9.6	U	10.3	U	9.8	U
Chrysene	ug/L	9.9	U	9.6	U	10.3	U	9.8	U
Di-n-butyl Phthalate	ug/L	9.9	U	9.6	U	10.3	U	9.8	U
Di-n-octylphthalate	ug/L	9.9	U	9.6	U	10.3	U	9.8	U
Dibenz(a,h)anthracene	ug/L	9.9	U	9.6	U	10.3	U	9.8	U
Dibenzofuran	ug/L	9.9	U	9.6	U	10.3	U	9.8	U
Diethyl Phthalate	ug/L	9.9	U	9.6	U	10.3	U	9.8	U
Dimethyl Phthalate	ug/L	9.9	U	9.6	U	10.3	U	9.8	U
Diphenylamine	ug/L	9.9	U	9.6	U	10.3	U	9.8	U
Fluoranthene	ug/L	9.9	U	9.6	U	10.3	U	9.8	U
Fluorene	ug/L	9.9	U	9.6	U	10.3	U	9.8	U
Hexachlorobenzene	ug/L	9.9	U	9.6	U	10.3	U	9.8	U
Hexachlorobutadiene	ug/L	9.9	U	9.6	U	10.3	U	9.8	U
Hexachlorocyclopentadiene	ug/L	9.9	UJ	9.6	UJ	10.3	UJ	9.8	UJ
Hexachloroethane	ug/L	9.9	U	9.6	U	10.3	U	9.8	U
Indeno(1,2,3-c,d)pyrene	ug/L	9.9	U	9.6	U	10.3	U	9.8	U
Isophorone	ug/L	9.9	U	9.6	U	10.3	U	9.8	U
N-Nitrosodi-n-propylamine	ug/L	9.9	U	9.6	U	10.3	U	9.8	U
Naphthalene	ug/L	9.9	U	9.6	U	10.3	U	9.8	U
Nitrobenzene	ug/L	9.9	U	9.6	U	10.3	U	9.8	U
Pentachlorophenol	ug/L	49.5	U	48.1	U	51.5	U	49	U
Phenanthrene	ug/L	9.9	U	9.6	U	10.3	U	9.8	U

	StationID	H197GP001		H197GP001		H197GP002		H197GP002		H198GP001	
	SampleID	197GP00108		197GP00115		197GP00208		197GP00215		198GP00108	
	DateCollected	03/18/2004		03/18/2004		03/18/2004		03/18/2004		03/18/2004	
	DateAnalyzed	03/24/2004		03/24/2004		03/24/2004		03/24/2004		03/24/2004	
	DateExtracted	03/23/2004		03/23/2004		03/23/2004		03/23/2004		03/23/2004	
	SDGNumber	109376		109376		109376		109376		109376	
Phenol	ug/L	9.4	U	9.4	U	9.6	U	9.9	U	9.8	U
Pyrene	ug/L	9.4	U	9.4	U	9.6	U	9.9	U	9.8	U

	StationID	H198GP001		H198GP001		H198GP002		H198GP002	
	SampleID	198GP00115		198HP00108		198GP00208		198GP00215	
	DateCollected	03/18/2004		03/18/2004		03/18/2004		03/18/2004	
	DateAnalyzed	03/24/2004		03/24/2004		03/24/2004		03/24/2004	
	DateExtracted	03/23/2004		03/23/2004		03/23/2004		03/23/2004	
	SDGNumber	109376		109376		109376		109376	
Phenol	ug/L	9.9	U	9.6	U	10.3	U	9.8	U
Pyrene	ug/L	9.9	U	9.6	U	10.3	U	9.8	U

Analytical Data Summary

	StationID	H197GP001		H197GP001		H197GP002		H197GP002		H198GP001	
	SampleID	197GP00108		197GP00115		197GP00208		197GP00215		198GP00108	
	DateCollected	03/18/2004		03/18/2004		03/18/2004		03/18/2004		03/18/2004	
	DateAnalyzed	03/26/2004		03/26/2004		03/26/2004		03/26/2004		03/26/2004	
	DateExtracted	03/26/2004		03/26/2004		03/26/2004		03/26/2004		03/26/2004	
	SDGNumber	109376		109376		109376		109376		109376	
1,1,1-Trichloroethane	ug/L	5	U	5	U	5	U	5	U	5	U
1,1,2,2-Tetrachloroethane	ug/L	5	U	5	U	5	U	5	U	5	U
1,1,2-Trichloroethane	ug/L	5	U	5	U	5	U	5	U	5	U
1,1-Dichloroethane	ug/L	5	U	5	U	5	U	5	U	5	U
1,1-Dichloroethene	ug/L	5	U	5	U	5	U	5	U	5	U
1,2,3-Trichlorobenzene	ug/L	5	U	5	U	5	U	5	U	5	U
1,2,4-Trichlorobenzene	ug/L	5	U	5	U	5	U	5	U	5	U
1,2-Dichlorobenzene	ug/L	5	U	5	U	5	U	5	U	5	U
1,2-Dichloroethane	ug/L	5	U	5	U	5	U	5	U	5	U
1,2-Dichloroethene (total)	ug/L	5	U	5	U	5	U	5	U	5	U
1,2-Dichloropropane	ug/L	5	U	5	U	5	U	5	U	5	U
1,3-Dichlorobenzene	ug/L	5	U	5	U	5	U	5	U	5	U
1,4-Dichlorobenzene	ug/L	5	U	5	U	5	U	5	U	5	U
2-Chloroethyl vinyl ether	ug/L	10	U	10	U	10	U	10	U	10	UJ
2-Hexanone	ug/L	10	U	10	U	10	U	10	U	10	U
Acetone	ug/L	10	U	10	U	10.5	U	10	U	10	U
Benzene	ug/L	5	U	5	U	5	U	5	U	5	U
Bromodichloromethane	ug/L	5	U	5	U	5	U	5	U	5	U
Bromoform	ug/L	5	U	5	U	5	U	5	U	5	U
Bromomethane	ug/L	10	U	10	U	10	U	10	U	10	U
Carbon Disulfide	ug/L	5	U	5	U	5	U	5	U	5	U
Carbon Tetrachloride	ug/L	5	U	5	U	5	U	5	U	5	U
Chlorobenzene	ug/L	5	U	5	U	5	U	5	U	5	U
Chloroethane	ug/L	10	U	10	U	10	U	10	U	10	U
Chloroform	ug/L	5	U	5	U	5	U	5	U	5	U
Chloromethane	ug/L	10	U	10	U	10	U	10	U	10	U
cis-1,2-Dichloroethylene	ug/L	5	U	5	U	5	U	5	U	5	U
cis-1,3-Dichloropropene	ug/L	5	U	5	U	5	U	5	U	5	U
Dibromochloromethane	ug/L	5	U	5	U	5	U	5	U	5	U
Ethylbenzene	ug/L	5	U	5	U	5	U	5	U	5	U

StationID		H198GP001		H198GP001		H198GP002		H198GP002	
SampleID		198GP00115		198HP00108		198GP00208		198GP00215	
DateCollected		03/18/2004		03/18/2004		03/18/2004		03/18/2004	
DateAnalyzed		03/25/2004		03/25/2004		03/25/2004		03/25/2004	
DateExtracted		03/25/2004		03/25/2004		03/25/2004		03/25/2004	
SDGNumber		109376		109376		109376		109376	
1,1,1-Trichloroethane	ug/L	5	U	5	U	5	U	5	U
1,1,2,2-Tetrachloroethane	ug/L	5	U	5	U	5	U	5	U
1,1,2-Trichloroethane	ug/L	5	U	5	U	5	U	5	U
1,1-Dichloroethane	ug/L	5	U	5	U	5	U	5	U
1,1-Dichloroethene	ug/L	5	U	5	U	5	U	5	U
1,2,3-Trichlorobenzene	ug/L	5	U	5	U	5	U	5	U
1,2,4-Trichlorobenzene	ug/L	5	U	5	U	5	U	5	U
1,2-Dichlorobenzene	ug/L	5	U	5	U	5	U	5	U
1,2-Dichloroethane	ug/L	5	U	5	U	5	U	5	U
1,2-Dichloroethene (total)	ug/L	5	U	5	U	5	U	5	U
1,2-Dichloropropane	ug/L	5	U	5	U	5	U	5	U
1,3-Dichlorobenzene	ug/L	5	U	5	U	5	U	5	U
1,4-Dichlorobenzene	ug/L	5	U	5	U	5	U	5	U
2-Chloroethyl vinyl ether	ug/L	10	U	10	U	10	U	10	U
2-Hexanone	ug/L	10	U	10	U	10	U	10	U
Acetone	ug/L	10.2	UJ	10	UJ	10	UJ	10	UJ
Benzene	ug/L	5	U	5	U	5	U	5	U
Bromodichloromethane	ug/L	5	U	5	U	5	U	5	U
Bromoform	ug/L	5	U	5	U	5	U	5	U
Bromomethane	ug/L	10	U	10	U	10	U	10	U
Carbon Disulfide	ug/L	5	U	5	U	5	U	5	U
Carbon Tetrachloride	ug/L	5	U	5	U	5	U	5	U
Chlorobenzene	ug/L	5	U	5	U	5	U	5	U
Chloroethane	ug/L	10	U	10	U	10	U	10	U
Chloroform	ug/L	5	U	5	U	5	U	5	U
Chloromethane	ug/L	10	U	10	U	10	U	10	U
cis-1,2-Dichloroethylene	ug/L	5	U	5	U	5	U	5	U
cis-1,3-Dichloropropene	ug/L	5	U	5	U	5	U	5	U
Dibromochloromethane	ug/L	5	U	5	U	5	U	5	U
Ethylbenzene	ug/L	5	U	5	U	5	U	5	U

StationID		H197GP001		H197GP001		H197GP002		H197GP002		H198GP001	
SampleID		197GP00108		197GP00115		197GP00208		197GP00215		198GP00108	
DateCollected		03/18/2004		03/18/2004		03/18/2004		03/18/2004		03/18/2004	
DateAnalyzed		03/26/2004		03/26/2004		03/26/2004		03/26/2004		03/26/2004	
DateExtracted		03/26/2004		03/26/2004		03/26/2004		03/26/2004		03/26/2004	
SDGNumber		109376		109376		109376		109376		109376	
m+p Xylene	ug/L	5	U	5	U	5	U	5	U	5	U
Methyl ethyl ketone (2-Butanone)	ug/L	10	U	10	U	10	U	10	U	10	U
Methyl isobutyl ketone (4-Methyl-2-pentanone)	ug/L	10	U	10	U	10	U	10	U	10	U
Methylene Chloride	ug/L	5	U	5	U	5	U	5	U	5	U
o-Xylene	ug/L	5	U	5	U	5	U	5	U	5	U
Styrene	ug/L	5	U	5	U	5	U	5	U	5	U
Tetrachloroethylene (PCE)	ug/L	5	U	5	U	5	U	5	U	5	U
Toluene	ug/L	5	U	5	U	5	U	5	U	5	U
trans-1,2-Dichloroethene	ug/L	5	U	5	U	5	U	5	U	5	U
trans-1,3-Dichloropropene	ug/L	5	U	5	U	5	U	5	U	5	U
Trichloroethylene (TCE)	ug/L	5	U	1.3	J	5	U	5	U	5	U
Vinyl acetate	ug/L	10	U	10	U	10	U	10	U	10	U
Vinyl chloride	ug/L	10	U	10	U	10	U	10	U	10	U
Xylenes, Total	ug/L	5	U	5	U	5	U	5	U	5	U

	StationID	H198GP001		H198GP001		H198GP002		H198GP002	
	SampleID	198GP00115		198HP00108		198GP00208		198GP00215	
	DateCollected	03/18/2004		03/18/2004		03/18/2004		03/18/2004	
	DateAnalyzed	03/25/2004		03/25/2004		03/25/2004		03/25/2004	
	DateExtracted	03/25/2004		03/25/2004		03/25/2004		03/25/2004	
	SDGNumber	109376		109376		109376		109376	
m+p Xylene	ug/L	5	U	5	U	5	U	5	U
Methyl ethyl ketone (2-Butanone)	ug/L	10	UJ	10	UJ	10	UJ	10	UJ
Methyl isobutyl ketone (4-Methyl-2-pentanone)	ug/L	10	U	10	U	10	U	10	U
Methylene Chloride	ug/L	5	U	5	U	5	U	5	U
o-Xylene	ug/L	5	U	5	U	5	U	5	U
Styrene	ug/L	5	U	5	U	5	U	5	U
Tetrachloroethylene (PCE)	ug/L	5	U	5	U	5	U	5	U
Toluene	ug/L	5	U	5	U	5	U	5	U
trans-1,2-Dichloroethene	ug/L	5	U	5	U	5	U	5	U
trans-1,3-Dichloropropene	ug/L	5	U	5	U	5	U	5	U
Trichloroethylene (TCE)	ug/L	5	U	5	U	5	U	5	U
Vinyl acetate	ug/L	10	U	10	U	10	U	10	U
Vinyl chloride	ug/L	10	U	10	U	10	U	10	U
Xylenes, Total	ug/L	5	U	5	U	5	U	5	U

Analytical Data Summary

	StationID	H197SB001		H197SB001		H197SB002		H197SB002	
	SampleID	197SB00101 (0-1ft)		197SB00102 (3-5ft)		197SB00201 (0-1ft)		197SB00202 (3-5ft)	
	DateCollected	05/13/2004 13:45		05/13/2004 13:50		05/13/2004 14:00		05/13/2004 14:05	
	DateAnalyzed	24-May-04		24-May-04		24-May-04		25-May-04	
	DateExtracted	05/13/2004		05/13/2004		05/13/2004		05/13/2004	
	SDGNumber	112925		112925		112925		112925	
1,1,1-Trichloroethane	ug/kg	6.5	U	6.4	U	6.4	U	6.5	U
1,1,2,2-Tetrachloroethane	ug/kg	6.5	U	6.4	U	6.4	U	6.5	U
1,1,2-Trichloroethane	ug/kg	6.5	U	6.4	U	6.4	U	6.5	U
1,1-Dichloroethane	ug/kg	6.5	U	6.4	U	6.4	U	6.5	U
1,1-Dichloroethene	ug/kg	6.5	U	6.4	U	6.4	U	6.5	U
1,2,3-Trichlorobenzene	ug/kg	6.5	U	6.4	U	6.4	U	6.5	U
1,2,4-Trichlorobenzene	ug/kg	6.5	U	6.4	U	6.4	U	6.5	U
1,2-Dichlorobenzene	ug/kg	6.5	U	6.4	U	6.4	U	6.5	U
1,2-Dichloroethane	ug/kg	6.5	U	6.4	U	6.4	U	6.5	U
1,2-Dichloroethene (total)	ug/kg	6.5	U	6.4	U	6.4	U	6.5	U
1,2-Dichloropropane	ug/kg	6.5	U	6.4	U	6.4	U	6.5	U
1,3-Dichlorobenzene	ug/kg	6.5	U	6.4	U	6.4	U	6.5	U
1,4-Dichlorobenzene	ug/kg	6.5	U	6.4	U	6.4	U	6.5	U
2-Chloroethyl vinyl ether	ug/kg	12.9	U	12.8	U	12.7	U	13	U
2-Hexanone	ug/kg	12.9	U	12.8	U	12.7	U	13	U
Acetone	ug/kg	32.5	J	12.8	UJ	13.3	J	13	UJ
Benzene	ug/kg	6.5	U	6.4	U	6.4	U	6.5	U
Bromodichloromethane	ug/kg	6.5	U	6.4	U	6.4	U	6.5	U
Bromoform	ug/kg	6.5	U	6.4	U	6.4	U	6.5	U
Bromomethane	ug/kg	12.9	U	12.8	U	12.7	U	13	U
Carbon Disulfide	ug/kg	6.5	U	6.4	U	6.4	U	6.5	U
Carbon Tetrachloride	ug/kg	6.5	U	6.4	U	6.4	U	6.5	U
Chlorobenzene	ug/kg	6.5	U	6.4	U	6.4	U	6.5	U
Chloroethane	ug/kg	12.9	U	12.8	U	12.7	U	13	U
Chloroform	ug/kg	6.5	U	6.4	U	6.4	U	6.5	U
Chloromethane	ug/kg	12.9	U	12.8	U	12.7	U	13	U
cis-1,2-Dichloroethylene	ug/kg	6.5	U	6.4	U	6.4	U	6.5	U
cis-1,3-Dichloropropene	ug/kg	6.5	U	6.4	U	6.4	U	6.5	U
Dibromochloromethane	ug/kg	6.5	U	6.4	U	6.4	U	6.5	U
Ethylbenzene	ug/kg	6.5	U	6.4	U	6.4	U	6.5	U

StationID		H197SB003		H197SB003		H197SB004		H197SB004	
SampleID		197SB00301 (0-1ft)		197SB00302 (3-5ft)		197SB00401 (0-1ft)		197SB00402 (3-5ft)	
DateCollected		05/13/2004 14:15		05/13/2004 14:20		05/13/2004 14:30		05/13/2004 14:35	
DateAnalyzed		25-May-04		25-May-04		25-May-04		25-May-04	
DateExtracted		05/13/2004		05/13/2004		05/13/2004		05/13/2004	
SDGNumber		112925		112925		112925		112925	
1,1,1-Trichloroethane	ug/kg	6.5	U	6.2	U	6.6	U	6.6	U
1,1,2,2-Tetrachloroethane	ug/kg	6.5	U	6.2	U	6.6	U	6.6	U
1,1,2-Trichloroethane	ug/kg	6.5	U	6.2	U	6.6	U	6.6	U
1,1-Dichloroethane	ug/kg	6.5	U	6.2	U	6.6	U	6.6	U
1,1-Dichloroethene	ug/kg	6.5	U	6.2	U	2.4	J	6.6	U
1,2,3-Trichlorobenzene	ug/kg	6.5	U	6.2	U	6.6	U	6.6	U
1,2,4-Trichlorobenzene	ug/kg	6.5	U	6.2	U	6.6	U	6.6	U
1,2-Dichlorobenzene	ug/kg	6.5	U	6.2	U	6.6	U	6.6	U
1,2-Dichloroethane	ug/kg	6.5	U	6.2	U	6.6	U	6.6	U
1,2-Dichloroethene (total)	ug/kg	6.5	U	6.2	U	6.6	U	6.6	U
1,2-Dichloropropane	ug/kg	6.5	U	6.2	U	6.6	U	6.6	U
1,3-Dichlorobenzene	ug/kg	6.5	U	6.2	U	6.6	U	6.6	U
1,4-Dichlorobenzene	ug/kg	6.5	U	6.2	U	6.6	U	6.6	U
2-Chloroethyl vinyl ether	ug/kg	13	U	12.4	U	13.1	U	13.2	UJ
2-Hexanone	ug/kg	13	U	12.4	U	13.1	U	13.2	UJ
Acetone	ug/kg	13	UJ	12.4	UJ	12.4	J	13.2	UJ
Benzene	ug/kg	6.5	U	6.2	U	6.6	U	6.6	U
Bromodichloromethane	ug/kg	6.5	U	6.2	U	6.6	U	6.6	U
Bromoform	ug/kg	6.5	U	6.2	U	6.6	U	6.6	U
Bromomethane	ug/kg	13	U	12.4	U	13.1	U	13.2	U
Carbon Disulfide	ug/kg	6.5	U	6.2	U	6.6	U	6.6	U
Carbon Tetrachloride	ug/kg	6.5	U	6.2	U	6.6	U	6.6	U
Chlorobenzene	ug/kg	6.5	U	6.2	U	6.6	U	6.6	U
Chloroethane	ug/kg	13	U	12.4	U	13.1	U	13.2	U
Chloroform	ug/kg	6.5	U	6.2	U	6.6	U	6.6	U
Chloromethane	ug/kg	13	U	12.4	U	13.1	U	13.2	UJ
cis-1,2-Dichloroethylene	ug/kg	6.5	U	6.2	U	6.6	U	6.6	U
cis-1,3-Dichloropropene	ug/kg	6.5	U	6.2	U	6.6	U	6.6	U
Dibromochloromethane	ug/kg	6.5	U	6.2	U	6.6	U	6.6	U
Ethylbenzene	ug/kg	6.5	U	6.2	U	6.6	U	6.6	U

	StationID	H197SB005		H197SB005		H198SB001		H198SB001	
	SampleID	197SB00501 (0-1ft)		197SB00502 (3-5ft)		198SB00101 (0-1ft)		198SB00102 (3-5ft)	
	DateCollected	05/13/2004 14:50		05/13/2004 14:55		05/13/2004 15:15		05/13/2004 15:20	
	DateAnalyzed	25-May-04		24-May-04		25-May-04		25-May-04	
	DateExtracted	05/13/2004		05/13/2004		05/13/2004		05/13/2004	
	SDGNumber	112925		112925		112925		112925	
1,1,1-Trichloroethane	ug/kg	7.8	U	6.6	U	6.7	U	6.2	U
1,1,2,2-Tetrachloroethane	ug/kg	7.8	U	6.6	U	6.7	U	6.2	U
1,1,2-Trichloroethane	ug/kg	7.8	U	6.6	U	6.7	U	6.2	U
1,1-Dichloroethane	ug/kg	7.8	U	6.6	U	6.7	U	6.2	U
1,1-Dichloroethene	ug/kg	7.8	U	6.6	U	6.7	U	6.2	U
1,2,3-Trichlorobenzene	ug/kg	7.8	U	6.6	UJ	6.7	U	6.2	U
1,2,4-Trichlorobenzene	ug/kg	7.8	U	6.6	UJ	6.7	U	6.2	U
1,2-Dichlorobenzene	ug/kg	7.8	U	6.6	U	6.7	U	6.2	U
1,2-Dichloroethane	ug/kg	7.8	U	6.6	U	6.7	U	6.2	U
1,2-Dichloroethene (total)	ug/kg	7.8	U	6.6	U	6.7	U	6.2	U
1,2-Dichloropropane	ug/kg	7.8	U	6.6	U	6.7	U	6.2	U
1,3-Dichlorobenzene	ug/kg	7.8	U	6.6	U	6.7	U	6.2	U
1,4-Dichlorobenzene	ug/kg	7.8	U	6.6	U	6.7	U	6.2	U
2-Chloroethyl vinyl ether	ug/kg	15.5	UJ	13.2	U	13.5	UJ	12.4	UJ
2-Hexanone	ug/kg	15.5	UJ	13.2	U	13.5	UJ	12.4	UJ
Acetone	ug/kg	22.5	J	13.2	UJ	5.5	J	12.4	UJ
Benzene	ug/kg	7.8	U	6.6	U	6.7	U	6.2	U
Bromodichloromethane	ug/kg	7.8	U	6.6	U	6.7	U	6.2	U
Bromoform	ug/kg	7.8	U	6.6	U	6.7	U	6.2	U
Bromomethane	ug/kg	15.5	U	13.2	U	13.5	U	12.4	U
Carbon Disulfide	ug/kg	7.8	U	6.6	U	6.7	U	6.2	U
Carbon Tetrachloride	ug/kg	7.8	U	6.6	U	6.7	U	6.2	U
Chlorobenzene	ug/kg	7.8	U	6.6	U	6.7	U	6.2	U
Chloroethane	ug/kg	15.5	U	13.2	U	13.5	U	12.4	U
Chloroform	ug/kg	7.8	U	6.6	U	6.7	U	6.2	U
Chloromethane	ug/kg	15.5	UJ	13.2	U	13.5	UJ	12.4	UJ
cis-1,2-Dichloroethylene	ug/kg	7.8	U	6.6	U	6.7	U	6.2	U
cis-1,3-Dichloropropene	ug/kg	7.8	U	6.6	U	6.7	U	6.2	U
Dibromochloromethane	ug/kg	7.8	U	6.6	U	6.7	U	6.2	U
Ethylbenzene	ug/kg	7.8	U	6.6	U	6.7	U	6.2	U

	StationID	H198SB002		H198SB002		H198SB003		H198SB003	
	SampleID	198SB00201 (0-1ft)		198SB00202 (3-5ft)		198SB00301 (0-1ft)		198SB00302 (3-5ft)	
	DateCollected	05/13/2004 15:25		05/13/2004 15:35		05/13/2004 15:45		05/13/2004 15:50	
	DateAnalyzed	25-May-04		25-May-04		25-May-04		25-May-04	
	DateExtracted	05/13/2004		05/13/2004		05/13/2004		05/13/2004	
	SDGNumber	112925		112925		112925		112925	
1,1,1-Trichloroethane	ug/kg	6.4	U	6.8	U	6.7	U	6.7	U
1,1,2,2-Tetrachloroethane	ug/kg	6.4	U	6.8	U	6.7	U	6.7	U
1,1,2-Trichloroethane	ug/kg	6.4	U	6.8	U	6.7	U	6.7	U
1,1-Dichloroethane	ug/kg	6.4	U	6.8	U	6.7	U	6.7	U
1,1-Dichloroethene	ug/kg	6.4	U	6.8	U	6.7	U	0.67	J
1,2,3-Trichlorobenzene	ug/kg	6.4	U	6.8	U	6.7	U	6.7	U
1,2,4-Trichlorobenzene	ug/kg	6.4	U	6.8	U	6.7	U	6.7	U
1,2-Dichlorobenzene	ug/kg	6.4	U	6.8	U	6.7	U	6.7	U
1,2-Dichloroethane	ug/kg	6.4	U	6.8	U	6.7	U	6.7	U
1,2-Dichloroethene (total)	ug/kg	6.4	U	6.8	U	6.7	U	6.7	U
1,2-Dichloropropane	ug/kg	6.4	U	6.8	U	6.7	U	6.7	U
1,3-Dichlorobenzene	ug/kg	6.4	U	6.8	U	6.7	U	6.7	U
1,4-Dichlorobenzene	ug/kg	6.4	U	6.8	U	6.7	U	6.7	U
2-Chloroethyl vinyl ether	ug/kg	12.8	UJ	13.6	UJ	13.4	UJ	13.4	UJ
2-Hexanone	ug/kg	12.8	UJ	13.6	UJ	13.4	UJ	13.4	UJ
Acetone	ug/kg	11	J	13.6	UJ	18	J	13.4	UJ
Benzene	ug/kg	6.4	U	6.8	U	6.7	U	6.7	U
Bromodichloromethane	ug/kg	6.4	U	6.8	U	6.7	U	6.7	U
Bromoform	ug/kg	6.4	U	6.8	U	6.7	U	6.7	U
Bromomethane	ug/kg	12.8	U	13.6	U	13.4	U	13.4	U
Carbon Disulfide	ug/kg	6.4	U	6.8	U	6.7	U	6.7	U
Carbon Tetrachloride	ug/kg	6.4	U	6.8	U	6.7	U	6.7	U
Chlorobenzene	ug/kg	6.4	U	6.8	U	6.7	U	6.7	U
Chloroethane	ug/kg	12.8	U	13.6	U	13.4	U	13.4	U
Chloroform	ug/kg	6.4	U	6.8	U	6.7	U	6.7	U
Chloromethane	ug/kg	12.8	UJ	13.6	UJ	13.4	UJ	13.4	UJ
cis-1,2-Dichloroethylene	ug/kg	6.4	U	6.8	U	6.7	U	6.7	U
cis-1,3-Dichloropropene	ug/kg	6.4	U	6.8	U	6.7	U	6.7	U
Dibromochloromethane	ug/kg	6.4	U	6.8	U	6.7	U	6.7	U
Ethylbenzene	ug/kg	6.4	U	6.8	U	6.7	U	6.7	U

	StationID	H198SB004		H198SB004		H198SB004	
	SampleID	198CB00402 (3-5ft)		198SB00401 (0-1ft)		198SB00402 (3-5ft)	
	DateCollected	05/13/2004 16:05		05/13/2004 16:00		05/13/2004 16:05	
	DateAnalyzed	25-May-04		25-May-04		25-May-04	
	DateExtracted	05/13/2004		05/13/2004		05/13/2004	
	SDGNumber	112925		112925		112925	
1,1,1-Trichloroethane	ug/kg	7	U	6.8	U	6.8	U
1,1,2,2-Tetrachloroethane	ug/kg	7	U	6.8	U	6.8	U
1,1,2-Trichloroethane	ug/kg	7	U	6.8	U	6.8	U
1,1-Dichloroethane	ug/kg	7	U	6.8	U	6.8	U
1,1-Dichloroethene	ug/kg	7	U	6.8	U	6.8	U
1,2,3-Trichlorobenzene	ug/kg	7	U	6.8	U	6.8	U
1,2,4-Trichlorobenzene	ug/kg	7	U	6.8	U	6.8	U
1,2-Dichlorobenzene	ug/kg	7	U	6.8	U	6.8	U
1,2-Dichloroethane	ug/kg	7	U	6.8	U	6.8	U
1,2-Dichloroethene (total)	ug/kg	7	U	6.8	U	6.8	U
1,2-Dichloropropane	ug/kg	7	U	6.8	U	6.8	U
1,3-Dichlorobenzene	ug/kg	7	U	6.8	U	6.8	U
1,4-Dichlorobenzene	ug/kg	7	U	6.8	U	6.8	U
2-Chloroethyl vinyl ether	ug/kg	14	UJ	13.5	UJ	13.6	UJ
2-Hexanone	ug/kg	14	UJ	13.5	UJ	13.6	UJ
Acetone	ug/kg	14	UJ	18.8	J	13.6	UJ
Benzene	ug/kg	7	U	6.8	U	6.8	U
Bromodichloromethane	ug/kg	7	U	6.8	U	6.8	U
Bromoform	ug/kg	7	U	6.8	U	6.8	U
Bromomethane	ug/kg	14	U	13.5	U	13.6	U
Carbon Disulfide	ug/kg	7	U	6.8	U	6.8	U
Carbon Tetrachloride	ug/kg	7	U	6.8	U	6.8	U
Chlorobenzene	ug/kg	7	U	6.8	U	6.8	U
Chloroethane	ug/kg	14	U	13.5	U	13.6	U
Chloroform	ug/kg	7	U	6.8	U	6.8	U
Chloromethane	ug/kg	14	UJ	13.5	UJ	13.6	UJ
cis-1,2-Dichloroethylene	ug/kg	7	U	6.8	U	6.8	U
cis-1,3-Dichloropropene	ug/kg	7	U	6.8	U	6.8	U
Dibromochloromethane	ug/kg	7	U	6.8	U	6.8	U
Ethylbenzene	ug/kg	7	U	6.8	U	6.8	U

	StationID	H197SB001		H197SB001		H197SB002		H197SB002	
	SampleID	197SB00101 (0-1ft)		197SB00102 (3-5ft)		197SB00201 (0-1ft)		197SB00202 (3-5ft)	
	DateCollected	05/13/2004 13:45		05/13/2004 13:50		05/13/2004 14:00		05/13/2004 14:05	
	DateAnalyzed	24-May-04		24-May-04		24-May-04		25-May-04	
	DateExtracted	05/13/2004		05/13/2004		05/13/2004		05/13/2004	
	SDGNumber	112925		112925		112925		112925	
m+p Xylene	ug/kg	6.5	U	6.4	U	6.4	U	6.5	U
Methyl ethyl ketone (2-Butanone)	ug/kg	12.9	U	12.8	U	12.7	U	13	U
Methyl isobutyl ketone (4-Methyl-2-pentanone)	ug/kg	12.9	U	12.8	U	12.7	U	13	U
Methylene Chloride	ug/kg	6.5	U	6.4	U	6.4	U	6.5	U
o-Xylene	ug/kg	6.5	U	6.4	U	6.4	U	6.5	U
Styrene	ug/kg	6.5	U	6.4	U	6.4	U	6.5	U
Tetrachloroethylene (PCE)	ug/kg	6.5	U	6.4	U	0.99	J	1.3	J
Toluene	ug/kg	6.5	U	6.4	U	6.4	U	6.5	U
trans-1,2-Dichloroethene	ug/kg	6.5	U	6.4	U	6.4	U	6.5	U
trans-1,3-Dichloropropene	ug/kg	6.5	U	6.4	U	6.4	U	6.5	U
Trichloroethylene (TCE)	ug/kg	6.5	U	6.4	U	6.4	U	6.5	U
Vinyl acetate	ug/kg	12.9	U	12.8	U	12.7	U	13	U
Vinyl chloride	ug/kg	12.9	U	12.8	U	12.7	U	13	U
Xylenes, Total	ug/kg	6.5	U	6.4	U	6.4	U	6.5	U

	StationID	H197SB003		H197SB003		H197SB004		H197SB004	
	SampleID	197SB00301 (0-1ft)		197SB00302 (3-5ft)		197SB00401 (0-1ft)		197SB00402 (3-5ft)	
	DateCollected	05/13/2004 14:15		05/13/2004 14:20		05/13/2004 14:30		05/13/2004 14:35	
	DateAnalyzed	25-May-04		25-May-04		25-May-04		25-May-04	
	DateExtracted	05/13/2004		05/13/2004		05/13/2004		05/13/2004	
	SDGNumber	112925		112925		112925		112925	
m+p Xylene	ug/kg	6.5	U	6.2	U	6.6	U	6.6	U
Methyl ethyl ketone (2-Butanone)	ug/kg	13	U	12.4	U	13.1	U	13.2	UJ
Methyl isobutyl ketone (4-Methyl-2-pentanone)	ug/kg	13	U	12.4	U	13.1	U	13.2	U
Methylene Chloride	ug/kg	6.5	U	6.2	U	6.6	U	6.6	U
o-Xylene	ug/kg	6.5	U	6.2	U	6.6	U	6.6	U
Styrene	ug/kg	6.5	U	6.2	U	6.6	U	6.6	U
Tetrachloroethylene (PCE)	ug/kg	6.5	U	6.2	U	6.6	U	6.6	U
Toluene	ug/kg	6.5	U	6.2	U	6.6	U	6.6	U
trans-1,2-Dichloroethene	ug/kg	6.5	U	6.2	U	6.6	U	6.6	U
trans-1,3-Dichloropropene	ug/kg	6.5	U	6.2	U	6.6	U	6.6	U
Trichloroethylene (TCE)	ug/kg	6.5	U	6.2	U	6.6	U	6.6	U
Vinyl acetate	ug/kg	13	U	12.4	U	13.1	U	13.2	UJ
Vinyl chloride	ug/kg	13	U	12.4	U	13.1	U	13.2	U
Xylenes, Total	ug/kg	6.5	U	6.2	U	6.6	U	6.6	U

StationID		H197SB005		H197SB005		H198SB001		H198SB001	
SampleID		197SB00501 (0-1ft)		197SB00502 (3-5ft)		198SB00101 (0-1ft)		198SB00102 (3-5ft)	
DateCollected		05/13/2004 14:50		05/13/2004 14:55		05/13/2004 15:15		05/13/2004 15:20	
DateAnalyzed		25-May-04		24-May-04		25-May-04		25-May-04	
DateExtracted		05/13/2004		05/13/2004		05/13/2004		05/13/2004	
SDGNumber		112925		112925		112925		112925	
m+p Xylene	ug/kg	7.8	U	6.6	U	6.7	U	6.2	U
Methyl ethyl ketone (2-Butanone)	ug/kg	15.5	UJ	13.2	U	13.5	UJ	12.4	UJ
Methyl isobutyl ketone (4-Methyl-2-pentanone)	ug/kg	15.5	U	13.2	U	13.5	U	12.4	U
Methylene Chloride	ug/kg	7.8	U	6.6	U	6.7	U	6.2	U
o-Xylene	ug/kg	7.8	U	6.6	U	6.7	U	6.2	U
Styrene	ug/kg	7.8	U	6.6	U	6.7	U	6.2	U
Tetrachloroethylene (PCE)	ug/kg	7.8	U	6.6	U	6.7	U	6.2	U
Toluene	ug/kg	7.8	U	6.6	U	6.7	U	6.2	U
trans-1,2-Dichloroethene	ug/kg	7.8	U	6.6	U	6.7	U	6.2	U
trans-1,3-Dichloropropene	ug/kg	7.8	U	6.6	U	6.7	U	6.2	U
Trichloroethylene (TCE)	ug/kg	7.8	U	6.6	U	6.7	U	6.2	U
Vinyl acetate	ug/kg	15.5	UJ	13.2	UJ	13.5	UJ	12.4	UJ
Vinyl chloride	ug/kg	15.5	U	13.2	U	13.5	U	12.4	U
Xylenes, Total	ug/kg	7.8	U	6.6	U	6.7	U	6.2	U

	StationID	H198SB002		H198SB002		H198SB003		H198SB003	
	SampleID	198SB00201 (0-1ft)		198SB00202 (3-5ft)		198SB00301 (0-1ft)		198SB00302 (3-5ft)	
	DateCollected	05/13/2004 15:25		05/13/2004 15:35		05/13/2004 15:45		05/13/2004 15:50	
	DateAnalyzed	25-May-04		25-May-04		25-May-04		25-May-04	
	DateExtracted	05/13/2004		05/13/2004		05/13/2004		05/13/2004	
	SDGNumber	112925		112925		112925		112925	
m+p Xylene	ug/kg	6.4	U	6.8	U	6.7	U	6.7	U
Methyl ethyl ketone (2-Butanone)	ug/kg	12.8	UJ	13.6	UJ	13.4	UJ	13.4	UJ
Methyl isobutyl ketone (4-Methyl-2-pentanone)	ug/kg	12.8	U	13.6	U	13.4	U	13.4	U
Methylene Chloride	ug/kg	6.4	U	6.8	U	6.7	U	6.7	U
o-Xylene	ug/kg	6.4	U	6.8	U	6.7	U	6.7	U
Styrene	ug/kg	6.4	U	6.8	U	6.7	U	6.7	U
Tetrachloroethylene (PCE)	ug/kg	6.4	U	6.8	U	6.7	U	6.7	U
Toluene	ug/kg	6.4	U	6.8	U	6.7	U	6.7	U
trans-1,2-Dichloroethene	ug/kg	6.4	U	6.8	U	6.7	U	6.7	U
trans-1,3-Dichloropropene	ug/kg	6.4	U	6.8	U	6.7	U	6.7	U
Trichloroethylene (TCE)	ug/kg	6.4	U	6.8	U	6.7	U	6.7	U
Vinyl acetate	ug/kg	12.8	UJ	13.6	UJ	13.4	UJ	13.4	UJ
Vinyl chloride	ug/kg	12.8	U	13.6	U	13.4	U	13.4	U
Xylenes, Total	ug/kg	6.4	U	6.8	U	6.7	U	6.7	U

	StationID	H198SB004		H198SB004		H198SB004	
	SampleID	198CB00402 (3-5ft)		198SB00401 (0-1ft)		198SB00402 (3-5ft)	
	DateCollected	05/13/2004 16:05		05/13/2004 16:00		05/13/2004 16:05	
	DateAnalyzed	25-May-04		25-May-04		25-May-04	
	DateExtracted	05/13/2004		05/13/2004		05/13/2004	
	SDGNumber	112925		112925		112925	
m+p Xylene	ug/kg	7	U	6.8	U	6.8	U
Methyl ethyl ketone (2-Butanone)	ug/kg	14	UJ	13.5	UJ	13.6	UJ
Methyl isobutyl ketone (4-Methyl-2-pentanone)	ug/kg	14	U	13.5	U	13.6	U
Methylene Chloride	ug/kg	7	U	6.8	U	6.8	U
o-Xylene	ug/kg	7	U	6.8	U	6.8	U
Styrene	ug/kg	7	U	6.8	U	6.8	U
Tetrachloroethylene (PCE)	ug/kg	7	U	6.8	U	6.8	U
Toluene	ug/kg	7	U	6.8	U	6.8	U
trans-1,2-Dichloroethene	ug/kg	7	U	6.8	U	6.8	U
trans-1,3-Dichloropropene	ug/kg	7	U	6.8	U	6.8	U
Trichloroethylene (TCE)	ug/kg	7	U	6.8	U	6.8	U
Vinyl acetate	ug/kg	14	UJ	13.5	UJ	13.6	UJ
Vinyl chloride	ug/kg	14	U	13.5	U	13.6	U
Xylenes, Total	ug/kg	7	U	6.8	U	6.8	U

Analytical Data Summary

		StationID	H197SB001		H197SB001		H197SB002		H197SB002	
		SampleID	197SB00101 (0-1ft)		197SB00102 (3-5ft)		197SB00201 (0-1ft)		197SB00202 (3-5ft)	
		DateCollected	05/13/2004 13:45		05/13/2004 13:50		05/13/2004 14:00		05/13/2004 14:05	
		DateAnalyzed	27-May-04		27-May-04		27-May-04		27-May-04	
		DateExtracted	05/26/2004		05/26/2004		05/26/2004		05/26/2004	
		SDGNumber	112925		112925		112925		112925	
2,4,5-Trichlorophenol	ug/kg		1740	U	1760	U	1750	U	1790	U
2,4,6-Trichlorophenol	ug/kg		359	U	364	U	362	U	370	U
2,4-Dichlorophenol	ug/kg		359	U	364	U	362	U	370	U
2,4-Dimethylphenol	ug/kg		359	U	364	U	362	U	370	U
2,4-Dinitrophenol	ug/kg		1740	U	1760	U	1750	U	1790	U
2,4-Dinitrotoluene	ug/kg		326	U	331	U	329	U	336	U
2,6-Dinitrotoluene	ug/kg		359	U	364	U	362	U	370	U
2-Chloronaphthalene	ug/kg		359	U	364	U	362	U	370	U
2-Chlorophenol	ug/kg		359	U	364	U	362	U	370	U
2-Methylnaphthalene	ug/kg		359	U	364	U	362	U	370	U
2-Methylphenol (o-Cresol)	ug/kg		359	U	364	U	362	U	370	U
2-Nitroaniline	ug/kg		1740	U	1760	U	1750	U	1790	U
2-Nitrophenol	ug/kg		359	U	364	U	362	U	370	U
3,3'-Dichlorobenzidine	ug/kg		718	U	727	U	723	U	738	U
3-Methylphenol/4-Methylphenol (mp-Cresol)	ug/kg		359	U	364	U	362	U	370	U
3-Nitroaniline	ug/kg		1740	R	1760	R	1750	R	1790	R
4,6-Dinitro-2-methylphenol	ug/kg		1740	U	1760	U	1750	U	1790	U
4-Bromophenyl Phenyl Ether	ug/kg		359	U	364	U	362	U	370	U
4-Chloro-3-methylphenol	ug/kg		326	U	331	U	329	U	336	U
4-Chloroaniline	ug/kg		359	U	364	U	362	U	370	U
4-Chlorophenyl Phenyl Ether	ug/kg		359	U	364	U	362	U	370	U
4-Nitroaniline	ug/kg		1740	U	1760	U	1750	U	1790	U
4-Nitrophenol	ug/kg		1740	U	1760	U	1750	U	1790	U
Acenaphthene	ug/kg		326	U	331	U	329	U	336	U
Acenaphthylene	ug/kg		359	U	364	U	362	U	19.2	J
Anthracene	ug/kg		359	U	364	U	362	U	370	U
Benzo(a)Anthracene	ug/kg		359	U	364	U	362	U	370	U
Benzo(a)Pyrene	ug/kg		96.4	J	364	U	362	U	370	U
Benzo(b)Fluoranthene	ug/kg		29.7	J	364	U	362	U	370	U
Benzo(g,h,i)Perylene	ug/kg		359	U	364	U	362	U	370	U

	StationID	H197SB003		H197SB003		H197SB004		H197SB004	
	SampleID	197SB00301 (0-1ft)		197SB00302 (3-5ft)		197SB00401 (0-1ft)		197SB00402 (3-5ft)	
	DateCollected	05/13/2004 14:15		05/13/2004 14:20		05/13/2004 14:30		05/13/2004 14:35	
	DateAnalyzed	27-May-04		27-May-04		27-May-04		27-May-04	
	DateExtracted	05/26/2004		05/26/2004		05/26/2004		05/26/2004	
	SDGNumber	112925		112925		112925		112925	
2,4,5-Trichlorophenol	ug/kg	1660	U	1750	U	1720	U	1860	U
2,4,6-Trichlorophenol	ug/kg	343	U	361	U	355	U	385	U
2,4-Dichlorophenol	ug/kg	343	U	361	U	355	U	385	U
2,4-Dimethylphenol	ug/kg	343	U	361	U	355	U	385	U
2,4-Dinitrophenol	ug/kg	1660	U	1750	U	1720	U	1860	U
2,4-Dinitrotoluene	ug/kg	312	U	328	U	323	U	350	U
2,6-Dinitrotoluene	ug/kg	343	U	361	U	355	U	385	U
2-Chloronaphthalene	ug/kg	343	U	361	U	355	U	385	U
2-Chlorophenol	ug/kg	343	U	361	U	355	U	385	U
2-Methylnaphthalene	ug/kg	343	U	361	U	355	U	385	U
2-Methylphenol (o-Cresol)	ug/kg	343	U	361	U	355	U	385	U
2-Nitroaniline	ug/kg	1660	U	1750	U	1720	U	1860	U
2-Nitrophenol	ug/kg	343	U	361	U	355	U	385	U
3,3'-Dichlorobenzidine	ug/kg	684	U	721	U	709	U	770	U
3-Methylphenol/4-Methylphenol (mp-Cresol)	ug/kg	343	U	361	U	355	U	385	U
3-Nitroaniline	ug/kg	1660	R	1750	R	1720	R	1860	R
4,6-Dinitro-2-methylphenol	ug/kg	1660	U	1750	U	1720	U	1860	U
4-Bromophenyl Phenyl Ether	ug/kg	343	U	361	U	355	U	385	U
4-Chloro-3-methylphenol	ug/kg	312	U	328	U	323	U	350	U
4-Chloroaniline	ug/kg	343	U	361	U	355	U	385	U
4-Chlorophenyl Phenyl Ether	ug/kg	343	U	361	U	355	U	385	U
4-Nitroaniline	ug/kg	1660	U	1750	U	1720	U	1860	U
4-Nitrophenol	ug/kg	1660	U	1750	U	1720	U	1860	U
Acenaphthene	ug/kg	312	U	328	U	323	U	350	U
Acenaphthylene	ug/kg	343	U	361	U	355	U	385	U
Anthracene	ug/kg	343	U	361	U	355	U	385	U
Benzo(a)Anthracene	ug/kg	343	U	361	U	355	U	385	U
Benzo(a)Pyrene	ug/kg	343	U	361	U	97.7	J	385	U
Benzo(b)Fluoranthene	ug/kg	343	U	20	J	355	U	385	U
Benzo(g,h,i)Perylene	ug/kg	343	U	361	U	355	U	385	U

StationID		H197SB005		H197SB005		H198SB001		H198SB001	
SampleID		197SB00501 (0-1ft)		197SB00502 (3-5ft)		198SB00101 (0-1ft)		198SB00102 (3-5ft)	
DateCollected		05/13/2004 14:50		05/13/2004 14:55		05/13/2004 15:15		05/13/2004 15:20	
DateAnalyzed		27-May-04		27-May-04		27-May-04		27-May-04	
DateExtracted		05/26/2004		05/26/2004		05/26/2004		05/26/2004	
SDGNumber		112925		112925		112925		112925	
2,4,5-Trichlorophenol	ug/kg	1790	U	1950	U	1730	U	1790	U
2,4,6-Trichlorophenol	ug/kg	369	U	403	U	356	U	369	U
2,4-Dichlorophenol	ug/kg	369	U	403	U	356	U	369	U
2,4-Dimethylphenol	ug/kg	369	U	403	U	356	U	369	U
2,4-Dinitrophenol	ug/kg	1790	U	1950	U	1730	U	1790	U
2,4-Dinitrotoluene	ug/kg	335	U	366	U	324	U	336	U
2,6-Dinitrotoluene	ug/kg	369	U	403	U	356	U	369	U
2-Chloronaphthalene	ug/kg	369	U	403	U	356	U	369	U
2-Chlorophenol	ug/kg	369	U	403	U	356	U	369	U
2-Methylnaphthalene	ug/kg	369	U	403	U	356	U	369	U
2-Methylphenol (o-Cresol)	ug/kg	369	U	403	U	356	U	369	U
2-Nitroaniline	ug/kg	1790	U	1950	U	1730	U	1790	U
2-Nitrophenol	ug/kg	369	U	403	U	356	U	369	U
3,3'-Dichlorobenzidine	ug/kg	737	U	804	U	712	U	738	U
3-Methylphenol/4-Methylphenol (mp-Cresol)	ug/kg	369	U	403	U	356	U	369	U
3-Nitroaniline	ug/kg	1790	R	1950	R	1730	R	1790	R
4,6-Dinitro-2-methylphenol	ug/kg	1790	U	1950	U	1730	U	1790	U
4-Bromophenyl Phenyl Ether	ug/kg	369	U	403	U	356	U	369	U
4-Chloro-3-methylphenol	ug/kg	335	U	366	U	324	U	336	U
4-Chloroaniline	ug/kg	369	U	403	U	356	U	369	U
4-Chlorophenyl Phenyl Ether	ug/kg	369	U	403	U	356	U	369	U
4-Nitroaniline	ug/kg	1790	U	1950	U	1730	U	1790	U
4-Nitrophenol	ug/kg	1790	U	1950	U	1730	U	1790	U
Acenaphthene	ug/kg	335	U	366	U	324	U	336	U
Acenaphthylene	ug/kg	369	U	403	U	356	U	369	U
Anthracene	ug/kg	369	U	403	U	356	U	369	U
Benzo(a)Anthracene	ug/kg	369	U	403	U	356	U	369	U
Benzo(a)Pyrene	ug/kg	369	U	403	U	356	U	369	U
Benzo(b)Fluoranthene	ug/kg	369	U	403	U	356	U	369	U
Benzo(g,h,i)Perylene	ug/kg	369	U	403	U	356	U	369	U

	StationID	H198SB002		H198SB002		H198SB003		H198SB003	
	SampleID	198SB00201 (0-1ft)		198SB00202 (3-5ft)		198SB00301 (0-1ft)		198SB00302 (3-5ft)	
	DateCollected	05/13/2004 15:25		05/13/2004 15:35		05/13/2004 15:45		05/13/2004 15:50	
	DateAnalyzed	27-May-04		27-May-04		27-May-04		27-May-04	
	DateExtracted	05/26/2004		05/26/2004		05/26/2004		05/26/2004	
	SDGNumber	112925		112925		112925		112925	
2,4,5-Trichlorophenol	ug/kg	1680	U	1750	U	1720	U	1800	U
2,4,6-Trichlorophenol	ug/kg	348	U	360	U	355	U	371	U
2,4-Dichlorophenol	ug/kg	348	U	360	U	355	U	371	U
2,4-Dimethylphenol	ug/kg	348	U	360	U	355	U	371	U
2,4-Dinitrophenol	ug/kg	1680	U	1750	U	1720	U	1800	U
2,4-Dinitrotoluene	ug/kg	316	U	328	U	323	U	337	U
2,6-Dinitrotoluene	ug/kg	348	U	360	U	355	U	371	U
2-Chloronaphthalene	ug/kg	348	U	360	U	355	U	371	U
2-Chlorophenol	ug/kg	348	U	360	U	355	U	371	U
2-Methylnaphthalene	ug/kg	348	U	360	U	355	U	371	U
2-Methylphenol (o-Cresol)	ug/kg	348	U	360	U	355	U	371	U
2-Nitroaniline	ug/kg	1680	U	1750	U	1720	U	1800	U
2-Nitrophenol	ug/kg	348	U	360	U	355	U	371	U
3,3'-Dichlorobenzidine	ug/kg	695	U	720	U	709	U	741	U
3-Methylphenol/4-Methylphenol (mp-Cresol)	ug/kg	348	U	360	U	355	U	371	U
3-Nitroaniline	ug/kg	1680	R	1750	R	1720	R	1800	R
4,6-Dinitro-2-methylphenol	ug/kg	1680	U	1750	U	1720	U	1800	U
4-Bromophenyl Phenyl Ether	ug/kg	348	U	360	U	355	U	371	U
4-Chloro-3-methylphenol	ug/kg	316	U	328	U	323	U	337	U
4-Chloroaniline	ug/kg	348	U	360	U	355	U	371	U
4-Chlorophenyl Phenyl Ether	ug/kg	348	U	360	U	355	U	371	U
4-Nitroaniline	ug/kg	1680	U	1750	U	1720	U	1800	U
4-Nitrophenol	ug/kg	1680	U	1750	U	1720	U	1800	U
Acenaphthene	ug/kg	316	U	328	U	323	U	337	U
Acenaphthylene	ug/kg	348	U	33.1	J	355	U	371	U
Anthracene	ug/kg	348	U	360	U	355	U	371	U
Benzo(a)Anthracene	ug/kg	348	U	122	J	355	U	371	U
Benzo(a)Pyrene	ug/kg	348	U	198	J	355	U	371	U
Benzo(b)Fluoranthene	ug/kg	348	U	319	J	355	U	371	U
Benzo(g,h,i)Perylene	ug/kg	348	U	82	J	355	U	371	U

	StationID	H198SB004		H198SB004		H198SB004	
	SampleID	198CB00402 (3-5ft)		198SB00401 (0-1ft)		198SB00402 (3-5ft)	
	DateCollected	05/13/2004 16:05		05/13/2004 16:00		05/13/2004 16:05	
	DateAnalyzed	27-May-04		27-May-04		27-May-04	
	DateExtracted	05/26/2004		05/26/2004		05/26/2004	
	SDGNumber	112925		112925		112925	
2,4,5-Trichlorophenol	ug/kg	1790	U	1690	U	1750	U
2,4,6-Trichlorophenol	ug/kg	370	U	348	U	360	U
2,4-Dichlorophenol	ug/kg	370	U	348	U	360	U
2,4-Dimethylphenol	ug/kg	370	U	348	U	360	U
2,4-Dinitrophenol	ug/kg	1790	U	1690	U	1750	U
2,4-Dinitrotoluene	ug/kg	336	U	317	U	328	U
2,6-Dinitrotoluene	ug/kg	370	U	348	U	360	U
2-Chloronaphthalene	ug/kg	370	U	348	U	360	U
2-Chlorophenol	ug/kg	370	U	348	U	360	U
2-Methylnaphthalene	ug/kg	370	U	348	U	360	U
2-Methylphenol (o-Cresol)	ug/kg	370	U	348	U	360	U
2-Nitroaniline	ug/kg	1790	U	1690	U	1750	U
2-Nitrophenol	ug/kg	370	U	348	U	360	U
3,3'-Dichlorobenzidine	ug/kg	740	U	696	U	720	U
3-Methylphenol/4-Methylphenol (mp-Cresol)	ug/kg	370	U	348	U	360	U
3-Nitroaniline	ug/kg	1790	R	1690	R	1750	R
4,6-Dinitro-2-methylphenol	ug/kg	1790	U	1690	U	1750	U
4-Bromophenyl Phenyl Ether	ug/kg	370	U	348	U	360	U
4-Chloro-3-methylphenol	ug/kg	336	U	317	U	328	U
4-Chloroaniline	ug/kg	370	U	348	U	360	U
4-Chlorophenyl Phenyl Ether	ug/kg	370	U	348	U	360	U
4-Nitroaniline	ug/kg	1790	U	1690	U	1750	U
4-Nitrophenol	ug/kg	1790	U	1690	U	1750	U
Acenaphthene	ug/kg	336	U	317	U	328	U
Acenaphthylene	ug/kg	370	U	348	U	360	U
Anthracene	ug/kg	370	U	348	U	360	U
Benzo(a)Anthracene	ug/kg	370	U	348	U	360	U
Benzo(a)Pyrene	ug/kg	370	U	348	U	360	U
Benzo(b)Fluoranthene	ug/kg	370	U	348	U	360	U
Benzo(g,h,i)Perylene	ug/kg	370	U	348	U	360	U

StationID		H197SB001		H197SB001		H197SB002		H197SB002	
SampleID		197SB00101 (0-1ft)		197SB00102 (3-5ft)		197SB00201 (0-1ft)		197SB00202 (3-5ft)	
DateCollected		05/13/2004 13:45		05/13/2004 13:50		05/13/2004 14:00		05/13/2004 14:05	
DateAnalyzed		27-May-04		27-May-04		27-May-04		27-May-04	
DateExtracted		05/26/2004		05/26/2004		05/26/2004		05/26/2004	
SDGNumber		112925		112925		112925		112925	
Benzo(k)Fluoranthene	ug/kg	359	U	364	U	362	U	370	U
Benzoic acid	ug/kg	1740	U	1760	U	1750	U	389	J
Benzyl alcohol	ug/kg	359	U	364	U	362	U	370	U
Benzyl Butyl Phthalate	ug/kg	359	U	364	U	362	U	370	U
bis(2-Chloroethoxy) Methane	ug/kg	359	U	364	U	362	U	370	U
bis(2-Chloroethyl) ether (2-Chloroethyl Ether)	ug/kg	359	U	364	U	362	U	370	U
Bis(2-Chloroisopropyl)Ether	ug/kg	359	U	364	U	362	U	370	U
bis(2-Ethylhexyl) Phthalate	ug/kg	359	U	364	U	362	U	370	U
Carbazole	ug/kg	359	U	364	U	362	U	370	U
Chrysene	ug/kg	359	U	364	U	362	U	370	U
Di-n-butyl Phthalate	ug/kg	359	U	364	U	362	U	370	U
Di-n-octylphthalate	ug/kg	359	U	364	U	362	U	370	U
Dibenz(a,h)anthracene	ug/kg	359	U	364	U	362	U	370	U
Dibenzofuran	ug/kg	359	U	364	U	362	U	370	U
Diethyl Phthalate	ug/kg	359	U	364	U	362	U	370	U
Dimethyl Phthalate	ug/kg	359	U	364	U	362	U	370	U
Diphenylamine	ug/kg	359	U	364	U	362	U	370	U
Fluoranthene	ug/kg	24.5	J	364	U	362	U	370	U
Fluorene	ug/kg	359	U	364	U	362	U	370	U
Hexachlorobenzene	ug/kg	359	U	364	U	362	U	370	U
Hexachlorobutadiene	ug/kg	359	U	364	U	362	U	370	U
Hexachlorocyclopentadiene	ug/kg	359	U	364	U	362	U	370	U
Hexachloroethane	ug/kg	359	U	364	U	362	U	370	U
Indeno(1,2,3-c,d)pyrene	ug/kg	47	J	364	U	362	U	370	U
Isophorone	ug/kg	359	U	364	U	362	U	370	U
N-Nitrosodi-n-propylamine	ug/kg	359	U	364	U	362	U	370	U
Naphthalene	ug/kg	359	U	364	U	362	U	370	U
Nitrobenzene	ug/kg	359	U	364	U	362	U	370	U
Pentachlorophenol	ug/kg	1740	U	1760	U	1750	U	1790	U
Phenanthrene	ug/kg	359	U	364	U	362	U	370	U

	StationID	H197SB003		H197SB003		H197SB004		H197SB004	
	SampleID	197SB00301 (0-1ft)		197SB00302 (3-5ft)		197SB00401 (0-1ft)		197SB00402 (3-5ft)	
	DateCollected	05/13/2004 14:15		05/13/2004 14:20		05/13/2004 14:30		05/13/2004 14:35	
	DateAnalyzed	27-May-04		27-May-04		27-May-04		27-May-04	
	DateExtracted	05/26/2004		05/26/2004		05/26/2004		05/26/2004	
	SDGNumber	112925		112925		112925		112925	
Benzo(k)Fluoranthene	ug/kg	343	U	361	U	33.1	J	385	U
Benzoic acid	ug/kg	1660	U	1750	U	1720	U	1860	U
Benzyl alcohol	ug/kg	343	U	361	U	355	U	385	U
Benzyl Butyl Phthalate	ug/kg	343	U	361	U	355	U	385	U
bis(2-Chloroethoxy) Methane	ug/kg	343	U	361	U	355	U	385	U
bis(2-Chloroethyl) ether (2-Chloroethyl Ether)	ug/kg	343	U	361	U	355	U	385	U
Bis(2-Chloroisopropyl)Ether	ug/kg	343	U	361	U	355	U	385	U
bis(2-Ethylhexyl) Phthalate	ug/kg	343	U	361	U	466	U	385	U
Carbazole	ug/kg	343	U	361	U	29	J	385	U
Chrysene	ug/kg	343	U	361	U	355	U	385	U
Di-n-butyl Phthalate	ug/kg	343	U	361	U	29.7	J	385	U
Di-n-octylphthalate	ug/kg	343	U	361	U	355	U	385	U
Dibenz(a,h)anthracene	ug/kg	343	U	361	U	355	U	385	U
Dibenzofuran	ug/kg	343	U	361	U	355	U	385	U
Diethyl Phthalate	ug/kg	343	U	361	U	355	U	385	U
Dimethyl Phthalate	ug/kg	343	U	361	U	355	U	385	U
Diphenylamine	ug/kg	343	U	361	U	355	U	385	U
Fluoranthene	ug/kg	343	U	37.2	J	26.3	J	385	U
Fluorene	ug/kg	343	U	361	U	355	U	385	U
Hexachlorobenzene	ug/kg	343	U	361	U	355	U	385	U
Hexachlorobutadiene	ug/kg	343	U	361	U	355	U	385	U
Hexachlorocyclopentadiene	ug/kg	343	U	361	U	355	U	385	U
Hexachloroethane	ug/kg	343	U	361	U	355	U	385	U
Indeno(1,2,3-c,d)pyrene	ug/kg	343	U	361	U	50.9	J	385	U
Isophorone	ug/kg	343	U	361	U	355	U	385	U
N-Nitrosodi-n-propylamine	ug/kg	343	U	361	U	355	U	385	U
Naphthalene	ug/kg	343	U	361	U	355	U	385	U
Nitrobenzene	ug/kg	343	U	361	U	355	U	385	U
Pentachlorophenol	ug/kg	1660	U	1750	U	1720	U	1860	U
Phenanthrene	ug/kg	343	U	361	U	355	U	385	U

	StationID	H197SB005		H197SB005		H198SB001		H198SB001	
	SampleID	197SB00501 (0-1ft)		197SB00502 (3-5ft)		198SB00101 (0-1ft)		198SB00102 (3-5ft)	
	DateCollected	05/13/2004 14:50		05/13/2004 14:55		05/13/2004 15:15		05/13/2004 15:20	
	DateAnalyzed	27-May-04		27-May-04		27-May-04		27-May-04	
	DateExtracted	05/26/2004		05/26/2004		05/26/2004		05/26/2004	
	SDGNumber	112925		112925		112925		112925	
Benzo(k)Fluoranthene	ug/kg	369	U	403	U	356	U	369	U
Benzoic acid	ug/kg	1790	U	1950	U	1730	U	1790	U
Benzyl alcohol	ug/kg	369	U	403	U	356	U	369	U
Benzyl Butyl Phthalate	ug/kg	369	U	403	U	356	U	369	U
bis(2-Chloroethoxy) Methane	ug/kg	369	U	403	U	356	U	369	U
bis(2-Chloroethyl) ether (2-Chloroethyl Ether)	ug/kg	369	U	403	U	356	U	369	U
Bis(2-Chloroisopropyl)Ether	ug/kg	369	U	403	U	356	U	369	U
bis(2-Ethylhexyl) Phthalate	ug/kg	369	U	403	U	356	U	369	U
Carbazole	ug/kg	369	U	403	U	356	U	369	U
Chrysene	ug/kg	369	U	403	U	356	U	369	U
Di-n-butyl Phthalate	ug/kg	369	U	403	U	356	U	41.4	J
Di-n-octylphthalate	ug/kg	369	U	403	U	356	U	369	U
Dibenz(a,h)anthracene	ug/kg	369	U	403	U	356	U	369	U
Dibenzofuran	ug/kg	369	U	403	U	356	U	369	U
Diethyl Phthalate	ug/kg	369	U	403	U	356	U	369	U
Dimethyl Phthalate	ug/kg	369	U	403	U	356	U	369	U
Diphenylamine	ug/kg	369	U	403	U	356	U	369	U
Fluoranthene	ug/kg	19.2	J	403	U	356	U	369	U
Fluorene	ug/kg	369	U	403	U	356	U	369	U
Hexachlorobenzene	ug/kg	369	U	403	U	356	U	369	U
Hexachlorobutadiene	ug/kg	369	U	403	U	356	U	369	U
Hexachlorocyclopentadiene	ug/kg	369	U	403	U	356	U	369	U
Hexachloroethane	ug/kg	369	U	403	U	356	U	369	U
Indeno(1,2,3-c,d)pyrene	ug/kg	369	U	403	U	356	U	369	U
Isophorone	ug/kg	369	U	403	U	356	U	369	U
N-Nitrosodi-n-propylamine	ug/kg	369	U	403	U	356	U	369	U
Naphthalene	ug/kg	369	U	403	U	356	U	369	U
Nitrobenzene	ug/kg	369	U	403	U	356	U	369	U
Pentachlorophenol	ug/kg	1790	U	1950	U	1730	U	1790	U
Phenanthrene	ug/kg	369	U	403	U	356	U	369	U

StationID		H198SB002		H198SB002		H198SB003		H198SB003	
SampleID		198SB00201 (0-1ft)		198SB00202 (3-5ft)		198SB00301 (0-1ft)		198SB00302 (3-5ft)	
DateCollected		05/13/2004 15:25		05/13/2004 15:35		05/13/2004 15:45		05/13/2004 15:50	
DateAnalyzed		27-May-04		27-May-04		27-May-04		27-May-04	
DateExtracted		05/26/2004		05/26/2004		05/26/2004		05/26/2004	
SDGNumber		112925		112925		112925		112925	
Benzo(k)Fluoranthene	ug/kg	348	U	360	U	355	U	371	U
Benzoic acid	ug/kg	1680	U	1750	U	1720	U	1800	U
Benzyl alcohol	ug/kg	348	U	360	U	355	U	371	U
Benzyl Butyl Phthalate	ug/kg	348	U	360	U	355	U	371	U
bis(2-Chloroethoxy) Methane	ug/kg	348	U	360	U	355	U	371	U
bis(2-Chloroethyl) ether (2-Chloroethyl Ether)	ug/kg	348	U	360	U	355	U	371	U
Bis(2-Chloroisopropyl)Ether	ug/kg	348	U	360	U	355	U	371	U
bis(2-Ethylhexyl) Phthalate	ug/kg	348	U	360	U	355	U	371	U
Carbazole	ug/kg	348	U	25.7	J	355	U	371	U
Chrysene	ug/kg	348	U	254	J	355	U	371	U
Di-n-butyl Phthalate	ug/kg	348	U	31.6	J	355	U	371	U
Di-n-octylphthalate	ug/kg	348	U	360	U	355	U	371	U
Dibenz(a,h)anthracene	ug/kg	348	U	360	U	355	U	371	U
Dibenzofuran	ug/kg	348	U	360	U	355	U	371	U
Diethyl Phthalate	ug/kg	348	U	360	U	355	U	371	U
Dimethyl Phthalate	ug/kg	348	U	360	U	355	U	371	U
Diphenylamine	ug/kg	348	U	360	U	355	U	371	U
Fluoranthene	ug/kg	348	U	538	=	355	U	371	U
Fluorene	ug/kg	348	U	360	U	355	U	371	U
Hexachlorobenzene	ug/kg	348	U	360	U	355	U	371	U
Hexachlorobutadiene	ug/kg	348	U	360	U	355	U	371	U
Hexachlorocyclopentadiene	ug/kg	348	U	360	U	355	U	371	U
Hexachloroethane	ug/kg	348	U	360	U	355	U	371	U
Indeno(1,2,3-c,d)pyrene	ug/kg	348	U	127	J	355	U	371	U
Isophorone	ug/kg	348	U	360	U	355	U	371	U
N-Nitrosodi-n-propylamine	ug/kg	348	U	360	U	355	U	371	U
Naphthalene	ug/kg	348	U	360	U	355	U	371	U
Nitrobenzene	ug/kg	348	U	360	U	355	U	371	U
Pentachlorophenol	ug/kg	1680	U	186	J	1720	U	1800	U
Phenanthrene	ug/kg	348	U	106	J	355	U	371	U

StationID		H198SB004		H198SB004		H198SB004	
SampleID		198CB00402 (3-5ft)		198SB00401 (0-1ft)		198SB00402 (3-5ft)	
DateCollected		05/13/2004 16:05		05/13/2004 16:00		05/13/2004 16:05	
DateAnalyzed		27-May-04		27-May-04		27-May-04	
DateExtracted		05/26/2004		05/26/2004		05/26/2004	
SDGNumber		112925		112925		112925	
Benzo(k)Fluoranthene	ug/kg	370	U	348	U	360	U
Benzoic acid	ug/kg	1790	U	1690	U	1750	U
Benzyl alcohol	ug/kg	370	U	348	U	360	U
Benzyl Butyl Phthalate	ug/kg	370	U	348	U	360	U
bis(2-Chloroethoxy) Methane	ug/kg	370	U	348	U	360	U
bis(2-Chloroethyl) ether (2-Chloroethyl Ether)	ug/kg	370	U	348	U	360	U
Bis(2-Chloroisopropyl)Ether	ug/kg	370	U	348	U	360	U
bis(2-Ethylhexyl) Phthalate	ug/kg	370	U	348	U	360	U
Carbazole	ug/kg	370	U	348	U	360	U
Chrysene	ug/kg	370	U	348	U	360	U
Di-n-butyl Phthalate	ug/kg	370	U	25.8	J	360	U
Di-n-octylphthalate	ug/kg	370	U	348	U	360	U
Dibenz(a,h)anthracene	ug/kg	370	U	348	U	360	U
Dibenzofuran	ug/kg	370	U	348	U	360	U
Diethyl Phthalate	ug/kg	370	U	348	U	360	U
Dimethyl Phthalate	ug/kg	370	U	348	U	360	U
Diphenylamine	ug/kg	370	U	348	U	360	U
Fluoranthene	ug/kg	370	U	348	U	360	U
Fluorene	ug/kg	370	U	348	U	360	U
Hexachlorobenzene	ug/kg	370	U	348	U	360	U
Hexachlorobutadiene	ug/kg	370	U	348	U	360	U
Hexachlorocyclopentadiene	ug/kg	370	U	348	U	360	U
Hexachloroethane	ug/kg	370	U	348	U	360	U
Indeno(1,2,3-c,d)pyrene	ug/kg	370	U	348	U	360	U
Isophorone	ug/kg	370	U	348	U	360	U
N-Nitrosodi-n-propylamine	ug/kg	370	U	348	U	360	U
Naphthalene	ug/kg	370	U	348	U	360	U
Nitrobenzene	ug/kg	370	U	348	U	360	U
Pentachlorophenol	ug/kg	1790	U	1690	U	1750	U
Phenanthrene	ug/kg	370	U	348	U	360	U

	StationID	H197SB001		H197SB001		H197SB002		H197SB002	
	SampleID	197SB00101 (0-1ft)		197SB00102 (3-5ft)		197SB00201 (0-1ft)		197SB00202 (3-5ft)	
	DateCollected	05/13/2004 13:45		05/13/2004 13:50		05/13/2004 14:00		05/13/2004 14:05	
	DateAnalyzed	27-May-04		27-May-04		27-May-04		27-May-04	
	DateExtracted	05/26/2004		05/26/2004		05/26/2004		05/26/2004	
	SDGNumber	112925		112925		112925		112925	
Phenol	ug/kg	359	U	364	U	362	U	370	U
Pyrene	ug/kg	18.2	J	364	U	362	U	370	U

	StationID	H197SB003		H197SB003		H197SB004		H197SB004	
	SampleID	197SB00301 (0-1ft)		197SB00302 (3-5ft)		197SB00401 (0-1ft)		197SB00402 (3-5ft)	
	DateCollected	05/13/2004 14:15		05/13/2004 14:20		05/13/2004 14:30		05/13/2004 14:35	
	DateAnalyzed	27-May-04		27-May-04		27-May-04		27-May-04	
	DateExtracted	05/26/2004		05/26/2004		05/26/2004		05/26/2004	
	SDGNumber	112925		112925		112925		112925	
Phenol	ug/kg	343	U	361	U	355	U	385	U
Pyrene	ug/kg	343	U	30	J	31.5	J	385	U

	StationID	H197SB005		H197SB005		H198SB001		H198SB001	
	SampleID	197SB00501 (0-1ft)		197SB00502 (3-5ft)		198SB00101 (0-1ft)		198SB00102 (3-5ft)	
	DateCollected	05/13/2004 14:50		05/13/2004 14:55		05/13/2004 15:15		05/13/2004 15:20	
	DateAnalyzed	27-May-04		27-May-04		27-May-04		27-May-04	
	DateExtracted	05/26/2004		05/26/2004		05/26/2004		05/26/2004	
	SDGNumber	112925		112925		112925		112925	
Phenol	ug/kg	369	U	403	U	356	U	369	U
Pyrene	ug/kg	369	U	403	U	356	U	65.4	J

	StationID	H198SB002		H198SB002		H198SB003		H198SB003	
	SampleID	198SB00201 (0-1ft)		198SB00202 (3-5ft)		198SB00301 (0-1ft)		198SB00302 (3-5ft)	
	DateCollected	05/13/2004 15:25		05/13/2004 15:35		05/13/2004 15:45		05/13/2004 15:50	
	DateAnalyzed	27-May-04		27-May-04		27-May-04		27-May-04	
	DateExtracted	05/26/2004		05/26/2004		05/26/2004		05/26/2004	
	SDGNumber	112925		112925		112925		112925	
Phenol	ug/kg	348	U	360	U	355	U	371	U
Pyrene	ug/kg	348	U	473	=	355	U	371	U

	StationID	H198SB004		H198SB004		H198SB004	
	SampleID	198CB00402 (3-5ft)		198SB00401 (0-1ft)		198SB00402 (3-5ft)	
	DateCollected	05/13/2004 16:05		05/13/2004 16:00		05/13/2004 16:05	
	DateAnalyzed	27-May-04		27-May-04		27-May-04	
	DateExtracted	05/26/2004		05/26/2004		05/26/2004	
	SDGNumber	112925		112925		112925	
Phenol	ug/kg	370	U	348	U	360	U
Pyrene	ug/kg	370	U	348	U	360	U

	StationID	H198SB001		H198SB001		H198SB002		H198SB002		H198SB003	
	SampleID	198SB00101 (0-1ft)		198SB00102 (3-5ft)		198SB00201 (0-1ft)		198SB00202 (3-5ft)		198SB00301 (0-1ft)	
	DateCollected	05/13/2004 15:15		05/13/2004 15:20		05/13/2004 15:25		05/13/2004 15:35		05/13/2004 15:45	
	DateAnalyzed	18-May-04		18-May-04		18-May-04		18-May-04		18-May-04	
	DateExtracted	05/17/2004		05/17/2004		05/17/2004		05/17/2004		05/17/2004	
	SDGNumber	112925		112925		112925		112925		112925	
PCB-1016 (Arochlor 1016)	ug/kg	35.6	U	36.9	U	34.7	U	36	U	35.4	U
PCB-1221 (Arochlor 1221)	ug/kg	35.6	U	36.9	U	34.7	U	36	U	35.4	U
PCB-1232 (Arochlor 1232)	ug/kg	35.6	U	36.9	U	34.7	U	36	U	35.4	U
PCB-1242 (Arochlor 1242)	ug/kg	35.6	U	36.9	U	34.7	U	36	U	35.4	U
PCB-1248 (Arochlor 1248)	ug/kg	35.6	U	36.9	U	34.7	U	36	U	35.4	U
PCB-1254 (Arochlor 1254)	ug/kg	11	J	9.6	J	70.5	U	73.1	U	72	U
PCB-1260 (Arochlor 1260)	ug/kg	7.5	J	3.7	J	4.4	J	73.1	U	72	U

Analytical Data Summary

	StationID	H198SB003		H198SB004		H198SB004		H198SB004	
	SampleID	198SB00302 (3-5ft)		198CB00402 (3-5ft)		198SB00401 (0-1ft)		198SB00402 (3-5ft)	
	DateCollected	05/13/2004 15:50		05/13/2004 16:05		05/13/2004 16:00		05/13/2004 16:05	
	DateAnalyzed	18-May-04		18-May-04		18-May-04		18-May-04	
	DateExtracted	05/17/2004		05/17/2004		05/17/2004		05/17/2004	
	SDGNumber	112925		112925		112925		112925	
PCB-1016 (Arochlor 1016)	ug/kg	37.1	U	37	U	34.8	U	36	U
PCB-1221 (Arochlor 1221)	ug/kg	37.1	U	37	U	34.8	U	36	U
PCB-1232 (Arochlor 1232)	ug/kg	37.1	U	37	U	34.8	U	36	U
PCB-1242 (Arochlor 1242)	ug/kg	37.1	U	37	U	34.8	U	36	U
PCB-1248 (Arochlor 1248)	ug/kg	37.1	U	37	U	34.8	U	36	U
PCB-1254 (Arochlor 1254)	ug/kg	75.2	U	75.1	U	40.6	J	73.1	U
PCB-1260 (Arochlor 1260)	ug/kg	75.2	U	75.1	U	14.2	J	73.1	U

	StationID	H197SB001	H197SB001	H197SB001	H197SB001	H197SB002
	SampleID	197SB00101 (0-1ft)	197SB00101 (0-1ft)	197SB00102 (3-5ft)	197SB00102 (3-5ft)	197SB00201 (0-1ft)
	DateCollected	05/13/2004 13:45	05/13/2004 13:45	05/13/2004 13:50	05/13/2004 13:50	05/13/2004 14:00
	DateAnalyzed	21-May-04	26-May-04	21-May-04	26-May-04	21-May-04
	DateExtracted	05/20/2004	05/25/2004	05/20/2004	05/25/2004	05/20/2004
	SDGNumber	112925	112925	112925	112925	112925
Arsenic	mg/kg		3.2 =		2.14 J	
Barium	mg/kg		25.8 J		6.58 U	
Cadmium	mg/kg		0.224 J		0.093 U	
Chromium, Total	mg/kg		9.47 =		6.34 =	
Lead	mg/kg		41.9 =		6.62 =	
Mercury	mg/kg	0.038 J		0.027 J		0.06 J
Selenium	mg/kg		0.405 U		0.411 U	
Silver	mg/kg		0.175 U		0.177 U	

Analytical Data Summary

	StationID	H197SB002		H197SB002		H197SB002		H197SB003		H197SB003	
	SampleID	197SB00201 (0-1ft)		197SB00202 (3-5ft)		197SB00202 (3-5ft)		197SB00301 (0-1ft)		197SB00301 (0-1ft)	
	DateCollected	05/13/2004 14:00		05/13/2004 14:05		05/13/2004 14:05		05/13/2004 14:15		05/13/2004 14:15	
	DateAnalyzed	26-May-04		21-May-04		26-May-04		21-May-04		26-May-04	
	DateExtracted	05/25/2004		05/20/2004		05/25/2004		05/20/2004		05/25/2004	
	SDGNumber	112925		112925		112925		112925		112925	
Arsenic	mg/kg	2.56	=			1.3	J			3.28	=
Barium	mg/kg	14.1	J			7.51	U			18.4	J
Cadmium	mg/kg	3.47	=			0.091	U			3.49	=
Chromium, Total	mg/kg	7.43	=			7.16	=			30.5	=
Lead	mg/kg	138	=			8.73	=			197	=
Mercury	mg/kg			0.016	J			0.005	J		
Selenium	mg/kg	0.404	U			1.2	=			0.589	J
Silver	mg/kg	0.174	U			0.175	U			0.166	U

	StationID	H197SB003	H197SB003	H197SB004	H197SB004	H197SB004
	SampleID	197SB00302 (3-5ft)	197SB00302 (3-5ft)	197SB00401 (0-1ft)	197SB00401 (0-1ft)	197SB00402 (3-5ft)
	DateCollected	05/13/2004 14:20	05/13/2004 14:20	05/13/2004 14:30	05/13/2004 14:30	05/13/2004 14:35
	DateAnalyzed	21-May-04	26-May-04	21-May-04	26-May-04	21-May-04
	DateExtracted	05/20/2004	05/25/2004	05/20/2004	05/25/2004	05/20/2004
	SDGNumber	112925	112925	112925	112925	112925
Arsenic	mg/kg		1.64 J		2.27 =	
Barium	mg/kg		6.62 U		27.6 J	
Cadmium	mg/kg		0.484 J		0.899 J	
Chromium, Total	mg/kg		10 =		9.64 =	
Lead	mg/kg		21 =		69.8 =	
Mercury	mg/kg	0.023 J		0.051 J		0.027 J
Selenium	mg/kg		0.467 J		0.397 U	
Silver	mg/kg		0.175 U		0.171 U	

	StationID	H197SB004		H197SB005		H197SB005		H197SB005		H197SB005	
	SampleID	197SB00402 (3-5ft)		197SB00501 (0-1ft)		197SB00501 (0-1ft)		197SB00502 (3-5ft)		197SB00502 (3-5ft)	
	DateCollected	05/13/2004 14:35		05/13/2004 14:50		05/13/2004 14:50		05/13/2004 14:55		05/13/2004 14:55	
	DateAnalyzed	26-May-04		21-May-04		26-May-04		21-May-04		26-May-04	
	DateExtracted	05/25/2004		05/20/2004		05/25/2004		05/20/2004		05/25/2004	
	SDGNumber	112925		112925		112925		112925		112925	
Arsenic	mg/kg	1.41	J			3.7	=			1.78	J
Barium	mg/kg	12.7	J			16.1	J			20.3	J
Cadmium	mg/kg	0.098	U			0.344	J			0.101	U
Chromium, Total	mg/kg	6.89	=			12.8	=			13	=
Lead	mg/kg	8.32	=			65.2	=			9.01	=
Mercury	mg/kg			0.095	J			0.034	J		
Selenium	mg/kg	0.435	U			0.415	U			0.45	U
Silver	mg/kg	0.188	U			0.179	U			0.194	U

	StationID	H198SB001	H198SB001	H198SB001	H198SB001	H198SB002
	SampleID	198SB00101 (0-1ft)	198SB00101 (0-1ft)	198SB00102 (3-5ft)	198SB00102 (3-5ft)	198SB00201 (0-1ft)
	DateCollected	05/13/2004 15:15	05/13/2004 15:15	05/13/2004 15:20	05/13/2004 15:20	05/13/2004 15:25
	DateAnalyzed	21-May-04	26-May-04	21-May-04	26-May-04	21-May-04
	DateExtracted	05/20/2004	05/25/2004	05/20/2004	05/25/2004	05/20/2004
	SDGNumber	112925	112925	112925	112925	112925
Arsenic	mg/kg		6.08 =		1.72 J	
Barium	mg/kg		12.1 U		10.3 U	
Cadmium	mg/kg		0.656 J		0.093 U	
Chromium, Total	mg/kg		7.62 =		8.78 =	
Lead	mg/kg		11.6 =		4.34 =	
Mercury	mg/kg	0.045 J		0.009 J		0.043 J
Selenium	mg/kg		0.397 U		1.22 =	
Silver	mg/kg		0.171 U		0.178 U	

	StationID	H198SB002		H198SB002		H198SB002		H198SB003		H198SB003	
	SampleID	198SB00201 (0-1ft)		198SB00202 (3-5ft)		198SB00202 (3-5ft)		198SB00301 (0-1ft)		198SB00301 (0-1ft)	
	DateCollected	05/13/2004 15:25		05/13/2004 15:35		05/13/2004 15:35		05/13/2004 15:45		05/13/2004 15:45	
	DateAnalyzed	26-May-04		21-May-04		26-May-04		21-May-04		26-May-04	
	DateExtracted	05/25/2004		05/20/2004		05/25/2004		05/20/2004		05/25/2004	
	SDGNumber	112925		112925		112925		112925		112925	
Arsenic	mg/kg	6.22	=			0.923	J			2.83	=
Barium	mg/kg	15.7	J			3.82	U			15	J
Cadmium	mg/kg	0.284	J			0.09	U			0.19	J
Chromium, Total	mg/kg	7.72	=			4.59	=			5.82	=
Lead	mg/kg	17.4	=			2.42	=			21.6	=
Mercury	mg/kg			0.005	J			0.044	J		
Selenium	mg/kg	0.521	J			0.398	U			0.431	J
Silver	mg/kg	0.169	U			0.172	U			0.171	U

StationID		H198SB003		H198SB003		H198SB004		H198SB004		H198SB004	
SampleID		198SB00302 (3-5ft)		198SB00302 (3-5ft)		198CB00402 (3-5ft)		198CB00402 (3-5ft)		198SB00401 (0-1ft)	
DateCollected		05/13/2004 15:50		05/13/2004 15:50		05/13/2004 16:05		05/13/2004 16:05		05/13/2004 16:00	
DateAnalyzed		21-May-04		26-May-04		21-May-04		26-May-04		21-May-04	
DateExtracted		05/20/2004		05/25/2004		05/20/2004		05/25/2004		05/20/2004	
SDGNumber		112925		112925		112925		112925		112925	
Arsenic	mg/kg			10	=			1.37	J		
Barium	mg/kg			3.94	U			6.78	U		
Cadmium	mg/kg			0.328	J			0.094	U		
Chromium, Total	mg/kg			3.88	=			6.48	=		
Lead	mg/kg			2.97	=			3.89	=		
Mercury	mg/kg	0.033	J			0.011	J			0.037	J
Selenium	mg/kg			0.418	U			0.417	U		
Silver	mg/kg			0.181	U			0.18	U		

Analytical Data Summary

	StationID	H198SB004		H198SB004		H198SB004	
	SampleID	198SB00401 (0-1ft)		198SB00402 (3-5ft)		198SB00402 (3-5ft)	
	DateCollected	05/13/2004 16:00		05/13/2004 16:05		05/13/2004 16:05	
	DateAnalyzed	26-May-04		21-May-04		26-May-04	
	DateExtracted	05/25/2004		05/20/2004		05/25/2004	
	SDGNumber	112925		112925		112925	
Arsenic	mg/kg	7.14	=			0.842	J
Barium	mg/kg	18	J			6.57	U
Cadmium	mg/kg	0.887	J			0.091	U
Chromium, Total	mg/kg	8.18	=			5.92	=
Lead	mg/kg	36.7	=			3.56	=
Mercury	mg/kg			0.009	J		
Selenium	mg/kg	0.389	U			0.405	U
Silver	mg/kg	0.168	U			0.175	U

Appendix C

Data Validation Summary - Charleston Naval Complex - Zone K, SWMU 197 & 198

TO: Casey Hudson/CH2M HILL/ORL

FROM: Amy Juchem/CH2M HILL/GNV
Herb Kelly/CH2M HILL/GNV

DATE: June 18, 2004

The purpose of this memorandum is to present the results of the data validation process for the samples collected in Zone K, SWMU 197 & 198. The samples were collected between the dates of March 16 and May 13, 2004.

The specific samples and analytical fractions reviewed are summarized below in Table 1.

The Quality Control areas that were reviewed and the resulting findings are documented within each subsection that follows. This data was validated for compliance with the analytical method requirements. This process also included a review of the data to assess the accuracy, precision, and completeness based upon procedures described in the guidance documents such as the Environmental Protection Agency (EPA) *National Functional Guidelines for Inorganic Data Review (EPA 2002) and National Functional Guidelines for Organic Data Review (EPA 1999)*. Quality assurance/quality control (QA/QC) summary forms and data reports were reviewed.

Samples were submitted to General Engineering Laboratories, Inc., in Charleston, South Carolina, for the following analyses: SW-846 8260 Volatile Organic Compounds (VOC), SW-846 8270 Semivolatile Organic Compounds (SVOC), SW-846 8082 Polychlorinated Biphenyls, and Metals following SW-846 6010/7000 Series methodology.

Sample results that were not within the acceptance limits were appended with a qualifying flag, which consisted of a single- or double-letter code that indicated a possible problem with the data. The qualifying flags originated during the data review and validation processes. These also include the secondary, or the two to three-digit "sub-qualifier" flags. The secondary qualifiers provide the reasoning behind the assignment of a qualifier flag to the data. The secondary qualifiers are presented and defined below.

Attachment 1 lists the changes in data qualifiers, due to the validation process.

The following primary flags were used to qualify the data:

[=] Detected. The analyte was analyzed for and detected at the concentration shown.

[J] Estimated. The analyte was present but the reported value may not be accurate or precise.

[U] Undetected. The analyte was analyzed for but not detected above the method detection limit.

[UJ] Detection limit estimated. The analyte was analyzed for but qualified as not detected; the result is estimated.

[R] Rejected. The data is not useable.

Secondary Data Validation Qualifiers

Code	Definition
2C	Second Column (Confirmation)
2SH	Second Source Accuracy High
2SL	Second Source Accuracy Low
BD	Blank Spike/Blank Spike Duplicate (LCS/LCSD) Precision
BL	Blank
BSH	Blank Spike/LCS Recovery High
BSL	Blank Spike/LCS Recovery Low
CCH	Continuing Calibration Verification Accuracy High
CCL	Continuing Calibration Verification Accuracy Low
DL	Dilution
FD	Field Duplicate
HT	Holding Time
IB	In Between (Metals - B's □ J's)
ICH	Initial Calibration High
ICL	Initial Calibration Low
ISH	Internal Standard Area Response High
ISL	Internal Standard Area Response Low
LD	Lab Duplicate
LR	Linear Range (Exceeded calibration range)
MD	Matrix Spike/Matrix Spike Duplicate Precision
MSH	Matrix Spike and/or Matrix Spike Duplicate Recovery High
MSL	Matrix Spike and/or Matrix Spike Duplicate Recovery Low
OT	Other
PD	Pesticide Degradation
PSH	Post Spike Recovery High
PSL	Post Spike Recovery Low
RE	Re-extraction
SD	Serial Dilution
SSH	Spiked Surrogate Recovery High
SSL	Spiked Surrogate Recovery Low
TD	Dissolved metal concentration exceeds total metal concentration.
TN	Tune

Table 1 - Chemical Analytical Methods – Field and Quality Control Samples

TABLE 1
Chemical Analytical Methods – Field and Quality Control Samples
Charleston Naval Complex, Zone K, SWMU 197 & 198, Charleston, SC

SDG	Sample ID	Lab Sample ID	Matrix	Sample Type	Upper Depth	Lower Depth	Date Collected	VOC SW8260B	SVOC SW8270C	PCBs SW8082	Metals SW6010B	Mercury SW7470A / SW7471A
109376	197GP00108	109376001	WG	N			03/18/04	X	X		X	X
109376	197GP00115	109376002	WG	N			03/18/04	X	X		X	X
109376	197GP00208	109376003	WG	N			03/18/04	X	X		X	X
109376	197GP00215	109376004	WG	N			03/18/04	X	X		X	X
109376	198GP00108	109376005	WG	N			03/18/04	X	X		X	X
109376	198HP00108	109376006	WG	FD			03/18/04	X	X		X	X
109376	198GP00208	109376007	WG	N			03/18/04	X	X		X	X
109376	198GP00215	109376008	WG	N			03/18/04	X	X		X	X
109376	197EP001P1	109376009	WQ	EB			03/18/04	X	X		X	X
109376	197TP001P1	109376010	WQ	TB			03/16/04	X				
109376	198GP00115	109376013	WG	N			03/18/04	X	X		X	X
109376	1200591438	1200591438	WQ	LB					X			
109376	1200591439	1200591439	WQ	BS					X			
109376	198GP00108MS	1200591440	WG	MS			03/18/04		X			
109376	198GP00108SD	1200591441	WG	SD			03/18/04		X			
109376	1200591682	1200591682	WQ	LB								X

TABLE 1
Chemical Analytical Methods – Field and Quality Control Samples
Charleston Naval Complex, Zone K, SWMU 197 & 198, Charleston, SC

SDG	Sample ID	Lab Sample ID	Matrix	Sample Type	Upper Depth	Lower Depth	Date Collected	VOC SW8260B	SVOC SW8270C	PCBs SW8082	Metals SW6010B	Mercury SW7470A / SW7471A
109376	198GP00108MS	1200591686	WG	MS			03/18/04					X
109376	198GP00108SD	1200591688	WG	SD			03/18/04					X
109376	1200591689	1200591689	WQ	BS								X
109376	1200593922	1200593922	WQ	LB							X	
109376	1200593923	1200593923	WQ	BS							X	
109376	198GP00108LR	1200593924	WG	LR			03/18/04				X	
109376	198GP00108MS	1200593925	WG	MS			03/18/04				X	
109376	198GP00108SD	1200593927	WG	SD			03/18/04				X	
109376	1200594596	1200594596	WQ	LB				X				
109376	1200594597	1200594597	WQ	BS				X				
109376	198GP00108MS	1200594598	WG	MS			03/18/04	X				
109376	198GP00108SD	1200594599	WG	SD			03/18/04	X				
109376	1200594600	1200594600	WQ	LB				X				
109376	1200594601	1200594601	WQ	BS				X				
109376	1200596716	1200596716	WQ	LB				X				
109376	1200596717	1200596717	WQ	BS				X				
112925	197SB00502	112925001	SO	N	3	5	05/13/04	X	X		X	X
112925	197SB00101	112925002	SO	N	0	1	05/13/04	X	X		X	X

TABLE 1
Chemical Analytical Methods – Field and Quality Control Samples
Charleston Naval Complex, Zone K, SWMU 197 & 198, Charleston, SC

SDG	Sample ID	Lab Sample ID	Matrix	Sample Type	Upper Depth	Lower Depth	Date Collected	VOC SW8260B	SVOC SW8270C	PCBs SW8082	Metals SW6010B	Mercury SW7470A / SW7471A
112925	197SB00102	112925003	SO	N	3	5	05/13/04	X	X		X	X
112925	197SB00201	112925004	SO	N	0	1	05/13/04	X	X		X	X
112925	197SB00202	112925005	SO	N	3	5	05/13/04	X	X		X	X
112925	197SB00301	112925006	SO	N	0	1	05/13/04	X	X		X	X
112925	197SB00302	112925007	SO	N	3	5	05/13/04	X	X		X	X
112925	197SB00401	112925008	SO	N	0	1	05/13/04	X	X		X	X
112925	197SB00402	112925009	SO	N	3	5	05/13/04	X	X		X	X
112925	197SB00501	112925010	SO	N	0	1	05/13/04	X	X		X	X
112925	198SB00101	112925011	SO	N			05/13/04	X	X	X	X	X
112925	198SB00102	112925012	SO	N			05/13/04	X	X	X	X	X
112925	198SB00201	112925013	SO	N			05/13/04	X	X	X	X	X
112925	198SB00202	112925014	SO	N			05/13/04	X	X	X	X	X
112925	198SB00301	112925015	SO	N			05/13/04	X	X	X	X	X
112925	198SB00302	112925016	SO	N			05/13/04	X	X	X	X	X
112925	198SB00401	112925017	SO	N			05/13/04	X	X	X	X	X
112925	198SB00402	112925018	SO	N			05/13/04	X	X	X	X	X
112925	198CB00402	112925019	SO	FD			05/13/04	X	X	X	X	X
112925	1200625666	1200625666	SQ	LB			05/20/04					X

TABLE 1
Chemical Analytical Methods – Field and Quality Control Samples
Charleston Naval Complex, Zone K, SWMU 197 & 198, Charleston, SC

SDG	Sample ID	Lab Sample ID	Matrix	Sample Type	Upper Depth	Lower Depth	Date Collected	VOC SW8260B	SVOC SW8270C	PCBs SW8082	Metals SW6010B	Mercury SW7470A / SW7471A
112925	1200625667	1200625667	SQ	BS			05/20/04					X
112925	197SB00502MS	1200625668	SO	MS	3	5	05/13/04					X
112925	197SB00502SD	1200625669	SO	SD	3	5	05/13/04					X
112925	1200625934	1200625934	SQ	LB			05/25/04				X	
112925	1200625935	1200625935	SQ	BS			05/25/04				X	
112925	197SB00502MS	1200625936	SO	MS	3	5	05/13/04				X	
112925	197SB00502SD	1200625937	SO	SD	3	5	05/13/04				X	
112925	1200626426	1200626426	SQ	LB			05/17/04			X		
112925	1200626427	1200626427	SQ	BS			05/17/04			X		
112925	1200626441	1200626441	SQ	LB			05/26/04		X			
112925	1200626442	1200626442	SQ	BS			05/26/04		X			
112925	197SB00502MS	1200626443	SO	MS	3	5	05/13/04		X			
112925	197SB00502SD	1200626444	SO	SD	3	5	05/13/04		X			
112925	1200631282	1200631282	SQ	LB			05/24/04	X				
112925	1200631283	1200631283	SQ	BS			05/24/04	X				
112925	197SB00502MS	1200631284	SO	MS	3	5	05/13/04	X				
112925	197SB00502SD	1200631285	SO	SD	3	5	05/13/04	X				
112925	1200631765	1200631765	SQ	LB			05/24/04	X				

TABLE 1
Chemical Analytical Methods – Field and Quality Control Samples
Charleston Naval Complex, Zone K, SWMU 197 & 198, Charleston, SC

SDG	Sample ID	Lab Sample ID	Matrix	Sample Type	Upper Depth	Lower Depth	Date Collected	VOC SW8260B	SVOC SW8270C	PCBs SW8082	Metals SW6010B	Mercury SW7470A / SW7471A
112925	1200631766	1200631766	SQ	BS			05/24/04	X				
112927	197EB001P2	112927001	WQ	EB			05/13/04	X	X		X	X
112927	197TB001P2	112927002	WQ	TB			05/13/04	X				
112927	1200625507	1200625507	WQ	LB			05/17/04		X			
112927	1200625508	1200625508	WQ	BS			05/17/04		X			
112927	1200626754	1200626754	WQ	LB			05/21/04					X
112927	1200626759	1200626759	WQ	BS			05/21/04					X
112927	1200626760	1200626760	WQ	BD			05/21/04					X
112927	1200628589	1200628589	WQ	LB			05/19/04	X				
112927	1200628592	1200628592	WQ	BS			05/19/04	X				
112927	1200633301	1200633301	WQ	LB			05/27/04				X	
112927	1200633303	1200633303	WQ	BS			05/27/04				X	
112927	1200633304	1200633304	WQ	BD			05/27/04				X	

TABLE 1
Chemical Analytical Methods – Field and Quality Control Samples
Charleston Naval Complex, Zone K, SWMU 197 & 198, Charleston, SC

SDG	Sample ID	Lab Sample ID	Matrix	Sample Type	Upper Depth	Lower Depth	Date Collected	VOC SW8260B	SVOC SW8270C	PCBs SW8082	Metals SW6010B	Mercury SW7470A / SW7471A

MATRIX CODE

WS – Water Sample
WQ – Water QC Sample
SO – Soil Sample
SQ – Soil QC Sample

SAMPLE TYPE CODE

BS - Blank Spike
BD – Blank Spike Duplicate
EB - Equipment Blank
TB – Trip Blank
N - Native Sample
FD – Field Duplicate
LB - Laboratory Blank
LR – Laboratory Replicate
MS – Matrix Spike
SD – Matrix Spike Duplicate

LR TYPE

DL - Dilution

ANALYSIS CODE

VOC – Volatile Organic Compounds
SVOC - Semivolatile Organic Compounds
PCB – Polychlorinated Biphenyls

Organic Parameters

Quality Control Review

The following list represents the QA/QC measures that were reviewed during the data quality evaluation procedure for organic data.

- **Holding Times** – The holding times are evaluated to verify that samples were extracted and analyzed within holding times.
- **Blank samples** – Method blanks, equipment blanks, and trip blanks were provided for this project. Blank samples enable the reviewer to determine if an analyte may be attributed to sampling or laboratory procedures, rather than environmental contamination from site activities.
- **Surrogate Recoveries** – Surrogate Compounds are added to each sample and the recoveries are used to monitor lab performance and possible matrix interference.
- **Lab Control Sample (LCS)** – This sample is a "controlled matrix", either laboratory reagent water or Ottawa sand, in which target compounds have been added prior to extraction/analysis. The recoveries serve as a monitor of the overall performance of each step during the analysis, including sample preparation.
- **Matrix Spike/Matrix Spike Duplicate (MS/MSD) Samples** – Spike recovery is used to evaluate potential matrix interferences, as well as accuracy. Precision information is also determined by calculating the reproducibility between the recoveries of each spiked parameter.
- **Field Duplicate Samples** – These samples are collected to determine precision between a native and its duplicate. This information can only be determined when target compounds are detected.
- **GC/MS Tuning** – The mass spectrum of the tuning compound is evaluated for method compliance. The criteria are established to verify the proper mass assignment and mass resolution.
- **Initial Calibration** – The initial calibration ensures that the instrument is capable of producing acceptable qualitative and quantitative data for the compounds of interest.
- **Continuing Calibration** – The continuing calibration checks satisfactory performance of the instrument and its predicted response to the target compounds.
- **Internal Standards** – The internal standards (retention time and response) are evaluated for method compliance. The internal standards are used in quantitation of the target parameters and monitor the instrument sensitivity and response for stability during each analysis.

Volatile Organic Compounds (VOC) Analyses

The QA/QC parameters for VOC analyses for all of the samples were within acceptable control limits, except as noted below:

Blanks

The VOC target parameters detected in blank samples are listed in Table 2.

TABLE 2
Blank Contamination: VOC
Charleston Naval Complex, Zone K, SWMU 197 & 198, Charleston, SC

SDG	Sample ID	Lab Sample ID	Sample Type	Parameter	Lab Result	Units	Flag Concentrations less than the value listed below
109376	197EP001P1	109376009	EB	Acetone	3.9	µg/L	39.0 µg/L
109376	197TP001P1	109376001	TB	Acetone	2.7	µg/L	27.0 µg/L
109376	197TP001P1	109376001	TB	Toluene	0.41	µg/L	2.05 µg/L
112925	1200631282	1200631282	LB	Toluene	0.47	µg/Kg	2.35 µg/Kg
112925	1200631765	1200631765	LB	Toluene	0.53	µg/Kg	2.65 µg/Kg

If a target parameter determined to be a common contaminant was reported in a field sample, and the concentration was below the level determined to be due to blank contamination, the following actions were taken:

- If the concentration was above the reporting limit, the numeric result was unchanged, but it was flagged "U", as undetected.
- If the concentration was below the reporting limit, the numeric result was changed to the value of the reporting limit, and it was flagged "U", as undetected.

The results qualified due to blank contamination are listed in Attachment 1.

Recoveries - Surrogate, MS/MSD and LCS

All Surrogate, Matrix Spike (MS), Matrix Spike Duplicate (MSD), and Laboratory Control Sample (LCS) recoveries were within acceptable quality control limits, except as noted in Table 3 below.

TABLE 3
MS/MSD Recoveries Out of QC Limits: VOC
Charleston Naval Complex, Zone K, SWMU 197 & 198, Charleston, SC

SDG	Sample	Parameter	Recovery	Recovery Limits	Associated Samples	Flag
109376	198GP00108 MS/MSD	2-Chloroethyl vinyl ether	1.0* / 37.2*	70-130	198GP00108	Detects – J; non-detects – UJ
112925	197SB00502 MS/MSD	Acetone	66.4* / 66.4*	70-130	197SB00502	Detects – J; non-detects – UJ
		Vinyl acetate	5.0* / 2.8*	70-130		
		1,2,4-Trichlorobenzene	69.4* / 59.4*	70-130		
		1,2,3-Trichlorobenzene	68.0* / 59.8*	70-130		
* - out of control limits						

Initial and Continuing Calibration Criteria

All initial calibration criteria and continuing calibration criteria were met, except as listed in Table 4.

TABLE 4
Exceptions to Continuing Calibration Criteria: VOC
Charleston Naval Complex, Zone K, SWMU 197 & 198, Charleston, SC

Instrument/Calibration Date	Analyte	%Relative Standard Deviation or R^2 (ICAL)/ %Difference (CCAL)	Associated Samples
VOA9-CCAL-03/25/04, 1120	Acetone	20.7% low	109376006 thru 109376010, 109376013
	2-Butanone	21.7% low	
VOA8-CCAL-05/24/04, 1614	Acetone	22.1% low	112925001 thru 112925008
VOA8-CCAL-05/25/04, 0756	Chloromethane	25.2% low	112925009 thru 112925019
	Acetone	23.8% low	
	Vinyl acetate	22.1% low	
	2-Butanone	23.2% low	
	2-Chloroethyl vinyl ether	24.8% low	
	2-Hexanone	21.3% low	
	2-Chloroethyl viny ether	0.048 RF	

TABLE 4
Exceptions to Continuing Calibration Criteria: VOC
Charleston Naval Complex, Zone K, SWMU 197 & 198, Charleston, SC

Instrument/Calibration Date	Analyte	%Relative Standard Deviation or R^2 (ICAL)/ %Difference (CCAL)	Associated Samples
VOA5-CCAL-05/19/04, 0707	Chloroethane	26.65 low	112927001 (EB), 112927002 (TB)
	Carbon disulfide	21.0% low	
	Bromodichloromethane	24.5% high	

Flags were applied to the compounds in the associated samples in the following manner:

- When the percent difference (%D) was high in the continuing calibration standards, detected compounds were flagged "J", as estimated. Non-detected compounds were not flagged.
- When the percent difference (%D) or response factor (RF) was low in the continuing calibration standards, detected compounds were flagged "J" and non-detected compounds were flagged "UJ", as estimated.

Semivolatile Organic Compounds (SVOC) Analyses

The QA/QC parameters for the SVOC analyses for all of the samples were within acceptable control limits, except as noted below.

Blanks

The SVOC target parameters detected in blank samples are listed in Table 5.

TABLE 5
Blank Contamination: SVOC
Charleston Naval Complex, Zone K, SWMU 197 & 198, Charleston, SC

SDG	Sample ID	Lab Sample ID	Sample Type	Parameter	Lab Result	Units	Flag Concentrations less than the value listed below
109376	1200591438	1200591438	LB	Bis(2-ethylhexyl)phthalate	3.0	µg/L	30.0 µg/L
109376	197EP001P1	109376009	EB	Bis(2-ethylhexyl)phthalate	2.7	µg/L	27.0 µg/L
112927	197EP001P2	112927001	EB	Bis(2-ethylhexyl)phthalate	1.7	µg/L	561.0 µg/Kg

If a target parameter determined to be a common contaminant was reported in a field sample, and the concentration was below the level determined to be due to blank contamination, the following actions were taken:

- If the concentration was above the reporting limit, the numeric result was unchanged, but it was flagged "U", as undetected.
- If the concentration was below the reporting limit, the numeric result was changed to the value of the reporting limit, and it was flagged "U", as undetected.

The results qualified due to blank contamination are listed in Attachment 1.

Recoveries - Surrogate, MS/MSD and LCS

All Surrogate, Matrix Spike (MS), Matrix Spike Duplicate (MSD), and Laboratory Control Sample (LCS) recoveries were within acceptable quality control limits, except as noted in Table 6 below.

TABLE 6
MS/MSD Recoveries Out of QC Limits: SVOC
Charleston Naval Complex, Zone K, SWMU 197 & 198, Charleston, SC

SDG	Sample	Parameter	Recovery	Recovery Limits	Associated Samples	Flag
112925	1200626442 LCS	m-Nitroaniline	0*		112925 – All	Detects – J; non-detects – R
* - out of control limits						

Initial and Continuing Calibration Criteria

All initial calibration criteria and continuing calibration criteria were met, except as listed in Table 7.

TABLE 7
Exceptions to Initial Calibration Criteria and Continuing Calibration Criteria: SVOC
Charleston Naval Complex, Zone K, SWMU 197 & 198, Charleston, SC

Instrument/Calibration Date	Analyte	%Relative Standard Deviation or R^2 (ICAL)/ %Difference (CCAL)	Associated Samples
MSD5-ICAL-03/04/04, 2256	Hexachlorocyclopentadiene	R^2=0.986	109376 – All
	2-Methyl-4,6-dinitrophenol	R^2=0.989	
MSD5-CCAL-03/24/04, 0946	Benzoic acid	22.3% low	109376 – All
	4-Chloroaniline	20.6% low	
	o-Nitroaniline	27.0% low	
	p-Nitroaniline	25.3% low	

TABLE 7
Exceptions to Initial Calibration Criteria and Continuing Calibration Criteria: SVOC
Charleston Naval Complex, Zone K, SWMU 197 & 198, Charleston, SC

Instrument/Calibration Date	Analyte	%Relative Standard Deviation or R^2 (ICAL)/ %Difference (CCAL)	Associated Samples
MSD4-CCAL-05/27/04, 0740	Bis(2-Chloroethyl)ether	26.4% high	112925 – All
MSD5-CCAL-05/18/04, 0929	2,4-Dinitrophenol	26.6% low	112927001 (EB)
	2-Methyl-4,6-dinitrophenol	27.7% low	

Flags were applied to the compounds in the associated samples in the following manner:

- When the percent Relative Standard Deviation (%RSD) or correlation coefficient (R^2) was out in the initial calibration, all associated samples were qualified. Detected compounds were flagged "J" and non-detected compounds were flagged "UJ", as estimated.
- When the percent difference (%D) was low in the continuing calibration standards, detected compounds were flagged "J" and non-detected compounds were flagged "UJ", as estimated.
- When the percent difference (%D) was high in the continuing calibration standards, detected compounds were flagged "J", as estimated. Non-detected compounds were not flagged.

Polychlorinated Biphenyls (PCBs) Analyses

The QA/QC parameters for the PCB analyses for all of the samples were within acceptable control limits.

Inorganic Parameters

Quality Control Review

The following list represents the QA/QC measures that are typically reviewed during the data quality evaluation procedure for inorganic parameters.

- **Holding Times** – The holding times are evaluated to verify that samples were extracted and analyzed within holding times.
- **Blank samples** – Sample preparation, initial calibration blanks/continuing calibration blanks, and equipment blanks were provided for this project. Blank samples enable the reviewer to determine if an analyte may be attributed to sampling or laboratory procedures, rather than environmental contamination from site activities.
- **Lab Control Sample (LCS)** – This sample is a "controlled matrix", in which target parameters have been added prior to digestion/analysis. The recoveries serve as a monitor of the overall performance of each step during the analysis, including sample preparation.
- **Field Duplicate Samples** – These samples are collected to determine precision between a native and its duplicate. This information can only be determined when target compounds are detected.
- **Pre/Post Digestion Spike (MS/MSD)** – Spike recovery is used to evaluate potential matrix interferences, as well as accuracy. Precision information is also determined by calculating the reproducibility between the recoveries of each spiked parameter.
- **ICP Interference Check Sample** – This sample verifies the lab's interelement and background correction factors.
- **Initial Calibration Verification** – This parameter ensures that the instrument is capable of producing acceptable quantitative data for the target analyte list to be measured.
- **Continuing Calibration Verification** – This one-point, mid-range parameter establishes that the initial calibration is still valid by checking the performance of the instrument on a continual basis.
- **ICP Serial Dilution** – The serial dilution of samples quantitated by ICP determines whether or not significant physical or chemical interferences exist due to the sample matrix.

Metals Analyses

The QA/QC parameters for the Metals analyses for all of the samples were within acceptable control limits, except as noted below.

Blanks

The metals target parameters detected in blank samples are listed in Table 8.

TABLE 8
Blank Contamination: Metals
Charleston Naval Complex, Zone K, SWMU 197 & 198, Charleston, SC

SDG	Sample ID	Lab Sample ID	Sample Type	Parameter	Lab Result	Units	Flag Concentrations less than the value listed below
109376	CCB		CCB	Lead	1.45	µg/L	7.25 µg/L
109376	1200593922	1200593922	LB	Barium	1.07	µg/L	5.35 µg/L
109376	1200593922	1200593922	LB	Chromium	0.485	µg/L	2.43 µg/L
109376	197EP001P1	109376009	EB	Chromium	0.626	µg/L	3.13 µg/L
112925	ICB		ICB	Chromium	1.39	µg/L	0.695 mg/Kg
112925	197EB001P2	1112927001	EB	Barium	25.3	µg/L	12.65 mg/Kg
112925	197EB001P2	1112927001	EB	Chromium	0.663	µg/L	0.332 mg/Kg
112925	197EB001P2	1112927001	EB	Silver	0.718	µg/L	0.359 mg/Kg

If a target parameter was reported in a field sample, and the concentration was below the level determined to be due to blank contamination (5 times the concentration in the associated QC blank samples), it was flagged as "U", not detected. Initial and continuing calibration blanks were also evaluated for possible contamination.

The results qualified due to blank contamination are listed in Attachment 1.

Field Duplicate Samples

All Field Duplicate Samples were within acceptable quality control limits, except as noted in Table 9 below. According to EPA *National Functional Guidelines*, no flags are applied due to Field Duplicate precision.

TABLE 9
Field Duplicate RPDs Out of QC Limits: Metals
Charleston Naval Complex, Zone K, SWMU 197 & 198, Charleston, SC

SDG	Sample	Parameter	Native Concentration	Field Duplicate Concentration	RPD	RPD Limits
109376	198GP00108 / 198HP00108	Chromium	92.5 ug/L	5.550 ug/L	177*	20
		Lead	22.6 ug/L	1.900 ug/L	169*	20
* - out of control limits						

ICP Serial Dilution

All Serial Dilution recoveries were within acceptable quality control limits, except as noted in Table 10 below.

TABLE 10
Serial Dilution Recoveries Out of QC Limits: Metals
Charleston Naval Complex, Zone K, SWMU 197 & 198, Charleston, SC

SDG	Parameter	Recovery	Recovery Limits	Associated Samples	Flag
109376	Barium	17.4*	10	109376 – All	Detects-J, non-detects-UJ
* - out of control limits					

Rejected Data

As discussed in the sections above, there were selected results qualified as "R", rejected, due to associated QC parameters out of criteria, such that there is not a valid result for that parameter in each sample. The rejected data are summarized in Table 11 below.

TABLE 11
Data Qualification Summary: Rejected Data
Charleston Naval Complex, Zone K, SWMU 197 & 198, Charleston, SC

SDG	Sample ID	Parameter Class	Parameter	Lab Result	Lab Qual	Final Result	Final Qual	Units	Reason
112925	197SB00101	SVOA	3-NITROANILINE	1740	U	1740	R	ug/kg	BSL
112925	197SB00102	SVOA	3-NITROANILINE	1760	U	1760	R	ug/kg	BSL
112925	197SB00201	SVOA	3-NITROANILINE	1750	U	1750	R	ug/kg	BSL
112925	197SB00202	SVOA	3-NITROANILINE	1790	U	1790	R	ug/kg	BSL
112925	197SB00301	SVOA	3-NITROANILINE	1660	U	1660	R	ug/kg	BSL
112925	197SB00302	SVOA	3-NITROANILINE	1750	U	1750	R	ug/kg	BSL
112925	197SB00401	SVOA	3-NITROANILINE	1720	U	1720	R	ug/kg	BSL
112925	197SB00402	SVOA	3-NITROANILINE	1860	U	1860	R	ug/kg	BSL
112925	197SB00501	SVOA	3-NITROANILINE	1790	U	1790	R	ug/kg	BSL
112925	197SB00502	SVOA	3-NITROANILINE	1950	U	1950	R	ug/kg	BSL
112925	198CB00402	SVOA	3-NITROANILINE	1790	U	1790	R	ug/kg	BSL
112925	198SB00101	SVOA	3-NITROANILINE	1730	U	1730	R	ug/kg	BSL
112925	198SB00102	SVOA	3-NITROANILINE	1790	U	1790	R	ug/kg	BSL
112925	198SB00201	SVOA	3-NITROANILINE	1680	U	1680	R	ug/kg	BSL
112925	198SB00202	SVOA	3-NITROANILINE	1750	U	1750	R	ug/kg	BSL
112925	198SB00301	SVOA	3-NITROANILINE	1720	U	1720	R	ug/kg	BSL
112925	198SB00302	SVOA	3-NITROANILINE	1800	U	1800	R	ug/kg	BSL
112925	198SB00401	SVOA	3-NITROANILINE	1690	U	1690	R	ug/kg	BSL
112925	198SB00402	SVOA	3-NITROANILINE	1750	U	1750	R	ug/kg	BSL

Conclusion

A review of the analytical data submitted regarding the investigation of Zone K, SWMU 197 & 198 at the Charleston Naval Complex, Charleston, South Carolina by CH2M HILL has been completed. An overall evaluation of the data indicates that the sample handling, shipment, and analytical procedures have been adequately completed, and that the analytical results should be considered usable as qualified.

As discussed above, there were specific results that were rejected, in which the data cannot be used. With the exception of these results, the validation review demonstrated that the analytical systems were generally in control and the data can be used in the decision making process.

Parameter Class	Analytical Method	Parameter	SDG	Lab Sample ID	Sample ID	Matrix	Lab Result	Lab Qual	Final Result	Final Qual	Units	Reason
METAL	SW6010B	ARSENIC	109376	197GP00115	109376002	WG	6.98	B	6.98	J	ug/L	IB
METAL	SW6010B	ARSENIC	109376	198GP00208	109376007	WG	36.3	B	36.3	J	ug/L	IB
METAL	SW6010B	ARSENIC	109376	198GP00115	109376013	WG	3.7	B	3.7	J	ug/L	IB
METAL	SW6010B	ARSENIC	112925	197SB00502	112925001	SO	1.78	B	1.78	J	mg/kg	IB
METAL	SW6010B	ARSENIC	112925	197SB00102	112925003	SO	2.14	B	2.14	J	mg/kg	IB
METAL	SW6010B	ARSENIC	112925	197SB00202	112925005	SO	1.3	B	1.3	J	mg/kg	IB
METAL	SW6010B	ARSENIC	112925	197SB00302	112925007	SO	1.64	B	1.64	J	mg/kg	IB
METAL	SW6010B	ARSENIC	112925	197SB00402	112925009	SO	1.41	B	1.41	J	mg/kg	IB
METAL	SW6010B	ARSENIC	112925	198SB00102	112925012	SO	1.72	B	1.72	J	mg/kg	IB
METAL	SW6010B	ARSENIC	112925	198SB00202	112925014	SO	0.923	B	0.923	J	mg/kg	IB
METAL	SW6010B	ARSENIC	112925	198SB00402	112925018	SO	0.842	B	0.842	J	mg/kg	IB
METAL	SW6010B	ARSENIC	112925	198CB00402	112925019	SO	1.37	B	1.37	J	mg/kg	IB
METAL	SW6010B	BARIUM	109376	197GP00108	109376001	WG	15.9	BE	15.9	J	ug/L	SD
METAL	SW6010B	BARIUM	109376	197GP00115	109376002	WG	508	E	508	J	ug/L	SD
METAL	SW6010B	BARIUM	109376	197GP00208	109376003	WG	1410	E	1410	J	ug/L	SD
METAL	SW6010B	BARIUM	109376	197GP00215	109376004	WG	3.77	BE	3.77	UJ	ug/L	BL,SD
METAL	SW6010B	BARIUM	109376	198GP00108	109376005	WG	98.8	BE	98.8	J	ug/L	SD
METAL	SW6010B	BARIUM	109376	198HP00108	109376006	WG	18.5	BE	18.5	J	ug/L	SD
METAL	SW6010B	BARIUM	109376	198GP00208	109376007	WG	1870	E	1870	J	ug/L	SD
METAL	SW6010B	BARIUM	109376	198GP00215	109376008	WG	1760	E	1760	J	ug/L	SD
METAL	SW6010B	BARIUM	109376	198GP00115	109376013	WG	778	E	778	J	ug/L	SD
METAL	SW6010B	BARIUM	112925	197SB00502	112925001	SO	20.3	B	20.3	J	mg/kg	IB
METAL	SW6010B	BARIUM	112925	197SB00101	112925002	SO	25.8	B	25.8	J	mg/kg	IB
METAL	SW6010B	BARIUM	112925	197SB00102	112925003	SO	6.58	B	6.58	U	mg/kg	BL
METAL	SW6010B	BARIUM	112925	197SB00201	112925004	SO	14.1	B	14.1	J	mg/kg	IB
METAL	SW6010B	BARIUM	112925	197SB00202	112925005	SO	7.51	B	7.51	U	mg/kg	BL
METAL	SW6010B	BARIUM	112925	197SB00301	112925006	SO	18.4	B	18.4	J	mg/kg	IB
METAL	SW6010B	BARIUM	112925	197SB00302	112925007	SO	6.62	B	6.62	U	mg/kg	BL
METAL	SW6010B	BARIUM	112925	197SB00401	112925008	SO	27.6	B	27.6	J	mg/kg	IB
METAL	SW6010B	BARIUM	112925	197SB00402	112925009	SO	12.7	B	12.7	J	mg/kg	IB
METAL	SW6010B	BARIUM	112925	197SB00501	112925010	SO	16.1	B	16.1	J	mg/kg	IB
METAL	SW6010B	BARIUM	112925	198SB00101	112925011	SO	12.1	B	12.1	U	mg/kg	BL
METAL	SW6010B	BARIUM	112925	198SB00102	112925012	SO	10.3	B	10.3	U	mg/kg	BL

Parameter Class	Analytical Method	Parameter	SDG	Lab Sample ID	Sample ID	Matrix	Lab Result	Lab Qual	Final Result	Final Qual	Units	Reason
METAL	SW6010B	BARIUM	112925	198SB00201	112925013	SO	15.7	B	15.7	J	mg/kg	IB
METAL	SW6010B	BARIUM	112925	198SB00202	112925014	SO	3.82	B	3.82	U	mg/kg	BL
METAL	SW6010B	BARIUM	112925	198SB00301	112925015	SO	15	B	15	J	mg/kg	IB
METAL	SW6010B	BARIUM	112925	198SB00302	112925016	SO	3.94	B	3.94	U	mg/kg	BL
METAL	SW6010B	BARIUM	112925	198SB00401	112925017	SO	18	B	18	J	mg/kg	IB
METAL	SW6010B	BARIUM	112925	198SB00402	112925018	SO	6.57	B	6.57	U	mg/kg	BL
METAL	SW6010B	BARIUM	112925	198CB00402	112925019	SO	6.78	B	6.78	U	mg/kg	BL
METAL	SW6010B	CADMIUM	112925	197SB00101	112925002	SO	0.224	B	0.224	J	mg/kg	IB
METAL	SW6010B	CADMIUM	112925	197SB00302	112925007	SO	0.484	B	0.484	J	mg/kg	IB
METAL	SW6010B	CADMIUM	112925	197SB00401	112925008	SO	0.899	B	0.899	J	mg/kg	IB
METAL	SW6010B	CADMIUM	112925	197SB00501	112925010	SO	0.344	B	0.344	J	mg/kg	IB
METAL	SW6010B	CADMIUM	112925	198SB00101	112925011	SO	0.656	B	0.656	J	mg/kg	IB
METAL	SW6010B	CADMIUM	112925	198SB00201	112925013	SO	0.284	B	0.284	J	mg/kg	IB
METAL	SW6010B	CADMIUM	112925	198SB00301	112925015	SO	0.19	B	0.19	J	mg/kg	IB
METAL	SW6010B	CADMIUM	112925	198SB00302	112925016	SO	0.328	B	0.328	J	mg/kg	IB
METAL	SW6010B	CADMIUM	112925	198SB00401	112925017	SO	0.887	B	0.887	J	mg/kg	IB
METAL	SW6010B	CHROMIUM, TOTAL	109376	197GP00108	109376001	WG	6.24	B	6.24	J	ug/L	IB
METAL	SW6010B	CHROMIUM, TOTAL	109376	197GP00215	109376004	WG	1.03	B	1.03	U	ug/L	BL
METAL	SW6010B	CHROMIUM, TOTAL	109376	198HP00108	109376006	WG	5.55	B	5.55	J	ug/L	IB
METAL	SW6010B	LEAD	109376	197GP00108	109376001	WG	1.96	B	1.96	U	ug/L	BL
METAL	SW6010B	LEAD	109376	198HP00108	109376006	WG	1.9	B	1.9	U	ug/L	BL
METAL	SW7470A	MERCURY	109376	198GP00115	109376013	WG	0.114	B	0.114	J	ug/L	IB
METAL	SW7471A	MERCURY	112925	197SB00502	112925001	SO	0.034	B	0.034	J	mg/kg	IB
METAL	SW7471A	MERCURY	112925	197SB00101	112925002	SO	0.038	B	0.038	J	mg/kg	IB
METAL	SW7471A	MERCURY	112925	197SB00102	112925003	SO	0.027	B	0.027	J	mg/kg	IB
METAL	SW7471A	MERCURY	112925	197SB00201	112925004	SO	0.06	B	0.06	J	mg/kg	IB
METAL	SW7471A	MERCURY	112925	197SB00202	112925005	SO	0.016	B	0.016	J	mg/kg	IB
METAL	SW7471A	MERCURY	112925	197SB00301	112925006	SO	0.005	B	0.005	J	mg/kg	IB
METAL	SW7471A	MERCURY	112925	197SB00302	112925007	SO	0.023	B	0.023	J	mg/kg	IB
METAL	SW7471A	MERCURY	112925	197SB00401	112925008	SO	0.051	B	0.051	J	mg/kg	IB
METAL	SW7471A	MERCURY	112925	197SB00402	112925009	SO	0.027	B	0.027	J	mg/kg	IB
METAL	SW7471A	MERCURY	112925	197SB00501	112925010	SO	0.095	B	0.095	J	mg/kg	IB
METAL	SW7471A	MERCURY	112925	198SB00101	112925011	SO	0.045	B	0.045	J	mg/kg	IB

Attachment 1 - Changed Qualifiers and Results
Zone K, SWMU 197 and 198 - Data Validation

Parameter Class	Analytical Method	Parameter	SDG	Lab Sample ID	Sample ID	Matrix	Lab Result	Lab Qual	Final Result	Final Qual	Units	Reason
METAL	SW7471A	MERCURY	112925	198SB00102	112925012	SO	0.009	B	0.009	J	mg/kg	IB
METAL	SW7471A	MERCURY	112925	198SB00201	112925013	SO	0.043	B	0.043	J	mg/kg	IB
METAL	SW7471A	MERCURY	112925	198SB00202	112925014	SO	0.005	B	0.005	J	mg/kg	IB
METAL	SW7471A	MERCURY	112925	198SB00301	112925015	SO	0.044	B	0.044	J	mg/kg	IB
METAL	SW7471A	MERCURY	112925	198SB00302	112925016	SO	0.033	B	0.033	J	mg/kg	IB
METAL	SW7471A	MERCURY	112925	198SB00401	112925017	SO	0.037	B	0.037	J	mg/kg	IB
METAL	SW7471A	MERCURY	112925	198SB00402	112925018	SO	0.009	B	0.009	J	mg/kg	IB
METAL	SW7471A	MERCURY	112925	198CB00402	112925019	SO	0.011	B	0.011	J	mg/kg	IB
METAL	SW6010B	SELENIUM	112925	197SB00301	112925006	SO	0.589	B	0.589	J	mg/kg	IB
METAL	SW6010B	SELENIUM	112925	197SB00302	112925007	SO	0.467	B	0.467	J	mg/kg	IB
METAL	SW6010B	SELENIUM	112925	198SB00201	112925013	SO	0.521	B	0.521	J	mg/kg	IB
METAL	SW6010B	SELENIUM	112925	198SB00301	112925015	SO	0.431	B	0.431	J	mg/kg	IB
SVOA	SW8270C	2-NITROANILINE	109376	197GP00108	109376001	WG	47.2	U	47.2	UJ	ug/L	CCL
SVOA	SW8270C	2-NITROANILINE	109376	197GP00115	109376002	WG	47.2	U	47.2	UJ	ug/L	CCL
SVOA	SW8270C	2-NITROANILINE	109376	197GP00208	109376003	WG	48.1	U	48.1	UJ	ug/L	CCL
SVOA	SW8270C	2-NITROANILINE	109376	197GP00215	109376004	WG	49.5	U	49.5	UJ	ug/L	CCL
SVOA	SW8270C	2-NITROANILINE	109376	198GP00108	109376005	WG	49	U	49	UJ	ug/L	CCL
SVOA	SW8270C	2-NITROANILINE	109376	198HP00108	109376006	WG	48.1	U	48.1	UJ	ug/L	CCL
SVOA	SW8270C	2-NITROANILINE	109376	198GP00208	109376007	WG	51.5	U	51.5	UJ	ug/L	CCL
SVOA	SW8270C	2-NITROANILINE	109376	198GP00215	109376008	WG	49	U	49	UJ	ug/L	CCL
SVOA	SW8270C	2-NITROANILINE	109376	198GP00115	109376013	WG	49.5	U	49.5	UJ	ug/L	CCL
SVOA	SW8270C	3-NITROANILINE	112925	197SB00502	112925001	SO	1950	U	1950	R	ug/kg	BSL
SVOA	SW8270C	3-NITROANILINE	112925	197SB00101	112925002	SO	1740	U	1740	R	ug/kg	BSL
SVOA	SW8270C	3-NITROANILINE	112925	197SB00102	112925003	SO	1760	U	1760	R	ug/kg	BSL
SVOA	SW8270C	3-NITROANILINE	112925	197SB00201	112925004	SO	1750	U	1750	R	ug/kg	BSL
SVOA	SW8270C	3-NITROANILINE	112925	197SB00202	112925005	SO	1790	U	1790	R	ug/kg	BSL
SVOA	SW8270C	3-NITROANILINE	112925	197SB00301	112925006	SO	1660	U	1660	R	ug/kg	BSL
SVOA	SW8270C	3-NITROANILINE	112925	197SB00302	112925007	SO	1750	U	1750	R	ug/kg	BSL
SVOA	SW8270C	3-NITROANILINE	112925	197SB00401	112925008	SO	1720	U	1720	R	ug/kg	BSL
SVOA	SW8270C	3-NITROANILINE	112925	197SB00402	112925009	SO	1860	U	1860	R	ug/kg	BSL
SVOA	SW8270C	3-NITROANILINE	112925	197SB00501	112925010	SO	1790	U	1790	R	ug/kg	BSL
SVOA	SW8270C	3-NITROANILINE	112925	198SB00101	112925011	SO	1730	U	1730	R	ug/kg	BSL
SVOA	SW8270C	3-NITROANILINE	112925	198SB00102	112925012	SO	1790	U	1790	R	ug/kg	BSL

Parameter Class	Analytical Method	Parameter	SDG	Lab Sample ID	Sample ID	Matrix	Lab Result	Lab Qual	Final Result	Final Qual	Units	Reason
SVOA	SW8270C	3-NITROANILINE	112925	198SB00201	112925013	SO	1680	U	1680	R	ug/kg	BSL
SVOA	SW8270C	3-NITROANILINE	112925	198SB00202	112925014	SO	1750	U	1750	R	ug/kg	BSL
SVOA	SW8270C	3-NITROANILINE	112925	198SB00301	112925015	SO	1720	U	1720	R	ug/kg	BSL
SVOA	SW8270C	3-NITROANILINE	112925	198SB00302	112925016	SO	1800	U	1800	R	ug/kg	BSL
SVOA	SW8270C	3-NITROANILINE	112925	198SB00401	112925017	SO	1690	U	1690	R	ug/kg	BSL
SVOA	SW8270C	3-NITROANILINE	112925	198SB00402	112925018	SO	1750	U	1750	R	ug/kg	BSL
SVOA	SW8270C	3-NITROANILINE	112925	198CB00402	112925019	SO	1790	U	1790	R	ug/kg	BSL
SVOA	SW8270C	4,6-DINITRO-2-METHYLPHENOL	109376	197GP00108	109376001	WG	47.2	U	47.2	UJ	ug/L	IC
SVOA	SW8270C	4,6-DINITRO-2-METHYLPHENOL	109376	197GP00115	109376002	WG	47.2	U	47.2	UJ	ug/L	IC
SVOA	SW8270C	4,6-DINITRO-2-METHYLPHENOL	109376	197GP00208	109376003	WG	48.1	U	48.1	UJ	ug/L	IC
SVOA	SW8270C	4,6-DINITRO-2-METHYLPHENOL	109376	197GP00215	109376004	WG	49.5	U	49.5	UJ	ug/L	IC
SVOA	SW8270C	4,6-DINITRO-2-METHYLPHENOL	109376	198GP00108	109376005	WG	49	U	49	UJ	ug/L	IC
SVOA	SW8270C	4,6-DINITRO-2-METHYLPHENOL	109376	198HP00108	109376006	WG	48.1	U	48.1	UJ	ug/L	IC
SVOA	SW8270C	4,6-DINITRO-2-METHYLPHENOL	109376	198GP00208	109376007	WG	51.5	U	51.5	UJ	ug/L	IC
SVOA	SW8270C	4,6-DINITRO-2-METHYLPHENOL	109376	198GP00215	109376008	WG	49	U	49	UJ	ug/L	IC
SVOA	SW8270C	4,6-DINITRO-2-METHYLPHENOL	109376	198GP00115	109376013	WG	49.5	U	49.5	UJ	ug/L	IC
SVOA	SW8270C	4-CHLOROANILINE	109376	197GP00108	109376001	WG	9.4	U	9.4	UJ	ug/L	CCL
SVOA	SW8270C	4-CHLOROANILINE	109376	197GP00115	109376002	WG	9.4	U	9.4	UJ	ug/L	CCL
SVOA	SW8270C	4-CHLOROANILINE	109376	197GP00208	109376003	WG	9.6	U	9.6	UJ	ug/L	CCL
SVOA	SW8270C	4-CHLOROANILINE	109376	197GP00215	109376004	WG	9.9	U	9.9	UJ	ug/L	CCL
SVOA	SW8270C	4-CHLOROANILINE	109376	198GP00108	109376005	WG	9.8	U	9.8	UJ	ug/L	CCL
SVOA	SW8270C	4-CHLOROANILINE	109376	198HP00108	109376006	WG	9.6	U	9.6	UJ	ug/L	CCL
SVOA	SW8270C	4-CHLOROANILINE	109376	198GP00208	109376007	WG	10.3	U	10.3	UJ	ug/L	CCL
SVOA	SW8270C	4-CHLOROANILINE	109376	198GP00215	109376008	WG	9.8	U	9.8	UJ	ug/L	CCL
SVOA	SW8270C	4-CHLOROANILINE	109376	198GP00115	109376013	WG	9.9	U	9.9	UJ	ug/L	CCL
SVOA	SW8270C	4-NITROANILINE	109376	197GP00108	109376001	WG	47.2	U	47.2	UJ	ug/L	CCL
SVOA	SW8270C	4-NITROANILINE	109376	197GP00115	109376002	WG	47.2	U	47.2	UJ	ug/L	CCL
SVOA	SW8270C	4-NITROANILINE	109376	197GP00208	109376003	WG	48.1	U	48.1	UJ	ug/L	CCL
SVOA	SW8270C	4-NITROANILINE	109376	197GP00215	109376004	WG	49.5	U	49.5	UJ	ug/L	CCL
SVOA	SW8270C	4-NITROANILINE	109376	198GP00108	109376005	WG	49	U	49	UJ	ug/L	CCL
SVOA	SW8270C	4-NITROANILINE	109376	198HP00108	109376006	WG	48.1	U	48.1	UJ	ug/L	CCL
SVOA	SW8270C	4-NITROANILINE	109376	198GP00208	109376007	WG	51.5	U	51.5	UJ	ug/L	CCL
SVOA	SW8270C	4-NITROANILINE	109376	198GP00215	109376008	WG	49	U	49	UJ	ug/L	CCL

Attachment 1 - Changed Qualifiers and Results
Zone K, SWMU 197 and 198 - Data Validation

Parameter Class	Analytical Method	Parameter	SDG	Lab Sample ID	Sample ID	Matrix	Lab Result	Lab Qual	Final Result	Final Qual	Units	Reason
SVOA	SW8270C	4-NITROANILINE	109376	198GP00115	109376013	WG	49.5	U	49.5	UJ	ug/L	CCL
SVOA	SW8270C	Benzoic acid	109376	197GP00108	109376001	WG	47.2	U	47.2	UJ	ug/L	CCL
SVOA	SW8270C	Benzoic acid	109376	197GP00115	109376002	WG	47.2	U	47.2	UJ	ug/L	CCL
SVOA	SW8270C	Benzoic acid	109376	197GP00208	109376003	WG	48.1	U	48.1	UJ	ug/L	CCL
SVOA	SW8270C	Benzoic acid	109376	197GP00215	109376004	WG	49.5	U	49.5	UJ	ug/L	CCL
SVOA	SW8270C	Benzoic acid	109376	198GP00108	109376005	WG	49	U	49	UJ	ug/L	CCL
SVOA	SW8270C	Benzoic acid	109376	198HP00108	109376006	WG	48.1	U	48.1	UJ	ug/L	CCL
SVOA	SW8270C	Benzoic acid	109376	198GP00208	109376007	WG	51.5	U	51.5	UJ	ug/L	CCL
SVOA	SW8270C	Benzoic acid	109376	198GP00215	109376008	WG	49	U	49	UJ	ug/L	CCL
SVOA	SW8270C	Benzoic acid	109376	198GP00115	109376013	WG	49.5	U	49.5	UJ	ug/L	CCL
SVOA	SW8270C	bis(2-ETHYLHEXYL) PHTHALATE	109376	197GP00108	109376001	WG	2.5	J	9.4	U	ug/L	BL
SVOA	SW8270C	bis(2-ETHYLHEXYL) PHTHALATE	109376	197GP00115	109376002	WG	2.9	J	9.4	U	ug/L	BL
SVOA	SW8270C	bis(2-ETHYLHEXYL) PHTHALATE	109376	197GP00208	109376003	WG	6	J	9.6	U	ug/L	BL
SVOA	SW8270C	bis(2-ETHYLHEXYL) PHTHALATE	109376	197GP00215	109376004	WG	2.8	J	9.9	U	ug/L	BL
SVOA	SW8270C	bis(2-ETHYLHEXYL) PHTHALATE	109376	198GP00108	109376005	WG	2.7	J	9.8	U	ug/L	BL
SVOA	SW8270C	bis(2-ETHYLHEXYL) PHTHALATE	109376	198HP00108	109376006	WG	2.6	J	9.6	U	ug/L	BL
SVOA	SW8270C	bis(2-ETHYLHEXYL) PHTHALATE	109376	198GP00208	109376007	WG	3	J	10.3	U	ug/L	BL
SVOA	SW8270C	bis(2-ETHYLHEXYL) PHTHALATE	109376	198GP00215	109376008	WG	3.4	J	9.8	U	ug/L	BL
SVOA	SW8270C	bis(2-ETHYLHEXYL) PHTHALATE	109376	198GP00115	109376013	WG	2.9	J	9.9	U	ug/L	BL
SVOA	SW8270C	bis(2-ETHYLHEXYL) PHTHALATE	112925	197SB00101	112925002	SO	33.5	J	359	U	ug/kg	BL
SVOA	SW8270C	bis(2-ETHYLHEXYL) PHTHALATE	112925	197SB00102	112925003	SO	41.5	J	364	U	ug/kg	BL
SVOA	SW8270C	bis(2-ETHYLHEXYL) PHTHALATE	112925	197SB00301	112925006	SO	36.6	J	343	U	ug/kg	BL
SVOA	SW8270C	bis(2-ETHYLHEXYL) PHTHALATE	112925	197SB00302	112925007	SO	34.1	J	361	U	ug/kg	BL
SVOA	SW8270C	bis(2-ETHYLHEXYL) PHTHALATE	112925	197SB00401	112925008	SO	466	=	466	U	ug/kg	BL
SVOA	SW8270C	bis(2-ETHYLHEXYL) PHTHALATE	112925	197SB00501	112925010	SO	39.5	J	369	U	ug/kg	BL
SVOA	SW8270C	bis(2-ETHYLHEXYL) PHTHALATE	112925	198SB00102	112925012	SO	292	J	369	U	ug/kg	BL
SVOA	SW8270C	bis(2-ETHYLHEXYL) PHTHALATE	112925	198SB00201	112925013	SO	38.8	J	348	U	ug/kg	BL
SVOA	SW8270C	bis(2-ETHYLHEXYL) PHTHALATE	112925	198SB00202	112925014	SO	151	J	360	U	ug/kg	BL
SVOA	SW8270C	bis(2-ETHYLHEXYL) PHTHALATE	112925	198SB00301	112925015	SO	35.9	J	355	U	ug/kg	BL
SVOA	SW8270C	bis(2-ETHYLHEXYL) PHTHALATE	112925	198SB00302	112925016	SO	36.3	J	371	U	ug/kg	BL
SVOA	SW8270C	bis(2-ETHYLHEXYL) PHTHALATE	112925	198SB00401	112925017	SO	44.7	J	348	U	ug/kg	BL
SVOA	SW8270C	bis(2-ETHYLHEXYL) PHTHALATE	112925	198CB00402	112925019	SO	44.1	J	370	U	ug/kg	BL
SVOA	SW8270C	HEXACHLOROCYCLOPENTADIENE	109376	197GP00108	109376001	WG	9.4	U	9.4	UJ	ug/L	IC

Parameter Class	Analytical Method	Parameter	SDG	Lab Sample ID	Sample ID	Matrix	Lab Result	Lab Qual	Final Result	Final Qual	Units	Reason
SVOA	SW8270C	HEXACHLOROCYCLOPENTADIENE	109376	197GP00115	109376002	WG	9.4	U	9.4	UJ	ug/L	IC
SVOA	SW8270C	HEXACHLOROCYCLOPENTADIENE	109376	197GP00208	109376003	WG	9.6	U	9.6	UJ	ug/L	IC
SVOA	SW8270C	HEXACHLOROCYCLOPENTADIENE	109376	197GP00215	109376004	WG	9.9	U	9.9	UJ	ug/L	IC
SVOA	SW8270C	HEXACHLOROCYCLOPENTADIENE	109376	198GP00108	109376005	WG	9.8	U	9.8	UJ	ug/L	IC
SVOA	SW8270C	HEXACHLOROCYCLOPENTADIENE	109376	198HP00108	109376006	WG	9.6	U	9.6	UJ	ug/L	IC
SVOA	SW8270C	HEXACHLOROCYCLOPENTADIENE	109376	198GP00208	109376007	WG	10.3	U	10.3	UJ	ug/L	IC
SVOA	SW8270C	HEXACHLOROCYCLOPENTADIENE	109376	198GP00215	109376008	WG	9.8	U	9.8	UJ	ug/L	IC
SVOA	SW8270C	HEXACHLOROCYCLOPENTADIENE	109376	198GP00115	109376013	WG	9.9	U	9.9	UJ	ug/L	IC
VOA	SW8260B	1,2,3-Trichlorobenzene	112925	197SB00502	112925001	SO	6.6	U	6.6	UJ	ug/kg	MSL
VOA	SW8260B	1,2,4-TRICHLOROBENZENE	112925	197SB00502	112925001	SO	6.6	U	6.6	UJ	ug/kg	MSL
VOA	SW8260B	2-Chloroethyl vinyl ether	109376	198GP00108	109376005	WG	10	U	10	UJ	ug/L	MSL
VOA	SW8260B	2-Chloroethyl vinyl ether	112925	197SB00402	112925009	SO	13.2	U	13.2	UJ	ug/kg	CCL
VOA	SW8260B	2-Chloroethyl vinyl ether	112925	197SB00501	112925010	SO	15.5	U	15.5	UJ	ug/kg	CCL
VOA	SW8260B	2-Chloroethyl vinyl ether	112925	198SB00101	112925011	SO	13.5	U	13.5	UJ	ug/kg	CCL
VOA	SW8260B	2-Chloroethyl vinyl ether	112925	198SB00102	112925012	SO	12.4	U	12.4	UJ	ug/kg	CCL
VOA	SW8260B	2-Chloroethyl vinyl ether	112925	198SB00201	112925013	SO	12.8	U	12.8	UJ	ug/kg	CCL
VOA	SW8260B	2-Chloroethyl vinyl ether	112925	198SB00202	112925014	SO	13.6	U	13.6	UJ	ug/kg	CCL
VOA	SW8260B	2-Chloroethyl vinyl ether	112925	198SB00301	112925015	SO	13.4	U	13.4	UJ	ug/kg	CCL
VOA	SW8260B	2-Chloroethyl vinyl ether	112925	198SB00302	112925016	SO	13.4	U	13.4	UJ	ug/kg	CCL
VOA	SW8260B	2-Chloroethyl vinyl ether	112925	198SB00401	112925017	SO	13.5	U	13.5	UJ	ug/kg	CCL
VOA	SW8260B	2-Chloroethyl vinyl ether	112925	198SB00402	112925018	SO	13.6	U	13.6	UJ	ug/kg	CCL
VOA	SW8260B	2-Chloroethyl vinyl ether	112925	198CB00402	112925019	SO	14	U	14	UJ	ug/kg	CCL
VOA	SW8260B	2-HEXANONE	112925	197SB00402	112925009	SO	13.2	U	13.2	UJ	ug/kg	CCL
VOA	SW8260B	2-HEXANONE	112925	197SB00501	112925010	SO	15.5	U	15.5	UJ	ug/kg	CCL
VOA	SW8260B	2-HEXANONE	112925	198SB00101	112925011	SO	13.5	U	13.5	UJ	ug/kg	CCL
VOA	SW8260B	2-HEXANONE	112925	198SB00102	112925012	SO	12.4	U	12.4	UJ	ug/kg	CCL
VOA	SW8260B	2-HEXANONE	112925	198SB00201	112925013	SO	12.8	U	12.8	UJ	ug/kg	CCL
VOA	SW8260B	2-HEXANONE	112925	198SB00202	112925014	SO	13.6	U	13.6	UJ	ug/kg	CCL
VOA	SW8260B	2-HEXANONE	112925	198SB00301	112925015	SO	13.4	U	13.4	UJ	ug/kg	CCL
VOA	SW8260B	2-HEXANONE	112925	198SB00302	112925016	SO	13.4	U	13.4	UJ	ug/kg	CCL
VOA	SW8260B	2-HEXANONE	112925	198SB00401	112925017	SO	13.5	U	13.5	UJ	ug/kg	CCL
VOA	SW8260B	2-HEXANONE	112925	198SB00402	112925018	SO	13.6	U	13.6	UJ	ug/kg	CCL
VOA	SW8260B	2-HEXANONE	112925	198CB00402	112925019	SO	14	U	14	UJ	ug/kg	CCL

Parameter Class	Analytical Method	Parameter	SDG	Lab Sample ID	Sample ID	Matrix	Lab Result	Lab Qual	Final Result	Final Qual	Units	Reason
VOA	SW8260B	ACETONE	109376	197GP00108	109376001	WG	3.6	J	10	U	ug/L	BL
VOA	SW8260B	ACETONE	109376	197GP00115	109376002	WG	3.8	J	10	U	ug/L	BL
VOA	SW8260B	ACETONE	109376	197GP00208	109376003	WG	10.5	=	10.5	U	ug/L	BL
VOA	SW8260B	ACETONE	109376	197GP00215	109376004	WG	3	J	10	U	ug/L	BL
VOA	SW8260B	ACETONE	109376	198GP00108	109376005	WG	2.8	J	10	U	ug/L	BL
VOA	SW8260B	ACETONE	109376	198HP00108	109376006	WG	4	J	10	UJ	ug/L	BL, CCL
VOA	SW8260B	ACETONE	109376	198GP00208	109376007	WG	5.3	J	10	UJ	ug/L	BL, CCL
VOA	SW8260B	ACETONE	109376	198GP00215	109376008	WG	4	J	10	UJ	ug/L	BL, CCL
VOA	SW8260B	ACETONE	109376	198GP00115	109376013	WG	10.2	=	10.2	UJ	ug/L	BL, CCL
VOA	SW8260B	ACETONE	112925	197SB00502	112925001	SO	13.2	U	13.2	UJ	ug/kg	MSL, CCL
VOA	SW8260B	ACETONE	112925	197SB00101	112925002	SO	32.5	=	32.5	J	ug/kg	CCL
VOA	SW8260B	ACETONE	112925	197SB00102	112925003	SO	12.8	U	12.8	UJ	ug/kg	CCL
VOA	SW8260B	ACETONE	112925	197SB00201	112925004	SO	13.3	=	13.3	J	ug/kg	CCL
VOA	SW8260B	ACETONE	112925	197SB00202	112925005	SO	13	U	13	UJ	ug/kg	CCL
VOA	SW8260B	ACETONE	112925	197SB00301	112925006	SO	13	U	13	UJ	ug/kg	CCL
VOA	SW8260B	ACETONE	112925	197SB00302	112925007	SO	12.4	U	12.4	UJ	ug/kg	CCL
VOA	SW8260B	ACETONE	112925	197SB00401	112925008	SO	12.4	J	12.4	J	ug/kg	CCL
VOA	SW8260B	ACETONE	112925	197SB00402	112925009	SO	13.2	U	13.2	UJ	ug/kg	CCL
VOA	SW8260B	ACETONE	112925	197SB00501	112925010	SO	22.5	=	22.5	J	ug/kg	CCL
VOA	SW8260B	ACETONE	112925	198SB00101	112925011	SO	5.5	J	5.5	J	ug/kg	CCL
VOA	SW8260B	ACETONE	112925	198SB00102	112925012	SO	12.4	U	12.4	UJ	ug/kg	CCL
VOA	SW8260B	ACETONE	112925	198SB00201	112925013	SO	11	J	11	J	ug/kg	CCL
VOA	SW8260B	ACETONE	112925	198SB00202	112925014	SO	13.6	U	13.6	UJ	ug/kg	CCL
VOA	SW8260B	ACETONE	112925	198SB00301	112925015	SO	18	=	18	J	ug/kg	CCL
VOA	SW8260B	ACETONE	112925	198SB00302	112925016	SO	13.4	U	13.4	UJ	ug/kg	CCL
VOA	SW8260B	ACETONE	112925	198SB00401	112925017	SO	18.8	=	18.8	J	ug/kg	CCL
VOA	SW8260B	ACETONE	112925	198SB00402	112925018	SO	13.6	U	13.6	UJ	ug/kg	CCL
VOA	SW8260B	ACETONE	112925	198CB00402	112925019	SO	14	U	14	UJ	ug/kg	CCL
VOA	SW8260B	CHLOROMETHANE	112925	197SB00402	112925009	SO	13.2	U	13.2	UJ	ug/kg	CCL
VOA	SW8260B	CHLOROMETHANE	112925	197SB00501	112925010	SO	15.5	U	15.5	UJ	ug/kg	CCL
VOA	SW8260B	CHLOROMETHANE	112925	198SB00101	112925011	SO	13.5	U	13.5	UJ	ug/kg	CCL
VOA	SW8260B	CHLOROMETHANE	112925	198SB00102	112925012	SO	12.4	U	12.4	UJ	ug/kg	CCL
VOA	SW8260B	CHLOROMETHANE	112925	198SB00201	112925013	SO	12.8	U	12.8	UJ	ug/kg	CCL

Parameter Class	Analytical Method	Parameter	SDG	Lab Sample ID	Sample ID	Matrix	Lab Result	Lab Qual	Final Result	Final Qual	Units	Reason
VOA	SW8260B	CHLOROMETHANE	112925	198SB00202	112925014	SO	13.6	U	13.6	UJ	ug/kg	CCL
VOA	SW8260B	CHLOROMETHANE	112925	198SB00301	112925015	SO	13.4	U	13.4	UJ	ug/kg	CCL
VOA	SW8260B	CHLOROMETHANE	112925	198SB00302	112925016	SO	13.4	U	13.4	UJ	ug/kg	CCL
VOA	SW8260B	CHLOROMETHANE	112925	198SB00401	112925017	SO	13.5	U	13.5	UJ	ug/kg	CCL
VOA	SW8260B	CHLOROMETHANE	112925	198SB00402	112925018	SO	13.6	U	13.6	UJ	ug/kg	CCL
VOA	SW8260B	CHLOROMETHANE	112925	198CB00402	112925019	SO	14	U	14	UJ	ug/kg	CCL
VOA	SW8260B	2-BUTANONE (MEK)	109376	198HP00108	109376006	WG	10	U	10	UJ	ug/L	CCL
VOA	SW8260B	2-BUTANONE (MEK)	109376	198GP00208	109376007	WG	10	U	10	UJ	ug/L	CCL
VOA	SW8260B	2-BUTANONE (MEK)	109376	198GP00215	109376008	WG	10	U	10	UJ	ug/L	CCL
VOA	SW8260B	2-BUTANONE (MEK)	109376	198GP00115	109376013	WG	10	U	10	UJ	ug/L	CCL
VOA	SW8260B	2-BUTANONE (MEK)	112925	197SB00402	112925009	SO	13.2	U	13.2	UJ	ug/kg	CCL
VOA	SW8260B	2-BUTANONE (MEK)	112925	197SB00501	112925010	SO	15.5	U	15.5	UJ	ug/kg	CCL
VOA	SW8260B	2-BUTANONE (MEK)	112925	198SB00101	112925011	SO	13.5	U	13.5	UJ	ug/kg	CCL
VOA	SW8260B	2-BUTANONE (MEK)	112925	198SB00102	112925012	SO	12.4	U	12.4	UJ	ug/kg	CCL
VOA	SW8260B	2-BUTANONE (MEK)	112925	198SB00201	112925013	SO	12.8	U	12.8	UJ	ug/kg	CCL
VOA	SW8260B	2-BUTANONE (MEK)	112925	198SB00202	112925014	SO	13.6	U	13.6	UJ	ug/kg	CCL
VOA	SW8260B	2-BUTANONE (MEK)	112925	198SB00301	112925015	SO	13.4	U	13.4	UJ	ug/kg	CCL
VOA	SW8260B	2-BUTANONE (MEK)	112925	198SB00302	112925016	SO	13.4	U	13.4	UJ	ug/kg	CCL
VOA	SW8260B	2-BUTANONE (MEK)	112925	198SB00401	112925017	SO	13.5	U	13.5	UJ	ug/kg	CCL
VOA	SW8260B	2-BUTANONE (MEK)	112925	198SB00402	112925018	SO	13.6	U	13.6	UJ	ug/kg	CCL
VOA	SW8260B	2-BUTANONE (MEK)	112925	198CB00402	112925019	SO	14	U	14	UJ	ug/kg	CCL
VOA	SW8260B	TOLUENE	109376	198HP00108	109376006	WG	0.51	J	5	U	ug/L	BL
VOA	SW8260B	TOLUENE	109376	198GP00115	109376013	WG	0.47	J	5	U	ug/L	BL
VOA	SW8260B	TOLUENE	112925	197SB00502	112925001	SO	0.59	JB	6.6	U	ug/kg	BL
VOA	SW8260B	TOLUENE	112925	197SB00101	112925002	SO	0.61	JB	6.5	U	ug/kg	BL
VOA	SW8260B	TOLUENE	112925	197SB00102	112925003	SO	0.61	JB	6.4	U	ug/kg	BL
VOA	SW8260B	TOLUENE	112925	197SB00201	112925004	SO	0.6	JB	6.4	U	ug/kg	BL
VOA	SW8260B	TOLUENE	112925	197SB00202	112925005	SO	0.57	JB	6.5	U	ug/kg	BL
VOA	SW8260B	TOLUENE	112925	197SB00301	112925006	SO	0.55	JB	6.5	U	ug/kg	BL
VOA	SW8260B	TOLUENE	112925	197SB00302	112925007	SO	0.55	JB	6.2	U	ug/kg	BL
VOA	SW8260B	TOLUENE	112925	197SB00401	112925008	SO	0.68	JB	6.6	U	ug/kg	BL
VOA	SW8260B	TOLUENE	112925	197SB00402	112925009	SO	0.67	JB	6.6	U	ug/kg	BL
VOA	SW8260B	TOLUENE	112925	197SB00501	112925010	SO	0.8	JB	7.8	U	ug/kg	BL

Attachment 1 - Changed Qualifiers and Results
Zone K, SWMU 197 and 198 - Data Validation

Parameter Class	Analytical Method	Parameter	SDG	Lab Sample ID	Sample ID	Matrix	Lab Result	Lab Qual	Final Result	Final Qual	Units	Reason
VOA	SW8260B	TOLUENE	112925	198SB00101	112925011	SO	0.61	JB	6.7	U	ug/kg	BL
VOA	SW8260B	TOLUENE	112925	198SB00102	112925012	SO	0.47	JB	6.2	U	ug/kg	BL
VOA	SW8260B	TOLUENE	112925	198SB00201	112925013	SO	0.58	JB	6.4	U	ug/kg	BL
VOA	SW8260B	TOLUENE	112925	198SB00202	112925014	SO	0.7	JB	6.8	U	ug/kg	BL
VOA	SW8260B	TOLUENE	112925	198SB00301	112925015	SO	0.64	JB	6.7	U	ug/kg	BL
VOA	SW8260B	TOLUENE	112925	198SB00302	112925016	SO	0.58	JB	6.7	U	ug/kg	BL
VOA	SW8260B	TOLUENE	112925	198SB00401	112925017	SO	0.58	JB	6.8	U	ug/kg	BL
VOA	SW8260B	TOLUENE	112925	198SB00402	112925018	SO	0.54	JB	6.8	U	ug/kg	BL
VOA	SW8260B	TOLUENE	112925	198CB00402	112925019	SO	0.6	JB	7	U	ug/kg	BL
VOA	SW8260B	Vinyl acetate	112925	197SB00502	112925001	SO	13.2	U	13.2	UJ	ug/kg	MSL
VOA	SW8260B	Vinyl acetate	112925	197SB00402	112925009	SO	13.2	U	13.2	UJ	ug/kg	CCL
VOA	SW8260B	Vinyl acetate	112925	197SB00501	112925010	SO	15.5	U	15.5	UJ	ug/kg	CCL
VOA	SW8260B	Vinyl acetate	112925	198SB00101	112925011	SO	13.5	U	13.5	UJ	ug/kg	CCL
VOA	SW8260B	Vinyl acetate	112925	198SB00102	112925012	SO	12.4	U	12.4	UJ	ug/kg	CCL
VOA	SW8260B	Vinyl acetate	112925	198SB00201	112925013	SO	12.8	U	12.8	UJ	ug/kg	CCL
VOA	SW8260B	Vinyl acetate	112925	198SB00202	112925014	SO	13.6	U	13.6	UJ	ug/kg	CCL
VOA	SW8260B	Vinyl acetate	112925	198SB00301	112925015	SO	13.4	U	13.4	UJ	ug/kg	CCL
VOA	SW8260B	Vinyl acetate	112925	198SB00302	112925016	SO	13.4	U	13.4	UJ	ug/kg	CCL
VOA	SW8260B	Vinyl acetate	112925	198SB00401	112925017	SO	13.5	U	13.5	UJ	ug/kg	CCL
VOA	SW8260B	Vinyl acetate	112925	198SB00402	112925018	SO	13.6	U	13.6	UJ	ug/kg	CCL
VOA	SW8260B	Vinyl acetate	112925	198CB00402	112925019	SO	14	U	14	UJ	ug/kg	CCL

Appendix D

PROJECT NUMBER	WELL NUMBER	
258814	198GW001	SHEET 1 OF 1

CH2MHILL

WELL COMPLETION DIAGRAM

PROJECT : Charleston Naval Complex | LOCATION : SWMU 197/198 | NORTHING 387681.2
DRILLING CONTRACTOR : Prosonic Drilling Corporation | EASTING 2300211.1
DRILLING METHOD AND EQUIPMENT USED : Truck mounted drill rig with hollow stem augers
WATER LEVELS :6.34 | START : 5-24-05 | END : 5-24-05 | LOGGER : Darryl Gates

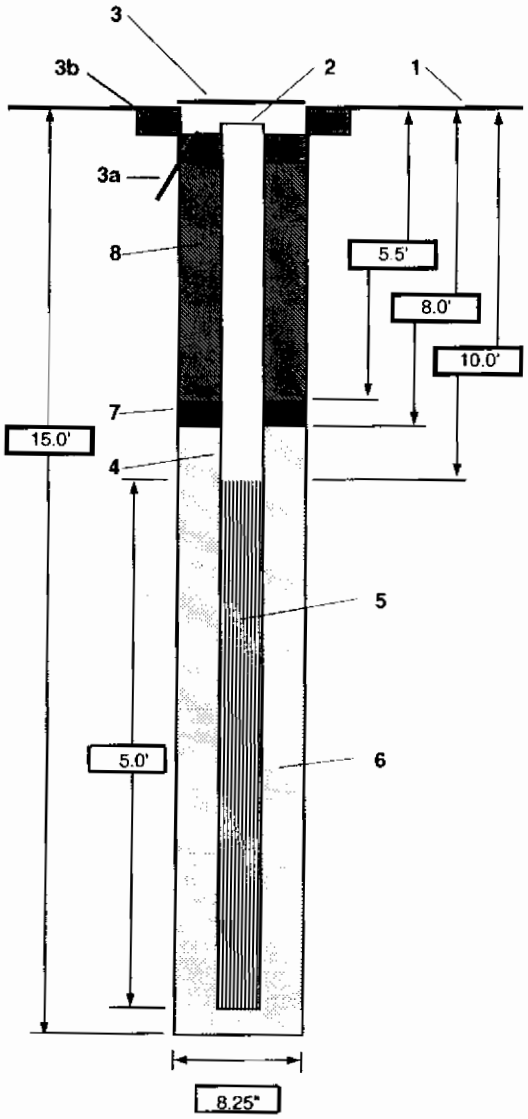

1- Ground elevation at well: Not obtained

2- Top of casing elevation: 39.97

3- Wellhead protection cover type: Bolt-down manhole cover.
a) drain tube? No
b) concrete pad dimensions: 2' X 2' X 6"

4- Dia./type of well casing: 2-inch / PVC

5- Type/slot size of screen: PVC / .010-slot

6- Type screen filter: 20/30 silica sand
a) Quantity used: 3 (50 lb) bags

7- Type of seal: Barroid bentonite chips
a) Quantity used: 1.0 (50 lb) bag

8- Grout
a) Grout mix used: Type I Portland cement w/ 5% bentonite
b) Method of placement: Trimmie

Development method: Surge block / Submersible pump

Development time: three hours and 22 minutes

Estimated purge volume: 35 gallons

Comments: Well developed clear.

Final field parameters collected during well development on 5-25-05

Time/	pH	Cond	Temp	Turb (NTUs)
1001	5.75	.086	20	9
1003	5.82	.087	20	7
1005	5.85	.085	20	7

Due to hight turbidity, 35 gallons purged prior to taking readings.
Start surge at 1448 End Surge at 1456
Start Development at 1458-1700 complete at 1010 on 5-25-05

PROJECT NUMBER	WELL NUMBER	
258814	197GW001	SHEET 1 OF 1

CH2MHILL

WELL COMPLETION DIAGRAM

PROJECT : Charleston Naval Complex LOCATION : SWMU 197/198 NORTHING 387714.8
DRILLING CONTRACTOR : Prosonic Drilling Corporation EASTING 2300125.5
DRILLING METHOD AND EQUIPMENT USED : Truck mounted drill rig with hollow stem augers
WATER LEVELS :7.14 START : 5-10-05 END : 5-10-05 LOGGER : Darryl Gates

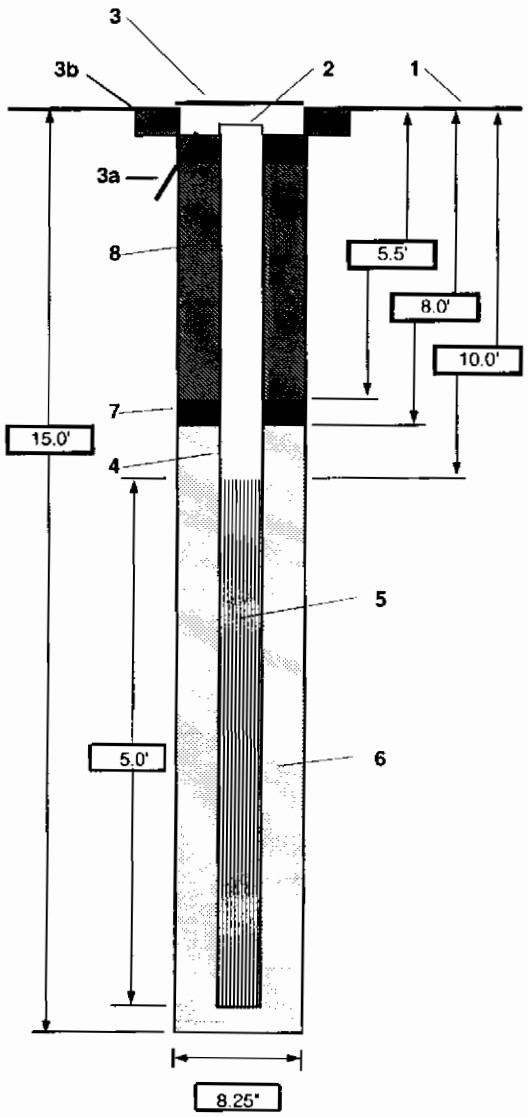

1- Ground elevation at well	Not obtained
2- Top of casing elevation	40.71
3- Wellhead protection cover type	Bolt-down manhole cover.
a) drain tube?	No
b) concrete pad dimensions	2' X 2' X 6"
4- Dia./type of well casing	2-inch / PVC
5- Type/slot size of screen	PVC / .010-slot
6- Type screen filter	20/30 silica sand
a) Quantity used	3 (50 lb) bags
7- Type of seal	Barroid bentonite chips
a) Quantity used	1.0 (50 lb) bag
8- Grout	
a) Grout mix used	Type I Portland cement w/ 5% bentonite
b) Method of placement	Trimmie
Development method	Surge block / Submersible pump
Development time	three hours and 22 minutes
Estimated purge volume	40 gallons

Comments Well developed clear.
Final field parameters collected during well development on 5-24-05

Time/	pH	Cond	Temp	Turb (NTUs)
1426	4.59	.059	19.8	10
1428	4.60	.058	19.8	10
1430	4.61	.058	19.8	10

Due to hight turbidity, 40 gallons purged prior to taking readings.
Start surge at 1132 End Surge at 1140
Start Development at 1142 complete at 1430

CH2MHILL

WELL PURGE AND SAMPLING FIELD SHEET

WELL NUMBER: 197GW001 **SITE:** SWMU 197 / 198

FIELD CREW: Andrew O'Conor / Darryl Gates

		CASING DIAMETER		GAL/FT OF CASING	
DEPTH TO WATER (FT):	6.51				
WELL DEPTH (FT):	15	2 IN.		0.1632	
WATER COLUMN (FT):	8.49	4 IN.		0.6528	
GAL/FT OF CASING	0.1632	6 IN.		1.4688	
CASING VOLUME (GAL)	1.38	8 IN.		2.611	
NO. OF VOLUMES min.(3)	3	10 IN.		4.0797	
PURGE VOLUME (GAL)	4.15	12 IN.		5.8748	

METHOD OF PURGING

PUMP: Peristaltic	**OTHER:**	**BAILER** : TEFLON, SS ,OTHER:
TIME ON: 1500		BAILER VOL.. (gal) .25 / .33
FLOW RATE (gpm): 0.17		REQUIRED PULLS:
PUMP TIME (min): 24		VOL. PURGED (gals):
VOL. PURGED (gals): 4.1		OTHER:

FIELD PARAMETERS	FIELD MEASUREMENTS					
	Initial	1st	2nd	3rd	5th	6th
TIME	1501	1506	1511	1518	1524	
VOL. (gal)		1	2	3	4	
pH (s.units)	5.71	5.16	5.07	4.98	5.02	
COND.(S/m)	0.068	0.074	0.067	0.068	0.072	
TURBIDITY(NTUs)	183	213	67.2	15.5	10.2	
TEMP.(C)	20.78	20.49	20.27	20.42	20.25	
DO.(mg/L)	11.52	6.08	5.62	3.53	1.05	
ORP(mV)	111	22	4	-14	-27	

OBSERVATIONS

COLOR:

ODOR:

COMMENTS: filtered (.45 micron) and unfiltered samples

SAMPLE DATE/ TIME: 6-9-05 / 1525

CH2MHILL

WELL PURGE AND SAMPLING FIELD SHEET

WELL NUMBER: 198GW001 **SITE:** SWMU 197 / 198

FIELD CREW: Andrew O'Conor / Darryl Gates

		CASING DIAMETER		GAL/FT OF CASING	
DEPTH TO WATER (FT):	5.85				
WELL DEPTH (FT):	15	2 IN.		0.1632	
WATER COLUMN (FT):	9.15	4 IN.		0.6528	
GAL/FT OF CASING	0.1632	6 IN.		1.4688	
CASING VOLUME (GAL)	1.49	8 IN.		2.611	
NO. OF VOLUMES min.(3)	3	10 IN.		4.0797	
PURGE VOLUME (GAL)	4.47	12 IN.		5.8748	

METHOD OF PURGING

PUMP: Peristaltic	**OTHER:**	**BAILER** : TEFLON, SS ,OTHER:
TIME ON: 1500		BAILER VOL.. (gal) .25 / .33
FLOW RATE (gpm): 0.14		REQUIRED PULLS:
PUMP TIME (min): 30		VOL. PURGED (gals):
VOL. PURGED (gals): 4.4		OTHER:

FIELD PARAMETERS	FIELD MEASUREMENTS					
	Initial	1st	2nd	3rd	5th	6th
TIME	1501	1510	1520	1530		
VOL. (gal)	I	1	2	3		
pH (s.units)	5.87	6.01	6.1	6.06		
COND.(S/m)	0.113	0.11	0.106	0.103		
TURBIDITY(NTUs)	216	6.3	0	0		
TEMP.(C)	22.05	21.95	22.1	21.89		
DO.(mg/L)	0	0	0	0		
ORP(mV)	23	-19	-44	-69		

OBSERVATIONS

COLOR:

ODOR:

COMMENTS: filtered (.45 micron) and unfiltered samples

SAMPLE DATE/ TIME: 6-9-05 / 1532

CH2MHILL

PROJECT NUMBER: 258814	DPT NUMBER: K197GP001	page 1 of 1

DPT GROUNDWATER SAMPLE LOG

PROJECT : Charleston Naval Complex, Charleston, SC **LOCATION :** SWMU 197 **NORTHING:** 387756.1

ELEVATION : 40.57 **DRILLING CONTRACTOR :** Prosonic Drilling Corp. **License #**1435 **EASTING:** 2300114.7

DRILLING METHOD AND EQUIPMENT USED : Direct-Push Technology, Geoprobe

START : 3/18/04 / 1425 **END:** 3/18/05 / 1450 **LOGGER :** Darryl Gates

DEPTH BELOW SURFACE (FT)	SAMPLE INTERVAL	SOIL DESCRIPTION SOIL NAME, USCS GROUP SYMBOL, COLOR, MOISTURE CONTENT, RELATIVE DENSITY, OR CONSISTENCY, SOIL STRUCTURE, MINERALOGY.	COMMENTS TESTS, INSTRUMENTATION ABANDONMENT METHOD
5			
		Not Applicable	Collected Groundwater Sample
10			
		Not Applicable	Collected Groundwater Sample
15			Abandoned with neat cement by force injection
		End of Boring	
20			
25			
30			

CH2MHILL

PROJECT NUMBER: 258814	DPT NUMBER: K197GP002	page 1 of 1

DPT GROUNDWATER SAMPLE LOG

PROJECT : Charleston Naval Complex, Charleston, SC **LOCATION :** SWMU 197 **NORTHING:** 387711.9

ELEVATION : 40.69 **DRILLING CONTRACTOR :** Prosonic Drilling Corp. **License #1435** **EASTING:** 2300127.5

DRILLING METHOD AND EQUIPMENT USED : Direct-Push Technology, Geoprobe

START : 3/18/04 / 1515 **END:** 3/18/05 / 1600 **LOGGER :** Darryl Gates

DEPTH BELOW SURFACE (FT)	SAMPLE INTERVAL	SOIL DESCRIPTION: SOIL NAME, USCS GROUP SYMBOL, COLOR, MOISTURE CONTENT, RELATIVE DENSITY, OR CONSISTENCY, SOIL STRUCTURE, MINERALOGY.	COMMENTS: TESTS, INSTRUMENTATION ABANDONMENT METHOD
5			
	[illegible]	Not Applicable	Collected Groundwater Sample
10			
	[illegible]	Not Applicable	Collected Groundwater Sample
15			Abandoned with neat cement by force injection
		End of Boring	
20			
25			
30			

CH2MHILL

PROJECT NUMBER: 258814	DPT NUMBER: K198GP001	page 1 of 1

DPT GROUNDWATER SAMPLE LOG

PROJECT : Charleston Naval Complex, Charleston, SC **LOCATION :** SWMU 198 **NORTHING:** 387690.7

ELEVATION : 40.08 **DRILLING CONTRACTOR :** Prosonic Drilling Corp. **License #**1435 **EASTING:** 2300220.3

DRILLING METHOD AND EQUIPMENT USED : Direct-Push Technology, Geoprobe

START : 3/18/04 / 1625 **END:** 3/18/05 / 1710 **LOGGER :** Darryl Gates

DEPTH BELOW SURFACE (FT)	SAMPLE INTERVAL	SOIL DESCRIPTION: SOIL NAME, USCS GROUP SYMBOL, COLOR, MOISTURE CONTENT, RELATIVE DENSITY, OR CONSISTENCY, SOIL STRUCTURE, MINERALOGY.	COMMENTS: TESTS, INSTRUMENTATION ABANDONMENT METHOD
5			
	6.0 to 8.0	Not Applicable	Collected Groundwater Sample
10			
	13.0 to 15.0	Not Applicable	Collected Groundwater Sample
15			Abandoned with neat cement by force injection
		End of Boring	
20			
25			
30			

CH2MHILL

PROJECT NUMBER: 258814	DPT NUMBER: K198GP002	page 1 of 1

DPT GROUNDWATER SAMPLE LOG

PROJECT : Charleston Naval Complex, Charleston, SC **LOCATION :** SWMU 198 **NORTHING:** 387661.5

ELEVATION : 40.42 **DRILLING CONTRACTOR :** Prosonic Drilling Corp. **License #**1435 **EASTING:** 2300224.0

DRILLING METHOD AND EQUIPMENT USED : Direct-Push Technology, Geoprobe

START : 3/19/04 / 0720 **END:** 3/19/05 / 0845 **LOGGER :** Darryl Gates

DEPTH BELOW SURFACE (FT)	SAMPLE INTERVAL	SOIL DESCRIPTION: SOIL NAME, USCS GROUP SYMBOL, COLOR, MOISTURE CONTENT, RELATIVE DENSITY, OR CONSISTENCY, SOIL STRUCTURE, MINERALOGY.	COMMENTS: TESTS, INSTRUMENTATION ABANDONMENT METHOD
5			
		Not Applicable	Collected Groundwater Sample
10			
		Not Applicable	Collected Groundwater Sample
15			Abandoned with neat cement by force injection
		End of Boring	
20			
25			
30			

Appendix E

CH2MHILL

CH2M HILL
3011 SW Williston Road
Gainesville, FL
32608-3928
P.O. Box 147009
Gainesville, FL
32614-7009
TEL 352.335.7991
FAX 352.335.2959

May 16, 2005

Mr. David Scaturo
South Carolina Department of Health and
Environmental Control
Bureau of Land and Waste Management
2600 Bull Street
Columbia, SC 29201

Re: Responses to SCDHEC Comments on the RFI Report -- SWMUs 197 & 198, Zone K, Revision 0

Dear Mr. Scaturo:

Enclosed please find two copies of CH2M-Jones' Responses to SCDHEC Comments on the RFI Report (Revision 0, dated November 12, 2004) for SWMUs 197 & 198 in Zone K of the Charleston Naval Complex (CNC). This response to comments has been prepared pursuant to agreements by the CNC BRAC Cleanup Team for completing the RCRA Corrective Action process.

Please contact me at 352/335-5877, ext. 2280, if you have any questions or comments.

Sincerely,

CH2M HILL

Dean Williamson, P.E.

cc: Dann Spariosu/USEPA, w/att
Rob Harrell/Navy, w/att
Gary Foster/CH2M HILL, w/att

This document presents CH2M-Jones' responses to the South Carolina Department of Health and Environmental Control's (SCDHEC's) comments on the *RFI Report, SWMUs 197 and 198, Zone K, Revision 0* (CH2M-Jones, 2004).

Engineering Comments Prepared by Jerry Stamps, March 25, 2005

1. **Section 3.3.2 Groundwater Sampling:**
   According to the text, the groundwater samples collected via Direct Push Technology were not filtered in the field prior to analysis. Consequently, the results were not screened and, thus, omitted from the risk assessment. Furthermore, Appendix B presents the results of the metals analysis; however, the results of full TAL metals analysis are not presented. Full metals analysis must be presented in accordance with the work plan, which states that groundwater samples will be analyzed for metals using method 6010B of SW-846. The metals results must be screened appropriately and incorporated into the risk assessment as appropriate.

   CH2M-Jones Response:
   The unfiltered results will be presented, screened, and evaluated as appropriate. Also, per a request and comment from the Division of Hydrogeology, new groundwater monitoring wells will be installed and properly developed. After development, groundwater samples will be collected and analyzed for metals. These results will provide representative information regarding concentrations of metals in groundwater that are relatively unaffected by turbidity. These new data will also be incorporated into the risk assessment.

2. **Table 4-1:**
   Footnote (a) should be Residential RBC rather than Industrial.

   CH2M-Jones Response:
   The footnote will be revised.

Risk Assessment Comment Prepared by Susan Byrd

1. **Section 3.3, Proposed Sampling and Analysis:**
   Section 3.3, *Proposed Sampling and Analysis*, states that the unfiltered groundwater samples were not screened in this report due to elevated turbidity levels. Since COPC screening was not conducted for the inorganic analysis, the Department recommends the collection of additional groundwater samples using the EPA recommended 1.0 micron filter. A comparison of the data from the filtered and the previously unfiltered samples should be discussed in the revised report. Additional groundwater samples should be analyzed for TAL metals.

   CH2M-Jones Response:
   As noted in the response to a comment from the Division of Hydrogeology, new groundwater monitoring wells will be installed at SWMUs 197 and 198 and properly developed. After development, groundwater samples will be collected and analyzed for unfiltered metals. These results will provide representative water quality information on metals concentrations in groundwater at the site. These data will screened against screening criteria and incorporated into the risk assessment as appropriate. The results for the previous unfiltered groundwater samples collected using DPT will also be screened and discussed.

Hydrogeology Comments Prepared by Jim Bowman

1. <u>Section 2.3, Site Geology and Hydrogeology, Page 2-3, Lines 10-13:</u>
   The stratigraphic unit designations that are used in the text, Qs and Qcs, are different from the designations used in the Lithologic Cross Sections (Figure 2-2 and 2-3). This discrepancy must be corrected.

   CH2M-Jones Response:
   The text will be revised to be consistent with the figures.

2. <u>Section 2.3, Site Geology and Hydrogeology, Page 2-3, Line 16:</u>
   This sentence states that the Ashley Formation (Ta) is below the Qs unit. However, the text in Line 13 states that the Qcs unit is below the Qs unit. These contradictory statements must be corrected.

   CH2M-Jones Response:
   The text will be revised to eliminate the contradiction.

3. <u>General Comment:</u>
   The RI Report should discuss the possible source areas for the COPCs detected in the SWMU 197 and 198 samples. Previous work has been performed in Zone K in the vicinity of SWMU 197 and 198. Relevant soil sampling data from these previous Zone K investigations and information related to all possible source areas must be presented in the RI to evaluate whether or not the SWMU 197/198 COPCs are related to releases from other SWMUs within Zone K, as well as identify the other source area SWMUs.

   CH2M-Jones Response:
   We don't believe it is necessary to speculate on the potential sources of COPCs from outside of SWMUs 197 and 198. COPCs are not COCs and are not chemicals that have been found to pose an unacceptable risk. Therefore, the RFI does not need speculative discussions about these COPCs regarding their potential origin from a source outside of the SWMU. The approach used to prepare the RFI report is consistent with the format and approach used previously at the CNC for many RFI reports and as agreed upon by the CNC BRAC Cleanup Team, which includes SCDHEC. The current format of the RFI report meets RCRA requirements as determined by the Corrective Action Engineering Section of the Division of Waste Management.

   If COCs (not COPCs) at the site are identified, which the data suggest may have originated outside the area of the SWMUs, an appropriate discussion of their potential source of origin will be provided.

4. The condition pertaining to reporting (Condition #2) in the temporary well installation approval (#HW-04-027) for the SWMU 197/198 RI has not been carried out. This condition requires that the latitude and longitude coordinates, surveyed elevations, actual boring and/or geologist logs for the SWMU 197/198 Geoprobe borings be submitted within the RI Report. The RI Report should be revised to meet Condition #2.

   CH2M-Jones Response:
   The requested information will be included in the revised RFI Report for SWMUs 197 and 198.

5. Metals concentrations in SWMU 197/198 groundwater exceed Maximum Contaminant Levels (MCLs) for arsenic and chromium and the action level for lead. The RI Report attributes the elevated metals concentrations to groundwater sample turbidity and recommends a NFA for SWMU 197/198 groundwater. This is not acceptable to the Division of Hydrogeology. Non-turbid groundwater samples should be collected from monitoring wells to be installed at the previous Geoprobe locations where metals MCLs were exceeded. The newly installed monitoring wells should be properly developed per R.61-71.H.2.d of the SC Well Standards and Regulations. All monitoring wells should be properly developed until clear, sediment-free water samples are obtained. Specific conductance, temperature, turbidity and pH measurements should be taken during development of the wells. A log recording the values of these parameters should be maintained during development of the wells. The Division of Hydrogeology is aware that filtering of groundwater samples has been discussed as a means to reduce turbidity and thereby obtain a sample more representative of the uppermost aquifer. This approach is unacceptable. All regulatory decisions concerning SWMU 197/198 groundwater will be based on total metals data (i.e., unfiltered samples obtained from properly developed monitoring wells).

CH2M-Jones Response:
A new monitoring well will be installed at each SWMU, within approximately 10 feet of one of the previous DPT locations. The depth of the wells will be approximately 15 feet below land surface (ft bls), to coincide with the depth of collection of a previous DPT groundwater sample. The wells will be properly developed. After development, an unfiltered groundwater sample will be collected from each well and analyzed for unfiltered metals. The results will be screened and evaluated as appropriate in the risk assessment in the revised RFI report.