N61165.AR.003897
CNC CHARLESTON
5090.3a

NATIONAL POLLUTANT DISCHARGE ELIMINATION SYSTEM PERMIT APPLICATION FOR DETYENS SHIPYARDS, INC. DRY DOCK 5 CNC CHARLESTON SC

4/21/2009

GENERAL ENGINEERING LABORATORIES, INC.

Meeting Today's Needs

with a

Vision for Tomorrow

National Pollutant Discharge Elimination System Permit Application For Detyens Shipyards, Inc. Drydock No. 5 Charleston Naval Shipyard Charleston, South Carolina

Scan NPDES = Compliance

GENERAL ENGINEERING LABORATORIES, INC.

DAPS
Scan Date 4-21-09
Operator al
Location Code BINDER 0826

National Pollutant Discharge Elimination System Permit Application For Detyens Shipyards, Inc. Drydock No. 5 Charleston Naval Shipyard Charleston, South Carolina

Submitted to:

South Carolina Department of Health and Environmental Control
2600 Bull Street
Columbia, South Carolina 29201

Submitted by:

General Engineering Laboratories
2040 Savage Road
Charleston, South Carolina 29414

Submittal Date: October 16,1995

National Pollutant Discharge Elimination System
Permit Application

Detyens Shipyards, Inc.
Drydock No. 5, Charleston Naval Shipyard
Charleston, South Carolina

Table of Contents

Section	Subject
Form 1	General Information
Form 2C	Process Wastewater Discharges
Form 2E	Non-Process Wastewater Discharges
Form 2F	Stormwater Discharges
Appendices	
I	Supplement to the NPDES Application
II	Sludge Disposal Supplement
Figures	
1	Vicinity Map
2	Drydock No. 5 Location Map
3	Drydock No. 5 General Plan
4	Water Flow Line Drawing
5	Water Balance Diagram
6	Site Drainage Plan

GENERAL ENGINEERING LABORATORIES
P O Box 30712 • Charleston, SC 29417 • 2040 Savage Road • 29414
(803) 556-8171 • Fax (803) 766-1178

Printed on recycled paper

Form 1

General Information

FORM 1 GENERAL

EPA

U.S. ENVIRONMENTAL PROTECTION AGENCY

GENERAL INFORMATION

Consolidated Permits Program

(Read the "General Instructions" before starting.)

I. EPA I.D. NUMBER

S F | T/A C D | 1 2 13 14 15

LABEL ITEMS

I. EPA I.D. NUMBER

III. FACILITY NAME

V. FACILITY MAILING ADDRESS

VI. FACILITY LOCATION

GENERAL INSTRUCTIONS

If a preprinted label has been provided, affix it in the designated space. Review the information carefully; if any of it is incorrect, cross through it and enter the correct data in the appropriate fill-in area below. Also, if any of the preprinted data is absent (*the area to the left of the label space lists the information that should appear*), please provide it in the proper fill-in area(s) below. If the label is complete and correct, you need not complete Items I, III, V, and VI (*except VI-B which must be completed regardless*). Complete all items if no label has been provided. Refer to the instruction for detailed item descriptions and for the legal authorizations under which data is collected.

II. POLLUTANT CHARACTERISTICS

INSTRUCTIONS: Complete A through J to determine whether you need to submit any permit application forms to the EPA. If you answer "yes" to any questions, you must submit this form and the supplemental form listed in the parenthesis following the question. Mark "X" in the box in the third column if the supplemental form is attached. If you answer "no" to each question, you need not submit any of these forms. You may answer "no" if your activity is excluded from permit requirements; see Section C of the instructions. See also, Section D of the instructions for definitions of bold-faced terms.

SPECIFIC QUESTIONS	MARK "X" YES	NO	FORM ATTACHED	SPECIFIC QUESTIONS	MARK "X" YES	NO	FORM ATTACHED
A. Is this facility a publicly owned treatment works which results in a discharge to waters of the U.S.? (FORM 2A)	16	X 17	18	B. Does or will this facility (*either existing or proposed*) include a concentrated animal feeding operation or aquatic animal production facility which results in a discharge to waters of the U.S.? (FORM 2B)	19	X 20	21
C. Is this a facility which currently results in discharges to waters of the U.S. other than those described in A or B above? (FORM 2C)	X 22	23	2C,2E 2F 24	D. Is this a proposed facility (*other than those described in A or B above*) which will result in a discharge to waters of the U.S.? (FORM 2D)	23	X 24	27
E. Does or will this facility treat, store, or dispose of hazardous wastes? (FORM 3)	28	X 29	30	F. Do you or will you inject at this facility industrial or municipal effluent below the lowermost stratum containing, within one quarter mile of the well bore, underground sources of drinking water? (FORM 4)	31	X 32	33
G. Do you or will you inject at this facility any produced water or other fluids which are brought to the surface in connection with conventional oil or natural gas production, inject fluids used for enhanced recovery or oil or natural gas, or inject fluids for storage of liquid hydrocarbons? (FORM 4)	34	X 35	36	H. Do you or will you inject at this facility fluids for special processes such as mining of sulfur by the Frasch process, solution mining of minerals, in situ combustion of fossil fuel, or recovery of geothermal energy? (FORM 4)	37	X 38	39
I. Is the facility a proposed stationary source which is one of the 28 industrial categories listed in the instructions and which will potentially emit 100 tons per year of any air pollutant regulated under the Clean Air Act and may affect or be located in an attainment area? (FORM 5)	40	X 41	42	J. Is this facility a proposed stationary source which is NOT one of the 28 industrial categories listed in the instructions and which will potentially emit 250 tons per year of any air pollutant regulated under the Clean Air Act and may affect or be located in an attainment area? (FORM 5)	43	X 44	45

III. NAME OF FACILITY

C 1 SKIP GRAVING DRYDOCK NO. 5

15 16-29 30 — 69

IV. FACILITY CONTACT

A. NAME & TITLE (*LAST, FIRST, & TITLE*) — B. PHONE (*area code & number*)

C 2 D. LOY STEWART, PRESIDENT | 803 | 884 | 2811

15 16 — 45 | 46 - 48 | 49 - 51 | 52 - 55

V. FACILITY MAILING ADDRESS

A. STREET OR P.O. BOX

C 3 DETYENS SHIPYARDS, ROUTE 2, BOX 180,

15 16 — 45

B. CITY OR TOWN	C. STATE	D. ZIP CODE
C 4 MOUNT PLEASANT	SC	29465
15 16 — 40	41 - 42	41 - 42

VI. FACILITY LOCATION

A. STREET, ROUTE NO. OR OTHER SPECIFIC IDENTIFIER

C 5 CHARLESTON NAVAL SHIPYARD

15 16 — 45

B. COUNTY NAME

CHARLESTON

46 — 70

C. CITY OR TOWN	D. STATE	E. ZIP CODE	F. COUNTY CODE (*if known*)
C 6 CHARLESTON	SC	29408	
15 16 — 40	41 - 42	41 - 42	52 - 54

CONTINUED FROM PAGE 1

VII. SIC CODES (4-digit, in order of priority)

A. FIRST	B. SECOND
373 (specify) SHIP BUILDING AND REPAIR	(specify)

C. THIRD	D. FOURTH
(specify)	(specify)

VIII. OPERATOR INFORMATION

A. NAME: DETYENS SHIPYARDS, INC.

B. Is the name listed in item VIII-A also the owner? ☐ YES ☒ NO

C. STATUS OF OPERATOR (Enter the appropriate letter into the answer box: if "Other", specify.)
F - FEDERAL M - PUBLIC (Other than federal or state)
S - STATE O - OTHER (specify)
P - PRIVATE
Answer: F (specify)

D. PHONE (area code & number): A 803 884 2811

E. STREET OR P.O. BOX: ROUTE 2, BOX 180

B. CITY OR TOWN: MOUNT PLEASANT

C. STATE: SC

D. ZIP CODE: 29465

IX. INDIAN LAND
Is the facility located on Indian lands? ☐ YES ☒ NO

X. EXISTING ENVIRONMENTAL PERMITS

A. NPDES (Discharges to Surface Water)	D. PSD (Air Emissions from Proposed Sources)
N SC0003816	P
B. UIC (Underground Injection of Fluids)	**E. OTHER (specify)**
R	(specify)
C. RCRA (Hazardous Wastes)	**E. OTHER (specify)**
R	(specify)

XI. MAP

Attach to this application a topographic map of the area extending to at least one mile beyond property boundaries. The map must show the outline of the facility; the location of each of its existing and proposed intake and discharge structures, each of its hazardous waste treatment, storage, or disposal facilities, and each well where it injects fluids underground. Include all springs, rivers, and other surface water bodies in the map areas. See instructions for precise requirements.

XII. NATURE OF BUSINESS (provide a brief description)

DETYENS WILL PERFORM CONVERSION, OVERHAUL, REPAIR, ALTERATION DRYDOCKING AND OUTFITTING ACTIVITIES ON SHIPS AND OTHER VESSELS WITHIN DRYDOCK NO. 5

XIII. CERTIFICATION (see instructions)

I certify under penalty of law that I have personally examined and am familiar with the information submitted in this application and all attachments and that based on my inquiry of those persons immediately responsible for obtaining the information contained in the application, I believe that the information is true, accurate and complete. I am aware that there are significant penalties for submitting false information, including the possibility of fine and imprisonment.

A. NAME & OFFICIAL TITLE (type or print)	B. SIGNATURE	C. DATE SIGNED
Mr. ROBERT BOWER, VICE PRESIDENT	Robert Bower	16 Oct 95

COMMENTS FOR OFFICIAL USE ONLY

* U.S. GOVERNMENT PRINTING OFFICE: 1980-323.829:6355

Form 2C

Process Wastewater Discharges

Please print or type in the unshaded areas only.

EPA I.D. NUMBER *(copy form Item 1 of Form 1)*

Form Aproved OMB No. 158-R0173

Form 2C NPDES

EPA

U.S. ENVIRONMENTAL PROTECTION AGENCY
APPLICATION FOR PERMIT TO DISCHARGE WASTEWATER
EXISTING MANUFACTURING, COMMERCIAL, MINING AND SILVICULTURAL OPERATIONS
Consolidated Permits Program

I. OUTFALL LOCATION

For each outfall, list the latitude and longitude of its location to the nearest 15 seconds and the name of the receiving water.

A. OUTFALL NUMBER *(list)*	B. LATITUDE			C. LONGITUDE			RECEIVING WATER *(name)*
	1. DEG	2. MIN	3. SEC	1. DEG	2. MIN	3. SEC	
011	32	51	42	79	57	51	Cooper River

II. Flows, Sources of Pollution, and Treatment Technologies

A. Attach a line drawing showing the water flow through the facility. Indicate sources of intake water, operations contributing wastewater to the effluent, and treatment units labeled to correspond to the more detailed descriptions in Item B. Construct a water balance on the line drawing by showing average flows between intakes, operations, treatment units, and outfalls. If a water balance cannot be determined *(e.g., for certain mining activities)*, provide a pictorial description of the nature and amount of any sources of water and any collection or treatment measures.

B. For each outfall, provide a description of: (1) All operations contributing wastewater to the effluent, including process wastewater, sanitary wastewater, cooling water, and storm water runoff; (2) The average flow contributed by each operation; and (3) The treatment received by the wastewater. Continue on additional sheets if necessary.

1. OUTFALL NO. *(LIST)*	2. OPERATION(S) CONTRIBUTING FLOW		3. TREATMENT	
	a. OPERATION *(list)*	b. AVERAGE FLOW *(include units)*	a. DESCRIPTION	b. LIST CODES FROM TABLE 2C-1
011	Drydock #5			
	Stormwater Runoff	Unknown*	None	4A, 1-T, 1-M
	Cooling Water	Unknown*	None	4A
	Caisson Leakage	Unknown*	None	4A
	Groundwater	Unknown*	None	4A
	Hydroblasting Water	Unknown	None	4A, 1-T, 1-M
	Deflooding Water	2.0 MGD*	None	4A
	* Based on flow data available from the Navy.			

OFFICIAL USE ONLY (effluent guidelines sub-categories)

CONTINUE ON PAGE 2

CONTINUED FROM THE FRONT

C. Except for storm runoff, leaks, or spills, are any of the discharges described in Items II-A or B intermittent or seasonal?

[X] YES *(complete the following table)* [ ] NO *(Go to Section III)*

1. OUTFALL NUMBER *(LIST)*	2. OPERATION *(S)* CONTRIBUTING FLOW *(LIST)*	3. FREQUENCY		4. FLOW				
		a. DAYS PER WEEK *(specify average)*	b. MONTHS PER YEAR *(specify average)*	a. FLOW RATE *(in mgd)*		b. TOTAL VOLUME *(specify with units)*		C. DURATION *(in days)*
				1. LONG TERM AVERAGE	2. MAXIMUM DAILY	1. LONG TERM AVERAGE	2. MAXIMUM DAILY	
011	Deflooding Water	Variable	Variable	ND	2.0 MGD*	ND	10 MG*	ND

* Based on data available fron the Navy

III. MAXIMUM PRODUCTION

A. Does an effluent guideline limitation promulgated by EPA under Section 304 of the Clean Water Act apply to your facility?

[ ] YES *(complete Item III-B)* [X] NO *(go to Section IV)*

B. Are the limitations in the applicable effluent guideline expressed in terms of production *(or other measure of operation)*?

[ ] YES *(complete Item III-C)* [ ] NO *(go to Section IV)*

C. If you answered "Yes" to Item III-B, list the quantity which represents an actual measurement of your maximum level of production, expressed in the terms and units used in the applicable effluent guideline, and indicate the affected outfalls.

1. MAXIMUM QUANTITY			2. AFFECTED OUTFALLS *(list outfall numbers)*
a. QUANTITY PER DAY	b. UNITS OF MEASURE	c. OPERATION, PRODUCT, MATERIAL, ETC. *(specify)*	

IV. IMPROVEMENTS

A. Are you now required by any Federal, State, or local authority to meet any implementation schedule for the construction, upgrading or operation of wastewater treatment equipment or practices or any other environmental programs which may affect the discharges described in this application? This includes, but is not limited to, permit conditions, administrative or enforcement orders, enforcement compliance schedule letters, stipulations, court orders, and grant or loan conditions.

[ ] YES *(Complete the following table)* [X] NO *(Go to Section IV-B)*

1. IDENTIFICATION OF CONDITION, AGREEMENT, ETC.	2. AFFECTED OUTFALLS		3. BRIEF DESCRIPTION OF PROJECT	4. FINAL COMPLIANCE DATE	
	a. NO.	b. SOURCE OF DISCHARGE		a. REQUIRED	b. PROJECTED

B. OPTIONAL: You may attach additional sheets describing any additional water pollution control programs *(or other environmental projects which may affect your discharges)* you now have underway or which you plan. Indicate whether each program is now underway or planned, and indicate your actual or planned schedules for construction.

[ ] MARK "X" IF DESCRIPTION OF ADDITIONAL CONTROL PROGRAMS IS ATTACHED

 CONTINUE ON PAGE 3

EPA I.D. NUMBER *(copy form Item 1 of Form 1)*

Form Approved OMB No. 158-R0173

V. INTAKE AND EFFLUENT CHARACTERISTICS

A, B, & C: See instructions before proceeding - Complete one set of tables for each outfall - Annotate the outfall number in the space provided.
NOTE: Tables V-A, V-B, and V-C are included on separate sheets numbered V-1 through V-9.

D. Use the space below to list any of the pollutants listed in Table 2c-3 of the instructions, which you know or have reason to believe is discharged or may be discharged from any outfall. For every pollutant you list, briefly describe the reasons you believe it to be present and report any analytical data in your possession.

1. POLLUTANT	2. SOURCE	1. POLLUTANT	2. SOURCE
Xylene	Xylene is a component of some paints that may be used in the drydock.		

VI. POTENTIAL DISCHARGES NOT COVERED BY ANALYSIS

A. Is any pollutant listed in Item V-C a substance or a component of a substance which you do or expect that you will over the next 5 years use or manufacture as an intermediate or final product or byproduct?

[X] YES *(list all such pollutants below)* [ ] NO *(Go to Item VI-B)*

Some of the pollutants listed in Item V-C could potentially be discharged from a ship repair operation; however, many of these pollutants are not presently on the Navy's NPDES permit for the drydock. If necessary, analytical data on other pollutants could be collected if required by DHEC.

B. Are your operations such that your raw materials, processes, or products can reasonably be expected to vary so that your discharges of pollutants may during the next 5 years exceed two times the maximum values reported in Item V?

[ ] YES *(list all such pollutants below)* [X] NO *(Go to Item VI-B)*

C. If you answered "Yes" to Item VI-B, explain below and describe in detail the sources and expected levels of such pollutants which you anticipate will be discharged from each outfall over the next 5 years, to the best of your ability at this time. Continue on additional sheets if you need more space.

CONTINUE ON PAGE 4

CONTINUED FROM PAGE 3

VII. BIOLOGICAL TOXICITY TESTING DATA

Do you have any knowledge or reason to believe that any biological test for acute or chronic toxicity has been made on any of your discharges or on a receiving water in relation to your discharge within the last 3 years?

☐ YES *(identify the test(s) and describe their purposes below)* ☒ NO *(Go to Item VIII)*

It appears that the Navy has no toxicity testing data for this outfall.

VIII. Contract Analysis Information

Were any of the analyses reported in Item V performed by a contract laboratory or consulting firm?

☒ YES *(list the name, address, and telephone number of, and pollutants analyzed by each such laboratory or firm below)* ☐ NO *(Go to Section IX)*

A. NAME	B. ADDRESS	C. TELEPHONE *(area code & no.)*	D. POLLUTANTS ANALYZED *(list)*
General Engineering Laboratories, Inc.	P. O. Box 30712 Charleston, South Carolina 29417	(803) 556-8171	It appears that th Navy used General Engineering Laboratories, Inc. to perform most of the analyses on this form.

IX. CERTIFICATION

I certify under penalty of law that I have personally examined and am familiar with the information submitted in this application and all attachments and that, based on my inquiry of those individuals immediately responsible for obtaining the information, I believe that the information is true, accurate and complete. I am aware that there are significant penalties for submitting false information, including the possibility of fine and imprisonment.

A. NAME & OFFICIAL TITLE *(type or print)*	B. PHONE NO. *(area code & no.)*
Mr. Robert Bower, Vice President	(803) 884-2811
C. SIGNATURE Robert Bower	D. DATE SIGNED 16 Oct 95

PLEASE PRINT OR TYPE IN THE UNSHADED AREAS ONLY. Y u may report s m r all of this information on separate sheets *(use the same format)* instead of compl ting thes pag s.
SEE INSTRUCTIONS

EPA I.D. NUMBER *(copy from Item 1 Form 1)*

Form Approved OMB No. 158-R0173

IV. INTAKE AND EFFLUENT CHARACTERISTICS *(continued from page 3 of Form 2-C)*

OUTFALL NO. 011

PART A - You must provid th results of at l ast one analysis for ev ry pollutant in this table. Complete one for each utfall. See instructions for additi nal details.

1. POLLUTANT	2.EFFLUENT a. MAXIMUM DAILY VALUE (1) Concentration	(2) Mass	b. MAXIMUM 30 DAY VALUE *(if available)* (1) Concentration	(2) Mass	c. LONG TERM AVRG. VALUE *(if available)* (1) Concentration	(2) Mass	d. NO. OF ANALYSES	3. UNITS *(specify if blank)* a. CONCEN-TRATION	b. MASS	4. INTAKE *(optional)* a. LONG TERM AVERAGE VALUE (1) Concentration	(2) Mass	b. NO. OF ANALYSES
a. Biochemical Oxygen Demand (BOD)	19.0	NA	NA	NA	NA	NA	4	mg/l	NA	NA	NA	NA
b. Chemical Oxygen Demand (COD)	632	NA	NA	NA	NA	NA	4	mg/l	NA	NA	NA	NA
c. Total Organic Carbon (TOC)	8	NA	NA	NA	NA	NA	3	mg/l	NA	NA	NA	NA
d. Total Suspended Solids (TSS)	160	NA	NA	NA	NA	NA	4	mg/l	NA	NA	NA	NA
e. Ammonia (as N)	0.250	NA	NA	NA	NA	NA	2	mg/l	NA	NA	NA	NA
f. Flow	VALUE NA		VALUE NA		VALUE NA		NA	NA	NA	VALUE NA		NA
g. Temperature *(winter)*	VALUE NA		VALUE NA		VALUE NA		NA	°C		VALUE NA		NA
h. Temperature *(summer)*	VALUE NA		VALUE NA		VALUE NA		NA	°C		VALUE NA		NA
i. pH	MINIMUM 7.63	MAXIMUM 7.96	MINIMUM NA	MAXIMUM NA			2	STANDARD UNITS				

PART B - Mark "X" in column 2-a for each pollutant you know or have reason to believe is present. Mark "X" in column 2-b for each pollutant you believe to be absent. If you mark column 2-a for any pollutant, you must provide the results of at least one analysis for that pollutant. Complete one table for each outfall. See the instructions for additional details and requirements.

1. POLLUTANT AND CAS NO. *(if available)*	2. MARK "X" a. BELIEVED PRESENT	b. BELIEVED ABSENT	3.EFFLUENT a. MAXIMUM DAILY VALUE (1) Concentration	(2) Mass	b. MAXIMUM 30 DAY VALUE *(if available)* (1) Concentration	(2) Mass	c. LONG TERM AVRG. VALUE *(if available)* (1) Concentration	(2) Mass	d. NO. OF ANALYSES	4. UNITS a. CONCEN-TRATION	b. MASS	4. INTAKE *(optional)* a. LONG TERM AVERAGE VALUE (1) Concentration	(2) Mass	b. NO. OF ANALYSES
a. Bromide (24959-67-9)		X	NA	NA	NA	NA	NA	NA	NA	NA	NA	NA	NA	NA
b. Total Residual Chlorine		X	NA	NA	NA	NA	NA	NA	NA	NA	NA	NA	NA	NA
c. Color		X	NA	NA	NA	NA	NA	NA	NA	NA	NA	NA	NA	NA
d. Fecal Coliform		X	NA	NA	NA	NA	NA	NA	NA	NA	NA	NA	NA	NA
e. Fluoride (16984-48-8)		X	NA	NA	NA	NA	NA	NA	NA	NA	NA	NA	NA	NA
f. Nitrate - Nitrite (as N)		X	NA	NA	NA	NA	NA	NA	NA	NA	NA	NA	NA	NA

NA - NO DATA AVAILABLE FROM THE NAVY

CONTINUE ON PAGE IV-2

CONTINUED FROM IV-1

1. POLLUTANT AND CAS NO. (If available)	2. MARK "X"		3.EFFLUENT							4. UNITS		4. INTAKE (optional)		
	a. BELIEVED PRESENT	b. BELIEVED ABSENT	a. MAXIMUM DAILY VALUE		b. MAXIMUM 30 DAY VALUE (If available)		c. Long Term Avrg. Value (If available)		d. NO. OF ANALYSES	a. CONCEN-TRATION	b. MASS	a. LONG TERM AVERAGE VALUE		b. NO. OF ANALYSES
			(1) Concentration	(2) Mass	(1) Concentration	(2) Mass	(1) Concentration	(2) Mass				(1) Concentration	(2) Mass	
g. Nitrogen, Total Organic (as N)		X	NA	NA	NA	NA	NA	NA	NA	NA	NA	NA	NA	NA
h. Oil & Grease	X		29.0	NA	NA	NA	NA	NA	4	mg/l	NA	NA	NA	NA
i. Phosphorus (as P), Total (7723-14-0)		X	NA	NA	NA	NA	NA	NA	NA	NA	NA	NA	NA	NA
j. Radioactivity														
(1) Alpha, Total		X	NA	NA	NA	NA	NA	NA	NA	NA	NA	NA	NA	NA
(2) Beta, Total		X	NA	NA	NA	NA	NA	NA	NA	NA	NA	NA	NA	NA
(3) Radium, Total		X	NA	NA	NA	NA	NA	NA	NA	NA	NA	NA	NA	NA
(4) Radium 226, Total		X	NA	NA	NA	NA	NA	NA	NA	NA	NA	NA	NA	NA
k. Sulfate (as SO4) (14808-79-8)		X	NA	NA	NA	NA	NA	NA	NA	NA	NA	NA	NA	NA
l. Sulfide (as S)		X	NA	NA	NA	NA	NA	NA	NA	NA	NA	NA	NA	NA
m. Sulfite (as S03) (14265-45-3)		X	NA	NA	NA	NA	NA	NA	NA	NA	NA	NA	NA	NA
n. Surfactants		X	NA	NA	NA	NA	NA	NA	NA	NA	NA	NA	NA	NA
o. Aluminum, Total (7429-90-5)		X	NA	NA	NA	NA	NA	NA	NA	NA	NA	NA	NA	NA
p. Barium, Total (7440-39-3)		X	NA	NA	NA	NA	NA	NA	NA	NA	NA	NA	NA	NA
q. Boron, Total (7440-42-8)		X	NA	NA	NA	NA	NA	NA	NA	NA	NA	NA	NA	NA
r. Cobalt, Total (7440-48-4)		X	NA	NA	NA	NA	NA	NA	NA	NA	NA	NA	NA	NA
s. Iron, Total (7439-89-6)		X	NA	NA	NA	NA	NA	NA	NA	NA	NA	NA	NA	NA
t. Magnesium, Total (7439-95-4)		X	NA	NA	NA	NA	NA	NA	NA	NA	NA	NA	NA	NA
u. Molybdenum, Total (7439-98-7)		X	NA	NA	NA	NA	NA	NA	NA	NA	NA	NA	NA	NA
v. Manganese, Total (7439-96-5)		X	NA	NA	NA	NA	NA	NA	NA	NA	NA	NA	NA	NA
w. Tin, Total (7440-31-5)		X	NA	NA	NA	NA	NA	NA	NA	NA	NA	NA	NA	NA
x. Titanium, Total (7440-32-6)		X	NA	NA	NA	NA	NA	NA	NA	NA	NA	NA	NA	NA

NA - NO DATA AVAILABLE FROM THE NAVY

CONTINUE ON PAGE IV-3

EPA I.D. NUMBER (*copy from Item 1 of Form 1*)	OUTFALL NUMBER
	011

CONTINUED FROM PAGE 2 OF FORM 2-E

PART C - If you are a primary industry and this outfall contains process wastewater, refer to Table 2c-2 in th instructions to determin which of th GC/MS fractions you must test for. Mark "X" in column 2-a for all such GC/MS fractions that apply to your industry and for ALL toxic metals, cyanides, and total phenols. If you ar not required to mark column 2-a (*secondary industries, non-process wastewater outfalls, and non-required GC/MS fractions*), mark "X" in column 2-b for each pollutant you know or hav reason to believe is present. Mark "X" in column 2-c for each pollutant you believe to be absent. If you mark either columns 2-a or 2-b for any pollutant, you must provide the results for at least one analysis for that pollutant. Note that there are seven pages to this part; please review each carefully. Complete one table (all sev n pages) for each outfall. See instructions for additional details and requirements.

1. POLLUTANT AND CAS NO. (*if available*)	2. MARK "X"			3. EFFLUENT							4. UNITS		4. INTAKE (*optional*)		
	a. TESTING REQUIRED	b. BELIEVED PRESENT	c. BELIEVED ABSENT	a. MAXIMUM DAILY VALUE		b. MAXIMUM 30 DAY VALUE (*if available*)		c. LONG TERM AVRG. VALUE (if available)		d. NO. OF ANALYSES	a. CONCEN-TRATION	b. MASS	a. LONG TERM AVERAGE VALUE		b. NO. OF ANALYSES
				(1) Concentration	(2) Mass	(1) Concentration	(2) Mass	(1) Concentration	(2) Mass				(1) Concentration	(2) Mass	
METALS, CYANIDE, AND TOTAL PHENOLS															
1M. Antimony, Total (7440-36-0)			X	NA	NA	NA	NA	NA	NA	NA	NA	NA	NA	NA	NA
2M. Arsenic, Total (7440-38-2)			X	NA	NA	NA	NA	NA	NA	NA	NA	NA	NA	NA	NA
3M. Beryllium, Total (7440-41-7)			X	NA	NA	NA	NA	NA	NA	NA	NA	NA	NA	NA	NA
4M. Cadmium, Total (7440-43-9)			X	NA	NA	NA	NA	NA	NA	NA	NA	NA	NA	NA	NA
5M. Chromium, Total (7550-50-8)			X	NA	NA	NA	NA	NA	NA	NA	NA	NA	NA	NA	NA
6M. Copper, Total (7550-50-8)			X	NA	NA	NA	NA	NA	NA	NA	NA	NA	NA	NA	NA
7M. Lead, Total (7439-97-6)			X	NA	NA	NA	NA	NA	NA	NA	NA	NA	NA	NA	NA
8M. Mercury, Total (7439-97-6)			X	NA	NA	NA	NA	NA	NA	NA	NA	NA	NA	NA	NA
9M. Nickel, Total (7440-02-0)			X	NA	NA	NA	NA	NA	NA	NA	NA	NA	NA	NA	NA
10M. Selenium, Total (7782-49-2)			X	NA	NA	NA	NA	NA	NA	NA	NA	NA	NA	NA	NA
11M. Silver, Total (7440-22-4)			X	NA	NA	NA	NA	NA	NA	NA	NA	NA	NA	NA	NA
12M. Thallium, Total (7440-28-0)			X	NA	NA	NA	NA	NA	NA	NA	NA	NA	NA	NA	NA
13M. Zinc, Total (7440-66-6)			X	NA	NA	NA	NA	NA	NA	NA	NA	NA	NA	NA	NA
14M. Cyanide Total (57-1-5)			X	NA	NA	NA	NA	NA	NA	NA	NA	NA	NA	NA	NA
15M. Phenols, Total			X	NA	NA	NA	NA	NA	NA	NA	NA	NA	NA	NA	NA
DIOXIN															
2,3,7,8 - Tetrachloro-dibenzo-P- Dioxin (1764-01-6)			X	NA	NA	NA	NA	NA	NA	NA	NA	NA	NA	NA	NA

NA- NO DATA AVAILABLE FROM THE NAVY

CONTINUE ON PAGE IV-4

CONTINUED FROM PAGE IV-3

1. POLLUTANT AND CAS NO. *(if available)*	2. MARK "X"			3.EFFLUENT							4. UNITS		4. INTAKE *(optional)*		
	a. TESTING REQUIRED	b. BELIEVED PRESENT	c. BELIEVED ABSENT	a. MAXIMUM DAILY VALUE		B. MAXIMUM 30 DAY VALUE *(if available)*		c. LONG TERM AVRG. VALUE *(if available)*		d. NO. OF ANALYSES	a. CONCEN-TRATION	b. MASS	a. LONG TERM AVERAGE VALUE		b. NO. OF ANALYSES
				(1) Concentration	(2) Mass	(1) Concentration	(2) Mass	(1) Concentration	(2) Mass				(1) Concentration	(2) Mass	
GC/MS FRACTION - VOLATILE COMPOUNDS															
1V. Acrolein (107-02-8)			X	NA	NA	NA	NA	NA	NA	NA	NA	NA	NA	NA	NA
2V. Acrylonitrile (107-13-1)			X	NA	NA	NA	NA	NA	NA	NA	NA	NA	NA	NA	NA
3V. Benzene (71-43-2)			X	NA	NA	NA	NA	NA	NA	NA	NA	NA	NA	NA	NA
4V. Bis (Chloromethyl) Ether (542-88-1)	TESTING AND REPORTING NOT REQUIRED														
5V. Bromoform (75-25-2)			X	NA	NA	NA	NA	NA	NA	NA	NA	NA	NA	NA	NA
6V. Carbon Tetra-chloride (56-23-5)			X	NA	NA	NA	NA	NA	NA	NA	NA	NA	NA	NA	NA
7V. Chlorobenzene (108-90-7)			X	NA	NA	NA	NA	NA	NA	NA	NA	NA	NA	NA	NA
8V. Chlorodibromo-methane (124-48-1)			X	NA	NA	NA	NA	NA	NA	NA	NA	NA	NA	NA	NA
9V. Chloroethane (75-00-3)			X	NA	NA	NA	NA	NA	NA	NA	NA	NA	NA	NA	NA
10V. 2-Chloroethylvinyl Ether (110-75-8)			X	NA	NA	NA	NA	NA	NA	NA	NA	NA	NA	NA	NA
11V. Chloroform (67-66-3)			X	NA	NA	NA	NA	NA	NA	NA	NA	NA	NA	NA	NA
12V. Dichlorobromo-methane (75-27-4)			X	NA	NA	NA	NA	NA	NA	NA	NA	NA	NA	NA	NA
13V. Dichlorodifluoro-methane (75-71-8)	TESTING AND REPORTING NOT REQUIRED														
14V. 1,1-Dichloroethane (75-34-3)			X	NA	NA	NA	NA	NA	NA	NA	NA	NA	NA	NA	NA
15V. 1,2-Dichloroethane (107-06-2)			X	NA	NA	NA	NA	NA	NA	NA	NA	NA	NA	NA	NA
16V. 1,1-Dichloro-ethylene (75-35-4)			X	NA	NA	NA	NA	NA	NA	NA	NA	NA	NA	NA	NA
17V. 1,2-Dichloro-propane (78-87-5)			X	NA	NA	NA	NA	NA	NA	NA	NA	NA	NA	NA	NA
18V. 1,2-Dichloroprop-ylene (542-75-6)			X	NA	NA	NA	NA	NA	NA	NA	NA	NA	NA	NA	NA
19V. Ethylbenzene (100-41-4)			X	NA	NA	NA	NA	NA	NA	NA	NA	NA	NA	NA	NA
20V. Methyl Bromide (74-83-9)			X	NA	NA	NA	NA	NA	NA	NA	NA	NA	NA	NA	NA
21V. Methyl Chloride (74-87-3)			X	NA	NA	NA	NA	NA	NA	NA	NA	NA	NA	NA	NA

NA - NO DATA AVAILABLE FROM THE NAVY

CONTINUE ON PAGE IV-5

EPA I.D. NUMBER (*copy from Item 1 of Form 1*)	OUTFALL NUMBER
	011

CONTINUED FROM PAGE IV-5

1. POLLUTANT AND CAS NO. (*If available*)	2. MARK "X"			3.EFFLUENT							4. UNITS		4. INTAKE (*optional*)		
	a. TESTING REQUIRED	b. BELIEVED PRESENT	c. BELIEVED ABSENT	a. MAXIMUM DAILY VALUE		b. MAXIMUM 30 DAY VALUE (*If available*)		c. LONG TERM AVRG. VALUE (*If available*)		d. NO. OF ANALYSES	a. CONCEN-TRATION	b. MASS	a. LONG TERM AVERAGE VALUE		b. NO. OF ANALYSES
				(1) Concentration	(2) Mass	(1) Concentration	(2) Mass	(1) Concentration	(2) Mass				(1) Concentration	(2) Mass	
GC/MS FRACTION - VOLATILE COMPOUNDS (continued)															
22V. Methylene Chloride (75-09-2)			X	NA	NA	NA	NA	NA	NA	NA	NA	NA	NA	NA	NA
23V. 1,1,2,2-Tetrachloro-ethane (79-34-5)			X	NA	NA	NA	NA	NA	NA	NA	NA	NA	NA	NA	NA
24V. Tetrachloroethy-lene (127-18-4)			X	NA	NA	NA	NA	NA	NA	NA	NA	NA	NA	NA	NA
25V. Toluene (108-88-3)			X	NA	NA	NA	NA	NA	NA	NA	NA	NA	NA	NA	NA
26V. 1,2-Trans-Dichloro-ethylene (156-60-5)			X	NA	NA	NA	NA	NA	NA	NA	NA	NA	NA	NA	NA
27V. 1,1,1-Trichloro-ethane(71-55-6)			X	NA	NA	NA	NA	NA	NA	NA	NA	NA	NA	NA	NA
28V. 1,1,2-Trichloro-ethane (79-00-5)			X	NA	NA	NA	NA	NA	NA	NA	NA	NA	NA	NA	NA
29V. Trichloroethylene (79-01-6)			X	NA	NA	NA	NA	NA	NA	NA	NA	NA	NA	NA	NA
30V. Trichlorofluoro-methane (75-69-4)			X	NA	NA	NA	NA	NA	NA	NA	NA	NA	NA	NA	NA
31V. Vinyl Chloride (75-01-4)			X	NA	NA	NA	NA	NA	NA	NA	NA	NA	NA	NA	NA
GC/MS FRACTION - ACID COMPOUNDS															
1A. 2-Chlorophenol (95-57-8)			X	NA	NA	NA	NA	NA	NA	NA	NA	NA	NA	NA	NA
2A. 2,4-Dichlorophenol (120-83-2)			X	NA	NA	NA	NA	NA	NA	NA	NA	NA	NA	NA	NA
3A. 2,4-Dimethylphenol (105-67-9)			X	NA	NA	NA	NA	NA	NA	NA	NA	NA	NA	NA	NA
4A. 4,6-Dinitro-O-Cresol (534-52-1)			X	NA	NA	NA	NA	NA	NA	NA	NA	NA	NA	NA	NA
5A. 2,4-Dinitrophenol (51-28-5)			X	NA	NA	NA	NA	NA	NA	NA	NA	NA	NA	NA	NA
6A. 2-Nitrophenol (88-75-5)			X	NA	NA	NA	NA	NA	NA	NA	NA	NA	NA	NA	NA
7A. 4-Nitrophenol (88-75-5)			X	NA	NA	NA	NA	NA	NA	NA	NA	NA	NA	NA	NA
8A. P-Chloro-M-Cresol (59-50-7)			X	NA	NA	NA	NA	NA	NA	NA	NA	NA	NA	NA	NA
9A. Pentachlorophenol (87-86-5)			X	NA	NA	NA	NA	NA	NA	NA	NA	NA	NA	NA	NA
10A. Phenol (108-95-2)			X	NA	NA	NA	NA	NA	NA	NA	NA	NA	NA	NA	NA
11A. 2,4,6-Trichloro-phenol (88-06-2)			X	NA	NA	NA	NA	NA	NA	NA	NA	NA	NA	NA	NA

NA - NO DATA AVAILABLE FROM THE NAVY

CONTINUE ON PAGE IV-6

CONTINUED FROM PAGE IV-5

1. POLLUTANT AND CAS NO. (if available)	2. MARK "X"			3.EFFLUENT							4. UNITS		4. INTAKE (optional)		
	a. TESTING REQUIRED	b. BELIEVED PRESENT	c. BELIEVED ABSENT	a. MAXIMUM DAILY VALUE		b. MAXIMUM 30 DAY VALUE (if available)		c. LONG TERM AVRG. VALUE (if available)		d. NO. OF ANALYSES	a. CONCEN-TRATION	b. MASS	a. LONG TERM AVERAGE VALUE		b. NO. OF ANALYSES
				(1) Concentration	(2) Mass	(1) Concentration	(2) Mass	(1) Concentration	(2) Mass				(1) Concentration	(2) Mass	
GC/MS FRACTION - BASE / NEUTRAL COMPOUNDS															
1B. Acenaphthene (83-32-9)			X	NA	NA	NA	NA	NA	NA	NA	NA	NA	NA	NA	NA
2B. Acenaphtylene (208-96-8)			X	NA	NA	NA	NA	NA	NA	NA	NA	NA	NA	NA	NA
3B. Anthracene (120-12-7)			X	NA	NA	NA	NA	NA	NA	NA	NA	NA	NA	NA	NA
4B. Benzidine (92-87-5)			X	NA	NA	NA	NA	NA	NA	NA	NA	NA	NA	NA	NA
5B. Benzo (*a*) Anthracene (56-55-3)			X	NA	NA	NA	NA	NA	NA	NA	NA	NA	NA	NA	NA
6B. Benzo (*a*) Pyrene (50-32-8)			X	NA	NA	NA	NA	NA	NA	NA	NA	NA	NA	NA	NA
7B. 3,4-Benzofluor-anthene (205-99-2)			X	NA	NA	NA	NA	NA	NA	NA	NA	NA	NA	NA	NA
8B. Benzo (*ghi*) Perylene (191-24-2)			X	NA	NA	NA	NA	NA	NA	NA	NA	NA	NA	NA	NA
9B. Benzo (*k*) Fluoranthene (207-08-9)			X	NA	NA	NA	NA	NA	NA	NA	NA	NA	NA	NA	NA
10B. Bis (*2-Chloroethoxy*) Methane (111-91-1)			X	NA	NA	NA	NA	NA	NA	NA	NA	NA	NA	NA	NA
11B. Bis (*2-Chloroethyl*) Ether (111-44-4)			X	NA	NA	NA	NA	NA	NA	NA	NA	NA	NA	NA	NA
12B. Bis- (*2-Chloroisopropyl*) Ether (39638-35-9)			X	NA	NA	NA	NA	NA	NA	NA	NA	NA	NA	NA	NA
13B. Bis (*2-Ethylhexyl*) Phthalate (117-81-7)			X	NA	NA	NA	NA	NA	NA	NA	NA	NA	NA	NA	NA
14B. 4-Bromophenyl Phenyl Ether (101-55-3)			X	NA	NA	NA	NA	NA	NA	NA	NA	NA	NA	NA	NA
15B. Butyl Benzyl Phthalate (85-68-7)			X	NA	NA	NA	NA	NA	NA	NA	NA	NA	NA	NA	NA
16B. 2-Chloronaphthalene (91-58-7)			X	NA	NA	NA	NA	NA	NA	NA	NA	NA	NA	NA	NA
17B. 4-Chlorophenyl Phenyl Ether (7005-72-3)			X	NA	NA	NA	NA	NA	NA	NA	NA	NA	NA	NA	NA
18B. Chrysene (218-01-9)			X	NA	NA	NA	NA	NA	NA	NA	NA	NA	NA	NA	NA
19B. Dibenzo (*a,h*) Anth-racene (53-01-9)			X	NA	NA	NA	NA	NA	NA	NA	NA	NA	NA	NA	NA
20B. 1,2- Dichloro-benzene (95-50-1)			X	NA	NA	NA	NA	NA	NA	NA	NA	NA	NA	NA	NA
21B. 1,3-Dichloro-benzene (541-73-1)			X	NA	NA	NA	NA	NA	NA	NA	NA	NA	NA	NA	NA

NA- - NO DATA AVAILABLE FROM THE NAVY

CONTINUE ON PAGE IV-7

CONTINUED FROM PAGE IV-6

EPA I.D. NUMBER (*copy from Item 1 of Form 1*) | OUTFALL NUMBER 011

1. POLLUTANT AND CAS NO. (*if available*)	2. MARK "X"			3. EFFLUENT							4. UNITS		4. INTAKE (*optional*)		
	a. TESTING REQUIRED	b. BELIEVED PRESENT	c. BELIEVED ABSENT	a. MAXIMUM DAILY VALUE		b. MAXIMUM 30 DAY VALUE (*if available*)		c. LONG TERM AVRG. VALUE (*if available*)		d. NO. OF ANALYSES	a. CONCEN-TRATION	b. MASS	a. LONG TERM AVERAGE VALUE		b. NO. OF ANALYSES
				(1) Concentration	(2) Mass	(1) Concentration	(2) Mass	(1) Concentration	(2) Mass				(1) Concentration	(2) Mass	
GC/MS FRACTION - BASE / NEUTRAL COMPOUNDS (*continued*)															
22B. 1,4-Dichlorobenzene (106-46-7)			X	NA	NA	NA	NA	NA	NA	NA	NA	NA	NA	NA	NA
23B. 3,3'-Dichlorobenzidine (91-94-1)			X	NA	NA	NA	NA	NA	NA	NA	NA	NA	NA	NA	NA
24B. Diethyl Phthalate (84-66-2)			X	NA	NA	NA	NA	NA	NA	NA	NA	NA	NA	NA	NA
25B. Dimethyl Phthalate (131-11-3)			X	NA	NA	NA	NA	NA	NA	NA	NA	NA	NA	NA	NA
26B. Di-N-Butyl Phthalate (84-74-2)			X	NA	NA	NA	NA	NA	NA	NA	NA	NA	NA	NA	NA
27B. 2,4-Dinitrotoluene (121-14-2)			X	NA	NA	NA	NA	NA	NA	NA	NA	NA	NA	NA	NA
28B. 2,6-Dinitrotoluene (606-20-2)			X	NA	NA	NA	NA	NA	NA	NA	NA	NA	NA	NA	NA
29B. Di-N-Octyl Phthalate (117-84-0)			X	NA	NA	NA	NA	NA	NA	NA	NA	NA	NA	NA	NA
30B. 1,2-Diphenylhydrazine (*as Azobenzene*) (122-66-7)			X	NA	NA	NA	NA	NA	NA	NA	NA	NA	NA	NA	NA
31B. Fluoranthene (206-44-0)			X	NA	NA	NA	NA	NA	NA	NA	NA	NA	NA	NA	NA
32B. Fluorene (86-73-7)			X	NA	NA	NA	NA	NA	NA	NA	NA	NA	NA	NA	NA
33B. Hexachlorobenzene (118-71-1)			X	NA	NA	NA	NA	NA	NA	NA	NA	NA	NA	NA	NA
34B. Hexachlorobutadiene (87-68-3)			X	NA	NA	NA	NA	NA	NA	NA	NA	NA	NA	NA	NA
35B. Hexachlorocyclopent-adiene (77-47-4)			X	NA	NA	NA	NA	NA	NA	NA	NA	NA	NA	NA	NA
36B. Hexachloroethane (67-72-1)			X	NA	NA	NA	NA	NA	NA	NA	NA	NA	NA	NA	NA
37B. Indeno (*1,2,3-cd*) Pyrene (193-39-5)			X	NA	NA	NA	NA	NA	NA	NA	NA	NA	NA	NA	NA
38B. Isophorone (78-59-1)			X	NA	NA	NA	NA	NA	NA	NA	NA	NA	NA	NA	NA
39B. Naphthalene (91-20-3)			X	NA	NA	NA	NA	NA	NA	NA	NA	NA	NA	NA	NA
40B. Nitrobenzene (98-95-3)			X	NA	NA	NA	NA	NA	NA	NA	NA	NA	NA	NA	NA
41B. N-Nitrosodimethylamine (62-75-9)			X	NA	NA	NA	NA	NA	NA	NA	NA	NA	NA	NA	NA
42B. N-Nitrosodi-N-Propyl-amine (621-64-7)			X	NA	NA	NA	NA	NA	NA	NA	NA	NA	NA	NA	NA

NA - NO DATA AVAILABLE FROM THE NAVY

CONTINUE ON PAGE IV-8

CONTINUED FROM PAGE IV-7

1. POLLUTANT AND CAS NO. (if available)	2. MARK "X"			3.EFFLUENT							4. UNITS		4. INTAKE (optional)		
	a. TESTING REQUIRED	b. BELIEVED PRESENT	c. BELIEVED ABSENT	a. MAXIMUM DAILY VALUE		b. MAXIMUM 30 DAY VALUE (if available)		c. LONG TERM AVRG. VALUE (if available)		d. NO. OF ANALYSES	a. CONCEN-TRATION	b. MASS	a. LONG TERM AVERAGE VALUE		b. NO. OF ANALYSES
				(1) Concentration	(2) Mass	(1) Concentration	(2) Mass	(1) Concentration	(2) Mass				(1) Concentration	(2) Mass	
GC/MS FRACTION - BASE / NEUTRAL COMPOUNDS (continued)															
43B. N-Nitrosodiphenyl-amine (86-30-6)			X	NA	NA	NA	NA	NA	NA	NA	NA	NA	NA	NA	NA
44B. Phenanthrene (85-01-8)			X	NA	NA	NA	NA	NA	NA	NA	NA	NA	NA	NA	NA
45B. Pyrene (129-00-0)			X	NA	NA	NA	NA	NA	NA	NA	NA	NA	NA	NA	NA
46B. 1,2,4-Trichloro-benzene (120-82-1)			X	NA	NA	NA	NA	NA	NA	NA	NA	NA	NA	NA	NA
GC/MS FRACTION - PESTICIDES															
1P. Aldrin (309-00-2)			X	NA	NA	NA	NA	NA	NA	NA	NA	NA	NA	NA	NA
2P. A-BHC (319-84-6)			X	NA	NA	NA	NA	NA	NA	NA	NA	NA	NA	NA	NA
3P. B-BHC (319-85-7)			X	NA	NA	NA	NA	NA	NA	NA	NA	NA	NA	NA	NA
4P. Y-BHC (58-89-9)			X	NA	NA	NA	NA	NA	NA	NA	NA	NA	NA	NA	NA
5P. D-BHC (319-86-8)			X	NA	NA	NA	NA	NA	NA	NA	NA	NA	NA	NA	NA
6 P. Chlordane (57-74-9)			X	NA	NA	NA	NA	NA	NA	NA	NA	NA	NA	NA	NA
7P. 4,4'-DDT (50-29-3)			X	NA	NA	NA	NA	NA	NA	NA	NA	NA	NA	NA	NA
8P. 4,4'-DDE (72-55-9)			X	NA	NA	NA	NA	NA	NA	NA	NA	NA	NA	NA	NA
9P. 4,4'-DDD (72-54-8)			X	NA	NA	NA	NA	NA	NA	NA	NA	NA	NA	NA	NA
10P. Dieldrin (60-57-1)			X	NA	NA	NA	NA	NA	NA	NA	NA	NA	NA	NA	NA
11P. A-Endosulfan (115-29-7)			X	NA	NA	NA	NA	NA	NA	NA	NA	NA	NA	NA	NA
12P. B-Endosulfan (115-29-7)			X	NA	NA	NA	NA	NA	NA	NA	NA	NA	NA	NA	NA
13P. Endosulfan Sulfate (1031-07-8)			X	NA	NA	NA	NA	NA	NA	NA	NA	NA	NA	NA	NA
14P. Endrin (1031-07-8)			X	NA	NA	NA	NA	NA	NA	NA	NA	NA	NA	NA	NA
15P. Endrin Aldehyde (7421-93-4)			X	NA	NA	NA	NA	NA	NA	NA	NA	NA	NA	NA	NA
16P. Heptachlor (76-44-8)			X	NA	NA	NA	NA	NA	NA	NA	NA	NA	NA	NA	NA

NA- NO DATA AVAILABLE FROM THE NAVY

CONTINUE ON PAGE IV-9

EPA I.D. NUMBER (*copy from Item 1 of Form 1*)	OUTFALL NUMBER
	011

CONTINUED FROM PAGE IV-8

1. POLLUTANT AND CAS NO. (*if available*)	2. MARK "X"			3.EFFLUENT							4. UNITS		4. INTAKE (*optional*)		
	a. TESTING REQUIRED	b. BELIEVED PRESENT	c. BELIEVED ABSENT	a. MAXIMUM DAILY VALUE		b. MAXIMUM 30 DAY VALUE (*if available*)		c. LONG TERM AVRG. VALUE (*if available*)		d. NO. OF ANALYSES	a. CONCEN-TRATION	b. MASS	a. LONG TERM AVERAGE VALUE		b. NO. OF ANALYSES
				(1) Concentration	(2) Mass	(1) Concentration	(2) Mass	(1) Concentration	(2) Mass				(1) Concentration	(2) Mass	
GC/MS FRACTION - PESTICIDES (*continued*)															
17P. Heptachlor Epoxide (1024-57-3)			X	NA	NA	NA	NA	NA	NA	NA	NA	NA	NA	NA	NA
18P. PCB-1242 (53469-21-9)			X	NA	NA	NA	NA	NA	NA	NA	NA	NA	NA	NA	NA
19P. PCB-1254 (11097-69-1)			X	NA	NA	NA	NA	NA	NA	NA	NA	NA	NA	NA	NA
20P. PCB-1221 (11104-28-2)			X	NA	NA	NA	NA	NA	NA	NA	NA	NA	NA	NA	NA
21P. PCB-1232 (11141-16-5)			X	NA	NA	NA	NA	NA	NA	NA	NA	NA	NA	NA	NA
22P. PCB-1248 (12672-29-6)			X	NA	NA	NA	NA	NA	NA	NA	NA	NA	NA	NA	NA
23P. PCB-1260 (11096-82-5)			X	NA	NA	NA	NA	NA	NA	NA	NA	NA	NA	NA	NA
24P. PCB-1016 (12674-11-2)			X	NA	NA	NA	NA	NA	NA	NA	NA	NA	NA	NA	NA
25P. Toxaphene (8001-35-2)			X	NA	NA	NA	NA	NA	NA	NA	NA	NA	NA	NA	NA

NA - NO DATA AVAILABLE FROM THE NAVY

Form 2E

Non-Process Wastewater Discharges

Please type or print in the unshaded areas only	EPA ID Number *(copy from Item 1 of Form 1)*	Form Approved OMB No. 2040-0086 Approval expires 7-31-88

Form 2E NPDES

EPA Faciliti s Which Do Not Discharg Proc ss Wa tewater

I. Receiving Waters

For this outfall, list the latitude and longitude, and name of the receiving water(s).

Outfall Number *(list)*	Latitude Deg	Latitude Min	Latitude Sec	Longitude Deg	Longitude Min	Longitude Sec	Receiving Water *(name)*
011	32	51	42	79	57	51	COOPER RIVER

II. Discharge Date *(If a new discharger, the date you expect to begin discharging)*

10/16/95

III. Type of Waste

A. Check the box(es) indicating the general type(s) of wastes discharged.

☐ Sanitary Wastes ☐ Restaurant or Cafeteria Wastes ☒ Noncontact Cooling Water ☒ Other Nonprocess Wastewater (Identify) Stormwater

B. If any cooling water additives are used, list them here. Briefly describe their composition if this information is available.

No additives are used.

IV. Effluent Characteristics

A. Existing Sources - Provide measurements for the parameters listed in the left-hand column below, unless waved by the permitting authority *(see instructions)*.

B. New Discharges - Provide estimates for the parameters listed in the left-hand column below, unless waived by the permitting authority. Instead of the number of measurements taken, provide the source of estimated values *(see instructions)*.

Pollutant or Parameter	(1) Maximum Daily Value *(include units)*		(2) Average Daily Value *(last year)* *(include units)*		(3) or	(4)
	Mass	Concentration	Mass	Concentration	Number of Measurements Taken *(last year)*	Source of Estimate *(if new discharger)*
Biochemical Oxygen Demand (BOD)	NA	NA	NA	NA	NA	NA
Total Suspended Solids (TSS)	NA	NA	NA	NA	NA	NA
Fecal Coliform *(if believed present or if sanitary waste is discharged)*	NA	NA	NA	NA	NA	NA
Total Residual Chlorine *(if chlorine is used)*	NA	NA	NA	NA	NA	NA
Oil and Grease	NA	NA	NA	NA	NA	NA
* Total Organic Carbon (TOC)	NA	NA	NA	NA	NA	NA
Ammonia *(as N)*	NA	NA	NA	NA	NA	NA
Discharge Flow	Value NA		Value NA		NA	NA
pH *(give range)*	Value NA		Value NA		NA	NA
Temperature *(Winter)*	NA °C		NA °C		NA	NA
Temperature *(Summer)*	NA °C		NA °C		NA	NA

* If noncontact cooling water is discharged

NA - NO DATA AVAILABLE FROM THE NAVY

V. Except for leaks or spills, will the discharge described in this form be intermittent or seasonal? If yes, briefly describe the frequency of flow and duration. [X] Yes [ ] No

As described on Form 2C, some portions of the discharge from Drydock #5 are intermittent.

VI. Treatment System *(Describe briefly any treatment system(s) used or to be used)*

No treatment is used for the non-contact cooling water portion of the discharge.

VII. Other Information *(optional)*

Use the space below to expand upon any of the above questions or to bring to the attention of the reviewer any other information you feel should be considered in establishing permit limitations. Attach additional sheets, if necessary.

NA

VIII. Certification

I certify under penalty of law that this document and all attachments were prepared under my direction or supervision in accordance with a system designed to assure that qualified personnel properly gather and evaluate the information submitted. Based on my inquiry of the person or persons who manage the system or those persons directly responsible for gathering the information, the information submitted is, to the best of my knowledge and belief, true, accurate, and complete. I am aware that there are significant penalaties for submitting false information, including the possibility of fine and imprisonment for knowing violations.

A. Name & Official Title Mr. Robert Bower, Vice President	B. Phone No. *(area code & no.)* (803) 884-2811
C. Signature Robert Bower	D. Date Signed 16 Oct 95

NA - NO DATA AVAILABLE FROM THE NAVY

Form 2F

Application for Permit to Discharge Stormwater

Please print or type in the unshaded areas only

EPA ID Number *(copy from Item 1 of Form 1)*

Form Approved. OMB No. 2040-0086
Approval expires 05/31/92

Form 2F NPDES

EPA

United States Environmental Protection Agency
Washington, DC 20460

Application for Permit To Discharge Stormwater Discharges Associated with Industrial Activity

Paperwork Reduction Act Notice

Public reporting burden for this application is estimated to average 28.6 hours per application, including time for reviewing instructions, searching existing data sources, gathering and maintaining the data needed, and completing and reviewing the collection of information. Send comments regarding the burden estimate, or any other aspect of this collection of information, or suggections for improving this form, including suggestions which may increase or reduce this burden to: Chief, Information Policy Branch, PM-223, U.S. Environmental Protection Agency, 401 M St., SW, Washington, DC 20460, or Director, Office of Information and Regulatory Affairs, Office of Management and Budget, Washington, DC 20503.

I. Outfall Location

For each outfall, list the latitude and longitude of its location to the nearest 15 seconds and the name of the receiving water.

A. Outfall Number *(list)*	B. Latitude			C. Longitude			D. Receiving Water *(name)*
011	32	51	42	79	57	51	COOPER RIVER

II. Improvements

A. Are you now required by any Federal, State, or local authority to meet any implementation schedule for the construction, upgrading or operation of wastewater treatment equipment or practices or any other environmental programs which may affect the discharges described in this application? This includes, but is not limited to, permit conditions, administrative or enforcement orders, enforcement compliance schedule letters, stipulations, court orders, and grant or loan conditions.

1. Identification of Conditions, Agreements, Etc.	2. Affected Outfalls		3. Brief Description of Project	4. Final Compliance Date	
	Number	Source of Discharge		a. Required	b. Projected
NA					

B. You may attach additional sheets describing any additional water pollution (or other environemtnal projects which may affect your discharges) you now have under way or which you plan. Indicate whether each program is now under way or planned, and indicate your actual or planned schedules for construction.

III. Site Drainage Map

Attach a site map showing topography (or indicating the outline of drainage areas served by the outfall(s) covered in the application if a topographic map is unavailable) depicting the facility including: each of its intake and discharge structures; the drainage area of each storm water outfall; paved areas and buildings within the drainage area of each storm water outfall, each known past or present areas used for outdoor storage or disposal of significant materials, each existing structural control measure to reduce pollutants in storm water runoff, materials loading and access areas, areas where pesticides, herbicides, soil conditioners and fertilizers are applied; each of its hazardous waste treatment, storage or disposal units (including each area not required to have a RCRA permit which is used for accumulating hazardous waste under 40 CFR 262.34); each well where fluids from the facility are injected underground; springs, and other surface water bodies which receive storm water discharges from the facility.

Continue on Page 2

Continued from Page 1

IV. Narrative Description of Pollutant Sources

A. For each outfall, provide an estimate of the area (include units) of impervious surfaces (including paved areas and building roofs) drained to the outfall, and an estimate of the total surface area drained by the outfall.

Outfall Number	Area of Impervious Surface *(provide units)*	Total Area Drained *(provide units)*	Outfall Number	Area of Impervious Surface *(provide units)*	Total Area Drained *(provide units)*
011	2.41 ACRES	2.41 ACRES			

B. Provide a narrative description of significant materials that are currently or in the past three years have been treated, stored or disposed in a manner to allow exposure to storm water; method of treatment, storage, or disposal; past and present materials management practices employed, in the last three years, to minimize contact by these materials with storm water runoff; materials loading and access areas; and the location, manner, and frequency in which pesticides, herbicides, soil conditioners, and fertilizers are applied.

• FRESH SANDBLASTING ABBRASIVE, BLASTING DEBRIS AND SOLIID WASTES (PAPER, SCRAP METAL, ETC.) COME IN CONTACT WITH THE DRYDOCK FLOOR. THESE MATERIALS ARE ROUTINELY CLEANED FROM THE DRYDOCK FLOOR TO AVOID CONTACT WITH STORMWATER. FRESH ABBRASIVE SHALL BE STORED OUTSIDE OF THE DRYDOCK AND PROTECTED FROM THE ELEMENTS. SPENT GRIT AND OTHER WASTE DEBRIS IS SHOVELED, SWEPT, AND VACUUMED FROM THE DRYDOCK FLOOR, PRIOR TO FLOODING.

• ALL PAINTS, OIL AND GREASE, AND SOLVENTS ARE STORED IN FACILITIES OUTSIDE OF THE DRYDOCK. THIER USE IN THE DRYDOCK IS HANDLED WITH CAUTION TO AVOID SPILLS AND DRIP PANS ARE POSITIONED BENEATH THEIR USE. PAINT MIXING SHALL BE DONE IN A CONTROLLED AREA OUTSIDE OF THE DRYDOCK. ALL PAINT AND SOLVENT SPILLS SHALL BE TREATED AS OIL SPILLS AND CLEANED UP IMMEDIATELY. PAINT POTS, GUNS, HOSES, ETC. SHALL BE CHECKED FOR LEAKS PRIOR TO USE.

C. For each outfall, provide the location and a description of existing structural and nonstructural control measures to reduce pollutants in storm water runoff; and a description of the treatment the storm water receives, including the schedule and type of maintenance for control and treatment measures and the ultimate disposal of any solid or fluid wastes other than by discharge.

Outfall Number	Treatment	List Codes from Table 2F-1
011	FILTERING MEASURES WILL BE INPLACE IN THE DRAINAGE CHANNELS AND AROUND DRAINAGE GRATES TO TRAP OIL & GREASE AND PARTICULATE.	1-M 1-T

V. Nonstormwater Discharges

A. I certify under penalty of law that the outfall(s) covered by this application have been tested or evaluated for the presence of nonstormwater discharges, and that all nonstormwater discharges from these outfall(s) are identified in either an accompanying Form 2C or Form 2E application for the outfall.

Name and Official Title *(type or print)*	Signature	Date Signed
ROBERT BOWER, VICE PRESIDENT	Robert Bowers	16 Oct 95

B. Provide a description of the method used, the date of any testing, and the onsite drainage points that were directly observed during a test.

TO DATE, WE ARE NOT AWARE OF ANY STORMWATER POLLUTANT TESTING CONDUCTED BY THE NAVY. IF NECESSARY, ANALYTICAL DATA COULD BE COLLECTED DURING SHIP REPAIR OPERATION PERIODS.

VI. Significant Leaks or Spills

Provide existing information regarding the history of significant leaks or spills of toxic or hazardous pollutants at the facility in the last three years, including the approximate date and location of the spill or leak, and the type and amount of material released.

NONE KNOWN

 Continue on Page 2B

Continued from Page 2

EPA ID Number *(copy from Item 1 of Form 1)*
SC0004006

VII. Discharge Information

A,B,C,&D: See instructions before proceeding. Complete one set of tables for each outfall. Annotate the outfall number in the space provided. Tables VII-A, VII-B, and VII-C are included on separate sheets numbered VII-1 and VII-2.

E: Potential discharges not covered by analysis - is any pollutant listed in Table 2F-4 a substance or a component of a substance which you currently use or manufacture as an intermediate or final product or byproduct?

[X] Yes *(list all such pollutants below)* [ ] No *(Go to Section VIII)*

XYLENE - THIS IS A COMPOUND OF SOME PAINTS THAT MAY BE USED IN THE DRYDOCK AND COULD POTENTIALLY BE DISCHARGED FROM THE DRYDOCK.

VIII. Biological Toxicity Testing Data

[ ] Yes *(list results below)* [X] No *(Go to Section IX)*

IT APPEARS THAT THE NAVY HAS NO TOXICITY TESTING DATA FOR THIS OUTFALL.

IX. Contract Analysis Information

Were any of the analyses reported in item V performed by a contract laboratory or consulting firm?

[ ] Yes *(list the name, address, and telephone number of, and pollutants analyzed by each laboratory or firm below)* [X] No *(Go to Section X)*

A. Name	B. Address	C. Area Code & Phone Number	D. Pollutants Analyzed

X. Certification

I certify under penalty of law that this document and all attachments were prepared under my direction or supervision in accordance with a system designed to assure that qualified personnel properly gather and evaluate the information submitted. Based on my inquiry of the person or persons who manage the system or those persons directly responsible for gathering the information, the information submitted is, to the best of my knowledge and belief, true, accurate, and complete. I am aware that there are significant penalties for submitting false information, including the possibility of fine and imprisonment for knowing violations.

A. Name & Official Title (type or print)	B. Area Code & Phone Number
MR. ROBERT BOWER, VICE PRESIDENT	(803) 884-2811
C. Signature *Robert Bower*	D. Date Signed *16 Oct 95*

EPA ID Number *(copy from Item 1 of Form 1)*

Form Approved. OMB No. 2040-0086
Approval expires 05/31/92

VII. Discharge Information *(Continued from page 3 of Form 2F)*

Part A - You must provide the results of at least one analysis for every pollutant in this table. Complete one table for each outfall. See instructions for additional details.

Pollutant and CAS Number (if available)	Maximum Values (include units)				Average Values (include units)				Outfall No.: 011	
	Grab Sample Taken During First 30 Minutes		Flow-weighted Composite		Grab Sample Taken During First 30 Minutes		Flow-weighted Composite		Number of Storm Events Sampled	Sources of Pollutants
	mg/l	lbs	mg/l	lbs	mg/l	lbs	mg/l	lbs		
Oil and Grease	NA	NA	NA	NA	NA	NA	NA	NA	NA	NA
Biological Oxygen Demand (BOD)	NA	NA	NA	NA	NA	NA	NA	NA	NA	NA
Chemical Oxygen Demand (COD)	NA	NA	NA	NA	NA	NA	NA	NA	NA	NA
Total Suspended Solids (TSS)	NA	NA	NA	NA	NA	NA	NA	NA	NA	NA
Total Kjeldahl Nitrogen	NA	NA	NA	NA	NA	NA	NA	NA	NA	NA
Nitrate Plus Nitrite Nitrogen	NA	NA	NA	NA	NA	NA	NA	NA	NA	NA
Total Phosphorus	NA	NA	NA	NA	NA	NA	NA	NA	NA	NA

pH *(Grab)* Minimum NA Maximum NA *(Composite)* Minimum NA Maximum NA

Part B - List each pollutant that is limited in an effluent guideline which the facility is subject to or any pollutant listed in the facility's NPDES permit for its process wastewater (if the facility is operating under an existing NPDES permit). Complete one table for each outfall. See instructions for additional details and requirements.

Pollutant and CAS Number (if available)	Maximum Values (include units)				Average Values (include units)				Outfall No.:	
	Grab Sample Taken During First 30 Minutes		Flow-weighted Composite		Grab Sample Taken During First 30 Minutes		Flow-weighted Composite		Number of Storm Events Sampled	Sources of Pollutants
	mg/l	lbs	mg/l	lbs	mg/l	lbs	mg/l	lbs		
NA	NA	NA	NA	NA	NA	NA	NA	NA	NA	NA

* NA- NO DATA AVAILABLE FROM THE NAVY

Part C - List each pollutant in Tables 2F-2, 2F-3, and 2F-4 that you know or have reason to believe is present. See the instructions for additional details and requirements. Complete one table for each outfall.

Pollutant and CAS Number (if available)	Maximum Values (include units)				Average Values (include units)				Outfall No.:	
	Grab Sample Taken During First 30 Minutes		Flow-weighted Composite		Grab Sample Taken During First 30 Minutes		Flow-weighted Composite		Number of Storm Events Sampled	Sources of Pollutants
	mg/l	lbs	mg/l	lbs	mg/l	lbs	mg/l	lbs		
NA	NA	NA	NA	NA	NA	NA	NA	NA	NA	NA

Part D - Provide data for the storm event(s) which resulted in the maximum values for the flow weighted composite sample.

1. Date of Storm Event	2. Duration of Storm Event (minutes)	3. Total Rainfall During Storm Event (inches)	4. Number of Hours Between Beginning of Storm Measured and End of Previous Measurable Rain Event	5. Maximum Flow Rate During Rain Event (gallons/ minute or specify units)	6. Total Flow From Rain Event (gallons or specify units)	7. Season Sample was Taken	8. Form of Precipitation (rainfall, snowmelt)
NA	NA	NA	NA	NA	NA	NA	NA

9. Provide a description of the method of flow measurement or estimate.

NA - IT APPEARS THAT NO STORMWATER MONITORING WAS CONDUCTED BY THE NAVY.

NA - NO DATA AVAILABLE FROM THE NAVY

Appendix I

Supplement to NPDES Application

SUPPLEMENT TO NPDES APPLICATION

FACILITY: DETYENS SHIPYARDS, INC.
GRAVING DRYDOCK NO. 5
CHARLESTON NAVAL SHIPYARD
CHARLESTON, SOUTH CAROLINA

DATE: October 16,1995

ITEM 1: Please give a short description of the plant location, if the address is not a specific location. Example: Plant is located at the interchange of Interstate 26 and U.S. Highway #1.

THE DRYDOCK FACILITY IS LOCATED WITHIN CHARLESTON NAVAL SHIPYARD AND IS REFERRED TO AS GRAVING DRYDOCK NO. 5. CHARLESTON NAVAL SHIPYARD IS LOCATED IN CHARLESTON, SOUTH CAROLINA

ITEM 2: Please give a description of the location of the discharge point into the receiving stream using some landmark as a reference point, i.e., bridge, stream, road junction, the plant itself, etc. Give the direction and the distance in feet from the reference point. Example: Discharge #001 is into Johnny Creek approximately 300 feet directly behind the plant. Discharge #002 is into Doris Creek 150 feet downstream from U.S. Highway #30 bridge.

THE OUTFALL FOR DRYDOCK NO. 5 IS REFERRED TO BY THE NAVY IN THEIR NPDES PERMIT AS OUTFALL 011. THIS OUTFALL IS LOCATED TO THE SOUTH SIDE OF THE DRYDOCK. ITS POSITION IS APPROXIMATELY 20 FEET SOUTH OF THE SOUTH END OF THE DRYDOCK'S CAISSON. THE OUTLET IS BELOW WATER LEVEL, THEREFORE, IT IS NOT VISUALLY ACCESSABLE. FIGURES 2, 3 AND 6 ILLUSTRATE THIS LOCATION.

ITEM 3: Please locate the discharge on a U.S. Geological Survey 7 1/2 minute quad sheet (or a 15 minute quad if a 7 1/2 minute quad is not available for the area). The entire quad sheet need not be submitted. An 8 1/2 by 11 inch photocopy of the applicable portion of the map is sufficient. The quad sheet name must be provided on the copy submitted to the Department.

A SECTION OF THE CHARLESTON, SOUTH CAROLINA USGS TOPOGRAPHIC MAP SHOWING THE DRYDOCK SITE IS INCLUDED AS FIGURE 1.

Appendix II

Sludge Disposal Supplement

SOUTH CAROLINA DEPARTMENT OF HEALTH AND ENVIRONMENTAL CONTROL
BUREAU OF WATER POLLUTION CONTROL

SLUDGE DISPOSAL SUPPLEMENT FOR NPDES AND ND PERMIT APPLICATIONS

Facility Name: Detyens Shipyards, Inc., Drydock No. 5, Charleston Naval Shipyard

Permit Number: SC00_____ (leave blank for a new facility)
or ND00_____

Please check your proposed or current sludge disposal procedure:

I. Existing Facilities:

_____ Lagoon or other facility with no routine sludge disposal.

_____ Sludge disposal at another wastewater treatment facility. Attached is a recent letter of acceptance dated _____. This letter must include the NPDES or ND number of the treatment facility accepting the sludge for disposal. If no previous SCDHEC approval has been granted on the disposal method, then please include a detailed report on the existing sludge disposal method. See the attached requirements for Sludge Disposal Report A. If a previous SCDHEC approval has been granted, then include either a recent TCLP analysis on the sludge or a statement that the sludge characteristics have not changed since the last analysis.

_____ Sludge disposal at a landfill. Attached is SCDHEC Solid and Hazardous Waste approval dated _____, or other SCDHEC approval dated _____. If no previous SCDHEC approval has been granted on the disposal method, then please include a detailed report on the existing sludge disposal method. See the attached requirements for Sludge Disposal Report B.

_____ Sludge disposal by land application. Attached is SCDHEC approval letter dated _____. If no previous SCDHEC approval has been granted on the disposal method, then please include a detailed report on the existing sludge disposal method. See attached requirements for Sludge Disposal Report C.

X Spent sandblasting abbrasive is removed from the drydock and handled for disposal in accordance with Federal, State and local regulations.

II. Proposed Facilities:

_____ Lagoon or other facility with no routine sludge disposal.

_____ Proposed sludge disposal at another treatment facility. Please include a detailed report on the proposed sludge disposal method. See attached requirements for Sludge Disposal Report A.

_____ Proposed sludge disposal at a landfill. Please include a detailed report on the proposed sludge disposal method. See attached requirements for Sludge Disposal Report B.

_____ Proposed sludge disposal by land application. Please include a detailed report on the proposed sludge disposal method. See attached requirements for Sludge Disposal Report C. Please note this proposed alternative may require significant lead time for SCDHEC approval since public notice of the sludge disposal site is required).

Please send this form and the appropriate sludge disposal report (if applicable) with your NPDES or ND permit application.

Figures

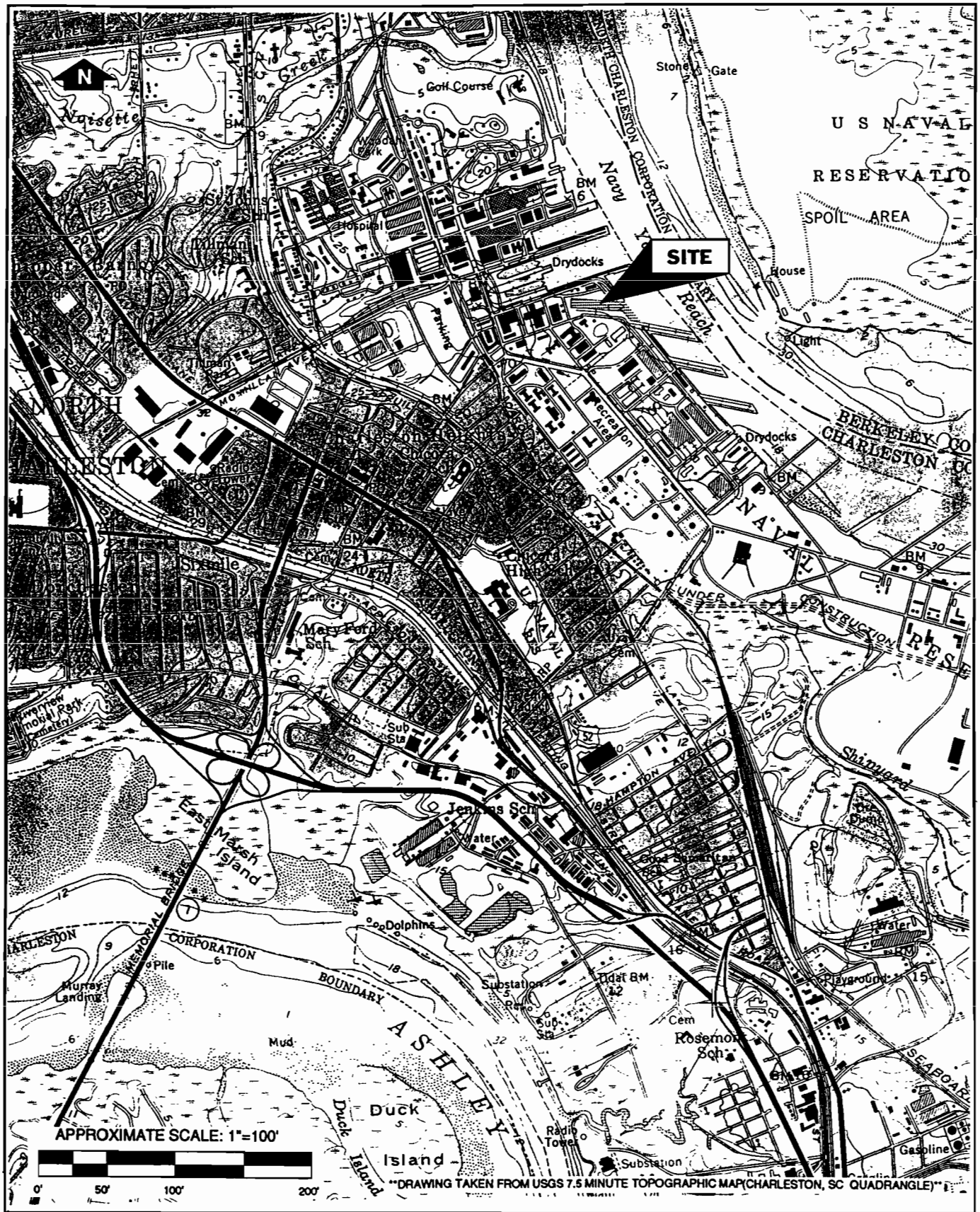

GENERAL ENGINEERING LABORATORIES, INC.

environmental consulting and analytical services

P.O. BOX 30712
CHARLESTON, SC 29417
(803) 556-6171

PROJECT: dtyn00195		
FACILITY CERTIFICATION REPORT DRYDOCK NO. 5 CHARLESTON NAVAL SHIPYARD CHARLESTON, SOUTH CAROLINA	SITE LOCATION MAP	FIGURE 1
DATE: October 12, 1995	DRAWN BY: SMY / APPRV. BY: TDH	

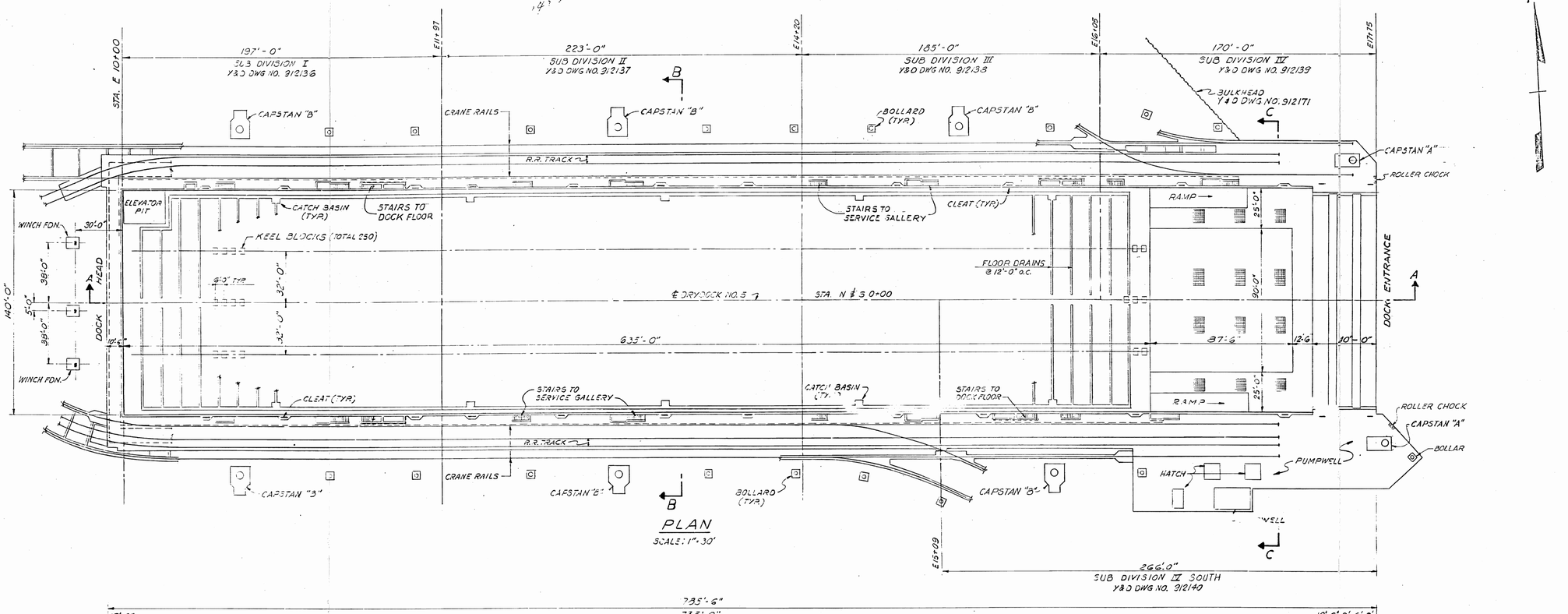

PLAN
SCALE: 1" = 30'

SECTION A-A
SCALE: 1" = 30'

SECTION B-B
SCALE: 1" = 30'

SECTION C-C
SCALE: 1" = 30'

ELEVATION AT ENTRANCE
SCALE 1" = 30'

NOTES:
1. FOR DESIGN DATA SEE Y&D DWG. NO. 912122
2. FOR DRAINAGE COURSE DETAILS SEE Y&D DWG. NO. 912133

RECORD DRAWING
3 AUG 1964

SYMBOL	DESCRIPTION	DATE	APPROVAL
	AS BUILT DWG. NO CORRECTIONS		

REVISIONS

DEPARTMENT OF THE NAVY
U. S. NAVAL BASE
144 EAST 44TH ST. NEW YORK, N. Y.

SOUTHEAST DIVISION - BUREAU OF YARDS & DOCKS
CHARLESTON, S. C.

FREDERIC R. HARRIS, INC. AND LOUIS Y. DAWSON, INC.
CONSULTING ENGINEERS
8 GILLON ST. CHARLESTON, S. C.

DES BY: H.T.
DRWN BY: E.Q. & W.C.
CHK BY: H.T.
PROJ MGR. G.J.

CHARLESTON NAVAL SHIPYARD — CHARLESTON, S. C.

DRYDOCK NO. 5

GENERAL PLAN

DIRECTOR DES. DIV.
ASST DIRECTOR S.E. DIV.

APPROVED _____ RESIDENT OFFICER IN CHARGE _____ DATE _____

APPROVED FOR BUREAU OF YARDS & DOCKS
DIRECTOR FOR CHIEF OF BUREAU
DATE 5 JAN 62

SCALE 1" = 30'-0" — SPEC. 37200/61

SHEET 13 OF 145 NBy 37200

Y & D DRAWING NO. 912132

H305-40

SATISFACTORY TO
SIGNATURE
DATE _____ TITLE

SUBMITTED BY:
FREDERIC R. HARRIS, INC.
SIGNATURE AND TITLE
LOUIS Y. DAWSON, INC.
SIGNATURE AND TITLE

FIGURE 3

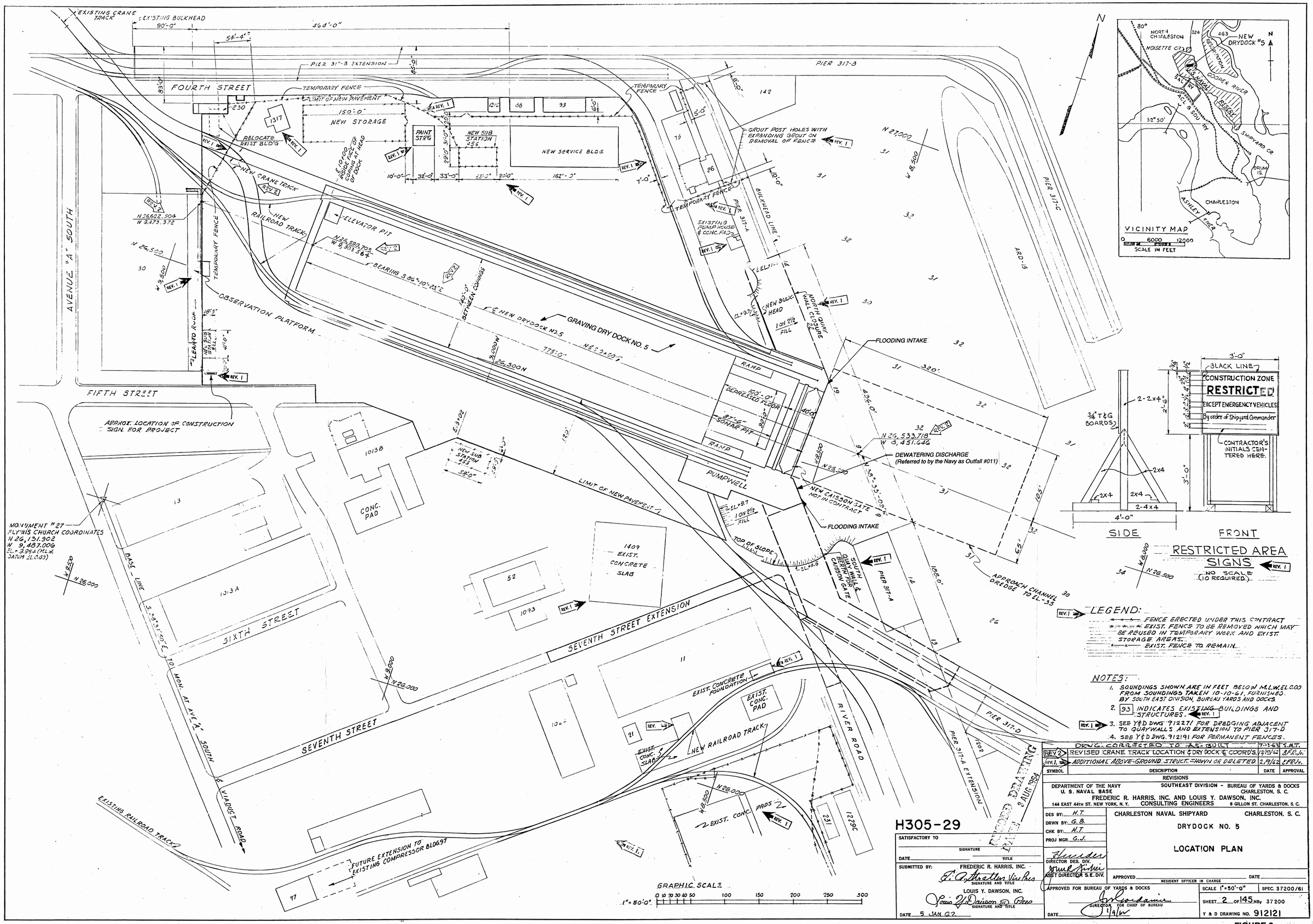
EXISTING CRANE TRACK
EXISTING BULKHEAD
90'-0"
464'-0"
54'-4"
PIER 317-B EXTENSION
85'-0"
PIER 317-B
FOURTH STREET
TEMPORARY FENCE
LIMIT OF NEW PAVEMENT
150'-0"
NEW STORAGE
PAINT STRG
NEW SUB STATION 433
NEW SERVICE BLDG.
RELOCATE EXIST BLDG
NEW CRANE TRACK
NEW RAILROAD TRACK
ELEVATOR PIT
BEARING S 86°-10'-23"E
140'-0" BETWEEN COPINGS
℄ NEW DRYDOCK NO.5
GRAVING DRY DOCK NO. 5
775'-0"
OBSERVATION PLATFORM
AVENUE "A" SOUTH
FIFTH STREET
APPROX. LOCATION OF CONSTRUCTION SIGN FOR PROJECT
GROUT POST HOLES WITH EXPANDING GROUT ON REMOVAL OF FENCE
BULKHEAD LINE
EXISTING PUMPHOUSE & CONC. PAD
NEW BULKHEAD
NORTH QUAY WALL CLOSURE
1 ON 2½ FILL
FLOODING INTAKE
RAMP
100'-0" DEPRESSED FLOOR
37'-6" SONAR PIT
PUMPWELL
DEWATERING DISCHARGE (Referred to by the Navy as Outfall #011)
NEW CAISSON GATE NOT IN CONTRACT
TOP OF SLOPE
SOUTH QUAYWALL & BERTH FOR CAISSON GATE
PIER 317-A
PIER 317-C
ARD-15
APPROACH CHANNEL DREDGE TO EL.-35
MONUMENT #27 FLY'WIS CHURCH COORDINATES N 26,131.902 W 9,487.006 EL.+3.95 (M.L.W. DATUM EL.0.00)
BASE LINE
S 88°-31'-10"E TO MON. AT AVE. "A" SOUTH & VIADUCT ROAD
CONC. PAD
10138
10138
1409 EXIST. CONCRETE SLAB
52
1093
SIXTH STREET
SEVENTH STREET EXTENSION
SEVENTH STREET
EXIST. CONCRETE FOUNDATION
EXIST. CONC. PAD
EXIST. CONC. SLAB
NEW RAILROAD TRACK
EXIST. CONC. PADS
RIVER ROAD
PIER 317-D
PIER 317-A EXTENSION
EXISTING RAILROAD TRACK
FUTURE EXTENSION TO EXISTING COMPRESSOR BLDG.97
GRAPHIC SCALE
1" = 50'-0"
0 10 20 30 40 50 100 150 200 250 300
VICINITY MAP
NORTH CHARLESTON
NOISETTE CR.
NEW DRYDOCK #5
COOPER RIVER
SHIPYARD CR.
CHARLESTON
ASHLEY RIVER
SCALE IN FEET
SIDE
FRONT
RESTRICTED AREA SIGNS
NO SCALE (10 REQUIRED)
CONSTRUCTION ZONE
RESTRICTED
EXCEPT EMERGENCY VEHICLES
By order of Shipyard Commander
CONTRACTOR'S INITIALS CENTERED HERE.
BLACK LINE
LEGEND:
FENCE ERECTED UNDER THIS CONTRACT
EXIST. FENCE TO BE REMOVED WHICH MAY BE REUSED IN TEMPORARY WORK AND EXIST. STORAGE AREAS.
EXIST. FENCE TO REMAIN.
NOTES:
1. SOUNDINGS SHOWN ARE IN FEET BELOW M.L.W. EL.0.00 FROM SOUNDINGS TAKEN 10-10-61, FURNISHED BY SOUTH EAST DIVISION, BUREAU YARDS AND DOCKS.
2. 93 INDICATES EXISTING BUILDINGS AND STRUCTURES.
3. SEE Y&D DWG 912271 FOR DREDGING ADJACENT TO QUAYWALLS AND EXTENSION TO PIER 317-D
4. SEE Y&D DWG. 912191 FOR PERMANENT FENCES.
H305-29
SATISFACTORY TO
SIGNATURE
DATE TITLE
SUBMITTED BY: FREDERIC R. HARRIS, INC.
SIGNATURE AND TITLE
LOUIS Y. DAWSON, INC.
SIGNATURE AND TITLE
DATE 5 JAN 62
DRWG. CORRECTED TO AS-BUILT 7-13-63 S.M.T.
REV 2 REVISED CRANE TRACK LOCATION & DRY DOCK ℄ COORD'S. 2/15/62 R.F.R.Jr.
REV. 1 ADDITIONAL ABOVE-GROUND STRUCT. SHOWN OR DELETED 2/9/62 R.F.R.Jr.
SYMBOL DESCRIPTION DATE APPROVAL
REVISIONS
DEPARTMENT OF THE NAVY
U. S. NAVAL BASE
144 EAST 44TH ST. NEW YORK, N. Y.
SOUTHEAST DIVISION - BUREAU OF YARDS & DOCKS
CHARLESTON, S. C.
FREDERIC R. HARRIS, INC. AND LOUIS Y. DAWSON, INC.
CONSULTING ENGINEERS
8 GILLON ST. CHARLESTON, S. C.
DES BY: H.T.
DRWN BY: G.B.
CHK BY: H.T.
PROJ MGR. G.J.
DIRECTOR DES. DIV.
ASST DIRECTOR S.E. DIV.
CHARLESTON NAVAL SHIPYARD
CHARLESTON, S. C.
DRYDOCK NO. 5
LOCATION PLAN
APPROVED
RESIDENT OFFICER IN CHARGE
DATE
APPROVED FOR BUREAU OF YARDS & DOCKS
DIRECTOR FOR CHIEF OF BUREAU
DATE
SCALE 1" = 50'-0"
SPEC. 37200/61
SHEET 2 OF 145 SHEETS BY 37200
Y & D DRAWING NO. 912121
FIGURE 2

DRYDOCK NO. 5

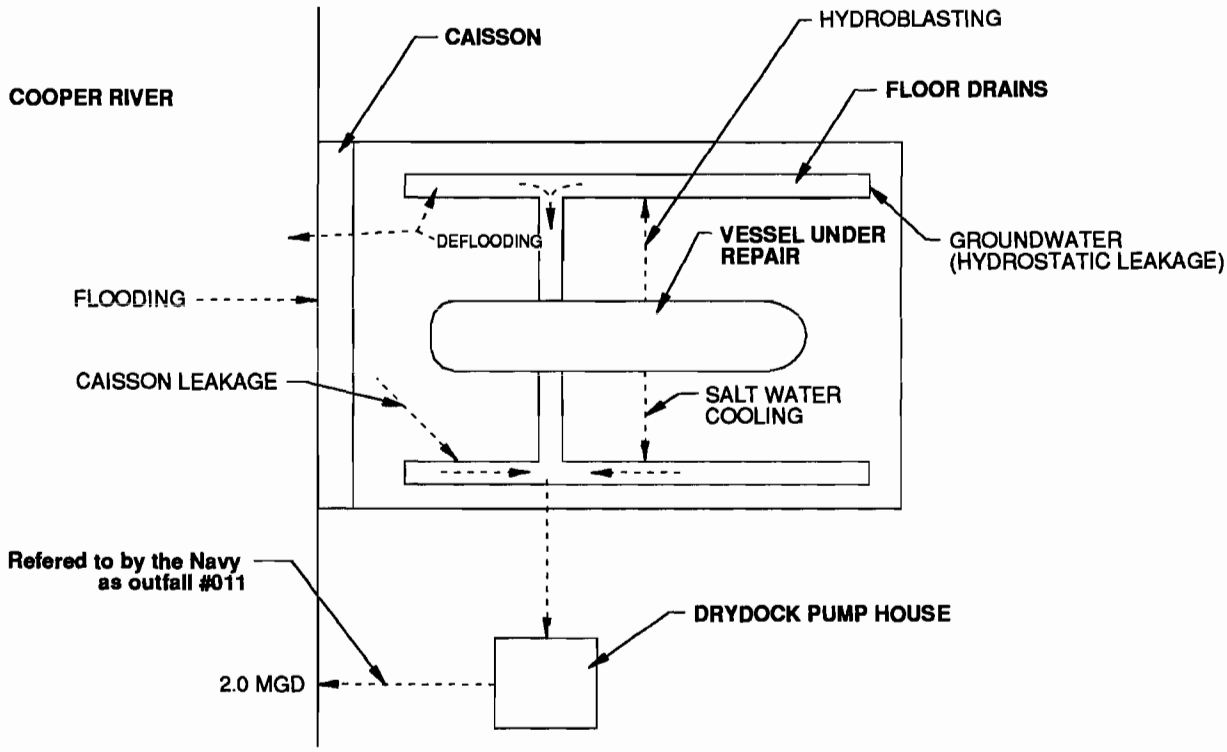

LEGEND

- - - - - - - → DISCHARGE / FLOODING FLOW DIRECTION

GENERAL ENGINEERING LABORATORIES, INC. environmental consulting and analytical services P.O. BOX 30712 CHARLESTON, SC 29417 (803) 556-8171	PROJECT: dtyn00195		
	FACILITY CERTIFICATION REPORT DRYDOCK NO. 5 CHARLESTON NAVAL SHIPYARD CHARLESTON, SOUTH CAROLINA	WATER FLOW LINE DRAWING	FIGURE 4
	DATE: October 12, 1995	DRAWN BY: SMY / APPRV. BY: TDH	

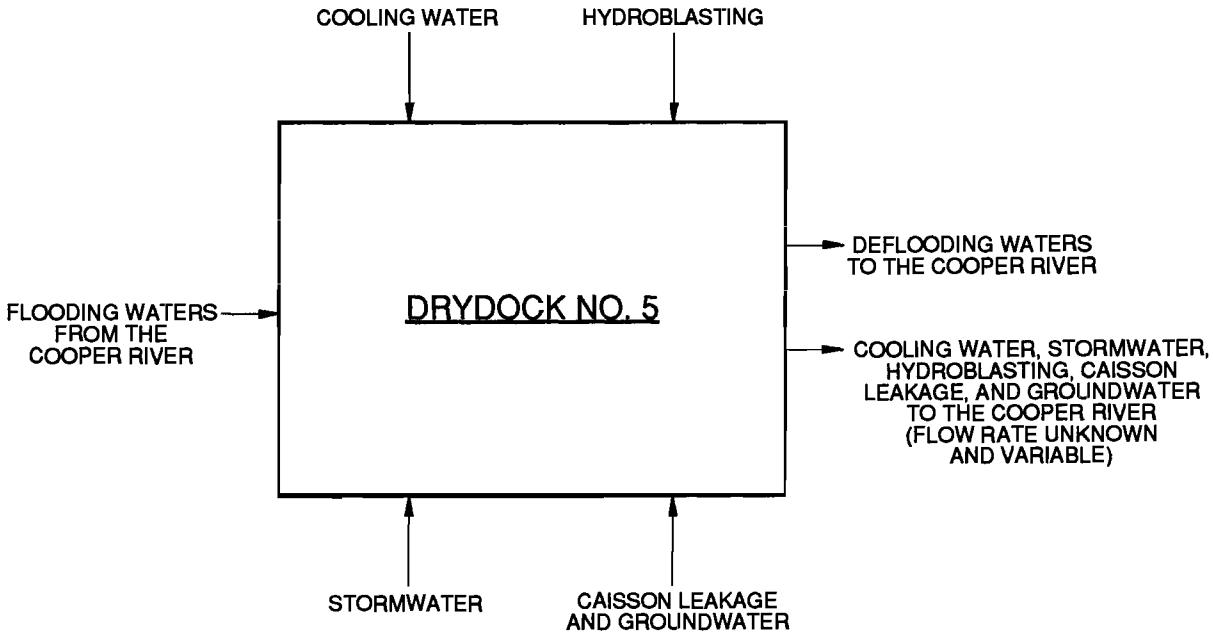

GENERAL ENGINEERING LABORATORIES, INC. environmental consulting and analytical services P.O. BOX 30712 CHARLESTON, SC 29417 (803) 556-8171	PROJECT: dtyn00195		
	FACILITY CERTIFICATION REPORT DRYDOCK NO. 5 CHARLESTON NAVAL SHIPYARD CHARLESTON, SOUTH CAROLINA	WATER BALANCE DIAGRAM	FIGURE 5
	DATE: October 12, 1995	DRAWN BY: SMY / APPRV. BY: TDH	

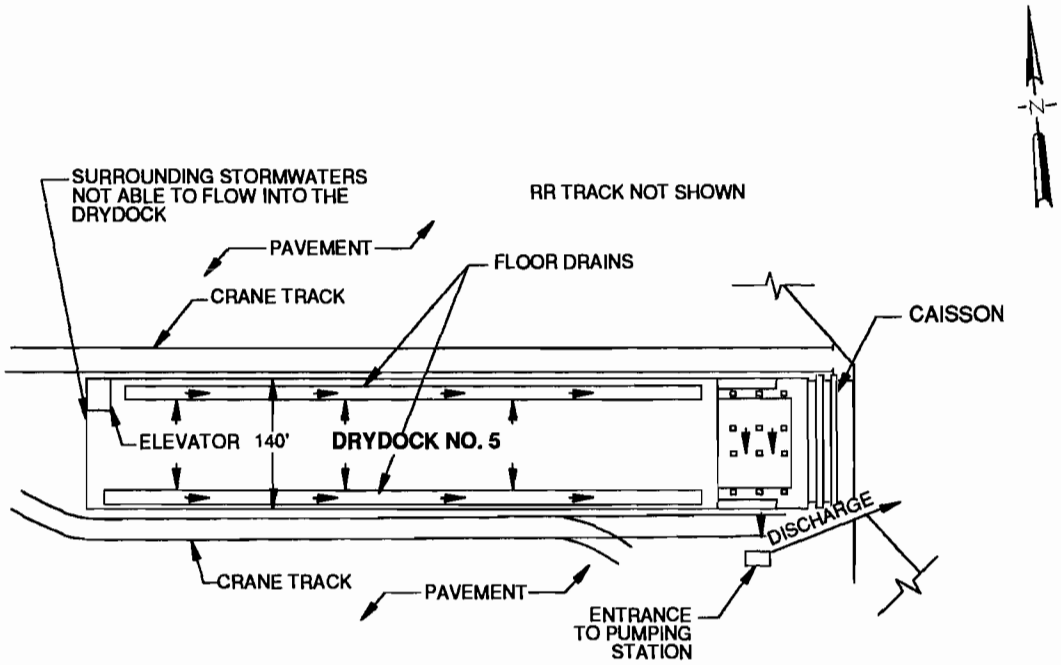

PLAN VIEW

LEGEND

DRAINAGE / PUMPING DIRECTION

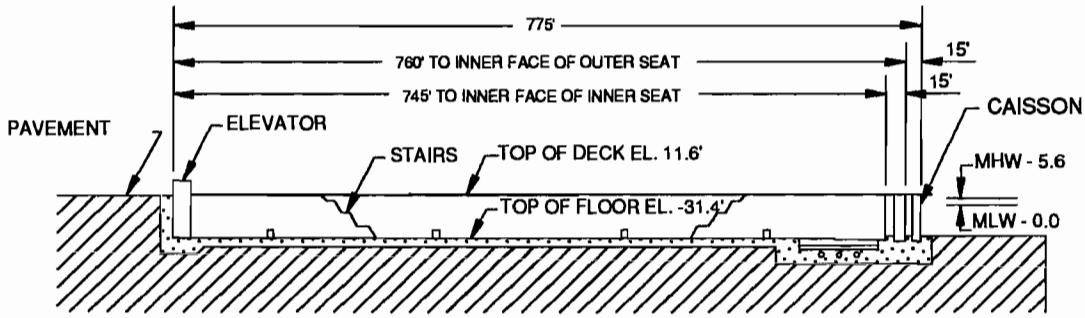

LONGITUDINAL PLAN

APPROXIMATE SCALE: 1"= 200'

0' 100' 200' 400'

GENERAL ENGINEERING LABORATORIES, INC. environmental consulting and analytical services P.O. BOX 30712 CHARLESTON, SC 29417 (803) 556-6171	PROJECT: dtyn00195		
	FACILITY CERTIFICATION REPORT DRYDOCK NO. 5 CHARLESTON NAVAL SHIPYARD CHARLESTON, SOUTH CAROLINA	SITE DRAINAGE PLAN	FIGURE 6
	DATE: October 12, 1995	DRAWN BY: SMY / APPRV. BY: TDH	