N61165.AR.003964
CNC CHARLESTON
5090.3a

COMPLETION REPORT INTERIM/STABILIZATION MEASURE FOR AREA OF CONCERN 626 (AOC626) FUEL FARM WITH TRANSMITTAL CNC CHARLESTON SC
5/22/1997
U S NAVY

COMPLETION REPORT

INTERIM/STABILIZATION MEASURE FOR
AOC 626 (FUEL FARM)
NAVAL BASE CHARLESTON
CHARLESTON SC

Prepared for:

DEPARTMENT OF THE NAVY
SOUTHERN DIVISION
NAVAL FACILITIES ENGINEERING COMMAND
CHARLESTON SC

Prepared by:

Supervisor of Shipbuilding, Conversion and Repair,
USN, (SUPSHIP) Portsmouth Va.,
Environmental Detachment Charleston, S.C.
1899 North Hobson Ave.
North Charleston, SC 29405-2106

May 22, 1997

Ser: 586

MAY 19 1997

MEMORANDUM

From: Director, Supervisor of Shipbuilding, Conversion and Repair, USN Portsmouth Va., Environmental Detachment, Charleston, SC (SPORTENVDETCHASN)

To: Southern Division Naval Facilities Engineering Command (Code 18B-Hayes Patterson)

Subj: COMPLETION REPORT FOR INTERIM MEASURE AREA OF CONCERN 626 (AOC-626) FORMER CHARLESTON NAVAL SUPPLY CENTER FUEL FARM - FINAL DRAFT

Ref: (a) Completion Report for Interim Measure for AOC-626 - Preliminary Draft

1. Please make changes as provided below to reference (a). These pages reflect changes made per Southern Division request dated 8 May 1997 and are submitted as the Final Draft.

a. Replace text pages ii through 5-1.

b. Add Appendix D cover sheet at end of report for collection system drawings and move drawings to this appendix.

2.. Southern Division is requested to review the enclosed final draft of the Completion Report for AOC-626 and prepare a cover letter to accompany distribution. Questions and/or comments concerning this final draft may be addressed to Tammy Gunter at 743-6777 (ext.237) or Terry Lewis (ext.147).

E.R. Dearhart

Copy to:
File
T. Lewis
T. Gunter

Ser: 529

APR 2 4 1997

MEMORANDUM

From: Director, Supervisor of Shipbuilding, Conversion and Repair, USN Portsmouth Va., Environmental Detachment, Charleston, SC (SPORTENVDETCHASN)
To: Southern Division Naval Facilities Engineering Command (Code 18B-Hayes Patterson)

Subj: COMPLETION REPORT FOR INTERIM MEASURE AREA OF CONCERN 626 (AOC-626) FORMER CHARLESTON NAVAL SUPPLY CENTER FUEL FARM - PRELIMINARY DRAFT

Ref: (a) Notice To Proceed For Project C96018, AOC-626 Former Charleston Naval Supply Center Fuel Farm, Charleston Naval Complex, Southern Division Memo 5090, Code 18B4 (dated 29 August 1996)

Encl: (1) Completion Report for Interim Measure for AOC-626 - Preliminary Draft (1 copy)

1. Background. SPORTENVDETCHASN was authorized per reference (a) to proceed with the execution of Interim Measure Work Plan for AOC-626 (former Charleston Naval Supply Center Fuel Farm). AOC-626 is located in Resource Conservation and Recovery Act (RCRA) Facility Investigation (RFI) Zone G, at the corner of Hobson Avenue and Viaduct Road. It consists of four large fuel tanks, several smaller tanks, various pumping and piping systems, and waste oil and wastewater processing plants. The scope of this Interim Measure was limited to the excavation of petroleum saturated soil and the removal of the abandoned fuel line to prevent further contamination to the site.

2. Action. Southern Division is requested to review the enclosed preliminary draft of the Completion Report of the Interim Measure for AOC-626. Following concurrence by Southern Division, final copies of the Completion Report will be provided to SCDHEC. Questions and/or comments concerning this preliminary draft may be addressed to Tammy Gunter at 743-6777 (ext.237) or Terry Lewis at 743-6777 (ext.147).

E.R. Dearhart

Copy to (w/o encls):
File
T. Lewis

COMPLETION REPORT

INTERIM/STABILIZATION MEASURE FOR
AOC 626 (FUEL FARM)
NAVAL BASE CHARLESTON
CHARLESTON SC

Prepared for:

DEPARTMENT OF THE NAVY
SOUTHERN DIVISION
NAVAL FACILITIES ENGINEERING COMMAND
CHARLESTON SC

Prepared by:

Supervisor of Shipbuilding, Conversion and Repair,
USN, (SUPSHIP) Portsmouth Va.,
Environmental Detachment Charleston, S.C.
1899 North Hobson Ave.
North Charleston, SC 29405-2106

April 14, 1997

TABLE OF CONTENTS

Section **Page**

Table of Contents ii

List of Appendices iii

Acronyms, Abbreviations and Symbols iv

1. Introduction 1-1
   - 1.1 Installation Restoration Program 1-1
     - 1.1.1 Naval Base Charleston Installation Restoration Program 1-1
   - 1.2 Interim Measures 1-1
   - 1.3 Area of Concern 626 1-1
   - 1.4 Area of Concern 626 Interim Measure 1-2

2. Interim Measure Execution 2-1
   - 2.1 Actions Required by Interim Measure Work Plan 2-2
   - 2.2 Observations Noted 2-2
     - 2.2.1 Asbestos Pipe Insulation 2-2
     - 2.2.2 Soil Conditions 2-2
     - 2.2.3 Conditions of Pipeline 2-2
     - 2.2.4 Underground Interferences 2-2
     - 2.2.5 Unidentified Pipeline 2-2
   - 2.3 Plan Modifications and Justification 2-3

3. Interim Measure Outcome 3-1
   - 3.1 Site Conditions Following Completion of Work 3-1

TABLE OF CONTENTS (cont'd)

Section **Page**

4. Sampling 4-1
   4.1 Sampling Evolutions and Results 4-1

5. Waste Generation 5-1
   5.1 Hazardous/Potentially Hazardous Waste 5-1
   5.2 Non-Hazardous Waste 5-1
      5.2.1 Non-Hazardous Excavated Soil 5-1
      5.2.2 Pipeline 5-1

Appendix A Site Maps A-1
Appendix B Sampling Documentation B-1
Appendix C Photographs C-1
Appendix D Drawings D-1

ACRONYMS, ABBREVIATIONS and SYMBOL

ACM	Asbestos Containing Material
AOC	Area of Concern
BLS	Below Land Surface
CMS	Corrective Measures Study
DERP	Defense Environmental Restoration Program
DET	Environmental Detachment Charleston
DON	Department of the Navy
FO	Fuel Oil
IM	Interim Measure
IR	Installation Restoration
PVC	Polyvinyl Chloride
RCRA	Resource Conservation and Recovery Act
RFA	RCRA Facility Assessment
RFI	RCRA Facility Investigation
SARA	Superfund Amendments and Reauthorization Act
SCDHEC	South Carolina Department of Health and Environmental Control
SOUTHDIV	Southern Division Naval Facilities Engineering Command
SUPSHIP	Supervisor of Shipbuilding, Conversion and Repair, USN
SWMU	Solid Waste Management Unit
USN	United States Navy

1. INTRODUCTION

1.1 INSTALLATION RESTORATION PROGRAM. The purpose of the Department of the Navy (DON) Installation Restoration (IR) Program is to identify, assess, characterize and clean up or control contamination from past hazardous waste disposal operations and hazardous material spills at Navy and Marine Corps activities. The Defense Environmental Restoration Program (DERP) is codified in the Superfund Amendments and Reauthorization Act (SARA) Section 211 (10 USC 2701). The IR Program is a component of DERP.

1.1.1 Naval Base Charleston IR Program. At Naval Base Charleston, a Resource Conservation and Recovery Act (RCRA) Facility Assessment (RFA) was prepared which divided the Naval Base into zones and identified Solid Waste Management Units (SWMUs) and Areas of Concern (AOCs) within each zone. The RFA evaluated each SWMU and AOC and determined which sites required further investigation. Based on the RFA, a RCRA Facility Investigation (RFI) work plan has been or is being prepared for each zone containing SWMUs and AOCs requiring further investigation. On completion of the RFI for each Zone, a RFI report will be prepared for that zone. The RFI reports will identify SWMUs and AOCs containing wastes requiring remediation. Eventually, Corrective Measures Studies (CMSs) will be prepared to determine the best means of remediating each site.

1.2 INTERIM MEASURES. Interim Measures (IM) performed as part of the IR Program are intended to eliminate sources of environmental contamination or limit the spread of environmental contaminants prior to the completion of the RFI CMSs.

1.3 AOC 626. AOC 626 is the former Charleston Naval Supply Center Fuel Farm, located in Zone G at the corner of Hobson Avenue and Viaduct Road (see Map #1, Appendix A). It consists of four large fuel tanks, several smaller tanks, various pumping and piping systems, and waste oil and wastewater processing plants. In September 1994, an unspecified amount of diesel fuel oil was released from the Fuel Distribution System (FDS) at the intersection of Hobson Avenue and Viaduct Road. A leak in the abandoned 18" pipeline from the Chicora Tank Farm was determined to be the

source. Approximately 40,000 gallons of water/oil mixture was reportedly recovered from the site. Five vertical PVC recovery wells were installed by the Charleston Naval Shipyard (CNSY) Public Works (PW) department in an attempt to recover additional free product.

A pressure test conducted by contractors cleaning Naval Base pipelines on a separate 18″ pipe resulted in an eruption of oil and water above land surface in the abandoned 18″ pipe. Excavations in this area revealed a 2″ diameter hole in the pipe.

1.4 AOC 626 INTERIM MEASURE. During the interval between the RFI and the completion of the CMS, it was decided by Southern Division Naval Facilities Engineering Command (SOUTHDIV) that an IM would be performed by Supervisor of Shipbuilding, Conversion and Repair (SUPSHIP), United States Navy (USN), Portsmouth Va. Environmental Detachment Charleston (SPORTENVDETCHASN). The objective of this IM was to remove the petroleum saturated soil, a 200′ section of the 18″ pipeline, and install a product recovery system as required. The scope of this IM is limited to the specific spill area along Viaduct Road and not intended to remediate the entire Fuel Farm. This IM is consistent with the ultimate cleanup of AOC 626 and is not intended to circumvent the public participation process inherent within environmental cleanup under RCRA authority.

2. INTERIM MEASURE EXECUTION

2.1 ACTIONS REQUIRED BY INTERIM MEASURE WORKPLAN. The saturated soil and the abandoned 18″ fuel oil pipeline were removed to eliminate the source of contamination. A product recovery system was installed in an effort to recover additional free product. Required actions are listed below:

- Excavation of approximately 450 cubic yards of petroleum saturated soil (see Map #2, Appendix A) from land surface to the top of the 18″ pipeline, approximately 10′ below land surface (BLS).

- Removal of approximately 229 linear feet of 18″ fuel oil pipeline from the south valve pit to the west fence line on Viaduct Road. An 18″ aluminum expandable plug was installed at the valve pit end of the pipe removal. An 18″ polvinyl chloride (PVC) vertical standoff with a cap was installed on the opposite end at the west fence line to support future cleaning of the pipeline.

- Installation of a product recovery system that included 200′ of horizontal perforated 12″ PVC pipe and 5 vertical standoffs for product recovery (see Drawing #1, Appendix D).

- Repair of the manhole to the sewer system by brick and mortar replacement.

- Monthly pumping of the product recovery system not to exceed one year.

2.2 OBSERVATIONS NOTED

2.2.1 Asbestos Pipe Insulation. Pipe sections removed from the excavation site were encased in an asbestos type material. The material was sampled for asbestos and analyzed by the Naval Hospital Charleston Industrial Hygienist Department. It was determined that the first 33′ of pipe was non asbestos while the remaining pipeline was encased in friable asbestos insulation.

2.2.2 Soil Conditions. From land surface to approximately 1′ BLS, the soil appeared to be fill dirt. From 1′ BLS to the bottom of the 10′ excavation, the soil was a silty clay mixture. Contamination was apparent at 5′ BLS. The soil in this area was heavily stained with oil and had a strong petroleum odor. Free product was observed leaching from the sides of the open trench during excavation.

2.2.3 Conditions of Pipe Line. Oil and water were discovered in the abandoned 18″ pipeline. The contents of the pipeline were pumped into the portable tanks. Further excavation of the pipeline revealed numerous holes of various diameters along the length. Welded patches were identified on the second section of pipe removed. Actual pipeline depth was 10′.

2.2.4 Unidentified Pipe Line. An additional 12″ pipeline was encountered during the excavation that was not identified on the available site drawings. This pipeline was located approximately 2′ below the existing 12″ sludge line. A former Public Works employee identified the pipeline as an abandoned 12″ sludge line that connects to the sludge pits at SWMU 8. The pipeline posed no interference problems and was left in place.

2.2.5 Underground Interferences Sheet piling and construction timbers were encountered below the surface for the majority of the excavation. Several of the sheets and timbers were removed to facilitate the installation of construction trench boxes and pipe removal.

2.2.6 Groundwater. The above described interference may have restricted groundwater flow, making it difficult to determine the true groundwater level at the site. Approximately 10,430 gallons of oily water were pumped from the trench during the excavation.

2.3 PLAN MODIFICATIONS AND JUSTIFICATION. The IM work plan specified removal of a 12″ sludge line that was reportedly directly atop the 18″ line. The excavation revealed that the plan was in error and the 12″ line was approximately 3′ to the side of the 18″ line and therefore not an interference for pipe removal. The DET was directed to leave the 12″ line in place unless there were apparent signs of corrosion or leakage. Since neither was observed during the course of excavation, the sludge line was left in place.

The total volume of excavated soil was considerably less than originally planned due to the 10′ depth of the pipeline.

3. INTERIM MEASURE OUTCOME

3.1 SITE CONDITIONS FOLLOWING COMPLETION OF WORK. Following completion of all site work on 3 February 1997, the DET had removed 450 cubic yards of petroleum contaminated soil, 229′ of 18″ pipeline, installed 200′ of product recovery system, and repaired the sewer manhole. The site was graded to existing conditions and seeded with grass. Site photographs are included in Appendix C.

The DET will be responsible for the operation and maintenance of the product recovery system. This will include the collection and proper disposal of the product, required preventive maintenance, and repairs to ensure optimum system operation. The system is expected to be operated bimonthly, unless product recovery indicates more or less pumping is required.

The initial pumping operation was conducted on 11 March 1997 and yielded approximately 300 gallons of free product.

4. SAMPLING

4.1 SAMPLING EVOLUTIONS AND RESULTS. Since the intent of this IM was to remove the source of contamination without specific cleanup criteria, screening and confirmatory samples were not taken. Investigative samples were taken from the bottom of the trench after pipe removal and tested in accordance with SCDHEC requirements for unknown used oil. Based on these sample results, the contaminated soil was determined to be non-hazardous and will be bioremediated or disposed of accordingly. The soil is presently being stored in Bldg 1601. See Appendix B for sampling data and documentation.

Asbestos sampling results of the pipeline insulation identified the material as friable Asbestos Containing Material (ACM).

5. WASTE GENERATION

5.1 HAZARDOUS/POTENTIALLY HAZARDOUS WASTE. Asbestos insulation was disposed of in accordance SCDHEC regulations.

5.2 NON-HAZARDOUS WASTE.

5.2.1 Non-Hazardous Excavated Soil. Approximately 450 cubic yards of non-hazardous excavated soil was transported to Bldg 1601 for storage. Bioremediation of the soil would allow for potential reuse and would be the preferred method of disposal.

5.2.2 Pipeline. The pipeline was disposed of as construction debris after complete removal of asbestos.

APPENDIX A

SITE MAPS

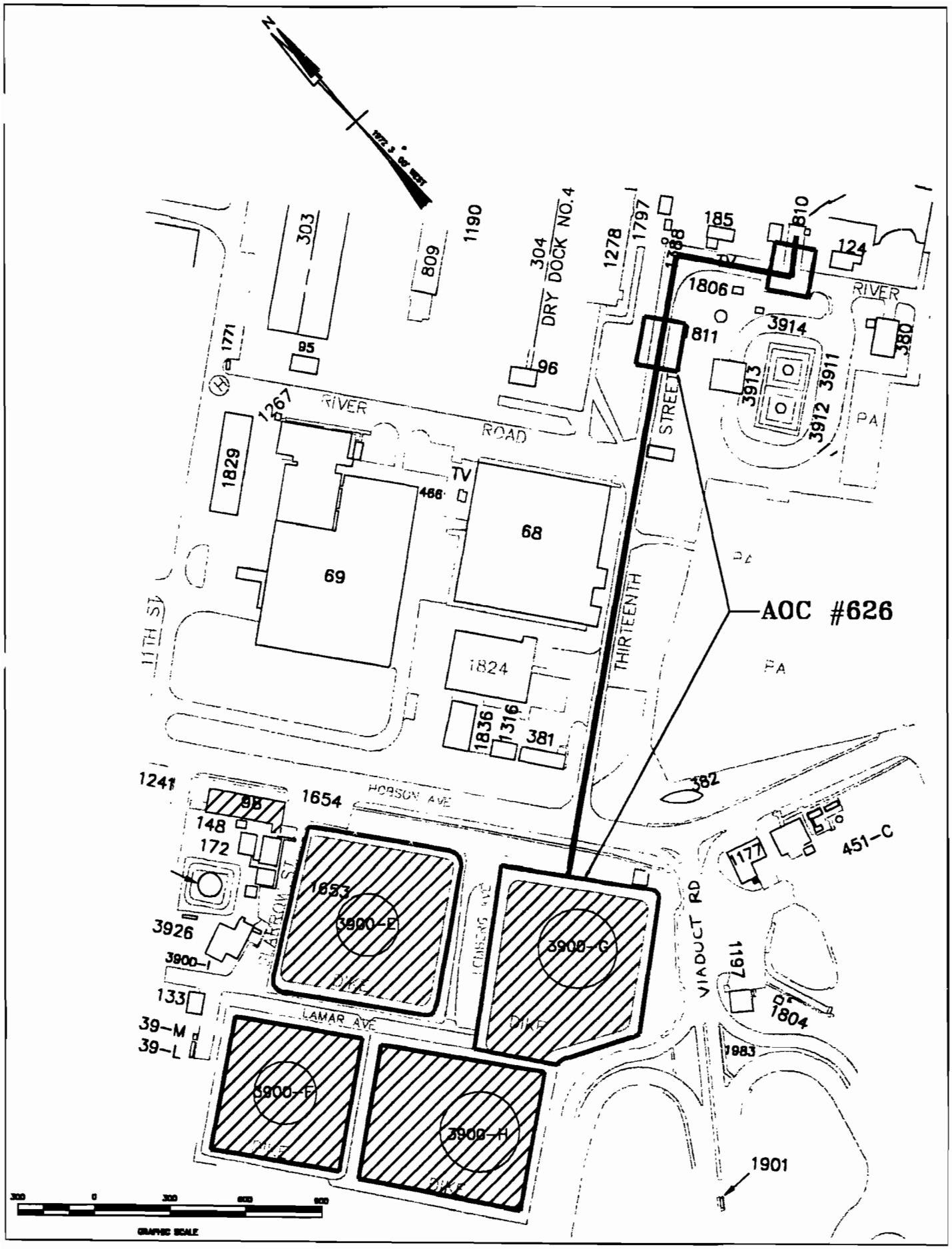

AOC #626
RIVER ROAD
DRY DOCK NO.4
THIRTEENTH STREET
11TH ST
HOBSON AVE
LAMAR AVE
VIADUCT RD
DIKE
3900-E
3900-G
3900-F
3900-H
1653
1654
1824
1829
1806
1811
1901
1804
1197
1177
1983
1241
3926
3900-I
133
39-M
39-L
148
172
98
381
1836
1316
1278
1797
1388
185
810
124
380
3914
3913
3912
3911
1190
809
303
95
96
1771
1267
466
68
69
382
451-C
PA
TV
GRAPHIC SCALE

MAP #1

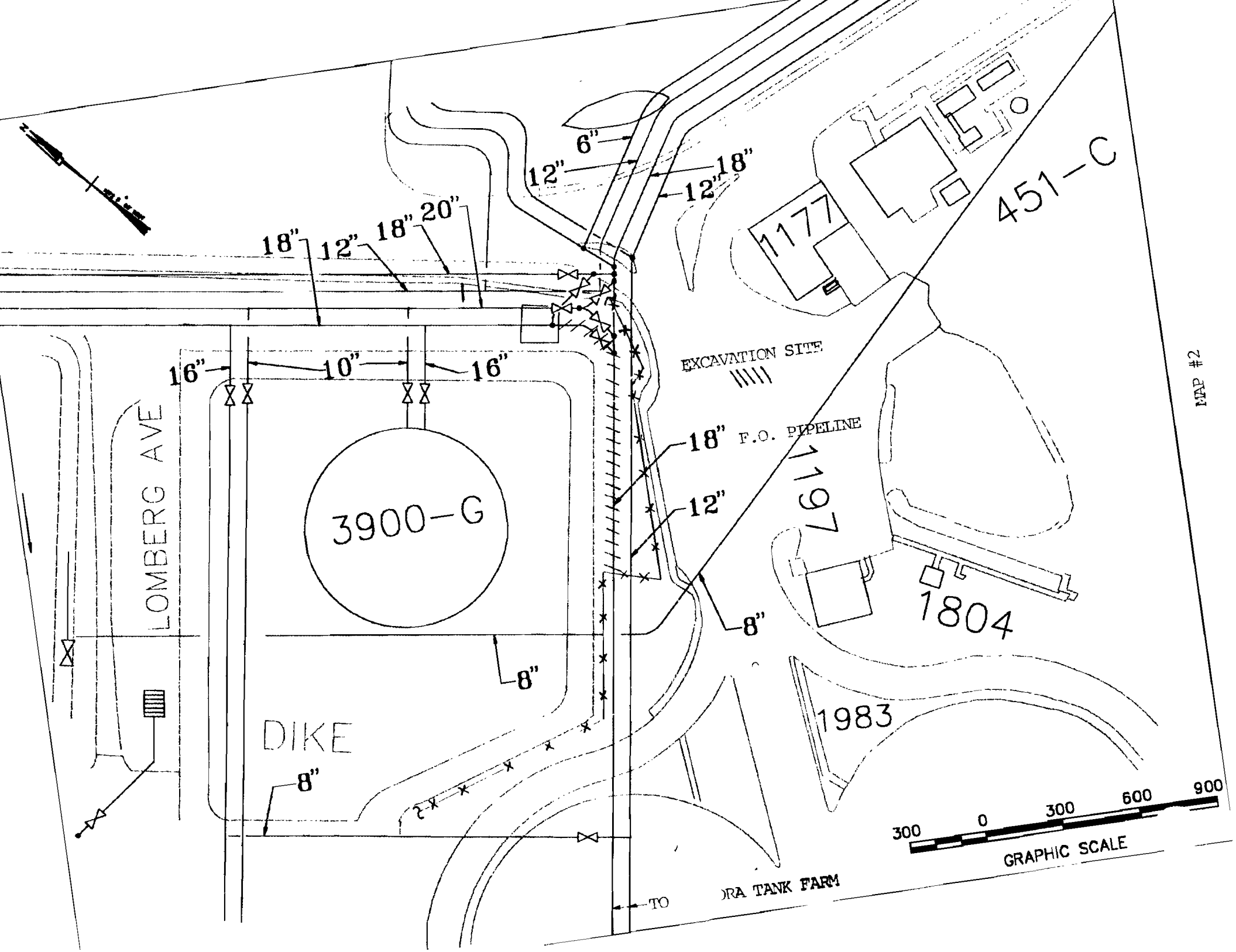
MAP #2
451-C
1177
1197
1804
1983
3900-G
LOMBERG AVE
DIKE
EXCAVATION SITE
F.O. PIPELINE
TO
DRA TANK FARM
6"
12"
18"
12"
18"
12"
18"
20"
16"
10"
16"
18"
12"
8"
8"
8"
300
0
300
600
900
GRAPHIC SCALE

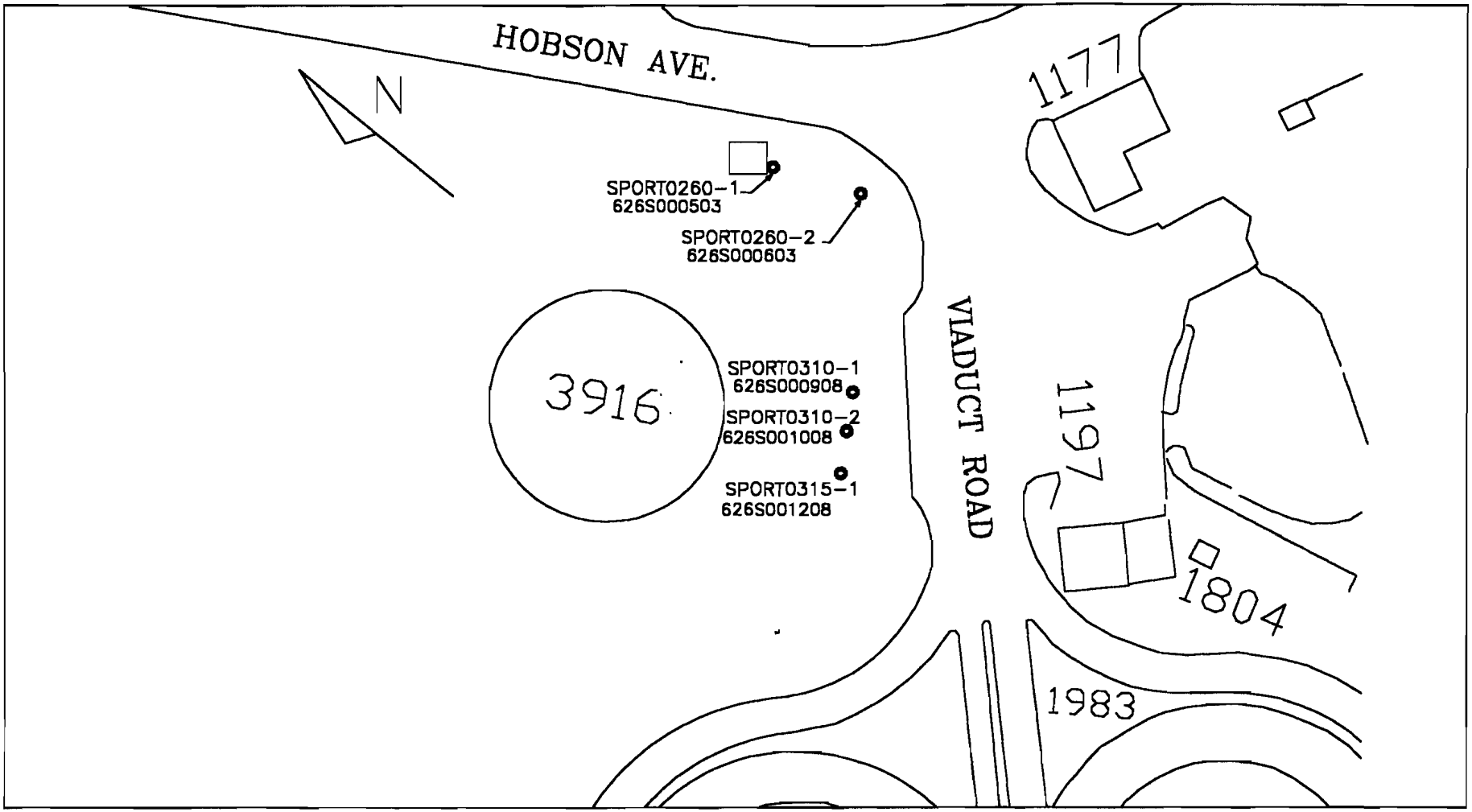

LEGEND

● Soil Sample Location

GRAPHIC SCALE

0' 100' 200'

SPORTENVDETCHASN
1899 North Hobson Ave.
North Charleston, SC
29405-2106

SITE/SAMPLE LOCATION PLAN
FUEL FARM AT VIADUCT ROAD
CHARLESTON NAVAL COMPLEX

SIZE	DRAWN BY:	DWG NO.	REV
A	T.GUNTER	AOC626-001	—
SCALE		SHEET 1	

MAP #3

APPENDIX B

SAMPLING DOCUMENTATION

TABLE 1

SAMPLE RESULTS OR DETECTION LIMITS GREATER THAN RESIDENTIAL RBC					
PARAMETER	**SPORT0260-1 NBCG626S000503**	**SPORT0260-2 NBCG626S000603**	**SPORT0310-1 NBCG626S000908**	**SPORT0310-2 NBCG626S001008**	**SPORT0315-1 NBCG626S001208**
	mg/kg	mg/kg	mg/kg	mg/kg	mg/kg
Benzo(a)anthracene	DL 6.660	DL 6.660			3.57
Benzo(a)pyrene	DL 6.660	DL 6.660	DL 0.164	DL 0.165	2.86
Benzo(a)fluoranthene	DL 6.660	DL 6.660			3.67
Dibenze(a,h)anthracene	DL 6.660	DL 6.660	DL 0.164	DL 0.165	DL 6.662
Indeno(1,2,3-c,d)pyrene	DL 6.660	DL 6.660			1.54
TPH	8260	7520	150	120	30
United States Environmental Protection Agency Region III Risk Based Concentration Table Criteria:					
		mg/kg			
	Benzo(a)anthracene	0.88			
	Benzo(a)pyrene	0.088			
	Benzo(a)fluoranthene	0.88			
	Dibenze(a,h)anthracene	0.088			
	Indeno(1,2,3-c,d)pyrene	0.88			

GENERAL ENGINEERING LABORATORIES

Meeting today's needs with a vision for tomorrow.

Laboratory Certifications

STATE	GEL	EPI
FL	E87156/87294	E87472/87
NC	233	
SC	10120	10582
TN	02934	02934

Client: Supervisor of Ship Building & Conversion
SUPSHIP-Portsmouth Detachment-Env.
1899 North Hobson Ave.
North Charleston, South Carolina 29405-2106

Contact: Mr. Bill Hiers

Project Description: SUPSHIP-Portsmouth Detachment

cc: NPWC00196 Report Date: December 16, 1996

Sample ID	: SPORT0260-1
Lab ID	: 9612094-01
Matrix	: Soil
Date Collected	: 12/04/96
Date Received	: 12/04/96
Priority	: Routine
Collector	: Client

Parameter	Qualifier	Result	DL	RL	Units	DF	Analyst	Date	Time	Batch	M
Volatile Organics											
BTEX - 4 items											
Benzene	U	0.00	10000	20000	ug/kg	10000	JGS2	12/06/96	1156	94538	1
Ethylbenzene	U	0.00	10000	20000	ug/kg	10000					
Toluene	U	0.00	10000	20000	ug/kg	10000					
Xylenes (TOTAL)	U	0.00	10000	20000	ug/kg	10000					
Naphthalene	U	0.00	10000	20000	ug/kg	10000					
Extractable Organics											
Polynuclear Aromatic Hydrocarbons - 16 items											
Acenaphthene	U	0.00	6660	13300	ug/kg	40.	BDG	12/11/96	2033	94528	2
Acenaphthylene	U	0.00	6660	13300	ug/kg	40.					
Anthracene	U	0.00	6660	13300	ug/kg	40.					
Benzo(a)anthracene	U	0.00	6660	13300	ug/kg	40.					
Benzo(a)pyrene	U	0.00	6660	13300	ug/kg	40.					
Benzo(b)fluoranthene	U	0.00	6660	13300	ug/kg	40.					
Benzo(ghi)perylene	U	0.00	6660	13300	ug/kg	40.					
Benzo(k)fluoranthene	U	0.00	6660	13300	ug/kg	40.					
Chrysene	U	0.00	6660	13300	ug/kg	40.					
Dibenzo(a,h)anthracene	U	0.00	6660	13300	ug/kg	40.					
Fluoranthene	U	0.00	6660	13300	ug/kg	40.					
Fluorene	U	6660	6660	13300	ug/kg	40.					
Indeno(1,2,3-c,d)pyrene	U	0.00	6660	13300	ug/kg	40.					
Naphthalene	U	0.00	6660	13300	ug/kg	40.					
Phenanthrene	J	12800	6660	13300	ug/kg	40.					
Pyrene	U	0.00	6660	13300	ug/kg	40.					
Metals Analysis											
Mercury		0.223	0.00241	0.200	mg/kg	1.0	RMJ	12/11/96	1303	94693	N
Silver	U	36.1	42.4	1000	ug/kg	2.0	NRM	12/11/96	1640	94627	
Arsenic		5580	276	1000	ug/kg	2.0					

GENERAL ENGINEERING LABORATORIES

Meeting today's needs with a vision for tomorrow

Laboratory Certifications

STATE	GEL	EPI
FL	E87156/87294	E87472/87
NC	233	
SC	10120	10582
TN	02934	02934

Client: Supervisor of Ship Building & Conversion
SUPSHIP-Portsmouth Detachment-Env.
1899 North Hobson Ave.
North Charleston, South Carolina 29405-2106
Contact: Mr. Bill Hiers
Project Description: SUPSHIP-Portsmouth Detachment

cc: NPWC00196 Report Date: December 16, 1996

Sample ID : SPORT0260-1

Parameter	Qualifier	Result	DL	RL	Units	DF	Analyst	Date	Time	Batch	M
Barium		23700	24.7	1000	ug/kg	2.0					
Cadmium	U	14.6	20.9	500	ug/kg	2.0	NRM	12/11/96	1640	94627	3
Chromium		15400	62.1	1000	ug/kg	2.0					
Lead		35000	136	500	ug/kg	2.0					
Selenium	J	231	228	500	ug/kg	2.0					
General Chemistry											
Total Rec. Petro. Hydrocarbons		8260	10.0	50.0	mg/kg	1.0	SLR	12/05/96	1030	94537	4

The following prep procedures were performed:

GC/MS Base/Neutral Compounds	MS	12/09/96	1200	94528	5
Mercury	CRB	12/10/96	1340	94693	6
TRACE	CRB	12/09/96	1830	94627	7

Comments:

A dilution was required for Volatile Organics due to a high concentration of hydrocarbons. A dilution was required for Extractable Organics due to matrix interference.

As a result, the detection limits are elevated.

Surrogate Recovery	Test	Percent%	Acceptable Limits
2-Fluorobiphenyl	M610	0.00*	(30.0 - 115.)
Nitrobenzene-d5	M610	0.00*	(23.0 - 120.)
p-Terphenyl-d14	M610	0.00*	(37.3 - 128.)
Bromofluorobenzene	BTEX-8260	87.0	(59.7 - 159.)
Dibromofluoromethane	BTEX-8260	86.1	(74.0 - 128.)
Toluene-d8	BTEX-8260	85.1	(53.4 - 163.)
Bromofluorobenzene	NAP-8260	87.0	(59.7 - 159.)
Dibromofluoromethane	NAP-8260	86.1	(74.0 - 128.)
Toluene-d8	NAP-8260	85.1	(53.4 - 163.)

PO Box 30712 • Charleston, SC 29417 • 2040 Savage Road • 29407

(803) 556-8171 • Fax (803) 766-1178

9612094-01

Printed on recycled paper

GENERAL ENGINEERING LABORATORIES

Meeting today's needs with a vision for tomorrow

Laboratory Certifications

STATE	GEL	EPI
FL	E87156/87294	E87472/
NC	233	
SC	10120	10582
TN	02934	02934

Client: Supervisor of Ship Building & Conversion
SUPSHIP-Portsmouth Detachment-Env.
1899 North Hobson Ave.
North Charleston, South Carolina 29405-2106

Contact: Mr. Bill Hiers

Project Description: SUPSHIP-Portsmouth Detachment

cc: NPWC00196 Report Date: December 16, 1996

Sample ID : SPORT0260-1

M = Method	Method-Description
M 1	EPA 8260
M 2	EPA 8270
M 3	EPA 6010A
M 4	EPA 9071
M 5	EPA 3550
M 6	EPA 7471
M 7	EPA 3050

Notes:
The qualifiers in this report are defined as follows:
ND indicates that the analyte was not detected at a concentration greater than the detection limit.
J indicates presence of analyte at a concentration less than the reporting limit (RL) and greater than the detection limit (DL).
U indicates that the analyte was not detected at a concentration greater than the detection limit.
* indicates that a quality control analyte recovery is outside of specified acceptance criteria.

This data report has been prepared and reviewed
in accordance with General Engineering Laboratories
standard operating procedures. Please direct
any questions to your Project Manager, Karen Blakeney at (803) 769-7386.

Karen Blakeney
Reviewed By

PO Box 30712 • Charleston, SC 29417 • 2040 Savage Road • 29407

(803) 556-8171 • Fax (803) 766-1178

9612094-01

Printed on recycled paper

GENERAL ENGINEERING LABORATORIES

Meeting today's needs with a vision for tomorrow.

Laboratory Certifications

STATE	GEL	EPI
FL	E87156/87294	E87472/874
NC	233	
SC	10120	10582
TN	02934	02934

Client: Supervisor of Ship Building & Conversion
SUPSHIP-Portsmouth Detachment-Env.
1899 North Hobson Ave.
North Charleston, South Carolina 29405-2106

Contact: Mr. Bill Hiers

Project Description: SUPSHIP-Portsmouth Detachment

cc: NPWC00196 Report Date: December 16, 1996

Sample ID	: SPORT0260-2
Lab ID	: 9612094-02
Matrix	: Soil
Date Collected	: 12/04/96
Date Received	: 12/04/96
Priority	: Routine
Collector	: Client

Parameter	Qualifier	Result	DL	RL	Units	DF	Analyst	Date	Time	Batch	M
Volatile Organics											
BTEX - 4 items											
Benzene	U	0.00	10000	20000	ug/kg	10000	JGS2	12/06/96	1232	94538	1
Ethylbenzene	U	0.00	10000	20000	ug/kg	10000					
Toluene	U	0.00	10000	20000	ug/kg	10000					
Xylenes (TOTAL)	U	0.00	10000	20000	ug/kg	10000					
Naphthalene	J	17600	10000	20000	ug/kg	10000					
Extractable Organics											
Polynuclear Aromatic Hydrocarbons - 16 items											
Acenaphthene	J	7860	6660	13300	ug/kg	40.	BDG	12/11/96	2105	94528	2
Acenaphthylene	U	0.00	6660	13300	ug/kg	40.					
Anthracene	U	0.00	6660	13300	ug/kg	40.					
Benzo(a)anthracene	U	0.00	6660	13300	ug/kg	40.					
Benzo(a)pyrene	U	0.00	6660	13300	ug/kg	40.					
Benzo(b)fluoranthene	U	0.00	6660	13300	ug/kg	40.					
Benzo(ghi)perylene	U	0.00	6660	13300	ug/kg	40.					
Benzo(k)fluoranthene	U	0.00	6660	13300	ug/kg	40.					
Chrysene	U	0.00	6660	13300	ug/kg	40.					
Dibenzo(a,h)anthracene	U	0.00	6660	13300	ug/kg	40.					
Fluoranthene	J	7860	6660	13300	ug/kg	40.					
Fluorene	J	8790	6660	13300	ug/kg	40.					
Indeno(1,2,3-c,d)pyrene	U	0.00	6660	13300	ug/kg	40.					
Naphthalene	J	9190	6660	13300	ug/kg	40.					
Phenanthrene		20600	6660	13300	ug/kg	40.					
Pyrene	U	0.00	6660	13300	ug/kg	40.					
Metals Analysis											
Mercury	J	0.0784	0.00241	0.200	mg/kg	1.0	RMJ	12/11/96	1305	94693	N
Silver	J	47.8	42.0	990	ug/kg	2.0	NRM	12/11/96	1645	94627	[illegible]
Arsenic		4870	273	990	ug/kg	2.0					

GENERAL ENGINEERING LABORATORIES

Meeting today's needs with a vision for tomorrow.

Laboratory Certifications

STATE	GEL	EPI
FL	E87156/87294	E87472
NC	233	
SC	10120	10582
TN	02934	02934

Client: Supervisor of Ship Building & Conversion
SUPSHIP-Portsmouth Detachment-Env.
1899 North Hobson Ave.
North Charleston, South Carolina 29405-2106
Contact: Mr. Bill Hiers
Project Description: SUPSHIP-Portsmouth Detachment

cc: NPWC00196 Report Date: December 16, 1996

Sample ID : SPORT0260-2

Parameter	Qualifier	Result	DL	RL	Units	DF	Analyst	Date	Time	Batch	M
Barium		17800	24.5	990	ug/kg	2.0					
Cadmium	J	38.7	20.7	495	ug/kg	2.0	NRM	12/11/96	1645	94627	3
Chromium		15300	61.5	990	ug/kg	2.0					
Lead		48800	135	495	ug/kg	2.0					
Selenium	U	168	226	495	ug/kg	2.0					
General Chemistry											
Total Rec. Petro. Hydrocarbons		7520	10.0	50.0	mg/kg	1.0	SLR	12/05/96	1030	94537	

The following prep procedures were performed:

GC/MS Base/Neutral Compounds	MS	12/09/96	1200	94528	5
Mercury	CRB	12/10/96	1340	94693	6
TRACE	CRB	12/09/96	1830	94627	7

Comments:

A dilution was required for Volatile Organics due to a high concentration of hydrocarbons. A dilution was required for Extractable Organics due to matrix interference.

As a result, the detection limits are elevated.

Surrogate Recovery	Test	Percent%	Acceptable Limits
2-Fluorobiphenyl	M610	0.00*	(30.0 - 115.)
Nitrobenzene-d5	M610	0.00*	(23.0 - 120.)
p-Terphenyl-d14	M610	0.00*	(37.3 - 128.)
Bromofluorobenzene	BTEX-8260	96.4	(59.7 - 159.)
Dibromofluoromethane	BTEX-8260	93.7	(74.0 - 128.)
Toluene-d8	BTEX-8260	93.2	(53.4 - 163.)
Bromofluorobenzene	NAP-8260	96.4	(59.7 - 159.)
Dibromofluoromethane	NAP-8260	93.7	(74.0 - 128.)
Toluene-d8	NAP-8260	93.2	(53.4 - 163.)

PO Box 30712 • Charleston, SC 29417 • 2040 Savage Road • 29407

(803) 556-8171 • Fax (803) 766-1178

9612094-02

Printed on recycled paper

GENERAL ENGINEERING LABORATORIES

Meeting today's needs with a vision for tomorrow.

Laboratory Certifications

STATE	GEL	EPI
FL	E87156/87294	E87472/
NC	233	
SC	10120	10582
TN	02934	02934

Client: Supervisor of Ship Building & Conversion
SUPSHIP-Portsmouth Detachment-Env.
1899 North Hobson Ave.
North Charleston, South Carolina 29405-2106
Contact: Mr. Bill Hiers
Project Description: SUPSHIP-Portsmouth Detachment

cc: NPWC00196 Report Date: December 16, 1996

Sample ID : SPORT0260-2

M = Method	Method-Description
M 1	EPA 8260
M 2	EPA 8270
M 3	EPA 6010A
M 4	EPA 9071
M 5	EPA 3550
M 6	EPA 7471
M 7	EPA 3050

Notes:
The qualifiers in this report are defined as follows:
ND indicates that the analyte was not detected at a concentration greater than the detection limit.
J indicates presence of analyte at a concentration less than the reporting limit (RL) and greater than the detection limit (DL).
U indicates that the analyte was not detected at a concentration greater than the detection limit.
* indicates that a quality control analyte recovery is outside of specified acceptance criteria.

This data report has been prepared and reviewed
in accordance with General Engineering Laboratories
standard operating procedures. Please direct
any questions to your Project Manager, Karen Blakeney at (803) 769-7386.

Karen Blakeney
Reviewed By

PO Box 30712 • Charleston, SC 29417 • 2040 Savage Road • 29407

(803) 556-8171 • Fax (803) 766-1178

9612094-02

Printed on recycled paper

GENERAL ENGINEERING LABORATORIES

Meeting today's needs with a vision for tomorrow.

Laboratory Certifications

STATE	GEL	EPI
FL	E87156/87294	E87472/87
NC	233	
SC	10120	10582
TN	02934	02934

Client: Supervisor of Ship Building & Conversion
SUPSHIP-Portsmouth Detachment-Env.
1899 North Hobson Ave.
North Charleston, South Carolina 29405-2106
Contact: Mr. Bill Hiers
Project Description: SUPSHIP-Portsmouth Detachment

cc: NPWC00196 Report Date: December 16, 1996

Sample ID	: SPORT0260-3
Lab ID	: 9612094-03
Matrix	: GroundH2O
Date Collected	: 12/04/96
Date Received	: 12/04/96
Priority	: Routine
Collector	: Client

Parameter	Qualifier	Result	DL	RL	Units	DF	Analyst	Date	Time	Batch	M
Volatile Organics											
BTEX - 4 items											
Benzene	U	0.00	1.00	2.00	ug/l	1.0	RMB	12/10/96	2235	94743	1
Ethylbenzene	U	0.00	1.00	2.00	ug/l	1.0					
Toluene	U	0.00	1.00	2.00	ug/l	1.0					
Xylenes (TOTAL)	U	0.00	1.00	4.00	ug/l	1.0					
Naphthalene	U	0.00	1.00	2.00	ug/l	1.0					

Surrogate Recovery	Test	Percent%	Acceptable Limits
Bromofluorobenzene	BTEX-8260	108.	(80.0 - 128.)
Dibromofluoromethane	BTEX-8260	107.	(67.7 - 135.)
Toluene-d8	BTEX-8260	105.	(76.8 - 122.)
Bromofluorobenzene	NAP-8260	108.	(80.0 - 128.)
Dibromofluoromethane	NAP-8260	107.	(67.7 - 135.)
Toluene-d8	NAP-8260	105.	(76.8 - 122.)

M = Method	Method-Description
M 1	EPA 8260

PO Box 30712 • Charleston, SC 29417 • 2040 Savage Road • 29407

(803) 556-8171 • Fax (803) 766-1178

9612094-03

Printed on recycled paper

GENERAL ENGINEERING LABORATORIES

Meeting today's needs with a vision for tomorrow.

Laboratory Certifications

STATE	GEL	EPI
FL	E87156/87294	E87472/8
NC	233	
SC	10120	10582
TN	02934	02934

Client:	Supervisor of Ship Building & Conversion SUPSHIP-Portsmouth Detachment-Env. 1899 North Hobson Ave. North Charleston, South Carolina 29405-2106
Contact:	Mr. Bill Hiers
Project Description:	SUPSHIP-Portsmouth Detachment

cc: NPWC00196 Report Date: December 16, 1996

Sample ID : SPORT0260-3

M = Method	Method-Description

Notes:
The qualifiers in this report are defined as follows:
ND indicates that the analyte was not detected at a concentration greater than the detection limit.
J indicates presence of analyte at a concentration less than the reporting limit (RL) and greater than the detection limit (DL).
U indicates that the analyte was not detected at a concentration greater than the detection limit.
* indicates that a quality control analyte recovery is outside of specified acceptance criteria.

This data report has been prepared and reviewed in accordance with General Engineering Laboratories standard operating procedures. Please direct any questions to your Project Manager, Karen Blakeney at (803) 769-7386.

Karen Blakeney
Reviewed By

PO Box 30712 • Charleston, SC 29417 • 2040 Savage Road • 29407

(803) 556-8171 • Fax (803) 766-1178

9612094-03

Printed on recycled paper

GENERAL ENGINEERING LABORATORIES

Meeting today's needs with a vision for tomorrow.

Laboratory Certifications

STATE	GEL	EPI
FL	E87156/87294	E87472/874
NC	233	
SC	10120	10582
TN	02934	02934

Client: Supervisor of Ship Building & Conversion
SUPSHIP-Portsmouth Detachment-Env.
1899 North Hobson Ave.
North Charleston, South Carolina 29405-2106

Contact: Mr. Bill Hiers

Project Description: SUPSHIP-Portsmouth Detachment

cc: NPWC00196 Report Date: January 22, 1997

Sample ID	: SPORT0293-1
Lab ID	: 9701200-01
Matrix	: GroundH2O
Date Collected	: 01/13/97
Date Received	: 01/13/97
Priority	: Routine
Collector	: Client

Parameter	Qualifier	Result	DL	RL	Units	DF	Analyst	Date	Time	Batch	M
Volatile Organics											
BTEX - 4 items											
Benzene	U	0.00	10.0	20.0	ug/l	10.	SHJ	01/20/97	1341	96539	1
Ethylbenzene	U	0.00	10.0	20.0	ug/l	10.					
Toluene	U	0.00	10.0	20.0	ug/l	10.					
Xylenes (TOTAL)		30.2	10.0	20.0	ug/l	10.					
Naphthalene	U	0.00	10.0	20.0	ug/l	10.					
Extractable Organics											
Polynuclear Aromatic Hydrocarbons - 16 items											
Acenaphthene	U	0.00	50.0	100	ug/l	10.	RLC	01/21/97	1254	96243	2
Acenaphthylene	U	0.00	50.0	100	ug/l	10.					
Anthracene	U	0.00	50.0	100	ug/l	10.					
Benzo(a)anthracene	U	0.00	50.0	100	ug/l	10.					
Benzo(a)pyrene	U	4.20	50.0	100	ug/l	10.					
Benzo(b)fluoranthene	U	6.20	50.0	100	ug/l	10.					
Benzo(ghi)perylene	U	0.00	50.0	100	ug/l	10.					
Benzo(k)fluoranthene	U	0.00	50.0	100	ug/l	10.					
Chrysene	U	0.00	50.0	100	ug/l	10.					
Dibenzo(a,h)anthracene	U	0.00	50.0	100	ug/l	10.					
Fluoranthene	U	34.0	50.0	100	ug/l	10.					
Fluorene	J	52.0	50.0	100	ug/l	10.					
Indeno(1,2,3-c,d)pyrene	U	9.80	50.0	100	ug/l	10.					
Naphthalene	U	0.00	50.0	100	ug/l	10.					
Phenanthrene		102	50.0	100	ug/l	10.					
Pyrene	U	25.0	50.0	100	ug/l	10.					
Metals Analysis											
Mercury	J	0.0290	0.0148	0.500	ug/l	1.0	RMJ	01/16/97	1545	96302	N
Silver	J	0.751	0.424	10.0	ug/l	1.0	NRM	01/16/97	1821	96287	3
Arsenic		14.3	2.76	10.0	ug/l	1.0					

PO Box 30712 • Charleston, SC 29417 • 2040 Savage Road • 29407

(803) 556-8171 • Fax (803) 766-1178

9701200-01

Printed on recycled paper

GENERAL ENGINEERING LABORATORIES

Meeting today's needs with a vision for tomorrow

Laboratory Certifications

STATE	GEL	EPI
FL	E87156/87294	E87472
NC	233	
SC	10120	10582
TN	02934	02934

Client: Supervisor of Ship Building & Conversion
SUPSHIP-Portsmouth Detachment-Env.
1899 North Hobson Ave.
North Charleston, South Carolina 29405-2106
Contact: Mr. Bill Hiers
Project Description: SUPSHIP-Portsmouth Detachment

cc: NPWC00196 Report Date: January 22, 1997

Sample ID : SPORT0293-1

Parameter	Qualifier	Result	DL	RL	Units	DF	Analyst	Date	Time	Batch	M
Barium		154	0.247	10.0	ug/l	1.0					
Cadmium	J	0.315	0.209	5.00	ug/l	1.0	NRM	01/16/97	1821	96287	3
Chromium	J	6.05	0.621	10.0	ug/l	1.0					
Lead		18.8	1.36	5.00	ug/l	1.0					
Selenium	J	3.12	2.28	5.00	ug/l	1.0					
General Chemistry											
Total Rec. Petro. Hydrocarbons		22.5	2.00	2.00	mg/l	1.0	SLR	01/16/97	1100	96358	

The following prep procedures were performed:

GC/MS Base/Neutral Compounds	GWL	01/15/97	1600	96243	5
Mercury	RMJ	01/15/97	1700	96302	6
TRACE	FGD	01/15/97	1530	96287	7

Surrogate Recovery	Test	Percent%	Acceptable Limits
2-Fluorobiphenyl	M610	62.0	(43.0 - 108.)
Nitrobenzene-d5	M610	72.0	(35.0 - 111.)
p-Terphenyl-d14	M610	38.0	(33.0 - 125.)
Bromofluorobenzene	BTEX-8260	75.4	(73.8 - 128.)
Dibromofluoromethane	BTEX-8260	82.2	(63.9 - 139.)
Toluene-d8	BTEX-8260	77.1	(77.1 - 121.)
Bromofluorobenzene	NAP-8260	75.4	(73.8 - 128.)
Dibromofluoromethane	NAP-8260	82.2	(63.9 - 139.)
Toluene-d8	NAP-8260	77.1	(77.1 - 121.)

M = Method	Method-Description
M 1	EPA 8260
M 2	EPA 8270
M 3	EPA 6010A
M 4	EPA 9070A
M 5	EPA 3510

PO Box 30712 • Charleston, SC 29417 • 2040 Savage Road • 29407

(803) 556-8171 • Fax (803) 766-1178

9701200-01

Printed on recycled paper

GENERAL ENGINEERING LABORATORIES

Meeting today's needs with a vision for tomorrow.

Laboratory Certifications

STATE	GEL	EPI
FL	E87156/87294	E87472/87
NC	233	
SC	10120	10582
TN	02934	02934

Client: Supervisor of Ship Building & Conversion
SUPSHIP-Portsmouth Detachment-Env.
1899 North Hobson Ave.
North Charleston, South Carolina 29405-2106

Contact: Mr. Bill Hiers

Project Description: SUPSHIP-Portsmouth Detachment

cc: NPWC00196 Report Date: January 22, 1997

Sample ID : SPORT0293-1

M = Method	Method-Description
M 6	EPA 7470
M 7	EPA 3005

Notes:
The qualifiers in this report are defined as follows:
ND indicates that the analyte was not detected at a concentration greater than the detection limit.
J indicates presence of analyte at a concentration less than the reporting limit (RL) and greater than the detection limit (DL).
J indicates that the analyte was not detected at a concentration greater than the detection limit.
* indicates that a quality control analyte recovery is outside of specified acceptance criteria.

This data report has been prepared and reviewed
in accordance with General Engineering Laboratories
standard operating procedures. Please direct
any questions to your Project Manager, Karen Blakeney at (803) 769-7386.

Karen Blakeney
Reviewed By

PO Box 30712 • Charleston, SC 29417 • 2040 Savage Road • 29407

(803) 556-8171 • Fax (803) 766-1178

9701200-01

Printed on recycled paper

GENERAL ENGINEERING LABORATORIES

Meeting today's needs with a vision for tomorrow.

Laboratory Certifications

STATE	GEL	EPI
FL	E87156/87294	E87472/87
NC	233	
SC	10120	10582
TN	02934	02934

Client: Supervisor of Ship Building & Conversion
SUPSHIP-Portsmouth Detachment-Env.
1899 North Hobson Ave.
North Charleston, South Carolina 29405-2106
Contact: Mr. Bill Hiers
Project Description: SUPSHIP-Portsmouth Detachment

cc: NPWC00196 Report Date: January 22, 1997

Sample ID	: SPORT0293-2
Lab ID	: 9701200-02
Matrix	: GroundH2O
Date Collected	: 01/13/97
Date Received	: 01/13/97
Priority	: Routine
Collector	: Client

Parameter	Qualifier	Result	DL	RL	Units	DF	Analyst	Date	Time	Batch	M
Volatile Organics											
BTEX - 4 items											
Benzene	U	0.00	10.0	20.0	ug/l	10.	SHJ	01/20/97	1412	96539	1
Ethylbenzene	U	0.00	10.0	20.0	ug/l	10.					
Toluene	U	0.00	10.0	20.0	ug/l	10.					
Xylenes (TOTAL)	U	0.00	10.0	20.0	ug/l	10.					
Naphthalene	U	0.00	10.0	20.0	ug/l	10.					

Surrogate Recovery	Test	Percent%	Acceptable Limits
Bromofluorobenzene	BTEX-8260	82.7	(73.8 - 128.)
Dibromofluoromethane	BTEX-8260	89.9	(63.9 - 139.)
Toluene-d8	BTEX-8260	82.3	(77.1 - 121.)
Bromofluorobenzene	NAP-8260	82.7	(73.8 - 128.)
Dibromofluoromethane	NAP-8260	89.9	(63.9 - 139.)
Toluene-d8	NAP-8260	82.3	(77.1 - 121.)

M = Method	Method-Description
M 1	EPA 8260

PO Box 30712 • Charleston, SC 29417 • 2040 Savage Road • 29407

(803) 556-8171 • Fax (803) 766-1178

9701200-02

Printed on recycled paper

GENERAL ENGINEERING LABORATORIES

Meeting today's needs with a vision for tomorrow.

Laboratory Certifications

STATE	GEL	EPI
FL	E87156/87294	E87472/874
NC	233	
SC	10120	10582
TN	02934	02934

Client: Supervisor of Ship Building & Conversion
SUPSHIP-Portsmouth Detachment-Env.
1899 North Hobson Ave.
North Charleston, South Carolina 29405-2106

Contact: Mr. Bill Hiers

Project Description: SUPSHIP-Portsmouth Detachment

cc: NPWC00196 Report Date: January 22, 1997

Sample ID : SPORT0293-2

M = Method	Method-Description

Notes:
The qualifiers in this report are defined as follows:
ND indicates that the analyte was not detected at a concentration greater than the detection limit.
J indicates presence of analyte at a concentration less than the reporting limit (RL) and greater than the detection limit (DL).
U indicates that the analyte was not detected at a concentration greater than the detection limit.
* indicates that a quality control analyte recovery is outside of specified acceptance criteria.

This data report has been prepared and reviewed in accordance with General Engineering Laboratories standard operating procedures. Please direct any questions to your Project Manager, Karen Blakeney at (803) 769-7386.

Karen Blakeney
Reviewed By

PO Box 30712 • Charleston, SC 29417 • 2040 Savage Road • 29407

(803) 556-8171 • Fax (803) 766-1178

9701200-02

Printed on recycled paper

GENERAL ENGINEERING LABORATORIES

Meeting today's needs with a vision for tomorrow.

Laboratory Certifications

STATE	GEL	EPI
FL	E87156/87294	E87472/87·
NC	233	
SC	10120	10582
TN	02934	02934

Client: Supervisor of Ship Building & Conversion
SUPSHIP-Portsmouth Detachment-Env.
1899 North Hobson Ave.
North Charleston, South Carolina 29405-2106
Contact: Mr. Bill Hiers
Project Description: SUPSHIP-Portsmouth Detachment

cc: NPWC00196 Report Date: January 29, 1997

Sample ID	: SPORT0310-1
Lab ID	: 9701340-01
Matrix	: Soil
Date Collected	: 01/17/97
Date Received	: 01/17/97
Priority	: Routine
Collector	: Client

Parameter	Qualifier	Result	DL	RL	Units	DF	Analyst	Date	Time	Batch	M
Volatile Organics											
BTEX - 4 items											
'enzene	U	0.00	100	200	ug/kg	100	JAC	01/27/97	1952	96984	1
ethylbenzene	U	72.0	100	200	ug/kg	100					
Toluene	U	0.00	100	200	ug/kg	100					
Xylenes (TOTAL)		405	100	200	ug/kg	100					
Naphthalene		1300	100	200	ug/kg	100					
Extractable Organics											
Polynuclear Aromatic Hydrocarbons - 16 items											
Acenaphthene	U	0.00	164	330	ug/kg	1.0	RLC	01/28/97	2023	96613	2
Acenaphthylene	U	0.00	164	330	ug/kg	1.0					
Anthracene	J	210	164	330	ug/kg	1.0					
Benzo(a)anthracene	U	91.8	164	330	ug/kg	1.0					
Benzo(a)pyrene	U	36.1	164	330	ug/kg	1.0					
Benzo(b)fluoranthene	U	62.3	164	330	ug/kg	1.0					
Benzo(ghi)perylene	U	0.00	164	330	ug/kg	1.0					
Benzo(k)fluoranthene	U	0.00	164	330	ug/kg	1.0					
Chrysene	U	112	164	330	ug/kg	1.0					
Dibenzo(a,h)anthracene	U	0.00	164	330	ug/kg	1.0					
Fluoranthene	J	312	164	330	ug/kg	1.0					
Fluorene	U	0.00	164	330	ug/kg	1.0					
Indeno(1,2,3-c,d)pyrene	U	36.1	164	330	ug/kg	1.0					
Naphthalene		1060	164	330	ug/kg	1.0					
Phenanthrene		1010	164	330	ug/kg	1.0					
Pyrene	J	187	164	330	ug/kg	1.0					
Metals Analysis											
Mercury	J	0.0789	0.00246	0.200	mg/kg	1.0	RMJ	01/23/97	1242	96504	N
ilver	U	-12.3	40.0	944	ug/kg	2.0	NRM	01/27/97	2118	96654	3
rsenic		6030	260	944	ug/kg	2.0					

GENERAL ENGINEERING LABORATORIES

Meeting today's needs with a vision for tomorrow.

Laboratory Certifications

STATE	GEL	EPI
FL	E87156/87294	E87472/874
NC	233	
SC	10120	10582
TN	02934	02934

Client: Supervisor of Ship Building & Conversion
SUPSHIP-Portsmouth Detachment-Env.
1899 North Hobson Ave.
North Charleston, South Carolina 29405-2106

Contact: Mr. Bill Hiers

Project Description: SUPSHIP-Portsmouth Detachment

cc: NPWC00196 Report Date: January 29, 1997

Sample ID : SPORT0310-1

Parameter	Qualifier	Result	DL	RL	Units	DF	Analyst	Date	Time	Batch	M
Barium		22200	23.3	944	ug/kg	2.0					
Cadmium	J	19.9	19.7	472	ug/kg	2.0	NRM	01/27/97	2118	96654	3
Chromium		15900	58.6	944	ug/kg	2.0					
Lead		18000	129	472	ug/kg	2.0					
Selenium	J	464	215	472	ug/kg	2.0					
General Chemistry											
Total Rec. Petro. Hydrocarbons		150	10.0	50.0	mg/kg	1.0	SLR	01/22/97	1200	96724	4

ıe following prep procedures were performed:

GC/MS Base/Neutral Compounds	MS	01/21/97	1400	96613	5
Mercury	RMJ	01/22/97	1600	96504	6
TRACE	CRB	01/22/97	1915	96654	7

Comments:

A dilution was required for Volatile Organics due to matrix interference.
As a result, the detection limits are elevated.

Surrogate Recovery	Test	Percent%	Acceptable Limits
2-Fluorobiphenyl	M610	51.8	(30.0 - 115.)
Nitrobenzene-d5	M610	61.2	(23.0 - 120.)
p-Terphenyl-d14	M610	38.0	(37.3 - 128.)
Bromofluorobenzene	BTEX-8260	95.4	(53.5 - 154.)
Dibromofluoromethane	BTEX-8260	73.1	(63.4 - 136.)
Toluene-d8	BTEX-8260	89.3	(72.1 - 137.)
Bromofluorobenzene	NAP-8260	95.4	(53.5 - 154.)
Dibromofluoromethane	NAP-8260	73.1	(63.4 - 136.)
Toluene-d8	NAP-8260	89.3	(72.1 - 137.)

PO Box 30712 • Charleston, SC 29417 • 2040 Savage Road • 29407

(803) 556-8171 • Fax (803) 766-1178

9701340-01

Printed on recycled paper

GENERAL ENGINEERING LABORATORIES

Meeting today's needs with a vision for tomorrow.

Laboratory Certifications

STATE	GEL	EPI
FL	E87156/87294	E87472/87
NC	233	
SC	10120	10582
TN	02934	02934

Client: Supervisor of Ship Building & Conversion
SUPSHIP-Portsmouth Detachment-Env.
1899 North Hobson Ave.
North Charleston, South Carolina 29405-2106

Contact: Mr. Bill Hiers

Project Description: SUPSHIP-Portsmouth Detachment

cc: NPWC00196 Report Date: January 29, 1997

Sample ID : SPORT0310-1

M = Method	Method-Description
M 1	EPA 8260
M 2	EPA 8270
M 3	EPA 6010A
M 4	EPA 9071
M 5	EPA 3550
M 6	EPA 7471
M 7	EPA 3050

Notes:
The qualifiers in this report are defined as follows:
ND indicates that the analyte was not detected at a concentration greater than the detection limit.
J indicates presence of analyte at a concentration less than the reporting limit (RL) and greater than the detection limit (DL).
U indicates that the analyte was not detected at a concentration greater than the detection limit.
* indicates that a quality control analyte recovery is outside of specified acceptance criteria.

This data report has been prepared and reviewed in accordance with General Engineering Laboratories standard operating procedures. Please direct any questions to your Project Manager, Karen Blakeney at (803) 769-7386.

Karen Blakeney
Reviewed By

PO Box 30712 • Charleston, SC 29417 • 2040 Savage Road • 29407

(803) 556-8171 • Fax (803) 766-1178

9701340-01

Printed on recycled paper

GENERAL ENGINEERING LABORATORIES

Meeting today's needs with a vision for tomorrow.

Laboratory Certifications

STATE	GEL	EPI
FL	E87156/87294	E87472/874
NC	233	
SC	10120	10582
TN	02934	02934

Client: Supervisor of Ship Building & Conversion
SUPSHIP-Portsmouth Detachment-Env.
1899 North Hobson Ave.
North Charleston, South Carolina 29405-2106

Contact: Mr. Bill Hiers

Project Description: SUPSHIP-Portsmouth Detachment

cc: NPWC00196

Report Date: January 29, 1997

Sample ID	: SPORT0310-2
Lab ID	: 9701340-02
Matrix	: Soil
Date Collected	: 01/17/97
Date Received	: 01/17/97
Priority	: Routine
Collector	: Client

Parameter	Qualifier	Result	DL	RL	Units	DF	Analyst	Date	Time	Batch	M
Volatile Organics											
BTEX - 4 items											
lenzene	U	0.00	10.0	20.0	ug/kg	10.	JAC	01/28/97	0953	96984	1
Ethylbenzene	J	16.7	10.0	20.0	ug/kg	10.					
Toluene	U	0.00	10.0	20.0	ug/kg	10.					
Xylenes (TOTAL)		42.2	10.0	20.0	ug/kg	10.					
Naphthalene	U	0.00	10.0	20.0	ug/kg	10.					
Extractable Organics											
Polynuclear Aromatic Hydrocarbons - 16 items											
Acenaphthene	U	0.00	165	330	ug/kg	1.0	RLC	01/28/97	2056	96613	2
Acenaphthylene	U	0.00	165	330	ug/kg	1.0					
Anthracene	U	0.00	165	330	ug/kg	1.0					
Benzo(a)anthracene	U	0.00	165	330	ug/kg	1.0					
Benzo(a)pyrene	U	0.00	165	330	ug/kg	1.0					
Benzo(b)fluoranthene	U	0.00	165	330	ug/kg	1.0					
Benzo(ghi)perylene	U	0.00	165	330	ug/kg	1.0					
Benzo(k)fluoranthene	U	0.00	165	330	ug/kg	1.0					
Chrysene	U	0.00	165	330	ug/kg	1.0					
Dibenzo(a,h)anthracene	U	0.00	165	330	ug/kg	1.0					
Fluoranthene	U	0.00	165	330	ug/kg	1.0					
Fluorene	U	0.00	165	330	ug/kg	1.0					
Indeno(1,2,3-c,d)pyrene	U	0.00	165	330	ug/kg	1.0					
Naphthalene	U	0.00	165	330	ug/kg	1.0					
Phenanthrene	U	0.00	165	330	ug/kg	1.0					
Pyrene	U	0.00	165	330	ug/kg	1.0					
Metals Analysis											
Mercury	J	0.0302	0.00246	0.200	mg/kg	1.0	RMJ	01/23/97	1245	96504	N
Silver	U	10.2	42.0	990	ug/kg	2.0	NRM	01/27/97	2123	96654	3
rsenic		7240	273	990	ug/kg	2.0					

GENERAL ENGINEERING LABORATORIES

Meeting today's needs with a vision for tomorrow.

Laboratory Certifications

STATE	GEL	EPI
FL	E87156/87294	E87472/874
NC	233	
SC	10120	10582
TN	02934	02934

Client: Supervisor of Ship Building & Conversion
SUPSHIP-Portsmouth Detachment-Env.
1899 North Hobson Ave.
North Charleston, South Carolina 29405-2106
Contact: Mr. Bill Hiers
Project Description: SUPSHIP-Portsmouth Detachment

cc: NPWC00196 Report Date: January 29, 1997

Sample ID : SPORT0310-2

Parameter	Qualifier	Result	DL	RL	Units	DF	Analyst	Date	Time	Batch	M
Barium		17300	24.5	990	ug/kg	2.0					
Cadmium	J	28.9	20.7	495	ug/kg	2.0	NRM	01/27/97	2123	96654	3
Chromium		19500	61.5	990	ug/kg	2.0					
Lead		17000	135	495	ug/kg	2.0					
Selenium	J	463	226	495	ug/kg	2.0					
General Chemistry											
Total Rec. Petro. Hydrocarbons		120	10.0	50.0	mg/kg	1.0	SLR	01/22/97	1200	96724	4

The following prep procedures were performed:

GC/MS Base/Neutral Compounds	MS	01/21/97	1400	96613	5
Mercury	RMJ	01/22/97	1600	96504	6
TRACE	CRB	01/22/97	1915	96654	7

Surrogate Recovery	Test	Percent%	Acceptable Limits
2-Fluorobiphenyl	M610	93.7	(30.0 - 115.)
Nitrobenzene-d5	M610	109.	(23.0 - 120.)
p-Terphenyl-d14	M610	78.8	(37.3 - 128.)
Bromofluorobenzene	BTEX-8260	124.	(53.5 - 154.)
Dibromofluoromethane	BTEX-8260	79.5	(63.4 - 136.)
Toluene-d8	BTEX-8260	107.	(72.1 - 137.)
Bromofluorobenzene	NAP-8260	124.	(53.5 - 154.)
Dibromofluoromethane	NAP-8260	79.5	(63.4 - 136.)
Toluene-d8	NAP-8260	107.	(72.1 - 137.)

M = Method	Method-Description
M 1	EPA 8260
M 2	EPA 8270
M 3	EPA 6010A
M 4	EPA 9071
M 5	EPA 3550

PO Box 30712 • Charleston, SC 29417 • 2040 Savage Road • 29407

(803) 556-8171 • Fax (803) 766-1178

9701340-02

Printed on recycled paper.

GENERAL ENGINEERING LABORATORIES

Meeting today's needs with a vision for tomorrow.

Laboratory Certifications

STATE	GEL	EPI
FL	E87156/87294	E87472/874
NC	233	
SC	10120	10582
TN	02934	02934

Client:	Supervisor of Ship Building & Conversion SUPSHIP-Portsmouth Detachment-Env. 1899 North Hobson Ave. North Charleston, South Carolina 29405-2106
Contact:	Mr. Bill Hiers
Project Description:	SUPSHIP-Portsmouth Detachment

cc: NPWC00196 Report Date: January 29, 1997

Sample ID : SPORT0310-2

M = Method	Method-Description
M 6	EPA 7471
M 7	EPA 3050

Notes:
The qualifiers in this report are defined as follows:
ND indicates that the analyte was not detected at a concentration greater than the detection limit.
I indicates presence of analyte at a concentration less than the reporting limit (RL) and greater than the detection limit (DL).
ndicates that the analyte was not detected at a concentration greater than the detection limit.
ndicates that a quality control analyte recovery is outside of specified acceptance criteria.

This data report has been prepared and reviewed
in accordance with General Engineering Laboratories
standard operating procedures. Please direct
any questions to your Project Manager, Karen Blakeney at (803) 769-7386.

Karen Blakeney
Reviewed By

PO Box 30712 • Charleston, SC 29417 • 2040 Savage Road • 29407

(803) 556-8171 • Fax (803) 766-1178

9701340-02

Printed on recycled paper

GENERAL ENGINEERING LABORATORIES

Meeting today's needs with a vision for tomorrow.

Laboratory Certifications

STATE	GEL	EPI
FL	E87156/87294	E87472/8
NC	233	
SC	10120	10582
TN	02934	02934

Client: Supervisor of Ship Building & Conversion
SUPSHIP-Portsmouth Detachment-Env.
1899 North Hobson Ave.
North Charleston, South Carolina 29405-2106

Contact: Mr. Bill Hiers

Project Description: SUPSHIP-Portsmouth Detachment

cc: NPWC00196

Report Date: January 29, 1997

Sample ID	: SPORT0310-3
Lab ID	: 9701340-03
Matrix	: Soil
Date Collected	: 01/17/97
Date Received	: 01/17/97
Priority	: Routine
Collector	: Client

Parameter	Qualifier	Result	DL	RL	Units	DF	Analyst	Date	Time	Batch	M
Volatile Organics											
BTEX - 4 items											
Benzene	U	0.00	1.00	2.00	ug/kg	1.0	JAC	01/28/97	1027	96984	1
Ethylbenzene	U	0.00	1.00	2.00	ug/kg	1.0					
Toluene	U	0.00	1.00	2.00	ug/kg	1.0					
Xylenes (TOTAL)	U	0.00	1.00	4.00	ug/kg	1.0					
Naphthalene	U	0.00	1.00	2.00	ug/kg	1.0					

Surrogate Recovery	Test	Percent%	Acceptable Limits
Bromofluorobenzene	BTEX-8260	111.	(53.5 - 154.)
Dibromofluoromethane	BTEX-8260	74.0	(63.4 - 136.)
Toluene-d8	BTEX-8260	98.8	(72.1 - 137.)
Bromofluorobenzene	NAP-8260	111.	(53.5 - 154.)
Dibromofluoromethane	NAP-8260	74.0	(63.4 - 136.)
Toluene-d8	NAP-8260	98.8	(72.1 - 137.)

M = Method	Method-Description
M 1	EPA 8260

PO Box 30712 • Charleston, SC 29417 • 2040 Savage Road • 29407

(803) 556-8171 • Fax (803) 766-1178

9701340-03

Printed on recycled paper

GENERAL ENGINEERING LABORATORIES

Meeting today's needs with a vision for tomorrow.

Laboratory Certifications

STATE	GEL	EPI
FL	E87156/87294	E87472/87
NC	233	
SC	10120	10582
TN	02934	02934

Client: Supervisor of Ship Building & Conversion
SUPSHIP-Portsmouth Detachment-Env.
1899 North Hobson Ave.
North Charleston, South Carolina 29405-2106

Contact: Mr. Bill Hiers

Project Description: SUPSHIP-Portsmouth Detachment

cc: NPWC00196 Report Date: January 29, 1997

Sample ID : SPORT0310-3

M = Method	Method-Description

Notes:
The qualifiers in this report are defined as follows:
ND indicates that the analyte was not detected at a concentration greater than the detection limit.
J indicates presence of analyte at a concentration less than the reporting limit (RL) and greater than the detection limit (DL).
U indicates that the analyte was not detected at a concentration greater than the detection limit.
* indicates that a quality control analyte recovery is outside of specified acceptance criteria.

This data report has been prepared and reviewed in accordance with General Engineering Laboratories standard operating procedures. Please direct any questions to your Project Manager, Karen Blakeney at (803) 769-7386.

Karen Blakeney
Reviewed By

PO Box 30712 • Charleston, SC 29417 • 2040 Savage Road • 29407

(803) 556-8171 • Fax (803) 766-1178

9701340-03

Printed on recycled paper.

GENERAL ENGINEERING LABORATORIES

Meeting today's needs with a vision for tomorrow.

Laboratory Certifications

STATE	GEL	EPI
FL	E87156/87294	E87472/87[illegible]
NC	233	
SC	10120	10582
TN	02934	02934

Client: Supervisor of Ship Building & Conversion
SUPSHIP-Portsmouth Detachment-Env.
1899 North Hobson Ave.
North Charleston, South Carolina 29405-2106

Contact: Mr. Bill Hiers

Project Description: SUPSHIP-Portsmouth Detachment

cc: NPWC00196

Report Date: January 31, 1997

Sample ID	: SPORT0315-1
Lab ID	: 9701418-01
Matrix	: Soil
Date Collected	: 01/22/97
Date Received	: 01/22/97
Priority	: Routine
Collector	: Client

Parameter	Qualifier	Result	DL	RL	Units	DF	Analyst	Date	Time	Batch	M
Volatile Organics											
BTEX - 4 items											
Benzene	U	0.00	25.0	50.0	ug/kg	25.	JAC	01/30/97	1201	97025	1
Ethylbenzene	U	0.00	25.0	50.0	ug/kg	25.					
Toluene	U	0.00	25.0	50.0	ug/kg	25.					
Xylenes (TOTAL)	U	0.00	25.0	50.0	ug/kg	25.					
Naphthalene		490	25.0	50.0	ug/kg	25.					
Extractable Organics											
Polynuclear Aromatic Hydrocarbons - 16 items											
Acenaphthene		3560	662	1320	ug/kg	4.0	JCB	01/26/97	0017	96986	2
Acenaphthylene	U	0.00	662	1320	ug/kg	4.0					
Anthracene		3310	662	1320	ug/kg	4.0					
Benzo(a)anthracene		3670	662	1320	ug/kg	4.0					
Benzo(a)pyrene		2860	662	1320	ug/kg	4.0					
Benzo(b)fluoranthene		3570	662	1320	ug/kg	4.0					
Benzo(ghi)perylene	J	1230	662	1320	ug/kg	4.0					
Benzo(k)fluoranthene		1990	662	1320	ug/kg	4.0					
Chrysene		3570	662	1320	ug/kg	4.0					
Dibenzo(a,h)anthracene	U	0.00	662	1320	ug/kg	4.0					
Fluoranthene		9820	662	1320	ug/kg	4.0					
Fluorene		3320	662	1320	ug/kg	4.0					
Indeno(1,2,3-c,d)pyrene		1540	662	1320	ug/kg	4.0					
Naphthalene		2770	662	1320	ug/kg	4.0					
Phenanthrene		10800	662	1320	ug/kg	4.0					
Pyrene		10100	662	1320	ug/kg	4.0					
Metals Analysis											
Mercury	J	0.146	0.00234	0.200	mg/kg	1.0	RMJ	01/27/97	1623	96893	N
Silver	U	19.8	41.6	980	ug/kg	2.0	NRM	01/28/97	1757	96883	[illegible]
Arsenic		10200	270	980	ug/kg	2.0					

PO Box 30712 • Charleston, SC 29417 • 2040 Savage Road • 29407

(803) 556-8171 • Fax (803) 766-1178

9701418-01

Printed on recycled paper

GENERAL ENGINEERING LABORATORIES

Meeting today's needs with a vision for tomorrow.

Laboratory Certifications

STATE	GEL	EPI
FL	E87156/87294	E87472/874
NC	233	
SC	10120	10582
TN	02934	02934

Client: Supervisor of Ship Building & Conversion
SUPSHIP-Portsmouth Detachment-Env.
1899 North Hobson Ave.
North Charleston, South Carolina 29405-2106
Contact: Mr. Bill Hiers
Project Description: SUPSHIP-Portsmouth Detachment

cc: NPWC00196 Report Date: January 31, 1997

Sample ID : SPORT0315-1

Parameter	Qualifier	Result	DL	RL	Units	DF	Analyst	Date	Time	Batch	M
Barium		19500	24.2	980	ug/kg	2.0					
Cadmium	J	28.4	20.5	490	ug/kg	2.0	NRM	01/28/97	1757	96883	3
Chromium		25400	60.9	980	ug/kg	2.0					
Lead		22200	134	490	ug/kg	2.0					
Selenium	U	205	223	490	ug/kg	2.0					
General Chemistry											
Total Rec. Petro. Hydrocarbons	J	30.0	10.0	50.0	mg/kg	1.0	SLR	01/28/97	1100	96992	4

The following prep procedures were performed:

GC/MS Base/Neutral Compounds	MS	01/28/97	1530	96986	5
Mercury	CRB	01/24/97	1630	96893	6
TRACE	FGD	01/27/97	1800	96883	7

Surrogate Recovery	Test	Percent%	Acceptable Limits
2-Fluorobiphenyl	M610	102.	(30.0 - 115.)
Nitrobenzene-d5	M610	71.8	(23.0 - 120.)
p-Terphenyl-d14	M610	101.	(37.3 - 128.)
Bromofluorobenzene	BTEX-8260	99.2	(53.5 - 154.)
Dibromofluoromethane	BTEX-8260	108.	(63.4 - 136.)
Toluene-d8	BTEX-8260	113.	(72.1 - 137.)
Bromofluorobenzene	NAP-8260	99.2	(53.5 - 154.)
Dibromofluoromethane	NAP-8260	108.	(63.4 - 136.)
Toluene-d8	NAP-8260	113.	(72.1 - 137.)

M = Method	Method-Description
M 1	EPA 8260
M 2	EPA 8270
M 3	EPA 6010A
M 4	EPA 9071
M 5	EPA 3550

PO Box 30712 • Charleston, SC 29417 • 2040 Savage Road • 29407

(803) 556-8171 • Fax (803) 766-1178

9701418-01

Printed on recycled paper

GENERAL ENGINEERING LABORATORIES

Meeting today's needs with a vision for tomorrow.

Laboratory Certifications

STATE	GEL	EPI
FL	E87156/87294	E87472/87·
NC	233	
SC	10120	10582
TN	02934	02934

Client: Supervisor of Ship Building & Conversion
SUPSHIP-Portsmouth Detachment-Env.
1899 North Hobson Ave.
North Charleston, South Carolina 29405-2106

Contact: Mr. Bill Hiers

Project Description: SUPSHIP-Portsmouth Detachment

cc: NPWC00196 Report Date: January 31, 1997

Sample ID : SPORT0315-1

M = Method	Method-Description
M 6	EPA 7471
M 7	EPA 3050

Notes:
The qualifiers in this report are defined as follows:
ND indicates that the analyte was not detected at a concentration greater than the detection limit.
- indicates presence of analyte at a concentration less than the reporting limit (RL) and greater than the detection limit (DL).
ndicates that the analyte was not detected at a concentration greater than the detection limit.
indicates that a quality control analyte recovery is outside of specified acceptance criteria.

This data report has been prepared and reviewed
in accordance with General Engineering Laboratories
standard operating procedures. Please direct
any questions to your Project Manager, Karen Blakeney at (803) 769-7386.

Karen Blakeney
Reviewed By

PO Box 30712 • Charleston, SC 29417 • 2040 Savage Road • 29407

(803) 556-8171 • Fax (803) 766-1178

9701418-01

Printed on recycled paper

GENERAL ENGINEERING LABORATORIES

Meeting today's needs with a vision for tomorrow.

Laboratory Certifications

STATE	GEL	EPI
FL	E87156/87294	E87472/874
NC	233	
SC	10120	10582
TN	02934	02934

Client: Supervisor of Ship Building & Conversion
SUPSHIP-Portsmouth Detachment-Env.
1899 North Hobson Ave.
North Charleston, South Carolina 29405-2106
Contact: Mr. Bill Hiers
Project Description: SUPSHIP-Portsmouth Detachment

cc: NPWC00196 Report Date: January 31, 1997

Sample ID	: SPORT0315-2
Lab ID	: 9701418-02
Matrix	: Soil
Date Collected	: 01/22/97
Date Received	: 01/22/97
Priority	: Routine
Collector	: Client

Parameter	Qualifier	Result	DL	RL	Units	DF	Analyst	Date	Time	Batch	M
Volatile Organics											
BTEX - 4 items											
enzene	U	0.00	1.00	2.00	ug/kg	1.0	JAC	01/28/97	1730	97025	1
Ethylbenzene	U	0.00	1.00	2.00	ug/kg	1.0					
Toluene	U	0.00	1.00	2.00	ug/kg	1.0					
Xylenes (TOTAL)	U	0.00	1.00	4.00	ug/kg	1.0					
Naphthalene	J	1.06	1.00	2.00	ug/kg	1.0					

Surrogate Recovery	Test	Percent%	Acceptable Limits
Bromofluorobenzene	BTEX-8260	116.	(53.5 - 154.)
Dibromofluoromethane	BTEX-8260	73.0	(63.4 - 136.)
Toluene-d8	BTEX-8260	103.	(72.1 - 137.)
Bromofluorobenzene	NAP-8260	116.	(53.5 - 154.)
Dibromofluoromethane	NAP-8260	73.0	(63.4 - 136.)
Toluene-d8	NAP-8260	103.	(72.1 - 137.)

M = Method	Method-Description
M 1	EPA 8260

PO Box 30712 • Charleston, SC 29417 • 2040 Savage Road • 29407

(803) 556-8171 • Fax (803) 766-1178

9701418-02

Printed on recycled paper

GENERAL ENGINEERING LABORATORIES

Meeting today's needs with a vision for tomorrow.

Laboratory Certifications

STATE	GEL	EPI
FL	E87156/87294	E87472/874
NC	233	
SC	10120	10582
TN	02934	02934

Client:	Supervisor of Ship Building & Conversion SUPSHIP-Portsmouth Detachment-Env. 1899 North Hobson Ave. North Charleston, South Carolina 29405-2106
Contact:	Mr. Bill Hiers
Project Description:	SUPSHIP-Portsmouth Detachment

cc: NPWC00196 Report Date: January 31, 1997

Sample ID : SPORT0315-2

M = Method	Method-Description

Notes:
The qualifiers in this report are defined as follows:
ND indicates that the analyte was not detected at a concentration greater than the detection limit.
J indicates presence of analyte at a concentration less than the reporting limit (RL) and greater than the detection limit (DL).
U indicates that the analyte was not detected at a concentration greater than the detection limit.
* indicates that a quality control analyte recovery is outside of specified acceptance criteria.

This data report has been prepared and reviewed
in accordance with General Engineering Laboratories
standard operating procedures. Please direct
any questions to your Project Manager, Karen Blakeney at (803) 769-7386.

Karen Blakeney
Reviewed By

PO Box 30712 • Charleston, SC 29417 • 2040 Savage Road • 29407

(803) 556-8171 • Fax (803) 766-1178

9701418-02

Printed on recycled paper

APPENDIX C

PHOTOGRAPHS

Southwest view of site prior to excavation. Stressed vegetation in foreground, four existing product recovery wells in background.

Southwest view of site after excavation of 18" f.o. pipeline. The five product recovery wells are in the background.

Workers in the process of removing a section of 18" f.o. pipeline. Sheet piling is visible inside the lower right trench wall.

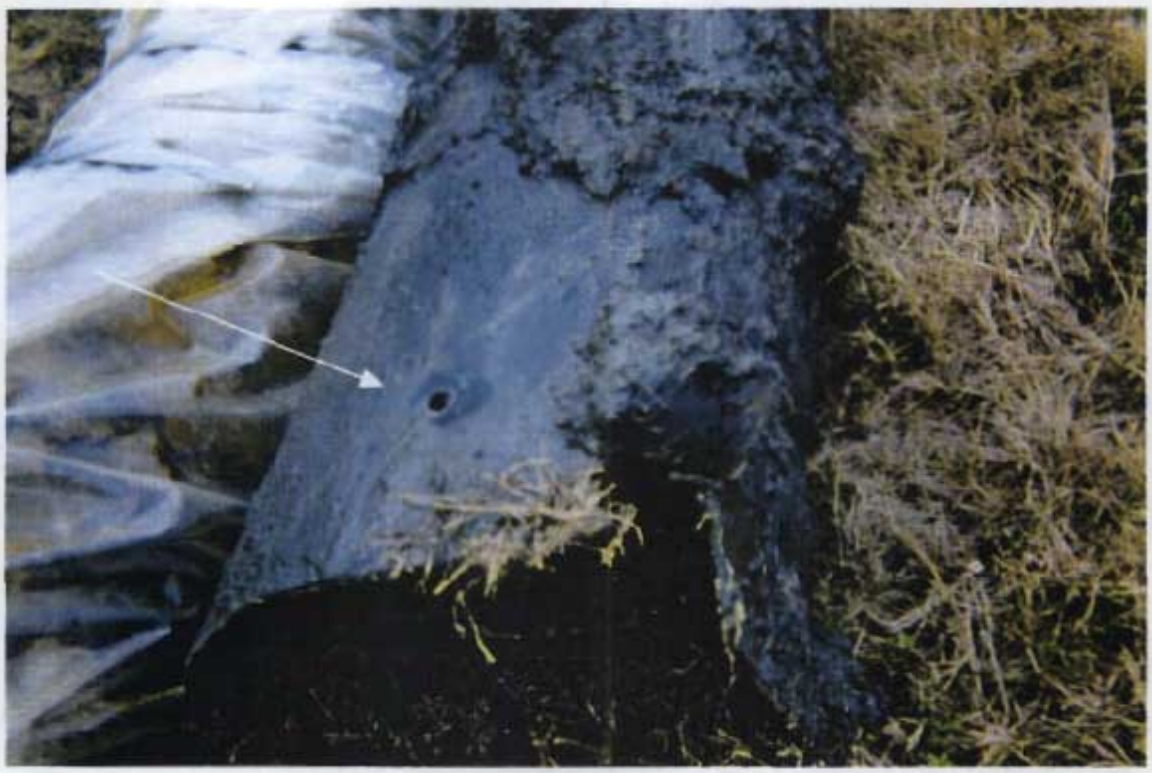

Typical hole identified throughout the length of the 18" f.o. pipeline.

Installation of product recovery system, 12" PVC horizontal and vertical pipe, inside trenchbox.

APPENDIX D

DRAWINGS

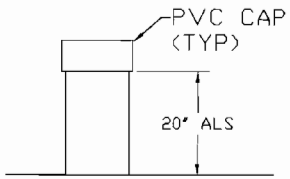

DETAIL 'C'

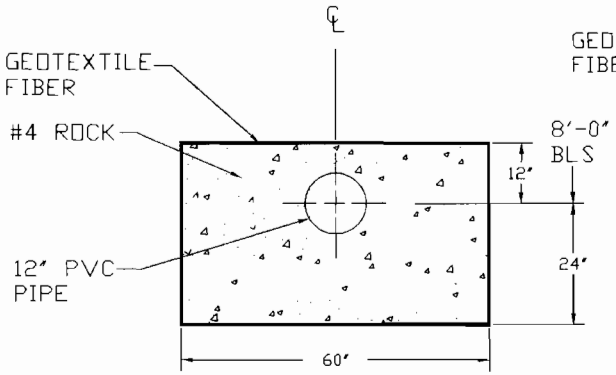

SECTION 'B'

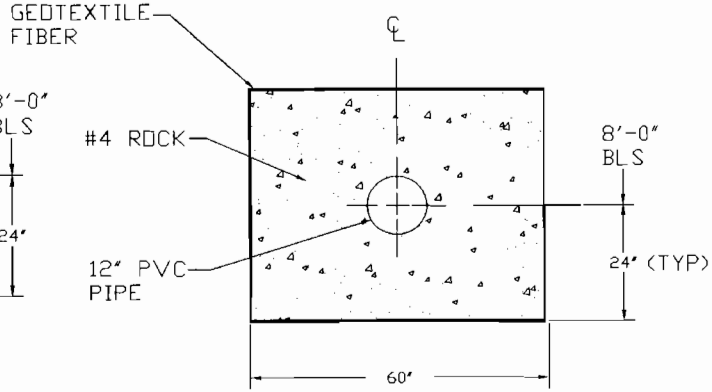

SECTION 'A'

GRAPHIC SCALE

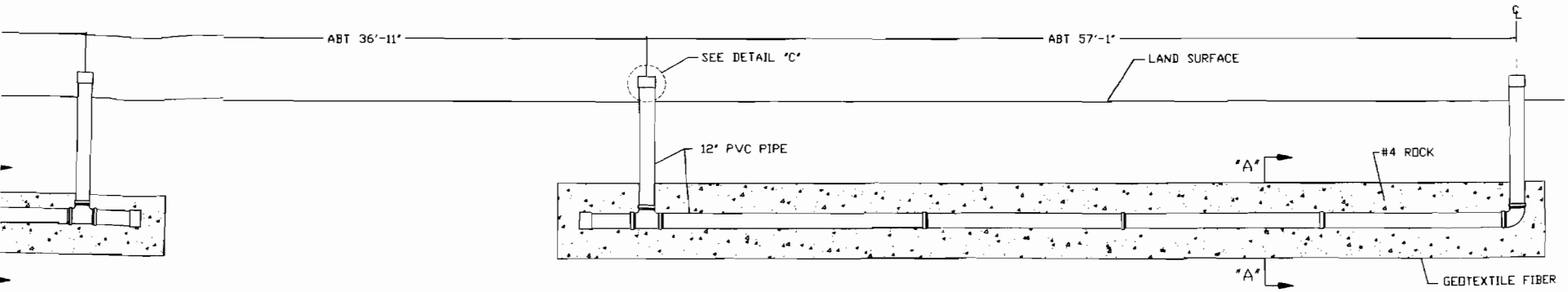

PRODUCT ELEVATION / RECOVERY SYSTEM

GRAPHIC SCALE

1' 0 1' 2' 3'

ENVIRONMENTAL DETACHMENT CHARLESTON

ADC 626

PRODUCT RECOVERY SYSTEM

ENGINEER T.L. GUNTER/T. LEVIS

SHEET 1 OF 2

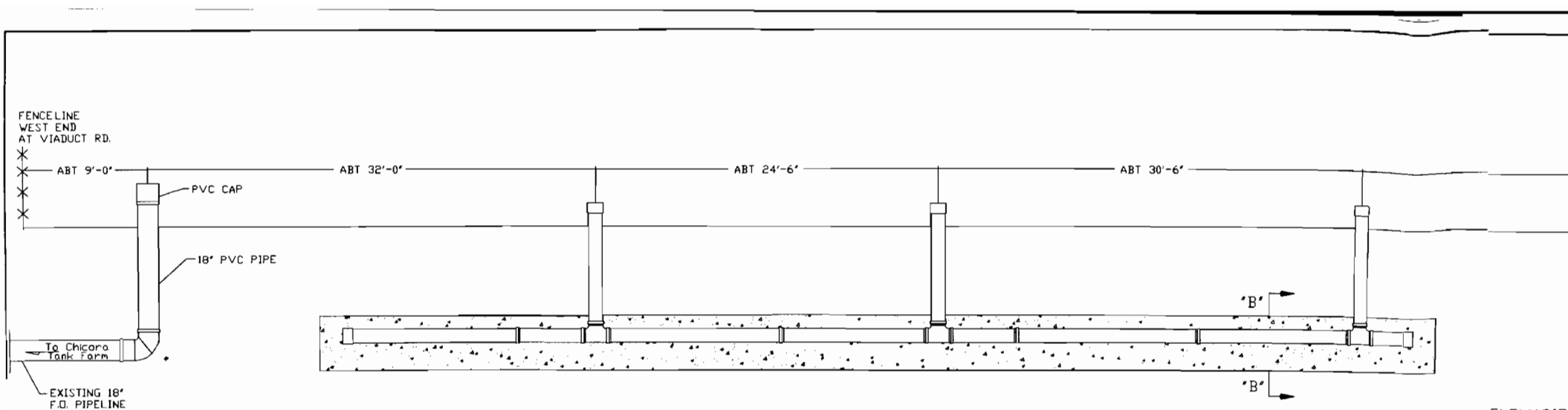

PRODUCT ELEVATIO
RECOVER