DEPARTMENT OF THE NAVY
NAVAL AIR STATION
11001 D STREET SUITE 143
CORPUS CHRISTI, TEXAS 78419-5021

IN REPLY REFER TO:
6280
Code 189

29 SEP 1994

RECEIVED
OCT - 3 1994
HAZARDOUS AND SOLID WASTE
CORRECTIVE ACTION

Texas Natural Resource Conservation Commission
Attn: Mr. Roger Dockery
Corrective Action Section
Federal Facilities Team
P.O. Box 13087, Capitol Station
Austin, TX 78711-3087

Gentlemen:

As requested, two copies of the RCRA Facility Investigation Workplan for selected solid waste management units at Naval Air Station Corpus Christi are enclosed.

If have any questions regarding this information, please contact Mr. James D. Boatman at (512) 939-2170.

Sincerely,

Terry Boone
Environmental Manager
by direction of
the Commanding Officer

Encl:
(1) RCRA Facility Investigation Workplan

Copy to:
Texas Natural Resource Conservation Commission
Region 14 Field Office
4410 Dillon Lane, Suite 47
Corpus Christi, TX 78415-5326

P84-5871

Professional Service Industries, Inc.

September 23, 1994

Commanding Officer
Code 189
NAS Corpus Christi
11001 D. Street, Suite 143
Corpus Christi, Texas 78419-5021

RECEIVED
SEP 27 1994

Re: RCRA Facility Investigation Workplan
March 18, 1994 Notice of Deficiency Response
Corpus Christi Naval Air Station
Delivery Order 0005
Contract No.: N62467-91-D-7873
PSI Project Number: 526-4L017

Gentlemen:

In response to your request and authorization by signed agreement, Professional Service Industries, Inc. (PSI) has prepared the revised RCRA Facility Investigation Workplan for selected solid waste management units at Corpus Christi Naval Air Station. Please note that revisions to our October 21, 1993 report are shown in italics. Enclosed are ten (10) copies of the workplan.

PSI appreciates the opportunity to provide environmental services for this important project. Should you need additional services on this or any other project, PSI offers a national network of offices and the combined expertise of over 3,000 employees.

Please do not hesitate to call should there be any questions about the project. Thank you for giving PSI your consideration.

Respectfully submitted,

PROFESSIONAL SERVICE INDUSTRIES, INC.

John D. Langan
Senior Geologist

Laura Gimpelson, P.E.
Senior Engineer

Kathyrn Velazquez
Project Scientist

John E. Cook
Department Manager
Environmental Services

Three Burwood Lane • San Antonio, TX 78216-7071 • Phone: 210/342-9377 • Fax: 210/342-9401

RCRA FACILITY INVESTIGATION WORKPLAN

NAVAL AIR STATION CORPUS CHRISTI, TEXAS
CONTRACT NUMBER: N62467-91-D-7873
DELIVERY ORDER NO. 0005

prepared for

NAVAL AIR STATION
CORPUS CHRISTI, TEXAS

prepared by

PROFESSIONAL SERVICES INDUSTRIES, INC.
THREE BURWOOD LANE
SAN ANTONIO, TEXAS 78216
(210) 342-9377

September 23, 1994

I. INTRODUCTION I.1
A. Purpose and Authorization I.1
B. Site Location and History I.1
C. Site Geology I.2
D. Site Waste Generation and Storage I.3
E. Site Solid Waste Management Units (SWMU) I.4

II. TECHNICAL APPROACH II.1
A. Selection of Solid Waste Management Units II.1
B. Selection of Sample Locations II.5
C. Description of Sample Collection Methods II.5
D. Selection of Sample Analyses II.6
E. Background Conditions II.7
F. Statistical Methods II.8

III. SOLID WASTE MANAGEMENT UNIT WORKPLANS III.1
A. Introduction III.1
B. SWMU 183: DRMO Storage Area III.1
C. SWMU 265: Building 1808 Floor Drain III.2
D. SWMU 274: CCAD Storm Sewer III.3
E. SWMUs 310-315: SSTP Sludge Drying Beds 1-6 . . . . . III.4
F. SWMUs 334-348: Industrial Wastewater Treatment Plant III.5
G. SWMU 9: North Gate Disposal Area III.6

IV. RFI SCHEDULE IV.1

V. WORKPLAN PROCEDURES V.1
A. Soil Assessment V.1
B. Groundwater Assessment V.3
C. Groundwater Sampling V.5
D. Groundwater Monitoring Program V.7

VI. SAFE WORK PRACTICES VI.1
A. Introduction VI.1
B. Training VI.1
C. General Safe Work Practices VI.1

VII. REFERENCES VII.1

psi

APPENDIX A

SUMMARY OF PREVIOUS RESULTS AND EXISTING DATA VII.3

APPENDIX B

DESCRIPTION OF INDUSTRIAL WASTEWATER TREATMENT PLANT VII.7

APPENDIX C

SAMPLE HANDLING GUIDELINES VII.8

APPENDIX D

SAMPLE TESTING PARAMETERS,
METHODOLOGIES & DETECTION LIMITS VII.9

APPENDIX E

WELL DIAGRAMS VII.10

APPENDIX F

SAFETY TRAINING OUTLINE VII.11

APPENDIX G

SAMPLE SITE SAFETY & HEALTH PLAN VII.12

APPENDIX H

RADIOACTIVE WASTE STORAGE BINS CLOSURE DOCUMENTATION VII.23

APPENDIX I

SWMU 305 . . . . . VII.24

APPENDIX J

SWMU 10 . . . . . VII.25

I. INTRODUCTION

A. Purpose and Authorization

On September 6, 1993, the Naval Air Station, Corpus Christi (NASCORPC) received the Texas Natural Resource Conservation Commission (TNRCC) approved amendment to the site's *1988* RCRA Part B Permit. As part of the amendment, the TNRCC indicated NASCORPC must develop a RCRA Facility Investigation Workplan (RFIW) to *facilitate the determination whether* past releases or practices from selected solid waste management units (SWMU) have negatively impacted human health or the environment.

Under Contract Number N62467-91-D-7873, Delivery Order No. 0003, and No. 0005 Professional Services Industries, Inc. (PSI) has been authorized by NASCORPC to develop a workplan for each SWMU that has the potential to impact human health and the environment. This RFIW has been developed in consultation with representatives of NASCORPC. PSI warrants that the RFIW has been prepared in accordance with generally accepted environmental science and engineering methods, only for the solid waste management units described in this document. The individual workplans are to be considered in total only within the context of this entire document. The RFIW has been prepared for the sole use of NASCORPC and may not be reproduced without the expressed written consent of NASCORPC.

B. Site Location and History

The 2,340 acre NASCORPC is located on State Highway 358, Naval Station Drive, three (3) miles southeast of the city of Corpus Christi, Texas. The facility is situated on the Encinal Peninsula on the Gulf of Mexico. Corpus Christi Bay is north of the site, *Laguna Madre is to the east,* and Cayo Del Oso Bay is to the west.

The NASCORPC has been located at this site since 1940. Established as a naval aviator training facility, it is also a maintenance and logistical facility for Navy, Army, and Coast Guard Aviation Units. Typical operations include metal plating, engine and air frame cleaning, fuel and ordnance storage, instrumentation maintenance and repair, and general aircraft maintenance. In addition to these activities, the facility provides housing and medical care to the military personnel working on-site.

C. Site Geology

The Gulf Coastal Plain in the vicinity of NASCORPC consists of sediments which are Pleistocene-Recent shoreline deposits belonging to the Beaumont Formation. The Beaumont Formation is part of the Chicot aquifer system that underlies the Corpus Christi area. It should be noted that Chicot aquifer water wells become artesian at depths exceeding 250 feet.

Water table elevation maps generated from monitoring wells installed in the uppermost aquifer at the NASCORPC indicate a groundwater gradient to the north toward Corpus Christi Bay. The lithologies encountered in wells and borings drilled on-site include fine-grained sand, silty sand and clay. Groundwater is encountered as shallow as 3.5 feet, and measured conductivities range from less than 600 microsiemens to over 30,000 microsiemens. The uppermost aquifer underlying NASCORPC is found between about 3.5 feet and 20 feet below the ground surface.

D. Site Waste Generation and Storage

The NASCORPC is a large-quantity generator of hazardous and industrial waste streams with a RCRA Part B Permit for storing containers of waste over 90 days at the *proposed* Defense Reutilization and Marketing Office (DRMO) *Conforming* Storage Area and conforming storage areas at Building 257 and Building 1820. Storage of drums and other contained waste for less than 90 days occurs at each operating building's assigned satellite accumulation area.

The major waste generator at NASCORPC is the Corpus Christi Army Depot (CCAD) Helicopter Maintenance Facility located in Building 8. Additional waste generators are the Naval Hospital, Operations Maintenance Department, Aircraft Intermediate Maintenance Department, Public Works Department and Coast Guard Air Station.

The aircraft maintenance activities generate organic and inorganic solid and liquid waste streams. Typical solid waste streams include lead acid batteries, paper, paint chips, empty paint containers, blasting beads, metal shavings, and scrap metal. Liquid waste streams include corrosive solutions; toluene; acetone; paint sludges; solutions of chromium, cadmium, copper, zinc, nickel, and cyanides; organic degreasers; waste fuels; chlorinated solvents; waste paint; chlorinated hydrocarbons; and industrial sewer liquids.

The medical facility, including the dental care center, generates low level radioactive wastes, silver solutions, domestic garbage, paper, empty containers, pathological wastes and liquid sanitary wastes.

The base maintenance and upkeep activities generate domestic garbage, empty paint containers, scrap metal, transformer oils, waste lube oils, waste paint sludges, spent solvents, Freon, battery acid, scrap metal, and sanitary sewer liquids.

E. Site Solid Waste Management Units (SWMU)

In the original RCRA Part B permit application, 360 SWMUs were listed. Approximately 345 SWMUs are active and 15 SWMUs are considered inactive.

Many of the SWMUs are Satellite Accumulation Areas located next to buildings used by various base operations. These areas hold the 55-gallon drums or garbage dumpsters used to collect the industrial or hazardous waste generated. Forty-eight (48) satellite accumulation areas are located within Building 8 to handle CCAD waste streams. Additional satellite accumulation areas are located throughout NASCORPC. *Once a container is filled with solid wastes, it is moved from a satellite accumulation area to a less than 90 day storage area. It is then sent to a conforming storage area for disposition. If a container contains liquid wastes, it is either sent to DRMO (SWMU 183) for disposition or, if appropriate, its contents are added to the material to be treated in the Industrial Wastewater Pretreatment Plant (IWPTP).*

Liquid wastes and vapors from the CCAD plating shop activities area separated into three streams: chrome, cyanide, and corrosive bearing fluids. The fluids from the plating shop drains (SWMU 244) enter the Chrome Tunnel (SWMU 245) and are either processed at the Industrial Waste PreTreatment Plant (IWPTP) Chromate Destruction Tank or recycled back to the plating shop. Treated streams are discharged into the Industrial Waste Sewer. Cyanide rinse water wastes and vapor exhausts enter the Cyanide Tunnel (SWMU 246) and are transferred to the IWPTP Cyanide Waste Storage Tank. They are processed through the Cyanide Destruction Unit and then discharged to the Industrial Waste Sewer. Acid and caustic rinse wastes and vapors are discharged to the Miscellaneous Tunnel (SWMU 247) and neutralized at the IWPTP. The

treated liquids are then sent to the IWTP. The IWPTP can be manually bypassed to allow plating shop fluids to go directly to the IWTP.

Some waste streams from Building 1808 are drummed and transported to the IWTP for manual batch processing. Liquid spills from CCAD go to the IWTP spill collection tank for treatment and processing at the IWTP. The IWTP also receives miscellaneous containerized liquid wastes from other CCAD areas.

Low-level radioactive materials from medical care and *selected bead blasting operations* are placed in drums before being stored in the Low-Level Radioactive Waste Storage Building 1279 (SWMU 355).

II. TECHNICAL APPROACH

A. Selection of Solid Waste Management Units

The RCRA Part B Permit Amendment issued by TNRCC specifies that the following SWMUs be investigated for potential negative impact to human health and the environment:

SWMU 1: DPDO Landfill (Site 1)
SWMU 2: CCAD Liquid Waste Disposal Area (Site 3)
SWMU 4: Aircraft Fire Training Area (Site 4)
SWMU 9: North Gate Disposal Area
SWMU 10: Radioactive Waste Disposal Area
SWMU 183: DRMO Storage Area
SWMU 196: Hospital Low-Level Radioactive Storage Bins
SWMU 244: Building 8 CCAD Activities, Plating Shop Drains
SWMU 245: Building 8 CCAD Activities, Chrome Tunnel
SWMU 247: Building 8 CCAD Activities, Miscellaneous Tunnel
SWMU 257: Building 8 CCAD Activities, Floor Drains
SWMU 258: Building 8 CCAD Activities, Floor Drains
SWMU 259: Building 8 CCAD Activities, Floor Drains
SWMU 264: Building 8 CCAD Activities, Floor Drains
SWMU 265: Building 1808 CCAD Activities, Floor Sewer
SWMU 274: Area Storm Sewer (CCAD)
SWMU 277-298: Bead Blasting Waste Collection Pans
SWMU 310-315: SSTP Sludge Drying Beds 1 - 6
SWMU 334-348: Industrial Wastewater Treatment Plant
SWMU 355: Low-Level Radioactive Storage Building
SWMU 357: Tank 305, Waste Solvent UST

SWMUs 9, 183, 265, 274, 310-315, and 334-348 will be the subject of individual workplans as described in the TNRCC RCRA Facility Investigation request. However, a review of site historical operating information and analytical data provides justification to omit or consolidate the other SWMUs. Accordingly, please note that *SWMUs 10, 196, 277-298, 355, and 357* have been omitted from this investigation and SWMUs 244-264 have been consolidated

into a *separate* workplan. Information supporting the omission and consolidation of the indicated SWMUs is presented on the following pages.

SWMUs 1, 2, and 4 are currently being studied separately by NASCORPC under the Department of Defense Installation Restoration Program. The facility investigation workplan included the installation of seventeen (17) groundwater monitoring wells and the collection of groundwater and soil samples at Sites 1, 3 and 4. The content of this workplan was approved by Texas Natural Resource Conservation Commission (TNRCC) representatives during a Technical Review Committee meeting on July 17, 1992. The *summary of results and data* from the facility investigation report for Sites 1, 3 and 4 is enclosed in Appendix A. The RFI for SWMUs 1, 2, and 4 has been submitted as a separate report.

The Radioactive Waste Disposal Area (SWMU 10) was believed to be used in the 1950's and 1960's. *Most of* the materials reportedly buried in this unit (krypton, cesium and radium-thorium) have relatively short half-lives. Due to lack of written records marking the location of SWMU 10, past efforts to locate the unit's 24-inch concrete "cistern" and manhole cover have been unsuccessful. Hurricanes and other tropical storms have probably buried the manhole cover, decreasing the likelihood of discovery. *Documented efforts have been made to locate the disposal site. A surveyor layed out a search area in the general vicinity of the SWMU using a 20 foot grid system over an area measuring 200 feet by 200 feet. Each grid was searched with a metal detector in an effort to locate the SWMU cover. Details of the search effort are included in Appendix J.*

The Hospital Low-level Radioactive Storage Bins (SWMU 196) were operational from 1974 to 1993 *(see closure notification, Appendix H)*. Materials formerly stored in SWMU 196

were containerized and located on the first floor above the basement in Room 1492. Since any potential spilled material could not reasonably reach the soil and groundwater beneath the building, no impact to the soil or groundwater would be expected and no further study *is* justified at this time.

The Bead Blasting Machine Waste Collection Pans (SWMUs 277-298) are located in Building 8 and Building 51. The totally enclosed blasting machines use glass or plastic beads to remove paint or prepare metal parts for refinishing/maintenance. The waste materials generated by this process include grease, metals, magnesium, and magnesium thorium *(a low-level radioactive waste)*. The blasting units and collection pans are located on a concrete floor inside an enclosed building. The funnel-shaped collection pans are welded to the bottom of the machines. When the pan is full, a waste drum is placed underneath the small end of the pan and a valve is turned which allows the waste *to enter* the drum. After the collection pan is emptied, the drum is sealed and stored on concrete flooring in a separate storage area. Most storage drums are then transported to DRMO for disposal; however, the drums containing waste from the magnesium-thorium bead blasting units are transported to the Low-Level Radioactive Storage Building (SWMU 355). Since there appears to be little opportunity for contaminants to reach underlying soils or groundwater, no further study of these units is warranted at this time.

The Low-level Radioactive Waste Storage Building (SWMU 355) is located east of Building 8 and south of Gettysburg Street. The unit stores low-level radioactive waste from bead blasting *of magnesium-thorium engine components* and discarded *disposable* protective clothing from hospital procedures. *Standard operating procedures at CCAD's bead blasting units segregate radioactive wastes and hazardous wastes. No hazardous wastes are stored in*

the Low-level Radioactive Waste Storage Building. The drums are stored on asphalt pavement in an enclosed building which is surrounded by a security fence. Due to the containerization of the waste, the method of storage, and the limited accessibility, no further study of this SWMU is warranted at this time.

SWMUs 244-264 are located within Building 8, the site of a majority of CCAD helicopter maintenance activities. Building 8 is currently being investigated by NASCORPC under the Department of Defense Installation Restoration Program. A summary of the existing data regarding this site is enclosed in Appendix A. CCAD maintenance operations are arranged within an enclosed building similar to stores in a shopping mall. Each distinct helicopter maintenance operation is housed within a subdivided bay sharing interior walls with neighboring operations. (See Figure II.1)

Wastes from Building 8 are segregated according to physical and chemical characteristics. Solid materials, such as cleaning rags and used sandpaper, are placed in drums and stored in the satellite accumulation areas before being sent to the permitted drum storage areas. Liquid waste streams are either placed in drums or drain to the work area's floor drain or SWMU. The floor drains are connected to the industrial waste sewer system which carries liquid wastes to the IWPTP and the IWTP. If more than one bay at a time is draining fluids to the *sewer* system, commingling of streams *may occur.*

The RFI for Building 8 has been submitted to the Commission as a separate document.

SWMU 357, Tank 305, has reportedly never contained RCRA wastes. This unit is being assessed under the PST program. Therefore, no further investigation of this SWMU is planned under this RFI. Specific information regarding Tank 305 is attached in Appendix I.

NOTES: SWMU 244: FLOOR DR[illegible]NS
SWMU 245: CHROM[illegible]EL
SWMU 247: MISCEL[illegible] TUNNEL

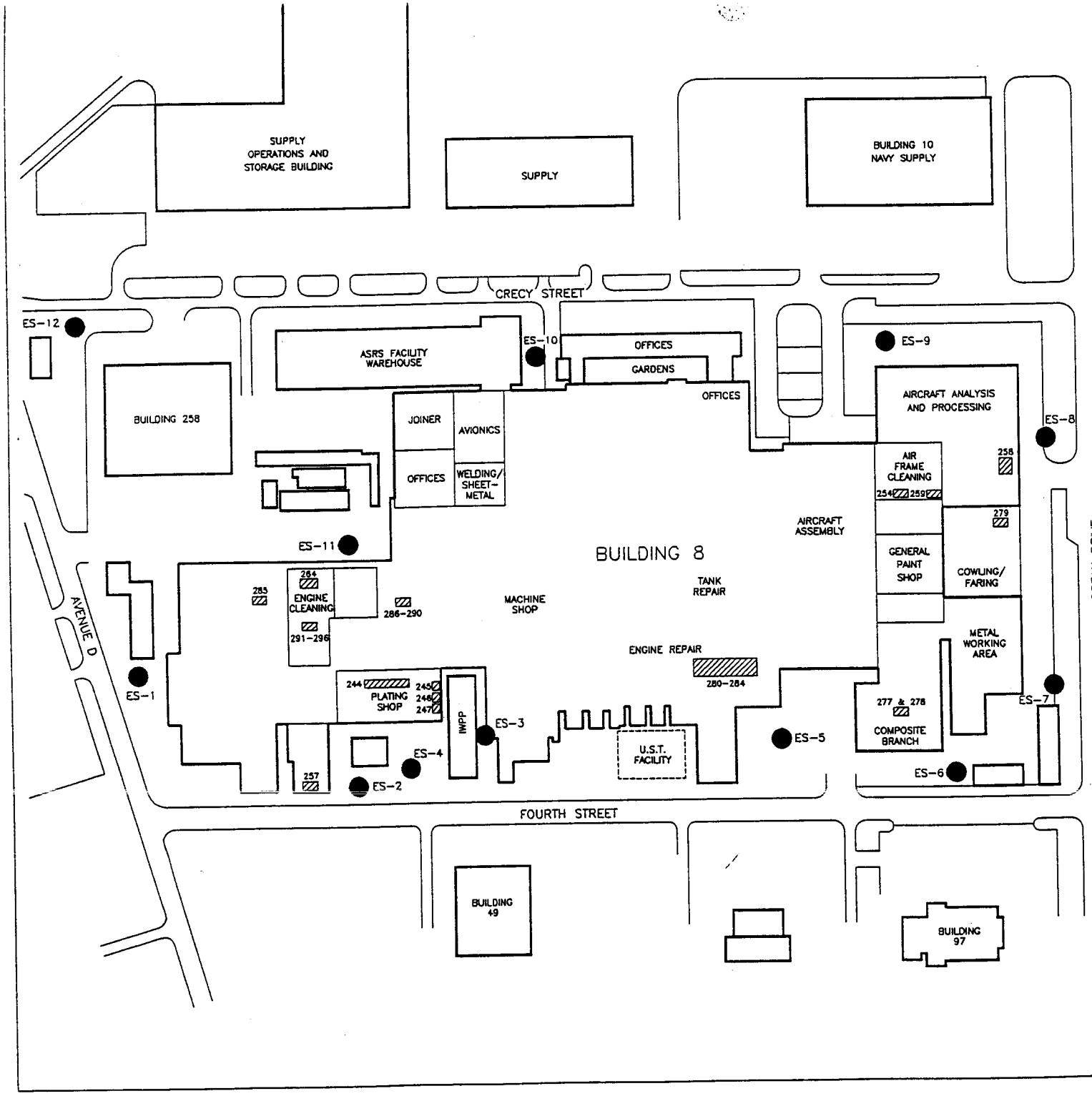

APPROXIMATE SCALE: 1" = 200'

SWMU Location

Existing Monitor Wells

Project No.	Date:	Drawn By:	Drawing Name:
526-4L017	07-28-94	E. Kieffer	TEMP

psi Professional Service Industries, Inc.
Three Burwood Lane
San Antonio, TX 78216

RCRA FACILITY WORKPLAN
FIGURE II.1
SWMU #244-264
Corpus Christi Naval Air Station
Corpus Christi, Texas

B. Selection of Sample Locations

Each workplan requires the collection of soil and/*or* groundwater samples. The purpose is to collect samples of the soil and groundwater at locations that supplement information *available from* historical data and on-going assessment activities. It is the intent of the RFIW to use as much existing information as possible.

The DRMO Storage Area (SWMU 183) is located between two (2) on-going groundwater assessment programs (Ensafe/Allen & Hoshall, *February 15, 1994*). Each program is defining the areal extent of contamination from past landfilling activities. Analytical results from the existing monitoring programs provide adequate groundwater information for the area and eliminate the need for additional groundwater monitoring wells at DRMO. *Ground-water sampling results are summarized in Appendix A.*

Sample locations discussed in the individual workplans (Section III) are approximate and are subject to modification during field operations. Exact sample locations for each SWMU will depend on health and safety considerations, underground and overhead utilities, physical obstructions, security restrictions, and drill rig accessibility.

C. Description of Sample Collection Methods

Soil and groundwater sample collection methods are outlined in Section V, Workplan Procedures. To be cost effective, soil samples obtained in the field will be divided into three (3) equal sections and placed in separate containers. One sample will be placed in an ice chest cooled to approximately 4°C, and immediately shipped to the analytical laboratory for *rush (3 day turnaround)* analysis of *TPH, TOX, and normal turnaround for VOCs and RCRA metals.*

The second and third samples will be retained for *no more than their proper holding times* in a temperature-controlled facility at the site should additional, more detailed or duplicate laboratory analysis be needed. Chain-of-custody procedures will be maintained during this time.

D. Selection of Sample Analyses

Soil and groundwater samples will be analyzed for *specific chemical parameters ascertained from results of recent sampling events, a review of the CCAD MSDS list, 40 CFR 265.92, and 30 TAC 335. In addition, the indicator parameters specified in 40 CFR 265.92 will be used to determine groundwater quality.* The three (3) broad chemical families used at NASCORPC are chlorinated hydrocarbons, non-chlorinated hydrocarbons, and metal solutions and solids. *Recent groundwater monitoring studies have detected the presence of several volatile chlorinated hydrocarbons, acetone, 2-butanone, benzene, cadmium, chromium, arsenic, barium, lead, and total petroleum hydrocarbons. Therefore, soil samples will be analyzed for:*

- Total Petroleum Hydrocarbons (TPH) *(Method 418.1)*[1]
- Total RCRA Metals *(Method 6010)*
- *Volatile Organics (Method 8260 or 8240)*
- *Semivolatile Organics (Method 8270)*[1]

Additional constituents may be added for a particular sample location if warranted. These additions are included in the individual SWMU workplans.

---

[1]TPH is an indicator parameter for organics. If TPH is observed above the background level, SVOC analysis will be performed for that sample. It should be noted that SVOC analyses will be performed for 20% of the samples to confirm TPH results.

Groundwater samples will be analyzed for all the above constituents and the following required water quality parameters:

- *Total Organic Carbon (TOC) (Method 415.1)*
- *Total Organic Halogens (TOX) (Method 9020)*
- *pH (Field Measurement)*
- *Conductivity (Field Measurement)*
- *Temperature (Field Measurement)*
- *Total Dissolved Solids (TDS) (Method 160.1)*
- *Chlorides (Method 325.2)*
- *Sulfates (Method 375.4)*
- *Iron (Method 200.7)*
- *Manganese (Method 200.7)*

Additional constituents may be added for a particular sample location if warranted. These additions are included in the individual SWMU workplans.

E. Background Conditions

The background sampling program will determine the normally occurring concentrations of various constituents in the soil and the uppermost aquifer within the boundaries of the NASCORPC. Background samples of soil and groundwater will be analyzed for:

- *Total Petroleum Hydrocarbons (TPH) (Method 418.1)*
- *Total RCRA Metals (Method 6010)*
- *Volatile Organics (Method 8260 or 8240)*
- *Semivolatile Organics (Method 8270)*
- *Copper (Method 200.7)*
- *Zinc (Method 200.7)*
- *Nickel (Method 200.7)*

Additional analyses for background groundwater samples will be for:

- *Total Organic Carbon (TOC) (Method 415.1)*
- *Total Organic Halogens (TOX) (Method 9020)*
- *pH (Field Measurement)*
- *Conductivity (Field Measurement)*
- *Temperature (Field Measurement)*
- *Total Dissolved Solids (TDS) (Method 160.1)*
- *Chlorides (Method 325.2)*
- *Sulfates (Method 375.4)*
- *Iron (Method 200.7)*
- *Manganese (Method 200.7)*

Fifteen soil borings will be drilled about 800 feet apart along the southern fenceline starting about 100 feet west of Runway 35 and ending near the eastern facility boundary. No borings will be placed within 1000 feet of the DRMO, SWMU 1, SWMU 2, or SWMU 4. No borings will be placed in a known contaminated area. Ten of the soil borings will be approximately 6 feet deep or terminating just above the uppermost aquifer. Five soil borings will be developed as monitoring wells which will be approximately 15 feet deep or two feet into the impermeable layer beneath the uppermost aquifer.

F. Statistical Methods

A review of site specific conditions (EnSafe/Allen & Hoshall, 1994a,b) and EPA methodologies (EPA 1989 and EPA 1992) suggests the following approach to statistical analysis of background levels in soil and groundwater for the Corpus Christi Naval Air Station.

Volatile organic compounds

Low levels, about 0 to 40 ppb, of volatile organic compounds are expected to occur in approximately five to ten percent of upgradient groundwater samples. These low level "hits" are most appropriately analyzed using Poisson statistics (Gibbons, 1987). Poisson tolerance limits using 95% coverage and 95% confidence will be developed for this contaminant class. In the event the data indicate Poisson statistics are inappropriate, nonparametric prediction limits will be developed instead.

Metals

Arsenic, barium, cadmium, chromium, and lead have been found in soils and groundwater at NASCORPC. Background levels for metals will be determined on a constituent by constituent basis. Data for each metal will be tested for normality (Shapiro-Wilk) and, if necessary, log-normality. If the data are approximately normal or log-normal in distribution, tolerance limits with 95% coverage and 95% confidence will be constructed. Otherwise, nonparametric tolerance limits will be developed.

Other Parameters

The statistical method to utilize for each of these parameters depends on the analytical results for the background samples. If more than 50% of the data are less than the detection limit, either non-parametric or Poisson based tolerance intervals will be developed. If less than 50% of the data are below the detection limit, normal or log-normal statistics may be utilized with

appropriate data adjustments for values below the detection limit (EPA 1992). If less than 50% of the data are below the detection limit and neither the normal nor the log-normal distribution is appropriate (by the Shapiro-Wilk test of normality), nonparametric tolerance limits will be generated.

III. SOLID WASTE MANAGEMENT UNIT WORKPLANS

A. Introduction

As explained in Section II, the following amended list of SWMUs will *have SWMU Workplans* as part of the RFIW:

SWMU 183: DRMO Storage Area

SWMU 265: Building 1808 CCAD Activities

SWMU 274: Area Storm Sewer (CCAD)

SWMU 310-315: SSTP Sludge Drying Beds 1-6

SWMU 334-348: Industrial Wastewater Treatment Plant

SWMU 9: North Gate Disposal Area

The approximate *locations of these units are* shown on Figure III.1. Individual workplans for each SWMU are *detailed* below.

B. SWMU 183: DRMO Storage Area

The DRMO Storage Area (SWMU 183) is a paved and fenced fourteen (14) acre RCRA facility. Much of the facility is used for open storage of used equipment and recyclable metals. The facility has reportedly stored non-PCB transformers and capacitors, waste batteries, circuit boards and used construction equipment. A metal building and concrete pad is used to store drums of waste generated at NASCORPC, including the CCAD facilities. Drums are stored on asphalt pavement or concrete pads. Currently, two groundwater assessment programs are collecting data from numerous wells in the immediate area. Additional work proposed as part of the RFI is intended to supplement the *previous and* on-going monitoring programs.

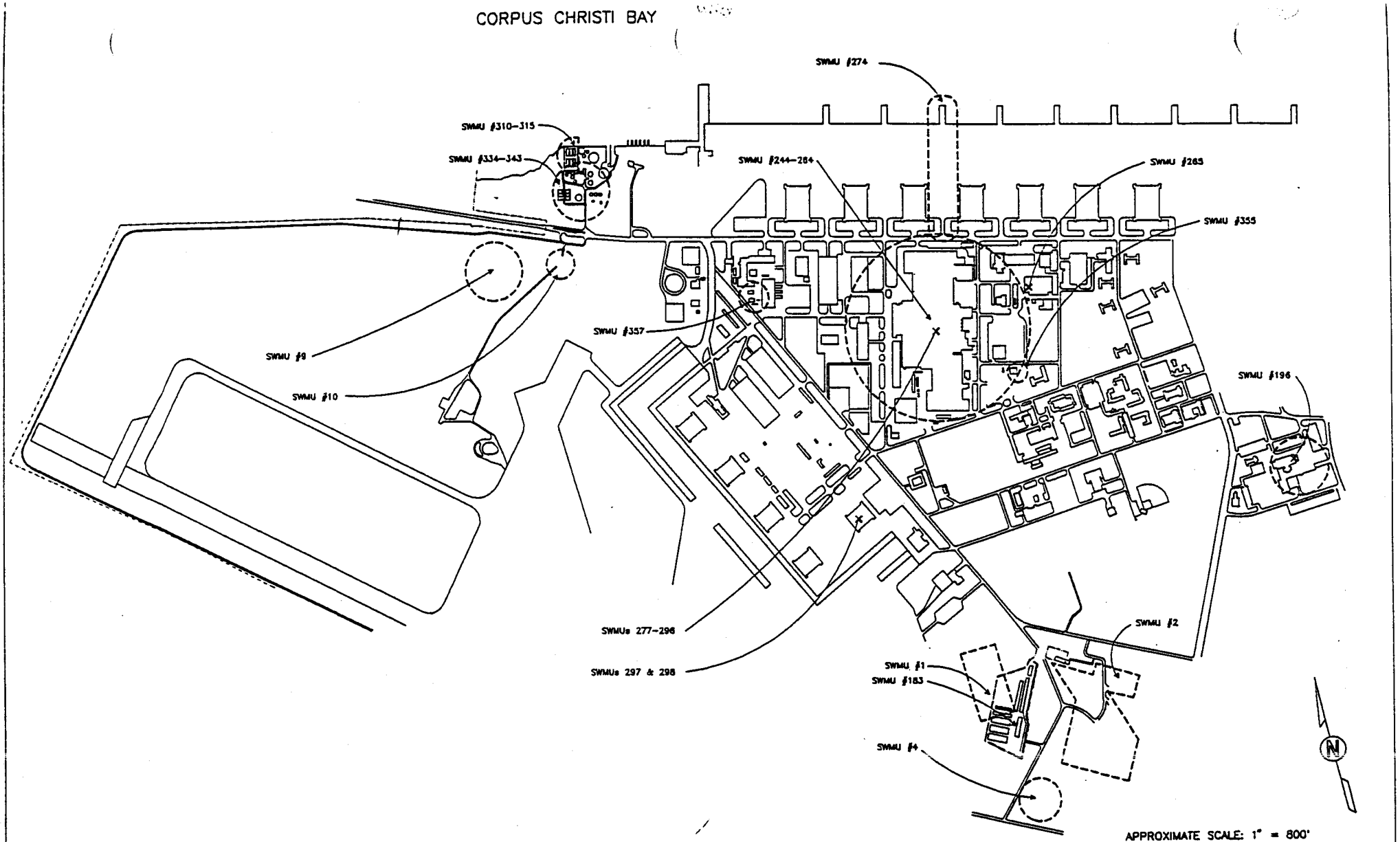

APPROXIMATE SCALE: 1" = 800'

Project No.	Date:	Drawn By:	Drawing Name:
526-4L017	07-28-94	E. Kieffer	4L017-01

psi

Professional Service Industries, Inc.
Three Burwood Lane
San Antonio, TX 78216

RCRA FACILITY WORKPLAN
FIGURE III.1
SWMU Location Map
Corpus Christi Naval Air Station
Corpus Christi, Texas

A review of available information regarding DRMO, CCAD's maintenance operations, and general base upkeep indicates potential substances placed in drums or stored in the area include chromium sludges, cadmium-containing sludges, chlorinated solvents, toluene, acetone, copper-containing sludges, nickel-containing sludges, containers, lead batteries, transformer oils and spent corrosive sludges.

The RFI will include four (4) soil borings drilled at locations marked on the attached site map (Figure *III.2*). The borings will be drilled to depths between five (5) and twenty (20) feet, depending upon depth to groundwater. Soil samples will be obtained *continuously* to provide site-specific information regarding the absence or presence of potential contaminants beneath the site. Due to the numerous groundwater monitoring wells surrounding the site, no additional monitoring wells appear to be warranted.

Soil samples will be tested as described in section II.D. If additional analytical tests are required, they will be for:

- *Copper, Zinc, Nickel, and Iron if any RCRA metals are detected above background.*

C. SWMU 265: Building 1808 Floor Drain

The building 1808 Floor Drain (SWMU 265) is connected to the Industrial Wastewater sewer line (determined by dye testing July 23, 1994; witnessed by David Harvey of TNRCC).

Building 1808 is used as a paint shop for helicopters. Waste streams from these activities are drummed for batch processing the IWTP. Potential substances generated in Building 1808 include chlorinated solvents, toluene, acetone, methyl ethyl ketone, waste paints and thinners, scrap metal, waste primers, and waste paint sealants.

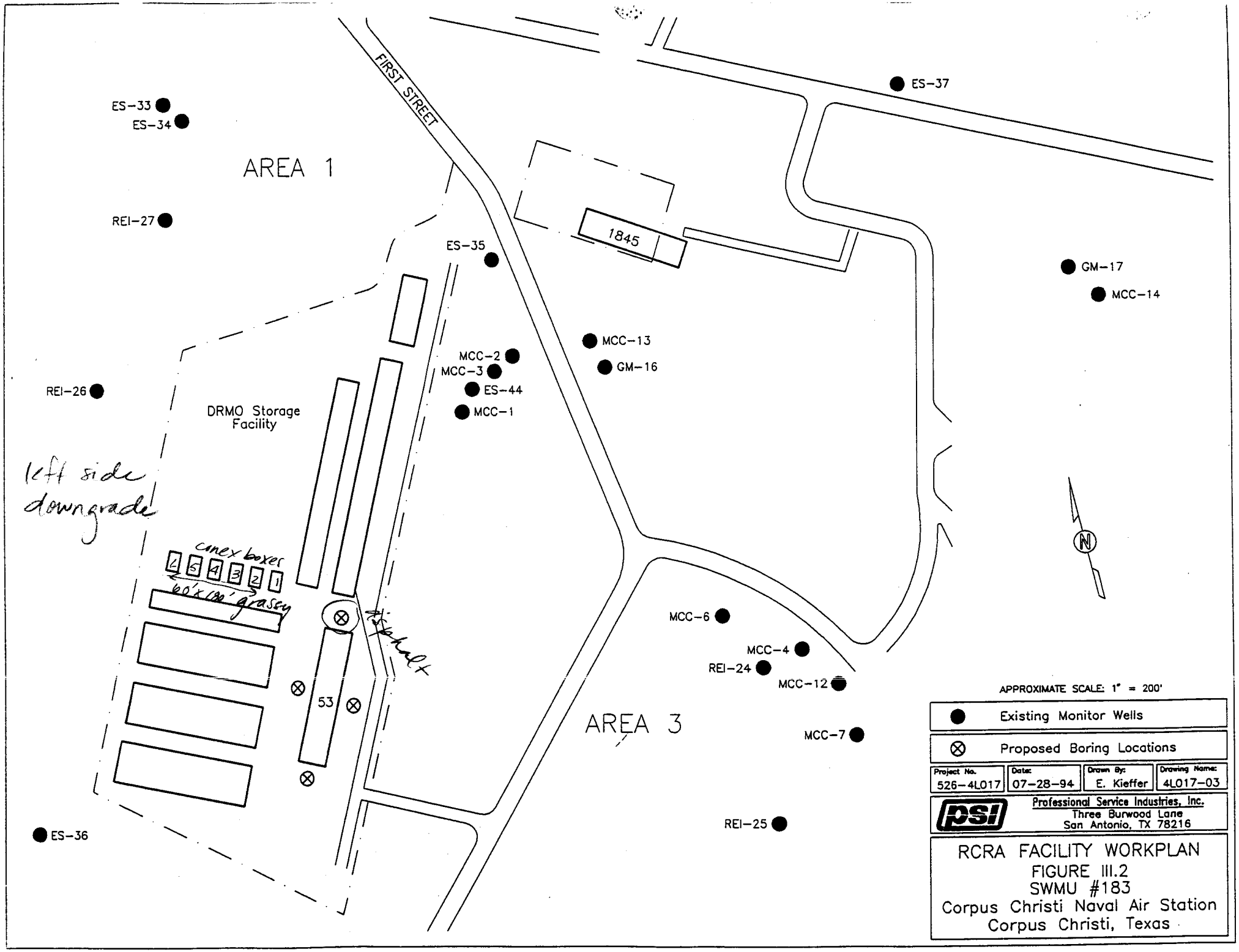
FIRST STREET
ES-33
ES-34
AREA 1
REI-27
ES-35
1845
ES-37
GM-17
MCC-14
MCC-13
GM-16
MCC-2
MCC-3
ES-44
MCC-1
REI-26
DRMO Storage Facility
left side downgrade
conex boxes
6 5 4 3 2 1
60'x120' grassy
asphalt
53
MCC-6
MCC-4
REI-24
MCC-12
AREA 3
MCC-7
REI-25
ES-36
N
APPROXIMATE SCALE: 1" = 200'
Existing Monitor Wells
Proposed Boring Locations
Project No. 526-4L017
Date: 07-28-94
Drawn By: E. Kieffer
Drawing Name: 4L017-03
psi
Professional Service Industries, Inc.
Three Burwood Lane
San Antonio, TX 78216
RCRA FACILITY WORKPLAN
FIGURE III.2
SWMU #183
Corpus Christi Naval Air Station
Corpus Christi, Texas

The RFI will include one (1) soil boring drilled at the location marked on the attached site map (Figure III.3). This boring will be drilled to a depth between five (5) and twenty (20) feet, depending upon depth to groundwater. One soil sample from each five foot interval of the boring will be obtained to provide information regarding the absence or presence of potential contaminants near the drain line.

Soil samples will be tested as described in section II.D. If additional analytical tests are required, they will be for:

- *Copper, Zinc, and Nickel if any RCRA metals are detected above background. Should statistically significant differences from background concentrations be observed at the site, additional soil borings and analytical testing may be warranted.*

D. SWMU 274: CCAD Storm Sewer

The CCAD Storm Sewer (SWMU 274) conveys rainwater runoff from the roofs of Buildings 8 and 1808, roadway drains, and parking lot drains to a discharge point in the Corpus Christi Bay (see Figure III.4). The storm sewer may have conveyed industrial wastewater into the bay before the construction of the industrial waste sewer.

Based on knowledge of the area's current industrial activities, *de minimis concentrations of the following chemicals may have entered the storm sewer:* chromium containing sludges, organic solutions, cadmium-containing sludges, chlorinated solvents solutions, copper-containing sludges, nickel-containing sludges, spent cutting oils, spent lube oils, lead, waste paint sludge, and spent corrosive sludges. Currently rainwater runoff may contain minimal concentrations of petroleum products, surficial lead, *pesticides*, and dust.

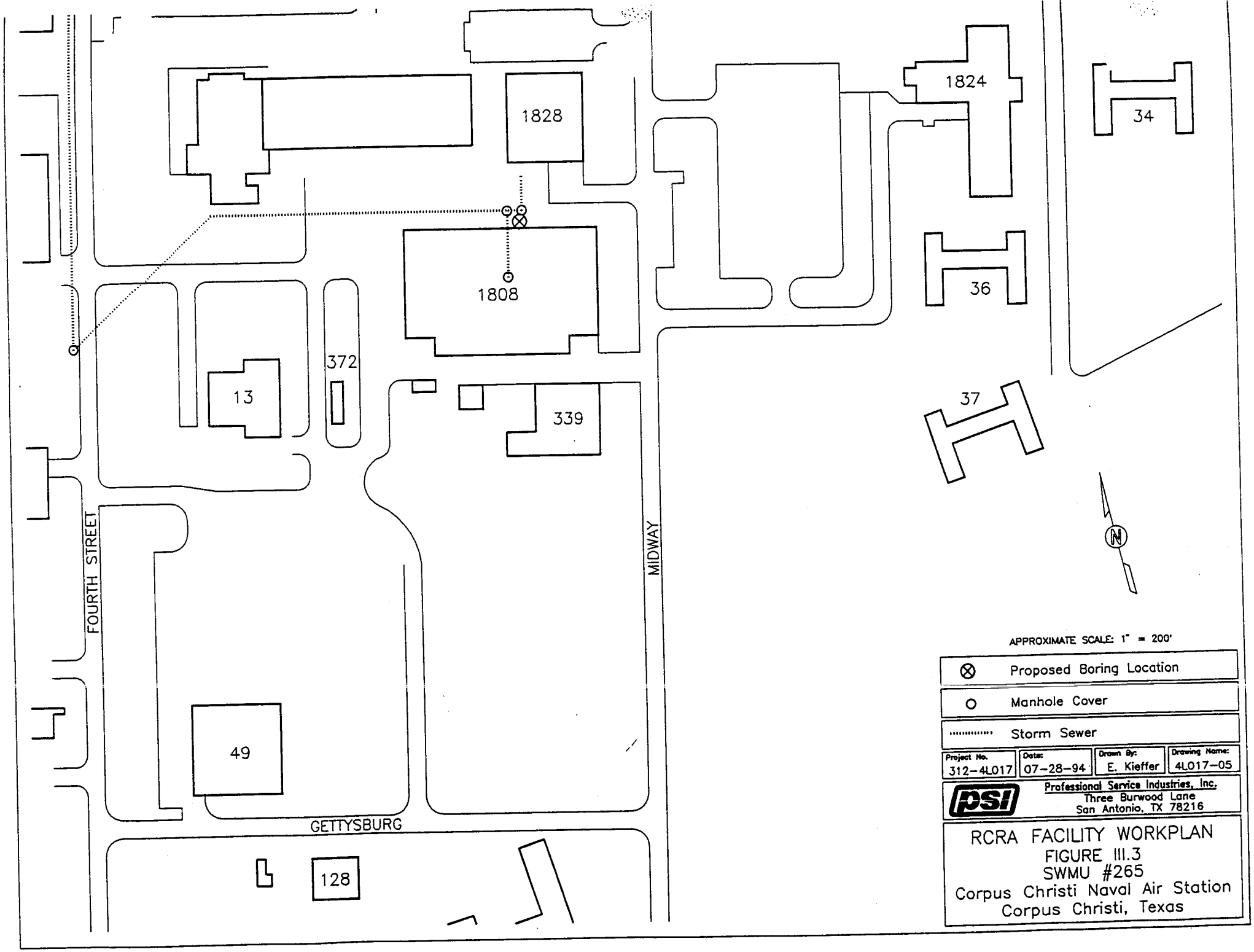
1828
1824
34
1808
36
372
13
339
37
FOURTH STREET
MIDWAY
49
GETTYSBURG
128
N
APPROXIMATE SCALE: 1" = 200'
Proposed Boring Location
Manhole Cover
Storm Sewer
Project No. 312-4L017
Date: 07-28-94
Drawn By: E. Kieffer
Drawing Name: 4L017-05
psi
Professional Service Industries, Inc.
Three Burwood Lane
San Antonio, TX 78216
RCRA FACILITY WORKPLAN
FIGURE III.3
SWMU #265
Corpus Christi Naval Air Station
Corpus Christi, Texas

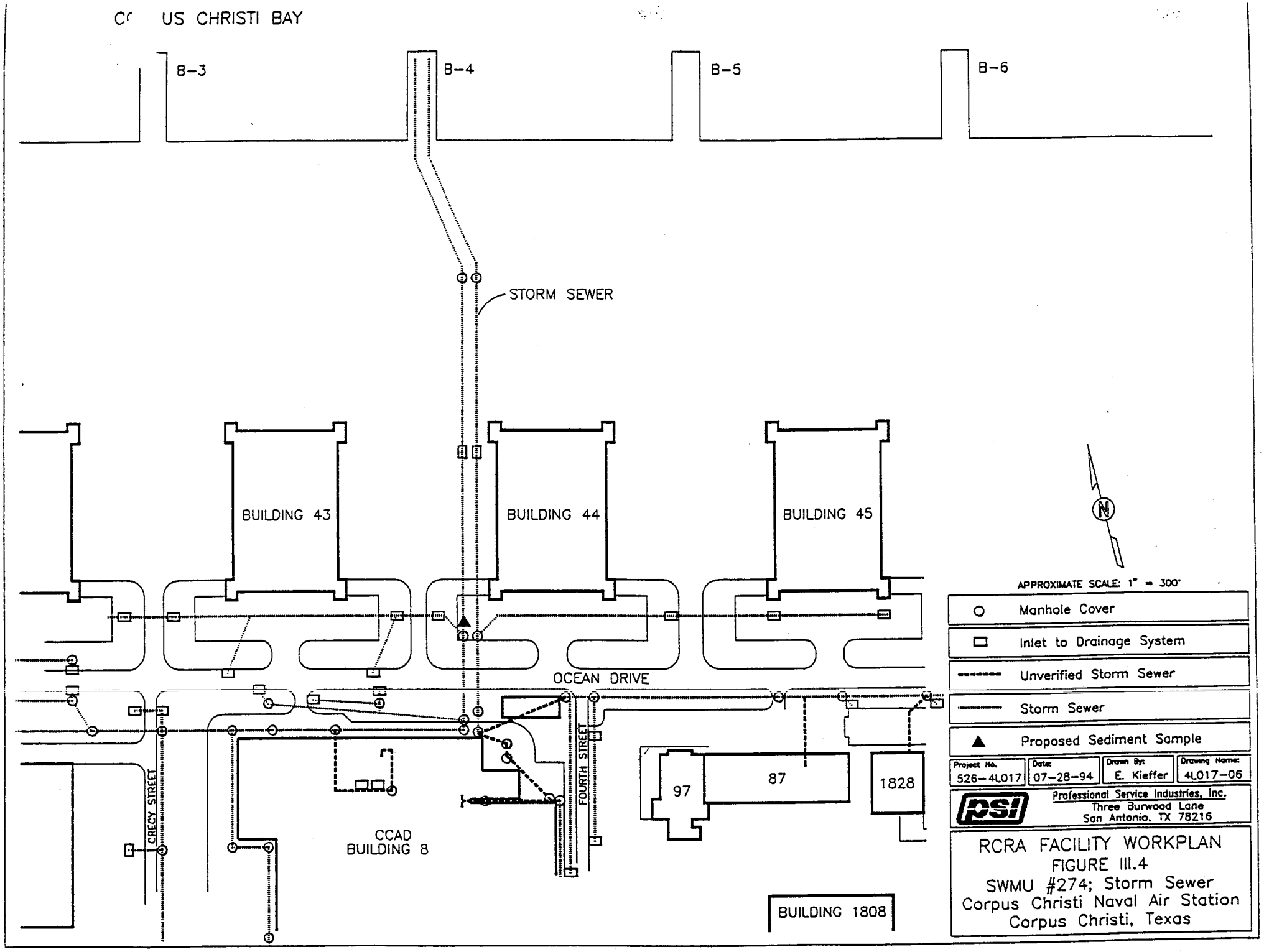
CC US CHRISTI BAY
B-3
B-4
B-5
B-6
STORM SEWER
BUILDING 43
BUILDING 44
BUILDING 45
OCEAN DRIVE
CRECY STREET
FOURTH STREET
CCAD
BUILDING 8
97
87
1828
BUILDING 1808
N
APPROXIMATE SCALE: 1" = 300'
Manhole Cover
Inlet to Drainage System
Unverified Storm Sewer
Storm Sewer
Proposed Sediment Sample
Project No. 526-4L017
Date: 07-28-94
Drawn By: E. Kieffer
Drawing Name: 4L017-06
psi
Professional Service Industries, Inc.
Three Burwood Lane
San Antonio, TX 78216
RCRA FACILITY WORKPLAN
FIGURE III.4
SWMU #274; Storm Sewer
Corpus Christi Naval Air Station
Corpus Christi, Texas

To determine if *possible* past industrial wastewater discharges have impacted the bay, the RFI will consist of *obtaining* a sediment sample *from the sewer line at a maintenance manhole if enough sediments are present in the line. The sample will be tested for VOCs, TPH, TOX, and 8 RCRA Metals (chromium, cadmium, lead, arsenic, silver, barium, mercury, selenium).* If additional analytical tests are required, they will be for:

- *Copper, Zinc, and Nickel if any RCRA metals are detected above background.*

Also, one water sample will be collected during a discharge event and tested for TOC, TOX, TPH, *VOC*, pH, RCRA Metals, TDS, chlorides and sulfates. If existing analytical testing results for rain water runoff are available for this unit, this information may be used in lieu of additional testing.

E. SWMUs 310-315: SSTP Sludge Drying Beds 1-6

The SSTP Sludge Drying Beds 1-6 (SWMUs 310-315) have received sludge from the existing SSTP, which receives domestic inflows from NASCORPC. *The RFI will consist of analyzing 3 samples from half of the drying beds (see figure III.5). The samples will be obtained at a depth of 3 feet using a hand auger. Since any volatile or semivolatile organic compounds presumably would have evaporated, the only analysis will be RCRA Metals (chromium, cadmium, lead, arsenic, silver, barium, mercury, selenium). If statistically significant levels above background of RCRA metals are detected, additional analyses for copper, zinc, and nickel will be performed.*

F. SWMUs 334-348: Industrial Wastewater Treatment Plant

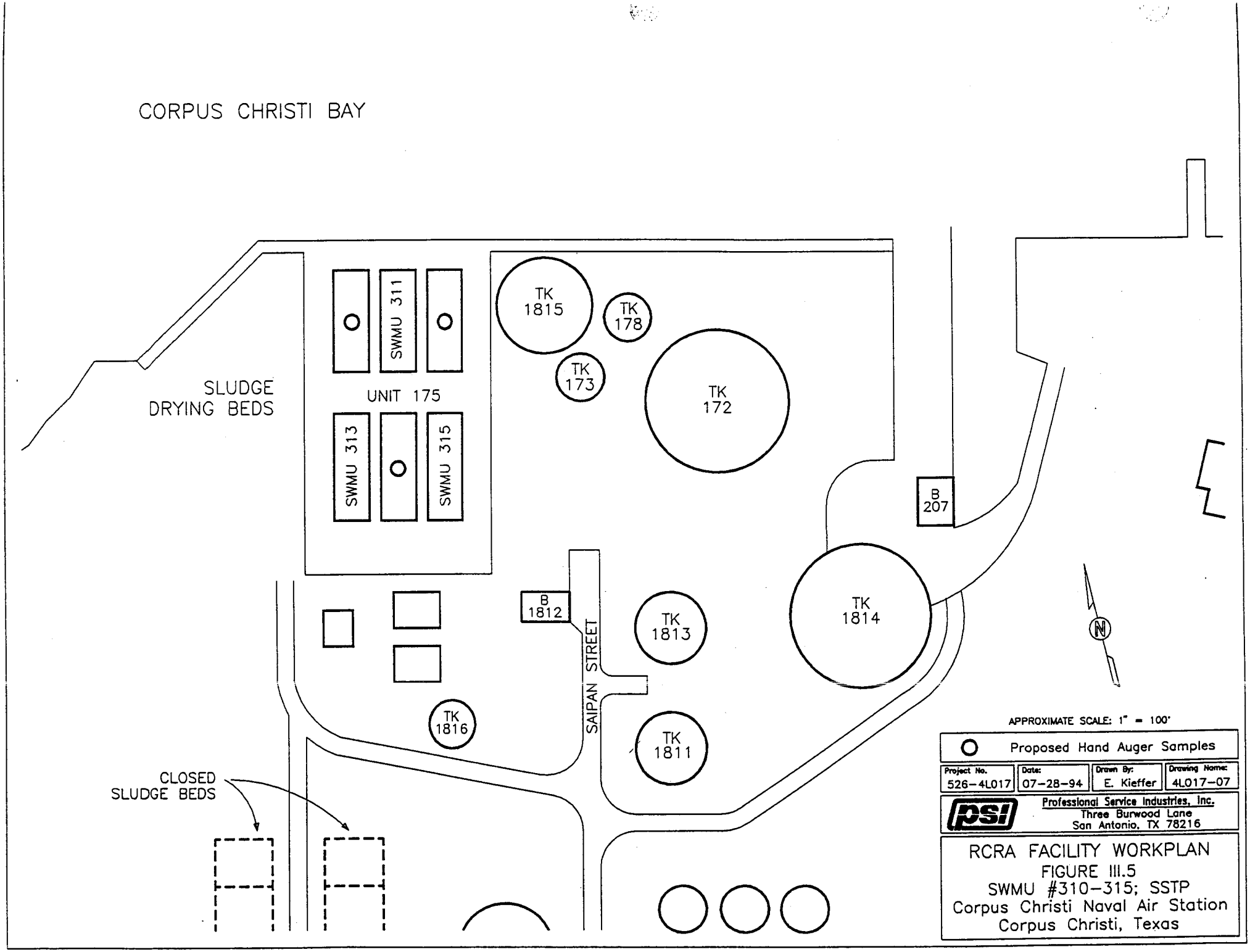
CORPUS CHRISTI BAY
SLUDGE DRYING BEDS
UNIT 175
SWMU 311
SWMU 313
SWMU 315
TK 1815
TK 178
TK 173
TK 172
B 207
B 1812
SAIPAN STREET
TK 1813
TK 1814
TK 1816
TK 1811
CLOSED SLUDGE BEDS
N
APPROXIMATE SCALE: 1" = 100'
Proposed Hand Auger Samples
Project No. 526-4L017
Date: 07-28-94
Drawn By: E. Kieffer
Drawing Name: 4L017-07
psi
Professional Service Industries, Inc.
Three Burwood Lane
San Antonio, TX 78216
RCRA FACILITY WORKPLAN
FIGURE III.5
SWMU #310-315; SSTP
Corpus Christi Naval Air Station
Corpus Christi, Texas

The Industrial Wastewater Treatment Plant (SWMUs 334-348) treats the process wastewater discharged from CCAD maintenance activities throughout the base. A brief description of each SWMU is included in Appendix *B*.

SWMUs 337 and 338 (Batch Phenol and Batch Cyanide destruction units) *have not been used for several years. The Batch Cyanide Destruction Tank treated cyanide containing liquids from Building 8 until the IWPTP came into service in the mid 1970's. SWMU 338 was removed from service and closed in place at that time. SWMU 337, the Batch Phenol Destruction unit, was constructed in the late 1980's; however, it was never connected to the IWTP. It is recommended* these units be closed in accordance with TNRCC regulations.

Based on knowledge of processes for CCAD's maintenance operations and information provided in recent Daily Monitoring Reports (DMR's), chemicals discharged to the IWTP system include chlorinated solvents, toluene, acetone, methyl ethyl ketone, waste hydrocarbons, waste paint and thinners, scrap metal, corrosive liquids, waste metal sludges, cyanide solutions, waste primers, and waste paint sealants.

Four (4) soil boring locations around the IWTP area are marked on the attached site map (Figure III.8). Anticipated depths for the borings will be on the order of *20* feet, *or to a lesser depth of five to ten feet into the uppermost aquifer*. These four (4) soil borings will be converted to groundwater monitoring wells according to EPA and TNRCC regulations and ASTM standards.

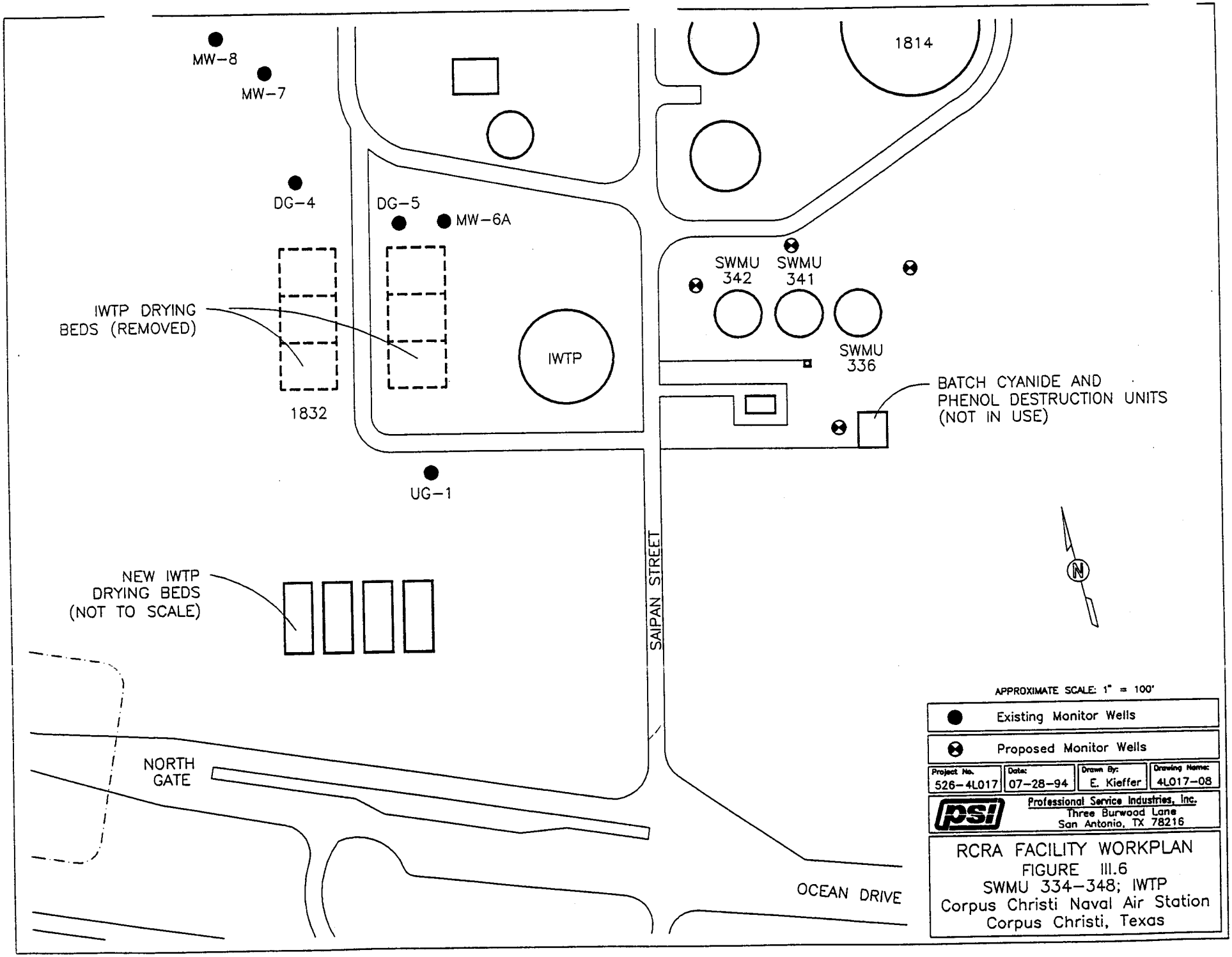
MW-8
MW-7
DG-4
DG-5
MW-6A
1814
SWMU 342
SWMU 341
SWMU 336
IWTP DRYING BEDS (REMOVED)
IWTP
1832
BATCH CYANIDE AND PHENOL DESTRUCTION UNITS (NOT IN USE)
UG-1
SAIPAN STREET
NEW IWTP DRYING BEDS (NOT TO SCALE)
N
NORTH GATE
OCEAN DRIVE
APPROXIMATE SCALE: 1" = 100'
Existing Monitor Wells
Proposed Monitor Wells
Project No. 526-4L017
Date: 07-28-94
Drawn By: E. Kieffer
Drawing Name: 4L017-08
psi
Professional Service Industries, Inc.
Three Burwood Lane
San Antonio, TX 78216
RCRA FACILITY WORKPLAN
FIGURE III.6
SWMU 334-348; IWTP
Corpus Christi Naval Air Station
Corpus Christi, Texas

Soil and Groundwater samples will be tested as described in section II.D. If additional analytical tests on soil samples are required, they will be for:

- *Copper, Zinc, and Nickel if any RCRA metals are detected above background.*

Groundwater samples will also be tested for total cyanides. Should statistically significant differences from background concentrations be observed at the site, additional soil borings, monitoring wells, and analytical testing may be warranted.

G. SWMU 9: North Gate Disposal Area

SWMU 9, the North Gate Disposal area, was investigated in 1986 under the NACIP characterization program. In a letter of March 4, 1987 the Texas Water Commission concluded there was no need for remedial action at this site. However, the Commission has requested groundwater sampling of each of the existing wells (Figure III.9) in conjunction with this RFI.

Groundwater samples will be tested as described in section II.D. If additional analytical tests are required, they will be for:

- *Copper, Zinc, and Nickel if any RCRA metals are detected above background.*

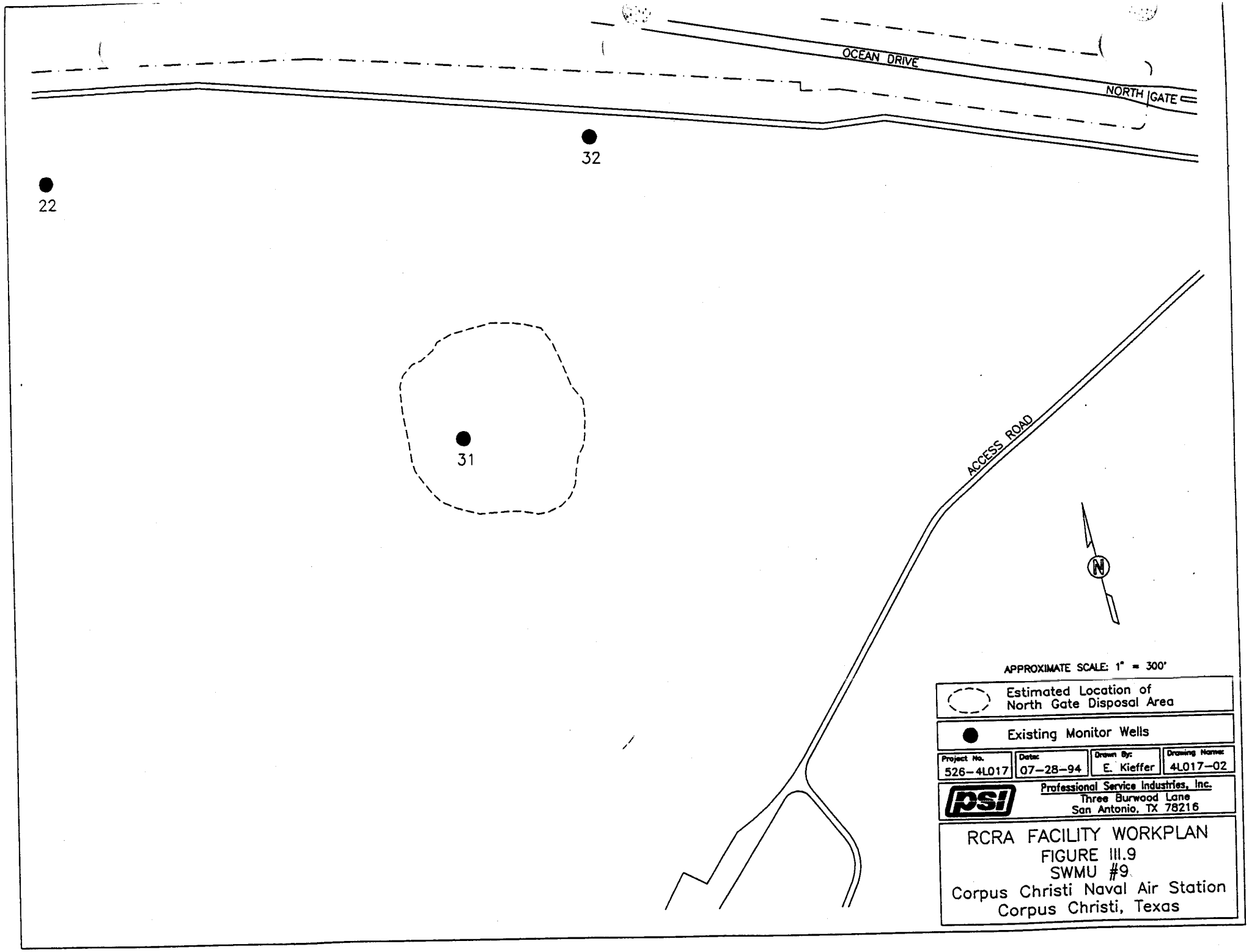
OCEAN DRIVE
NORTH GATE
32
22
31
ACCESS ROAD
N
APPROXIMATE SCALE: 1" = 300'
Estimated Location of North Gate Disposal Area
Existing Monitor Wells
Project No. 526-4L017
Date: 07-28-94
Drawn By: E. Kieffer
Drawing Name: 4L017-02
psi
Professional Service Industries, Inc.
Three Burwood Lane
San Antonio, TX 78216
RCRA FACILITY WORKPLAN
FIGURE III.9
SWMU #9
Corpus Christi Naval Air Station
Corpus Christi, Texas

IV. RFI SCHEDULE

The total time required for completion of the RFI is at least 22 months from the time the commission approves the RFI Workplan. A graphical breakdown of the scheduled activities is provided in figure IV.1. Please note that in the case of SWMU workplans which do not require groundwater sampling, soil sampling may commence at any time after the establishment of background. In the event a statistically significant change (SSC) from the site background soil and/or groundwater characteristics (as determined during background sampling) is observed, the NASCORPC will notify the executive director and apply for a permit amendment to initiate further investigation and/or corrective action.

TIMELINE

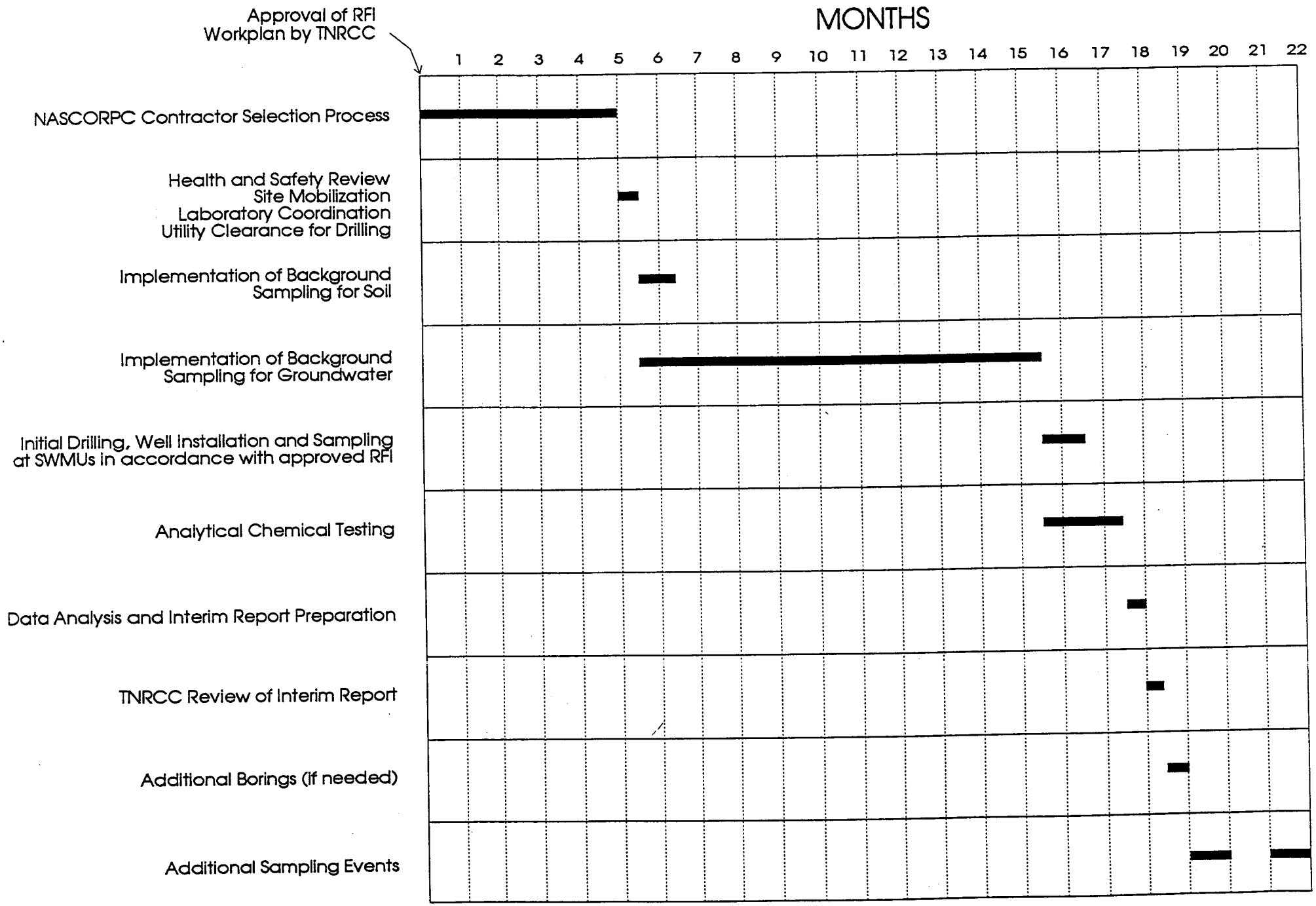
Approval of RFI Workplan by TNRCC
MONTHS
1 2 3 4 5 6 7 8 9 10 11 12 13 14 15 16 17 18 19 20 21 22
NASCORPC Contractor Selection Process
Health and Safety Review
Site Mobilization
Laboratory Coordination
Utility Clearance for Drilling
Implementation of Background Sampling for Soil
Implementation of Background Sampling for Groundwater
Initial Drilling, Well Installation and Sampling at SWMUs in accordance with approved RFI
Analytical Chemical Testing
Data Analysis and Interim Report Preparation
TNRCC Review of Interim Report
Additional Borings (if needed)
Additional Sampling Events

V. WORKPLAN PROCEDURES

This section of the RFIW details the methods to be employed during the RCRA Facility Investigation at Corpus Christi Naval Air Station. Prior to drilling, the contractor will obtain a drilling permit from Corpus Christi Naval Air Station. Drilling and well installation operations will be supervised by a qualified geologist or geotechnical engineer.

A. Soil Assessment

Surface/Shallow Soil Sampling

Individual surface soil samples (0-6 inches in depth) will be collected with a clean stainless steel hand trowel. Shallow soil samples (0-5 feet in depth) will be collected using a clean stainless steel hand auger. Composite soil samples will be placed in a clean container and mixed thoroughly. Representative samples will then be obtained from the center of the container using a thin-wall tube sampler. Sampling tools will be decontaminated by washing in a tap water/liquinox wash followed by nanograde isopropyl alcohol, 0.1N nitric acid, and deionized water rinses.

Soil Borings

Soil borings will be drilled using a hollow-stem auger. Soil samples will generally be obtained continuously from the ground surface to *the bottom of the boring (i.e., 20 feet or less). Soil borings will be terminated at depths of about twenty (20) feet or less if groundwater is encountered.*

Sample Collection

Soil samples will be obtained on a continuous basis using a spilt spoon or shelby tube for the first twenty feet. One discrete sample will be collected about every five feet at the highest detectable PID or OVA reading. If no detectable reading occurs, the soil sample will be collected from the middle of the five foot interval or where there is visible indication of contamination. The order of sample collection will be VOC,TOX, TPH, Metals, and other parameters. Soil samples will be placed in labeled jars, sealed, and placed in a cooler maintained at 4 °C. The chain-of-custody and analytical request form will then be completed and taped to the inside cover of the cooler. The filled cooler will be sealed shut and shipped to the laboratory by overnight courier.

Quality Control/Quality Assurance

One field duplicate soil sample will be collected and tested from every fourth boring for each sampling event for laboratory QA/QC. One field blank, one trip blank, and one equipment blank will be tested for each sampling event.

Drilling tools will be decontaminated by steam cleaning *before* and between each soil boring. Sampling tools will be decontaminated between each sample by washing in a tap water/liquinox wash followed by nanograde isopropyl alcohol, 0.1N nitric acid, and deionized water rinses.

Drill cuttings will be containerized in DOT approved 55-gallon drums, labelled, and stored at locations designated by the NASCORPC. Upon completion, soil boreholes will be plugged in accordance with TNRCC regulations.

Laboratory Testing/Quality Assurance

Analytical chemical testing will be performed in accordance with United States Environmental Protection Agency publication SW-846, Test Methods for Evaluating Solid Waste (U.S. EPA SW-846), and U.S. EPA "Methods for Analysis of Water and Wastes", EPA 600/4-79-020. Laboratory testing parameters, EPA testing methodologies, and detection limits are summarized in Appendix *D*. Analytical chemical testing will be performed by a qualified laboratory acceptable to the TNRCC and the NASCORPC.

B. Groundwater Assessment

Based on conditions encountered at the site, selected soil borings may be converted to 2-inch or 4-inch diameter monitoring wells. The installation of monitoring wells will be supervised by a qualified geologist or geotechnical engineer. Screen lengths will not exceed twenty (20) feet. Well casing and screen will be steam cleaned prior to use unless it is pre-packaged and certified clean by the manufacturer. Casing and screen will be threaded flush-joint schedule 40 PVC, unless analytical test results warrant more corrosive resistant material such as 316 stainless steel. Screen slot size will be 0.01 inch in width.

Monitoring wells will be installed by a Texas licensed monitoring well driller in accordance with 31 TAC 287. The annular space surrounding the screen will be filled with a uniform 20-40 washed sand pack. Sand will be added with the aid of a tremie pipe as the augers are removed from each borehole. The sand pack will be installed to approximately two feet above the top of the screen. A two-foot bentonite seal will then be installed on top of the sand pack. After the bentonite and sand is hydrated, the remaining annular space will be grouted to

the ground surface. Each monitoring well will be finished as a surface or upright completion, as appropriate (see Appendix *E*). Each monitoring well will be surveyed by a Texas registered surveyor for top of casing elevation and horizontal position relative to established NASCORPC benchmarks. Labels identifying the well's location and elevation will be posted on each monitoring well casing.

Well Development Methods

Each monitoring well will be developed to provide water samples representative of the aquifer. Monitoring wells *will* be developed using a *clean* bailer or submersible pump. A minimum of five well volumes will be removed during development. Well development will continue until a) the development water is clear and free of sand and silt, and b) three consecutive Ph, temperature and conductivity readings stabilize within ten percent. Well development water will be containerized in DOT approved 55-gallon drums and stored at locations designated by the NASCORPC.

Groundwater Gradient Determination

Depth to water measurements will be obtained at least 24 hours after well development and prior to purging and sampling operations. In each well, an interface probe will be used to record the distance between the top of well casing, the top of a light (floating) immiscible layer (if present), the surface of the water, and the top of a dense (sinking) immiscible layer (if present) in each monitoring well. Distances will be measured from *the top of casing datum* on the north side of each monitoring well casing. Measurements will be made to the nearest

hundredth (0.01) of a foot. Relative groundwater elevations will be calculated by subtracting the measured depth to water from the surveyed top of casing datum. A groundwater gradient map will be drawn from these calculated groundwater elevations.

C. Groundwater Sampling

Monitoring wells may be sampled no sooner than 24 hours after well development. Prior to sampling, monitoring wells will be purged of three to five well volumes using a dedicated bailer. If a monitoring well is bailed or pumped dry during purging, it will be sampled as soon as it recovers to yield an adequate sample volume. Purge water will be labelled, containerized in DOT approved containers, and stored at locations designated by the NASCORPC. After purging, samples will be collected and containerized in order of decreasing volatility as outlined below:

- Volatile Organics (VOC)
- *Semivolatile Organics (SVOC)*
- Total Organic Halogens (TOX)
- Total Petroleum Hydrocarbons (TPH)
- Total Metals
- Cyanide
- Sulfate and Chloride
- Turbidity
- Nitrate

Sample Collection and Preservation

Groundwater samples will be collected using a clean, dedicated bailer for each well. Groundwater samples will be collected in *appropriate* containers, labelled, and preserved in accordance with EPA and TNRCC guidelines (see Appendix *C*). *First, VOC samples will be collected using three 40 ml glass vials per well. Next, TPH samples will be collected in 1 liter amber bottles. Inorganic samples will be collected in 1 liter plastic jars. Each sample will be placed in a cooler maintained at 4 C. The chain-of-custody form will be completed, placed in a sealable plastic bag, and taped to the inside cover of the cooler. Samples will be handled and transported under proper chain-of-custody procedures in the field and laboratory, as outlined in EPA's* RCRA Groundwater Monitoring Technical Enforcement Guidance Document, September 1986.

One (1) equipment blank sample per day and one (1) trip blank and one (1) field blank per sampling event will be collected for laboratory testing. Also, one split sample for every 8 groundwater samples will be analyzed by an independent laboratory.

Laboratory Testing/Quality Assurance

Analytical chemical testing will be performed in accordance with U.S. EPA SW-846 and U.S. EPA 600/4-79-020. Laboratory testing parameters, EPA testing methodologies, and detection limits are summarized in Appendix *D*. Analytical chemical testing will be performed by a qualified laboratory acceptable to the TNRCC and NASCORPC.

D. Groundwater Monitoring Program

A groundwater monitoring program will be developed from information obtained during the RCRA Facility Investigation. A total of three (3) background monitoring events will be conducted with at least a two (2) month interval between each event.

VI. SAFE WORK PRACTICES

A. Introduction

Implementation of the RCRA Facility Investigation will involve *procedures with varying degrees of potential exposure to contaminants and physical hazards. Therefore, the Contractor must provide its employees with training and a detailed health and safety plan which addresses the health and safety aspects of the specific tasks which will be performed at each NASCORPC site.*

B. Training

Prior to performing any work at NASCORPC, the Contractor will provide evidence of compliance with all applicable Occupational Safety and Health Standards as outlined in 29 CFR 1910.120. The Contractor will also provide its employees with site-specific training and hazard communication as outlined in Appendix *F*.

C. General Safe Work Practices

The specific work performed by personnel will include *drilling and sampling activities.* The practices listed below are general in nature and applicable to the sites anticipated at NASCORPC. Each site will impose unique requirements, and these should be discussed in a Site Safety and Health Plan prepared specifically for that site. If other tasks are performed, safe work practices for those tasks should be developed prior to beginning the task. *An example of a Safety and Health Plan is included in Appendix G. It is only an example and should never be considered a stand alone document. This example Safety and Health Plan is only one element of a sophisticated health and safety program and can not be used outside of its intended context.*

Safe Work Practices for Drilling Operations

The following procedures and practices are general in nature. Site-specific considerations may be required in some instances. Where site-specific safety requirements are more stringent, they will govern drilling activities.

Once the boring location has been determined and staked, but before drilling equipment is mobilized to the location, the drilling personnel should "walk" the access route to the boring. The route should be inspected for surface conditions and obstacles to determine if alternate routes need to be used or *if* surface conditions need clearing or repairing. Underground or overhead utilities should also be noted and if locations are questionable, the local utility company should be contacted to obtain clearance.

After access and utilities have been cleared, the drilling equipment can be mobilized to the location. Before starting the drilling operation, drilling personnel should be dressed in standard safety equipment (hard hats, safety shoes or boots, gloves and eye protection) as well as the specified personal protective equipment, coordinated to provide an ensemble that will provide proper protection for the personnel. The clothing and PPE should be close-fitting but comfortable, and any straps, loose ends, excess cloth, drawstrings, or otherwise unfastened parts that may catch on some rotating or translating component of the drill rig should be taped or otherwise restrained to reduce the hazard.

Before startup, all personnel should be instructed in the location of safety devices and equipment, their operation and function. Minimum safety devices and equipment should include an engine kill switch, disengagement clutch, fire extinguisher, and first aid kit.

Before raising the mast, a "walk" around the equipment should be performed to determine if any obstacles are present that will hinder the raising of the mast. It is also important to check again for overhead and underground utilities. The rig can *then* be leveled and stabilized with the leveling jacks and/or solid cribbing. At this time, all personnel (except the operator) should be cleared and informed the mast is going to be raised. Once the mast is raised, it should be secured or locked into position.

The drilling tools and equipment should be examined for wear or breakage on a daily basis and repaired or replaced if necessary . Generally, the drilling tools that receive the most wear are pipe wrenches, standard penetration test hammer, cat head, cat rope, and winching lines and components. This equipment should be kept clean and in proper operating condition at all times.

During the drilling operation, the work area should be kept clean and organized. Tools should not be left at random locations on the ground. Drill cuttings should be cleared from the immediate work area and handled in keeping with the Site Work Rules. Personnel should be instructed to keep clear of rotating drill components at all times.

After completion of the boring, personnel should be informed the drill mast is going to be lowered and to stand clear. After determining personnel are clear and the rig is clear of obstacles, the mast can be lowered. The drill rig should then be checked to be sure all equipment is secure and ready to move to the next location. The open boring should be backfilled or covered if a well has not been set.

Engineering Controls for Drilling Operations

The Safety and Health Supervisor is responsible *for seeing* that all equipment is in good working order before assignment to a hazardous site. Special engineering controls may be required based on the hazards specific to that site; however, the following requirements are applicable to all work with a drill rig.

Kill Switch Every drill rig will be equipped with a kill switch easily accessible from the operating and cat head area of the rig.

Exhaust Maintain the exhaust system in good condition to minimize noise and sparks. Direct the exhaust away from the workers.

Shields Install appropriate equipment guards and engineering controls on tools and equipment. These may include rollover protection structures, seat belts, emergency shutoff in case of rollover, and backup warning lights. Provide shields and guards on rotating or translating parts wherever possible without interfering with the work process.

Engines Maintain all engines in good working order. Equipment may be needed for assistance in emergency situations, and must be available and useable when needed.

Masts Provide signs on rig masts saying "unlawful to operate this equipment within twenty feet of all power lines".

Electrical Use three-wire grounded extension cords with generators, portable electrical tools and appliances. Provide ground-fault interrupt for all electrical devices.

Safe Work Practices for Field Sampling

Sampling hazardous or toxic materials may involve direct contact with the material and increased risk of exposure over other tasks. The guidelines given here are general in nature. Specific guidelines should be developed for each site.

- Every sampling operation should be based on a written Sampling Plan that is prepared prior to starting the sampling operation. The information on the jobsite and the type of contaminants *should include:* the sample locations; the number, type and volume of samples at each sampling point; the type of sample containers; the sampling equipment and procedures to be used; sample preservation and shipping requirements; and decontamination procedures for equipment and personnel.
- Never set sample containers, notebooks, equipment, or other items on drums, containers, or other surfaces that may be contaminated.
- Avoid contact with contaminated surfaces whenever possible. Never walk through stained areas or puddles.
- Always consider unlabelled drums and containers to contain hazardous materials until positively identified otherwise.
- Unless directly involved in the operation, stay away from drums and containers that are being opened.
- Use non-sparking tools to open drums and containers, and when flammable atmospheres are a reasonable possibility.
- Open drums and containers in such a way *as* to relieve interior pressure by partially removing the small bung or cover first. Never handle or open a drum or container that

is swelling or bulging. Never use a pickaxe, hammer or other striking tool to open a drum or container. Whenever opening a drum or container, always open the uppermost closure first to avoid leakage or spraying of liquid contents.

- Never handle any container where crystalline material is noted on it. The contents will be considered as shock sensitive until they are positively identified.
- Do not approach drums or containers containing radioactive waste until their hazard to personnel has been properly assessed.
- Do not use boats or other floatation devices to support personnel on lagoons or impoundments until the liquids and their toxic properties have been identified and proper safety procedures implemented.

VII. REFERENCES

American Public Health Association, et al., Standard Methods for the Examination of Water and Wastewater, 18th Edition, 1992.

A.T. Kearney, Inc. for U.S. EPA Region VI, "RCRA Facility Assessment, PR/VSI Report", Naval Air Station, Corpus Christi, Texas, August 1988.

Corpus Christi Naval Air Station, Undated Letter Report responding to the February 9, 1993 letter from the Texas Water Commission, District 12 Field Office regarding Tank 305.

EnSafe/Allen & Hoshall, Final Groundwater Assessment Report, NAS Corpus Christi, February 15, 1994a.

EnSafe/Allen & Hoshall, Final Facility Investigation Report, Installation Restoration Sites 1,3, and 4, NAS Corpus Christi, February 15, 1994b.

Gibbons, Robert D., "Statistical Models for the Analysis of Volatile Organic Compounds in Waste Disposal Sites", Groundwater, Volume 25, Number 5, pages 572-580, September-Oct 1987.

McBride-Ratcliff & Associates, Inc., "Preliminary Site Assessment Study, Tanks 10 and 11 (TWC LUST No. 95272), NAS, Corpus Christi, Texas, December 19, 1991.

Resource Engineering, Inc., "Groundwater Monitoring Report, Landfill Sites 1, 3 and 9, Second Sampling Event", Naval Air Station, Corpus Christi, October 1986.

Sax, N. Irving, Dangerous Properties of Industrial Materials, New York, New York, Van Nostrand Reinhold Company, 1979.

U.S. EPA, "Methods for Chemical Analysis of Water and Wastes", EPA 600/4-79-020.

U.S. EPA Office of Solid Waste, Statistical Analysis of Ground-Water Monitoring Data at RCRA Facilities, DRAFT, Addendum to Interim Final Guidance, July 1992.

U.S. EPA Office of Solid Waste, Statistical Analysis of Ground-Water Monitoring Data at RCRA Facilities, Interim Final Guidance, April 1989.

U.S. EPA, "RCRA Ground Water Monitoring Technical Enforcement Guidance Document", September 1986.

U.S. EPA, "Test Methods for Evaluating Solid Waste", EPA SW-846.

U.S.G.S. Professional Paper 1270, "Element Concentrations in Soils and Other Surficial Materials of the Conterminous United States", Washington, D.C., 1984.

APPENDIX A

SUMMARY OF PREVIOUS RESULTS AND EXISTING DATA

Summary of Previous Results and Existing Data

Various environmental studies and investigations have been conducted at NASCORPC in the past decade. This is a brief summary of the major studies conducted to date. More detailed information is available through the investigation reports.

CCAD Building 8

The groundwater assessment of this site (Ensafe/Allen & Hoshall, February 15, 1994) found no significant soil contamination. However, groundwater contamination was observed in several wells (ES-3, ES-4, ES-5, ES-11 and ES-12). Arsenic, chromium, lead, mercury, and vinyl chloride were found in concentrations greater than the Medium Specific Concentrations (MSC's) for groundwater. Low levels of metals and chlorinated solvents were also observed. Tables 3 through 8 of the Final Groundwater Assessment Report contain the "hits" for organic and inorganic parameters for soil and groundwater around building 8. Lead contamination was found throughout the building 8 area in both soil and groundwater, but background samples (BG-1, BG-2, BG-3) also showed similar lead levels.

SWMU's 1,2,and 4

This area of NASCORPC has been the subject of extensive study. It was first investigated in 1983 by the Navy under Navy Assessment and Control of Installation Pollutants (NACIP). In 1984, Geraghty and Miller assisted the Navy in performing confirmation studies for the DPDO landfill (SWMU 1) and the CCAD Liquid Waste Disposal landfill (SWMU 2). Volatile Organic Compounds ranging from 7.7 to 104.5 ppb were observed in the Geraghty and Miller wells. Contaminants found included bromodichloromethane, dibromochloromethane,

Table 3
Organic (Soil Hits)
(ppb)

Parameter	Reference Conc.*	ES-1	ES-2	ES-3	ES-4	ES-5	ES-6	ES-7	ES-8	ES-9	ES-10	ES-11	ES-12	BG-1	BG-2	BG-3
Acetone	1,020,000	150	68	130	75	240	170	190	4900	14		3300	330	29	950	76
Benzene	500															
2-Butanone	511,000				6				2500		15					
Chlorobenzene	10,000															
1,1 Dichloroethane	1,020,000															
1,2 Dichloroethane	500															
1,1 Dichloroethene	700															
1,2 Dichloroethene	7,000															
Methylene Chloride	500	2							2	3		130		2	3	
1,1,1 Trichlorothane	20,000															
Trichloroethene	500															
Vinyl Chloride	200															

* Concentrations are based on the Risk Reduction Standards in Appendix II of 31TAC335.568 which are considered protective of groundwater at an industrial site under Standard 2.

Table 4
Inorganic (Soil Hits)
(ppb)

Parameter	Reference Conc.*	ES-1	ES-2	ES-3	ES-4	ES-5	ES-6	ES-7	ES-8	ES-9	ES-10	ES-11	ES-12	BG-1	BG-2	BG-3
Arsenic	5,000		600					700							1100	
Barium	200000	9000	35500			17200	6600	12900	15600	3100		7000	2200	2100	4800	9900
Cadmium	500															
Chromium	10000		1800			2700		3400	1700	1700					2200	2500
Lead	1500	760	2200			1300	1400	5100	2300	910		3100	1100	990	2800	2000
Mercury	200															
Selenium	5000														390	
Silver	51100															

* Concentrations are based on the Risk Reduction Standards in Appendix II of 31TAC335.568 which are considered protective of groundwater at an industrial site under Standard 2.

Shaded areas indicate results which exceed the referenced concentrations.

Table 5
Organic (Water Hits)(ppb)
Initial Sampling Event

Parameter	Reference Conc.*	ES-1	ES-2	ES-3	ES-4	ES-5	ES-6	ES-7	ES-8	ES-9	ES-11	ES-12	BG-1	BG-2	BG-3
Acetone	3,650			250	4	45		30	6				5		39
Benzene	5					5									
2-Butanone	1,830														
Chlorobenzene	100			10											
1,1 Dichloroethane	3,650				2	16					6				
1,2 Dichloroethane	5					11			1						
1,1 Dichloroethene	7				8	8					4				
1,2 Dichloroethene	70			450		800		16			12				
Methylene Chloride	5														
1,1,1 Trichlorothane	200				73						3				
Trichloroethene	5					14		2							
Vinyl Chloride	2			62		660									

* Concentrations are based on the Risk Reduction Standards in Appendix II of 31TAC335.568 as maximum concentrations allowed in groundwater under Standard 2.

Shaded areas indicate results which exceed the referenced concentrations.

Table 6
Inorganic (Water Filtered) (ppb)
Initial Sampling Event

Parameter	Reference Conc.*	ES-1	ES-2	ES-3	ES-4	ES-5	ES-6	ES-7	ES-8	ES-9	ES-11	ES-12	BG-1	BG-2	BG-3
Arsenic	50	6.9	10.6	51	1630	4.3	3.3	3.3	4.4	5.2	6.4	3.9	12	8.2	3.8
Barium	2000	580	247	35.9	215	389	130	227	191	268	328	718	865	146	304
Cadmium	5										6.1	16.5			
Chromium	100	52.5		106	97.3		12.8	5.3	19.8	33.8	61.2	97.1	56.8	10	35.8
Lead	15	24.7	4.7	53.4	18.4	6.5	9.8		9.8	14.8	31.2	52	39.3		13.2
Mercury	2			6.4									.66		
Selenium	50	3.3	1.8	18.8	7.1	1.2	1.8	1.8		1.8	2.4	6.2	8.5	3.9	2.9
Silver	183														

* Concentrations are based on the Risk Reduction Standards in Appendix II of 31TAC335.568 as maximum concentrations allowed in groundwater under Standard 2.

Shaded area indicate results which exceed the referenced concentrations.

Table 7
Organic (Water Flail(ppb)
Second Sampling Event

Parameter	Reference Conc.*	ES-1	ES-2	ES-3	ES-4	ES-5	ES-6	ES-7	ES-8	ES-9	ES-10	ES-11	ES-12	SD-1	SD-2	SD-3
Acetone	3,650			380												
Benzene	5															
2-Butanone	1,830															
Chlorobenzene	100			13												
1,1 Dichloroethane	3,650				8	2						20				
1,2 Dichloroethane	5								1							
1,1 Dichloroethene	7				2							20				
1,2 Dichloroethene	70			67	7	300		14				19				
Methylene Chloride	5															
1,1,1 Trichloroethane	200				1							4				
Trichloroethene	5					1		1								
Vinyl Chloride	2			58		94										

* Concentrations are based on the Risk Reduction Standards in Appendix II of 31TAC335.568 as maximum concentrations allowed in groundwater under Standard 3.

Shaded areas indicate results which exceed the referenced concentrations.

SEP 23'94 11:57 FR PSI 210 342 9401 TO 15129393357 P.03/03

Table 8
Inorganic (Water Hits Hppb)
Second Sampling Event

Parameter	Reference Conc.*	ES-1	ES-2	ES-3	ES-4	ES-5	ES-6	ES-7	ES-8	ES-9	ES-10	ES-11	ES-12	BG-1	BG-2	BG-3
Arsenic	50	3.2	8.8	192	1460	7.2	7	5.3	3.1	4.2	5.8	7.6	8	16	7.4	5.3
Barium	2,000	593	320		879	399	145	196	173	220	181	329	335	844	61.7	308
Cadmium	5															
Chromium	100	56.4	17.1	137	286	20.7	21.5	6.2	7.2	32.1	35.9	59.8	40.2	56.9		31.7
Lead	15	56.4	19.6		104	13	17.6	4	7.2	7	56.4	37.1	21.1	66.7		12.4
Mercury	2	.4		8.7	1.1									.68		
Selenium	50	5.1	2.1		9.8	4						2.6		9.2		5.3
Silver	183															

* Concentrations are based on those which appear in the Risk Reduction Standards in Appendix II of 31TAC335.568

Shaded area indicates results which exceed the referenced concentrations.

bromoform, and chlorobenzene. A 1986 characterization study by REI, Inc. discovered a floating hydrocarbon layer in the SWMU 2 area (well REI-24). The Texas Water Commission analyzed the hydrocarbon layer and found 2.2 ppm of PCB-1260. A Remedial Response Evaluation study by McClelland Consultants in 1987 found no volatile priority pollutants in groundwater samples from REI-24 or MCC-5. McClelland also found evidence suggesting the hydrocarbon layer at SWMU 2 was not laterally extensive. McClelland's vadose zone vapor study indicated oil contamination in several trenches near REI-24. During groundwater monitoring of the DPDO landfill from 1988 to 1990, several compounds were detected on a regular basis including chlorobenzene, 1,2-dichlorobenzene, 1,4-dichlorobenzene, toluene, and naphthalene. Simultaneous groundwater monitoring in the vicinity of SWMU 2 consistently identified the following contaminants: benzene, chlorobenzene, ethylbenzene, toluene, vinyl chloride, naphthalene, and lead.

Ensafe/Allen and Hoshall (February 15, 1994) has conducted the most recent studies in this area of NASCORPC. They began in April 1992 by sampling existing wells in order to clarify conditions in the shallow aquifer at the site. Widespread contamination with VOC's and BNA's was found throughout the SWMU 1 and 2 areas. Ensafe/Allen and Hoshall drilled seventeen additional soil borings which were converted to monitoring wells in the area comprising SWMU's 1,2, and 4. Also, eighteen soil samples were obtained from six hand auger borings in the SWMU 4 area. The Final Facility Investigation Report tables 4,5, and 6 contain the "hits" from the hand auger samples. Tables 7, 8, 9, and 10 show the compounds detected in soil samples. Tables 11, 12, 13, 14, 15, 16, 17, and 18 present the contaminants detected in groundwater samples from two sampling events. Significant contaminants found in soil and groundwater include cadmium, chromium, lead, PCBs, benzene, chlorobenzene, 1,2-

dichloroethene, trichloroethene, vinyl chloride, and pesticides. Figure 16 shows the lateral extent of the contamination in the surficial aquifer. Some contamination was found in the deeper, confined aquifer indicating possible contaminant migration from the shallow aquifer and communication between the two systems.

Table 4
Volatile Organic Compounds (ppb)
Soil Hits — Site 4 - Hand Auger Locations

Parameter	Reference Concentrations*	HA1-1	HA1-2	HA1-3	HA2-1	HA2-2	HA2-3	HA3-1	HA3-2	HA3-3
Acetone	1,020,000	14,000	61,000		41,000	100,000				
2-Butanone	511,000	30	30		88			35	1,900	
Benzene	500	1	3		24	72		25	200	260
Toluene	100,000	3	10		34	29		18		
Xylene	1,000,000	9	150	550	4,500	5,200	9,400	2,300	23,000	25,000
1,2 Dichloromethene	7,000									
4-Methyl-2-Pentanone	N/A		3					41		
Chlorobenzene	10,000	2	14			23		590	2,200	1,600
Ethylbenzene	70,000	6	27	380	980	1,300	2,000	460	5,200	5,400
1,1 Dichloroethane	1,020,000					8				
2-Hexanone	N/A				210			63		

Parameter	Reference Concentrations*	HA4-1	HA4-2	HA4-3	HA5-1	HA5-2	HA5-3	HA6-1	HA6-2	HA6-3
Acetone	1,020,000		10,000	23,000	15,000					
2-Butanone	511,000	5								32
Benzene	500	11		240						
Toluene	100,000				71,000	60,000	73,000	1	3	2
Xylene	1,000,000	5		230	40,000	44,000	60,000			3
1,2 Dichloroethene	7,000				3,400			10	9	2
4-Methyl-2-Pentanone	N/A									9
Chlorobenzene	10,000	12	1,500	1,400						
Ethylbenzene	70,000	23	2,600	2,300	6,900	7,100	7,300			
1,1 Dichloroethane	1,020,000									
2-Hexanone	N/A									

Notes:

* Concentrations are based on the Risk Reduction Standards in Appendix II of 31 TAC 335.568 which are considered protective of groundwater at an industrial site under Standard 2.

N/A means concentrations were not available.

Table 5
Semivolatile Organic Compounds (ppb)
Soil Hits - Site 4 - Hand Auger Locations

Parameter	Reference Concentrations*	HA1-1	HA1-2	HA1-3	HA2-1	HA2-2	HA2-3	HA3-1	HA3-2	HA3-3	HA4-1	HA4-2	HA4-3	HA5-1	HA5-2	HA5-3
Benzo(g,h,i)perylene	N/A							39	35		35			36		
Dibenzofuran	N/A									250			170		770	1,500
1,2 Dichlorobenzene	60,000			150				320	360	3,000		240				
1,4 Dichlorobenzene	7,500								62	570						
2,4 Dimethylphenol	204,000		52													
Fluorene	409,000									240		43	230		790	
Fluoranthene	409,000									140			180			
Hexachlorobenzene	100							110	74	330						
2-Methylnaphthalene	N/A				430	3,100	7,700		470	12,000	520	2,100	9,300	340	23,000	42,000
2-Methylphenol	N/A		79	180										100		
4-Methylphenol	N/A	130	170	270												
N-Nitrodiphenylamine	N/A									310					770	
Phenanthrene	N/A									500		41	640		1,200	2,000
Pyrene	310,000			160					44	150				56		
Naphthalene	409,000				1,100	4,400	9,800	120	840	12,000	490	2,200	8,200	510	13,000	38,000

Notes:

- Concentrations are based on the Risk Reduction Standards in Appendix II of 31 TAC 335.368 which are considered protective of groundwater at an industrial site under Standard 2.

N/A Means concentrations were not available.

Table 6
Inorganic Soil Hits - (ppm)
Site 4 — Hand Auger Locations

Parameter	Reference Concentrations*	HA1-1	HA1-2	HA1-3	HA2-1	HA2-2	HA2-3	HA3-1	HA3-2	HA3-3
Aluminum	N/A	2,530	2,110	1,300	5,830	1,310	821	2,580	2,180	1,410
Antimony	.6									
Arsenic	5				.78			7.3		
Barium	200	32.8	14.1	9.7	48	19.9	9.7	27.2	13.2	3.1
Beryllium	.4				.23					
Cadmium	.5	4.2	3.2	6.8	5.1	6.7	3.7	1.5		
Calcium	N/A	184,000	57,000	8,580	18,2000	34,800	23,100	116,000	43,800	13,200
Chromium	10	7.4	15.3	16.7	20.5	34.9	20.2	24.6	21.9	6.8
Cobalt	N/A									
Copper	N/A	7.3	11.7	7.9	6	5.3	3.8	4.7	2.5	1.8
Iron	N/A	1,720	1,200	1,130	3,640	749	484	1,560	840	612
Lead	1.5	48.4	95.1	123	51.3	88.8	101	61.4	25.2	9.3
Magnesium	N/A	2,650	876	204	3,450	614	246	1,220	536	228
Manganese	N/A	53.1	20	9.9	74.6	13.3	10	43.8	15.1	7.9
Nickel	10		5.7	8.7	4.5		5.8			
Potassium	N/A	714	426	188	1,730	254	141	549	305	181
Selenium	5	1.3		.58	1.3	.84	.39			
Sodium	N/A	605	182		352			452		
Vanadium	N/A	5.9	3.6	2.4	10.3	2.3	1.5	4.4	2.9	1.8
Zinc	N/A	23.5	44.1	28.5	27.7	34.1	15.3	21.6	10.3	5.8

Table 6
Inorganic Soil Hits - (ppm)
Site 4 — Hand Auger Locations

Parameter	Reference Concentrations*	HA4-1	HA4-2	HA4-3	HA5-1	HA5-2	HA5-3	HA6-1	HA6-2	HA6-3
Aluminum	N/A	3,620	4,920	3,020	4,200	1,790	1,080	10,200	8,130	6,910
Antimony	.6									
Arsenic	5				.92			1.3	1.1	1.2
Barium	200	56.3	33.3	19.5	93.8	24.9	12.2	223	234	156
Beryllium	.4							.42	.38	.36
Cadmium	.5	6.7	.84	1.5	6.7	12.4	6.2			
Calcium	N/A	184,000	90,900	29,700	72,300	13,400	6,540	90,800	135,000	114,000
Chromium	10	200	20.9	34.6	187	260	144	8.7	8.2	7.5
Cobalt	N/A	3						2.3	2.6	2.3
Copper	N/A	10.3	12.4	7	6.3	6.1	4.5	3.8	5	3.4
Iron	N/A	2,640	2,070	1,530	2,490	852	510	5,610	4,670	4,110
Lead	1.5	503	55.3	50.5	169	346	109	4.2	6.5	5.1
Magnesium	N/A	2,650	1,140	585	1,460	277	146	4,260	3,530	2,820
Manganese	N/A	129	42.4	24	67.2	41	22	94.9	197	135
Nickel	10				5.8	6.1			5.8	
Potassium	N/A	1,000	819	541	1,160	440	291	2,580	2,120	1,820
Selenium	5	.35			.23			.3	.37	
Sodium	N/A	539	394		212			304	318	280
Vanadium	N/A	6.5	5.7	4	7.1	2.1	1.2	15.6	16.4	11.8
Zinc	N/A	350	45.9	77.5	61.7	56.5	20.1	16.9	15.1	10.9

Note: * Concentrations are based on the Risk Reduction Standards in Appendix II of 31 TAC 335.368 which are considered protective of groundwater at an industrial site under Standard 2.
N/A means concentrations were not available.

Table 7
Volatile Organic Compounds (ppb)
Soil Hits - Sites 1, 3 and 4 - Soil Boring Locations

Parameter	Reference Concentrations*	ES31-2	ES33-2	ES34-1	ES34-3	ES35-2	ES35-3	ES36-2	ES37-2
Acetone	1,020,000	15,000	89		5,600			810	
2-Butanone	511,000		6			120	1		5
Benzene	500		1		1				
Toluene	100,000			12					3
Xylene	1,000,000								3
4-Methyl-2-Pentanone	N/A								
Chlorobenzene	10,000				6			33	
Ethylbenzene	70,000								

Parameter	Reference Concentrations*	ES40-6	ES41-3	ES41-10	ES42-3	ES43-1	ES43-2	ES43-11	ES44-2	ES45-1	ES46-3	ES47-3
Acetone	1,020,000		2,800	3,200	3,500		11,000					82,000
2-Butanone	511,000	4			1,000						450	
Benzene	500							2				
Toluene	100,000					2			16	3		
Xylene	1,000,000								56			
4-Methyl-2-Pentanone	N/A					3						
Chlorobenzene	10,000	2							310		470	
Ethylbenzene	70,000								14			

Notes:

- Concentrations are based on the Risk Reduction Standards in Appendix II of 31 TAC 335.568 which are considered protective of groundwater at an industrial site under Standard 2.

N/A means concentrations were not available.

Table 8
Semivolatile Organic Compounds (ppb)
Soil Hits — Sites 1, 3, and 4 - Soil Boring Locations

Parameter	Reference Concentrations*	ES34-1	ES34-3	ES36-2	ES44-2	ES46-3
Anthracene	3,070,000	46				
Benzo(a)anthracene	N/A	260	43			
Benzo(b)fluoranthene	N/A	430	47			
Benzo(g,h,i)perylene	N/A	140				
Benzo(a)pyrene	N/A	250				
Benzo(k)flouranthene	N/A	230				
Dibenzo(a,h)anthracene	N/A	70				
1,4 Dichlorobenzene	7,500					170
Indeno(1,2,3-cd)pyrene	N/A	200				
2-Methylnaphthalene	N/A			190	660	1,600
4-Methylphenol	N/A					
Chrysene	N/A	290	55			
Fluoranthene	409,000	420	61	43		
Pyrene	310,000	360	54		250	
Naphthalene	409,000			140		2,600
Phenanthrene	N/A	190		51		110

Notes:
- Concentrations are based on the Risk Reductions Standards in Appendix II of 31 TAC 335.368 which are considered protective of groundwater at an industrial site under Standard.

N/A means concentrations were not available.

Table 9
PCB — Soil Hits (ppb)
Sites 1, 3, and 4 — Soil Boring Locations

Parameters	Reference Concentrations*	ES34-1	ES36-2	ES43-1	ES43-2	ES45-1	ES46-3	ES47-3
Aroclor 1242	50		210					
Aroclor 1248	50						1,400	
Aroclor 1260	50	89	49	29	19	49	510	36

Notes:
Concentrations are based on Risk Reduction Standards in Appendix II of 31 TAC 335.368 for Polychlorinated BiPhenyls, which are considered protective of groundwater at an industrial site under Standard 2.

Table 10
Inorganic Soil Hits (ppm)
Sites 1, 3, and 4 Soil Boring Locations

Parameter	Reference Concentrations*	ES31-6	ES32-2	ES33-2	ES34-1	ES34-3	ES35-2	ES36-3	ES36-2	ES37-2	ES38-2	ES39-2	ES39-4	ES40-2	ES40-4	ES41-3	ES41-10	ES42-3	ES43-1	ES43-2	ES43-11	ES44-2	ES44-9	ES45-1	ES46-3	ES47-3
Aluminum	N/A	234	357	711	4,650	742	289	2,810	1,230	297	349	355	5,090	438	1,630	638	2,590	382	909	741	3,380	339	4,590	1,520	596	821
Arsenic	5				6.7				3.1	2.7																
Barium	200	2.7	4	7.6	134	7.8	2.1	47.8	38.7	1.2	3.7	2.2	16.9	3.5	10	3.3	11.8	2.8	6.9	4.5	34	3.5	46.3	20.4	5.7	6.8
Beryllium	.4							.35					.51								.31		.42			
Cadmium	.5				2.4				46				1										1.4	3.7	2.6	2.3
Calcium	N/A		77.3	37,300	64,000	6,060	123	1,180	3,480	145	344	126	2,410	1,870	424	204	317	98.6	1,240	871	1,500	99.2	5,650	22,900	4,680	321
Chromium	10		4.5	3.1	27.6	2.8	1.7	2.8	5.4			2.5	5.9	1.4	1.3	1.4	3.7		2.9	4	4.2	1.2	3.6	13.5	5.5	7.6
Cobalt	N/A				3.1								4.4													
Copper	N/A	.83	.89	3.1	147	2.5	1.2	2.6	7.8			1.3	5.5	1.4	.99	.87	2		3.3	1.3	6.3	.78	2.8	6.1	6.6	4
Iron	N/A	160	446	575	5,940	721	134	1,520	2,710	73.7	533	173	2,810	281	498	384	1,080	130	500	390	2,160	92	4,240	969	508	377
Lead	1.6		1.2	17.2	1,020	7.1	.61	3	14.8			.74	8.6			1.1	2.2	.78	17	1.7	3.7	2.1	3.1	21.8	46.1	25.8
Magnesium	N/A		24.9	514	2,030	240	24.6	591	220			27.6	1,060		213	70.2	285	35.9	118	63.2	511	25.5	1,220	689	109	54.1
Manganese	N/A	.86	2.2	30.6	123	13.2	.78	5	32.1	.46	2.9	1.3	15.7	3.1	2.2	6.3	4.5	.87	10.1	5.3	12.7	.87	39.9	33.3	4.7	3.2
Mercury	.2																							.12	.14	
Nickel	10				11																			6.4		
Potassium	N/A			192	962	209		707	116		224		1,280				325		141	88.9	785		1,310	371		106
Selenium	5				.58			.26					.38													
Sodium	N/A			378	309			258					299										359			
Vanadium	N/A		1.4	1.8	7.9	1.6	.9	6.5	2.1	.77	1.7	.84	6.8	.8	2.7	1.1	3.6		1.3	1.2	6.3		6.6	3.1	1.1	1.3
Zinc	N/A			11.2	757				90	1.5	3.5		242	3.8	5.6				14.9				13.4	25.1	27.4	18.4

Table 11
Volatile Organic Compounds (ppb)
Water Hits — Sites 1, 3, and 4 Monitoring Wells
Initial Sampling Event

Parameter	Reference Concentrations*	ES-33	ES-36	ES-37	ES-38	ES-40	ES-43	ES-44	ES-45	ES-46	ES-47
Acetone	3,650										1,100
Benzene	5		29			3				120	49
2-Butanone	1,830			110							
Chlorobenzene	100	14	490	32	1	55			3	320	270
Chloromethane	5						3				
1,1-Dichloroethane	3,650			5							
1,1-Dichloroethene	7			3							
1,2-Dichloroethene	70			1,500				2			
Trichloroethene	5		30					1			
Vinyl Chloride	2			2,400				6			
Toluene	100			1							

Notes:
* Concentrations are based on the Risk Reduction Standards in Appendix II of 31 TAC 335.568 as maximum concentrations allowed in groundwater under Standard 2.
N/A means concentrations were not available.

Table 12
Semivolatile Organic Compounds (ppb)
Water Hits — Sites 1, 3, and 4 — Monitoring Wells

Parameter	Reference Concentrations*	ES-36	ES-37	ES-38	ES-39	ES-40	ES-45	ES-46	ES-47
1,2-Dichlorobenzene	600		15						8
1,3-Dichlorobenzene	600								1
1,4-Dichlorobenzene	75	21				13	1	30	27
2,4-Dimethylphenol	730							120	22
2-Chlorophenol	183	3							2
2-Methylnaphthalene	N/A	6						21	33
4-Methylphenol	N/A								5
Fluorene	1,460								1
Naphthalene	1,460	19				2	9	110	46
Penanthrene	N/A								1
Phenol	21,900								3
N-Nitrosodiphenylamine	N/A	2							
bis(2-Ethylhexyl)phthalate	6.08			2					
Carbazole	N/A				2				

Notes:
* Concentrations are based on the Risk Reduction Standards in Appendix II of 31 TAC 335.568 as maximum concentrations allowed in groundwater under Standard 2. N/A means concentrations were not available.

Table 13
PCBs/Pesticides (ppb)
Water Hits — Sites 1 and 4 - Monitoring Wells

Parameter	Reference Concentrations*	ES-36	ES-45	ES-46	ES-47
Aroclor 1248	.5	.85			
Aroclor 1254	.5				1.1
4,4'-DDD	.355	.044		.11	23
4,4'-DDT	.25			.29	.066
Dieldrin	.00532		.042		
Endosulfan I	1.83	.039	.045		.15
Endosulfan II	N/A				.043
gamma-Chlordane	2				.059

Notes:
- Concentrations are based on the Risk Reduction Standards in Appendix II of 31 TAC 335.568 as maximum concentrations allowed in groundwater under Standard 2.

N/A means concentrations were not available. Aroclor 1248 and Aroclor 1254 are PCB constituents.

Table 14
PCBs/Pesticides (ppb)
Water Hits — Sites 1 & 4 — Monitoring Wells
Sampling Event

Parameter	Reference Concentrations*	ES-36	ES-45	ES-46	ES-47
Aroclor 1248	.5	.85			
Aroclor 1254	.5				1.1
4,4'-DDD	.355	.044		.11	23
4,4'-DDT	.25			.29	.066
Dieldrin	.00532		.042		
Endosulfan I	1.83	.039	.045		.15
Endosulfan II	N/A				.043
gamma-Chlordane	2				.059

Notes:
- Concentrations are based on the Risk Reduction Standards in Appendix II of 31 TAC 335.568 as maximum concentrations allowed in groundwater under Standard 2.

N/A means concentrations were not available. Aroclor 1248 and Aroclor 1254 are PCB constituents.

Table 14-A
Inorganic Water Hits (ppb)
Sites 1, 3, and 4 — Monitoring Wells

Parameter	Reference Concentrations*	Filtered or Non-Filtered	ES-31	ES-32	ES-33	ES-34	ES-35	ES-36	ES-37	ES-38	ES-39
Aluminum	N/A	Filtered	150								
		Non-Filtered	30,200	75,000	30,400	37,300		18,800	29,600	10,700	1,800
Arsenic	50	Filtered	3.8		7.8		3.2	20.2	5.1	9.2	
		Non-Filtered	7.6	11	10	9.8		33.3	5.4	9.2	
Barium	2,000	Filtered	45.3	149	796		258	1,300		321	166
		Non-Filtered	766	458	1,340	330		1,660	349	419	109
Beryllium	4	Filtered									
		Non-Filtered	1.3	3.7	1.1	1.7		1.2	2.6		
Cadmium	5	Filtered									
		Non-Filtered						10.5			
Calcium	N/A	Filtered	21,400	130,000	302,000		90,600	148,000	72,000	102,000	157,000
		Non-Filtered	26,600	250,000	292,000	183,000		148,000	89,600	98,500	70,700
Chromium	100	Filtered									
		Non-Filtered	22.8	68	21.3	32.1		28.8	14.1	8.6	10.9
Cobalt	N/A	Filtered						9.2			
		No-Filtered	9.6	28.1	8.3	12.1		14.4	7.1	5.5	
Copper	N/A	Filtered			19.2		3.9				
		Non-Filtered	19.3	53.4	33.7	28.9		49.9	23.2	9.4	
Iron	N/A	Filtered	1,520		1,980			18,900	3,150	7,040	
		Non-Filtered	13,100	53,000	13,900	25,500		32,700	7,260	11,400	1,640
Lead	15	Filtered							6.4	17.2	
		Non-Filtered	23.2	32.6	38.9	26		116	47.5	5.8	2.6

Table 14-A
Inorganic Water Hits (ppb)
Sites 1, 3, and 4 — Monitoring Wells

Parameter	Reference Concentration*	Filtered or Non-Filtered	ES-31	ES-32	ES-33	ES-34	ES-35	ES-36	ES-37	ES-38	ES-39
Magnesium	N/A	Filtered	4,270	25,700	110,000		14,400	48,700	15,300	26,600	18,400
		Non-Filtered	6,710	43,000	101,000	33,800		49,900	19,300	27,400	12,600
Manganese	N/A	Filtered	303	423	1,050		86.7	637	146	325	383
		Non-Filtered	372	1,130	1,020	746		719	200	412	145
Mercury	2	Filtered									
		Non-Filtered									
Nickel	100	Filtered									
		Non-Filtered	11	51.4	23.3			19.2			
Potassium	N/A	Filtered	2,380	8,400	42,900		64,800	55,400	3,850	8,630	108,000
		Non-Filtered	7,360	26,500	46,000	75,100		57,500	6,440	10,300	195,000
Selenium	50	Filtered									
		Non-Filtered			2.6						
Sodium	N/A	Filtered	44,700	476,000	225,000		362,000	123,000	67,800	131,000	200,000
		Non-Filtered	41,800	499,000	202,000	481,000		128,000	74,900	149,000	196,000
Vanadium	N/A	Filtered	4	3.3			4.[illegible]	5.6			
		Non-Filtered	34.3	103	26	47.4		26.2	34.4	15.5	6.4
Zinc	N/A	Filtered	9.9	10.2	50.8		28.1	13.9			21.6
		Non-Filtered	40.8	167	197	89.4		309	25.5	19.7	

Notes:
* Concentrations are based on the Risk Reduction Standards in Appendix II of 31 TAC 335.368 as maximum concentrations allowed in groundwater under Standard 2.
N/A means concentrations were not available.

Table 14-8
Inorganic Water Hits (ppb)
Sites 1, 3, & 4 — Monitoring Wells

Parameter	Reference Concentrations*	Filtered or Non-Filtered	ES-40	ES-41	ES-42	ES-43	ES-44	ES-45	ES-46	ES-47
Aluminum	N/A	Filtered								
		Non-Filtered	37,300	23,200	25,000	6,280	14,900	26,600	6,440	6,470
Arsenic	50	Filtered	11.1	3.6		3	9.9	5.9	12.2	10.3
		Non-Filtered	15.8	6.1	3.8	4.4	11.9	10.8	11	10.4
Barium	2,000	Filtered	334	254	69.4	528		704	957	1,690
		Non-Filtered	435	438	213	590	127	943	1,070	1,700
Beryllium	4	Filtered								
		Non-Filtered	2.2	2.2			1.2	1.1	1.5	
Cadmium	5	Filtered						59.9		
		Non-Filtered		5.4					66.3	29.3
Calcium	N/A	Filtered	111,000	95,000	62,100	198,000	58,900	175,000	245,000	295,000
		Non-Filtered	104,000	122,000	64,400	258,000	56,300	211,000	246,000	281,000
Chromium	100	Filtered								8.8
		Non-Filtered	28.6	22.7	12.9	6.2	12.1	50.9	35	23.1
Cobalt	N/A	Filtered	6.2					5.8	7.6	
		Non-Filtered	19				6.2			
Copper	N/A	Filtered	8	6.2	3.3	4.5		6.2		9.1
		Non-Filtered	28.6				12.9	299		
Iron	N/A	Filtered	6,480				933	22,000	33,100	39,700
		Non-Filtered	31,800	21,300	6,070	4,140	11,000	44,300	48,100	44,900
Lead	15	Filtered								
		Non-Filtered	17.6	23	8.6		6.2	466	100	258

Table 14-B
Inorganic Water Hits (ppb)
Sites 1, 3, & 4 — Monitoring Wells

Parameter	Reference Concentrations*	Filtered or Non-Filtered	ES-40	ES-41	ES-42	ES-43	ES-44	ES-45	ES-46	ES-47
Magnesium	N/A	Filtered	30,900	11,500	10,000	19,400	11,800	42,600	25,800	58,200
		Non-Filtered	33,400	17,300	10,800	20,700	13,900	50,000	24,800	56,900
Manganese	N/A	Filtered	199	287	34.2	457	93.2	1,740	5,590	986
		Non-Filtered	255	574	34.6	790	127	2,020	6,970	981
Mercury	2	Filtered								
		Non-Filtered						.43	3.9	
Nickel	100	Filtered	16.9					13.9	15.2	
		Non-Filtered		19			11.6	38.4	34.4	
Potassium	N/A	Filtered	21,700	6,100	7,700	9,080	5,150	19,900	22,700	52,000
		Non-Filtered	27,100	12,400	10,200	9,480	7,950	25,800	22,800	54,400
Selenium	50	Filtered								
		Non-Filtered								
Sodium	N/A	Filtered	160,000	159,000	39,000	294,000	192,000	60,800	50,500	99,400
		Non-Filtered	152,000	163,000	37,500	289,000	187,000	68,200	47,400	93,500
Vanadium	N/A	Filtered								
		Non-Filtered	54.2	52.1	17.3	13.4	27.1	34.5	15	9
Zinc	N/A	Filtered	11.9		7.3	10.5			133	13
		Non-Filtered	110	100			40.9	524	4,510	197

Notes:
* Concentrations are based on the Risk Reduction Standards in Appendix II of 31 TAC 335.368 as maximum concentrations allowed in groundwater under Standard 2.
N/A means concentrations were not available. Table 14-A
Inorganic Water Hits (ppb) Sites 1, 3, and 4 - Monitoring Wells

Table 15
Volatile Organic Compounds (ppb)
Water Hits — Sites 1, 3, and 4 Monitoring Wells
Second Sampling Event

Parameter	Reference Concentrations*	ES-32	ES-33	ES-35	ES-36	ES-37	ES-38	ES-39	ES-40	ES-41	ES-44	ES-45	ES-47
Acetone	3,650				12							11	
Benzene	5		1		19			9	3			12	10
2-Butanone	1,830								4				
Carbon Disulfide	3,650							3		3			
Chlorobenzene	100	9	46		270	28	2		55			9	180
Chloromethane	5												
1,1-Dichloroethane	3,650					6			5				
1,1-Dichloroethene	7					3							
1,2-Dichloroethene	70					880					41		1
Tetrachloroethene	5	160		92				37					
Trichloroethene	5	12		6							49		
Vinyl Chloride	2					2,200					13		
Toluene	100					2							
2-Hexanone	N/A		6										

Notes:
* Concentrations are based on the Risk Reduction Standards in Appendix II of 31 TAC 335.568 as maximum concentrations allowed in groundwater under Standard 2.
N/A means concentrations were not available.

Table 16
Semivolatile Organic Compounds (ppb)
Water Hits — Sites 1, 3, and 4 — Monitoring Wells
Second Sampling Event

Parameter	Reference Concentrations*	ES-31	ES-32	ES-34	ES-36	ES-37	ES-40	ES-41	ES-45	ES-46	ES-47
1,2-Dichlorobenzene	600					21				9	
1,3-Dichlorobenzene	600										1
1,4-Dichlorobenzene	75				24	1	13			40	22
2,4-Dimethylphenol	730									89	
2-Chlorophenol	183				2						
2-Methylnaphthalene	N/A				9				2	17	33
4-Methylphenol	N/A									20	
Fluorene	1,460				1						2
Naphthalene	1,460				28				25	110	26
Penanthrene	N/A				1				2		2
Phenol	21,900										
N-Nitrosodiphenylamine	N/A										4
bis (2-Ethylhexy)phtate		2	1	3				5			
bis(2-Ethylhexy)phthalate	6.08				2				6	12	
Carbazole	N/A										

Notes:
* Concentrations are based on the Risk Reduction Standards in Appendix II of 31 TAC 335.568 as maximum concentrations allowed in groundwater under Standard 2.
N/A means concentrations were not available.

Table 17
PCBs/Pesticides (ppb)
Water Hits — Sites 1 and 4 — Monitoring Wells
Second Sampling Event

Parameter	Reference Concentrations*	ES-46	ES-47
Aldrin	.00501	.043	
Aroclor 1248	.5		
alpha-BHC	N/A	.037	
Aroclor 1254	.5		
4,4'-DDD	.355	.11	.43
4,4'-DDE	.25		.025
4,4'-DDT	.25	.29	
delta-BHC	N/A	.039	
Dieldrin	.00532		
Endosulfan I	1.83		
Endosulfan II	N/A		
gamma-Chlordane	2		
Heptachlor	.4	.039	

Notes:

* Concentrations are based on the Risk Reduction Standards in Appendix II of 31 TAC 335.568 as maximum concentrations allowed in groundwater under Standard 2.

N/A means concentrations were not available. Aroclor 1248 and Aroclor 1254 are PCB constituents.

Table 18-A
Inorganic Water Hits (ppb)
Sites 1, 3, and 4 — Monitoring Wells
Second Sampling Event

Parameter	Reference Concentrations*	Filtered or Non-Filtered	ES-31	ES-32	ES-33	ES-34	ES-35	ES-36	ES-37	ES-38	ES-39
Aluminum	N/A	Filtered	1,170								
		Non-Filtered	38,600	21,300	33,800	42,200	12,800	1,220	18,300	65,000	1,040
Arsenic	50	Filtered	5	3.6	4.6	2.7	2	23.3	3.4	9.2	
		Non-Filtered			4.7	11.2	4.3	26.6	4.8	10.1	
Barium	2,000	Filtered		163	1,800	215	89.3	876	80.3	406	91.5
		Non-Filtered	924	311	2,000	368	266	1,060	233	801	76.4
Beryllium	4	Filtered									
		Non-Filtered	2.4	1.6	1.4	1.8			1.7	2.7	
Cadmium	5	Filtered									
		Non-Filtered									
Calcium	N/A	Filtered	24,300	137,000	241,000	131,000	100,000	127,000	69,100	118,000	78,700
		Non-Filtered	34,100	206,000	257,000	220,000	158,000	115,000	76,600	127,000	57,200
Chromium	100	Filtered	4.4	4.4							
		Non-Filtered	26.4	47	18.3	32.6	17.4	6.4	8.2	38.5	18.9
Cobalt	N/A	Filtered									
		No-Filtered	15.2	11.7	17.5	12.5	8.8	8.2	5.8	18.7	
Copper	N/A	Filtered		6.6			3.9				
		Non-Filtered	36.6	34.7		27				27	
Iron	N/A	Filtered	1,980	29.9	5,430			12,700	2,280	8,890	
		Non-Filtered	15,300	16,900	18,200	27,200		18,200	7,390	36,700	1,010
Lead	15	Filtered	2.8				10,700				
		Non-Filtered	44.5		34.6	21.9		116	11	24.1	2.6
Magnesium	N/A	Filtered	4,850	25,300	98,000	25,500	13,400	54,300	15,200	32,700	11,300
		Non-Filtered	8,010	32,300	100,000	35,900	18,900	53,000	17,300	38,200	13,000

Table 18-A
Inorganic Water Hits (ppb)
Sites 1, 3, and 4 — Monitoring Wells
Second Sampling Event

Parameter	Reference Concentrations*	Filtered or Non-Filtered	ES-31	ES-32	ES-33	ES-34	ES-35	ES-36	ES-37	ES-38	ES-39
Manganese	N/A	Filtered	375	375	687	287	47.9	285	40.2	356	147
		Non-Filtered	462	796	702	821	245	287	56.2	445	148
Mercury	2	Filtered									
		Non-Filtered									
Nickel	100	Filtered						15.8		26.6	
		Non-Filtered	16.8	42			62,800	75,000	5,180	10,300	228,000
Potassium	N/A	Filtered	3,010	9,410	45,700	41,100	66,300	71,500	6,840	17,200	276,000
		Non-Filtered	8,320	15,500	49,900	50,000				2.6	
Selenium	50	Filtered			2.4	3.1				5	
		Non-Filtered	2		3.8		2.4				
Sodium	N/A	Filtered	46,206	486,000	210,000	495,000	375,000	180,000	90,500	155,000	202,000
		Non-Filtered	47,100	47,700	217,000	488,000	379,000	168,000	90,600	154,000	211,000
Vanadium	N/A	Filtered				3.3					
		Non-Filtered	52.2	39.2	30.1	53.9	24.8		21.6	71	3.3
Zinc	N/A	Filtered									
		Non-Filtered	56.5	64.6	165	92.9		76.9		77.5	22.3

Notes:
* Concentrations are based on the Risk Reduction Standards in Appendix II of 31 TAC 335.368 as maximum concentrations allowed in groundwater under Standard 2.
N/A means concentrations were not available.

Table 18-8
Inorganic Water Hits (ppb)
Sites 1, 3, & 4 — Monitoring Wells
Second Sampling Event

Parameter	Reference Concentrations*	Filtered or Non-Filtered	ES-40	ES-41	ES-42	ES-43	ES-44	ES-45	ES-46	ES-47
Aluminum	N/A	Filtered							23.5	
		Non-Filtered	2,210	7,290	11,500	23,000	7,190	33,100	15,800	5,350
Arsenic	50	Filtered	15.4	2.2			11.7	4.7	7.2	
		Non-Filtered	12	6.9	2.4	12.2	15.2	13.9	14.7	
Barium	2,000	Filtered	312	241	76.9		75.6	1,010	1,180	598
		Non-Filtered	284	276	156	640	103	2,290	1,260	648
Beryllium	4	Filtered								
		Non-Filtered				1.4		2.4		
Cadmium	5	Filtered								
		Non-Filtered						187	50.1	40.6
Calcium	N/A	Filtered	114,000	82,800	54,400		48,700	201,000	216,000	109,000
		Non-Filtered	111,000	87,300	58,800	268,000	51,200	432,000	237,000	123,000
Chromium	100	Filtered								
		Non-Filtered		4.3	5.5	18.2	5.4	67.2	51.1	23.6
Cobalt	N/A	Filtered								
		Non-Filtered	11	3.1	5	11.5	3.7	17.6	10.8	5.2
Copper	N/A	Filtered						4.5		
		Non-Filtered		13.1		21.2		346	96.5	45.2
Iron	N/A	Filtered	5,790				1,210	7,960	27,900	16,700
		Non-Filtered	7,700	5,920	3,220	18,200	6,750	60,100	44,600	29,700
Lead	15	Filtered								
		Non-Filtered	2.5	4.4	6.2	16.8	4.1			

Table 18-B
Inorganic Water Hits (ppb)
Sites 1, 3, & 4 — Monitoring Wells
Second Sampling Event

Parameter	Reference Concentrations*	Filtered or Non-Filtered	ES-40	ES-41	ES-42	ES-43	ES-44	ES-45	ES-46	ES-47
Magnesium	N/A	Filtered	30,200	10,200	9,910	12,400		62,800	28,200	5,830
		Non-Filtered	28,700	11,700	10,400	25,900	13,900	71,900	28,400	6,260
Manganese	N/A	Filtered	211	299	503		81.3	1,210	3,150	372
		Non-Filtered	181	334	46.4	842	91.8	2,630	3,620	438
Mercury	2	Filtered								
		Non-Filtered						2.2	2.7	.4
Nickel	100	Filtered								
		Non-Filtered						52.5	23.4	23.7
Potassium	N/A	Filtered	22,600	5,400	9,410		5,700	40,200	30,100	6,620
		Non-Filtered	21,500	6,900	10,200	13,900	7,070	45,300	30,800	7,690
Selenium	50	Filtered			2.3				2.8	
		Non-Filtered	2.8						2.3	
Sodium	N/A	Filtered	134,000	134,000	47,900		196,000	145,000	60,500	18,200
		Non-Filtered	140,000	133,000	47,400	301,000	204,000	145,000	60,800	19,100
Vanadium	N/A	Filtered								
		Non-Filtered	4.1	13.4	10.8	36.3	14.4	56.4		
Zinc	N/A	Filtered							174	
		Non-Filtered		30.9		58.1		2,040	2,360	398

Notes:
* Concentrations are based on the Risk Reduction Standards in Appendix II of 31 TAC 335.368 as maximum concentrations allowed in groundwater under Standard 2.
N/A means concentrations were not available.

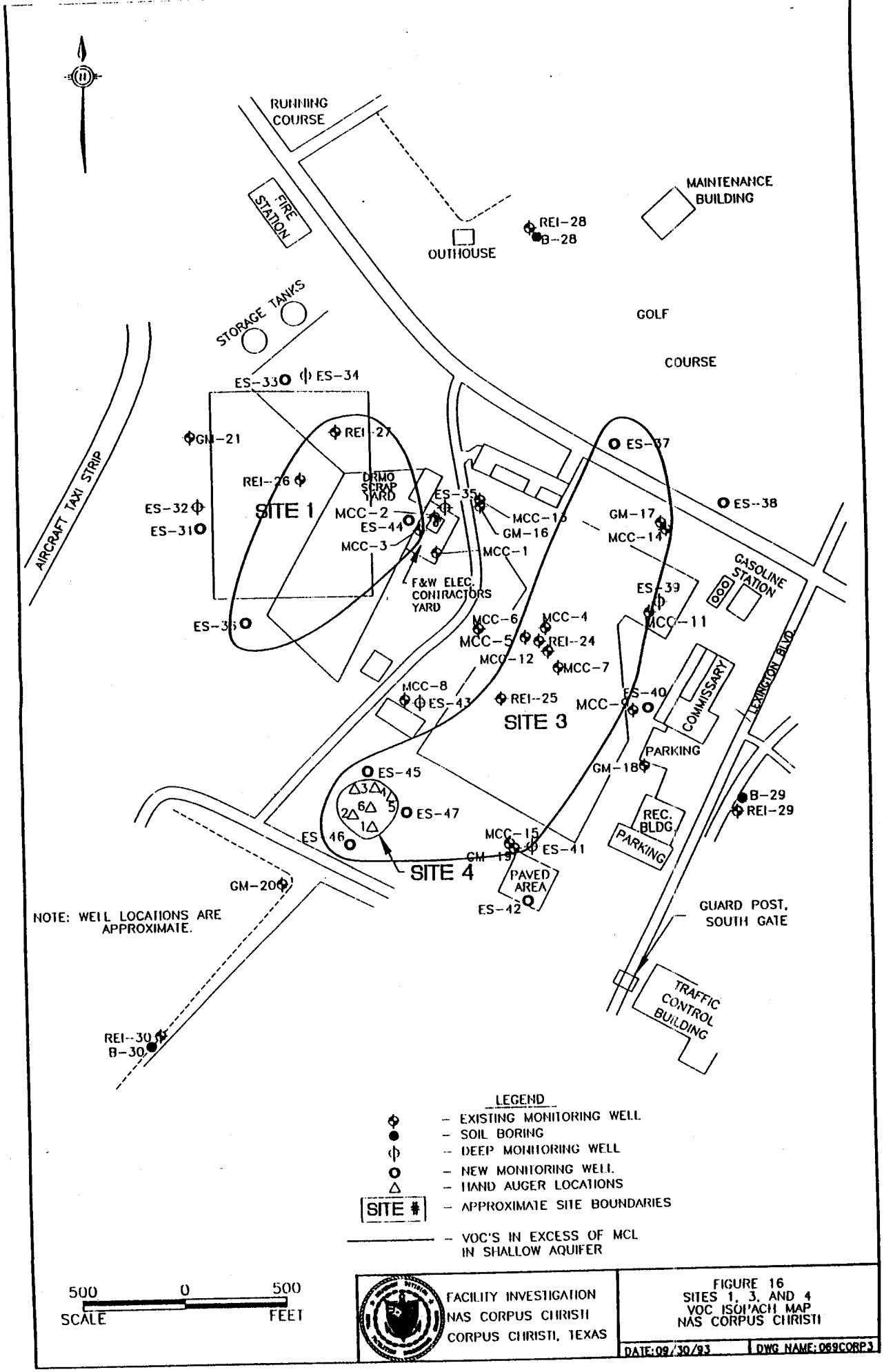
RUNNING COURSE
FIRE STATION
MAINTENANCE BUILDING
REI-28
B-28
OUTHOUSE
STORAGE TANKS
GOLF COURSE
ES-33
ES-34
GM-21
REI-27
ES-37
AIRCRAFT TAXI STRIP
REI-26
DRMO SCRAP YARD
ES-35
ES-38
ES-32
SITE 1
MCC-2
ES-44
MCC-16
GM-16
GM-17
MCC-14
ES-31
MCC-3
MCC-1
F&W ELEC. CONTRACTORS YARD
GASOLINE STATION
ES-39
ES-36
MCC-6
MCC-4
MCC-11
MCC-5
REI-24
MCC-12
MCC-7
LEXINGTON BLVD.
MCC-8
ES-43
REI-25
ES-40
COMMISSARY
SITE 3
PARKING
GM-18
ES-45
B-29
REI-29
ES-47
REC. BLDG.
ES-46
MCC-15
ES-41
PARKING
GM-19
SITE 4
PAVED AREA
GM-20
ES-42
NOTE: WELL LOCATIONS ARE APPROXIMATE.
GUARD POST, SOUTH GATE
TRAFFIC CONTROL BUILDING
REI-30
B-30
LEGEND
– EXISTING MONITORING WELL
– SOIL BORING
– DEEP MONITORING WELL
– NEW MONITORING WELL
– HAND AUGER LOCATIONS
SITE # – APPROXIMATE SITE BOUNDARIES
– VOC'S IN EXCESS OF MCL IN SHALLOW AQUIFER
500 0 500
SCALE FEET
FACILITY INVESTIGATION
NAS CORPUS CHRISTI
CORPUS CHRISTI, TEXAS
FIGURE 16
SITES 1, 3, AND 4
VOC ISOPACH MAP
NAS CORPUS CHRISTI
DATE: 09/30/93
DWG NAME: 069CORP3

APPENDIX B

DESCRIPTION OF INDUSTRIAL WASTEWATER TREATMENT PLANT

EXHIBIT 5.20: INDUSTRIAL TREATMENT PROCESS UNITS

SWMU No.	Unit Name	Unit Design Description	Waste Managed	Period of Operation	Release Controls	Photo
334	IWTP Lift Station #1	Dimension 4' by 10'; pumping capacity 200 gpm	Industrial wastewater from CCAD after pretreatment	1975 through present	Spill containment tank	2-24
335	IWTP Lift Station #2	Dimension 4' by 10'; pumping capacity 200 gpm	Industrial wastewater from CCAD after pretreatment	1975 through present	Spill containment tank	2-24
336	Wastewater Spill Containment Tank	250,000 gallon capacity; 1/4" plate steel	Industrial wastewater from CCAD with or without pretreatment	Start-up date 1980 through present	Not applicable	1-24
337	Batch Phenol Destruction Unit	Approximately 500-gallon capacity	Phenolic waste from CCAD in the past	Start-up date 1975; not currently active	None	2-
338	Batch Cyanide Destruction Unit	800 gals. per batch with a chlorine feed capacity of 1000 lbs/day	Cyanide waste	Start-up date 1975; not currently active	None	
339	Aerated Grit Chamber	8'W x 12.5'L x 10'; constructed of steel with cathodic protection	Industrial Wastewater	1975 through present	Spill containment tank	1-20
340	Grit Storage Area	Not applicable	Grit from Aerated Grit Chamber	Start-up date 1975; not currently active	Not applicable	
341	Equalization Tank	Design capacity 250,000; steel with cathodic protection; 55' diameter x 14' deep; 5"	Industrial wastewater	1975 through present	Spill containment tank controls excess wastewater before entering into the IWTP	1-23
342	Wastewater Storage Tank	250,000 gallon capacity	Industrial wastewater	1975 through present	Spill containment tank controls excess wastewater before entering into the IWTP	1-22

1792E-CH

Source: A.T. Kearney, Inc.
Exhibit 5.20

EXHIBIT 5.20: INDUSTRIAL WAS EATMENT PROCESS UNITS
(Cont'd.)

SWMU No.	Unit Name	Unit Design Description	Waste Managed	Period of Operation	Release Controls	Photo
343	Contact Chamber	88,000 gallons capacity; air flow rate 585 cfm; concrete and steel	Sludge and wastewater	1975 through present	Spill containment tank controls excess waste-water before entering into the IWTP	
344	Reaeration Chamber	117,400 gals. capacity; air flow rate 875 cfm	Sludge and wastewater	1975 through present	Spill containment tank controls excess waste-water before entering into the IWTP	1-26
345	Clarifier	142,680 gallons; surface area 1590 sq.ft.; concrete cast	Mixed liquer from Contact Chamber	1975 through present	Spill containment tank controls excess waste-water before entering into the IWTP	1-27
346	Chlorination Chamber	4,035 cu.ft. capacity; 100 lbs/day of chlorine	Industrial wastewater	1975 through present	Spill containment tank controls excess waste-water before entering into the IWTP	1-28
347	Aerobic Digester	117,500 gals. capacity	Sludge from the Rearation Chamber	1975 through present	Spill containment tank controls excess waste-water before entering into the IWTP	
348	Oil Concentrator	Design capacity 1,000 gallons	Industrial wastewater	Start-up date 1975; not currently active	Manually operated	1-21
348A	Oil Storage Area	250,000 gallon capacity	Oil skimmed from the Oil Concentrator	1975 through present	Spill containment tank controls excess waste-water before entering into the IWTP	

1792E-CH

Source: A.T. Kearney, Inc.
Exhibit 5.20

APPENDIX C

SAMPLE HANDLING GUIDELINES

TABLE 4-1

SAMPLING AND PRESERVATION PROCEDURES FOR DETECTION MONITORING[a]

Parameter	Recommended Container[b]	Preservative	Maximum Holding Time	Minimum Volume Required for Analysis
		Indicators of Ground-Water Contamination[c]		
pH	T, P, G	Field determined	None	25 ml
Specific conductance	T, P, G	Field determined	None	100 ml
TOC	G, amber, T-lined cap[e]	Cool 4°C,[d] HCl to pH <2	28 days	4 x 15 ml
TOX	G, amber, T-lined septa or caps	Cool 4°C, add 1 ml of 1.1M sodium sulfite	7 days	4 x 15 ml
		Ground-Water Quality Characteristics		
Chloride	T, P, G	4°C	28 days	50 ml
Iron Manganese Sodium	T, P	Field acidified to pH <2 with HNO_3	6 months	200 ml
Phenols	G	4°C/H_2SO_4 to pH <2	28 days	500 ml
Sulfate	T, P, G	Cool, 4°C	28 days	50 ml
		EPA Interim Drinking Water Characteristics		
Arsenic Barium Cadmium Chromium Lead Mercury Selenium Silver	T, P Dark Bottle	Total Metals Field acidified to pH <2 with HNO_3 Dissolved Metals 1. Field filtration (0.45 micron) 2. Acidify to pH <2 with HNO_3	6 months 6 months	1,000 ml 1,000 ml
Fluoride	T, P	Cool, 4°C	28 days	300 ml
Nitrate/Nitrite	T, P, G	4°C/H_2SO_4 to pH <2	14 days	1,000 ml

(Continued)

Source: U.S. EPA Ground Water Monitoring Technical Enforcement Guidance Document, September 1986

TABLE 4-1 (Continued)

SAMPLING AND PRESERVATION PROCEDURES FOR DETECTION MONITORING

Parameter	Recommended Container[b]	Preservative	Maximum Holding Time	Minimum Volume Required for Analysis
Endrin Lindane Methoxychlor Toxaphene 2,4 D 2,4,5 TP Silvex	T, G	Cool, 4°C	7 days	2,000 ml
Radium Gross Alpha Gross Beta	P, G	Field acidified to pH <2 with HNO_3	6 months	1 gallon
Coliform bacteria	PP, G (sterilized)	Cool, 4°C	6 hours	200 ml
	Other Ground-Water Characteristics of Interest			
Cyanide	P, G	Cool, 4°C, NaOH to pH >12, 0.6 g ascorbic acid[f]	14 days[g]	500 ml
Oil and Grease	G only	Cool, 4°C H_2SO_4 to pH <2	28 days	100 ml
Semivolatile, nonvolatile organics	T, G	Cool, 4°C	14 days	60 ml
Volatiles	G, T-lined	Cool, 4°C	14 days	60 ml

[a]References: Test Methods for Evaluating Solid Waste - Physical/Chemical Methods, SW-846 (2nd edition, 1982).
Methods for Chemical Analysis of Water and Wastes, EPA-600/4-79-020.
Standard Methods for the Examination of Water and Wastewater, 16th edition (1985).

[b]Container Types:
P = Plastic (polyethylene)
G = Glass
T = Fluorocarbon resins (PTFE, Teflon®, FEP, PFA, etc.)
PP = Polypropylene

(Continued)

Source: U.S. EPA Ground Water Monitoring Technical Enforcement Guidance Document, September 1986

TABLE 4-1 (Continued)

SAMPLING AND PRESERVATION PROCEDURES FOR DETECTION MONITORING

[c]Based on the requirements for detection monitoring (§265.93), the owner/operator must collect a sufficient volume of ground water to allow for the analysis of four separate replicates.

[d]Shipping containers (cooling chest with ice or ice pack) should be certified as to the 4°C temperature at time of sample placement into these containers. Preservation of samples requires that the temperature of collected samples be adjusted to the 4°C immediately after collection. Shipping coolers must be at 4°C and maintained at 4°C upon placement of sample and during shipment. Maximum-minimum thermometers are to be placed into the shipping chest to record temperature history. Chain-of-custody forms will have Shipping/Receiving and In-transit (max/min) temperature boxes for recording data and verification.

[e]Do not allow any head space in the container.

[f]Use ascorbic acid only in the presence of oxidizing agents.

[g]Maximum holding time is 24 hours when sulfide is present. Optionally, all samples may be tested with lead acetate paper before the pH adjustment in order to determine if sulfide is present. If sulfide is present, it can be removed by addition of cadmium nitrate powder until a negative spot test is obtained. The sample is filtered and then NaOH is added to pH 12.

Source: U.S. EPA Ground Water Monitoring Technical Enforcement Guidance Document, September 1986

APPENDIX D

SAMPLE TESTING PARAMETERS,

METHODOLOGIES & DETECTION LIMITS

psi

APPENDIX D
SAMPLE TESTING PARAMETERS, METHODOLOGIES & DETECTION LIMITS

ANALYTE	LABORATORY METHOD W/S	DETECTION LIMITS W/S
Total Petroleum Hydrocarbons	EPA 418.1/SW 9073	1 ppm/10 ppm
Benzene, Toluene, Ethylbenzene, Xylenes	EPA 8020	0.001 ppm/0.33 ppm
Total Organic Halogens	SW 9020	1 ppm/1 ppm
Total Organic Carbon	EPA 415.1	1 ppm/1 ppm
Acetone	EPA 8240	0.010 ppm/0.33 ppm
Methylene Chloride	EPA 8240	0.010 ppm/0.33 ppm
1,1,1 Trichloroethane	EPA 8240	0.010 ppm/0.33 ppm
Chlorobenzene	EPA 8240	0.010 ppm/0.33 ppm
Vinyl Chloride	EPA 8240	0.010 ppm/0.33 ppm
1,1 Dichloroethene	EPA 8240	0.010 ppm/0.33 ppm
1,1 Dichloroethane	EPA 8240	0.010 ppm/0.33 ppm
Methyl Ethyl Ketone	EPA 8240	0.010 ppm/0.33 ppm
Ethylene Glycol	EPA 624/EPA 8240	1 ppm/10 ppm
pH	EPA 1501/SW 9045	N/A
Total Dissolved Solids	EPA 160.1	5 ppm/NA
Chlorides	EPA 325.2	1 ppm/3 ppm
Sulfates	EPA 375.4	5 ppm/15 ppm
Arsenic (Ar)	EPA 206.3/SW 7061	0.005 ppm/0.20 ppm
Barium (Ba)	EPA 208.1/SW 7080	0.200 ppm/4 ppm
Cadmium (Cd)	EPA 213.1/SW 7130	0.010 ppm/0.50 ppm
Chromium (Cr)	EPA 218.1/SW 7190	0.050 ppm/1 ppm
Mercury (Hg)	EPA 245.1/SW 7471	0.001 ppm/0.05 ppm
Lead (Pb)	EPA 239.1/SW 7420	0.050 ppm/1 ppm
Selenium (Se)	EPA 270.3/SW 7740	0.005 ppm/0.20 ppm
Silver (Ag)	EPA 272.1/SW 7760	0.010 ppm/0.50 ppm
Total Cyanide	SW 9010	10 ppm/10 ppm
Copper (Cu)	EPA 220.1/SW 7210	0.020 ppm/1 ppm
Zinc (Zn)	EPA 289.1/SW 7950	0.010 ppm/0.50 ppm
Nickel (Ni)	EPA 249.1/SW 7520	0.050 ppm/1 ppm
Iron (Fe)	EPA 236.1/SW 7380	0.050 ppm/1 ppm

APPENDIX E

WELL DIAGRAMS

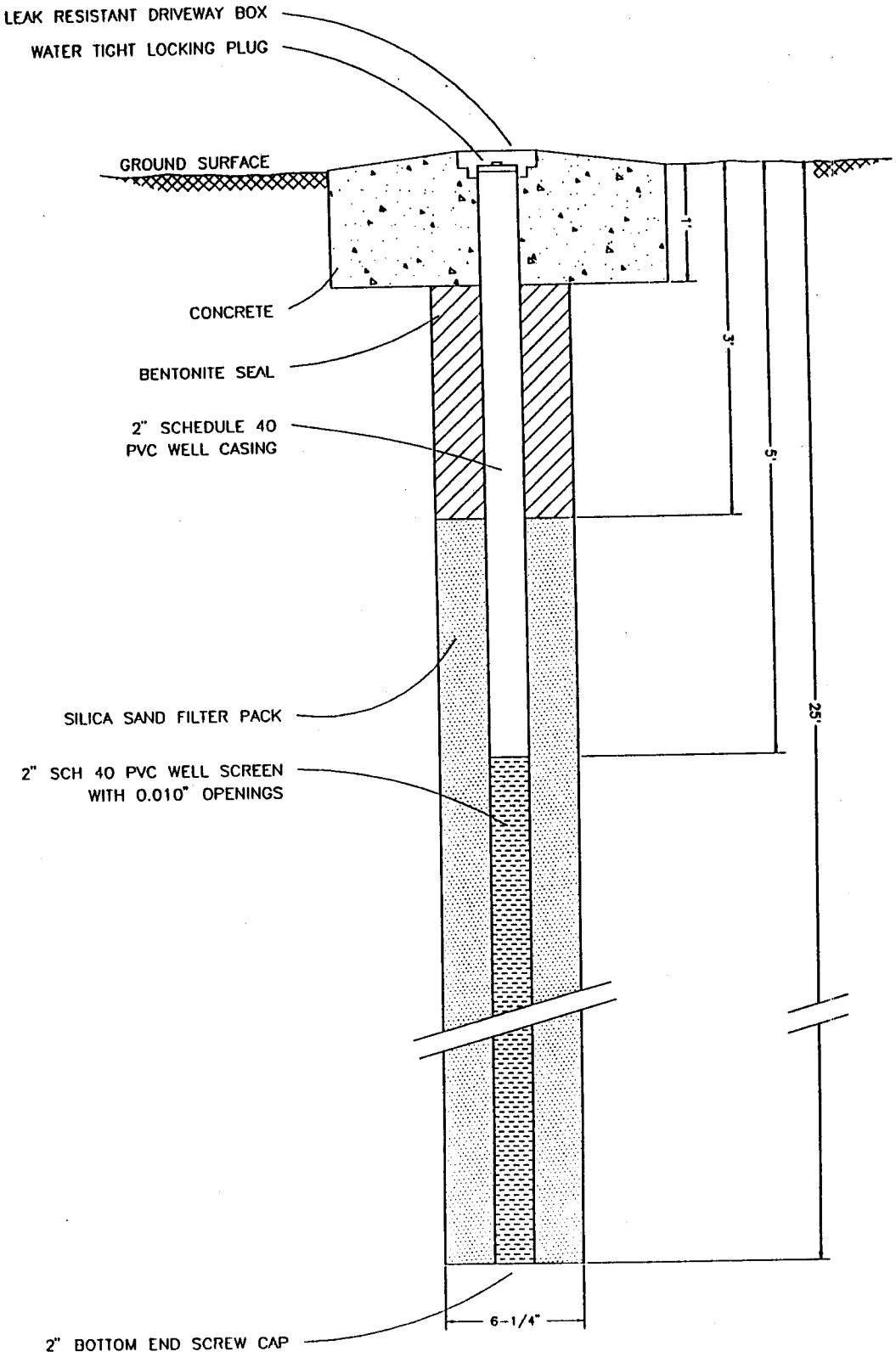

Professional Service Industries, Inc.
Three Burwood Lane
San Antonio, TX 78216

Typical Monitor Well Construction
Driveway Box Type

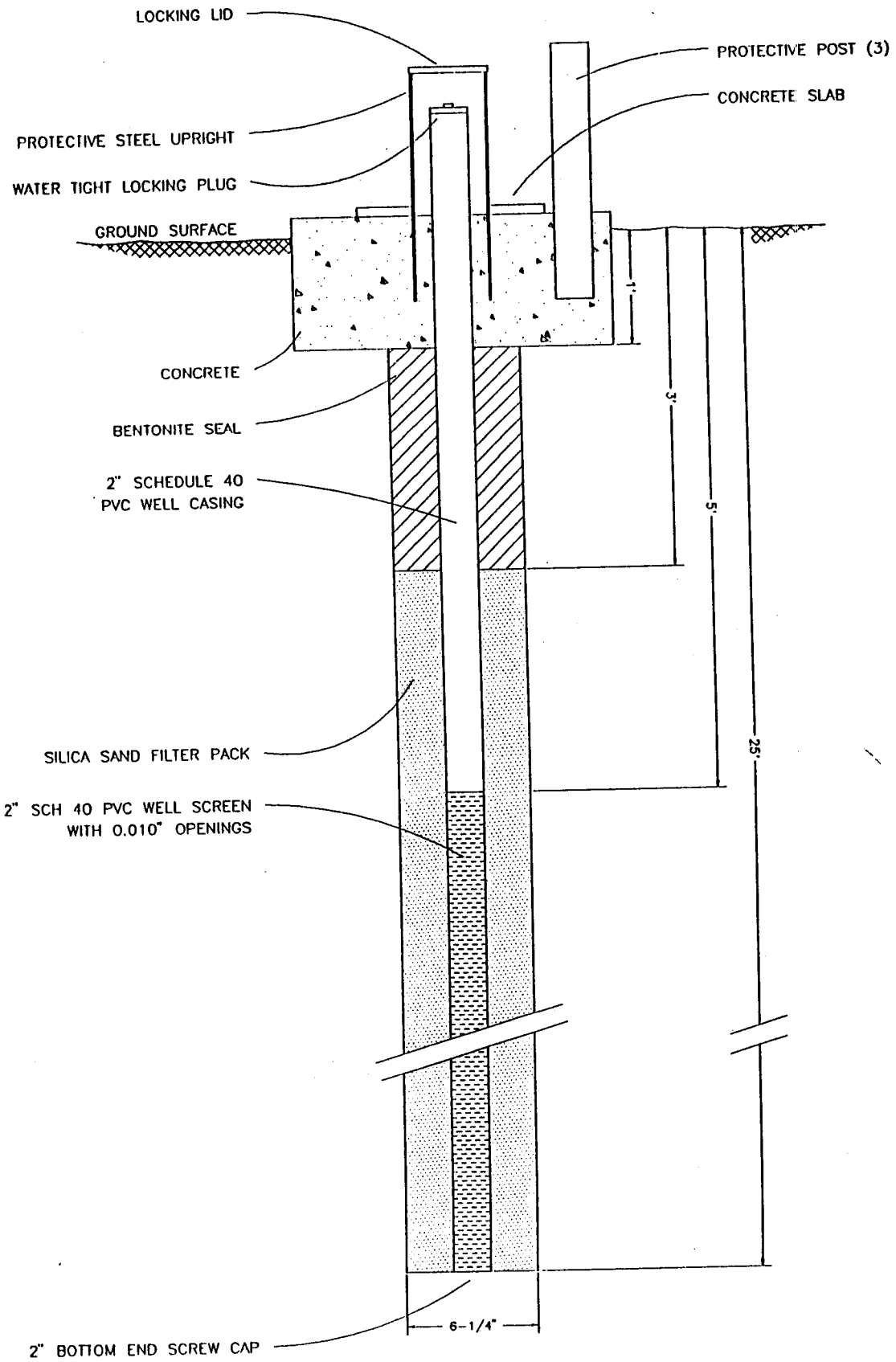

Professional Service Industries, Inc.
Three Burwood Lane
San Antonio, TX 78216

Typical Monitor Well Construction
Protective Upright Type

APPENDIX F

SAFETY TRAINING OUTLINE

SAFETY TRAINING OUTLINE

General Site Safety Training

1. General Requirements
   a. Mandatory Safety Equipment
      1. Safety Glasses
      2. Hard Hat
      3. Safety Shoes
      4. Short Sleeve Shirt
      5. Pants
   b. Additional NASCORPC Specified Safety Equipment Requirements
   c. Report all injuries and chemical exposures no matter how small to Supervisor and NASCORPC contact immediately.
   d. Keep work area neat.
   e. No smoking, eating or drinking except in designated areas.
   f. Check with NASCORPC contact at beginning of each shift.
   g. Follow all NASCORPC mandated procedures.
   h. Obey speed limits.
2. Chemicals and Their Hazards
   a. Basic Information for Each Chemical at Site
      1. Physical state, color and odor
      2. Health effects; effect on eyes, skin, lungs, bronchi and mucous membranes at short intervals (immediately) and long term. Is there a fatal exposure level?
      3. Fire hazard level: None, Low, Medium, High
      4. Dangerous reactions with other chemicals used at jobsite
      5. First aid instructions
      6. Spill response instructions and evacuation instructions
      7. Special concerns
   b. Sample to Follow: Sodium Hydroxide (Caustic)
      1. White corrosive liquid

2. All forms of chemical will cause burns, and in many cases, cause ulcerations and scars when exposed to any part of the body. Inhalation, even in dilute concentrations will burn. Prolonged exposure will cause severe damage to mouth, nose, lungs and upper respiratory tract. Contact with the eyes will damage tissue.
3. Low fire hazard
4. Dangerous when in contact with water or steam. Reaction produces heat and attacks living tissue.
5. Remove contaminated clothing at once. Deluge affected area or whole body with warm water shower for at least 15 minutes. Do not induce vomiting if ingested.
6. Seek medical attention immediately

d. Review MSDS for Other Chemicals in Work Area
   1. Products
   2. Raw Materials
   3. Specialty Chemicals

3. Evacuation Procedures
   a. Identify method of announcing warnings
   b. Turn off all spark-producing equipment
   c. Follow employees out of unit
   d. Head upwind of fire, release or spill
   e. Report to location specified by NASCORPC contact
   f. Take head count and report number to supervisor or NASCORPC contact
   g. Wait for all clear report from site safety and health supervisor and NASCORPC contact

<u>Personnel Protective Equipment</u>

1. General
   a. Provided for employee to reduce hazards
   b. Maintained by employee in useable condition
   c. Required even for visitors to job site

2. Basic Equipment

a. Hard Hats (29 CFR 1910.135)

1. Protection from falling objects and leaks from overhead pipelines and equipment.
2. Worn when on job site
3. Check straps for cracks and worn spots in webbing and plastic shell for cracks, holes, bumps, and depressions once a week.
4. Replace when damage is found.
5. Fits snugly but not binding on head.

b. Safety Glasses (29 CFR 1910.133)

1. Protects eyes from direct contact with chemical sprays, flying objects, glare, dust particles, or a combination of these hazards.
2. Worn when inside laboratory and on jobsite.
3. Check weekly for scratches and cracks to lenses and cracks or deformations to frame. Clean lenses a minimum of twice a day to remove dirt, dust, and chemicals.
4. Replace lenses when scratches interfere with your vision or cracks appear. Replace frames when broken or bent out of shape.
5. Fits snugly but not binding, so that when head is bent down glasses do not slip off nose and ears.
6. If you wear prescription glasses, check with supervisor for name of approved vendor. Will reimburse part of cost for glasses.
7. For outside work, tinted lenses are available.

c. Safety Shoes (29 CFR 1910.135)

1. Steel toe leather or chemical resistant to reduce injury to toes.
2. Worn on job site
3. Check before each shift for holes in soles and uppers, cracks in uppers, or damaged heels.
4. Replace when worn. See supervisor for reimbursement procedures.

5. If completely submerged in water, air dry away from heat before reuse. If completely submerged in toluene or other organic liquids, corrosive solutions such as copper chloride solution, or mixtures of these two liquids, throw away shoes and get new pair.

d. Uniforms and Chemical Resistant Suits (29 CFR 1910.120)

1. Reduces skin contact with chemicals.
2. Worn when required by client or potential exposure to organics and corrosives.
3. Change into clean uniform before each shift. Change into street clothes after each shift. Do not take home dirty uniform for any reason.
4. Replace when worn, ripped, torn or otherwise unfit to wear.
5. 100% cotton for welders. Tyvek or equivalent for drillers and samplers. Nomex when required.
6. If chemicals spill on uniform and soak skin, immediately change uniform after showering to remove chemicals. Wash uniform before wearing again.

3. Special Equipment

a. Goggles (29 CFR 1910.133)

1. Worn when using fume hood, grinding, collecting dusty or corrosive samples, welding, or required by client.
2. Ventless clear polycarbonate for inside duties. Can be tinted for outside duties.
3. Check before each use for scratches and cracks to lenses and frame. Clean lenses before each use to remove dirt, dust, and chemicals.
4. Replace lenses when scratches interfere with your vision, or cracks appear. Replace unit when broken or bent out of shape.
5. Fits snugly but not binding and without interfering with fit of safety glasses.

b. Face Shields (29 CFR 1910.133)

1. Used when welding, collecting molten and corrosive samples, and when goggles do not fully protect face.

2. Chemical resistant for samplers and drillers. Heat, impact, and radiation resistant for welders.
3. Check before each use for cracks, scratches and other damage that would reduce protection.
4. Replace damaged shields.
5. Attaches to hard hat brim. Does not interfere with wearing of safety glasses and goggles.

c. Gloves (29 CFR 1910.120)
1. Protects hands and arms from chemicals, cuts, burns, abrasions and rashes.
2. Cloth for general duties. Steel mesh for metal cutting and grinding. Long-armed chemical resistant for handling corrosives and copper chloride area. Heat resistant for steam cleaning and pulling samples from product above 100°F.
3. Check before each use for signs of wear.
4. Replace old worn gloves with new pair.
5. Fits snugly over clean chemical-free hand, forearm and sleeve of uniform. In hot weather, sprinkling cornstarch on hands and arms will reduce sweat buildup in glove.

d. Boots (29 CFR 1910.135)
1. Protects feet and lower legs against contact with corrosives and organics.
2. Worn when safety shoes cannot prevent contact with chemicals, such as pulling samples in muddy area or in contained areas filled with rainwater.
3. Check before each use for cracks, holes, rips and leaks.
4. Replace worn and damaged boots.
5. Fits comfortably with or without shoes. Must wear cotton socks. Use of cornstarch and barrier creams reduce sweating and cracking of skins.

e. Dust Respirators (29 CFR 1910.134)
1. Protects mouth, nose and throat from contact with dust and powdery chemicals.
2. Worn grinding if chemical fumes not a problem.

3. Replace when breathing is difficult or seal is broken.
4. Fits snugly without binding skin around mouth and nose. Elastic bands fit around head or ears.

e. Half-face Cartridge Respirators

1. Protects mouth, nose, throat and lungs from contact with acid gases, organics, and dust particles.
2. Worn when protection in adequately ventilated areas containing at least 19.5% Oxygen is needed from gases, vapors and/or particulates. Do not exceed limits written on side of cartridge. If unsure, ask supervisor about limits.
3. Check headbands, facepiece, inhalation and exhalation valves, cartridge holders, and cartridges/filters for dirt, cracks, breaks, tears, dents, distortion, buildup of materials, holes and other signs of damage that will interfere with wearing. All rubber parts should be flexible, not stiff.
4. Replace headbands, inhalation and exhalation valves, and cartridges if damaged before using. Replace respirator if any other part fails inspection.
5. Position cradle headband around the crown of the head and the bottom headband below the ears and around the nape of the neck. Adjust straps to prevent air from leaking around the facepiece, but not tight enough to dig into face.
6. Check for tightness after putting on respirator by lightly placing palm on exhalation valve cover. Gently exhale. A slight pressure buildup or bulge will occur if there are no air leaks. Lightly place palms over cartridge holders. Slowly inhale and hold breath for ten seconds. Facepiece will collapse against face if there are no air leaks. If respirator fit fails either test, readjust straps and mask until both tests are passed.

7. Cartridges are replaced when odor or taste of gases or vapors are detected by throat, nose or eyes, or when breathing becomes difficult. Depending on levels of contaminants, cartridges are replaced after 8-12 hours of wear.

8. Wash respirator facepiece after each use. Place in clean protective bag and seal closed. Label bag with note that respirator is clean. Keep sealed bag in clean, dry location that will not distort facepiece.

g. Full-face Cartridge Respirators

1. Protects eyes, face, mouth, nose, throat and lungs from contact with acid gases, organics and dust particles.

2. Worn when protection in adequately ventilated areas containing at least 19.5% Oxygen is needed from gases, vapors and/or particulates. Do not exceed limits written on side of cartridge. If unsure, ask supervisor about limits.

3. Check headbands, facepiece, plastic window, inhalation and exhalation valves, cartridge holders, and cartridges/filters for dirt, cracks, breaks, tears, dents, distortion, buildup of materials, holes and other signs of damage that will interfere with wearing. All rubber parts should be flexible, not stiff.

4. Replace headbands, inhalation and exhalation valves, and cartridges if damaged before using. Replace plastic window if scratches interfere with vision. Replace facepiece if any other part fails inspection.

5. Position cradle headband around the crown of the head and the bottom headband below the ears and around the nape of the neck. Adjust straps to prevent air from leaking around the facepiece, but not tight enough to dig into face.

6. Check for tightness after putting on respirator by lightly placing palm on exhalation valve cover. Gently exhale. A slight pressure buildup or bulge will occur if there are no air leaks. Then lightly place palms

over cartridge holders. Slowly inhale and hold breath for ten seconds. Facepiece will collapse against face if there are no air leaks. If respirator fit fails either test, readjust straps and mask until both tests are passed.

7. Cartridges are replaced when odor or taste of gases or vapors are detected by throat, nose or eyes, or when breathing becomes difficult. Depending on levels of contaminants, cartridges are replaced after 8-12 hours of wear.

8. Wash respirator facepiece after each use. Place in clean protective bag and seal closed. Label bag with note that respirator is clean. Keep sealed bag in clean, dry location that will not distort facepiece.

h. Job-specific

1. Air Packs (repeat full face respirator)
2. Fall Protection
3. Welding Shields
4. Drilling

4. Discussion

5. Regulations Covered in 29 CFR 1910.133

29 CFR 1910.134

29 CFR 1910.135

29 CFR 1910.120 (q)

40 CFR 264.16(a)(1)

Jobsite Hazard Communication

1. Introduction
    a. Knowledge of Chemicals Used at Jobsite
    b. Knowledge of Hazards of Chemicals at Jobsite
    c. Protective Equipment for Safe Handling
    d. First Aid for Chemicals On-site
    e. Sources of Information
2. Chemical Inventory
    a. Plantwide
    b. Work Area
    c. Job-related
3. Safety Information
    a. Types of Hazards
    b. Protection Against Hazards
    c. First Aid
    d. Main Source is MSDS
    e. Reference Book Location From NASCORPC
    f. Vendor or CHEMTRAC (800) 424-9300
4. Records
    a. Contractor Master: Contractor's Safety Office
    b. NASCORPC Master File
    c. NASCORPC Jobsite Locations
    d. Other Locations
5. Chemicals of Concern
    a. Job-specific From Contractor
    b. NASCORPC List at Jobsite
    c. Examples
6. Discussion
7. Regulations
    a. 29 CFR 1910.1200
    b. 29 CFR 1910.120(p)
    c. 40 CFR 116
    d. 40 CFR 263
    e. 29 CFR 1910.119(d)

APPENDIX G

SAMPLE SITE SAFETY & HEALTH PLAN

psi

PROFESSIONAL SERVICE INDUSTRIES, INC.

SITE SAFETY AND HEALTH PLAN

1.0 Introduction - This Safety and Health Plan (SHP) is prepared to provide information for worker safety and emergency procedures on the specific site named and described below. The SHP as prepared is not intended as a stand-alone document, nut will augment the Professional Service Industries Employer's Safety and Health Plan (ESHP), and serve as Appendix D of that document. A copy of the ESHP and prepared SHP must be made available to all personnel working under the conditions of the SHP, and must be reviewed with all personnel. Following review, all personnel will sign the acknowledgement page indicating that they have read and understand the requirements of the SHP.

2.0 ORGANIZATION

SHP Prepared By: Laura J. Gimpelson Date: _____

Approved by: Ron Pitts Date: _____

Site Safety and Health Supervisor: John Cook

Address: Three Burwood Drive, San Antonio, TX Tel: 210-342-3477

PSI Site Supervisor: John Langan

3.0 SITE DESCRIPTION

Site Name: Naval Air Station, Corpus Christi, Texas

Location: 11,001 D Street, Corpus Christi, Texas

Site Contact: Jim Boatman Tel:

Address:

Site Characteristics (Use, terrain, buildings, etc.): Facility is a Naval air training station and a Naval, Army, and Coast Guard maintenance and logistical facility with base housing and medical facilities.

4.0 TASK ANALYSIS:

Proposed Date(s) of PSI Work: _____

General Description of Work to be Accomplished: Drilling of soil borings and groundwater monitoring wells. Collection of soil land groundwater samples.

Task to be Performed: Drill soil borings.

Hazard Risk: _ Unknown ____ High ____ Moderate X Low

Level of Protection: ____ A ____ B ____ C X D

Task to be Performed: Drill and Develop Groundwater Monitoring Wells

Hazard Risk: _ Unknown ____ High ____ Moderate X Low

Level of Protection: ____ A ____ B ____ C X D

Task to be Performed: Collection of Soil Samples

Hazard Risk: _ Unknown ____ High ____ Moderate X Low

Level of Protection: ____ A ____ B ____ C X D

Task to be Performed: Collection of Groundwater Samples

Hazard Risk: _ Unknown ____ High ____ Moderate X Low

Level of Protection: ____ A ____ B ____ C X D

Task to be Performed: Observation of Above Activities

Hazard Risk: _ Unknown ____ High ____ Moderate X Low

Level of Protection: ____ A ____ B ____ C X D

5.0 HAZARD ANALYSIS:

Hazards Present:

____	Biological	____	Ionizing Radiation
X	Physical Safety	X	Cold/Heat Stress
____	Oxygen Deficiency	____	Electrical
____	Fire/Explosion	X	Chemical

Contaminant Locations:

____	Air	X	Water	____	Sediment	
X	Soil	X	Surface	X	Underground	

____ Other (Specify): _____

Hazard Discussion: Possible dermal or inhalation exposure to trace levels of hydrocarbons or metals in soils. Should be below OSHA PELs but may be above odor threshold for hydrocarbons.

6.0 PERSONAL PROTECTIVE EQUIPMENT:

Level: D Task(s) Drilling of soil borings

X Hard Hat

X Ear Protection

X Respirator: Half-Mask X Full-Mask

Cartridge Type: Organics/Dust

X Face Protection: Shield Glasses: X

Inner Gloves: Material

X Outer Gloves: Material Cotton or Leather

Coveralls: Hooded: Yes No

Material:

X Steel-Toed Boots: Material Leather

Disposable Booties: Material

Other (Specify):

Level: Task(s)

Hard Hat

Ear Protection

Respirator: Half-Mask Full-Mask

Cartridge Type:

Face Protection: Shield Glasses:

Inner Gloves: Material

Outer Gloves: Material

Coveralls: Hooded: Yes No

Material:

Steel-Toed Boots: Material

Disposable Booties: Material

Other (Specify):

7.0 MONITORING INSTRUMENTS:

Equipment Required:

_____ Combustible Gas/Oxygen Meter

_____ Hydrogen Sulfide Meter

_X_ Photoionization Detector (HUN/TIP)

_X_ Organic Vapor Analyzer

_____ Colorimetric Detector Tubes

_____ Radiation Survey Meter

_____ Dosimeter Badges

_____ Other (Specify): _____

Monitoring Frequency and Levels:

Hazard: _____

Frequency: _____

Response: _____

Hazard: _____

Frequency: _____

Response: _____

Hazard: _____

Frequency: _____

Response: _____

Hazard: _____

Frequency: _____

Response: _____

8.0 DECONTAMINATION:

Level: _____ Task(s): Drilling of Soil Borings

Decontaminating Fluid(s): Deionized Water or Steam

Station # 1 Procedure: Brush Off Loose Dirt.

Station # 2 Procedure: Wet Equipment Using Pressurized Water or Steam Cleaner.

Station # _____ Procedure: _____

Station # _____ Procedure: _____

Level: _____ Task(s): Collection of Sample Equipment

Decontaminating Fluid(s): Soap Solution, Deionized Water, 0.01N Nitric Acid

Station # 1 Procedure: Shake off Loose Soil.

Station # 2 Procedure: Hand Wash Equipment with Brush in soap solution. Rinse with pressurized deionized water Rinse with 0.1 N Nitric Acid. Repeat Water Rinse.

Level: _____ Task(s): _____

Decontaminating Fluid(s): _____

Station # _____ Procedure: _____

Station # _____ Procedure: _____

Station # _____ Procedure: _____

Station # _____ Procedure: _____

Station # _____ Procedure: _____

9.0 EMERGENCY PROCEDURES

Emergency Signals:

Evacuate Site: With forefinger extended, move hand in a circular motion above the head. _____

Leave Area Immediately: Gripping wrists or waist of another worker with both hands.

I Can't Breathe: Hand gripping throat.

Need Assistance: Hands on top of head.

I'm Okay - I Understand: Thumbs up.

No - Negative: Thumbs down.

Other: _____

_____

Emergency Telephone Numbers

Local Police Department ( ) -

Local Fire Department ( ) -

Local Rescue Department ( ) -

Primary Hospital Name: _____

Telephone: ( ) -

Secondary Hospital Name: _____

Telephone: ( ) -

Environmental Medicine Resources

- 24 Hour Telephone (713) 455 - 0818
- Satellite Paging (800) 869 - 2337 ID ext. 5125

National Poison Control Center (800) 492 - 2414
Chemical Mfg. Association - Chemical Referral Center (800) 262 - 8200

DIRECTIONS TO EMERGENCY MEDICAL FACILITIES

Primary Hospital: _____

Address: _____

Telephone Number: _____

Description of route to Primary Hospital (Show Map on Following Page):

_____

_____

_____

_____

_____

_____

Secondary Hospital: _____

Address: _____

Telephone Number: _____

Description of route to Secondary Hospital (Show Map on Following Page):

_____

_____

_____

_____

_____

_____

10.0 ACKNOWLEDGEMENT OF TRAINING

This will acknowledge that the information contained in the foregoing Site Safety and Health Plan and the PSI Employer's Safety and Health Plan has been presented and explained to me; and that I understand the information and agree to comply with the requirements and provisions contained in these documents.

Name: _____ Date: _____

Name: _____ Date: _____

Name: _____ Date: _____

Name: _____ Date: _____

Name: _____ Date: _____

Name: _____ Date: _____

Name: _____ Date: _____

Name: _____ Date: _____

Name: _____ Date: _____

Name: _____ Date: _____

Name: _____ Date: _____

Name: _____ Date: _____

Name: _____ Date: _____

Name: _____ Date: _____

Name(s) of Presentor(s):

_____ (Name) _____ (Name)

_____ (Signature) _____ (Signature)

APPENDIX H

RADIOACTIVE WASTE STORAGE BINS CLOSURE DOCUMENTATION

DEPARTMENT OF THE NAVY
OFFICE OF THE CHIEF OF NAVAL OPERATIONS
WASHINGTON, DC 20350-2000

IN REPLY REFER TO
6470
Ser N455C/3U594053
18 May 93

From: Chairman, Navy Radiation Safety Committee
To: Commanding Officer, Naval Hospital, 10651 E Street, Corpus Christi, TX 78419-5131

Subj: TERMINATION OF NAVY RADIOACTIVE MATERIAL PERMIT NO. 42-00285-11NP

Ref: (a) NAVHOSP Corpus Christi TX ltr 6470 Ser 064/00451 of 23 Mar 93

1. As requested by reference (a), Navy Radioactive Material Permit (NRMP) No. 42-00285-11NP is hereby terminated.

2. Reports of radiation and contamination surveys and transfer of your radioactive material, submitted by reference (a), have been reviewed. The spaces covered under the permit may be released for unrestricted use.

3. Records pertaining to this permit must be kept on file until authorized for disposal by the Navy Radiation Safety Committee.

4. If the use of radioactive material is desired in the future, a new application for a NRMP is required.

J. W. MALINOSKI
By direction

Copy to:
BUMED (MED-211)
NRC Region II Atlanta GA
NAVENVIRHLTHCEN Norfolk VA

DEPARTMENT OF THE NAV
NAVAL HOSPITAL
CORPUS CHRISTI, TEXAS 78419-5200

6470
Ser 064/0 0 4 5 1
MAR 2 3 1993

From: Commanding Officer, Naval Hospital Corpus Christi
To: Commanding Officer, Navy Environmental Health Center, Code 31

Subj: TERMINATION OF THE NAVY RADIOACTIVE MATERIALS PERMIT NRMP 42-00285-11NF

Encl: (1) NRC form 314
(2) Swipe survey data sheet
(3) Table of acceptable surface contamination levels
(4) Description of swipe area
(5) Map of Nuclear Medicine Department

1. It is requested that the Navy radioactive materials permit, NRMP 42-00285-11NF, be terminated due to the closure of the Nuclear Medicine Department.

2. Radionuclides sources held by this command were leak tested by swipe source methods and then transferred to Brooke Army Medical Center (BAMC) via Federal Express. Swipe source tests were also completed on Nuclear Medicine's Departmental spaces, followed by an area survey with a IM-203/PDR-27, serial number 985. The results of the area survey were less than background with background at 0.01mR. All surveys were found to be below minimum standards per enclosure (3). Additionally, useable equipment was transferred to BAMC. Equipment found to be unacceptable will be surveyed.

3. Enclosure (1) states the disposition of the radionuclides held by this command. Enclosures (2) through (5) provides the residual contamination data of the nuclear medicine spaces. No decontamination was required per enclosure (3) and all excess equipment will be surveyed and/or redistributed.

4. The nuclear medicine spaces are intended to be converted to office spaces.

5. My point of contact in this matter is HM2 Jeffrey K. Caldwell at DSN 861-3466/3378 or Comm (512) 939-3466/3378.

B. T. SPARKS

MAIL
MAR 2 3 1993

13 Jan 93

MEMORANDUM

From: Commanding Officer
To: All Departments

Subj: NUCLEAR MEDICINE

Ref: (a) CO, NAVHOSP memo dated 28 Dec 92

1. Nuclear Medicine services are no longer available at this Command. The following guidelines replace those in reference (a) and are approved for implementation:

a. All non-emergent Nuclear Medicine studies will be coordinated through the Radiology Department and sent to Brooke Army Medical Center (BAMC). For clarification purposes, this includes active duty as well as dependents and retired personnel.

b. All emergent Nuclear Medicine studies for active duty personnel will be sent to a civilian service and paid by a Blanket Purchase Agreement (BPA). These patients will be sent to Radiology Department with a completed DD 1149. The Radiology partment will make the appointment for the patient.

c. All emergent Nuclear Medicine studies required on dependents and retired personnel will be sent to a civilian provider and paid for utilizing a BPA. These patients will be sent to the Radiology Department with a completed DD 1149. The Radiology Department will make the appointment for the patient. If the results of the Nuclear Medicine study indicate the required medical treatment exceeds the scope of care which can be provided at the Naval Hospital, the patient will be disengaged to a civilian provider. The patient should be sent to the Managed Care Office during normal working hours with a completed DD 2161 (Referral for Civilian Medical Care). This patient will be given a list of specialists to choose from and that physician will provide treatment for that episode of care. If medical care can be rendered at the Naval Hospital, the patient will be returned for treatment.

2. If additional information is desired, call the Managed Care Office at ext. 3238.

B. T. SPARKS

Copy to:
Directors
Radiology
aged Care
gency Room
Comptroller

28 Dec 92

MEMORANDUM

From: Commanding Officer
To: All Departments

Subj: NUCLEAR MEDICINE

1. Nuclear Medicine services are no longer available at this Command. The following guidelines are approved for implementation:

a. All Nuclear Medicine studies will be scheduled through the Radiology Departments and performed at a civilian hospital.

b. Active duty personnel and individuals receiving Nuclear Medicine treatment at the time of the discontinuation of this service will be covered under a Blanket Purchase Agreement (BPA). All Nuclear Medicine studies requested after the closing of Nuclear Medicine services for dependents and retired personnel will be submitted by the requesting physician on a DD 2161 (Referral for Civilian Medical Care), for disengagement to a civilian specialist. Please forward all DD 2161 to Managed Care for disposition.

B. T. SPARKS

Copy to:
Directors
Radiology
Managed Care
Emergency Room

28 Dec 92

MEMORANDUM

From: Director for Ancillary Services
To: Commanding Officer
Via: Executive Officer

Subj: COMMENTS PERTAINING TO NUCLEAR MEDICINE

1. The policy forwarded for your perusal was previously approved by you. However, I smoothed the memorandum for clarity.

R. H. MANN

16 Dec 92

FIRST ENDORSEMENT on Radiology memo dtd 10 Dec 92

From: Director Ancillary Services Concur
To: Commanding Officer
Via: (1) Director Medical Services
(2) Executive Officer

Subj: NUCLEAR MEDICINE

1. Forwarded with comments.

2. Item b should read: All Nuclear Medicine studies will be scheduled through the Radiology Department and performed at a civilian hospital.

3. Item c should include: active duty personnel will be covered under a Blanket Purchase Agreement (BPA).

R. M. HANN

Copy to:
Head, Radiology Department

22 DEC 92 09 48

10 DEC 92

MEMORANDUM

From: Head, Radiology Department
To: Commanding Officer
Via: (1) Director Ancillary Services
(2) Director Medical Services
(3) Executive Officer

Subj: NUCLEAR MEDICINE

1. It is recommended that the following guidelines be approved for implementation:

a. Effective immediately, Nuclear Medicine Services will no longer be available in - house.

b. All Nuclear Medicine studies for active duty personnel will be scheduled through Radiology Department and performed at a civilian hospital.

c. All Nuclear Medicine Studies for Dependents and Retired personnel will to be submitted by the requesting physician on a DD 2161 (Referral For Civilian Medical Care), for disengagement to a civilian specialist. Please forward all DD 2161 to Manage Care for disposition.

2. Please direct any questions to Radiology @ 3378.

R. G. Connolly
LT/MC/USNR

Copy to:
Managed Care

APPENDIX I

SWMU 305

DEPARTMENT OF THE NAVY
NAVAL AIR STATION
CORPUS CHRISTI, TEXAS 78419-5000

IN REPLY REFER TO

6280
Code 189

29 MAR 1993

Texas Water Commission
District 12 Field Office
4410 Dillon Lane, Suite 47
Corpus Christi, TX 78415-5326

Gentlemen:

In response to your letter of February 9, 1993, regarding the removal of the Underground Storage Tank (UST) near Building 305, the following information is provided:

a. The age, volume, material of construction, and material stored in Tank 305: Records of the age, volume and material of construction have not been located. A retired employee remembers the tank was installed in approximately 1950. Visual inspection of the tank upon removal indicated it was approximately 500 gallons in size and fabricated of steel with an asphaltic or bitumen coating. It served as a waste collection tank for motor oil, varsol, transmission fluid, brake fluid, hydraulic fluid, antifreeze and PD-680 (Stoddard type solvent). Naptha based solvents may have also been dumped into the tank prior to 1980. To the best of our knowledge, chlorinated solvents were not managed in the tank. Use of the tank was discontinued in 1982.

b. The sequence of events leading to the discovery and subsequent removal of the UST: In January 1992, Mr. Dilip Shaw, our UST Program Manager, was informed by Public Works transportation personnel that there was a possibility that a tank was still buried next to Building 305. Our UST registration records did not include the tank. Mr. David Harvey of the Texas Water Commission (TWC) was apprised of the situation and with his concurrence, the tank was subsequently removed by Tank Systems, Inc., on April 23, 1992.

c. The condition of the UST and associated piping upon excavation: Station employees who were present when the tank was excavated and removed noted that the tank was in good condition with no rust present. The condition and quantity of associated piping that was removed could not be ascertained. However, Tank Systems, Inc., has photos that may show the condition. We have requested the photos and will make them available to TWC staff when they are received.

d. The handling, transportation, and disposal of any contaminated soil and/or fluid removed from the UST, including names and addresses of all contractors, transporters, and disposal facilities involved: All soils removed from the excavation pit were returned to it immediately after removing the tank. The tank contained 173 gallons of fluid that was pumped out and disposed of by MO-VAC Environmental. The disposition of the fluid and information on MO-VAC and Tank Systems, Inc., is provided in enclosure (1).

e. Any laboratory analyses or hazardous waste determinations on the fluid removed from the tank or any contaminated soil:

(1) At the time the tank was removed, our UST Tank Manager was unaware that it had been used to store waste fluids; therefore, no laboratory analyses were performed. MO-VAC did not analyze the waste fluid but did confirm that it was waste oil. Analytical results of soil samplings performed at the time the tank was removed are in enclosure (2). Because the soil showed a high TPH value and no BTEX, we were suspect of the analyses results. A resample of the pit was performed and it yielded similar differences between the TPH and BTEX concentrations. Results from the resampling are in enclosure (3). With the confirmed high TPH values, we made additional inquiries of shop personnel and learned the tank had been used for the collection of waste oils, etc.

(2) Tank 305's historical use, its proximity to a known fuel contamination site (Public Works Gas Station) and the high TPH values all pointed to the need for a sampling event that would better characterize the contaminated soil plume. After meeting with Mr. Harvey in June 1992 and apprising him of the circumstances regarding Tank 305, a soil sampling (boring) effort was agreed upon. The sampling grid and results are in enclosure (4). Because previous results showed no halogens were present, soil cuttings were put into the still open tank pit.

f. And the handling, transportation, and disposal of the UST and related piping. Once again, including names and addresses of personnel involved:

(1) Tank 305 was removed by Tank Systems, Inc., and transported and destroyed by Texas Tank Destroyal of Venus, Texas. A copy of the certificate of destruction is in enclosure (5). The disposition of any piping that was removed with the tank is unclear. However, because of the short distance between Building 305 and the tank, we strongly suspect it would have remained connected to the tank and, therefore, been destroyed with the tank. Not all of the piping was removed with the tank. A short piece (less than one foot) rises above the concrete pavement, passes through the pavement and extends into the soil a short distance (perhaps a foot).

(2) During our investigation of the facts, we also learned that in prior years, engine degreasing with varsol and steam cleaners was performed on the concrete pavement near the southwest corner of Building 305. We think oily compounds from the degreasing operation leaked through joints in the concrete and caused the elevated TPH values that were detected in the previously mentioned soil borings.

6280
Code 189

If you have any further questions, please contact Mr. Dilip Shaw at (512) 939-3776 or Mr. Terry Boone, Environmental Compliance Division Director at (512) 939-2170.

Sincerely,

J C Bittle

Encl:
(1) MO-VAC Environmental Report & Manifest
(2) Analysts Services Inc., Analyses 54564 to 54566
(3) Analysts Services Inc., Analyses 54658 to 54661
(4) Tank Systems, Inc., Location Sketch
(5) Texas Tank Destroyal Certificate of Date Destroyed

Copy to:
Texas Water Commission
Attn: Ms. Liz Scaggs
Petroleum Storage Tank Division
P.O. Box 13087, Capitol Station
Austin, TX 78711

MO-VAC ENVIRONMENTAL, INC.

P.O. BOX 4078
McALLEN, TX 78502
1-800-299-7745

03/05/93

United States Navy

Attn: Mr Dilip Shaw

Per your request I am sending you a copy of our Manifest #146 completed. As you can see the manifest shows waste oil only and signed by a Tank Systems Representative as that. The waste oil was then sent to our Alice Terminal and unloaded in our waste oil holding tank. Later that month our transport hauled the waste oil to our McAllen Terminal where our reclamation plant is stationed at. We do not analyze waste oil. This is used for fuel blending and sent out to asphalt plants and used as burner fuel. If we can be of any further service please feel free to call anytime.

Best Regards,

Arnold Perez Jr.
V.P. of Environmental
Operations

AP/mr

1233664

№ 140

NON-HAZARDOUS SPECIAL WASTE MANIFEST

GENERATOR

Generator Name: Tank System

Address: 2112 Bullard #17
Austin TX 78758

Phone No. 512 - 329995

Generating Location: Corpus Christi

Address: Duncan Station

Phone No. ___ - ___

Waste Code

Description of Waste: Used oil U ST.

Quantity - Gallons: 173

Waste Pulled From:
- [ ] Open Hole
- [x] Inside U.S.T.
- [ ] 55 Gal. Drums
- [ ] Other

I hereby certify that the above named material does not contain free liquid as defined by 40 CFR Part 260.10 of any applicable state law, is not a hazardous waste as defined by 40 CFR Part 261 or any applicable state law, has been properly described, classified and packaged, and is in proper condition for transportation according to applicable regulations.

Generator Authorized Agent Name: DAN MURPHY

Signature: Dan Murphy

Shipment Date: 04 23 92

TRANSPORTER

E.P.A. - I.D. - TXD 006801360

TDWR/TDH - Transporter #40370

Truck No. 321

Phone No. 1-800-299-7745

Transporter Name: MOVAC ENVIRONMENTAL

Driver Name (Print): Victor Ramirez C

Address: P.O. BOX 4078

Vehicle License No./State:

McAllen, TX 78502

Vehicle Certification: MC 3C

I hereby certify that the above named material was picked up at the generator site listed above.

Driver Signature: Victor R. Ramirez

Shipment Date: 04 23 92

I hereby certify that the above named material was delivered without incident to the destination listed below.

Driver Signature: Victor R. Ramirez

Delivery Date: 04 23 9

DESTINATION

Site Name: Movac

Phone No. ___ - ___

Address: 6620 N McColl Edinburg TX

I hereby certify that the above named material has been accepted and to the best of my knowledge the foregoing is true and accurate.

Authorized Agent

Signature: Alonso Lara

Receipt Date: 04 23 93

White - original Pink - TSD Facility Yellow - Transporter Green - Generator's first copy

ANALYSTS SERVICES, INC.

P. O. BOX 4352
HOUSTON, TX 77210

12715 ROYAL DRIVE
STAFFORD, TX 77477

DATE: 4-29-92

FAX # DIALED: 512/339-9959

TO: DAN MARTIN

COMPANY: TANK SYSTEMS INC.

FROM: NADER SORURBAKHSH

NO. OF PAGES: (Includes this sheet) 6

SUBJECT: TEST RESULTS

MESSAGE

CLIENT : Tank 305 CCNAS

SITE NAME:

PROJECT :

LAB NUMBERS: 54564 TO 54566

If you do not receive all of the pages listed, please contact us at:

FAX #: (713) 240-4481

PHONE: (713) 240-3042

TOLL FREE: (800) 248-7778

ANALYSTS SERVICES, INC.
P. O. BOX 4352
HOUSTON, TEXAS 77210
713/240-3042

COMPANY

Tank Systems, Inc.
Attn: Dan Martin
2112 Rutland Drive
Austin, Texas 78758

LAB INFORMATION

DATE: 29 APRIL, 1992

LAB NO: 54564

SAMPLE INFORMATION

CLIENT: TANK 305 CCNAS

SITE:

PROJECT:

SAMPLE I.D.: COMP BOTTOM 4/23 1130 7' ft deep

RESULTS

PARAMETER	METHOD NO.	DATE	TIME	ANALYSTS	RESULTS
BENZENE	624/8020	04-27-92	5:30pm	AP	<1.0 mg/Kg
TOLUENE	624/8020	04-27-92	5:30pm	AP	<1.0 mg/Kg
ETHYLBENZENE	624/8020	04-27-92	5:30pm	AP	<1.0 mg/Kg
XYLENE	624/8020	04-27-92	5:30pm	AP	<1.0 mg/Kg
TPH	418.1	04-27-92	5:30pm	AP	535.0 mg/Kg
TCLP BENZENE CONTENT	-	04-27-92	5:00pm	AP	<.25 mg/Kg
TOTAL LEAD	3020	04-28-92	2:00pm	RV	<1.0 mg/Kg
EP (TOX) LEAD	1310	04-28-92	2:00pm	RV	<1.0 mg/Kg
TOTAL ORGANIC HALOGENS, ppm	9020	04-28-92	4:00pm	RV	<1.0 mg/Kg

REPORTED BY: [signature]

ANALYSTS SERVICES, INC.

ANALYSYS SERVICES, INC.
P. O. BOX 4352
HOUSTON, TEXAS 77210
713/248-5042

COMPANY:

Tank Systems, Inc.
Attn: Dan Martin
2112 Rutland Drive
Austin, Texas 78758

LAB INFORMATION

DATE: 29 APRIL, 1992

LAB NO: 54566

SAMPLE INFORMATION

CLIENT: TANK 305 CONAS

SITE:

PROJECT:

SAMPLE I.D.: COMP STOCKPILE 4/23 1200

RESULTS

PARAMETER	METHOD NO	DATE	TIME	ANALYSTS	RESULTS
BENZENE	624/8020	04-27-92	5:30pm	AP	<1.0 mg/Kg
TOLUENE	624/8020	04-27-92	5:30pm	AP	<1.0 mg/Kg
ETHYLBENZENE	624/8020	04-27-92	5:30pm	AP	<1.0 mg/Kg
XYLENE	624/8020	04-27-92	5:30pm	AP	<1.0 mg/Kg
TPH	418.1	04-27-92	5:30pm	AP	1575.0 mg/Kg
TCLP BENZENE CONTENT		04-27-92	5:00pm	AP	<.25 mg/Kg
TOTAL LEAD	7020	04-28-92	2:00pm	RV	<1.0 mg/Kg
EP (TOX) LEAD	1310	04-28-92	2:00pm	RV	<1.0 mg/Kg
TOTAL ORGANIC HALOGENS, ppm	9022	04-28-92	4:00pm	RV	<1.0 mg/Kg

REPORTED BY: [signature]

ANALYSIS SERVICES, INC.

QA/QC DATA

S E I.D. COMP BOTTOM 4/23 1130 LAB NO. 54564 DATE 04-29-92

PARAMETER	RESULTS	DUPLICATE	SAMPLE + SPIKE	SPIKE	%RECOVERY
BENZENE	<1.0	<1.0	9.2	10	92
TOLUENE	<1.0	<1.0	9.5	10	95
ETHYLBENZENE	<1.0	<1.0	9.0	10	90
XYLENE	<1.0	<1.0	10.3	10	103
TPH	535.0	494.0	N/A	N/A	N/A
TOTAL LEAD	<1.0	<1.0	4.7	5	94
EPTOX LEAD	<1.0	<1.0	4.4	5	88
TOX	<1.0	<1.0	86.0	1	86
TCLP BENZENE	<.25	<.25	N/A	N/A	N/A

CHAIN OF CL

ANALYSTS SERVICES, INC

12715 ROYAL DRIVE
STAFFORD, TEXAS 77477

Date _____ Page _____ of _____

Lab Number _____

CLIENT: Tank Systems LLC
ADDRESS: 505 W Yager, Austin TX
PROJECT NAME: Tank #505 CCMAS
CONTRACT/PURCHASE ORDER/QUOTE #:

PROJECT MANAGER:
PHONE NUMBER:
FAX NUMBER:
SITE CONTACT:

ANALYSIS

Sample No. Identification	Date	Time	Lab Sample Number	SAMPLE TYPE LIQ.	AIR	SOLID	No. of Containers	TOTAL LEAD	EP TOX LEAD	TOTAL ORGANIC HALIDES	BTEX	TCLP BENZENE	TPH	Sample Condition REMARKS
Comp. Bottom	4/25	11:50	54564			✓	1	✓	✓	✓	✓	✓	✓	
Comp. Walls	/	/	54565			✓	1	✓	✓	✓	✓	✓	✓	
Comp. Stockpile	4/25	[illegible]	54566			✓	1	✓	✓	✓	✓	✓	✓	

SAMPLERS: (Signature) Dan Murphy

Received by: (Signature) _____ Date _____ Time _____

Relinquished by: (Signature) Dan Murphy

Received by: (Signature) _____ Date _____ Time _____

Relinquished by: (Signature) _____ Date _____ Time _____

Received for Laboratory by: _____ Date RECEIVED 4-24 Time _____

Method of Shipment:

Special Instructions:

SAMPLE DISPOSITION:
1. Storage time requested: _____ days
(Samples will be stored for 30 days without additional charges; thereafter storage charges will be billed at the published rates.)
2. Sampler to be returned to client: Y N

ANALYSTS SERVICES, INC.

P. O. BOX 4352
HOUSTON, TX 77210

12715 ROYAL DRIVE
STAFFORD, TX 77477

DATE: 5-7-92

FAX # DIALED: 512/339-9959

TO: DAN MARTIN

COMPANY: TANK SYSTEMS INC.

FROM: NADER SORURBAKHSH

NO. OF PAGES:
(Includes this sheet) 6

SUBJECT: TEST RESULTS

MESSAGE

CLIENT : CCNAS Site 305 Resample

SITE NAME:

PROJECT :

LAB NUMBERS: 541658 TO 541661

If you do not receive all of the pages listed, please contact us at:

FAX #: (713) 240-4481

PHONE: (713) 240-3042

TOLL FREE: (800) 248-7778

ALYSTS SERVICES, INC.
P. O. BOX 4352
HOUSTON, TEXAS 77210
713/240-3042

COMPANY

Tank Systems, Inc.
Attn: Dan Martin
2112 Rutland Drive
Austin, Texas 78758

LAB INFORMATION

DATE: 07 MAY, 1992

LAB NO: 54658

SAMPLE INFORMATION

CLIENT: CCNAS SITE 305 - RESAMPLE

SITE:

PROJECT:

SAMPLE I.D.: S-1 EAST WALL 6' 5/5 0820
(6' deep)

RESULTS

METER	METHOD NO.	DATE	TIME	ANALYSTS	RESULTS
ZENE	624/8020	05-07-92	3:30pm	LZ	<1.0 mg/Kg
TOLUENE	624/8020	05-07-92	3:30pm	LZ	6.0 mg/Kg
ETHYLBENZENE	624/8020	05-07-92	3:30pm	LZ	<1.0 mg/Kg
XYLENE	624/8020	05-07-92	3:30pm	LZ	117.0 mg/Kg
TPH	418.1	05-07-92	3:30pm	LZ	4250.0 mg/Kg
TCLP BENZENE CONTENT	-	05-07-92	3:30pm	LZ	<.25 mg/Kg
TOTAL LEAD	3020	05-07-92	3:30pm	LZ	<5.0 mg/Kg
EP (TOX) LEAD	1310	05-07-92	3:30pm	LZ	<1.0 mg/Kg
TOTAL ORGANIC HALOGENS, ppm	9020	05-07-92	3:30pm	LZ	<1.0 mg/Kg

REPORTED BY:

ANALYSTS SERVICES, INC.

ANALYSTS SERVICES, INC.
P. O. BOX 4352
HOUSTON, TEXAS 77210
713/240-3042

COMPANY

Tank Systems, Inc.
Attn: Dan Martin
2112 Rutland Drive
Austin, Texas 78758

LAB INFORMATION

DATE: 07 MAY, 1992

LAB NO: 54659

SAMPLE INFORMATION

CLIENT: CCNAS SITE 305 - RESAMPLE

SITE:

PROJECT:

SAMPLE I.D.: S-3 ~~WEST~~ S. W. South WALL 6' 5/5 0829

RESULTS

PARAMETER	METHOD NO.	DATE	TIME	ANALYSTS	RESULTS
BENZENE	624/8020	05-07-92	3:30pm	LZ	<1.0 mg/Kg
TOLUENE	624/8020	05-07-92	3:30pm	LZ	<1.0 mg/Kg
ETHYLBENZENE	624/8020	05-07-92	3:30pm	LZ	<1.0 mg/Kg
XYLENE	624/8020	05-07-92	3:30pm	LZ	110.0 mg/Kg
TPH	418.1	05-07-92	3:30pm	LZ	2840.0 mg/Kg
TCLP BENZENE CONTENT	-	05-07-92	3:30pm	LZ	<.25 mg/Kg
TOTAL LEAD	3020	05-07-92	3:30pm	LZ	<5.0 mg/Kg
EP (TOX) LEAD	1310	05-07-92	3:30pm	LZ	<1.0 mg/Kg
TOTAL ORGANIC HALOGENS, ppm	9020	05-07-92	3:30pm	LZ	<1.0 mg/Kg

REPORTED BY: [illegible]

ANALYSTS SERVICES, INC.

ANALYSTS SERVICES, INC.
P. O. BOX 4352
HOUSTON, TEXAS 77210
713/240-3042

COMPANY

Tank Systems, Inc.
Attn: Dan Martin
2112 Rutland Drive
Austin, Texas 78758

LAB INFORMATION

DATE: 07 MAY, 1992

LAB NO: 54660

SAMPLE INFORMATION

CLIENT: CCNAS SITE 305 - RESAMPLE

SITE:

PROJECT:

SAMPLE I.D.: S-3 WEST WALL 6' 5/5 0840

RESULTS

PARAMETER	METHOD NO.	DATE	TIME	ANALYSTS	RESULTS
BENZENE	624/8020	05-07-92	3:30pm	LZ	<1.0 mg/Kg
TOLUENE	624/8020	05-07-92	3:30pm	LZ	<1.0 mg/Kg
ETHYLBENZENE	624/8020	05-07-92	3:30pm	LZ	<1.0 mg/Kg
XYLENE	624/8020	05-07-92	3:30pm	LZ	92.0 mg/Kg
TPH	418.1	05-07-92	3:30pm	LZ	2250.0 mg/Kg
TCLP BENZENE CONTENT	-	05-07-92	3:30pm	LZ	<.25 mg/Kg
TOTAL LEAD	3020	05-07-92	3:30pm	LZ	<5.0 mg/Kg
EP (TOX) LEAD	1310	05-07-92	3:30pm	LZ	<1.0 mg/Kg
TOTAL ORGANIC HALOGENS, ppm	9020	05-07-92	3:30pm	LZ	<1.0 mg/Kg

REPORTED BY: [signature]

ANALYSTS SERVICES, INC.

...ALYSTS SERVICES, INC.
P. O. BOX 4352
HOUSTON, TEXAS 77210
713/240-3042

COMPANY

Tank Systems, Inc.
Attn: Dan Martin
2112 Rutland Drive
Austin, Texas 78758

LAB INFORMATION

DATE: 07 MAY, 1992

LAB NO: 54661

SAMPLE INFORMATION

CLIENT: CCNAS SITE 305 - RESAMPLE

SITE:

PROJECT:

SAMPLE I.D.: S-4 NORTH WALL 6' 5/5 0848

RESULTS

AMETER	METHOD NO.	DATE	TIME	ANALYSTS	RESULTS
NZENE	624/8020	05-07-92	3:30pm	LZ	<1.0 mg/Kg
TOLUENE	624/8020	05-07-92	3:30pm	LZ	12.0 mg/Kg
ETHYLBENZENE	624/8020	05-07-92	3:30pm	LZ	<1.0 mg/Kg
XYLENE	624/8020	05-07-92	3:30pm	LZ	147.0 mg/Kg
TPH	418.1	05-07-92	3:30pm	LZ	6500.0 mg/Kg
TCLP BENZENE CONTENT	-	05-07-92	3:30pm	LZ	<.25 mg/Kg
TOTAL LEAD	3020	05-07-92	3:30pm	LZ	<5.0 mg/Kg
EP (TOX) LEAD	1310	05-07-92	3:30pm	LZ	<1.0 mg/Kg
TOTAL ORGANIC HALOGENS, ppm	9020	05-07-92	3:30pm	LZ	<1.0 mg/Kg

REPORTED BY:

ANALYSTS SERVICES, INC.

ANALYSTS SERVICES, ...C.

12715 ROYAL DRIVE
STAFFORD, TEXAS 77477

CHAIN OF CL DY

Date 5-5-92 Page 1 of 1

Lab Number

CLIENT Trust Systems Inc
ADDRESS 505 W. YAGER LANE
AUSTIN, TEXAS 78753
PROJECT NAME
CCWAS Site #305 - RESAMPLE
CONTRACT/PURCHASE ORDER/QUOTE #

PROJECT MANAGER
Mike Luckie
PHONE NUMBER
512- 339-9953
FAX NUMBER 335-9959
SITE CONTACT

ANALYSIS

Pit # 305 Sample No. Identification	Date	Time	Lab Sample Number	SAMPLE TYPE LIQ.	AIR	SOLID	No. of Containers	TPH	BTEX	TOTAL Lead	GP Tox Lead	Tclp Benzene	TOH	Sample Condition REMARKS
S-1 EAST WALL 6'	5-5-92	0820	54658			X	1	X	X	X	X	X	X	
S-2 South WALL 6'	"	0829	54659			X	1	X	X	X	X	X	X	
S-3 WEST WALL 6'	"	0840	54660			X	1	X	X	X	X	X	X	
S-4 NORTH WALL 6'	"	0848	54661			X	1	X	X	X	X	X	X	
~~S-5 Rabbit~~														

SAMPLERS: (Signature)

Received by: (Signature) Date Time

Relinquished by: (Signature) Received by: (Signature) Date Time

Relinquished by: (Signature) Date 5-5-92 Time 0850 Received for Laboratory by: Date RECEIVED Time

Method of Shipment:

Special Instructions:

SAMPLE DISPOSITION:
1. Storage time requested: _____ days
(Samples will be stored for 30 days without additional charges; thereafter storage charges will be billed at the published rates.)
2. Sampler to be returned to client: Y N

Received 12-1-92 (
Ted Hodgen

TANK SYSTEMS INCORPORATED
An Environmental Corporation

Soil Samples taken @
35 feet deep

		TPH
C-1	13'-8"	445 ppm
C-2	21'-3"	19375 ppm
C-3	29'-4"	120 ppm
C-4	31'	310 ppm
C-5	41'	230 ppm
C-6	31'	5875 ppm
C-7	25'	795 ppm
C-8	25'	729 ppm
C-9	13'	1989 ppm

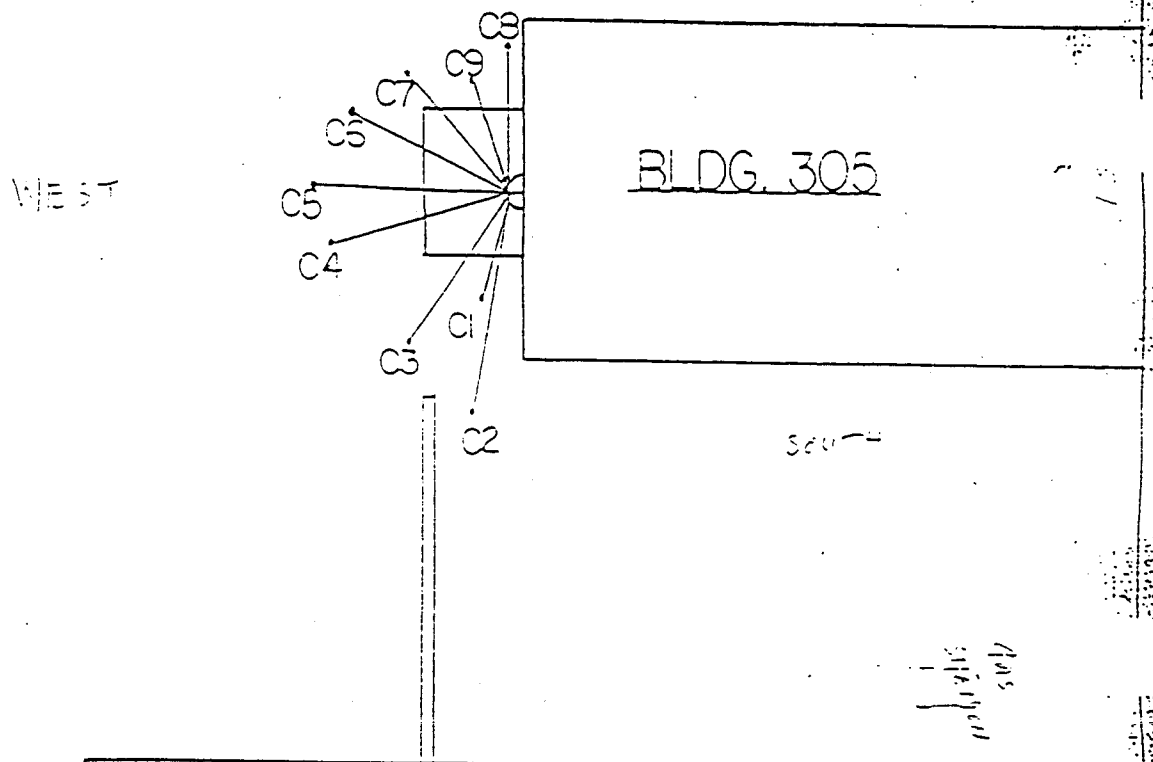

TSI An Environmental Corporation

Bldg. 305

UST Remediation Program

SCALE

DRAWN BY

REVISED

SAMPLE LOCATION SKETCH

DATE 9-21-92

APPROVED BY

DRAWING NUMBER

ALBANENE © 10 5455

ANALYSTS SERVICES, INC
P.O. BOX 2552
HOUSTON, TEXAS 77210
713/240-3042

COMPANY

Tank Systems, Inc.
Attn: Bernay Sheffield
505 W Yager Lane
Austin, Texas 78758

LAB INFORMATION

DATE: 30 SEPTEMBER, 1992

LAB NO: 55706

SAMPLE INFORMATION

CLIENT: CCNAS - BLDG 305

SITE:

PROJECT: CORPUS CHRISTI, TX

SAMPLE I.D.: C-1 9/26

RESULTS

PARAMETER	METHOD NO.	DATE	TIME	ANALYSTS	RESULTS
BENZENE	624/8020	09-30-92	5:00pm	AP	<1.0 mg/Kg
TOLUENE	624/8020	09-30-92	5:00pm	AP	<1.0 mg/Kg
ETHYLBENZENE	624/8020	09-30-92	5:00pm	AP	<1.0 mg/Kg
XYLENE	624/8020	09-30-92	5:00pm	AP	<1.0 mg/Kg
TPH	418.1	09-30-92	5:00pm	AP	445.0 mg/Kg

REPORTED BY:

ANALYSTS SERVICES, INC.

ANALYSTS SERVICES, INC.
P.O. BOX 2352
HOUSTON, TEXAS 77210
713/240-3042

COMPANY

Tank Systems, Inc.
Attn: Bernay Sheffield
505 W Yager Lane
Austin, Texas 78758

LAB INFORMATION

DATE: 30 SEPTEMBER, 1992

LAB NO: 55787

SAMPLE INFORMATION

CLIENT: CCNAS - BLDG 305

SITE:

PROJECT: CORPUS CHRISTI, TX

SAMPLE I.D.: C-2 9/26

RESULTS

RAMETER	METHOD NO	DATE	TIME	ANALYSTS	RESULTS
ENZENE	624/8020	09-30-92	5:00pm	AP	<10.0 mg/Kg
TOLUENE	624/8020	09-30-92	5:00pm	AP	24.0 mg/Kg
ETHYLBENZENE	624/8020	09-30-92	5:00pm	AP	16.0 mg/Kg
XYLENE	624/8020	09-30-92	5:00pm	AP	42.0 mg/Kg
TPH	418.1	09-30-92	5:00pm	AP	19375.0 mg/Kg

REPORTED BY:

ANALYSTS SERVICES, INC.

ANALYSTS SERVICES, INC.
P.O. BOX 14352
HOUSTON, TEXAS 77210
713/240-3042

COMPANY

Tank Systems, Inc.
Attn: Bernay Sheffield
505 W Yager Lane
Austin, Texas 78758

LAB INFORMATION

DATE: 30 SEPTEMBER, 1992

LAB NO: 55788

SAMPLE INFORMATION

CLIENT: CCNAS - BLDG 305

SITE:

PROJECT: CORPUS CHRISTI, TX

SAMPLE I.D.: C-3 9/26

RESULTS

PARAMETER	METHOD NO.	DATE	TIME	ANALYSTS	RESULTS
BENZENE	624/8020	09-30-92	5:00pm	AP	<1.0 mg/Kg
TOLUENE	624/8020	09-30-92	5:00pm	AP	<1.0 mg/Kg
ETHYLBENZENE	624/8020	09-30-92	5:00pm	AP	<1.0 mg/Kg
XYLENE	624/8020	09-30-92	5:00pm	AP	<1.0 mg/Kg
TPH	418.1	09-30-92	5:00pm	AP	120.0 mg/Kg

REPORTED BY:

ANALYSTS SERVICES, INC.

ANALYSTS SERVICES, INC.
P. O. BOX 4252
HOUSTON, TEXAS 77210
713/240-3042

COMPANY

Tank Systems, Inc.
Attn: Bernay Sheffield
505 W Yager Lane
Austin, Texas 78758

LAB INFORMATION

DATE: 30 SEPTEMBER, 1992

LAB NO: 55789

SAMPLE INFORMATION

CLIENT: CCNAS - BLDG 305

SITE:

PROJECT: CORPUS CHRISTI, TX

SAMPLE I.D.: C-4 9/26

RESULTS

PARAMETER	METHOD NO.	DATE	TIME	ANALYSTS	RESULTS
BENZENE	624/8020	09-30-92	5:00pm	AP	<1.0 mg/kg
TOLUENE	624/8020	09-30-92	5:00pm	AP	<1.0 mg/kg
ETHYLBENZENE	624/8020	09-30-92	5:00pm	AP	<1.0 mg/kg
XYLENE	624/8020	09-30-92	5:00pm	AP	3.0 mg/kg
TPH	418.1	09-30-92	5:00pm	AP	310.0 mg/kg

REPORTED BY: [signature]

ANALYSTS SERVICES, INC.

ANALYSTS SERVICES, INC.
P. O. BOX 4352
HOUSTON, TEXAS 77210
713/240-3042

COMPANY

Tank Systems, Inc.
Attn: Bernay Sheffield
505 W Yager Lane
Austin, Texas 78758

LAB INFORMATION

DATE: 30 SEPTEMBER, 1992

LAB NO: 55790

SAMPLE INFORMATION

CLIENT: CCNAS - BLDG 305

SITE:

PROJECT: CORPUS CHRISTI, TX

SAMPLE I.D.: C-5 9/26

RESULTS

PARAMETER	METHOD NO	DATE	TIME	ANALYSTS	RESULTS
BENZENE	624/8020	09-30-92	5:00pm	AP	<1.0 mg/Kg
TOLUENE	624/8020	09-30-92	5:00pm	AP	<1.0 mg/Kg
ETHYLBENZENE	624/8020	09-30-92	5:00pm	AP	<1.0 mg/Kg
XYLENE	624/8020	09-30-92	5:00pm	AP	<1.0 mg/Kg
TPH	418.1	09-30-92	5:00pm	AP	230.0 mg/Kg

REPORTED BY:

ANALYSTS SERVICES, INC.

ANALYSTS SERVICES, INC.
P. O. BOX 4352
HOUSTON, TEXAS 77210
713/240-3042

COMPANY

Tank Systems, Inc.
Attn: Bernay Sheffield
505 W Yager Lane
Austin, Texas 78758

LAB INFORMATION

DATE: 30 SEPTEMBER, 1992

LAB NO: 55791

SAMPLE INFORMATION

CLIENT: CCNAS - BLDG 305

SITE:

PROJECT: CORPUS CHRISTI, TX

SAMPLE I.D.: C-[illegible] 9/26

RESULTS

PARAMETER	METHOD NO.	DATE	TIME	ANALYSTS	RESULTS
BENZENE	624/8020	09-30-92	5:00pm	AP	<1.0 mg/Kg
TOLUENE	624/8020	09-30-92	5:00pm	AP	9.0 mg/Kg
ETHYLBENZENE	624/8020	09-30-92	5:00pm	AP	14.0 mg/Kg
XYLENE	624/8020	09-30-92	5:00pm	AP	27.0 mg/Kg
TPH	418.1	09-30-92	5:00pm	AP	5875.0 mg/Kg

REPORTED BY: [signature]

ANALYSTS SERVICES, INC.

ANALYSTS SERVICES, INC.
P.O. BOX 4352
HOUSTON, TEXAS 77210
713/240-3042

COMPANY

Tank Systems, Inc.
Attn: Bernay Sheffield
505 W Yager Lane
Austin, Texas 78758

LAB INFORMATION

DATE: 30 SEPTEMBER, 1992

LAB NO: 55792

SAMPLE INFORMATION

CLIENT: CCNAS - BLDG 305

SITE:

PROJECT: CORPUS CHRISTI, TX

SAMPLE I.D.: C-7 9/26

RESULTS

PARAMETER	METHOD NO.	DATE	TIME	ANALYSIS	RESULTS
BENZENE	624/8020	09-30-92	5:00pm	AP	<1.0 mg/Kg
TOLUENE	624/8020	09-30-92	5:00pm	AP	5.0 mg/Kg
ETHYLBENZENE	624/8020	09-30-92	5:00pm	AP	2.0 mg/Kg
XYLENE	624/8020	09-30-92	5:00pm	AP	11.0 mg/Kg
TPH	418.1	09-30-92	5:00pm	AP	785.0 mg/Kg

REPORTED BY:

ANALYSTS SERVICES, INC.

ANALYSTS SERVICES, INC.
P. O. BOX 4352
HOUSTON, TEXAS 77210
713/240-3042

COMPANY

Tank Systems, Inc.
Attn: Bernay Sheffield
505 W Yager Lane
Austin, Texas 78758

LAB INFORMATION

DATE: 30 SEPTEMBER, 1992

LAB NO: 55793

SAMPLE INFORMATION

CLIENT: CCNAS BLDG 305

SITE:

PROJECT: CORPUS CHRISTI, TX

SAMPLE I.D.: C-8 9/26

RESULTS

RAMETER	METHOD NO	DATE	TIME	ANALYSIS	RESULTS
BENZENE	624/8020	09 30-92	5:00pm	AP	<1.0 mg/Kg
TOLUENE	624/8020	09-30-92	5:00pm	AP	2.0 mg/Kg
ETHYLBENZENE	624/8020	09-30-92	5:00pm	AP	<1.0 mg/Kg
XYLENE	624/8020	09-30-92	5:00pm	AP	8.0 mg/Kg
TPH	413.1	09-30-92	5:00pm	AP	729.0 mg/Kg

REPORTED BY: [signature]

ANALYSTS SERVICES, INC.

ANALYSTS SERVICES, INC.
P.O. BOX 2352
HOUSTON, TEXAS 77210
713/240-3042

COMPANY

Tank Systems, Inc.
Attn: Bernay Sheffield
505 W Yager Lane
Austin, Texas 78758

LAB INFORMATION

DATE: 30 SEPTEMBER, 1992

LAB NO: 55794

SAMPLE INFORMATION

CLIENT: CCNAS - BLDG 305

SITE:

PROJECT: CORPUS CHRISTI, TX

SAMPLE I.D.: C-9 9/27

RESULTS

RAMETER	METHOD NO	DATE	TIME	ANALYSTS	RESULTS
BENZENE	624/8020	09-30-92	5:00pm	AP	<1.0 mg/Kg
TOLUENE	624/8020	09-30-92	5:00pm	AP	6.0 mg/Kg
ETHYLBENZENE	624/8020	09-30-92	5:00pm	AP	12.0 mg/Kg
XYLENE	624/8020	09-30-92	5:00pm	AP	21.0 mg/Kg
TPH	418.1	09-30-92	5:00pm	AP	1989.0 mg/Kg

REPORTED BY:

ANALYSTS SERVICES, INC.

QA/QC DATA

LE I.D. C-7 9/36

LAB NO. 55792 DATE 09-30-92

PARAMETER	RESULTS	DUPLICATE	SAMPLE + SPIKE	SPIKE	%RECOVERY
BENZENE	<1.0	<1.0	9.1	10	91
TOLUENE	5.0	4.0	14.0	10	93
ETHYLBENZENE	2.0	2.0	11.0	10	92
XYLENE	11.0	9.0	18.0	10	86
TPH	785	745	791	50	95

® ANALYSTS SERVICES, C.

12715 ROYAL DRIVE
STAFFORD, TEXAS 77477

CHAIN OF CUSTODY

Date 9-28-92 Page 1 of 1

Lab Number

CLIENT: TANK SYSTEMS INC
ADDRESS: 1011 WATER LAN
AUSTIN TX. 78753
PROJECT NAME: AMIAC Bldg #305
CONTRACT/PURCHASE ORDER/QUOTE #

PROJECT MANAGER
PHONE NUMBER
FAX NUMBER
SITE CONTACT

ANALYSIS: TPH, BTEX

Sample No. Identification	Date	Time	Lab Sample Number	SAMPLE TYPE LIQ.	AIR	SOLID	No. of Containers	TPH	BTEX	Sample Condition REMARKS
C-1	9/24		55786			✓	1	✓	✓	
C-2	9/24		55787			✓	1	✓	✓	
C-3	9/24		55788			✓	1	✓	✓	
C-4	9/24		55789			✓	1	✓	✓	
C-5	9/24		55790			✓	1	✓	✓	
C-6	9/24		55791			✓	1	✓	✓	
C-7	9/24		55792			✓	1	✓	✓	
C-8	9/27		55793			✓	1	✓	✓	
C-9	9/27		55794			✓	1	✓	✓	

SAMPLERS: (Signature)	Received by: (Signature)	Date	Time
Relinquished by: (Signature)	Received by: (Signature)	Date	Time

Relinquished by: (Signature)	Date	Time	Received for Laboratory by:	Date RECEIVED	Time
				9/29	10:15

Method of Shipment:

Special Instructions:

SAMPLE DISPOSITION:
1. Storage time requested: _____ days
(Samples will be stored for 30 days without additional charges; thereafter storage charges will be billed at the published rates.)
2. Sampler to be returned to client: Y N

CERTIFICATE OF DATE DESTROYED

ATTENTION: TANK SYSTEMS

FROM: TEXAS TANK DESTROYAL

Let it be known that on this date 4-23-92 the tanks listed on invoice number 1058 were picked up from CORPUS CHRISTI, TX NAVAL AIR STATI by TEXAS TANK DESTROYAL and were delivered to Venus, Texas. As of this date 5-7-92 the tanks listed by the reference numbers below have been destroyed for scrap. Record of this destroyal will be maintained for any future reference.

Reference numbers

3046 Tank 305

SIGNED Melissa Behrens

NOTARY SEAL
SUBSCRIBED AND SWORN TO BEFORE ME THIS 11 DAY OF May 1992
NOTARY PUBLIC Mariza Esquivel

MARISA ESQUIVEL
NOTARY PUBLIC
STATE OF TEXAS
Commission Expires 9-6-94

ENCL (5)

1 MAR 1993

John Hall, Chairman
Pam Reed, Commissioner
Peggy Garner, Commissioner

TEXAS WATER COMMISSION

PROTECTING TEXANS' HEALTH AND SAFETY BY PREVENTING AND REDUCING POLLUTION

February 23, 1993

CERTIFIED MAIL

Mr. Dilip Shaw
Corpus Christi Naval Air Station
Navy Public Works, Environmental Division
Building 19, Code 189
Corpus Christi, Texas 78419-5500

Re: Subsurface Hydrocarbon Contamination at the Navy Exchange Gas Station, Building 1263, N.A.S. Drive, Corpus Christi (Nueces County), Texas
(LPST ID No. 105847)

Dear Mr. Shaw:

This Office became aware of the above-referenced release through information contained in the preliminary lab reports received in this Office on February 9, 1993. A Leaking Petroleum Storage Tank (LPST) Incident Report has been completed and the LPST Number for this incident is referenced above. This Office will be responsible for regulatory coordination in association with this facility unless you are advised otherwise in writing by the TWC.

The Texas Water Commission (TWC) is responsible for protecting waters in the state as well as public health and safety from contamination that may result when a release occurs from a storage tank system. Title 31, Texas Administrative Code (TAC), Section 334.71-334.85 requires the owner or operator of a storage tank system to immediately abate any release of a regulated substance and investigate for soil and groundwater cleanup.

To comply with these regulations, you are requested to conduct a Limited Site Assessment (LSA) as described in the enclosed *Limited Site Assessment Guidance Document*. Please submit the enclosed *Limited Site Assessment Report Form* and an LSA report to document your findings.

Please notify any affected landowner(s) if you determine that contaminants released from your storage tank system have migrated off of your property as required by 31 TAC 334.82(b).

You are required to notify Ms. Christine Heikkila of our District 12 Field Office in Corpus Christi at (512) 851-8484 at least forty-eight (48) hours in advance of drilling the soil borings and any other significant site work for the LSA. All vapor emissions that might be associated with this release or your response activities must be controlled and monitored to protect human health and safety.

The requested LSA report is due forty-five (45) days from the date of this letter. **An extension to the established time frame may only be granted by verbal request to the coordinator assigned to this case.** The coordinator will ask for: a reason for the extension, a schedule for implementing the remaining activities, and a summary of all activities completed to date. Written documentation of this information and the new due date for the report must subsequently be provided to this Office.

Please refer to our *Limited Site Assessment Guidance Document* for additional information to aid you in addressing this matter.

A copy of your response or any other correspondence with this Office must also be provided to the local TWC District Field Office. **Please include the LPST ID Number on all correspondence to enable us to respond to you promptly.** If you have any questions or require guidance regarding this matter, please contact Ms. Liz Scaggs of my staff at 512/908-2234. We appreciate your cooperation.

Sincerely,

Janet Koock

Janet Koock
Manager, Remediation Unit I
Responsible Party Remediation Section
Petroleum Storage Tank Division

LAS/cma
105847.lad

Enclosures

cc: Christine Heikkila, TWC District 12 Field Office
David Harvey, TWC District 12 Field Office
(4410 Dillon Ln., Ste. 47, Corpus Christi, TX 78415-5326)

John Hall, Chairman
Pam Reed, Commissioner
Peggy Garner, Commissioner

11 FEB 1993

TEXAS WATER COMMISSION

PROTECTING TEXANS' HEALTH AND SAFETY BY PREVENTING AND REDUCING POLLUTION

February 9, 1993

Mr. Terry Boone
Corpus Christi Naval Air Station
Navy Public Works,
Environmental Division
Bldg. 19, Code 189
Corpus Christi, Texas 78419-55000

Re: Removal of Underground Storage Tank Near Building 305, (Tank 305), Corpus Christi Naval Air Station, Corpus Christi, Texas
Texas Water Commission Solid Waste Registration No. 30479

Dear Mr. Boone:

The TWC District 12 office requests additional information concerning the above referenced activity. Specifically:

1. The age, volume, material of construction, and material stored in Tank 305;

2. The sequence of events leading to the discovery and subsequent removal of the UST;

3. The condition of the UST and associated piping upon excavation;

4. The handling, transportation, and disposal of any contaminated soils and/or fluid removed from the UST, including names and addresses of all contractors, transporters, and disposal facilities involved;

5. Any laboratory analyses or hazardous waste determinations on the fluid removed from the tank or any contaminated soil;

6. And the handling, transportation, and disposal of the UST and related piping. Once again, including names and addresses of personnel involved.

Please submit the requested information to this office within 30 days of the date of this letter. If you have any questions, please contact David Harvey of my staff at 512/851-8484. Your cooperation is appreciated.

Sincerely,

Carlton H. Stanley

Carlton H. Stanley
District Manager

DDH/cgm

AMENDMENT OF SOLICITATION / MODIFICATION OF CONTRACT

1. CONTRACT ID CODE: 00-91-9036

PAGE 1 OF 2 PAGES

AMENDMENT/MODIFICATION NO.	3. EFFECTIVE DATE	4. REQUISITION/PURCHASE REQ. NO.	5. PROJECT NO. (If applicable)
P00001	SEE BLOCK 16C	N0021692RC00028	

6. ISSUED BY — CODE

OFFICER IN CHARGE OF CONSTRUCTION
TEXAS AREA
BLDG 19, NAVAL AIR STATION
CORPUS CHRISTI, TEXAS 78419-5224

7. ADMINISTERED BY (If other than Item 6) — CODE CREQ

8. NAME AND ADDRESS OF CONTRACTOR (No., street, county, State and ZIP Code)

TANK SYSTEMS, INC.
2112 RUTLAND DRIVE, #175
AUSTIN, TEXAS 78758

CODE — FACILITY CODE

(V)

9A. AMENDMENT OF SOLICITATION NO.

9B. DATED (SEE ITEM 11)

10A. MODIFICATION OF CONTRACT/ORDER NO.
N62467-91-C-9036

10B. DATED (SEE ITEM 13)
27 SEPT 1991

11. THIS ITEM ONLY APPLIES TO AMENDMENTS OF SOLICITATIONS

The above numbered solicitation is amended as set forth in Item 14. The hour and date specified for receipt of Offers ☐ is extended, ☐ is not extended.

Offerors must acknowledge receipt of this amendment prior to the hour and date specified in the solicitation or as amended, by one of the following methods: (a) By completing Items 8 and 15, and returning _____ copies of the amendment; (b) By acknowledging receipt of this amendment on each copy of the offer submitted; or (c) By separate letter or telegram which includes a reference to the solicitation and amendment numbers. FAILURE OF YOUR ACKNOWLEDGMENT TO BE RECEIVED AT THE PLACE DESIGNATED FOR THE RECEIPT OF OFFERS PRIOR TO THE HOUR AND DATE SPECIFIED MAY RESULT IN REJECTION OF YOUR OFFER. If by virtue of this amendment you desire to change an offer already submitted, such change may be made by telegram or letter, provided each telegram or letter makes reference to the solicitation and this amendment, and is received prior to the opening hour and date specified.

12. ACCOUNTING AND APPROPRIATION DATA (If required)

AA 1721804.6282 000 00216 0 068566 2D 000000 N002162LCAAD $4,505.50 INCREASE

13. THIS ITEM APPLIES ONLY TO MODIFICATIONS OF CONTRACTS/ORDERS, IT MODIFIES THE CONTRACT/ORDER NO. AS DESCRIBED IN ITEM 14.

A. THIS CHANGE ORDER IS ISSUED PURSUANT TO: (Specify authority) THE CHANGES SET FORTH IN ITEM 14 ARE MADE IN THE CONTRACT ORDER NO. IN ITEM 10A.

B. THE ABOVE NUMBERED CONTRACT/ORDER IS MODIFIED TO REFLECT THE ADMINISTRATIVE CHANGES (such as changes in paying office, appropriation date, etc.) SET FORTH IN ITEM 14, PURSUANT TO THE AUTHORITY OF FAR 43.103(b).

C. THIS SUPPLEMENTAL AGREEMENT IS ENTERED INTO PURSUANT TO AUTHORITY OF:
The "Changes" Clause and as mutually agreed upon by both parties.

D. OTHER (Specify type of modification and authority)

IMPORTANT: Contractor ☐ is not, ☒ is required to sign this document and return 2 copies to the issuing office.

14. DESCRIPTION OF AMENDMENT/MODIFICATION (Organized by UCF section headings, including solicitation/contract subject matter where feasible.)

0001, N62467-91-C-9036, REMOVE AND/OR REPLACE UNDERGROUND STORAGE TANKS, NAS, CORPUS CHRISTI, TX

This modification is issued to incorporate the following changes into the subject contract.

The contractor shall provide all labor, material and equipment necessary to:

(1) Remove and dispose of underground storage tank at Bldg. 305.

(2) Remove and dispose of underground storage tank at Facility W1. Delete close tank in place.

(3) Remove and dispose of underground storage tank at Bldg. 1244. Delete close tank in place.

(CONTINUED ON PAGE 2)

Except as provided herein, all terms and conditions of the document referenced in Item 9A or 10A, as heretofore changed, remains unchanged and in full force and effect.

15A. NAME AND TITLE OF SIGNER (Type or print)
Elvis O'Neal, Project Manager

15B. CONTRACTOR/OFFEROR
BY Elvis O'Neal
(Signature of person authorized to sign)

15C. DATE SIGNED
3-24-92

16A. NAME AND TITLE OF CONTRACTING OFFICER (Type or print)
CHARLOTTE CUMMINS
CONTRACTING OFFICER

16B. UNITED STATES OF AMERICA
BY Charlotte Cummins
(Signature of Contracting Officer)

16C. DATE SIGNED
1/2/92

APPENDIX J

SWMU 10

TCB Associates

ENGINEERS • PLANNERS

3833 S. Staples, Suite 67
P.O. Box 6778
Corpus Christi, Texas
78466-6778
512 • 855-2504

July 27, 1994

RECEIVED
JUL 28 1994

Mr. Jim Boatman, P.E.
Public Works/Engineering
Environmental Division
Building 19
Naval Air Station
Corpus Christi, Texas 78415

Dear Mr. Boatman:

Per your instructions and in accordance with our contract No. N-62467-93-D-7544, we have recently completed a search for a radioactive disposal container in the general location of the north entrance gate at N.A.S. Corpus Christi. The search was conducted as follows:

1. A point was established 100 yards southwest of the north entrance gate to the base and adjacent to an asphalt road that is known as the Jet Engine Testing Cells Road. This point is the general location contained in the information we were provided regarding the disposal container.

2. An area 200′ x 200′, centered on this point, was then laid off and this search area was divided into 20′ x 20′ squares and numbered 1 thru 100 per the attached field sketch.

3. Each sub area (20′ x 20′) was searched, with a Schonstedt Model 52-A metal detector, in an effort to locate the manhole lid which is believed to cover the container.

4. All signals indicated by the metal detector were investigated by hand excavation to determine the origin of the signal.

The only metallic material located in the search was the waterline running through the search area which was already known to exist prior to the search. No other signals were detected, and we found no evidence of the manhole top, rim, or any other metallic material that might be covering the disposal canister.

Sincerely yours,
TCB Associate

Patrick W. Coym
Professional Engineer

PWC/bb

Enclosure

COYM & REHMET
ENGINEERING CO. INC.
1220 N. Texas Blvd. Suite 4
ALICE, TEXAS 78332
(512) 664-5821

JOB
SHEET NO. OF
CALCULATED BY DATE 7-11-94
CHECKED BY DATE
SCALE 1" = 40'

NAS Corpus Christi
Waste Disposal Canisters
Search Grid

ENTRANCE GATE

Waterline

1	2	3	4	5	6	7	8	9	10
11	12	13	14	15	16	17	18	19	20
21	22	23	24	25	26	27	28	29	30
31	32	33	34	35	36	37	38	39	40
41	42	43	44	45	46	47	48	49	50
51	52	53	54	55	56	57	58	59	60
61	62	63	64	65	66	67	68	69	70
71	72	73	74	75	76	77	78	79	80
81	82	83	84	85	86	87	88	89	90
91	92	93	94	95	96	97	98	99	100

Rd

nail set
100 yds
S.W. of
Entrance Gate

PRODUCT 204-1 NEBS Inc., Groton, Mass. 01471.