N62604.AR.000393
NCBC GULFPORT
5090.3a

PERFORMANCE SPECIFICATION SITE 6 NCBC GULFPORT MS
12/1/1994
ABB

NCBC Gulfport Administrative Record
Document Index Number

39501 - IRP
18.02.06.0007

# PERFORMANCE SPECIFICATION
# SITE 6, FIRE-FIGHTING TRAINING AREA

## NAVAL CONSTRUCTION BATTALION CENTER GULFPORT
## GULFPORT, MISSISSIPPI

**Unit Identification Code (UIC): N62604**

**Contract No. N62467-89-D-0317**

**Prepared by:**

**ABB Environmental Services, Inc.**
**2590 Executive Center Circle, East**
**Tallahassee, Florida 32301**

**Prepared for:**

**Department of the Navy, Southern Division**
**Naval Facilities Engineering Command**
**2155 Eagle Drive**
**North Charleston, South Carolina 29419**

**Art Conrad, Code 1865, Remedial Project Manager**

**December 1994**

# FOREWORD

To meet its mission objectives, the U.S. Navy performs a variety of operations, some requiring the use, handling, storage, or disposal of hazardous materials. Through accidental spills and leaks and conventional methods of past disposal, hazardous materials may have entered the environment in ways unacceptable by today's standards. With growing knowledge of the long-term effects of hazardous materials on the environment, the Department of Defense initiated various programs to investigate and remediate conditions related to suspected past releases of hazardous materials at their facilities.

One of these programs is the Installation Restoration (IR) program. This program complies with the Comprehensive Environmental Response, Compensation, and Liability Act (CERCLA), as amended by the Superfund Amendments and Reauthorization Act (SARA). The acts, passed by Congress in 1980 and 1986, respectively, established the means to assess and cleanup hazardous waste sites for both private-sector and Federal facilities. These acts are the basis for what is commonly known as the Superfund program.

The IR program is conducted in several stages.

- The Preliminary Assessment (PA) identifies potential sites through record searches and interviews.

- A Site Inspection (SI) then confirms which areas contain contamination, constituting actual "sites."

- Next, the Remedial Investigation and the Feasibility Study (RI/FS) together determine the type and extent of contamination, establish criteria for cleanup, and identify and evaluate any necessary remedial action alternatives and their costs. As part of the RI/FS, a Risk Assessment identifies potential effects on human health or the environment to help evaluate remedial action alternatives.

- The selected alternative is planned and conducted in the Remedial Design and Remedial Action Stages. Monitoring then ensures the effectiveness of the effort.

This document presents the performance requirements for a free-phase product recovery with associated groundwater treatment system to recover floating product

at Site 6, a former fire-fighting training area located at Naval Construction Battalion Center, Gulfport, Mississippi. Recovery of the floating product is being accomplished under the U.S. Navy's IR program in coordination with the State of Mississippi's Department of Environmental Quality and Region IV U.S. Environmental Protection Agency.

Southern Division, Naval Facilities Engineering Command (SOUTHNAVFACENGCOM), has the responsibility for implementation of the Navy and Marine Corps IR program in the southeastern and midwestern United States. Questions regarding this document should be addressed to the SOUTHNAVFACENGCOM Remedial Project Manager, Mr. Art Conrad, at (803) 743-0520.

## EXECUTIVE SUMMARY

ABB Environmental Services, Inc. (ABB-ES), under contract to Southern Division, Naval Facilities Engineering Command (SOUTHNAVFACENGCOM), has prepared this Performance Specification for Site 6, former Fire-Fighting Training Area, located at Naval Construction Battalion Center (NCBC), Gulfport, Mississippi. This document was prepared under the Comprehensive Long-Term Environmental Action, Navy (CLEAN) Contract No. N62467-89-D-0317 as Contract Task Order No. 096.

This document presents the assumptions, parameters, and performance requirements for a product recovery with associated groundwater treatment system at Site 6, a former fire-fighting training area. The purpose of the document is to identify the various conceptual components of the free-phase product recovery with associated groundwater treatment system, describe their purpose, discuss the pertinent application considerations, and provide information on performance requirements for the major components. The objective of the system is to recover free-phase product to the extent practicable. Groundwater will be recovered and treated as well, but this is incidental to the primary purpose of free-phase product recovery. Other contaminated media at Site 6 will be addressed in the future, as applicable.

The free-phase product recovery system moves the free-phase product from the shallow aquifer using a trench with three collector wells equipped with total fluid pumps. The product and groundwater stream is transferred to an oil and water separator where the product is separated from the groundwater and transferred to a product storage tank for eventual disposal. The groundwater is treated using an air stripping technology and will be discharged, upon approval, to the publicly owned treatment works.

The primary elements of this document include an engineering analysis, site layout, trench and collector well design, piping and instrumentation diagrams, and performance specifications for all major equipment.

These performance specifications will be used by a response action contract (RAC) contractor to describe the details of the final design in their shop submittals (e.g., workplans and drawings) to the Navy. The RAC contractor will be responsible for the choice of methods and materials of construction, as well as equipment specifications necessary to achieve the performance requirements described herein.

# TABLE OF CONTENTS

Performance Specification
Site 6, Fire-Fighting Training Area
Naval Construction Battalion Center Gulfport
Gulfport, Mississippi


| Chapter | Title | Page No. |
|---|---|---|
| 1.0 | INTRODUCTION | 1-1 |
| 2.0 | PERFORMANCE CRITERIA | 2-1 |
| 2.1 | GENERAL PERFORMANCE CRITERIA | 2-1 |
| 2.2 | PERMITTING REQUIREMENTS | 2-1 |
| 2.2.1 | Air | 2-2 |
| 2.2.2 | Publicly Owned Treatment Works (POTW) | 2-5 |
| 2.2.3 | Excavation | 2-6 |
| 2.3 | CONSTRUCTION | 2-6 |
| 2.3.1 | Utility Locations and Access | 2-6 |
| 2.3.2 | Construction Dewatering Considerations | 2-6 |
| 2.3.3 | Monitoring and Recovery Well Locations | 2-7 |
| 2.3.4 | Site Access and Constructability | 2-7 |
| 3.0 | ENGINEERING ANALYSES | 3-1 |
| 3.1 | PERFORMANCE PARAMETERS | 3-1 |
| 3.2 | PRODUCT RECOVERY MODELING | 3-1 |
| 3.3 | RECOVERY TRENCH PARAMETERS | 3-10 |
| 3.4 | SYSTEM PARAMETERS | 3-12 |
| 3.4.1 | Oil and Water Separator | 3-12 |
| 3.4.2 | Air Stripper | 3-13 |
| 3.4.3 | Vapor Treatment | 3-13 |
| 3.4.4 | Effluent Tanks | 3-14 |
| 3.5 | PERFORMANCE WELLS | 3-14 |
| 3.6 | MATERIALS OF CONSTRUCTION | 3-15 |
| 3.7 | RESIDUAL DISPOSAL | 3-16 |
| 4.0 | MONITORING AND SAMPLING PROGRAM | 4-1 |
| 4.1 | RECOVERY SYSTEM OPERATING PARAMETERS AND EFFICIENCIES | 4-1 |
| 4.2 | TREATMENT SYSTEM OPERATING PARAMETERS AND EFFICIENCIES | 4-1 |
| 4.3 | VAPOR EMISSIONS FROM TREATMENT SYSTEM | 4-2 |
| 4.4 | SYSTEM OPERATION, PERFORMANCE, AND MAINTENANCE | 4-2 |
| 4.5 | REPORTING | 4-2 |

REFERENCES

APPENDICES

Appendix A: Drawing Section, Performance Specifications
Appendix B: SCREEN™ Computer Model Documentation and Requirements for Construction Permit and Associated Regulations
Appendix C: Copy of Applications for Discharge to POTW
Appendix D: Excavation Permit
Appendix E: FLOWPATH™ Model Input Parameters and Output Results
Appendix F: Calculations

## LIST OF FIGURES

Performance Specification
Site 6, Fire-Fighting Training Area
Naval Construction Battalion Center Gulfport
Gulfport, Mississippi


| Figure | Title | Page No. |
|---|---|---|
| 3-1 | FLOWPATH™ Grid | 3-8 |


## LIST OF TABLES

Performance Specification
Site 6, Fire-Fighting Training Area
Naval Construction Battalion Center Gulfport
Gulfport, Mississippi


| Tables | Title | Page No. |
|---|---|---|
| 2-1 | Air Stripping Evaluation Worksheet | 2-3 |
| 2-2 | Stack Parameters | 2-4 |
| 3-1 | Aquifer Test Parameters | 3-2 |
| 3-2 | Subsurface Soil Parameters | 3-3 |
| 3-3 | Groundwater Parameters | 3-5 |
| 3-4 | Free-Phase Product Parameters | 3-7 |
| 3-5 | Modeling Assumptions and Input Parameters for FLOWPATH™ Model | 3-9 |
| 3-6 | Granular Filter Pack Material Specifications, Recovery Trench | 3-11 |
| 4-1 | Monitoring and Sampling Schedule, First Year | 4-3 |

## GLOSSARY

| | |
|---|---|
| AASHTO | American Association of State Highway and Transportation Officials |
| ABB-ES | ABB Environmental Services, Inc. |
| ACGIH | American Conference of Governmental and Industrial Hygienists |
| ASTM | American Society for Testing and Materials |
| BTEX | benzene, toluene, ethylbenzene, and xylenes |
| bls | below land surface |
| $BOD_5$ | biological oxygen demand, 5-day |
| BTU | British thermal unit |
| BTU/lb | British thermal unit per pound |
| $CaCO_3$ | calcium carbonate |
| CADD | computer aided design drafting |
| CERCLA | Comprehensive Environmental Response, Compensation, and Liability Act |
| CLEAN | Comprehensive Long-Term Environmental Action, Navy |
| cm/sec | centimeter(s) per second |
| Conc. | concentration |
| cST | centiStokes |
| °F | degrees Fahrenheit |
| °K | degrees Kelvin |
| dynes/cm | dynes per centimeter |
| ft/s | feet per second |
| FLOWPATH™ | a computer-based groundwater flow model |
| ft/day | feet per day |
| $ft^2$/day | square feet per day |
| g/s | gram(s) per second |
| GEP | good engineering practice |
| gpm | gallons per minute |
| HDPE | high density polyethylene |
| IR | Installation Restoration |
| J | estimated value |
| lb/hr | pound(s) per hour |
| LEL | lower explosion level |
| μg/kg | microgram(s) per kilogram |
| μg/ℓ | microgram(s) per liter |
| $\mu g/m^3$ | microgram(s) per cubic meter |
| mg/kg | milligram(s) per kilogram |
| mg/ℓ | milligram(s) per liter |
| mg/m | milligram(s) per meter |
| $mg/m^3$ | milligram(s) per cubic meter |

| | |
|---|---|
| m/s | meter per second |
| MCL | maximum contaminant level |
| MEK | methyl ethyl ketone |
| MK | Morrison Knudsen Corporation |
| MSDEQ | Mississippi Department of Environmental Quality |
| msl | mean sea level |
| NA | not available |
| NCBC | Naval Construction Battalion Center |
| ND | not detected |
| NEMA | National Electrical Manufacturers Association |
| OCDD | octachlorodibenzodioxin |
| OM&M | operation, maintenance, and monitoring (plan) |
| PA | Preliminary Assessment |
| pg/g | picogram(s) per gram |
| pg/ℓ | picogram(s) per liter |
| POTW | publicly owned treatment works |
| ppb | parts per billion |
| ppm | parts per million |
| PVC | polyvinyl chloride |
| RAC | response action contract |
| RI/FS | Remedial Investigation and the Feasibility Study |
| ROICC | Resident Officer in Charge of Construction |
| SARA | Superfund Amendments and Reauthorization Act |
| SI | Site Inspection |
| SOUTHNAV-FACENGCOM | Southern Division, Naval Facilities Engineering Command |
| SWMU | solid waste management unit |
| TPH | total petroleum hydrocarbons |
| TCDD | tetrachlorodibenzodioxin |
| TLV | threshold limit value |
| U | undetected above quantification limit |
| USEPA | U.S. Environmental Protection Agency |
| VOC | volatile organic compound |

# CHAPTER 1.0

# 1.0 INTRODUCTION

This document is the performance specification for the free-phase product recovery with associated groundwater treatment system to address removal of the free-phase product existing at Site 6, a former fire-fighting training area at the Naval Construction Battalion Center (NCBC) in Gulfport, Mississippi. The purpose of this performance specification is to identify the various conceptual components of the free-phase product recovery with associated groundwater treatment system, describe their purpose, discuss the pertinent application considerations, and provide information on performance requirements for the major components.

The objective of the system is to recover free-phase product to the extent practicable. Groundwater will be recovered and treated as well, but this is incidental to the primary purpose of the free-phase product recovery. Other contaminated media at Site 6 will be addressed in the future, as applicable.

The performance specification presents the free-phase product recovery with associated groundwater treatment system based on the data available from the Free-Phase Product Assessment Report (ABB Environmental Services, Inc. [ABB-ES], 1994) and the pumping test performed in January 1994 (ABB-ES, 1994). Investigation and analysis information is presented in the Free-Phase Product Assessment Report (ABB-ES, 1994) and is repeated here to the extent necessary to support the performance specifications.

The free-phase product recovery system will remove the free-phase product from the shallow aquifer using a trench with three collector wells equipped with total fluid pumps. The total fluid pumps will actively depress the groundwater, creating a static drawdown to facilitate the recovery of the free-phase product. The product and groundwater stream will be transferred to an oil and water separator where the product will be separated from the groundwater and transferred to a product storage tank for eventual disposal.

The groundwater will flow from the separator to the groundwater treatment system that will consist of a low-profile air stripper or diffused aeration tank. The treated water is proposed to be discharged to the publicly owned treatment works (POTW). Before discharge to the POTW, the treated water may be stored in two effluent tanks to allow controlled discharge flow according to POTW loads.

The primary elements of this document include the engineering analysis, site layout, trench and collector well design, piping and instrumentation diagrams, and performance specifications for all major system elements. All process flow, piping, and diagrams are included with the performance specifications in Appendix A to assist the response action contract (RAC) contractor in specifying their methods and materials of construction, and in identifying specific pieces of equipment to achieve the performance requirement described in this report. The RAC contractor will describe these details in their shop submittals (e.g., workplans and drawings) to the Navy.

CHAPTER 2.0

# 2.0 PERFORMANCE CRITERIA

The Free-Phase Product Assessment Report (ABB-ES, 1994) evaluated various treatment alternatives for the recovery and separation of product and the treatment of the associated groundwater. This chapter, Performance Criteria, introduces the performance, site conditions, and permitting requirements for the recommended alternative. Analyses of the general performance criteria are provided in the following chapter, Engineering Analyses.

**2.1 GENERAL PERFORMANCE CRITERIA**. The following criteria are summarized for the free-phase product recovery with associated groundwater treatment system.

- The free-phase product recovery system will use an interceptor trench filled with porous filter material and three collector wells to collect the free-phase product and associated groundwater.

- Each collector well will contain a single total fluids pump for extracting product and associated groundwater.

- Product will be separated from the collected stream in an oil and water separator and transferred to the product tank. Product disposal will be the responsibility of the RAC contractor.

- The groundwater collected as a result of creating the groundwater depression will be treated to remove volatile organic compounds (VOCs) in an air stripping system before discharge to the Harrison County POTW.

- Two effluent tanks may be used to store treated water as needed to allow a controlled flow stream to the POTW, based on POTW requirements. The need for these tanks will not be established until negotiations with the POTW are finalized. The effluent tanks and associated instrumentation are represented as "potential equipment" and "potential instrument(s)" in the performance specifications, but may or may not be needed in the final system.

- The area needed for the treatment system and two 20,000-gallon storage tanks is approximately 1,400 square feet.

**2.2 PERMITTING REQUIREMENTS**. The regulatory permitting requirements for the recovery and treatment system include:

- air permits to regulate the emissions from the air stripper,

- permits from the State and county to discharge to the Harrison County POTW, and

- base excavation permits to construct the trench.

However, Comprehensive Environmental Response, Compensation, and Liability Act (CERCLA) 42 USC9621(e) states that "No Federal, State, or local permit shall be required for the portion of any removal or remedial action conducted entirely

onsite, where such remedial action is selected and carried out in compliance with this section." Following this guidance:

- a construction or operating permit from the State of Mississippi Office of Pollution Control is not required, and

- a water discharge permit from the State of Mississippi Office of Pollution Control is not required.

2.2.1 Air The air permitting requirements for the groundwater treatment system may include the following two items: (1) a permit to construct a device that will emit to the atmosphere; and (2) modification to the base's current Clean Air Act, Title V, permit. The modification to the base's Title V permit will be executed by NCBC Gulfport.

Construction Permitting. A letter will be sent to the Air Permitting Chief at the Mississippi Office of Pollution Control that describes the site, remedial plans, and CERCLA 42 USC9621(e) and requests permission to construct a device that will emit to the atmosphere. The Air Permitting Chief will send notification of permitting requirements, if any, which must be met. Air permit requirements and associated regulations are provided in Appendix B.

This chapter contains information on expected air emissions and air quality impacts from the air stripping operation. The following presents the input assumptions and parameters and the results of the air modeling performed.

The U.S. Environmental Protection Agency (USEPA) SCREEN™ computer model (USEPA, 1988a) was used to predict air quality impacts for each chemical of concern. SCREEN™ uses a number of worst case meteorological conditions that will tend to overestimate air quality impacts. This model is recommended by the USEPA for conducting dispersion modeling for air pathway analyses and for estimating air quality impacts. Maximum predicted impacts were then compared with the American Conference of Governmental and Industrial Hygienists (ACGIH) threshold limit value (TLV) for each constituent to ensure public health would not be threatened during the system operation. Based on this analysis, it has been determined that air pollution control equipment is not needed for protection of public health.

The VOCs that are present in the groundwater at concentrations of concern are listed in Table 2-1. The VOCs will be removed from the groundwater using an air stripping technology before discharge of the water to a treatment works.

Eighteen chemicals have been identified in the groundwater that may be emitted into the air during the air stripping. Table 2-1 provides the estimated emission rates for each compound (Columns 2 and 3). Emission rates were calculated using the maximum groundwater concentration detected at any point in the constituent plume (Column 1) and assuming complete volatilization from the air stripper. Appendix B contains modeling results and calculations that support the modeling.

Preliminary design air flow through the air stripper is 600 cubic feet per minute for an air to water ratio of 180 to 1 at a water feed rate of 25 gallons per minute. The system will operate up to 24 hours per day, 7 days per week, for an estimated maximum of 5 years. Figure S-01 in the drawing section of Appendix A shows the approximate location of the equipment pad. Final design will establish the actual locations of the air stripper, stack, and nearby structures.

## Table 2-1
## Air Stripping Evaluation Worksheet

Performance Specification
Site 6, Fire-Fighting Training Area
Naval Construction Battalion Center Gulfport
Gulfport, Mississippi

| No. | Contaminant Name | Column 1 Maximum Groundwater Conc. (ppb) | Column 2 Maximum Emission Rate (lb/hr) | Column 3 Maximum Emission Rate (g/s) | Column 4 Maximum Air Emission Conc. at Point ($mg/m^3$) | Column 5 Maximum 8-hour Air Emission Conc. at Point ($mg/m^3$) | Column 6 TLV ($mg/m^3$) |
|---|---|---|---|---|---|---|---|
| 1 | Benzene | 83 | 0.00104 | 0.00013 | 0.00013 | 0.00009 | 3 |
| 2 | 2-Butanone (MEK) | 80 | 0.00100 | 0.00013 | 0.00013 | 0.00009 | 590 |
| 3 | Chloroethane | 310 | 0.00388 | 0.00049 | 0.00049 | 0.00035 | 2,640 |
| 4 | Chloroform | 20 | 0.00025 | 0.00003 | 0.00003 | 0.00002 | 49 |
| 5 | Chloromethane | 12 | 0.00015 | 0.00002 | 0.00002 | 0.00001 | NA |
| 6 | 1,1-Dichloroethane | 4,900 | 0.06133 | 0.00773 | 0.00781 | 0.00547 | 405 |
| 7 | 1,2-Dichloroethane | 1,200 | 0.01502 | 0.00189 | 0.00191 | 0.00134 | 40 |
| 8 | 1,1-Dichloroethylene | 3,100 | 0.03880 | 0.00489 | 0.00494 | 0.00346 | 20 |
| 9 | 1,2-Dichloroethene (total) | 170 | 0.00213 | 0.00027 | 0.00027 | 0.00019 | 790 |
| 10 | Ethylbenzene | 77 | 0.00096 | 0.00012 | 0.00012 | 0.00009 | 434 |
| 11 | Methylene chloride | 95 | 0.00119 | 0.00015 | 0.00015 | 0.00011 | 174 |
| 12 | 4-Methyl-2-pentanone | 100 | 0.00125 | 0.00016 | 0.00016 | 0.00011 | NA |
| 13 | Tetrachloroethene | 32 | 0.00040 | 0.00005 | 0.00005 | 0.00004 | 170 |
| 14 | Toluene | 340 | 0.00426 | 0.00054 | 0.00054 | 0.00038 | 188 |
| 15 | 1,1,1-Trichloroethane | 5,900 | 0.07385 | 0.00930 | 0.00941 | 0.00659 | 1,910 |
| 16 | Trichloroethene | 90 | 0.00113 | 0.00014 | 0.00014 | 0.00010 | 269 |
| 17 | Vinyl chloride | 35 | 0.00044 | 0.00006 | 0.00006 | 0.00004 | 13 |
| 18 | Xylene (total) | 490 | 0.00613 | 0.00077 | 0.00078 | 0.00055 | 434 |

Notes: Conc. = concentration.
ppb = parts per billion.
lb/hr = pound(s) per hour.
g/s = gram(s) per second.
$mg/m^3$ = milligrams per cubic meter.
TLV = threshold limit value.
MEK = methyl ethyl ketone.
NA = not available.

The point source algorithm in the computer modeling program SCREEN™ (USEPA, 1988a) was used in the analysis. Flat terrain and rural dispersion were assumed. Concentrations were calculated for the full range of meteorological conditions available in the model. Automated receptor distances from 1 meter to 1,000 kilometers were selected for a single wind direction. Using the automated distance array option, SCREEN™ (USEPA, 1988a) calculates the maximum ground level concentration that will occur during operation of the system across the range of meteorological conditions using an iteration routine to determine the maximum value and associated distance to the nearest meter. Because stack gas temperature is expected to be close to ambient temperature, the default ambient temperature assumed by the model, 293 degrees Kelvin (°K), was also used as the stack gas temperature. The stack gas velocity is based on current estimated blower capacity (600 cubic feet per minute) and stack diameter (8 inches). To reduce the number of model runs and for ease of calculating air quality impacts for each of the chemicals, the model used an unit emission rate of 1 gram per second (g/s).

The air emission rates (Column 3) and modeled maximum air emission ground level concentrations (Column 4) for each chemical of concern are provided in Table 2-1. Appendix B presents the SCREEN™ model (USEPA, 1988a) documentation for calculating the maximum ground level concentrations. Stack parameters used as input to the model are shown in Table 2-2. The stack would be located in a rural area.

**Table 2-2**
**Stack Parameters**

Performance Specification
Site 6, Fire-Fighting Training Area
Naval Construction Battalion Center Gulfport
Gulfport, Mississippi

| Source Type | Point | English Equivalent |
|---|---|---|
| Emission rate | 1 g/s | (8 lb/hr) |
| Stack height | 7.92 meters | (26 feet) |
| Stack inside diameter | 0.2 meters | (8 inches) |
| Stack exit velocity | 9.02 m/s | (29.6 ft/s) |
| Stack gas exit temperature | 293 °K | (68 °F) |
| Ambient air temperature | 293 °K | (68 °F) |
| Receptor height | 0 meter | 0 foot |
| Nearby structure height | 4.27 meters | (14 feet) |
| Minimum horizon dimension | 2.44 meters | (8 feet) |
| Maximum horizon dimension | 10.36 meters | (34 feet) |

Notes: g/s = grams per second.
lb/hr = pound(s) per hour.
m/s = meter per second.
ft/s = feet per second.
°K = degrees Kelvin.
°F = degrees Fahrenheit.

Dimensions of the low profile air stripper used for this analysis were 74 inches long by 60 inches wide by 80 inches high. The unit on a skid, not including the stack, was assumed to reach a height of 87 inches. Due to the size and height of the stack, the low profile air stripper is not expected to affect dispersion

of air emissions. The tallest structures near the stack are the optional effluent tanks (estimated 14 feet high, 8 feet wide, and 34 feet long). The stack height of 26 feet follows good engineering practice (GEP) for stack heights, defined by USEPA as the height of a nearby structure plus 1.5 times the lesser of the height or width of the nearby structure. Because the stack height is equivalent to the GEP stack height, building downwash is not expected to occur.

Table 2-1, Column 4, represents the maximum 1-hour concentrations that could occur at ground elevation during various dispersion situations. Column 5 represents the maximum concentrations for an 8-hour averaging time. The maximum predicted 1-hour concentration for a 1 g/s emission rate was 1,870 micrograms per cubic meter ($\mu g/m^3$) (Appendix B, Pages 2 and 3). The maximum impact for a 1 g/s emission rate occurred at 43 meters from the stack base for F stability (six classes of wind stabilities are defined and used by the SCREEN™ model [USEPA, 1988a]) and a 2 meter per second wind speed. Using a factor of 0.7 to convert this 1-hour impact to an 8-hour concentration, the maximum 8-hour impact for a 1 g/s emission rate is 1,309 $\mu g/m^3$. The USEPA recommends this 0.7 factor be applied to 1-hour results from the SCREEN™ model (USEPA, 1988a) to estimate 8-hour impacts. The 8-hour concentrations were then compared to TLV recommendations by ACGIH (see Table 2-1, Column 6), which are 8-hour maximum recommended exposure values for each constituent.

As indicated on Table 2-1, the maximum ground level concentrations calculated by the SCREEN™ model (USEPA, 1988a) are well below the TLVs. The analysis reaffirms that air emissions will result in a negligible impact on air quality during the system operation.

**2.2.2 Publicly Owned Treatment Works (POTW)** The free-phase product recovery with associated groundwater treatment system will discharge treated groundwater from the site to the base sewer system. The base sewer system discharges to the City of Gulfport sewer system, which discharges to the Harrison County POTW. Approval to discharge the treated water must be obtained from the City of Gulfport and from the Harrison County POTW.

POTW, State of Mississippi Department of Environmental Quality, Office of Pollution Control. ABB-ES will send a letter to the Office of Pollution Control that describes the site and the remedial plans to discharge treated groundwater from the site to the Harrison County POTW. The Office of Pollution Control may set permitting requirements and/or site-specific discharge limitations and sampling requirements that must be met.

POTW, City of Gulfport. ABB-ES will send a letter to the City of Gulfport that describes the site and the remedial plans and requests approval to discharge treated groundwater from the site to the City of Gulfport sewer system.

POTW, Harrison County Waste Water and Solid Waste Management District. CERCLA does not require a POTW facility to accept site discharges; however, ABB-ES will submit an industrial and commercial sewage disposal application to the Harrison County POTW. A copy of the industrial and commercial sewage disposal application is provided in Appendix C along with contact names and telephone numbers.

The Harrison County Wastewater and Solid Waste Management District will set discharge and pretreatment requirements for the effluent from the groundwater treatment system after they receive the permit application. It is unlikely that

the effluent criteria set by the POTW will exceed the requirements of the performance specification. However, in the event that the performance specifications do not meet the acceptance criteria of the city and county, the RAC contractor will need to modify the design to achieve the effluent criteria. The POTW is currently operating at or above design capacity and negotiations for discharge from the treatment system during non-peak hours may be necessary. Optional storage tanks have been included in the recovery and treatment system design so that, if necessary, discharge to the POTW could be scheduled during non-peak times.

2.2.3 Excavation An excavation permit must be obtained from the base prior to any digging, drilling, or trenching at Site 6. Specific trenching, drilling, and digging locations need to be provided by the RAC contractor to the NCBC Public Works Department to obtain the necessary utility clearances. The permit is valid for 90 days from the date of issue. If the work extends for more than 90 days, the permit will need to be extended or reissued. A copy of an excavation permit is provided in Appendix D along with contact names and phone numbers.

2.3 CONSTRUCTION. Potential construction issues for the recovery and treatment system installation that should be addressed prior to the actual construction of the system are:

- utility locations and access,
- construction dewatering requirements,
- monitoring and recovery well locations, and
- site access and constructability.

The site layout, Figure S-01 in Appendix A, illustrates the proposed trench and conveyance trench locations in relation to the utilities, existing wells, proposed piezometers, treatment pad, and effluent tank locations. The RAC contractor will be responsible for confirming utility locations prior to subsurface construction.

2.3.1 Utility Locations and Access There are two water pipe lines at Site 6. One line runs north to south along Colby Avenue and should not interfere with construction, but the pipeline's location should be verified prior to installing the trench and conveyance trench systems. The second pipe line is an active 6-inch line that extends perpendicular from the north to south line to a fire hydrant at the northeast corner of Building 391 and Simms Avenue. This pipeline is approximately 10 feet from Building 391 and is located approximately 3 feet underground. This pipe line could potentially be in the way of trenching activities. The pipe line should also be considered when placing and constructing the treatment pad. It is preferable that the treatment pad not be located above the water line.

Power and sewer lines are located near the corner of Building 391 and Simms Avenue. A sewer manhole is located between the northeast corner of Building 391 and Simms Avenue. A power pole supplying both single- and three-phase power is located across the street. The proposed treatment pad location is near the northeast corner of Building 391 for easy access to these utilities.

2.3.2 Construction Dewatering Considerations If conventional trench excavation and material placement methods are used, dewatering may be required to install the recovery trench. If dewatering is required, the resulting free-phase product

and groundwater will need to be collected, properly handled, and disposed. An *in situ* recovery trench installation technique is preferred, to avoid construction dewatering requirements. Choice of method will be determined by the RAC contractor, subject to Navy review and approval.

2.3.3 Monitoring and Recovery Well Locations Eight monitoring wells, one recovery well with aboveground protective casings and posts, and two well points are currently located at Site 6. Some of these wells could potentially cause complications during construction. For future monitoring and remedial concerns, it is preferable that none of these wells or well points be abandoned. However, the recovery well, GPT-6-RW, is located close to the proposed location of the recovery trench. The trench location is approximate and its placement may be adjusted to avoid the existing recovery well. However, if necessary, the recovery well may be converted to a surface-flush installation or abandoned at the discretion of the RAC contractor.

2.3.4 Site Access and Constructability Site 6 covers only approximately 27,000 square feet and large equipment may have difficulties maneuvering in this small area. The proposed piezometers that will be used for monitoring should be installed after the recovery and conveyance trenches are installed. In addition to the existing buildings and wells, a field of wooden power poles is located on the site. These poles were used to train electricians; however, they are no longer used. Additionally, cables extend from Building 390 to the ground. Removal of these poles and cables may be necessary prior to construction activities. The RAC contractor will coordinate removal of the poles with base personnel and the Resident Officer in Charge of Construction (ROICC).

# 3.0 ENGINEERING ANALYSES

The engineering analyses are provided for the following:

- capture zone (product recovery) modeling,
- recovery trench,
- product separation and groundwater treatment system,
- water discharge,
- additional wells,
- materials of construction, and
- residual disposal.

The analyses identify the various conceptual components of the free-phase product recovery with associated groundwater treatment system and describes their purpose and relevant application considerations.

**3.1 PERFORMANCE PARAMETERS**. The performance and operation of the system are dependent upon site-specific aquifer and analytical characteristics. These parameters were investigated during the Free-Phase Product Assessment (ABB-ES, 1994). The field investigations and data evaluation are presented in the Free-Phase Product Assessment Report (ABB-ES, 1994). Tables 3-1 through 3-4 summarize the findings that have been considered during the engineering analysis and that may affect the operation of the free-phase product recovery and groundwater treatment system. Groundwater concentrations are the maximum observed in shallow monitoring wells and are considered representative of groundwater associated with floating product.

**3.2 PRODUCT RECOVERY MODELING**. A computer-based groundwater flow model was used as a predictive tool for capture zone analysis of the free-phase product extraction system for Site 6 at NCBC Gulfport. This model, FLOWPATH™ (Franz and Guiguer, 1989), uses a finite difference method to solve the groundwater flow equation for two-dimensional, steady-state flow through a heterogeneous, saturated, anisotropic, porous media. FLOWPATH™ allows the user to subdivide the aquifer into a rectangular grid of blocks that are a user-defined length, width, and depth. The results from the groundwater flow equation provide a fluid mass balance for each of the blocks. This two-dimensional formula does not include any vertical gradients of hydraulic heads and velocities.

A rectangular grid was superimposed over a computer aided design drafting (CADD) drawing of Site 6 forming 13 by 17 grid cells. The dimensions of each of these cells was set at 20-foot-long (parallel to the general flow direction) by 20-foot-wide (normal to the general flow direction). These cells were further subdivided in the central and downgradient area of the free-phase product plume to provide better resolution of hydraulic heads and flow characteristics of the modeled extraction system. The intersections of the grids form 22 nodes along the **x**-axis (east to west direction) and 27 nodes along the **y**-axis (north to south direction). The resulting grid cells (or blocks), therefore, ranged from 5- to 20-foot-long and from 10- to 20-foot-wide (Figure 3-1).

FLOWPATH™ uses a block-centered finite difference scheme so that aquifer properties for this unconfined aquifer were defined for each block. This feature

## Table 3-1
## Aquifer Test Parameters

Performance Specification
Site 6, Fire-Fighting Training Area
Naval Construction Battalion Center Gulfport
Gulfport, Mississippi

| Well Identification | Screened Interval (feet bls) | Material Description | Transmissivity ($ft^2$/day) | Hydraulic Conductivity (cm/sec) |
|---|---|---|---|---|
| **Slug Test Analysis** | | | | |
| GPT-6-2 | 3.0 to 22.0 | Sand | | $1.0 \times 10^{-3}$ |
| GPT-6-3 | 3.0 to 22.0 | Sand | | $3.1 \times 10^{-3}$ |
| GPT-6-4[1] | 3.2 to 13.2 | Fine- to medium-grained sand | | $2.0 \times 10^{-4}$ |
| GPT-6-5 | 26.6 to 31.6 | Medium-grained sand with some fines | | $5.2 \times 10^{-3}$<br>$5.6 \times 10^{-3}$ |
| GPT-6-6[1] | 3.2 to 13.2 | Fine-grained sand with some silt | | $2.2 \times 10^{-3}$<br>$2.1 \times 10^{-3}$ |
| GPT-6-7 | 39.4 to 44.4 | Medium-grained sand with some fines | | $2.2 \times 10^{-3}$<br>$3.5 \times 10^{-3}$ |
| GPT-6-8[1] | 4.2 to 14.2 | Silty sand | | $2.1 \times 10^{-3}$<br>$2.0 \times 10^{-3}$ |
| **Pumping Test Analysis** | | | | |
| **Cooper-Jacob Strait-line Method Time-Drawdown Solution** | | | | |
| GPT-6-1[1] | 3.0 to 27.5 | Silty sand | 978.7 | $1.3 \times 10^{-2}$ |
| GPT-6-4[1] | 3.2 to 13.2 | Fine- to medium-grained sand | 2,142.2 | $7.6 \times 10^{-2}$ |
| **Distance Drawdown Solution** | | | | |
| All monitoring wells | | | 194 | $2.5 \times 10^{-3}$ |
| | | | 166 | $2.2 \times 10^{-3}$ |

[1] Monitoring well with free-phase product.

Note: bls = below land surface.
$ft^2$/day = square feet per day.
cm/sec = centimeter per second.

## Table 3-2
## Subsurface Soil Parameters

Performance Specification
Site 6, Fire-Fighting Training Area
Naval Construction Battalion Center Gulfport
Gulfport, Mississippi

| Analyte | Maximum Concentration |
|---|---|
| **Volatile Organic Compounds (µg/kg)** | |
| Carbon disulfide | 2 J |
| 1,1-Dichloroethene | 17 J |
| 1,1-Dichloroethane | 38 J |
| 1,2-Dichloroethene (total) | 23 J |
| 1,2-Dichloroethane | 70 J |
| 2-Butanone | 10 J |
| 1,1,1-Trichloroethane | 27 J |
| Trichloroethylene | 39 J |
| Benzene | 170 J |
| Tetrachloroethylene | 980 J |
| Toluene | 5,200 J |
| Ethylbenzene | 2,700 J |
| Xylene (total) | 19,000 J |
| **Semivolatile Organic Compounds (µg/kg)** | |
| 4-Methylphenol | 3,700 U |
| Naphthalene | 4,800 |
| 2-Methylnaphthalene | 28,000 |
| Acenaphthene | 720 J |
| Fluorene | 4,400 |
| Phenanthrene | 2,100 J |
| Anthracene | 7,600 |
| bis(s-Ethylhexyl)phthalate | 59 J |
| Pyrene | 1,400 J |
| **Pesticides (µg/kg)** | ND |
| **Herbicides (µg/kg)** | ND |
| **Total Organic Carbon (mg/kg)** | ND |
| **Total Petroleum Hydrocarbons (mg/kg)** | 88,000 |
| **Dioxins and Furans (pg/g)** | |
| Octachlorodibenzodioxin | 152 J |
| **Inorganic Compounds (mg/kg)** | |
| Aluminum | 8,610 |
| Arsenic | 1.5 J |
| Barium | 32.0 J |
| Chromium | 8.4 |
| Cobalt | 1.2 J |
| Iron | 3,040 |

See notes at end of table.

## Table 3-2 (Continued)
## Subsurface Soil Parameters

Performance Specification
Site 6, Fire-Fighting Training Area
Naval Construction Battalion Center Gulfport
Gulfport, Mississippi

| Analyte | Maximum Concentration |
|---|---|
| **Inorganic Compounds (mg/kg) (continued)** | |
| Lead | 90.2 |
| Mercury | 0.07 |
| Nickel | 5.2 J |
| Potassium | 272 J |
| Selenium | 5.1 |
| Vanadium | 10.5 J |
| Zinc | 17.7 |
| **Grain size samples obtained from 8 feet bls and 15 feet bls** | **Physical Characteristics:**<br>1 percent fine-grained gravel<br>1 percent coarse-grained sand<br>21 to 24 percent medium-grained sand<br>62 percent fine-grained sand<br>13 to 15 percent fine-grained silt and clay |

Notes: μg/kg = micrograms per kilogram.
J = estimated value.
U = undetected above quantification limit.
ND = not detected.
mg/kg = milligrams per kilogram.
pg/g = picograms per gram.
bls = below land surface.

## Table 3-3
## Groundwater Parameters

Performance Specification
Site 6, Fire-Fighting Training Area
Naval Construction Battalion Center Gulfport
Gulfport, Mississippi

| Analyte | Maximum Concentration | MCL |
|---|---|---|
| **Physical Properties (mg/ℓ)** | | |
| Alkalinity as $CaCO_3$ | 17 | NA |
| Color | 0.0 | NA |
| Hardness as $CaCO_3$ | 44 | NA |
| Total dissolved solids | 78 | NA |
| Total suspended solids | <1.0 | NA |
| Chloride | 9.9 | NA |
| Sulfate | 14 | NA |
| Biological oxygen demand ($BOD_5$) | 13 | NA |
| Chemical oxygen demand | 36 | NA |
| **Volatile Organic Compounds (μg/ℓ)** | | |
| Chloromethane | 12 J | NA |
| Vinyl chloride | 35 J | 2 |
| Chloroethane | 310 J | NA |
| Methylene chloride | 95 J | 5 |
| Carbon disulfide | 4 J | NA |
| 1,1-Dichloroethene | 3,100 | 7 |
| 1,1-Dichloroethane | 4,900 | NA |
| 1,2-Dichloroethene (total) | 170 | 70-cis<br>100-trans |
| Chloroform | 20 J | 100 |
| 1,2-Dichloroethane | 1,200 | 5 |
| 2-Butanone | 80 J | NA |
| 1,1,1-Trichloroethane | 5,900 | 200 |
| Trichloroethene | 90 | 5 |
| Benzene | 83 J | 5 |
| 4-Methyl-2-pentanone | 100 J | NA |
| Tetrachloroethene | 32 J | 5 |
| Toluene | 340 J | 1,000 |
| Ethylbenzene | 77 J | 700 |
| Xylene (total) | 490 J | 10,000 |
| **Semivolatile Organic Compounds (μg/ℓ)** | | |
| Phenol | 48 J | NA |
| 2-Methylphenol | 380 J | NA |
| 4-Methylphenol | 1,100 J | NA |
| 2,4-Dimethylphenol | 56 J | NA |
| Naphthalene | 250 | NA |

See notes at end of table.

## Table 3-3 (continued)
## Groundwater Parameters

Performance Specification
Site 6, Fire-Fighting Training Area
Naval Construction Battalion Center Gulfport
Gulfport, Mississippi

| Analyte | Maximum Concentration | | MCL |
|---|---|---|---|
| 2-Methylnaphthalene | 770 J | | NA |
| Acenaphthene | 48 J | | NA |
| Fluorene | 23 J | | NA |
| Phenanthrene | 350 J | | NA |
| **Herbicides (μg/ℓ)** | ND | | NA |
| **Pesticides (μg/ℓ)** | | | |
| alpha-Chlordane | 0.14 J | | NA |
| **Total Organic Carbon (μg/ℓ)** | 302,000 | | NA |
| **Total Petroleum Hydrocarbons** | 295,000 | | NA |
| **Dioxins (pg/ℓ)** | | | |
| OCDD | [1]15 | | [2]30 |
| **Inorganics (μg/ℓ)** | **Unfiltered** | **Filtered[3]** | |
| Aluminum | 194,000 | 203 | NA |
| Arsenic | 23.9 | 6.0 | 50 |
| Barium | 771 | 259 | 2,000 |
| Beryllium | 1.7 J | <1.0 | 4 |
| Cadmium | 5.4 | <1.0 | 5 |
| Calcium | 145,000 | 127,000 | NA |
| Chromium | 238 | <3.0 | 100 |
| Cobalt | 18.5 J | 7.6 | NA |
| Copper | 79.8 | <3.0 | 20 |
| Iron | 34,100 | 11,200 | NA |
| Lead | 533 | 1.5 | 15 |
| Magnesium | 11,200 | 10,300 | NA |
| Manganese | 903 | 718 | NA |
| Mercury | 1.4 | <0.20 | 2 |
| Nickel | 46.5 | <13.0 | 100 |
| Potassium | 6,130 | 4,690 | NA |
| Selenium | 36.0 J | 21.7 | 50 |
| Vanadium | 108 | 2.7 | NA |
| Zinc | 247 | 62.3 | NA |
| Cyanide | 3.8 J | NA | 200 |

See notes at end of table.

## Table 3-3 (continued)
## Groundwater Parameters

Performance Specification
Site 6, Fire-Fighting Training Area
Naval Construction Battalion Center Gulfport
Gulfport, Mississippi

[1] Using the toxicity equivalent factor for the concentration of 15,000 picograms per liter (pg/ℓ) for octachlorodibenzodioxin (OCDD), tetrachlorodibenzodioxin (TCDD) is equivalent to 15 pg/ℓ.

[2] Maximum contaminant level for TCDD.

[3] 0.45 micron filter.

Notes: MCL = maximum contaminant level.
mg/ℓ = milligram(s) per liter.
$CaCO_3$ = calcium carbonate.
NA = not available.
$BOD_5$ = biological oxygen demand, 5-day.
μg/ℓ = microgram(s) per liter.
J = estimated value.
pg/ℓ = picogram(s) per liter.
OCDD = octachlorodibenzodioxin.
TCDD = tetrachlorodibenzodioxin.

## Table 3-4
## Free-Phase Product Parameters

Performance Specification
Site 6, Fire-Fighting Training Area
Naval Construction Battalion Center
Gulfport, Mississippi

| Analyte | Maximum Value |
|---|---|
| **Fingerprint Hydrocarbon** | 55 to 60 percent diesel<br>40 percent heavier hydrocarbons<br><10 percent gasoline |
| **Dioxins and Furans (pg/ℓ)** | |
| Octachlorodibenzodioxin | 235 |
| **Viscosity at 59 °F (cST)** | 29.6 |
| **Surface Tension at Room Temperature (dynes/cm)** | 30 |
| **Interfacial Tension at Room Temperature** | 26 |
| **American Petroleum Institute Gravity** | 30.4 |
| **Specific Gravity 60/60 °F** | 0.8740 |
| **Heat of Combustion (BTU/lb)** | 19,533 |

Notes: pg/ℓ = picograms per liter.
°F = degrees Fahrenheit.
cST = centiStokes.
dynes/cm = dynes per centimeter.
BTU/lb = British thermal unit per pound.

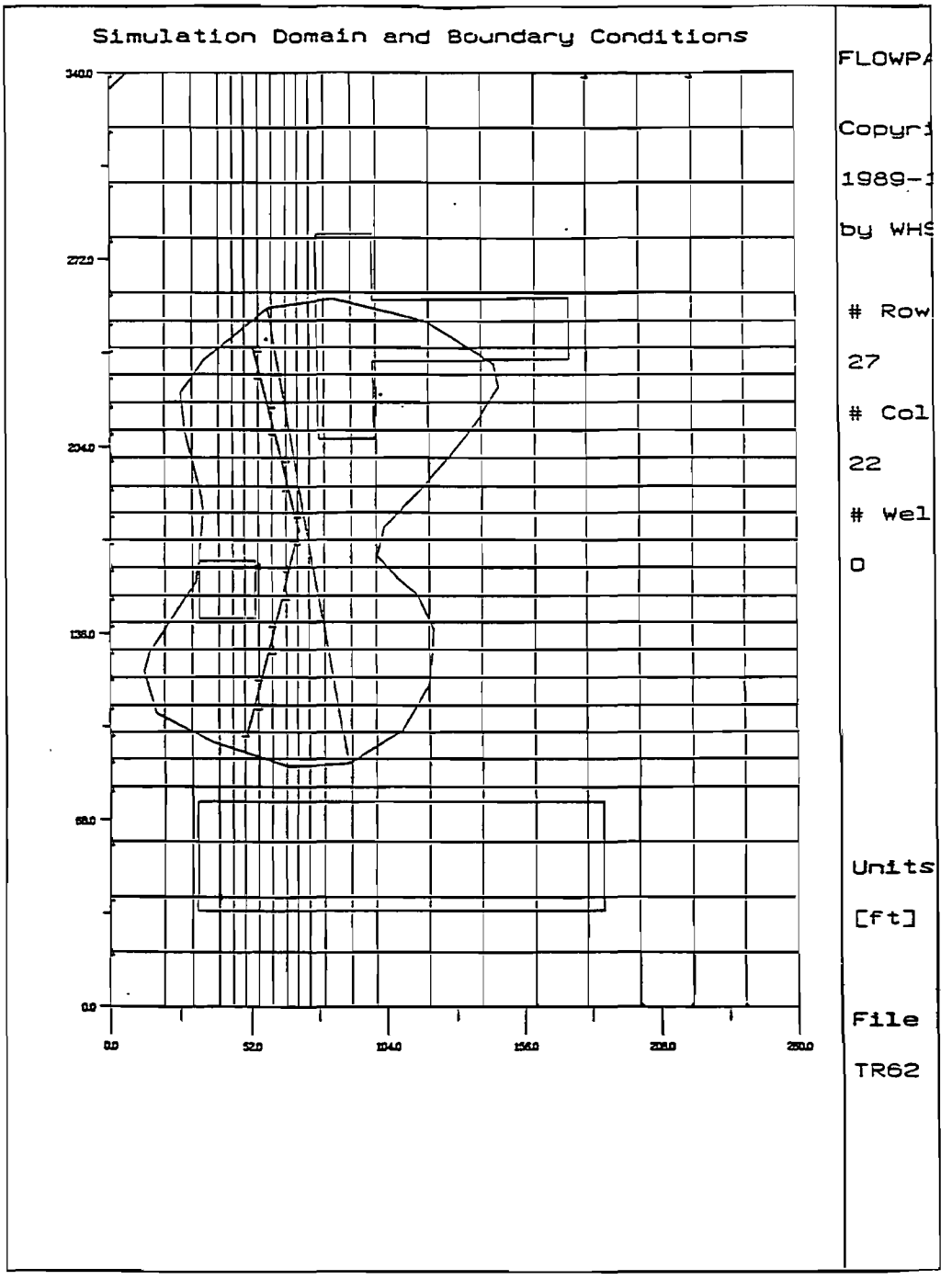


FIGURE 3-1

FLOWPATH™ GRID

PERFORMANCE SPECIFICATION, SITE 6, FIRE-FIGHTING TRAINING AREA

NAVAL CONSTRUCTION BATTALION CENTER
GULFPORT, MISSISSIPPI

D:\DWG\ABB\8505-70\PER-SPEC\FIG_3-1\MLV\940824

allows the user to define variations of these aquifer parameters to account for the heterogeneous and anisotropic nature of the aquifer for specific blocks or series of blocks.

Based on site-specific data collected during the Free-Phase Product Assessment, hydraulic heads, hydraulic conductivity, effective porosity, bottom of the aquifer, and recharge (infiltration minus evaporation) were set for the shallow aquifer at Site 6. Model input and specific information pertaining to the FLOWPATH™ model iterations are summarized in Table 3-5.

**Table 3-5**
**Modeling Assumptions and Input Parameters for FLOWPATH™ Model**

Performance Specification
Site 6, Fire-Fighting Training Area
Naval Construction Battalion Center Gulfport
Gulfport, Mississippi

| Parameter | Area Specific Values[1] | Design Values |
|---|---|---|
| **Hydraulic Conductivity (ft/day)** | | |
| Aquifer matrix | 0.57 | 5.7 |
| | 2.8 | |
| Trench | 25.5 | |
| | 227 | |
| **Effective Porosity** | | |
| Aquifer matrix | 0.22 | 0.25 |
| | 0.25 | |
| Trench fill | 0.27 | |
| | 0.33 | |
| **Constant Heads (feet msl)** | | 20.4 |
| West | | 23.3 |
| Southeast | | 24.4 |
| Trench | 21.9 | |
| **Bottom of Aquifer (feet msl)** | | -5.0 |
| South boundary (southeast to west in a northwest orientation) | -6.0 to -15.0 | |
| Below partially penetrating trench | | 13.0 |
| **Recharge (ft/day)** | | |
| Infiltration | | 0.011 |
| - paved areas & buildings | | 0 |
| - ditch | 0.01256 | |
| Evaporation | | 0.0091 |
| - paved areas & buildings | | 0 |

[1] Area-specific values are provided for each block or series of blocks in Appendix E.

Notes: ft/day = feet per day.
msl = mean sea level.

FLOWPATH™ model runs were generated for the following three basic groundwater flow scenarios: (1) groundwater flow under natural conditions without any pumping, (2) extraction of fluids from the aquifer using an interceptor trench, and (3) extraction of fluids from the aquifer using a series of well points. Results of

these three scenarios as well as specific information pertaining to the FLOWPATH™ model iterations are included in Appendix E.

The first scenario was produced to simulate static groundwater conditions at Site 6. The second and third scenarios were generated to compare the performance of product recovery using an interceptor trench and a series of well points. Comparative results indicate the interceptor trench captures the product plume more completely than the well point scenario. Additionally, the well point scenarios resulted in steep cones of depression around each well point that could possibly trap product in the saturated zone.

The trench was agreed upon by Morrison Knudsen Corporation (MK), the RAC contractor; Southern Division, Naval Facilities Engineering Command (SOUTHNAVFACENGCOM); and ABB-ES as the most appropriate technology to use at Site 6 for remediation of the free-phase product plume. The performance specifications of the trench are presented in the following section.

3.3 RECOVERY TRENCH PARAMETERS. The objective of the recovery trench is to recover the free-phase product by actively depressing the groundwater through pumping, which in turn will facilitate product flow towards the recovery trench and eventual recovery of the product.

Hydrogeologic modeling has determined that an active recovery trench, 150 feet long by approximately 1.5 to 3.0 feet wide with a depth of approximately 21 feet below land surface (bls), will provide optimum recovery conditions. The collection well system within the recovery trench will provide a means to extract fluids at a pumping rate of 7.0 to 25.0 gallons per minute (gpm), while maintaining a drawdown ranging from 1.5 to 5.0 feet, with 3 feet of drawdown being optimum. With this recovery rate, the recovery system may be in operation for up to 5 years. The recovery trench will be constructed in a chevron configuration and will be positioned within the downgradient side of the product plume. The site layout showing the trench is shown on Figure S-01 in the drawing section of Appendix A.

Three vertical collector wells are installed in the recovery trench with one at the center and the others each 60 feet down either leg of the configuration. The collector well material is Schedule 10S, type 304 stainless-steel, flush joint-threaded well casing with wire wrap, 0.020-inch continuous slot well screen. The vertical wells will be 4 to 6 inches in diameter, slotted from 5 to 15 feet bls, with a 5-foot sump at the bottom. The collector well configuration is shown on Figures D-01 and D-02 in the drawing section of Appendix A.

The recovery trench will be backfilled with a granular filter material up to 2.0 feet bls. Specifications for the granular filter materials are shown in Table 3-6. The granular filter material will be installed and compacted by saturating with clean water up to 2 feet bls. The granular filter material should be installed so that not more than 5 percent of the *in-situ* material mixes with the granular filter.

A lateral diffusion pipe will be installed along the top of the granular filter material running horizontally the total length of the trench between each of the well vaults, as shown in Figure D-01 in Appendix A. The pipe will be 1.5-inch-diameter polyvinyl chloride (PVC) with continuous 0.020-inch slots. The lateral

diffusion pipe will be sleeved into the recovery trench vaults as shown in Figure D-03 in the drawing section of Appendix A. Once the pipe is installed, the trench will be backfilled and moisture compacted to 1 foot bls with the granular filter material. The function of this pipe is to provide a means to diffuse or inject trench rehabilitation and/or treatment fluids into the granular filter material. The pipe will be used initially to develop the recovery trench and later for preventive maintenance to minimize potential fouling conditions. If fouling of the filter material occurs during operation, this maintenance pipe provides an entry way for flushing and/or chemical addition.

**Table 3-6**
**Granular Filter Pack Material Specifications, Recovery Trench**

Performance Specification
Site 6, Fire-Fighting Training Area
Naval Construction Battalion Center Gulfport
Gulfport, Mississippi

| D-Size Finer | Size Range (millimeter) |
|---|---|
| $D_0$ | 0.20 to 0.70 |
| $D_{10}$ | 0.45 to 1.50 |
| $D_{30}$ | 0.90 to 2.90 |
| $D_{50}$ | 1.05 to 3.50 |
| $D_{60}$ | 1.13 to 3.75 |
| $D_{70}$ | 1.25 to 4.00 |
| $D_{90}$ | 2.00 to 6.30 |
| $D_{100}$ | 3.50 to 9.53 |

Notes: Range provides for 16 percent to 86 percent medium-grained sand.

Granular filter pack material should fall between these specified ranges and follow the succeeding characteristics:
- clean,
- well-rounded grains,
- 90 to 95 percent quartz grains, and
- coefficient of uniformity of 2.5 or less.

A high density polyethylene (HDPE) liner 20-mils thick will be installed covering the granular filter material at 1 foot bls for the full length of the trench. This will limit surface recharge into the trench. A 1-foot overlap is required for any seam in the liner installation. The liner will be fastened to the side of the recovery vault a minimum of 6 inches, as shown on Figure D-03. The recovery trench will be completed by backfilling and compacting back to existing conditions with the native soil.

A total fluids pump will be installed in each of the vertical collection wells for groundwater depression and product collection with the following specifications:

- positive displacement type pump,
- top filling configuration,
- means to maintain constant static water level drawdown,
- capacity for continuous flow rates between 2 and 10 gpm, and

- means to overcome a minimum total system head of 35 feet.

The combined stream from the pumps may range from 7 gpm to a design maximum of 25 gpm. Flow rate will vary depending on groundwater level (elevations) fluctuation caused by seasonal changes and rainfall events and product recovery efficiencies. The pump flow rates will be varied to maximize product recovery by creating 1.5 to 5 feet of drawdown to minimize associated groundwater removal.

Each of the vertical wells are enclosed in vaults, as shown in Figure D-03 in Appendix A, with the following specifications:

- minimum of 3 feet by 3 feet by 2.5 feet deep (inside dimensions);
- precast concrete walls and floor;
- steel, water tight, lockable, split-lid cover, capable of withstanding American Association of State Highway and Transportation Officials (AASHTO) H20 loading; and
- cable and winch assembly with galvanized or stainless-steel cable (300 pound breaking strength) for adjusting pumps.

All of the pipes and conduit will run independently to the treatment system where they will be manifolded into the system. Construction considerations for piping material are defined in Section 3.6. The conveyance piping and any associated conduit will run to the treatment system in conveyance trenches. The conveyance trench details are shown on Figure D-04 in the drawing section of Appendix A. The piping layout is shown on the site layout on Figure S-01 in Appendix A.

**3.4 SYSTEM PARAMETERS**. This section provides a description of the product recovery with associated groundwater treatment system. Performance specifications for individual system components are provided in Appendix A.

**3.4.1 Oil and Water Separator** Product and associated groundwater collected in the trench will be transferred by the total fluids pumps in the collector wells to the oil and water separator. The separator will be equipped with a coalescing media to aid in product separation and a sludge compartment to aid in sludge removal. An adjustable effluent weir will assist in maximizing efficient product recovery and reducing entrainment of oil droplets in the effluent water stream. The separator will be sized to achieve a maximum of 10 parts per million (ppm) oil and grease in the effluent stream.

The product level in the oil compartment of the oil and water separator will be maintained by a level switch that will start and/or stop the product transfer pump that will transfer product to the product tank. The product transfer pump will be a positive displacement pump to handle viscosity variations in the recovered product.

The product tank will be equipped with a high level switch that will activate the system alarm strobe when a high level situation occurs within the tank. A high-high level switch will activate the alarm strobe and will shut off the product transfer pump. The alarm strobe can be acknowledged by the base personnel responsible for product disposal operations. If necessary, water can be drained

from the product tank before transportation to an approved recycling center. The separated water can be recycled through the water treatment system.

The water from the oil and water separator will flow by gravity to the air stripper.

3.4.2 Air Stripper Volatilization of the VOCs in the groundwater is achieved in the air stripper. The air stripper may be a low profile tray tower or a diffused aeration tank at the discretion of the RAC contractor. Diffused aeration tanks typically do not achieve high removal efficiencies, but do allow for gravity flow from the oil and water separator. Gravity flow to a low profile tray tower may require raising the oil and water separator to an elevation above the trays. Low profile air strippers and diffused aeration units are constructed with separate stages, each stage adding additional removal efficiency to the overall unit. Air is released into each stage of the unit from a blower. The groundwater will pass through each stage while air is forced through the water to promote mass transfer of organics from aqueous to gaseous phase. Exhaust air will exit the unit through a stack to the atmosphere. The stack will be equipped with a pitot tube to monitor air flow through the stack. A sample tap also will be available to collect vapor samples for monitoring stack emissions.

From the last stage of the air stripper, the water may be allowed to flow directly to the POTW, depending on the permit requirements for discharge to the POTW. If flow to the POTW is allowed only during non-peak hours, then a sump and transfer pump that will transfer water to the effluent tanks for temporary storage prior to discharge will be necessary.

If effluent tanks are necessary, the air stripper should be equipped with a sump as an integral part of the air stripper unit. The sump will be equipped with a high and low level switch that will start or stop the air stripper transfer pump. High pressure in the pump discharge will also shut off the transfer pump and activate the alarm strobe, indicating a process alarm condition. This will protect the pump if the discharge line becomes blocked for any reason. A high-high level switch in the air stripper sump will shut off the collector well pumps. The collector well pumps will restart with deactivation of the high-high level switch.

The blower will be equipped with a high pressure switch to shut off the blower and to activate the alarm strobe in the case of a high pressure situation that will cause low air flow. High pressure could be caused by plugging of air holes in the trays or plugging of air diffuser piping.

The air stripper effluent line will have a tee-connection with a quick connect fitting for a flexible hose in case the treated effluent needs to be recycled through the process. This recycle step may be used during start-up procedures or system test procedures if a noncompliant situation is indicated.

3.4.3 Vapor Treatment Based on maximum concentrations of VOCs found within the groundwater during previous studies and assuming 100 percent volatilization, the total organic maximum emission rate from the air stripper will be less than 0.22 pound per hour (summed value of maximum emission rate [see Column 2 in Table 2-1]). Preliminary air modeling indicates that air pollution control equipment is not needed for protection of human health. Final air modeling should be

performed based on actual equipment to be used by the RAC contractor. Air monitoring during startup will confirm this initial conclusion.

3.4.4 Effluent Tanks If discharge to the POTW is only allowed during non-peak hours, the water from the air stripper sump will be transferred to one of two 20,000-gallon effluent tanks by the air stripper transfer pump. Solenoid valves will control inlet valves to each of the tanks. A high level in a tank will close its respective solenoid valve to prevent further flow to the tank. A low level switch will be set to reopen the solenoid valve at a water level considered to be safe to resume filling activities for that tank. Both inlet solenoid valves will be equipped with position indicator lights. If a high level condition exists in both tanks and both solenoid valves are closed, the air stripper transfer pump will shut off. A fail safe method to protect the air stripper transfer pump is the high pressure switch to shut off the pump if a high pressure condition occurs, such as closed or blocked lines downstream of the pump.

At each tank outlet, a timer will operate a solenoid valve to open or close the valve according to the discharge permit with the POTW. Both effluent solenoid valves will be equipped with position indicator lights.

Connection to the sewer system will be made at a manhole located at the northeast corner of Building 391.

3.5 PERFORMANCE WELLS. Four additional wells, or piezometers, are proposed to monitor the system's performance and progress. The wells will be installed during the construction phase at the locations shown in Figure S-01 in the drawing section of Appendix A. The wells will be installed approximately 13 to 15 feet bls with a 10-foot screen section to allow for seasonal fluctuations in groundwater levels. The specification for installation and completion will be identical to the previously installed wells at the site, as dictated by the SOUTHNAVFAC-ENGCOM (1989) *Guidelines for Groundwater Monitoring Well Installation*. Site-specific design considerations for the wells are summarized based on SOUTHNAVFAC-ENGCOM guidelines.

- All well casings will be flush-threaded, 2-inch-diameter, Schedule 40 PVC.
- Well screens will be flush-threaded, 2-inch-diameter, Schedule 40 PVC, with 0.020-inch slot.
- The filter pack will be 98 percent pure silica, cleaned with potable water and will have a coefficient of uniformity of at least 2.5. Specifications for filter packs are shown in Table 3-7.
- Bentonite will be at least 90 percent montmorillonite clay, with a bulk dry density of 80 pounds per cubic foot, a specific gravity of 1.2, and a pH of 8.8 to 10.5.
- Portland cement will conform to American Society for Testing and Materials (ASTM) C150, Type 1.
- The cover will be a locking, stainless-steel cover, square, and 5 feet in length.

- The concrete pad will be 2 inches bls (3 feet by 4 feet by 6 inches) (ASTM C150).

**Table 3-7**
**Filter Pack Material Specifications, Performance Wells**

Performance Specification
Site 6, Fire-fighting Training Area
Naval Construction Battalion Center Gulfport
Gulfport, Mississippi

| Sieve Number | Percent Retained |
|---|---|
| 8 | 0 to 12 |
| 10 | 14 to 30 |
| 16 | 72 to 88 |
| 20 | 80 to 96 |
| 30 | 84 to 100 |

Note: Filter pack material shall fall between these specified ranges and have the succeeding characteristics:

- clean,
- rounded grains,
- 90 percent pure silica, and
- coefficient of uniformity of 2.5 or less.

- The padlock will be brass, corrosion resistant, and keyed alike (ASTM F883).

- Steel protective posts positioned 4 inches off each corner of the pad will be 4 inches in diameter, 6 feet in length, 0.25 inches thick, and concrete filled (ASTM A120). A final coat of high visibility, yellow epoxy paint (AASHTO M220) will be applied.

- A well designation sign made of sheet aluminum will be fastened to the surface casing providing date installed, the name of the company installing the well, well depth, screening interval, and type and diameter of casing and screening material.

Wells located in traffic areas will be completed as flush-mounted, steel, tamper-resistant, traffic-bearing vaults. The inside diameter of the vault will be a minimum 10-inch diameter. For well installations in paved areas, the vault will be centered around the well casing and set in concrete in an appropriately sized excavation in the pavement. For well installations in unpaved areas, the vault will be centered around the well casing and centered in a 2-foot by 2-foot by 4-inch-thick concrete pad. For all installations, the concrete pad placed around the vault will be formed to slope away from the vault toward the edge of the pad to allow for drainage. Each vault will be fitted with an internal drainage tube that is open on both ends and extends from inside the vault to the native soil.

3.6 MATERIALS OF CONSTRUCTION. All piping used for product and groundwater conveyance, treatment, and storage systems will be appropriate for handling

diesel, gasoline, and chlorinated hydrocarbon constituents. Material of construction will also be appropriate for the sea (salt) air environment in the Gulfport area.

**3.7 RESIDUAL DISPOSAL.** Residuals to be disposed during construction include:

- general construction debris,
- personnel protection equipment debris,
- excavated soil from trench construction, and
- water and free product removed (if dewatering is performed).

Residuals to be disposed during system operations include:

- recovered product,
- oil and water separator sludges, and
- sludges from cleaning equipment during maintenance activities.

Residual disposal is the responsibility of the RAC contractor. All residual disposal will be coordinated with the NCBC Gulfport Public Works Department.

# 4.0 MONITORING AND SAMPLING PROGRAM

The monitoring and sampling program is designed to evaluate the performance, progress, and effectiveness of the installed free-phase product recovery system; monitor treatment of associated groundwater; and identify possible methods of improving the performance. This monitoring program will define operational and analytical evaluations for:

- operating parameters and efficiencies from the recovery system,
- operating parameters and efficiencies from the treatment system,
- vapor emissions from the treatment system,
- operation and performance monitoring and maintenance of the system, and
- reporting.

An operation, maintenance, and monitoring (OM&M) plan should be developed by the RAC contractor. The OM&M plan should address specific OM&M needs, actions, sample locations and analytical methods, detection limits, and reporting format in further detail.

**4.1 RECOVERY SYSTEM OPERATING PARAMETERS AND EFFICIENCIES.** Free-phase product depths, thicknesses, and water levels should be measured to evaluate the free-phase product recovery system efficiency and operating parameters. The measurements provide operations data to fine tune and adjust the pump controls to improve system performance. The measurements should be collected twice daily during startup activities, weekly for the first month, then monthly for the first year. These adjustments are beneficial during the initial operations and throughout the life of the system as free-phase product thickness and aquifer conditions fluctuate.

Four additional wells, or piezometers, are proposed to monitor the system performance and progress. A complete round of measurements should include the four proposed wells (or piezometers), all existing monitoring wells, well points, and the collector wells, as shown in Figure S-01 in the drawing section of Appendix A.

**4.2 TREATMENT SYSTEM OPERATING PARAMETERS AND EFFICIENCIES.** The treatment system effluent will be sampled weekly for the first month, monthly for the next 2 months, and then every third month (quarterly) for the first year. The samples will be analyzed for:

- benzene, toluene, ethylbenzene, and xylenes (BTEX) (USEPA Method 602 or 624),
- total petroleum hydrocarbons (TPH) (USEPA Method 418.1), and
- diesel hydrocarbons.

The monitoring and sampling program for the treatment system was created to meet discharge monitoring requirements. Analytical results will be used to evaluate operating parameters to maximize treatment system efficiency and effectiveness.

4.3 VAPOR EMISSIONS FROM TREATMENT SYSTEM. Vapor emissions from the groundwater treatment system will be sampled and analyzed twice for the first month, monthly for the next 2 months, and then every third month for the first year. If after the first year the monitoring results are below the State of Mississippi emissions standards, monitoring will no longer be required. Vapor emissions will be analyzed for VOCs by USEPA Method TO14 (USEPA, 1988b).

4.4 SYSTEM OPERATION, PERFORMANCE, AND MAINTENANCE. The operation and performance of the total system will be monitored twice daily during startup activities, weekly for the first month, then monthly for the first year, which follows the same monitoring schedule as the recovery system. The operation and performance monitoring of the total system will be used to adjust the system to the best possible performance, and to diagnose any immediate maintenance needs. The operation and performance monitoring will also be used to establish a schedule for any required periodic maintenance needs, such as cleaning and rehabilitating pumps, well screens, trench filter material, and piping to maintain optimum system performance. Monitoring of total systems operations and performance will include:

- water levels,
- product levels,
- well efficiencies,
- product thickness trends,
- flow rates and discharge pressure from each of the collector wells,
- discharge rate and pressure,
- volume of recovered product,
- volume of treated groundwater,
- air flow rates from the stripper, and
- readings from all indicators, gauges, meters, etc.

In addition to monitoring the operations, the recovery and treatment systems will be inspected during each event. Any well and/or trench maintenance, as well as system maintenance, will be performed as necessary in addition to regularly scheduled maintenance.

4.5 REPORTING. Table 4-1 presents a summary of the recommended sampling events and associated tasks for the first year of operation. Letter reports summarizing the performance and maintenance of the system will be submitted to the Navy and Mississippi Department of Environmental Quality (MSDEQ) quarterly.

## Table 4-1
## Monitoring and Sampling Schedule, First Year

Performance Specification
Site 6, Fire-fighting Training Area
Naval Construction Battalion Center Gulfport
Gulfport, Mississippi

| | Month | | | | | | | | | | | |
|---|---|---|---|---|---|---|---|---|---|---|---|---|
| Task | 1 | 2 | 3 | 4 | 5 | 6 | 7 | 8 | 9 | 10 | 11 | 12 |
| Measure product and water levels | XXXX | X | X | X | X | X | X | X | X | X | X | X |
| Sample effluent, treatment system | XXXX | X | X | | | X | | | X | | | X |
| Sample vapor emissions[1] | XX | X | X | | | X | | | X | | | X |
| Monitor system operation[2] | XXXX | X | X | X | X | X | X | X | X | X | X | X |

[1] Vapors sampled biweekly for the first month.
[2] System operation monitoring includes monitoring twice daily during startup activities.

Note: X = indicates number of times task to be performed per month.

## REFERENCES


ABB Environmental Services, Inc. (ABB-ES), 1994, Free-Phase Product Assessment Report, Site 6, Fire-Fighting Training Area, Naval Construction Battalion Center, Gulfport, Mississippi: prepared for Southern Division, Naval Facilities Engineering Command (SOUTHNAVFACENGCOM), Task Order No. 096, Contract NO. N62467-89-D-0317.

Franz, T., and Guiguer, N., 1989, FLOWPATH: Waterloo Hydrogeologic Software, Waterloo, Ontario, Canada.

Southern Division Naval Facilities Engineering Command, 1989, Guidelines for Groundwater Monitoring Well Installation: March.

U.S. Environmental Protection Agency (USEPA), 1988a, Screening Procedures for Estimating the Air Quality Impact of Stationary Sources: EPA-450/4-88-010, August.

USEPA, 1988b, Compendium Method TO-14, The Determination of Volatile Organic Compounds (VOCs) in Ambient Air Using Summa Passivated Canister Sampling and Gas Chromatographic Analysis: Quality Assurance Division, Research Triangle Park, North Carolina, May.

# APPENDIX A

# APPENDIX A

## DRAWING SECTION, PERFORMANCE SPECIFICATIONS

# PERFORMANCE SPECIFICATIONS

The system specified is a product recovery and groundwater treatment system, including a recovery trench with three collector wells, an oil and water separator, product tank, air stripper, and two effluent tanks.

Drawings and performance specifications have been prepared to the extent needed to define design requirements that will affect efficiency of the system. Performance specifications have been used to the extent possible to leave flexibility for the construction of the system.

The drawings and performance specifications are presented in the following order:

Section

1.0 Drawings
2.0 Recovery Trench Specification
3.0 Equipment Performance Specifications
4.0 Electrical Components
5.0 Instrument List
6.0 Interlock Logic
7.0 Control Panel Requirements

# 1.0 DRAWINGS

The following drawings are the compilation of the figures and drawings that are referred to throughout the text of this document and these performance specifications.


| Drawings | Drawing No. |
|---|---|
| Site Layout | S-01 |
| Process Flow Diagram | F-01 |
| Recovery Trench Drawing Details | |
| Recovery Trench Cross Section, South-North | D-01 |
| Recovery Trench Cross Section, East-West | D-02 |
| Recovery Trench Vault | D-03 |
| Conveyance Trench | D-04 |
| Piping and Instrumentation Diagrams | |
| Product Recovery | P-01 |
| Air Stripper | P-02 |
| Effluent Tanks | P-03 |

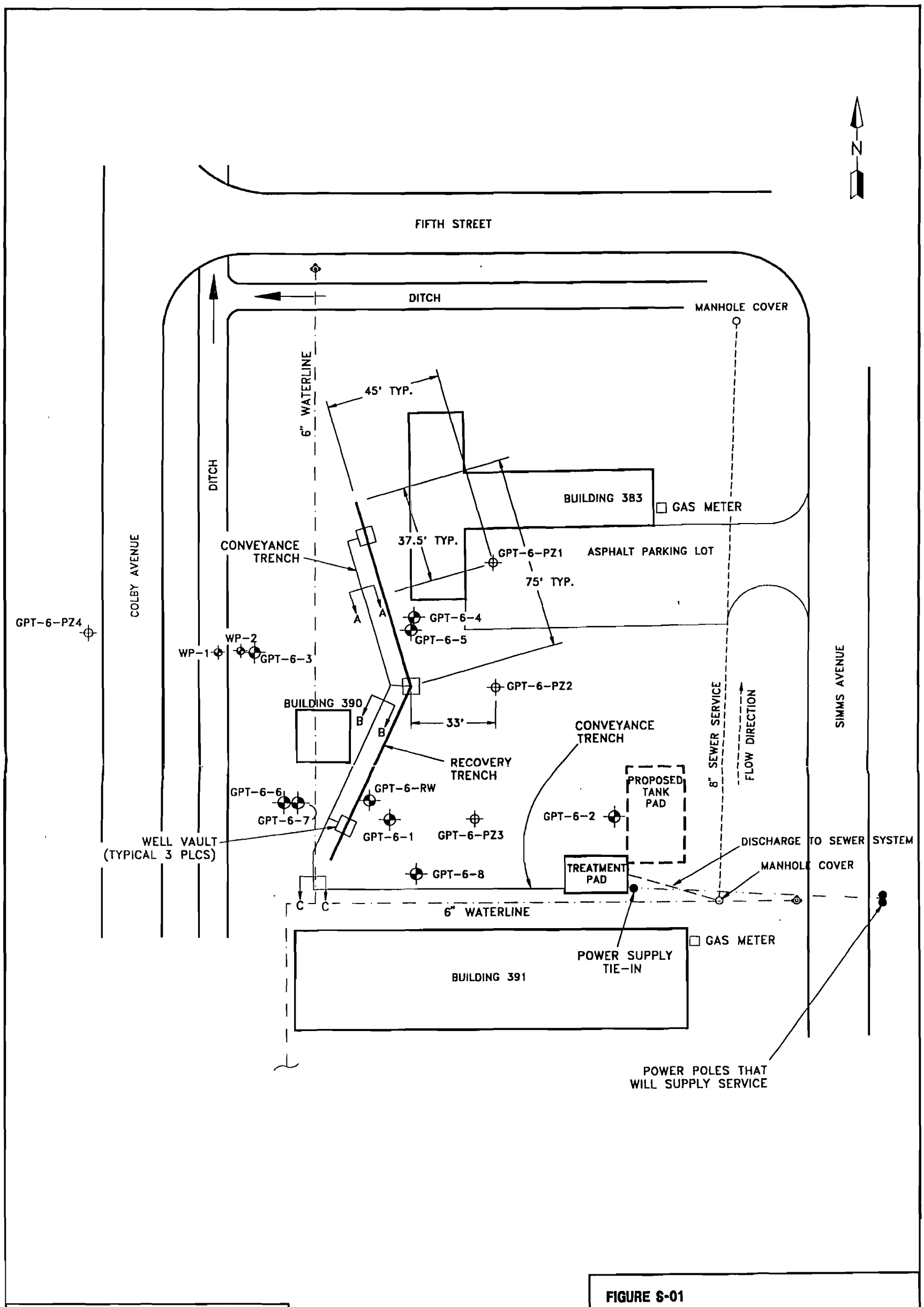


LEGEND

- FIRE HYDRANT
- PROPOSED PIEZOMETER LOCATION
- GPT-6-4 MONITORING WELL LOCATION (EXISTING)
- GPT-6-RW RECOVERY WELL LOCATION (EXISTING)
- WP-1 WELL POINT LOCATION (EXISTING)
- DRAINAGE DITCH
- SURFACE WATER FLOW DIRECTION
- SEWER SERVICE FLOW DIRECTION

NOTES:

PROPOSED TANK PAD MAY BE NEEDED IF EFFLUENT TANKS ARE REQUIRED FOR CONTROLLED FLOW STREAM TO POTW.

0 20 40
SCALE: 1" = 40'

SOURCE: E. PATRICK CASSADY & ASSOC., INC., 1994

**FIGURE S-01**

**SITE LAYOUT**

**FREE-PHASE PRODUCT REMOVAL DESIGN PHASE**

**NCBC GULFPORT**
**GULFPORT, MISSISSIPPI**

C:\GULFPORT\PS\SITE6\NCBC\8505.70\FIGS-01\JSL\941024

| FLOW STREAM | 1 | 2 | 3 | 3 | 4 | 5 | 6 |
|---|---|---|---|---|---|---|---|
| | RECOVERED STREAM | GROUNDWATER | EFFLUENT | EFFLUENT | VAPOR (4) DISCHARGE | AIR (NOTE 5) | PRODUCT |
| Flow (gpm) | 25 | 25 | 25 | | | | <0.1 |
| Water | 25 | 25 | 25 | | | | |
| Product | <0.1 | | | | | | <0.1 |
| Air (cfm) | | | | | | 600 | |
| COMPOUND (ug/L) | (ug/L) | (ug/L) | (ug/L) | (lb/hr) | (lb/hr) | | |
| Benzene | 83 | 83 | <5 | | 0.00104 | | |
| 2-Butanone | 80 | 80 | | | 0.00100 | | |
| Carbon Disulfide | 4 | 4 | | | | | |
| Chloroethane | 310 | 310 | | | 0.0038 | | |
| Chloroform | 20 | 20 | <100 | | 0.00025 | | |
| Chloromethane | 12 | 12 | | | 0.00015 | | |
| 1,1-Dichloroethane | 4900 | 4900 | | | 0.06133 | | |
| 1,2-Dichloroethane | 1200 | 1200 | | | 0.01502 | | |
| 1,1-Dichloroethene | 3100 | 3100 | <7 | | 0.03880 | | |
| 1,2-Dichloroethene (total) | 170 | 170 | | | 0.00213 | | |
| cis-1,2-Dichloroethene | | | <70 | | | | |
| trans-1,2-Dichloroethene | | | <100 | | | | |
| Ethylbenzene | 77 | 77 | <700 | | 0.00096 | | |
| Methylene Chloride | 95 | 95 | <5 | | 0.00119 | | |
| 4-Methyl-2-Pentanone | 100 | 100 | | | 0.00125 | | |
| Tetrachloroethene | 32 | 32 | <5 | | 0.00040 | | |
| 1,1,1 Trichloroethane | 5900 | 5900 | <200 | | 0.07385 | | |
| Trichloroethene | 90 | 90 | <5 | | 0.00113 | | |
| Toluene | 340 | 340 | <1000 | | 0.00426 | | |
| Vinyl Chloride | 35 | 35 | <2 | | 0.00044 | | |
| Xylene | 490 | 490 | <10,000 | | 0.00613 | | |
| | | | | | | | |
| | | | | | | | |
| | | | | | | | |
| Phenol | 48 | 48 | | | | | |
| 2-Methylphenol | 380 | 380 | | | | | |
| 4-Methylphenol | 1100 | 1100 | | | | | |
| 2,4-Dimethylphenol | 56 | 56 | | | | | |
| Naphthalene | 230 | 230 | <400 | | | | |
| 2-Methylnaphthalene | 770 | 770 | | | | | |
| Acenapthene | 48 | 48 | | | | | |
| Fluorene | 23 | 23 | | | | | |
| Phenanthrene | 350 | 350 | | | | | |
| alpha-Chlordane | 0.14 | 0.14 | <200 | | | | |
| OCDD (pg/L) | 15 (Note 2) | 15 (Note 2) | <30 | | | | |
| | | | | | | | |
| DISSOLVED METALS (ug/l) | | | | | | | |
| | | | | | | | |
| Aluminum | 203 | 203 | | | | | |
| Arsenic | 6.0 | 6.0 | <50 | | | | |
| Barium | 259 | 259 | <5000 | | | | |
| Beryllium | <1.0 | <1.0 | | | | | |
| Cadmium | <1.0 | <1.0 | <20 | | | | |
| Calcium | 127,000 | 127,000 | | | | | |
| Chromium | <3.0 | <3.0 | <50 | | | | |
| Cobalt | 7.6 | 7.6 | | | | | |
| Copper | <3.0 | <3.0 | <20 | | | | |
| Iron | 11,200 | 11,200 | | | | | |
| Lead | 1.5 | 1.5 | <100 | | | | |
| Manganese | 718 | 718 | <500 | | | | |
| Mercury | <0.20 | <0.20 | <2 | | | | |
| Nickel | <13.0 | <13.0 | <80 | | | | |
| Selenium | 21.7 | 21.7 | <20 | | | | |
| Vanadium | 2.7 | 2.7 | | | | | |
| Zinc | 62.3 | 62.3 | <50 | | | | |
| | | | | | | | |
| | | | | | | | |
| | | | | | | | |
| | | | | | | | |
| PARAMETERS | | (mg/L) | (mg/L) | | | | |
| | | | | | | | |
| Alkalinity | 17 | 17 | | | | | |
| Hardness | 44 | 44 | | | | | |
| TDS | 78 | 78 | | | | | |
| TSS | <1.0 | <1.0 | <300 | | | | |
| Chloride | 9.9 | 9.9 | | | | | |
| Sulfate | 14 | 14 | | | | | |
| BOD, 5 Day | 13 | 13 | <300 | | | | |
| COD | 36 | 36 | | | | | |

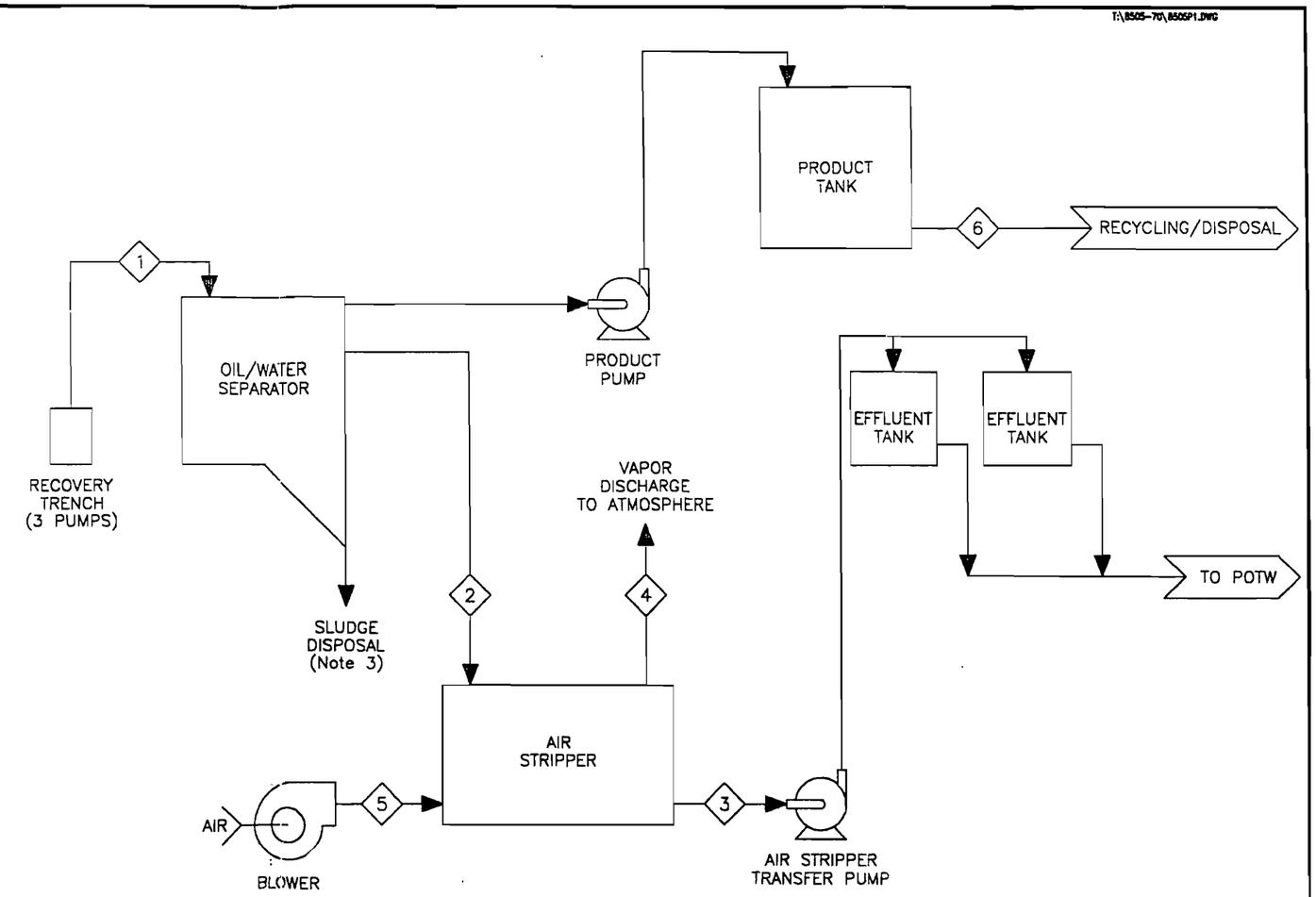


NOTES:

(1) THIS PROCESS FLOW DIAGRAM STATES EFFLUENT CRITERIA BASED ON PERFORMANCE REQUIREMENTS FOR THE SYSTEM. ORGANIC COMPOUND EFFLUENT CRITERIA ARE BASED ON FEDERAL MAXIMUM CONTAMINANT LEVELS FOR DRINKING WATER. METALS EFFLUENT CRITERIA ARE BASED ON POTW ACCEPTANCE CRITERIA.

(2) USING THE TOXICITY EQUIVALENT FACTOR FOR THE CONCENTRATION OF 15,000 FOR OCDD IS EQUIVALENT TO 15 pg/L TCDD.

(3) SLUDGES WILL BE REMOVED PERIODICALLY.

(4) ASSUME TOTAL VAPORIZATION FOR WORST CASE SCENARIO.

(5) AIR FLOW RATE IS BASED ON THEORETICAL REQUIREMENTS USING A LOW PROFILE AIR STRIPPER. ACTUAL FLOW RATE WILL DEPEND ON ACTUAL EQUIPMENT USED.

**FIGURE F-01**
**PROCESS FLOW DIAGRAM**

**PRODUCT RECOVERY/ GROUNDWATER TREATMENT SYSTEM**
**SITE 6 - FIRE TRAINING AREA**
**NCBC GULFPORT**
**GULFPORT, MS.**

C:\GULFPORT\RDP\SITE6\8505.70\FIG8505P2\JSL\940804

Per_Spe.GLP
mlv.11.94

## DRAWING DETAILS

A Steel, water tight, lockable, capable of withstanding AASHTO H20 loading.

B 3-foot by 3-foot by 2.5-foot (inside dimensions) precast concrete vault, walls 4 inches thick.

C Power, control, or air line conduit, 1.5-inch to 2.0-inch PVC, hard pipe to 3 to 6 inches inside vault, then flexible hose into well.

D Process stream piping, 1.5-inch-diameter piping, hard pipe to ball valve, 3 to 6 inches inside vault, then flexible hose into well after coupling.

E Grout between stainless-steel well pipe and precast concrete vault.

F Cable winch with galvanized or stainless-steel cable, 300 pound breaking strength.

G 4- to 6-inch ID well cap seal with openings for pump cable, discharge line, power, control or air line, and a 1-inch-diameter opening for water level readings.

I Granular filter material.

J Trench lateral diffusion (maintenance) pipe, 1.5-inch-diameter PVC with 0.02 inch slots, ends capped inside vaults.

K HDPE liner, 20 mil thickness.

L HDPE liner, overlapping 6 inches upside of vault and fastened. Fastening determined by contractor.

M 10-inch-diameter opening in vault for collector well, filled with grout.

N 1½-inch full port stainless-steel/brass ball valve.

O 1½-inch Y-strainer, polyvinyl chloride/brass.

P Quick-disconnect coupling.

Q 8-inch length PVC drain, installed with screen over drain entrance.

R Stainless-steel vertical collector well, 4 to 6 inches in diameter.

S Existing soil.

T Submersible pump.

U Native soil backfill compacted to existing conditions with native soil.

W 1½-inch check valve.

X Pressure indicator.

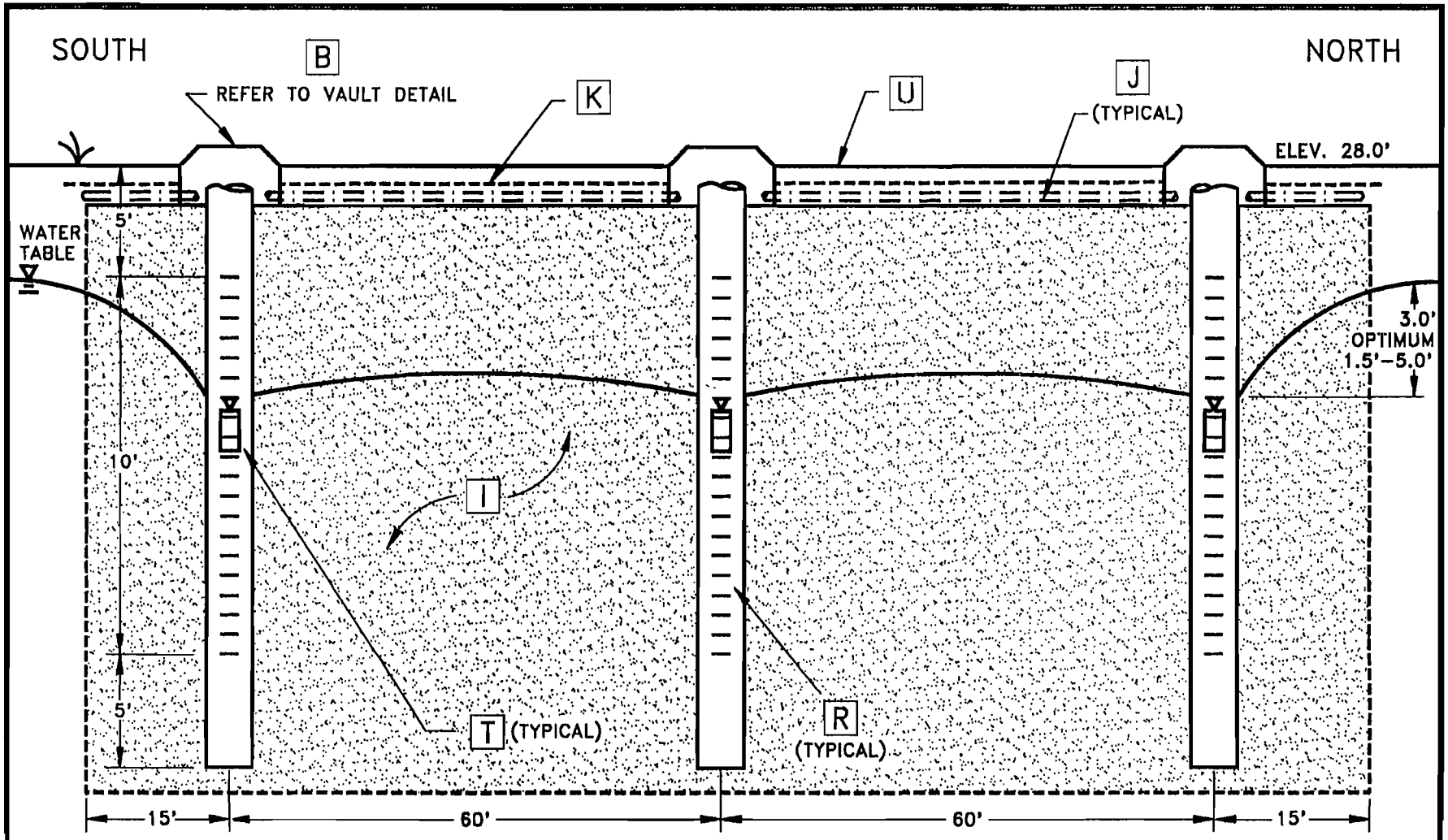


NOTES:

FOR NOTES REFER TO DRAWING DETAILS.

DRAWING NOT TO SCALE

ALL ELEVATIONS ARE MEAN LOW WATER.

**FIGURE D-01**

**RECOVERY TRENCH CROSS SECTION SOUTH TO NORTH**

**FREE-PHASE PRODUCT REMOVAL DESIGN PHASE**

**NCBC GULFPORT GULFPORT, MISSISSIPPI**

C:\GULFPORT\PS\SITE6\NCBC\8505.70\FIGD-01\JSL\941107

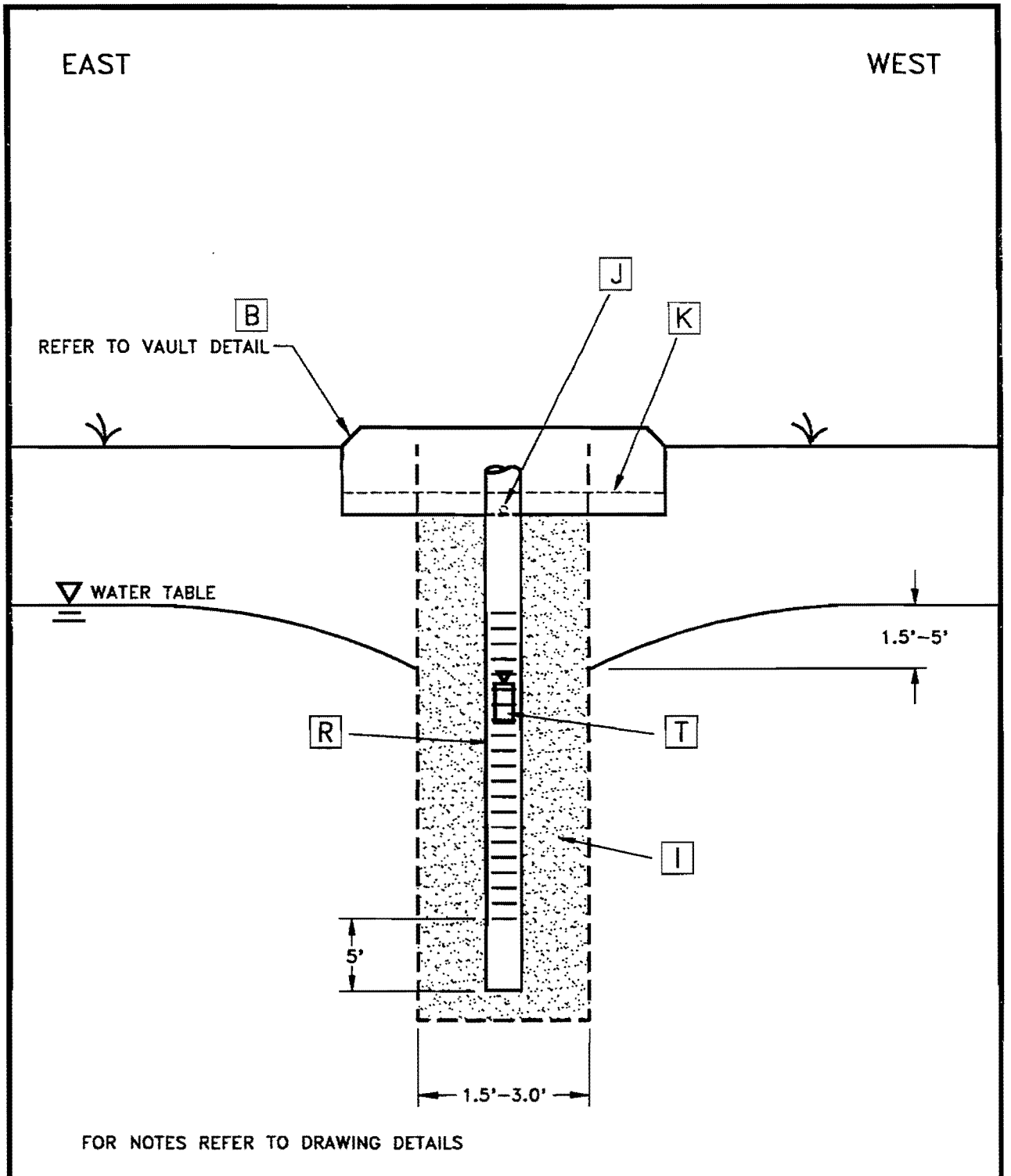


**FIGURE D-02**

**RECOVERY TRENCH CROSS SECTION, EAST TO WEST**

**FREE-PHASE PRODUCT REMOVAL DESIGN PHASE**

**NCBC GULFPORT GULFPORT, MISSISSIPPI**

C:\GULFPORT\PS\SITE6\NCBC\8505.70\FIGD-02\JSL\941117

Per_Spe.GLP
mlv.11.94

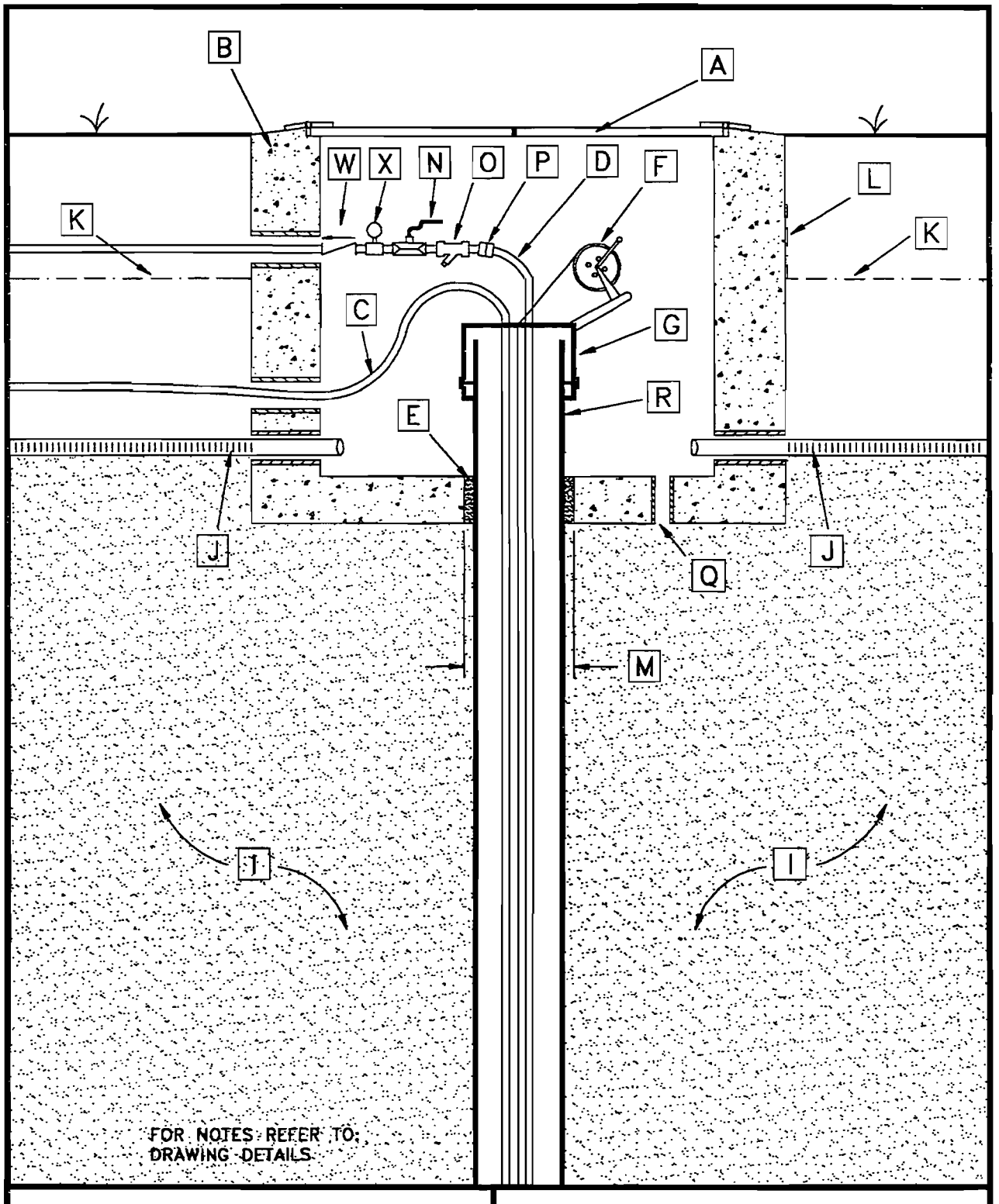


**FIGURE D-03**

**RECOVERY TRENCH VAULT**

**FREE-PHASE PRODUCT REMOVAL DESIGN PHASE**

**NCBC GULFPORT**
**GULFPORT, MISSISSIPPI**

C:\GULFPORT\PS\SITE6\NCBC\8505.70\FIGD-03\JSL\941117

Per_Spe.GLP
mlv.11.94

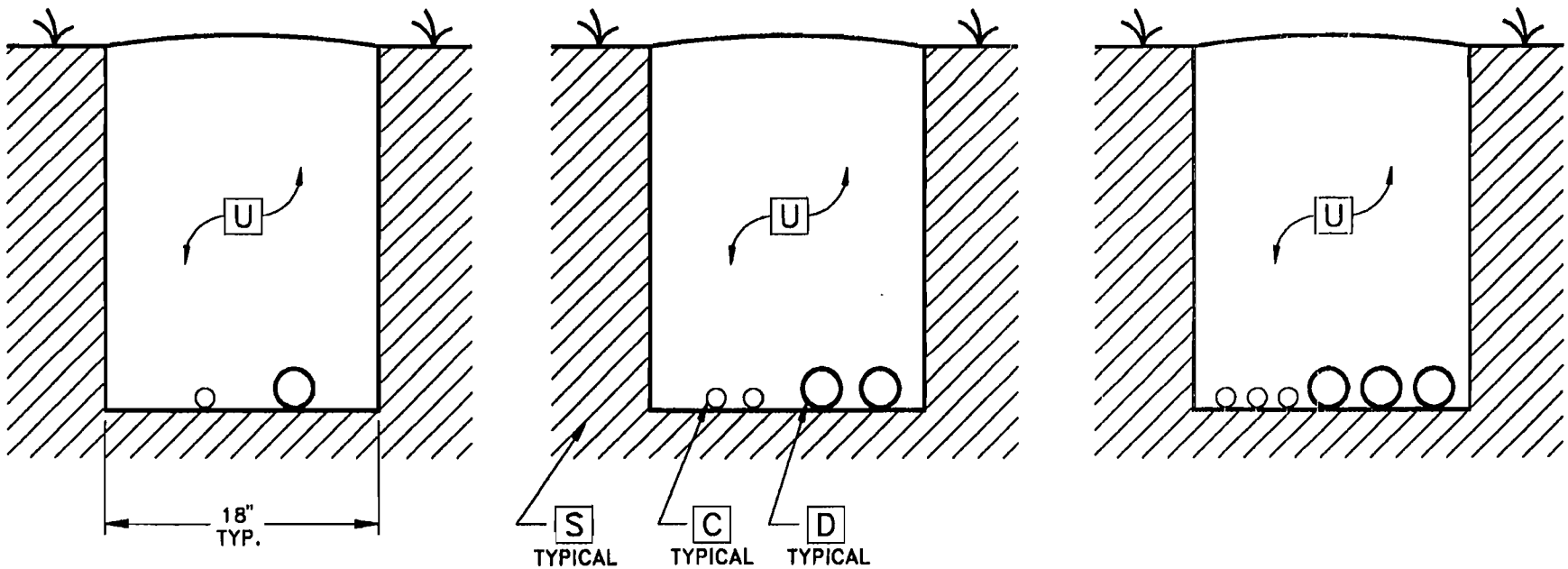


SECTION A–A

SECTION B–B

SECTION C–C

NOTES:

FOR NOTES REFER TO DRAWING DETAILS

SEE DRAWING S–01 FOR CROSS SECTION LOCATIONS

**FIGURE D-04**

**CONVEYANCE TRENCH**

**FREE-PHASE PRODUCT REMOVAL DESIGN PHASE**

**NCBC GULFPORT GULFPORT, MISSISSIPPI**

C:\GULFPORT\PS\NCBC\8505.70\FIGD-04\JSL\940808

THIS PAGE INTENTIONALLY LEFT BLANK.

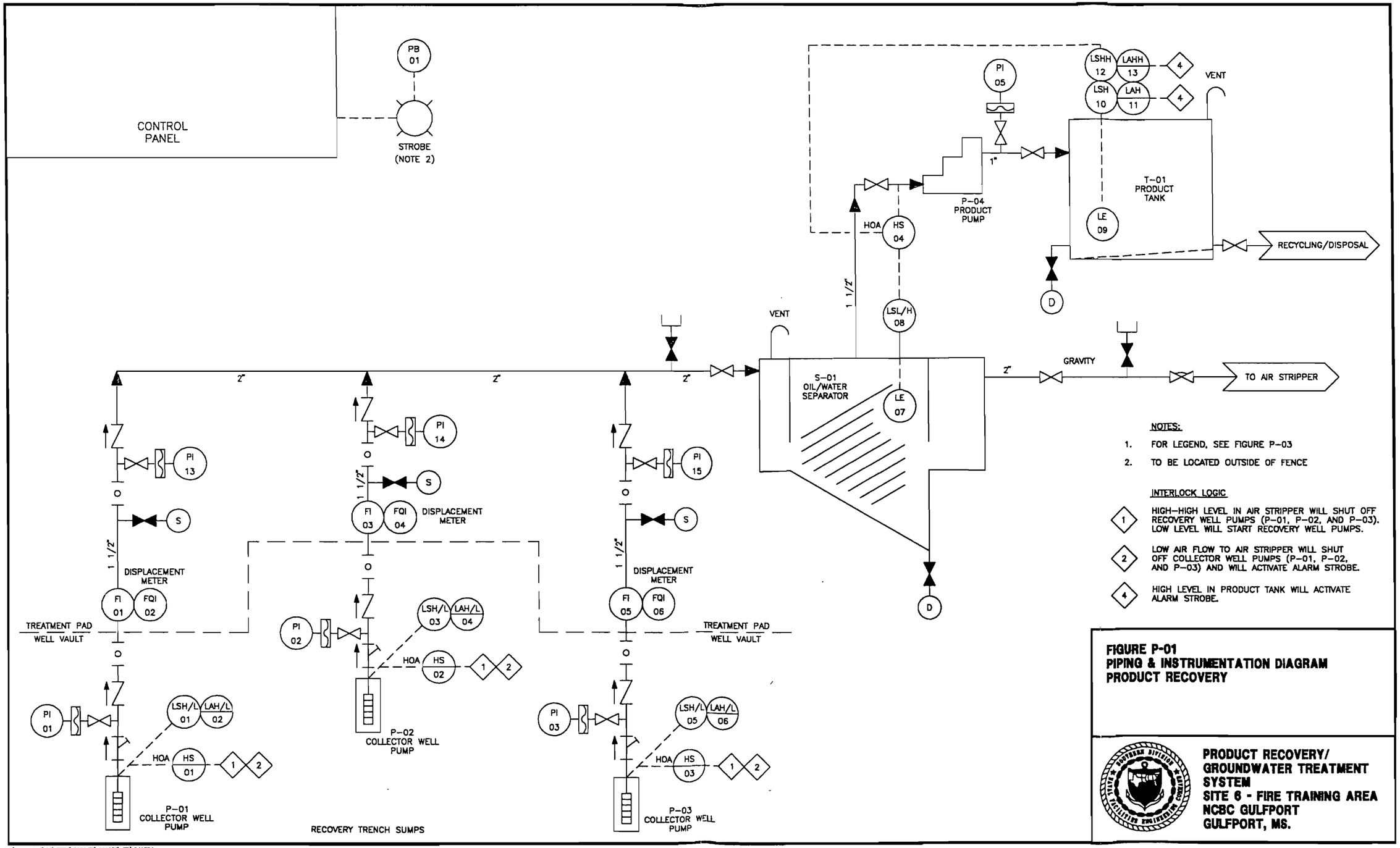


NOTES:

1. FOR LEGEND, SEE FIGURE P-03
2. TO BE LOCATED OUTSIDE OF FENCE

INTERLOCK LOGIC

1. HIGH-HIGH LEVEL IN AIR STRIPPER WILL SHUT OFF RECOVERY WELL PUMPS (P-01, P-02, AND P-03). LOW LEVEL WILL START RECOVERY WELL PUMPS.
2. LOW AIR FLOW TO AIR STRIPPER WILL SHUT OFF COLLECTOR WELL PUMPS (P-01, P-02, AND P-03) AND WILL ACTIVATE ALARM STROBE.
4. HIGH LEVEL IN PRODUCT TANK WILL ACTIVATE ALARM STROBE.

**FIGURE P-01**
**PIPING & INSTRUMENTATION DIAGRAM**
**PRODUCT RECOVERY**

**PRODUCT RECOVERY/ GROUNDWATER TREATMENT SYSTEM**
**SITE 6 - FIRE TRAINING AREA**
**NCBC GULFPORT**
**GULFPORT, MS.**

C:\GULFPORT\P3\SITE6\8505.70\8505P2\JSL\841024

Per_Spe.GLP
mlv.11.94

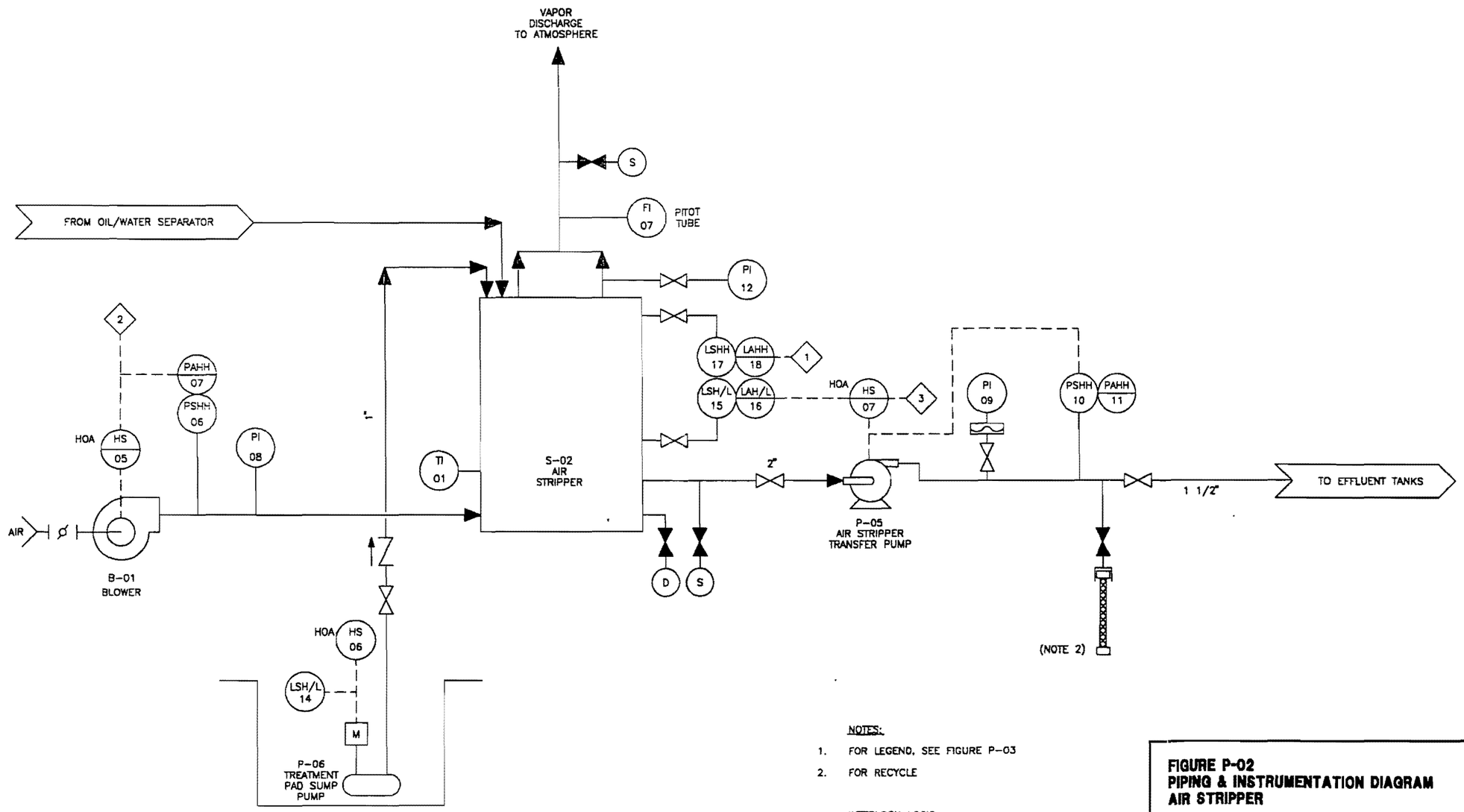


NOTES:

1. FOR LEGEND, SEE FIGURE P-03
2. FOR RECYCLE

INTERLOCK LOGIC

1. HIGH-HIGH LEVEL IN AIR STRIPPER WILL SHUT OFF COLLECTOR WELL PUMPS (P-01, P-02, AND P-03). LOW LEVEL WILL START COLLECTOR WELL PUMPS.
2. LOW AIR FLOW TO AIR STRIPPER WILL SHUT OFF COLLECTOR WELL PUMPS (P-01, P-02, AND P-03) AND WILL ACTIVATE ALARM STROBE.
3. HIGH LEVEL IN BOTH EFFLUENT TANKS WILL SHUT OFF AIR STRIPPER TRANSFER PUMP.

**FIGURE P-02**
**PIPING & INSTRUMENTATION DIAGRAM**
**AIR STRIPPER**

**PRODUCT RECOVERY/**
**GROUNDWATER TREATMENT**
**SYSTEM**
**SITE 6 - FIRE TRAINING AREA**
**NCBC GULFPORT**
**GULFPORT, MS.**

C:\GULFPORT\PS\SITE6\8505.70\8505P2\JSL\841011

Per_Spe.GLP
mlv.11.94

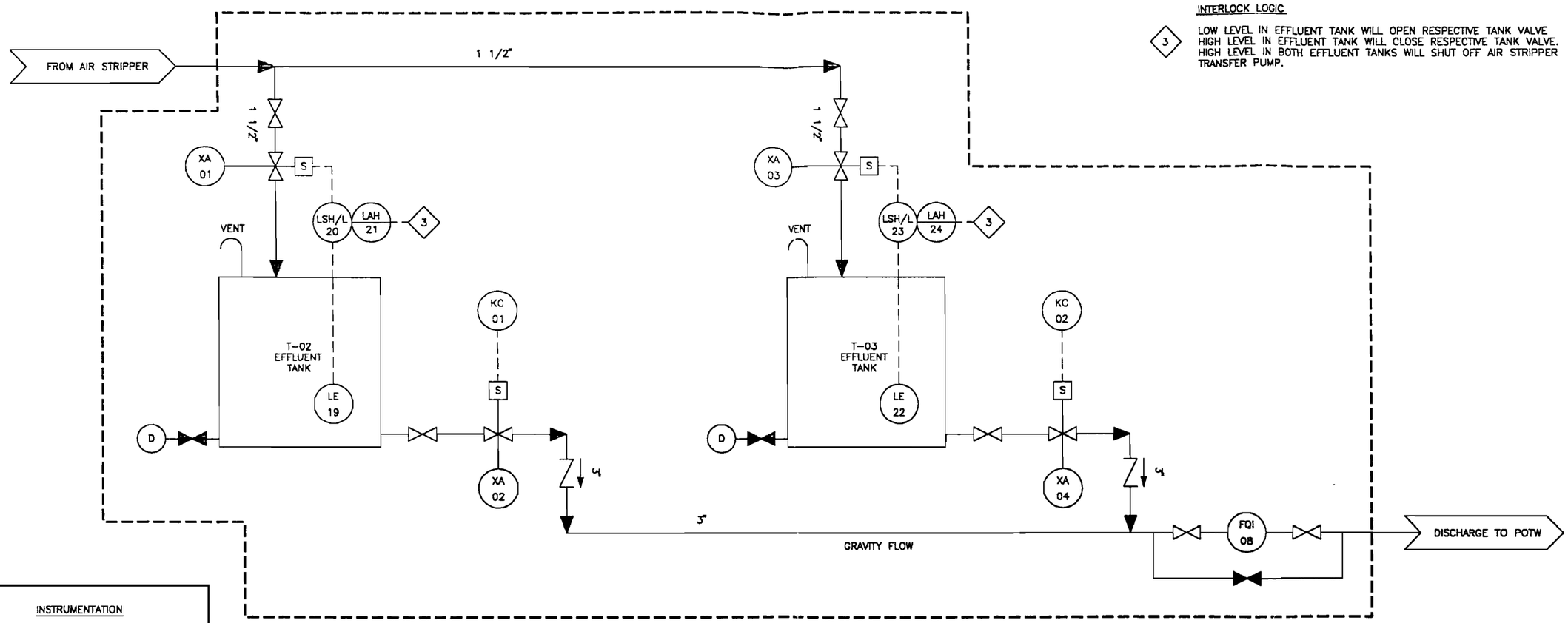


INTERLOCK LOGIC

3 — LOW LEVEL IN EFFLUENT TANK WILL OPEN RESPECTIVE TANK VALVE. HIGH LEVEL IN EFFLUENT TANK WILL CLOSE RESPECTIVE TANK VALVE. HIGH LEVEL IN BOTH EFFLUENT TANKS WILL SHUT OFF AIR STRIPPER TRANSFER PUMP.

INSTRUMENTATION

| | |
|---|---|
| FI | FLOW INDICATOR |
| FQI | FLOW TOTALIZING INDICATOR |
| HS | HAND SWITCH |
| HOA | HAND/OFF/AUTO |
| LSH/L | LEVEL SWITCH HIGH/LOW |
| LAH/L | LEVEL ALARM HIGH/LOW |
| LSHH | LEVEL SWITCH HIGH-HIGH |
| LAHH | LEVEL ALARM HIGH-HIGH |
| LE | LEVEL ELEMENT |
| PI | PRESSURE INDICATOR |
| TI | TEMPERATURE INDICATOR |
| PSHH | PRESSURE SWITCH HIGH-HIGH |
| PAHH | PRESSURE ALARM HIGH-HIGH |
| PB | PUSH BUTTON |
| KC | TIMER CONTROL |
| XA | POSITION LIGHT |

LEGEND OF SYMBOLS

BLOWER
POSITIVE DISPLACEMENT PUMP
LINE BREAK OR RESUMPTION POINT
PRIMARY PROCESS
ELECTRICAL
DIAPHRAGM
SUBMERGED SUMP PUMP
CHECK VALVE
BALL VALVE
OPEN GATE VALVE
LOUVER IN AIR SERVICE
DIRECT CONNECTION BLOCK VALVE
Y-STRAINER
CENTRIFUGAL PUMP
ELECTRICAL CONNECTION
DIRECT CONNECTION
IN-LINE DEVICE
INSTRUMENT LOCATED ON CONTROL PANEL
CAMLOCK FITTING
CLOSED GATE VALVE
TOTAL FLUIDS RECOVERY PUMP
INTERLOCK LOGIC OR SEQUENTIAL CONTROL
DIAPHRAGM VALVE
STROBE
SOLENOID VALVE
DRAIN
SAMPLE TAP
FLEXIBLE HOSE

**FIGURE P-03**
**PIPING & INSTRUMENTATION DIAGRAM**
**EFFLUENT TANKS**

**PRODUCT RECOVERY/ GROUNDWATER TREATMENT SYSTEM**
**SITE 6 - FIRE TRAINING AREA**
**NCBC GULFPORT**
**GULFPORT, MS.**

C:\GULFPORT\PS\SITE6\B505.70\B505P2\JSL\941024

Per_Spe.GLP
mlv.11.94

## 2.0 RECOVERY TRENCH SPECIFICATION

A recovery trench will be installed to recover the free-phase product by actively depressing the groundwater through pumping.

Specifications and performance requirements for the recovery trench are defined as follows.

- Dimension. Two sections totaling 150 feet in length, approximately 1.5 to 3.0 feet wide, and a depth of approximately 21 feet below land surface (bls).
- Configuration. Chevron shaped.
- Performance. Support a pumping rate of 7 to 25 gallons per minute (gpm) while maintaining a drawdown of 1.5 to 5.0 feet, with 3.0 feet being expected.

Materials for Recovery Trench Construction (refer to Drawings D-01 and D-02)

Granular filter material:

- specified size ranges and characteristics in Table A.2-1,
- final grade to 1 foot bls, and
- moisture compacted by saturating with clean water.

**Table A.2-1**
**Specification: Granular Filter Material**

Performance Specification
Site 6, Fire-Fighting Training Area
Naval Construction Battalion Center Gulfport
Gulfport, Mississippi

| D-Size Finer | Size Range (millimeter) |
|---|---|
| $D_0$ | 0.20 to 0.70 |
| $D_{10}$ | 0.45 to 1.50 |
| $D_{30}$ | 0.90 to 2.90 |
| $D_{50}$ | 1.05 to 3.50 |
| $D_{60}$ | 1.13 to 3.75 |
| $D_{70}$ | 1.25 to 4.00 |
| $D_{90}$ | 2.00 to 6.30 |
| $D_{100}$ | 3.50 to 9.53 |

Notes: Range provides for 16 percent to 86 percent medium sand.

Granular filter pack material should fall between these specified ranges and follow the succeeding characteristics:
- clean,
- well rounded grains,
- 90 to 95 percent quartz grains, and
- coefficient of uniformity of 2.5 or less.

Collector Wells:

Collector Wells:

- stainless-steel, Schedule 10S, Type 304 with flush-joint threads,
- 4 to 6 inches in diameter, and
- wire wrap, 0.020-inch continuous slot well screen from 5 to 15 feet bls.

Lateral Diffusion Pipe (Maintenance):

- PVC,
- 1.5-inch diameter,
- 0.020-inch slots, and
- sleeved into recovery trench vault and capped.

Liner:

- HDPE,
- 20 mil thickness,
- 1 foot overlap on any seams, and
- fastened 6 inches on side of recovery well vault.

Backfill:

- clean existing native soil, and
- back to existing condition with native soil.

Vaults (refer to Drawing D-03):

- 3 feet by 3 feet by 2.5 feet deep (inside dimensions).

- Precast concrete walls and floor, 4 inches thick.

- Steel, water tight, lockable, split-lid cover capable of withstanding AASHTO H20 loading.

- Cable and winch assembly with galvanized or stainless-steel cable, 300-pound breaking strength.

- 4- to 6-inch diameter, steel well cap seal with openings for pump cable; discharge line; power, control or airline; and a 1-inch-diameter opening for water level readings. Cap held in place by fastening screws, with winch assembly attached.

- Discharge line is flexible, product-resistant from the submersible pump to the quick disconnect fitting. Six feet of slack will be left in discharge line for pump adjustment. Discharge line will be hard piped into the vault with 1.5-inch, galvanized, carbon steel pipe and include a full port stainless-steel/brass ball valve; 1½-inch, PVC/brass Y-stainer; and a quick disconnect coupling to the flexible piping.

- Power, control, or air line conduit should be hard piped 3 to 6 inches into vault with 1.5-inch to 2.0-inch PVC. Line following the hard pipe should be flexible and have 6 feet of slack for pump adjustment.

Conveyance Trench (refer to Drawing D-04):

- Discharge line to treatment system will be 1.5-inch-diameter, galvanized, carbon steel.

- Power, control, or air line conduit will be 1.5- to 2.0-inch-diameter PVC.
- All lines will run independently to the treatment system then manifolded together.
- The conveyance trenching will be 1.5 to 2.0 feet wide, with a minimum of 2.0 feet of cover.
- Backfill will be native soil compacted to 95 percent of the standard proctor ASTM D698.
- Backfill cover should be mounded, as shown in Drawing D-04, in case of additional settling.

## 3.0 EQUIPMENT PERFORMANCE SPECIFICATIONS

**Table A.3-1**
**Equipment List**

Performance Specification
Site 6, Fire-Fighting Training Area
Naval Construction Battalion Center Gulfport
Gulfport, Mississippi

| Equip. No. | Equipment Name | Figure No. | Notes |
|---|---|---|---|
| **B-01** | Blower | P-02 | Specified in air stripper specification |
| **P-01** | Collector well pump | P-01 | 0-10 gpm, positive displacement at 35-foot head |
| **P-02** | Collector well pump | P-01 | 0-10 gpm, positive displacement at 35-foot head |
| **P-03** | Collector well pump | P-01 | 0-10 gpm, positive displacement at 35-foot head |
| **P-04** | Product pump | P-01 | Specified in oil and water separator specification |
| **P-06** | Treatment pad sump pump | P-02 | 10 gpm, operating head determined by contractor |
| **S-01** | Oil and water separator | P-01 | 25 gpm |
| **S-02** | Air stripper | P-02 | 25 gpm |
| **T-01** | Product tank | P-01 | 2,000 gallon |

Note: gpm = gallons per minute.

**Table A.3-2**
**Potential Equipment List**

Performance Specification
Site 6, Fire-Fighting Training Area
Naval Construction Battalion Center Gulfport
Gulfport, Mississippi

| Equipment No. | Equipment Name | Figure No. | Notes |
|---|---|---|---|
| **P-05** | Air stripper transfer pump | P-02 | Specified in air stripper specification |
| **T-02** | Effluent tank | P-03 | 20,000 gallon |
| **T-03** | Effluent tank | P-03 | 20,000 gallon |

## COLLECTOR WELL PUMPS
## P-01, P-02, AND P-03

Provide three submersible total fluids pumps to be installed in the vertical collector wells as part of the recovery trench.

Operating requirements are as follows:

- positive displacement,
- top filling,
- maintain constant static water level drawdown of 1.5 to 5.0 feet,
- capacity for continuous flow rates between 2 and 10 gpm,
- overcome a minimum total system head of 35 feet, and
- liquid level control.

Pumps and associated local instrumentation shall be suitable for a National Electrical Code (NEC) Class 1, Division 1, Group D environment.

## TREATMENT PAD SUMP PUMP
## P-06

Provide a sump pump to transfer fluids from treatment pad sump to air stripper or oil and water separator. The suggested design flow rate is 10 gpm.

Provide an oil and water separator capable of handling a flow rate of 25 gpm of a combined groundwater and petroleum product flow stream. The separator must be equipped with a product resistant coalescing packing, an adjustable effluent weir and a sludge compartment. The oil and water separator must provide service as indicated on Drawings F-01, P-01, P-02, and P-03 and must be capable of:

- removing all free-phase petroleum product from the groundwater to produce an effluent with less than 10 parts per million (ppm) of free-phase hydrocarbon concentrations, and

- gravity flow of water to the air stripping unit.

The product characteristics are:

- 55 to 60 percent diesel fuel,
- 40 percent heavier hydrocarbons,
- less than 10 percent gasoline,
- viscosity at 59 degrees Fahrenheit (°F) is 29.6 centistokes,
- surface tension at room temperature is 30 dynes per centimeter,
- interfacial tension at room temperature is 26,
- API gravity is 30.4,
- specific gravity is 0.8740,
- heat of combustion is 19,533 Btu per pound, and
- 0.1 percent of total flow.

Additional requirements of the oil and water separator are as follows.

- The coalescing packing must aid in the product separation and must be easily removed for cleaning and maintenance.

- The sludge compartment must be conducive to the development of a sludge blanket and must be designed for easy removal of the sludges from the separator.

- The oil and water separator must be vapor tight and is to be vented a minimum of 12 feet above ground surface.

- Provide a product transfer pump to transfer product from oil and water separator to the product tank. Pump must operate automatically based on product level in the oil and water separator and will shut off on high level in the product tank.

- The oil and water separator shall be factory assembled in a manner that will minimize field assembly, including all necessary appurtances to connect separator to the appropriate pieces of equipment.

- The oil and water separator is to be mounted on an equipment skid to allow for easy placement with a fork lift. Install all necessary piping and appurtances, not already pre-assembled, to connect oil and water separator to the appropriate pieces of equipment.

- The oil and water separator shall be constructed of material appropriate for handling diesel, gasoline, and chlorinated hydrocarbon compounds. Material of construction shall also be appropriate for sea (salt) air environment.

- The oil and water separator will be enclosed in a fence outside. Equipment and instrumentation must meet National Electrical Manufacturers Association (NEMA) Type 7 rating, suitable for a NEC Class 1, Division 1, Group D environment.

Groundwater from the oil and water separator is to flow via gravity into the air stripper. A low profile tray tower or diffused aeration tank may be used. The air stripper unit must provide service as indicated on Drawings F-01, P-01, P-02, and P-03.

- Provide an air stripping unit designed to achieve the discharge requirements indicated on Table A.3-3 at a design flow rate of 25 gpm. The air stripper internals shall be easily accessible for cleaning and maintenance. Low profile air stripper shall have easily removed trays or diffuser internals. Diffused aeration tanks shall have a vapor tight, hinged lid. Fittings will not be allowed on the hinged lid. The aeration diffusers shall be easily removable for scale removal and maintenance. Unit must be capable of gravity flow to a nearby sewer connection.

- Provide a 2-inch influent line for gravity flow from the oil and water separator to the air stripper. Inlet line shall contain a sample tap and a water leg to prevent exhaust air from escaping through the water inlet.

- Provide a blower capable of delivering an air flow rate required to achieve water discharge requirements as listed in Table A.3-3. The blower's motor must operate on 230-volt AC, single or three-phase electric power. Blower shall be equipped with a hand switch for on, off, and automatic control. A high pressure switch will shut off system, including collector well pumps, in the event of high blower discharge pressure.

- Provide adjustable air flow damper and screen on blower inlet.

- Provide water leg on effluent to prevent air flow through discharge line.

- Provide the following accessories mounted on the diffused aeration or low profile air stripper unit:

    - an 0- to 10-inch, direct reading, magnahelic gauge placed on blower outlet;

    - an 0- to 10-inch, direct reading, magnehelic gauge placed on unit vapor space;

    - a 32 °F to 120 °F, direct reading, thermometer placed to monitor water temperature;

    - all mechanical nozzles and fixtures required for future installation of vapor treatment if needed; and

    - provide appropriate demister for the vapor discharge.

- Provide a stack to discharge vapors at a height determined by air modeling to be safe to health and environment. Stack must be equipped with a sample port for vapors and a pitot tube accurately sized for design vapor flow rate. Flow gauge shall be mounted following good engineering practice for flow meter installation. Meter shall be easily removable for maintenance if needed.

- If gravity flow to the publicly owned treatment works (POTW) is provided, a siphon breaker is required on the discharge line from the air stripper.

- The air stripper, control panel, blower, and possible air stripper transfer pump (potential equipment) are to be skid-mounted on an equipment skid and properly connected at the factory. The skid is to allow easy transport and placement with a forklift.

- The air stripper unit and appurtenances shall be factory assembled in a manner that will minimize field assembly, including all necessary appurtances to connect stripper to the appropriate pieces of equipment.

- The air stripper shall be constructed of material appropriate for handling diesel, gasoline, and chlorinated hydrocarbon compounds. Material of construction shall also be appropriate for sea (salt) air environment.

- The air stripper will be enclosed in a fenced area. All system equipment and instrumentation must meet NEMA Type 3R rating. If placed immediately adjacent to an equipment-handling petroleum product, the air stripper motors and instrumentation may require a NEMA Type 7 rating, suitable for a NEC Class 1, Division 1, Group D environment.

## POTENTIAL EQUIPMENT

Potential equipment may be needed if a controlled flow stream to the POTW is required.

- Provide a sump integral to the unit equipped with level controls for operation of a transfer pump.

- Provide an air stripper transfer pump capable of pumping 25 gpm at a total dynamic head of 25 feet of water column of treated effluent to the effluent tanks.

**Table A.3-3**
**Air Stripper Performance Criteria**

Performance Specification
Site 6, Fire-Fighting Training Area
Naval Construction Battalion Center Gulfport
Gulfport, Mississippi

| Analyte | Maximum Inlet Concentration | Average Concentration | Maximum Effluent Criteria |
|---|---|---|---|
| **Volatile Organic Compounds (μg/ℓ)** | | | |
| Vinyl chloride | 35 J | 28 | 2 |
| Methylene chloride | 95 J | 73 | 5 |
| 1,1-Dichloroethene | 3,100 | 2,450 | 7 |
| 1,2-Dichloroethene (total) | 170 | 83 | 70-cis<br>100-trans |
| Chloroform | 20 J | 17 | 100 |
| 1,2-Dichloroethane | 1,200 | 700 | 5 |
| 1,1,1-Trichloroethane | 5,900 | 4,650 | 200 |
| Trichloroethylene | 90 | 26 | 5 |
| Benzene | 83 J | 38 | 5 |
| Tetrachloroethylene | 32 J | 12 | 5 |
| Toluene | 340 J | 115 | 1,000 |
| Ethylbenzene | 77 J | 30 | 700 |
| Xylene (total) | 490 J | 190 | 10,000 |

Notes: μg/ℓ = micrograms per liter.
J = estimated.

## PRODUCT TANK
## T-01

Provide a 2,000-gallon (minimum), aboveground product storage tank. The tank and its placement must meet the American Petroleum Institute's recommended standards, Underwriters Laboratory standard UL-142, and NFPA 30 and 30A recommended practices. The product storage tank is to be vented a minimum of 12 feet above land surface.

## EFFLUENT TANKS
## T-02 AND T-03

Provide two 20,000-gallon, aboveground storage tanks for temporary storage of treated effluent water before discharge to the POTW. Tanks shall be equipped with level controls to prevent overfilling of the tanks.

## 4.0 ELECTRICAL COMPONENTS

All electrical components associated with the transfer, conveyance, or handling of product shall be suitable for use in a NEC Class 1, Division 1, Group D environment. Explosion proof, NEMA Type 7, electrical enclosures shall be used for the following major equipment and associated local instrumentation:

- collector well pumps,
- oil and water separator,
- product pump, and
- product tank.

The air stripper and transfer pump may also require explosion-proof electrical enclosures if placed immediately adjacent to equipment handling petroleum product.

All other equipment and instrumentation shall be rated for a minimum of NEMA Type 3R.

# 5.0 INSTRUMENT LIST

**Table A.5-1**
**Instrument List**

Performance Specification
Site 6, Fire-Fighting Training Area
Naval Construction Battalion Center Gulfport
Gulfport, Mississippi

| Instrument Tag No. | Drawing No. | Equipment No. | Special Instructions |
|---|---|---|---|
| **Flow** | | | |
| FI-01 | P-01 | | Product and water flow, explosion proof (XP) |
| FQI-02 | P-01 | | Totalizer, product and water flow, XP |
| FI-03 | P-01 | | Product and water flow, XP |
| FQI-04 | P-01 | | Totalizer, product and water flow, XP |
| FI-05 | P-01 | | Product and water flow, XP |
| FQI-06 | P-01 | | Totalizer, product and water flow, XP |
| FI-07 | P-02 | | Vapor flow - sized for air stripper vapor flow |
| FQI-08 | P-03 | | Totalizer, treated effluent |
| **Hand Switches** | | | |
| HS-01 | P-01 | P-01 | Hand/Off/Auto, panel mounted |
| HS-02 | P-01 | P-02 | Hand/Off/Auto, panel mounted |
| HS-03 | P-01 | P-03 | Hand/Off/Auto, panel mounted |
| HS-04 | P-01 | P-04 | Hand/Off/Auto, panel mounted |
| HS-05 | P-02 | B-01 | Hand/Off/Auto, panel mounted |
| HS-06 | P-02 | P-06 | Hand/Off/Auto, panel mounted |
| HS-07 | P-02 | P-05 | Hand/Off/Auto, potential instrument, panel mounted |
| **Timers** | | | |
| KC-01 | P-03 | | Potential instrument |
| KC-02 | P-03 | | Potential instrument |
| **Level** | | | |
| LSH/L-01 | P-01 | P-01 | Product and water total level, XP |
| LAH/L-02 | P-01 | P-01 | Product and water total level, panel mounted |
| LSH/L-03 | P-01 | P-02 | Product and water total level, XP |
| LAH/L-04 | P-01 | P-02 | Product and water total level, panel mounted |
| LSH/L-05 | P-01 | P-03 | Product and water total level, XP |
| LAH/L-06 | P-01 | P-03 | Product and water total level, panel mounted |

See notes at end of table.

## Table A.5-1 (continued)
## Instrument List

Performance Specification
Site 6, Fire-Fighting Training Area
Naval Construction Battalion Center Gulfport
Gulfport, Mississippi

| Instrument Tag No. | Drawing No. | Equipment No. | Special Instructions |
|---|---|---|---|
| LE-07 | P-01 | S-01 | Product level, XP |
| LSL/H-08 | P-01 | S-01 | XP |
| LE-09 | P-01 | T-01 | Product level, XP |
| LSH-10 | P-01 | T-01 | XP |
| LAH-11 | P-01 | T-01 | Panel mounted |
| LSHH-12 | P-01 | T-01 | XP |
| LAHH-13 | P-01 | T-01 | Panel mounted |
| LSH/L-14 | P-02 | P-06 | XP |
| LSH/L-15 | P-02 | S-02 | Float switch, potential instrument |
| LAH/L-16 | P-02 | S-02 | Potential instrument, panel mounted |
| LSHH-17 | P-02 | S-02 | Float switch |
| LAHH-18 | P-02 | S-02 | Potential instrument, panel mounted |
| LE-19 | P-03 | T-02 | Potential instrument |
| LSH/L-20 | P-03 | T-02 | Potential instrument |
| LAH-21 | P-03 | T-02 | Potential instrument, panel mounted |
| LE-22 | P-03 | T-03 | Potential instrument |
| LSH/L-23 | P-03 | T-03 | Potential instrument |
| LAH-24 | P-03 | T-03 | Potential instrument, panel mounted |
| **Pressure** | | | |
| PI-01 | P-01 | P-01 | XP |
| PI-02 | P-01 | P-02 | XP |
| PI-03 | P-01 | P-03 | XP |
| PI-05 | P-01 | P-04 | XP |
| PSHH-06 | P-02 | B-01 | |
| PAHH-07 | P-02 | B-01 | Panel mounted |
| PI-08 | P-02 | B-01 | |
| PI-09 | P-02 | P-05 | Potential instrument |
| PSHH-10 | P-02 | P-05 | Potential instrument |
| PAHH-11 | P-02 | P-05 | Potential instrument, panel mounted |
| PI-12 | P-02 | S-02 | |

See notes at end of table.

## Table A.5-1 (continued)
## Instrument List

Performance Specification
Site 6, Fire-Fighting Training Area
Naval Construction Battalion Center Gulfport
Gulfport, Mississippi

| Instrument Tag No. | Drawing No. | Equipment No. | Special Instructions |
|---|---|---|---|
| **Temperature** | | | |
| TI-01 | P-02 | S-02 | |
| **Miscellaneous** | | | |
| PB-01 | P-01 | | Push button to acknowledge strobe. Shall be accessible outside of fence. |
| XA-01 | P-03 | T-02 | Potential instrument, valve position indicator light to be green for open |
| XA-02 | P-03 | T-02 | Potential instrument, valve position indicator light to be green for open |
| XA-03 | P-03 | T-03 | Potential instrument, valve position indicator light to be green for open |
| XA-04 | P-03 | T-03 | Potential instrument, valve position indicator light to be green for open |

Note: XP = explosion proof.

## 6.0 INTERLOCK LOGIC

The following interlock logic shall be used for automatic equipment and instrumentation control.

1. A high level in each collector well shall start the respective collector well pump. A high level shall be indicated with a red light on the control panel. A low level in each collector well sump shall stop the respective collector well pump. A low level shall be indicated with a green light on the control panel.

2. Each collector well pump shall be controlled with a remote hand switch on the control panel. A red light shall indicate the pump is not running. A green light shall indicate the pump is running.

3. A high level in the product compartment of the oil and water separator shall start the product pump. A low level shall stop the product pump.

4. A remote hand switch on the control panel shall control the operation of the product pump. A red light shall indicate the pump is not running. A green light shall indicate the pump is running.

5. A high level in the product tank shall be indicated by a red light on the control panel and shall activate the alarm strobe.

6. A high-high level in the product tank shall shut off product pump and shall be indicated by a red light on the control panel and shall activate the alarm strobe.

7. A high pressure switch on the blower shall shut off the blower and the collector well pumps and shall be indicated by a red light on the control panel and shall activate the alarm strobe.

8. A remote hand switch on the control panel shall control the operation of the blower. A red light shall indicate the blower is not running. A green light shall indicate the blower is running.

9. A high-high level in the air stripper sump shall shut off the collector well pumps and shall be indicated by a red light on the control panel.

10. A high level in the treatment pad sump shall start the treatment pad sump pump. A low level in the sump shall stop the treatment pad sump pump.

11. A remote hand switch on the control panel shall control operation of the treatment pad sump pump. A red light shall indicate the pump is not running. A green light shall indicate the pump is running.

Potential Equipment and Instrumentation

12. A high level in the air stripper sump shall start the air stripper transfer pump. A low level in the air stripper sump shall stop the air stripper transfer pump.

13. A remote hand switch on the control panel shall control operation of the air stripper transfer pump. A red light shall indicate the pump is not running. A green light shall indicate the pump is running.

14. A high pressure at the air stripper transfer pump discharge shall shut of the air stripper transfer pump and shall be indicated by a red light on the control panel.

15. A high level in an effluent tank shall close the respective tank inlet solenoid valve and shall be indicated by a red light on the control panel. A low level in an effluent tank shall open the respective tank inlet solenoid valve.

16. A green light (XA-01 or AX-03) shall indicate if the respective tank inlet solenoid valve is open.

17. A timer shall control the tank effluent solenoid valve. The timer shall be set to allow discharge to POTW based on an agreement with POTW.

18. A green light (XA-02 or XA-04) shall indicate if the respective tank effluent solenoid valve is open.

19. A high level in both effluent tanks will shut off the air stripper transfer pump.

# 7.0 CONTROL PANEL REQUIREMENTS

**Table A.7-1**
**Control Panel**

Performance Specification
Site 6, Fire-Fighting Training Area
Naval Construction Battalion Center Gulfport
Gulfport, Mississippi

| Equipment Name | Instrument | Panel Indication | Panel Indication |
|---|---|---|---|
| Collector Well No. 1 | LAH/L | Red (high level) | Green (low level) |
| Collector Well No. 2 | LAH/L | Red (high level) | Green (low level) |
| Collector Well No. 3 | LAH/L | Red (high level) | Green (low level) |
| P-01 | HOA | Red (not running) | Green (running) |
| P-02 | HOA | Red (not running) | Green (running) |
| P-03 | HOA | Red (not running) | Green (running) |
| P-04 | HOA | Red (not running) | Green (running) |
| T-01 | LAH | Red (high level) | |
| T-01 | LAHH | Red (high-high level) | |
| B-01 | HOA | Red (not running) | Green (running) |
| B-01 | PAHH | Red (high pressure) | |
| S-02 | LAHH | Red (high-high level) | |
| P-06 | HOA | Red (not running) | Green (running) |
| All | PB-01 | To acknowledge and shut off strobe, only instrument to be accessible from outside of fence | |
| **Potential Equipment and Instrumentation** | | | |
| P-05 | HOA | Red (not running) | Green (running) |
| P-05 | PAHH | Red (high pressure) | |
| T-02 | LAH | Red (high level) | |
| T-03 | LAH | Red (high level) | |
| T-02 | XA-01 | Green (open) | |
| T-03 | XA-03 | Green (open) | |
| T-02 | XA-02 | Green (open) | |
| T-03 | XA-04 | Green (open) | |

# APPENDIX B

# APPENDIX B

## SCREEN COMPUTER MODEL DOCUMENTATION AND REQUIREMENTS FOR CONSTRUCTION PERMIT, AND ASSOCIATED REGULATIONS

## TABLE OF CONTENTS FOR APPENDIX B


| Title of Section | Page No. |
|---|---|
| Air Emission Regulations for the Prevention, Abatement, and Control of Air Contaminants | B-7 |
| Permit Regulations for the Construction and/or Operation of Air Emissions Equipment | B-25 |
| Ambient Air Quality Standards | B-45 |
| Application for Air Pollution Control Permit to Construct and/or Operate Air Emissions Equipment | B-47 |
| Regulations for the Prevention of Significant Deterioration of Air Quality | B-95 |

*** SCREEN-1.1 MODEL RUN ***
*** VERSION DATED 88300 ***

FPORT - SITE 6

SIMPLE TERRAIN INPUTS:

| | | |
|---|---|---|
| SOURCE TYPE | = | POINT |
| EMISSION RATE (G/S) | = | 1.000 |
| STACK HEIGHT (M) | = | 7.92 |
| STK INSIDE DIAM (M) | = | .20 |
| STK EXIT VELOCITY (M/S) | = | 9.02 |
| STK GAS EXIT TEMP (K) | = | 293.00 |
| AMBIENT AIR TEMP (K) | = | 293.00 |
| RECEPTOR HEIGHT (M) | = | .00 |
| IOPT (1=URB,2=RUR) | = | 2 |
| BUILDING HEIGHT (M) | = | 4.27 |
| MIN HORIZ BLDG DIM (M) | = | 2.44 |
| MAX HORIZ BLDG DIM (M) | = | 10.36 |

BUOY. FLUX = .00 M**4/S**3; MOM. FLUX = .81 M**4/S**2.

*** FULL METEOROLOGY ***

**********
*** SCREEN AUTOMATED DISTANCES ***
**********

TERRAIN HEIGHT OF 0. M ABOVE STACK BASE USED FOR FOLLOWING DISTANCES ***

| DIST (M) | CONC (UG/M**3) | STAB | U10M (M/S) | USTK (M/S) | MIX HT (M) | PLUME HT (M) | SIGMA Y (M) | SIGMA Z (M) | DWASH |
|---|---|---|---|---|---|---|---|---|---|
| 1. | .0000 | 0 | .0 | .0 | .0 | .0 | .0 | .0 | NA |
| 100. | 1344. | 6 | 2.0 | 2.0 | 5000.0 | 10.6 | 4.1 | 6.0 | HS |
| 200. | 989.5 | 6 | 2.0 | 2.0 | 5000.0 | 10.6 | 7.8 | 7.4 | HS |
| 300. | 772.4 | 6 | 2.0 | 2.0 | 5000.0 | 10.6 | 11.3 | 8.7 | HS |
| 400. | 712.2 | 6 | 1.0 | 1.0 | 5000.0 | 12.2 | 14.7 | 7.2 | NO |
| 500. | 740.6 | 6 | 1.0 | 1.0 | 5000.0 | 12.2 | 18.0 | 8.5 | NO |
| 600. | 700.3 | 6 | 1.0 | 1.0 | 5000.0 | 12.2 | 21.3 | 9.8 | NO |
| 700. | 636.8 | 6 | 1.0 | 1.0 | 5000.0 | 12.2 | 24.5 | 11.0 | NO |
| 800. | 570.1 | 6 | 1.0 | 1.0 | 5000.0 | 12.2 | 27.7 | 12.1 | NO |
| 900. | 510.0 | 6 | 1.0 | 1.0 | 5000.0 | 12.2 | 30.8 | 13.1 | NO |
| 1000. | 457.3 | 6 | 1.0 | 1.0 | 5000.0 | 12.2 | 33.9 | 14.0 | NO |

MAXIMUM 1-HR CONCENTRATION AT OR BEYOND 1. M:

| | | | | | | | | | |
|---|---|---|---|---|---|---|---|---|---|
| 43. | 1870. | 6 | 2.0 | 2.0 | 5000.0 | 10.6 | 2.0 | 5.2 | HS |

DWASH= MEANS NO CALC MADE (CONC = 0.0)
DWASH=NO MEANS NO BUILDING DOWNWASH USED
DWASH=HS MEANS HUBER-SNYDER DOWNWASH USED
DWASH=SS MEANS SCHULMAN-SCIRE DOWNWASH USED
DWASH=NA MEANS DOWNWASH NOT APPLICABLE, X<3*LB

**********
* SUMMARY OF TERRAIN HEIGHTS ENTERED FOR *
* SIMPLE ELEVATED TERRAIN PROCEDURE *
**********

| TERRAIN HT (M) | DISTANCE RANGE (M) MINIMUM | MAXIMUM |
|---|---|---|
| 0. | 1. | 1000. |

```
*** CAVITY CALCULATION - 1 ***
 CONC (UG/M**3)       =    .0000
 CRIT WS @10M (M/S)   =   99.99
 CRIT WS @ HS (M/S)   =   99.99
 DILUTION WS (M/S)    =   99.99
 CAVITY HT (M)        =    7.52
 CAVITY LENGTH (M)    =   16.67
 ALONGWIND DIM (M)    =    2.44

*** CAVITY CALCULATION - 2 ***
 CONC (UG/M**3)       =    .0000
 CRIT WS @10M (M/S)   =   99.99
 CRIT WS @ HS (M/S)   =   99.99
 DILUTION WS (M/S)    =   99.99
 CAVITY HT (M)        =    4.56
 CAVITY LENGTH (M)    =    3.74
 ALONGWIND DIM (M)    =   10.36

CAVITY CONC NOT CALCULATED FOR CRIT WS > 20.0 M/S.  CONC SET = 0.0
```

```
*************************************
*** SUMMARY OF SCREEN MODEL RESULTS ***
*************************************
```

| CALCULATION PROCEDURE | MAX CONC (UG/M**3) | DIST TO MAX (M) | TERRAIN HT (M) |
|---|---|---|---|
| SIMPLE TERRAIN | 1870. | 43. | 0. |

```
****************************************************
** REMEMBER TO INCLUDE BACKGROUND CONCENTRATIONS **
****************************************************
```

| PROJECT | COMP. BY | JOB NO. |
|---|---|---|
| GULFPORT - SITE G | | 8505.70 |
| | CHK. BY | DATE 8-2-94 |

INPUT PARAMETERS TO SCREEN MODEL:

1) STACK HEIGHT FOLLOWING GEP =
1.5 times lesser of height or width of nearby structure plus height of nearby structure

NEARBY STRUCTURE = EFFLUENT TANKS (8'W × 36'L × 14'H)

$1.5(8') + 14' = 12 + 14 = 26'$

$26\ FT \times 0.3048\ M/FT = 7.92\ M$ = STACK HEIGHT

2) STACK INSIDE D = $8''/12''/FT \times 0.3048\ M/FT = 0.20M$

3) STACK EXIT VELOCITY = 600 $FT^3/MIN$

STACK AREA = $\frac{(0.2M)^2}{4}\pi = 0.0314\ M^2$

$= \frac{(8/12)^2}{4}\pi = 0.35\ FT^2$

$\frac{600\ FT^3/MIN}{0.0314\ M^2} \times \frac{MIN}{60\ SEC} \times .02832\ \frac{M^3}{FT^3} = 9.02\ M/S$

4) NEAREST BLDG - EFFLUENT TANKS
- Assume Water Tanks

14' H = 4.27 M

8' W = 2.44 M

34' L = 10.36 M

WITH 25 gpm (3.3 cfm) AND AIR FLOW RATE OF 600 CFM, THE AIR TO WATER RATIO FOR THE SYSTEM IS 180:1.

TABLE 2-1
DESIGN CALCULATIONS

Project Name: GULFPORT

ABB-ES Project No.: 8505-70
Designed By: V. RULE
Date: 8/2/94
Checked By:
Date:

ABB Environmental Services
1400 Centerpoint Blvd
Knoxville, TN 37932

## AIR STRIPPING EVALUATION WORKSHEET

Source Identification: Site 6
Source Location: Gulfport

Max. Influent Flow Rate (GPM) : 25
Max. Air Flow Rate (CFM) : 600
Emission Pt. Height (St. Height){ft} : 26
Max. Hrs. of Operation (hrs/wk) : 168

| # | Contaminant Name | Max Conc (ppb) | Max. Emission Rate (lb/hr) | Max. Emission Rate (g/s) | Max. Conc. @ Pt. (mg/m3) | Max. 8 hr Conc. @ Pt. (mg/m3) | TLV (mg/m3) |
|---|---|---|---|---|---|---|---|
| 1 | Benzene | 83 | 0.00104 | 0.00013 | 0.00024 | 0.00017 | 3 |
| 2 | 2-Butanone (MEK) | 80 | 0.00100 | 0.00013 | 0.00024 | 0.00017 | 590 |
| 3 | Chloroethane | 310 | 0.00388 | 0.00049 | 0.00091 | 0.00064 | 2640 |
| 4 | Chloroform | 20 | 0.00025 | 0.00003 | 0.00006 | 0.00004 | 49 |
| 5 | Chloromethane | 12 | 0.00015 | 0.00002 | 0.00004 | 0.00002 | |
| 6 | 1,1-Dichloroethane | 4900 | 0.06133 | 0.00773 | 0.01445 | 0.01012 | 405 |
| 7 | 1,2-Dichloroethane | 1200 | 0.01502 | 0.00189 | 0.00354 | 0.00248 | 40 |
| 8 | 1,1-Dichloroethene | 3100 | 0.03880 | 0.00489 | 0.00914 | 0.00640 | 20 |
| 9 | 1,2-Dichloroethene (total) | 170 | 0.00213 | 0.00027 | 0.00050 | 0.00035 | 790 |
| 10 | Ethylbenzene | 77 | 0.00096 | 0.00012 | 0.00023 | 0.00016 | 434 |
| 11 | Methylene Chloride | 95 | 0.00119 | 0.00015 | 0.00028 | 0.00020 | 174 |
| 12 | 4-Methyl-2-Pentanone | 100 | 0.00125 | 0.00016 | 0.00029 | 0.00021 | |
| 13 | Tetrachloroethene | 32 | 0.00040 | 0.00005 | 0.00009 | 0.00007 | 170 |
| 14 | Toluene | 340 | 0.00426 | 0.00054 | 0.00100 | 0.00070 | 188 |
| 15 | 1,1,1-Trichloroethane | 5900 | 0.07385 | 0.00930 | 0.01740 | 0.01218 | 1910 |
| 16 | Trichloroethene | 90 | 0.00113 | 0.00014 | 0.00027 | 0.00019 | 269 |
| 17 | Vinyl chloride | 35 | 0.00044 | 0.00006 | 0.00010 | 0.00007 | 13 |
| 18 | Xylene (Total) | 490 | 0.00613 | 0.00077 | 0.00145 | 0.00101 | 434 |

TABLE 1
DESIGN CALCULATIONS

Project Name: GULFPORT

ABB-ES Project No.: 8505-70
Designed By: V. RULE
Date: 7/6/94
Checked By:
Date:

## AIR STRIPPING EVALUATION WORKSHEET

Source Identification: Site 6
Source Location: Gulfport

| # | Contaminant Name | Max Conc (ppb) | Max. Emission Rate (lb/hr) | Max. Conc. (mg/m3) | LEL (%) |
|---|---|---|---|---|---|
| 1 | Benzene | 83 | 0.00104 | 0.46220 | 1.30 |
| 2 | 2-Butanone (MEK) | 80 | 0.00100 | 0.44549 | 1.40 |
| 3 | Chloroethane | 310 | 0.00388 | 1.72629 | -- |
| 4 | Chloroform | 20 | 0.00025 | 0.11137 | NA |
| 5 | Chloromethane | 12 | 0.00015 | 0.06682 | -- |
| 6 | 1,1-Dichloroethane | 4900 | 0.06133 | 27.28654 | 5.60 |
| 7 | 1,2-Dichloroethane | 1200 | 0.01502 | 6.68242 | -- |
| 8 | 1,1-Dichloroethene | 3100 | 0.03880 | 17.26291 | -- |
| 9 | 1,2-Dichloroethene (total) | 170 | 0.00213 | 0.94668 | 5.60 |
| 10 | Ethylbenzene | 77 | 0.00096 | 0.42879 | 1.00 |
| 11 | Methylene Chloride | 95 | 0.00119 | 0.52902 | 14.00 |
| 12 | 4-Methyl-2-Pentanone | 100 | 0.00125 | 0.55687 | NA |
| 13 | Tetrachloroethene | 32 | 0.00040 | 0.17820 | -- |
| 14 | Toluene | 340 | 0.00426 | 1.89335 | 1.20 |
| 15 | 1,1,1-Trichloroethane | 5900 | 0.07385 | 32.85522 | -- |
| 16 | Trichloroethene | 90 | 0.00113 | 0.50118 | 8.00 |
| 17 | Vinyl chloride | 35 | 0.00044 | 0.19490 | 3.60 |
| 18 | Xylene (Total) | 490 | 0.00613 | 2.72865 | 1.00 |

If maximum ambient impact is greater than acceptable ambient impact, this implies that the design is not adequate.

0.21321 lb/hr
0.93385 tons/yr

Per_Spe.GLP
mlv.11.94

THIS PAGE INTENTIONALLY LEFT BLANK.

# AIR EMISSION REGULATIONS FOR THE PREVENTION, ABATEMENT, AND CONTROL OF AIR CONTAMINANTS

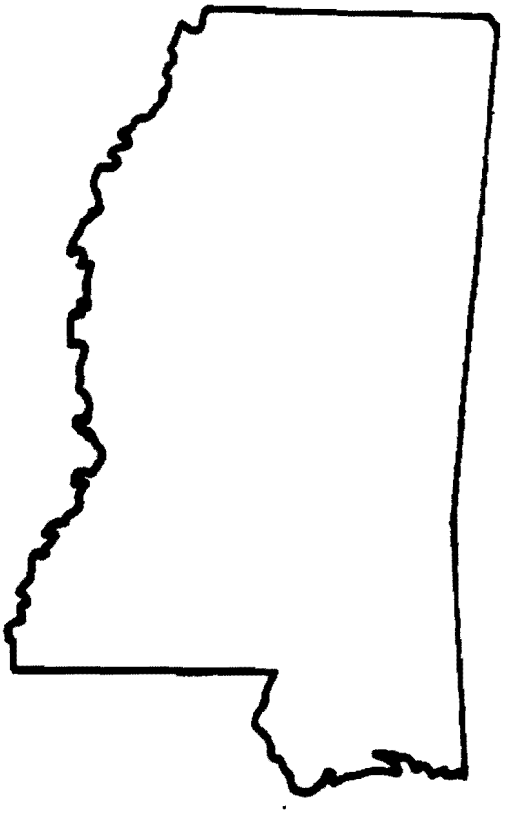

# STATE OF MISSISSIPPI


**MISSISSIPPI DEPARTMENT OF ENVIRONMENTAL QUALITY**
**OFFICE OF POLLUTION CONTROL**
**P. O. Box 10385**
**Jackson, Mississippi 39289-0385**


**REGULATION APC-S-1**
**Amended December 9, 1993**

MISSISSIPPI COMMISSION ON ENVIRONMENTAL QUALITY

# AIR EMISSION REGULATIONS FOR THE PREVENTION, ABATEMENT, AND CONTROL OF AIR CONTAMINANTS

APC-S-1

Amended December 9, 1993

## SECTION 1. GENERAL

1. Authority. Pursuant to the authority granted by Miss. Code Ann. § 49-17-17, the following regulations are adopted for the purpose of preventing, abating, and controlling air pollution caused by air contaminants being discharged into the atmosphere as particulates, smoke, fly ash, solvents, and other chemicals or combinations thereof.

2. Except as otherwise noted herein, stack emissions testing for demonstration of compliance with the regulations herein shall be performed in accordance with the Test Methods of the U. S. Environmental Protection Agency in place at the time testing is performed unless otherwise approved by the staff of the Mississippi Office of Pollution Control and the U. S. Environmental Protection Agency.

3. In the event of a conflict between any of the requirements of these regulations and/or applicable requirements of any other regulation or law, the more stringent requirements shall be applied.

## SECTION 2. DEFINITIONS

The terms used in the regulations shall, unless the context otherwise requires, have the following meanings:

1. "Air cleaning device." Any method, process or equipment which removes, reduces or renders less noxious air contaminants discharged into the atmosphere.

2. "Air contaminant." Particulate matter, dust, fumes, gas, mist, smoke, or vapor, or any combination thereof produced by processes other than natural.

3. "Air contamination." The presence in the outdoor ambient air of one or more air contaminants which contribute to a condition of air pollution.

4. "Air contamination source." Any source at, from, or by reason of which there is emitted into the ambient air any air contaminant, regardless of who the person may be who owns or operates the building, premises, or other property in, at, or on which such source is located, or the facility, equipment or other property by which the emission is caused or from which the emission comes.

5. "Air contaminant point source." Any single point of emissions of any air contaminant such as from an individual machine or combustion device.

6. "Air pollution." The presence in the outdoor ambient air of one or more air contaminants in quantities, of characteristic, and of a duration which are materially injurious or can be reasonably expected to become materially injurious to human, plant, or animal life or to property, or which unreasonably interfere with enjoyment of life or use of property throughout the State or throughout such area of the State as shall be affected thereby.

7. "Ambient air." The encompassing atmosphere existing in the matter of space and to which life of this earth is adapted. For the purposes of these regulations, that portion of the atmosphere outside of buildings, stacks, and ducts.

8. "Atmosphere." The air that envelopes or surrounds the earth. This term is synonymous with ambient air.

9. "Commission." The Mississippi Commission on Environmental Quality.

10. "Excess (or excessive) emission." The operation of a facility in which the emission of one or more pollutants exceeds the applicable limit(s).

11. "Fly ash." Particulate matter capable of being gasborne or airborne or carried in the gas stream and consisting essentially of ash, fused ash, and/or unburned material.

12. "Ground level." Unless otherwise specified in sampling techniques, will be considered to be in the range of one to twenty (20) feet of ground level. For ambient sampling, it shall also be outside the boundaries of the property which contains the air pollution source.

13. "Incinerator." A combustion device specifically designed for the destruction by high temperature burning of solid, semi-solid, liquid or gaseous combustible wastes and from which the solid residues contain little or no combustibles.

14. "Modification." Any physical change in, or change in the method of operation of, an affected facility which increases the amount of any air pollutant emitted by such facility or which results in the emission of any air pollutant not previously emitted, except that:

    (1) Routine maintenance, repair and replacement shall not be considered physical changes, and

    (2) An increase in the production rate or hours of operation shall not be considered a change in the method of operation, unless it is prohibited by a permit.

15. "Multiple chamber incinerator." Any article, machine, equipment, contrivance, structure, or any part thereof used to dispose of combustible refuse by burning, which consists of three or more refractory walls, interconnected by gas passage points or ducts and employing adequate design parameters necessary for maximum combustion of the material to be burned.

16. "Opacity." The degree to which emissions reduce the transmission of light and obscure the background.

17. "Open burning." The combustion of solid waste without (1) control of combustion air to maintain adequate temperature for efficient combustion, (2) containment of the combustion reaction in an enclosed device to provide sufficient residence time and mixing for complete combustion, and (3) control of the emission of the combustion products.

18. "Particulate matter." Any airborne finely divided solid or liquid material with an aerodynamic diameter smaller than 100 micrometers.

19. "Particulate matter emissions." All finely divided solid or liquid material, other than uncombined water, emitted to the ambient air as measured by an applicable EPA Test Method, an equivalent or alternative method specified by the EPA, or by a test method specified in the approved State Implementation Plan.

20. "Person." The State or other agency, or institution thereof, any municipality, political subdivision, public or private corporation, individual, partnership, association, or other entity, and includes any officer or governing or managing body of any municipality, political subdivision, or public or private corporation, or the United States or any officer or employee thereof.

21. "$PM_{10}$." Particulate matter with an aerodynamic diameter less than or equal to a nominal 10 micrometers as measured by a reference method based on Appendix J of 40 CFR 50 and designated in accordance with 40 CFR 53 or by an equivalent method designated in accordance with 40 CFR Part 53.

22. "$PM_{10}$ emissions." Finely divided solid or liquid material, with an aerodynamic diameter less than or equal to a nominal 10 micrometers, emitted to the ambient air as measured by an applicable EPA Test Method, an equivalent or alternate method specified by the EPA, or by a test method specified in the approved State Implementation Plan.

23. "Process weight." The total weight of all materials introduced into a source operation including solid fuels and water. Excluded materials are as follows: Liquids and gases used solely as fuels or as a means of conveyance, liquids used as a pollutant removal medium, recycled process materials counted at initial introduction, and air introduced for purposes of combustion.

24. "Recreational area." Recreational area means:

    a. a national, state, county, or city designated park; or

    b. an outdoor recreational area, such as a golf course or swimming pool, owned by a city, county, or other public agency.

25. "Residential area." Residential area means:

    a. a group of 20 or more single family dwelling units on contiguous property and having an average density of two or more units per acre, or

    b. a group of 40 or more single family dwelling units on contiguous property and having an average density of one or more units per acre, or

    c. a subdivision containing at least 20 constructed houses, in which the subdivision plat is recorded in the chancery clerk's office of the appropriate county.

26. "Shutdown." The termination of operation of equipment. Relative to fuel-burning equipment, a shutdown shall be construed to occur only when a unit is taken from a fired to a non-fired state.

27. "Smoke." Small gasborne particles resulting from incomplete combustion and consisting predominantly, but not exclusively, of carbon, ash, and other combustible material.

28. "Soot." Aggregated particles consisting mainly of carbonaceous material.

29. "Soot blowing." The removal by mechanical means of accumulated carbon and/or ash from heat transfer surfaces of an operating fuel-burning unit.

30. "Standard conditions." Standard conditions for gas measurement and calculation will be a temperature of 60 degrees Fahrenheit and a pressure of 14.7 pounds per square inch absolute except where set by Applicable Rules and Regulations.

31. "Startup." The bringing into operation from a non-operative condition. Relative to fuel-burning equipment, a startup shall be construed to occur only when a unit is taken from a non-fired to a fired state.

32. "Total reduced sulfur, (TRS)" means hydrogen sulfide, mercaptans, dimethyl sulfide, and any other organic sulfides present.

33. "Total suspended particulate." Particulate matter as measured by the method described in Appendix B of 40 CFR 50.

34. "Upset." An unexpected and unplanned condition of operation of the facility in which equipment operates outside of the normal and planned parameters. An upset shall not include a condition of

operation caused by improperly designed equipment, lack of preventive maintenance, careless or improper operation, operator error, or an intentional startup or shutdown of equipment.

## SECTION 3. SPECIFIC CRITERIA FOR SOURCES OF PARTICULATE MATTER

1. Smoke

   (a) No person shall cause, permit, or allow the emission of smoke from a point source into the open air from any manufacturing, industrial, commercial or waste disposal process which exceeds forty (40) percent opacity subject to the exceptions provided in (b) & (c).

   (b) Startup operations may produce emissions which exceed 40% opacity for up to fifteen (15) minutes per startup in any one hour and not to exceed three (3) startups per stack in any twenty-four (24) hour period.

   (c) Emissions resulting from soot blowing operations shall be permitted provided such emissions do not exceed 60 percent opacity, and provided further that the aggregate duration of such emissions during any twenty-four (24) hour period does not exceed ten (10) minutes per billion BTU gross heating value of fuel in any one hour.

2. Equivalent Opacity. No person shall cause, allow, or permit the discharge into the ambient air from any point source or emissions, any air contaminant of such opacity as to obscure an observer's view to a degree in excess of 40% opacity, equivalent to that provided in Section 3.1(a). This shall not apply to vision obscuration caused by uncombined water droplets.

3. General Nuisances. No person shall cause, permit, or allow the emission of particles, or any contaminants in sufficient amounts or of such duration from any process as to be injurious to humans, animals, plants, or property, or to be a public nuisance, or create a condition of air pollution.

   (a) No person shall cause or permit the handling or transporting or storage of any material in a manner which allows or may allow unnecessary amounts of particulate matter to become airborne.

   (b) When dust, fumes, gases, mist, odorous matter, vapors, or any combination thereof escape from a building or equipment in such a manner and amount as to cause a nuisance to property other than that from which it originated or to violate any other provision of this regulation, the Commission may order such corrected in a way that all air and gases or air and gasborne material leaving the building or equipment are controlled or removed prior to discharge to the open air.

4. Fuel Burning

   (a) Fossil Fuel Burning. The maximum permissible emission of ash and/or particulate matter from fossil fuel burning installations shall be limited as follows:

      (1) Emissions from installations of less than 10 million BTU per hour heat input shall not exceed 0.6 pounds per million BTU per hour heat input.

      (2) Emissions from installations equal to or greater than 10 million BTU per hour heat input but less than 10,000 million BTU per hour heat input shall not exceed an emission rate as determined by the relationship

      $$E = 0.8808 * I^{-0.1667}$$

      where E is the emission rate in pounds per million BTU per hour heat input and I is the heat input in millions of BTU per hour.

(3) Emissions from installations equal to or greater than 10,000 million BTU per hour heat input shall not exceed 0.19 pounds per million BTU per hour heat input.

(b) Combination Boilers. Fuel burning operations utilizing a mixture of combustibles such as, but not limited to, fossil fuels plus bark, oil plus bark, or spent wood, or water treatment by-products sludge, may be allowed emission rates up to 0.30 grains per standard dry cubic foot.

5. Kraft Process Recovery Boilers. The emissions of particulate matter from a recovery furnace stack shall not exceed four (4) pounds per ton of equivalent air-dried Kraft pulp produced at any given time.

6. Manufacturing Processes.

(a) General. Except as otherwise specified, no person shall cause, permit, or allow the emission from any manufacturing process, in any one hour from any point source, particulate matter in total quantities in excess of the amount determined by the relationship

$$E = 4.1\ p^{0.67}$$

where E is the emission rate in pounds per hour and p is the process weight input rate in tons per hour.

Conveyor discharge of coarse solid matter may be allowed if no nuisance is created beyond the property boundary where the discharge occurs.

(b) Kraft Pulping Mills. All mills existing prior to January 25, 1972, and not modified subsequent thereto shall comply with the following emission limits:

(1) Recovery Furnaces. The emission of particulate matter from recovery furnace stacks shall not exceed four pounds per ton of equivalent air-dried Kraft pulp.

(2) Lime Kilns. The emission of particulate matter from lime kilns shall not exceed one pound per ton of equivalent air-dried Kraft pulp.

(3) Smelt Tanks. The emission of particulate matter from smelt tanks shall not exceed one-half pound per ton of equivalent air-dried Kraft pulp.

7. Open Burning. The open burning of residential, commercial, institutional, or industrial solid waste, is prohibited. This prohibition does not apply to infrequent burning of agricultural wastes in the field, silvicultural wastes for forest management purposes, land-clearing debris, debris from emergency clean-up operations, and ordnance.

(a) Fires set for the burning of agricultural wastes in the field and/or silvicultural wastes for forest management purposes must meet the following conditions.

(1) A Permit must be obtained from the Mississippi Forestry Commission when there is a Forestry Commission tower serving the area in which the burning occurs.

(2) The open burning must occur within a time period allowing adequate diffusion of air pollutants as defined by the permit and the daily weather guides issued by the National Weather Forecast Office.

(3) Starter or auxiliary fuels may consist of dried vegetation, petroleum derived fuels of the gasoline, kerosene, or light fuel oil types (diesel), or a combination thereof. Use of or burning of other combustible material that causes excessive visible emission (e.g., rubber tires, plastic materials, etc.) is prohibited.

(b) Open burning of land-clearing debris must not use starter or auxiliary fuels which cause excessive smoke (rubber tires, plastics, etc.); must not be performed if prohibited by local ordinances; must not cause a traffic hazard; must not take place where there is a High Fire Danger Alert declared by the Mississippi Forestry Commission or Emergency Air Pollution Episode Alert imposed by the Executive Director and must meet the following buffer zones.

(1) Open burning without a forced-draft air system must not occur within 500 yards of an occupied dwelling.

(2) Open burning utilizing a forced-draft air system on all fires to improve the combustion rate and reduce smoke may be done within 500 yards of but not within 50 yards of an occupied dwelling.

(3) Burning must not occur within 500 yards of commercial airport property, private air fields, or marked off-runway aircraft approach corridors unless written approval to conduct burning is secured from the proper airport authority, owner or operator.

8. Incineration.

(a) The maximum discharge of particulate matter from any incinerator, except those specified in paragraph (b) of this section, or those specified in Section 6.4, shall not exceed 0.2 grains per standard dry cubic foot of flue gas calculated to twelve percent (12%) carbon dioxide by volume for products of combustion. This limitation shall apply when the incinerator is operating at design capacity.

The carbon dioxide produced by combustion of any auxiliary fuels shall be excluded from the calculation to twelve percent (12%) carbon dioxide. After May 8, 1970, any new equipment shall be of the multiple chamber type or its equivalent for emission control. In critical areas where an installation is in close proximity to a residential area, an incinerator, except those specified in paragraph (b) of this section, or those specified in Section 6.4, shall be limited to emissions of 0.1 grains per standard dry cubic foot of flue gases calculated to twelve percent (12%) carbon dioxide by volume for products of combustion.

(b) The maximum discharge of smoke from the incineration of waste material resulting totally from the ginning of cotton shall not obscure an observer's view to a degree in excess of 40% opacity.

Start-up operations may produce emissions which exceed 40% opacity for up to fifteen minutes per start-up in any one hour not to exceed three (3) start-ups in any twenty-four (24) hour period.

After July 1, 1994, the emission limitation specified in paragraph (a) of this section shall also be applicable to cotton gin waste incinerators.

9. Sampling Ports.

(a) New Equipment: The owner or operator of any new air pollution control equipment, obtained after May 8, 1970, and vented to the atmosphere, shall have necessary sampling ports and ease of accessibility.

(b) Existing Equipment: The owner or operator of air pollution control equipment that is in existence prior to May 8, 1970, shall provide the necessary sampling ports and ease of accessibility when deemed necessary by the Permit Board.

10. More Restrictive Emission Limits. The Commission reserves the right to prescribe more stringent emission limits as it deems necessary in problem areas. The expansion, alteration, or establishment of a new industry may also result in the prescription of more stringent emission limits.

## SECTION 4. SPECIFIC CRITERIA FOR SOURCES OF SULFUR COMPOUNDS

1. Sulfur Dioxide Emissions from Fuel Burning

(a) The maximum discharge of sulfur oxides from any fuel burning installation in which the fuel is burned primarily to produce heat or power by indirect heat transfer shall not exceed 4.8 pounds (measured as sulfur dioxide) per million BTU heat input.

(b) No person shall cause or permit the burning of fuel in any fuel burning equipment that results in an average emission of sulfur dioxide from any calendar year at a rate greater than was emitted by said fuel burning equipment for the corresponding calendar year 1970 unless otherwise authorized by the Commission. Installations under construction on January 25, 1972, are excluded from this requirement.

(c) The maximum discharge of sulfur dioxide from any modified fuel burning unit whose generation capacity is less than 250 million BTU per hour and in which the fuel is burned primarily to produce heat or power by indirect heat transfer shall not exceed 2.4 pounds (measured as sulfur dioxide) per million BTU heat input. For the purposes of Section 4 of these regulations only, "modification" shall mean any physical change in an Air Contaminant Source which increases the amount of any air pollutant (to which a standard applies) emitted by such source or which results in the emission of any air pollutant (to which a standard applies) not previously emitted.

2. Sulfur Dioxide Emissions from Processes

(a) Except as otherwise provided herein, no person shall cause or permit the emission of gas containing sulfur oxides (measured as sulfur dioxide) in excess of 2,000 ppm (volume) from any existing process equipment, or in excess of 500 ppm (volume) from any new process equipment. The 500 ppm (volume) requirement shall apply for new equipment unless otherwise provided by the Commission.

(b) Except as otherwise provided in paragraph 2(f)(1), no person shall cause or permit the emission of any gas stream which contains hydrogen sulfide in excess of one grain per 100 standard cubic feet.

Gas streams containing hydrogen sulfide in excess of one grain per 100 standard cubic feet shall be incinerated at temperatures of not less than 1600°F for a period of not less than 0.5 seconds, or processed in such manner which is equivalent to or more effective for the removal of hydrogen sulfide.

Sulfur dioxide concentration limitations in the gas streams resulting from such incineration or processing shall be determined for each emission point on a case-by-case basis to insure that the resulting maximum ground level concentration of sulfur dioxide as determined by acceptable method or methods will be in compliance with the National Ambient Air Quality Standards for sulfur dioxide. Testing to determine the productive capacity of new fields shall be exempted from emission limitation provisions of the paragraph of the regulation providing such testing has been previously negotiated and approved by the Mississippi Office of Pollution Control.

This regulation shall not apply to sulfur recovery plants.

(c) No person shall cause or permit acid mist emissions from sulfuric acid manufacturing plants to exceed 0.5 pounds/ton of acid produced. Sulfur trioxide emissions from sulfuric acid manufacturing plants shall not exceed 0.2 pounds/ton of acid produced.

(d) No person shall cause or permit emission of sulfur oxides, calculated as sulfur dioxide, from a sulfur recovery plant to exceed 0.12 pounds per pound of sulfur processed.

(e) No person shall cause or permit emissions of sulfur oxides, calculated as sulfur dioxide, from primary nonferrous smelters, in excess of the emission calculated as follows:

Copper smelters: $Y = 0.2X$
Zinc smelters: $Y = 0.564X^{0.85}$
Lead smelters: $Y = 0.98X^{0.77}$

Where X is the total sulfur fed to the smelter in pounds/hour and Y is the allowable sulfur emissions in pounds/hour.

(f) Kraft Pulp Mills

1. All mills existing prior to November 1, 1987, and not modified subsequent thereto, excluding mills or facilities subject to New Source Performance Standards, shall control the emission of total reduced sulfur compounds (TRS) so as to not exceed the emission limits set forth below:

   a. Straight recovery boiler systems - twenty (20) parts per million TRS, expressed as hydrogen sulfide on a dry gas basis corrected to 8% oxygen, on a 12-hour average basis, except that:

      i. the International Paper Company, Vicksburg, Mississippi, shall be allowed 40 parts per million TRS, expressed as hydrogen sulfide on a dry gas basis corrected to 8% oxygen, on a 12-hour average basis,

      ii. the International Paper Company, Natchez, Mississippi, Recovery Boilers 4 & 5, shall be allowed 40 parts per million TRS, expressed as hydrogen sulfide on a dry gas basis corrected to 8% oxygen, on a 12-hour average basis, and

      iii. the Georgia-Pacific Corporation, Monticello, Mississippi, shall be allowed 40 parts per million TRS, expressed as hydrogen sulfide on a dry gas basis corrected to 8% oxygen, on a 12-hour average basis.

   b. Lime kiln systems - twenty (20) parts per million of TRS, expressed as hydrogen sulfide on a dry gas basis corrected to 10% oxygen, on a 12-hour average basis.

   c. Digester systems - five (5) parts per million of TRS, expressed as hydrogen sulfide on a dry gas basis corrected to 10% oxygen, on a 12-hour average basis.

   d. Multiple effect evaporator systems - five (5) parts per million of TRS, expressed as hydrogen sulfide on a dry gas basis corrected to 10% oxygen, on a 12-hour average basis.

   e. Condensate stripper systems - five (5) parts per million of TRS, expressed as hydrogen sulfide on a dry gas basis corrected to 10% oxygen, on a 12-hour average basis.

   f. Smelt dissolving tank - 0.016 gram of TRS, expressed as hydrogen sulfide on a dry gas basis, per kilogram of black liquor solids (dry weight).

   g. Equivalent control systems (controls for treating collected noncondensible gases in a manner equivalent to incineration in a lime kiln) - five (5) parts per million TRS, expressed as hydrogen sulfide on a dry gas basis, corrected to the actual oxygen content of the untreated gas stream, on a 12-hour average basis.

2. All mills, as defined above, shall, by February 1, 1988, demonstrate compliance with the TRS emission limits set forth above. Compliance demonstration for recovery boilers, lime kilns, smelt tanks, and equivalent control systems for collected noncondensible gases shall be by testing in accordance with EPA Test Method 16 or 16A and submittal of a stack test report. Compliance demonstration for digester systems, multiple effect evaporator systems and condensate stripper systems shall be by certification that these systems are fully connected to a noncondensible gas collection system followed by incineration in the lime kiln or equivalent control and testing of lime kiln or equivalent control as specified above. A compliance schedule may be submitted, as set forth below, on any or all systems not expected to comply with the emission limit and such submittal will negate the requirement for immediate compliance demonstration, as referenced above, on those systems.

   Any mill defined above which, on November 1, 1987, is unable to comply with the emission limits set forth above, shall, within three (3) months thereafter, submit a schedule for attaining compliance with these limits. The compliance schedule shall not extend past November 1, 1990. Compliance with emission limits shall be demonstrated by the methods specified above, as appropriate, no later than the end of the compliance schedule. Compliance demonstration for recovery boilers, lime kilns, smelt tanks, and equivalent control systems for collected noncondensible gases shall be by testing in accordance with EPA Test Method 16 or 16A and submittal of a stack test report. Compliance demonstration for digester systems, multiple effect evaporator systems and condensate stripper systems shall be by certification that these systems are fully connected to a noncondensible gas collection system followed by incineration in the lime kiln or equivalent control and testing of lime kiln or equivalent control as specified above.

3. All mills, as defined above, shall monitor the emission of TRS and/or other gas constituents as described below:

   a. The TRS emission concentration in recovery boiler flue gas shall be monitored by either:

      i. A continuous monitoring device which meets the requirements of 40 CFR 60, Performance Specification 5; or

      ii. Performance of EPA Method 16 or 16A on no less than a (calendar) quarterly basis.

   b. The oxygen concentration in recovery boiler flue gas shall be continuously monitored by a device which meets the requirements of 40 CFR 60, Performance Specification 3.

   c. The TRS concentration in lime kiln flue gas shall be continuously monitored by a device which meets the requirements of 40 CFR 60, Performance Specification 5.

   d. The oxygen concentration in lime kiln flue gas shall be continuously monitored by a device which meets the requirements of 40 CFR 60, Performance Specification 3.

   All mills, as defined above, shall obtain the necessary continuous monitoring equipment and begin monitoring by November 1, 1988, or no later than the date of final compliance with the regulation, if compliance is not immediate. For mills choosing to use EPA Method 16 or 16A for recovery boiler monitoring, the necessary equipment and/or monitoring capability must be obtained by February 1, 1988. Also, when Method 16 or 16A is used, each successive quarter's testing shall be separated from the previous quarter's by a period of not less than sixty (60) days and prior notice to the Mississippi Office of Pollution Control of all testing shall be made.

All mills, as defined above, shall calculate and record, on a daily basis, the 12-hour average TRS concentration and $O_2$ concentration for the two consecutive operating periods of each operating day for both the recovery boiler (if continuously monitored) and lime kiln. Each 12-hour average shall be determined as the arithmetic mean of the appropriate 12 continuous 1-hour average concentrations. Each 12-hour average TRS concentration shall be corrected to 10%, or 8% $O_2$, as appropriate to the emission limit, using the equation defined in 40 CFR 60.284(c)(3).

All mills, as defined above, shall report, for each calendar quarter, the periods of emissions which exceed the TRS limits specified above from the recovery boiler and lime kiln. The report shall specify the 12-hour period of each exceedance by time and date, the average emissions concentration for the period, and total number of 12-hour periods of mill operation during the quarter. The report shall also detail all outages of the monitoring devices by time and date. The report shall be due within forty-five (45) days following the end of the calendar quarter.

## SECTION 5. SPECIFIC CRITERIA FOR SOURCES OF CHEMICAL EMISSIONS

1. Fluorides. No person shall allow the emission of fluorides into the ambient air in excess of four-tenths (0.4) pound per ton of $P_2O_5$ or equivalent. The allowable emission of fluorides shall be calculated by multiplying the unit emission, specified above, times the expressed design production capacity of the installation or plant.

2. Miscellaneous Chemical Emissions. No person shall cause, permit, or allow the emission of toxic, noxious, or deleterious substances, in addition to those considered in these regulations, into the ambient air in concentrations sufficient to affect human health and well-being, or unreasonably interfere with the enjoyment of property or unreasonably and adversely affect plant or animal life beyond the boundaries of the property containing the air pollution source.

## SECTION 6. NEW SOURCES

The provisions of this section apply to the owner or operator of any source listed herein, the construction or modification of which is commenced after the date of adoption of specific emission limitations applicable to such source.

1. Kraft Pulping Mills. All sources shall minimize gaseous and particulate emission by use of modern equipment, devices, maintenance, and operating practices in accordance with best current technology. In no case shall emissions exceed the limits set forth in any applicable Federal Standard of Performance for New Stationary Sources.

2. Other Limitations. The Mississippi Pollution Control Permit Board, in accordance with Commission Regulation APC-S-2, may require more stringent emission limitations which it deems necessary to meet applicable national primary and secondary ambient air quality standards, necessary to insure that ambient air pollution concentrations do not exceed ambient air increments or violate other requirements under Federal Prevention of Significant Deterioration (PSD) regulations promulgated by the U.S. Environmental Protection Agency as of August 23, 1989, pursuant to Section 160 through 169 of the Federal Clean Air Act as amended, or necessary to meet other Federal law or regulations enacted or promulgated subsequent to this regulation.

3. New Source Performance Standards. The Federal New Source Performance Standards are those duly promulgated by the U.S. Environmental Protection Agency in (or to be printed in) 40 C.F.R. Part 60, pursuant to Section 111 of the Federal Clean Air Act, as amended. All such regulations promulgated by the U.S. Environmental Protection Agency as of December 9, 1993, are incorporated herein and adopted by reference by the Commission as official regulations of the State of Mississippi and shall hereafter be enforceable as such (except the word "Administrator" in said standards and general implementing regulations shall be replaced by the words "Executive Director" and the word "Agency" shall be

replaced by the word "Department".) Hereafter, any facility subject to the Federal New Source Performance Standards shall comply with the emission limitations and other requirements of said standards.

4. Infectious Waste Incineration.

a. Infectious waste incinerators which incinerate only those wastes generated on-site and are installed after December 9, 1993, shall comply with the following:

i. The emission of particulate matter shall not exceed 0.08 grains per dry standard cubic foot of flue gas.

ii. The discharge of flue gases shall not exceed ten (10) percent opacity.

iii. The emission of hydrogen chloride (HCl) shall not cause an ambient impact greater than seventy (70) micrograms per cubic meter (24-hour average).

iv. The temperature in the secondary chamber must be at least 1800°F at all times of operation. No waste shall be charged unless this requirement is being met.

v. The residence time in the secondary chamber must be at least one and one-half (1.5) seconds.

vi. Daily records shall be kept of the times of operation, quantity of wastes incinerated and the temperature of the secondary chamber which temperature shall be monitored continuously. Records shall be maintained on hand for at least two (2) years.

vii. Only wastes generated on-site may be incinerated. Disposal of wastes from off-site shall cause the incinerator to be classified as a commercial incinerator and, therefore, subject to the requirements applicable to such units.

b. Commercial Incinerators. For purposes of this regulation, a commercial incinerator is any infectious waste incinerator that incinerates wastes other than or in addition to wastes generated on-site. A commercial infectious waste incinerator installed or modified after December 9, 1993, shall comply with the following:

i. Unless specified to be more stringent in a permit approved by the Permit Board, particulate matter emissions, opacity, and hydrogen chloride emissions shall comply with the requirements specified for incinerators which incinerate only those wastes generated on-site in a. preceding.

ii. The temperature in the secondary chamber must be at least 1800°F at all times of operation. An automatic waste feed system with an interlock to prevent charging of wastes whenever the secondary chamber temperature is below the specified minimum shall be employed.

iii. The residence time in the secondary chamber must be at least one and one-half (1.5) seconds.

iv. A manifest system, including a detailed description of the waste collection and transportation system shall be employed. Daily records shall be kept of the times of incinerator operation, quantity of wastes incinerated and temperature of the secondary chamber which temperature shall be monitored continuously. Records shall be maintained on hand for at least two (2) years.

v. Notwithstanding the requirements of Section 6.4.6. i. through iv., the Permit Board may in any permit, in accordance with Regulation APC-S-2, establish more stringent requirements for emissions, operating parameters, monitoring, and recordkeeping subject to the provisions of Miss. Code Ann. 49-17-34(2) and (3).

## SECTION 7. EXCEPTIONS

If any single source of emission or combination of sources of emissions is found to compromise the ambient air quality in the State, beyond the limitations set forth in any national primary and secondary ambient air quality standards now or hereafter established by the Administrator of the Environmental Protection Agency pursuant to the Clean Air Act as amended December 31, 1970, (Public Law 91-640) notwithstanding compliance with any maximum allowable emission rate allowed by this regulation, the Mississippi Commission on Environmental Quality may require such further reduction in emission from this or these sources as is necessary to obtain compliance with said national primary and secondary ambient air quality standards.

## SECTION 8. PROVISIONS FOR HAZARDOUS AIR POLLUTANTS

1. Emission Standards

National Emissions Standards for Hazardous Air Pollutants and National Emission Standards for Hazardous Air Pollutants for Source Categories. The National Emission Standards for Hazardous Air Pollutants are those duly promulgated by the U. S. Environmental Protection Agency in (or to be printed in) 40 C.F.R. Part 61 pursuant to Section 112 of the Federal Clean Air Act, as amended. The National Emission Standards for Hazardous Air Pollutants for Source Categories are those duly promulgated by the U.S. Environmental Protection Agency in (or to be printed in) 40 C.F.R. Part 63 pursuant to Section 112 of the Federal Clean Air Act, as amended. All such regulations, contained in 40 C.F.R. Parts 61 and 63, promulgated by the U.S. Environmental Protection Agency as of December 9, 1993, are incorporated herein and adopted by reference by the Commission as official regulations of the State of Mississippi and shall hereafter be enforceable as such (except the word "Administrator" in said standards and general implementing regulations shall be replaced by the words "Executive Director" and the word "Agency" shall be replaced by the word "Department"). Hereafter, any facility subject to the National Emission Standards for Hazardous Air Pollutants shall comply with the emission limitations and other requirements of said standards.

2. Compliance Extensions for Early Reductions

National Emission Standards for Hazardous Air Pollutants; Compliance Extensions for Early Reductions. The National Emission Standards for Hazardous Air Pollutants; Compliance Extensions for Early Reductions are regulations duly promulgated by the U.S. Environmental Protection Agency in (or to be printed in) 40 C.F.R. Part 63 pursuant to Section 112 of the Federal Clean Air Act, as amended. All such regulations promulgated by the U.S. Environmental Protection Agency as of December 9, 1993, are incorporated herein and adopted by reference by the Commission as official regulations of the State of Mississippi and shall hereafter be enforceable as such.

3. Case by Case Maximum Available Control Technology Requirements

The Mississippi Pollution Control Permit Board, in accordance with Commission Regulation APC-S-6, may require emissions limitations necessary to meet case by case maximum available control technology ("MACT") requirements in accordance with Section 112(j) and (g) of the Federal Act.

## SECTION 9. STACK HEIGHT CONSIDERATIONS

1. Definitions

(a) "Emission limitation" and "emission standard." A requirement established which limits the quantity, rate, or concentration of emissions of air pollutants on a continuous basis, including any

requirements which limit the level of opacity, prescribe equipment, set fuel specifications, or prescribe operation or maintenance procedures for a source to assure continuous emission reduction.

(b) "Stack." Any point in a source designed to emit solids, liquids, or gases into the air, including a pipe or duct but not including flares.

(c) "A stack in existence." The owner or operator had either:

(1) Begun, or caused to begin, a continuous program of physical on-site construction of the stack, or

(2) Entered into binding agreements or contractual obligations, which could not be cancelled or modified without substantial loss to the owner or operator, to undertake a program of construction of the stack to be completed in a reasonable time.

(d) "Dispersion technique." Any technique which attempts to affect the concentration of a pollutant in the ambient air by using that portion of a stack which exceeds good engineering practice stack height, varying the rate of emission of a pollutant according to atmospheric conditions or ambient concentrations of that pollutant, or increasing final exhaust gas plume rise by manipulating source process parameters, exhaust gas parameters, stack parameters, or combining exhaust gases from several existing stacks into one stack; or other selective handling of exhaust gas streams so as to increase the exhaust gas plume rise. The preceding sentence does not include:

(1) The reheating of a gas stream, following use of a pollution control system, for the purpose of returning the gas to the temperature at which it was originally discharged from the facility generating the gas stream:

(2) The merging of exhaust gas streams where:

(i) The source owner or operator demonstrates that the facility was originally designed and constructed with such merged gas streams;

(ii) After July 8, 1985, such merging is part of a change in operation at the facility that includes the installation of pollution controls and is accompanied by a net reduction in the allowable emissions of a pollutant. This exclusion from the definition of "dispersion techniques" shall apply only to the emission limitation for the pollutant affected by such change in operation; or

(iii) Before July 8, 1985, such merging was part of a change in operation at the facility that included the installation of emissions control equipment or was carried out for sound economic or engineering reasons. Where there was an increase in the emission limitation or, in the event that no emission limitation was in existence prior to the merging, an increase in the quantity of pollutants actually emitted prior to the merging, the reviewing agency shall presume that merging was significantly motivated by an intent to gain emissions credit for greater dispersion. Absent a demonstration by the source owner or operator that merging was not significantly motivated by such intent, the reviewing agency shall deny credit for the effects of such merging in calculating the allowable emissions for the source;

(3) The use of smoke management in agricultural or silvicultural prescribed burning programs; or

(4) Episodic restrictions on residential woodburning and open burning; or

(5) Techniques under Paragraph 9.1(d) which increase final exhaust gas plume rise where the resulting allowable emissions of sulfur dioxide from the facility do not exceed 5,000 tons per year.

(e) "Good engineering practice (GEP) stack height." The greater of:

(1) 65 meters measured from the ground-level elevation at the base of the stack;

(2) (i) For stacks in existence on January 12, 1979, and for which the owner or operator had obtained all applicable preconstruction permits or approvals required, Hg = 2.5 H, provided the owner or operator produces evidence that this equation was actually relied on in establishing an emission limitation;

(ii) For all other stacks,

$$Hg = H + 1.5L, \text{ where}$$

Hg = good engineering practice stack height, measured from the ground-level elevation at the base of the stack,

H = height of nearby structure(s) measured from the ground-level elevation at the base of the stack, and

L = lesser dimension (height or projected width) of nearby structure(s),

provided that the U. S. Environmental Protection Agency or the Commission may require the use of a field study or fluid model to verify GEP stack height for the source; or

(3) The height demonstrated by a fluid model or a field study approved by the U. S. Environmental Protection Agency or the Commission, which ensures that the emissions from a stack do not result in excessive concentrations of any air pollutant as a result of atmospheric downwash, wakes, or eddy effects created by the source itself, nearby structures, or nearby terrain features.

(f) "Nearby," As used in Paragraph 9.1(e)(2)(ii) is defined for a specific structure or terrain feature and means:

(1) For purposes of applying the formulae provided in Paragraph 9.1(e)(2) that distance up to five times the lesser of the height or the width dimension of a structure, but not greater than 0.8 km (1/2 mile), and

(2) For conducting demonstrations under Paragraph 9.1(e)(3) that distance not greater than 0.8 km (1/2 mile), except that the portion of a terrain feature may be considered to be nearby which falls within a distance of up to 10 times the maximum height (Ht) of the feature, not to exceed 2 miles if such feature achieves a height (ht) 0.8 km from the stack that is at least 40 percent of the GEP stack height determined by the formulae provided in Paragraph 9.1(e)(2)(ii) of this part or 26 meters, whichever is greater, as measured from the ground-level elevation at the base of the stack. The height of the structure or terrain feature is measured from the ground-level elevation at the base of the stack.

(g) "Excessive concentration." For the purpose of determining good engineering practice stack height under Paragraph 9.1(e)(3), excessive concentration means:

(1) For sources seeking credit for stack height exceeding that established under Paragraph 9.1(e)(2), a maximum ground-level concentration due to emissions from a stack

due in whole or part to downwash, wakes, and eddy effects produced by nearby structures or nearby terrain features which individually is at least 40 percent in excess of the maximum concentration experienced in the absence of such downwash, wakes, or eddy effects and which contributes to a total concentration due to emissions from all sources that is greater than an ambient air quality standard. For sources subject to the Prevention of Significant Deterioration program, an excessive concentration alternatively means a maximum ground-level concentration due to emissions from a stack due in whole or part to downwash, wakes, or eddy effects produced by nearby structures or nearby terrain features which individually is at least 40 percent in excess of the maximum concentration experienced in the absence of such downwash, wakes, or eddy effects and greater than a prevention of significant deterioration increment. The allowable emission rate to be used in making demonstrations under this part shall be prescribed by the new source performance standard that is applicable to the source category unless the owner or operator demonstrates that this emission rate is infeasible. Where such demonstrations are approved by the U. S. Environmental Protection Agency or the Commission, an alternative emission rate shall be established in consultation with the source owner or operator.

(2) For sources seeking credit after October 11, 1983, for increases in existing stack heights up to the heights established under Paragraph 9.1(e)(2), either a maximum ground-level concentration due in whole or part to downwash, wakes, or eddy effects as provided in Paragraph 9.1(g)(1) of this section, except that the emission rate specified by the State implementation plan (or, in the absence of such a limit, the actual emission rate) shall be used, or the actual presence of a local nuisance caused by the existing stack, as determined by the Commission, and

(3) For sources seeking credit after January 12, 1979, for a stack height determined under Paragraph 9.1(e)(2) where the U. S. Environmental Protection Agency or the Commission requires the use of a field study or fluid model to verify GEP stack height, for sources seeking stack height credit after November 9, 1984, based on the aerodynamic influence of cooling towers, and for sources seeking stack height credit after December 31, 1970, based on the aerodynamic influence of structures not adequately represented by the equations in Paragraph 9.1(e)(2), a maximum ground-level concentration due in whole or part to downwash, wakes, or eddy effects that is at least 40 percent in excess of the maximum concentration experienced in the absence of such downwash, wakes, or eddy effects.

2. Stack Height Effect on Emission Limitations

(a) The degree of emission limitation required of any source for control of any air pollutants shall not be affected by so much of any source's stack height that exceeds good engineering practice (GEP) or by any other dispersion technique, except as provided in (b) of this paragraph.

(b) The provisions of Paragraph 9.2(a) shall not apply to stack heights in existence, or dispersion techniques implemented, prior to December 31, 1970, except where pollutants are being emitted from such stacks or using such dispersion techniques by sources, as defined in Section 111(a)(3) of the Clean Air Act, which were constructed, or reconstructed or for which major modifications, as defined pursuant to Section 6, New Sources, were carried out after December 31, 1970.

(c) If any existing source, after appropriate application of the preceding limitations and provisions, is found to exceed or potentially exceed an air quality standard or increment, as appropriate, when operating within previously established emission limitations, the emission limitations applicable to that source shall be modified so as to eliminate and prevent the exceedance.

(d) If any new source or source modification, after appropriate application of the preceding limitations and provisions, is predicted to exceed an air quality standard, or increment, as

appropriate, when considered as operating under emission limitations consistent with other Applicable Rules and Regulations, the emission limitations considered shall be deemed inadequate and different emission limits, based on air quality considerations, shall be made applicable.

(e) If any source provides a field study or fluid modeling demonstration proposing a GEP stack height greater than that allowed by Paragraph 9.1(e)(1) and (2), then the public will be notified of the availability of the study and provided the opportunity for a public hearing before any new or revised emission limitation or permit is approved.

(f) The actual stack height used or proposed by a source shall not be restricted in any manner by requirements of this paragraph.

## SECTION 10. PROVISIONS FOR UPSETS, STARTUPS, AND SHUTDOWNS

1. Upsets

(a) The occurrence of an upset as defined in Section 2 constitutes an affirmative defense to an enforcement action brought for noncompliance with emission standards or other requirements of Applicable Rules and Regulations or any applicable permit if the source demonstrates through properly signed contemporaneous operating logs, or other relevant evidence that include information as follows:

(1) an upset occurred and that the source can identify the cause(s) of the upset;

(2) the source was at the time being properly operated;

(3) during the upset the source took all reasonable steps to minimize levels of emissions that exceeded the emission standards, or other requirements of Applicable Rules and Regulations or any applicable permit;

(4) the source submitted notice of the upset to the DEQ within 5 working days of the time the upset began; and

(5) the notice of the upset shall contain a description of the upset, any steps taken to mitigate emissions, and corrective actions taken.

(b) In any enforcement proceeding, the source seeking to establish the occurrence of an upset has the burden of proof.

(c) This provision is in addition to any upset provision contained in any applicable requirement.

2. Startups and Shutdowns

(a) Startups and shutdowns are part of normal source operation. Emissions limitations applicable to normal operation apply during startups and shutdowns except as follows:

(1) when sudden, unavoidable breakdowns occur during a startup or shutdown, the event may be classified as an upset subject to the requirements above;

(2) when a startup or shutdown is infrequent, the duration of excess emissions is brief in each event, and the design of the source is such that the period of excess emissions cannot be avoided without causing damage to equipment or persons; or

(3) when the emissions standards applicable during a startup or shutdown are defined by other requirements of Applicable Rules and Regulations or any applicable permit.

(b) In any enforcement proceeding, the source seeking to establish the applicability of any exception during a startup or shutdown has the burden of proof.

(c) In the event this startup and shutdown provision conflicts with another applicable requirement, the more stringent requirement shall apply.

3. Maintenance.

(a) Maintenance should be performed during planned shutdown or repair of process equipment such that excess emissions are avoided. Unavoidable maintenance that results in brief periods of excess emissions and that is necessary to prevent or minimize emergency conditions or equipment malfunctions constitutes an affirmative defense to an enforcement action brought for noncompliance with emission standards, or other regulatory requirements if the source can demonstrate the following:

(1) the source can identify the need for the maintenance;

(2) the source was at the time being properly operated;

(3) during the maintenance the source took all reasonable steps to minimize levels of emissions that exceeded the emission standards, or other requirements of Applicable Rules and Regulations or any applicable permit;

(4) the source submitted notice of the maintenance to the DEQ within 5 working days of the time the maintenance began or such other times as allowed by DEQ; and

(5) the notice shall contain a description of the maintenance, any steps taken to mitigate emissions, and corrective actions taken.

(b) In any enforcement proceeding, the source seeking to establish the applicability of this section has the burden of proof.

(c) In the event this maintenance provision conflicts with another applicable requirement, the more stringent requirement shall apply.

## SECTION 11. SEVERABILITY

If any provision, section, subsection, sentence, clause or phrase of any of these regulations, or the application of same to any person or set of circumstances is for any reason challenged or held to be invalid or void, the validity of the remaining regulations and/or portions thereof or their application to other persons or sets of circumstances shall not be affected thereby.

# PERMIT REGULATIONS FOR THE CONSTRUCTION AND/OR OPERATION OF AIR EMISSIONS EQUIPMENT

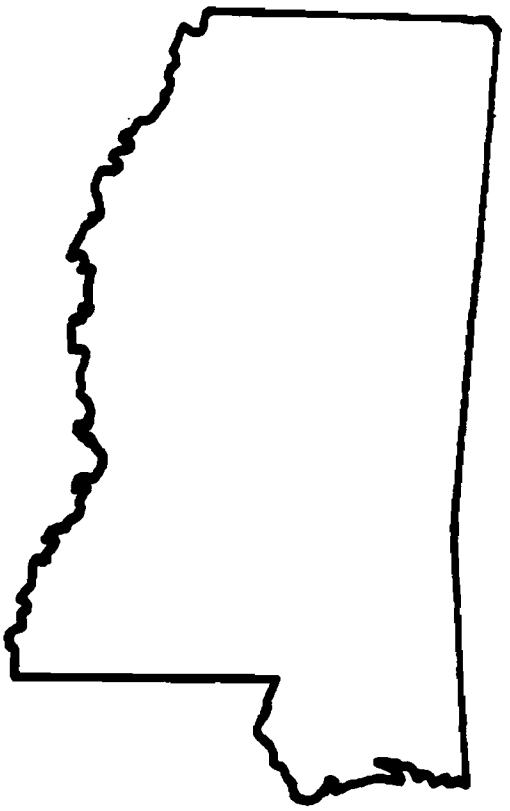

# STATE OF MISSISSIPPI


**MISSISSIPPI DEPARTMENT OF ENVIRONMENTAL QUALITY**
**OFFICE OF POLLUTION CONTROL**
**P. O. Box 10385**
**Jackson, Mississippi 39289-0385**


**REGULATION APC -S-2**
**Amended December 9, 1993**

MISSISSIPPI COMMISSION ON ENVIRONMENTAL QUALITY

# PERMIT REGULATIONS FOR THE CONSTRUCTION AND/OR OPERATION OF AIR EMISSIONS EQUIPMENT

## APC-S-2

Amended December 9, 1993

## I. GENERAL REQUIREMENTS

A. Definitions.

1. Regulation APC-S-5, "Regulations for the Prevention of Significant Deterioration of Air Quality", which were adopted by the Commission on June 28, 1990, provides in Section 2. thereof for the adoption of 40 CFR 52.21 as official Regulations of the State of Mississippi except for the changes set forth in Section 3 of Regulation APC-S-5. Therefore, the definitions set forth in 40 CFR 52.21(b), including the definitions of "major stationary source", "major modification", and "net emissions increase" as used in this Regulation APC-S-2 are incorporated by reference and shall have the same definition in this Regulation, except for the changes set forth in Section 3. of Regulation APC-S-5 and except for changes noted herein.

2. "Applicable Rules and Regulations." Any Commission Regulations concerning and/or affecting air emissions and air quality established pursuant to State Law.

3. "Commission." The Mississippi Commission on Environmental Quality.

4. "Corporate Officer." Corporate Officer means (i) a president, secretary, treasurer, or vice-president of the company or corporation in charge of a principal business function, or any other person who performs similar policy- or decision-making functions for the company or corporation, or (ii) the manager of one or more manufacturing, production, or operating facilities employing more than 250 persons or having gross annual sales or expenditures exceeding $25 million (in 1980 dollars), if authority to sign documents has been assigned or delegated to the manager in accordance with corporate procedures.

5. "DEQ." The Mississippi Department of Environmental Quality.

6. "EPA." The U.S. Environmental Protection Agency.

7. "Existing Facility." Any equipment, machines, devices, articles, contrivances or installations, built, installed or erected prior to May 11, 1972, that emits dust, fumes, mist, smoke, other particulate matter, vapor, gas or any combination thereof from the same process or related operation.

8. "Federal Act." The Federal Clean Air Act as amended in 1990, and any subsequent amendments.

9. "Fixed Capital Cost." The capital needed to provide all the depreciable components.

10. "Light commercial area." An area zoned for commercial use, or, in the absence of any local zoning ordinances, an area predominantly used for wholesale and retail trade in goods and services.

11. "Moderate Modification." Any modification which would constitute a major modification under Commission Regulation APC-S-5, "Regulations for the Prevention of Significant Deterioration of Air Quality", if the potential emissions increase was used in place of the net emissions increase in emissions calculations, or a major modification as defined by Section VI.E. of this Regulation APC-S-2 if impacting a nonattainment area.

12. "Moderate Stationary Source." Any facility which would constitute a major stationary source under Commission Regulation APC-S-5, "Regulations for the Prevention of Significant Deterioration of Air Quality", if potential uncontrolled emissions were used in place of actual emissions in emissions calculations, or a major stationary source as defined by Section VI. E. of this Regulation APC-S-2 if impacting a nonattainment area.

13. "Modification." Any physical change in or change in the method of operation of a facility which increases the actual emissions or the potential uncontrolled emissions of any air pollutant subject to regulation under the Federal Act emitted into the atmosphere by that facility or which results in the emission of any air pollutant subject to regulation under the Federal Act into the atmosphere not previously emitted. A physical change or change in the method of operation shall not include:

    (a) routine maintenance, repair, and replacement;

    (b) use of an alternative fuel or raw material by reason of an order under Sections 2 (a) and (b) of the Federal Energy Supply and Environmental Coordination Act of 1974 (or any superseding legislation) or by reason of a natural gas curtailment plan pursuant to the Federal Power Act;

    (c) use of an alternative fuel by reason of an order or rule under Section 125 of the Federal Act;

    (d) use of an alternative fuel or raw material by a stationary source which:

        (1) the source was capable of accommodating before January 6, 1975, unless such change would be prohibited under any federally enforceable permit condition which was established after January 6, 1975, pursuant to 40 CFR 52.21 or under regulations approved pursuant to 40 CFR 51.166; or

        (2) the source is approved to use under any permit issued under 40 CFR 52.21 or under regulations approved pursuant to 40 CFR 51.166;

    (e) an increase in the hours of operation or in the production rate unless such change would be prohibited under any federally enforceable permit condition which was established after January 6, 1975, pursuant to 40 CFR 52.21 or under regulations approved pursuant to 40 CFR subpart I or 40 CFR 51.166; or

    (f) any change in ownership of the stationary source.

14. "Modified Permit." Any permit already effective which is altered substantively as a result of the Permit Board's determination of the need for such alteration. Alterations to correct typographical errors or to clarify requirements shall not be considered substantive changes and, therefore, are not modifications for the purposes of this definition.

15. "New Facility." Any equipment, machines, devices, articles, contrivances or installations, built or erected on or after May 11, 1972, or any existing facility modified or reconstructed on or after said date that emits dust, fumes, mist, smoke, other particulate matter, vapor, gas or any combination thereof from the same process or related operation.

16. "Permit Board." The Mississippi Environmental Quality Permit Board.

17. "Potential emissions increase." Any calculated increase in potential uncontrolled emissions from a particular physical change or change in method of operation of a stationary source if contemporaneous decreases in actual emissions are not considered in the calculation.

18. "Potential uncontrolled emissions." The emission rate of a stationary source calculated using the maximum capacity of the source and the most stringent of the following:

    (a) The applicable emission standards set forth in the EPA-approved State Implementation Plan (primarily consisting of the applicable EPA-approved provisions of Commission Regulation APC-S-1, "Air Emissions Regulations for the Prevention, Abatement, and Control of Air Contaminants").

    (b) The applicable standards as set forth in 40 CFR Parts 60 and 61 which have been adopted by reference in Sections 6. and 8. of Regulation APC-S-1, "Air Emission Regulations for the Prevention, Abatement, and Control of Air Contaminants", as official Regulations of the State of Mississippi.

    (c) Any other Federally enforceable emission limitation or permit condition or emission standard.

    (d) The emission rate of the source without any air pollution control equipment or operational limitation.

19. "Reconstruction". The replacement of components of any existing facility to such an extent that:

    (a) The fixed capital cost of the new components exceeds 50 percent of the fixed capital cost that would be required to construct a comparable entirely new facility; and

    (b) It is technologically and economically feasible to meet the applicable standards for a new facility.

20. "Recreational area." Recreational area means:

    (a) a national, state, county, or city designated park; or

    (b) an outdoor recreational area, such as a golf course or swimming pool, owned by a city, county, or other public agency.

21. "Residential area." Residential area means:

    (a) a group of 20 or more single family dwelling units on contiguous property and having an average density of two or more units per acre, or

    (b) a group of 40 or more single family dwelling units on contiguous property and having an average density of one or more units per acre, or

    (c) a subdivision containing at least 20 constructed houses, in which the subdivision plat is recorded in the chancery clerk's office of the appropriate county.

22. "State Law." The Mississippi Air and Water Pollution Control Law, specifically, Miss. Code Ann §§ 49-17-1 through 49-17-43, and any subsequent amendments.

23. "State Permit to Operate or State Operating Permit." A permit issued under State Law to operate air emissions equipment, exclusive of Title V Permits.

24. "Synthetic Minor Source." Any facility which would otherwise constitute a major source under Commission Regulation APC-S-6, "Air Emissions Operating Permit Regulations for the Purposes of Title V of the Federal Clean Air Act", except that the owner or operator of the facility elects for federally enforceable emissions limitations which may include permit conditions restricting hours of operation, or type or amount of material stored, combusted or processed, or establishing more stringent air pollution control efficiency requirements to lower allowable emissions for air pollutants in the State Permit to Operate below applicability thresholds for a Title V major source. (The definition of a major source set forth in Commission Regulation APC-S-6, "Air Emissions Operating Permit Regulations for the Purposes of Title V of the Federal Clean Air Act" is incorporated herein and adopted by reference.)

25. "Title V." The air operating permit program mandated in Title V of the 1990 amendments to the federal Clean Air Act, codified in 42 U.S.C. § 7661.

26. "Title V permit." Any permit or group of permits covering a Title V source that is issued, renewed, amended, or revised pursuant to Commission Regulation APC-S-6.

27. "Title V sources." Title V sources include the following:

    (a) any major source;

    (b) any source, including an area source, subject to a standard, limitation or other requirement under Section 111 of the Federal Act;

    (c) any source, including an area source, subject to a standard or other requirement under Section 112 of the Federal Act, except that a source is not required to obtain a permit solely because it is subject to regulations or requirements under Section 112(r) of the Federal Act;

    (d) any affected source; and

    (e) any source in a source category designated by the Administrator.

B. General Permit Requirements.

1. Unless otherwise provided by Section XIII, or other provisions of these Regulations, any new, reconstructed or modified facility must have a permit to construct before beginning construction, reconstruction, or modification and a State Permit to Operate before beginning operations.

2. All applications must be submitted on the form supplied by the Permit Board.

3. The Permit Board may require the applicant to submit any additional information which the Permit Board deems relevant to its decision on the permit application.

4. Permit Types. The Permit Board will issue two types of permits, a permit to construct air emissions equipment and a State Permit to Operate such equipment. In the case of new facilities, application may be made for both permits simultaneously on the form provided by the Permit Board.

5. A permit issued by the Permit Board will generally be for a specific site identified in the application. For portable facilities which will be located only temporarily at a site or sites, the Permit Board may issue a statewide permit.

6. It is the responsibility of the applicant/permittee to obtain all other approvals, permits, clearances, easements, agreements, etc., which may be required.

7. The provisions of a permit are severable. If any provision of a permit, or the application of any provision of a permit to any circumstances, is challenged or held invalid, the validity of the remaining permit provisions and/or portions thereof or their application to other persons or sets of circumstances, shall not be affected thereby.

8. In the event of a conflict between any of the requirements of these regulations and/or applicable requirements of any other regulation or law, the more stringent requirements shall be applied.

## II. GENERAL STANDARDS APPLICABLE TO ALL PERMITS

A. Except as provided for in the "Air Emissions Operating Permit Regulations for the Purposes of Title V of the Federal Clean Air Act" (APC-S-6), no permit shall be issued unless the applicant has complied with applicable requirements of the Commission Air Emission Regulations for the Prevention, Abatement, and Control of Air Contaminants (APC-S-1); the Commission Permit Regulations for the Construction and/or Operation of Air Emissions Equipment (APC-S-2) the Commission Regulations for the Prevention of Air Pollution Emergency Episodes (APC-S-3); the Commission Ambient Air Quality Standards (APC-S-4) except as provided for in Section VI.E. herein; the Commission Regulations for the Prevention of Significant Deterioration of Air Quality (APC-S-5), any amendments to these Rules and Regulations, and additional relevant Rules and Regulations promulgated by the Commission and/or Permit Board.

B. General Provisions.

1. Any air emissions facility which holds a valid Title V permit shall be deemed to be in compliance with the requirements regarding a State Permit to Operate contained in APC-S-2 and State Law.

2. Any air emissions facility required to obtain a Title V permit shall apply for a State Permit to Operate in accordance with APC-S-2 to be issued for a term of either (1) twelve months from the effective startup date of the facility or (2) until the facility obtains its Title V permit, whichever is earlier.

3. The Permit Board may require a permittee to submit an application for a Title V permit at any time the permittee becomes subject to Title V. The Permit Board may require a permittee to submit a Title V application even though the permittee has previously submitted an application for renewal of its State Operating Permit.

4. When requested by the Permit Board, an applicant shall submit information to demonstrate it has the financial resources to comply with the terms and conditions of the permit.

5. When requested by the Permit Board, an applicant shall submit information on the applicant's compliance history to provide reasonable assurance that it will comply with the terms and conditions of the permit.

6. The knowing submittal of a permit application with false information may serve as the basis for the Permit Board to void the permit issued pursuant thereto or subject the applicant to penalties for operating without a valid permit pursuant to State Law.

7. Acceptance by the Permit Board of a permit application does not constitute a waiver of the DEQ's right to assess appropriate penalties against the applicant pursuant to State Law for constructing or operating without a valid permit.

8. The issuance of a permit does not release the permittee from liability for constructing or operating air emissions equipment in violation of any applicable statute, rule or regulation of state or federal environmental authorities.

9. Applicants for all permits to construct or operate, or to renew a State Permit to Operate, shall specify in their application the air emission rate for each air pollutant subject to regulation under the Federal Act that can be reasonably expected to be emitted into the air as a result of operations from the facility.

10. Each application must be signed by the applicant. If the applicant is a corporation, it must be signed by a corporate officer. If the applicant is a partnership, it must be signed by a partner with authority to bind the partnership. In the case of a governmental agency, the application must be signed by the facility manager or senior staff officer responsible for the installation's or facility's environmental compliance. The signature of the applicant shall constitute an agreement that the applicant assumes the responsibility for any alterations, additions or changes in operation that may be necessary to achieve and maintain compliance with all Applicable Rules and Regulations.

11. The Permit Board may, in any permit, establish limitations and requirements on the emission of air pollutants and on other parameters of a facility to assure that the requirements of Applicable Rules and Regulations are met subject to Miss. Code Ann. §49-17-34(2) and (3). Where the Permit Board does not establish limitations and requirements in a permit, the permit shall provide that the rates of emissions and other operating conditions and parameters specified in the application shall be the applicable limitations and requirements.

12. The Permit Board may, in any permit, establish requirements for compliance testing by emissions sampling and analysis, for emissions and operation monitoring, and for reporting of the results from such testing and monitoring. The Permit Board shall consider factors in establishing such requirements as follows:

    (a) Applicable Rules and Regulations which address testing, monitoring, and reporting;

    (b) prior results of testing and monitoring at the facility;

    (c) the applicant's compliance history;

    (d) the size of the facility;

    (e) the cost of the testing, monitoring, reporting; and

    (f) the potential environmental impact of the facility.

13. The Permit Board may, in any permit, subdivide the permit requirements to facilitate their expression so as to adequately define, describe, and encompass emissions-producing units, processes, and other portions of a facility subject to the requirements.

14. The Permit Board may, in any permit to construct, require the permittee to perform special environmental monitoring for the purpose of detecting, quantifying, and determining the impact of pollutants existing prior to the date the permittee begins to emit when, during the review of the application and the public participation process, questions arise, with regard to separate environmental impacts of pollution raised by the applicant or the Department and which cannot be determined by available scientific data and scientific methods. The Permit Board may, in

any State Permit to Operate, require the permittee to perform special environmental monitoring for the purpose of detecting, quantifying, and determining the impact of pollutants emitted by the permittee when such monitoring is necessary because traditional air quality monitoring techniques will not measure the quality of the environment nor the impact of the pollutants emitted into the environment. Such special monitoring may include, but is not limited to, parameters such as ambient concentration, deposition, bio-accumulation in flora and fauna, etc.

15. No permit for the construction or relocation of equipment which will cause the issuance of air contaminants shall be issued when said equipment cannot comply with buffer zone requirements as follows:

    (a) All sources of air emissions must be at least 150 feet from the nearest residential or recreational area.

    (b) All sources of air emissions at asphalt plants utilizing conventional technology for the control of air contaminants must be at least 1500 feet from the nearest residential, recreational or light commercial area.

    (c) All sources of air emissions at asphalt plants utilizing best available technology for the control of air contaminants must be at least 600 feet from the nearest residential, recreational or light commercial area.

    (d) Rendering plants or other similar operations which may cause objectionable odors must be at least 1500 feet from the nearest residential, recreational or light commercial area and be located in compliance with Miss. Code Ann. § 41-51-19.

    (e) Notwithstanding (a) above, incinerators must be at least 150 feet from any dwelling or from any light commercial building not owned by the applicant.

    (f) Where buffer zone requirements cannot be met, the Permit Board will consider requests for exceptions to, or variances from, these requirements upon the applicant's submittal of sufficient proof that affected property owners within the subject buffer zone have had timely and sufficient notice of the proposed facility. Any comments received as a result of such notice shall be considered prior to action upon any request for exceptions to, or variances from, the buffer zone requirements.

    (g) The Permit Board may establish buffer zone requirements for facilities not included in 15(a)-(f) considering factors including but not limited to, the type of emissions, the quantity of emissions, the physical characteristics of the facility (such as the location) and such other factors that the Permit Board deems appropriate to protect human health, welfare, or the environment.

16. Each permit issued shall include the following:

    (a) It shall not be a defense for a permittee in an enforcement action that it would have been necessary to halt or reduce the permitted activity in order to maintain compliance with the conditions of the permit unless halting or reducing activity would create an imminent and substantial endangerment threatening the public health and safety of the lives and property of the people of this state.

    (b) The permit and/or any part thereof may be modified, revoked, reopened, and reissued, or terminated for cause. Sufficient cause for a permit to be reopened shall exist when an air emissions facility becomes subject to Title V. The filing of a request by the permittee for a permit modification, revocation and reissuance, or termination, or of a notification of planned changes or anticipated noncompliance does not stay any permit condition.

(c) The permit does not convey any property rights of any sort, or any exclusive privilege.

(d) The permittee shall furnish to the DEQ within a reasonable time any information the DEQ may request in writing to determine whether cause exists for modifying, revoking and reissuing, or terminating the permit or to determine compliance with the permit. Upon request, the permittee shall also furnish to the DEQ copies of records required to be kept by the permit or, for information claimed to be confidential, the permittee shall furnish such records to the DEQ along with a claim of confidentiality. The permittee may furnish such records directly to the Administrator along with a claim of confidentiality.

C. Permit Suspension or Revocation

After notice and opportunity for hearing, the Permit Board may modify, suspend or revoke in whole or in part any permit issued pursuant to these regulations for good cause shown including, but not limited to, the following:

1. persistent violation of any of the terms or conditions of the permit;

2. obtaining the permit by misrepresentation or failure to disclose fully all relevant facts; or

3. a change in federal, state or local laws or regulations that require either a temporary or permanent reduction or elimination of previously authorized air emissions.

D. Permit Modification Due to Modification in Facilities

When a permittee who holds a State Permit to Operate files an application to modify its facilities, the Permit Board may consider the application as an application to construct and an application to modify the existing State Operating Permit to allow the operation of additional facilities. The requirements for modification of the State Permit to Operate shall be the same as for issuance of a separate State Permit to Operate for the new or expanded air emissions.

E. Modification of Permits Without Modification of Facilities

The terms and conditions of a previously issued permit to construct or State Permit to Operate may, upon request of the permittee, be modified if the Permit Board finds that those terms and conditions are no longer necessary to insure compliance with all Applicable Rules and Regulations or that the modifications sought by the permittee result in operating conditions that are protective of human health and the environment.

## III. STANDARDS FOR GRANTING A STATE PERMIT TO OPERATE AN EXISTING FACILITY

An existing facility that can adequately demonstrate, either by stack emissions data, by acceptable mathematical methods, by visible emissions evaluation, or by a combination of these methods, as described in Sections VII and VIII, that emissions from the facility are in compliance with all Applicable Rules and Regulations and can also adequately demonstrate that the operation of their facility will not interfere with the attainment and maintenance of State and National Ambient Air Quality Standards will be granted a State Permit to Operate for five (5) years or a shorter period of time deemed appropriate by the Permit Board provided requirements of Section II have also been met.

## IV. APPLICATION FOR PERMIT TO CONSTRUCT AND STATE PERMIT TO OPERATE NEW FACILITY

A. All engineering plans and specifications required by DEQ must bear the signature, registration number, and seal of a professional engineer registered in the State of Mississippi.

B. Failure to apply for a permit to construct and a State Permit to Operate a new facility or the premature start of construction without the written consent of the Permit Board shall constitute a violation of the State Law. All violators shall be subject to prosecution.

C. Information Required.

1. The Permit Board may require each application for a permit to construct a new facility be accompanied by two (2) complete sets of site drawings, construction drawings, design calculations and specifications.

2. Upon request by the Permit Board, the applicant shall furnish any additional information necessary to evaluate the design adequacy of the new facility.

3. The Permit Board may require the applicant to predict the impact of emissions on air quality using air quality models as referenced in Section VI.B. herein.

## V. PUBLIC PARTICIPATION AND PUBLIC AVAILABILITY OF INFORMATION

A. For any application for a Prevention of Significant Deterioration Permit to Construct, the DEQ will follow public information procedures specified in Commission Regulation APC-S-5, "Regulations for the Prevention of Significant Deterioration of Air Quality", and any other Applicable Rules and Regulations set forth herein.

B. For any application for a Title V Permit to Operate, the DEQ will follow public information procedures specified in Commission Regulation APC-S-6, "Air Emissions Operating Permit Regulations For The Purposes Of Title V Of The Federal Clean Air Act".

C. For any application for a permit to construct a new moderate stationary source, a moderate modification, or a new major stationary source impacting a nonattainment area as defined in Section VI.E., the DEQ will provide opportunity for public comment on information submitted by the owner and operator. The public information will include the DEQ's analysis of the effect of construction or modification on ambient air quality, including the DEQ's recommendation for permit issuance or denial and shall include, as a minimum the following:

1. availability for public inspection in at least one location in the area affected of the information submitted by the owner or operator and of DEQ's analysis of the effect on air quality;

2. a 30-day period for submittal of public comment; and

3. a notice, by prominent advertisement in the area affected, of the location of the source information and analysis.

A copy of the notice will be sent to the Administrator of EPA through Region IV, and to all other State and local air pollution control agencies having jurisdiction in the region in which such new or modified installation will be located. A permit to construct issued pursuant to this paragraph is federally enforceable.

D. For any application for a State Permit to Operate a synthetic minor source, including an application for renewal of the State Permit to Operate a synthetic minor source, the DEQ will provide opportunity for public comment on information submitted by the owner or operator. The public information will

include the application submitted, the DEQ's recommendation for permit issuance or denial (including the draft permit) and shall include, as a minimum the following:

1. availability for public inspection in at least one location in the area affected of the information submitted by the owner or operator and of DEQ's recommendation and the draft permit;

2. a 30-day period for submittal of public comment; and

3. a notice, by prominent advertisement in the area affected, of the location of the source information.

A copy of the notice will be sent to the Administrator of EPA through Region IV, and to all other State and local air pollution control agencies having jurisdiction in the region in which the source is or will be located. A State Permit to Operate issued to a synthetic minor source is federally enforceable.

E. For any request for coverage under a general permit to construct a moderate source or moderate modification, the public information procedures described in C. above will be followed except that the public information will also include the request for coverage. A general permit to construct which covers a moderate source or moderate modification is federally enforceable.

F. For any request for coverage under a general permit to operate a synthetic minor source, the public information procedures described in D. above will be followed except that the public information will also include the request for coverage. A general permit to operate which covers a synthetic minor source is federally enforceable.

G. In addition to A. through F. above, the Permit Board may provide notice to the public and provide opportunity for public comment on any application for a construction permit or State Operating Permit.

H. In addition to public hearings on PSD permits, as provided for in Commission Regulation APC-S-5, "Regulations for the Prevention of Significant Deterioration of Air Quality", the Permit Board may hold a public hearing on any application for a construction permit or State Operating Permit if it determines that there is sufficient interest in the application.

## VI. APPLICATION REVIEW

A. Standards for Approving an Application for a Permit to Construct and a State Permit to Operate a New Facility.

1. A new facility shall be designed and constructed so as to operate without causing a violation of any Applicable Rules and Regulations.

2. A new facility shall be designed and constructed so as to operate without interfering with the attainment and maintenance of State and National Ambient Air Quality Standards.

3. A new facility shall be designed and constructed so as to operate such that the emission of air toxics does not result in an ambient concentration sufficient to adversely affect human health and well-being or unreasonably and adversely affect plant or animal life beyond the facility boundaries.

(a) The Permit Board may require the applicant to provide data necessary to evaluate the impacts of air toxics, including the predicted emission rates and ambient concentrations, when it deems necessary, considering factors that follow:

(1) the types of air toxics involved;

(2) the quantity of emissions involved;

(3) the physical characteristics of the facility (such as the location, size, etc.);

(4) the anticipated human health effects;

(5) the weight of scientific data supporting the health effects associated with the air toxics;

(6) the level of air pollution control equipment employed; and

(7) such other factors as the Permit Board deems appropriate.

(b) When an air toxics evaluation is required by the Permit Board, the evaluation shall consider:

(1) an analysis of the chronic human health risks associated with the air toxics including the lifetime excess cancer risks to the most exposed individual from air toxics which are known, probable, or possible human carcinogens calculated or determined using appropriate pathways of exposure;

(2) an analysis of the acute human health effects associated with the air toxics utilizing the most current health-effects data published by EPA and/or recognized public health institutions or, in its absence, other extrapolative acute health-effects data; and

(3) where applicable, an analysis of the impacts and effects of the air toxics on plant and/or animal life beyond the boundaries of the applicant's property.

(c) The carcinogenic risk analysis shall be considered to have satisfied applicable requirements of this regulation and Regulation APC-S-1 when the lifetime excess cancer risk to the most exposed individual outside the property boundary is determined to be less than $1 \times 10^{-6}$. When the excess cancer risk is determined to be greater than $1 \times 10^{-6}$ but less than $1 \times 10^{-4}$, the Permit Board may either:

(1) require the applicant to demonstrate that, notwithstanding the calculated risks, public health is not threatened by the proposed emissions of air toxics; or

(2) establish permit conditions to limit or prohibit the emissions of air toxics.

When this excess cancer risk is calculated or determined to be greater than $1 \times 10^{-4}$, the applicant must demonstrate that, notwithstanding the calculated risks, public health is not threatened by the proposed emissions of air toxics.

4. The construction of a new facility shall be performed in such a manner so as to reduce fugitive dust emission from construction activities to a minimum.

5. Upon certification of construction in accordance with Section VI. D. hereof, the State Permit to Operate issued hereunder shall be effective.

(a) The State Permit to Operate may, in the discretion of the Permit Board, contain requirements that the permittee establish by emissions data, test results, or reports that the facility can achieve and maintain the emission standards set forth in the permit to construct and, through the operation of said facility, will not interfere with the attainment and maintenance of State and National Ambient Air Quality Standards then in effect.

(b) Failure to establish that the facility can achieve and maintain the emission standards set forth in the permit to construct subjects the permittee to potential prosecution and penalty for operating in violation of its permit.

6. An application for a permit to modify or reconstruct a facility shall be treated as an application to construct and operate a new facility and must comply with all applicable standards.

B. Air Quality Models

1. All estimates of ambient concentrations of air pollutants shall be based on the applicable air quality models, data bases, and other requirements specified in the "Guideline on Air Quality Models (Revised)" (1986), Supplement A (1987) and Supplement B (1993) which are incorporated herein and adopted by reference.

2. Where an air quality impact model specified in the "Guideline on Air Quality Models (Revised)" (1986), Supplement A (1987) and Supplement B (1993) is inappropriate, the model may be modified or another model substituted. Such a modification or substitution of a model may be made on a case-by-case basis or, where appropriate, on a generic basis. Written approval of the DEQ and the Administrator of EPA must be obtained for any modification or substitution. In addition, use of a modified or substituted model shall be subject to public notice and opportunity for public comment.

C. Cancellation of Permit to Construct a New Facility.

1. The permit to construct will expire if construction does not begin within eighteen (18) months from the date of issuance or if construction is suspended for eighteen (18) months or more.

2. The Permit Board may extend the permit to construct for such additional time it deems appropriate if, at the time of the extension request, the applicant can demonstrate it meets all requirements necessary to issue a new permit to construct.

D. Certification of Construction.

1. Upon the completion of construction or installation of an approved facility, the applicant shall notify the Permit Board that construction or installation was performed in accordance with the approved plans and specifications on file with the Permit Board. The previously issued State Permit to Operate shall become effective upon receipt of this notification by the DEQ.

2. The Permit Board shall be promptly notified in writing of any change in construction from the previously approved plans and specifications or permit. If the Permit Board determines the changes are substantial, it may require the submission of a new application to construct with "as built" plans and specifications. Notwithstanding any provision herein to the contrary, the acceptance of an "as built" application shall not constitute a waiver of the right to seek compliance penalties pursuant to State Law.

E. Additional Requirements for a Construction Permit or a State Operating Permit for a New Facility Significantly Impacting an Area in which a National Ambient Air Quality Standard is being exceeded or will be exceeded.

1. Definitions:

(a) "Offset Policy." The Offset Policy is the Emission Offset Interpretive Ruling adopted by EPA in (or to be printed in) 40 C.F.R. Part 51, Appendix S, and any subsequent amendments thereto as of April 25, 1988. A copy of such ruling is attached hereto and is incorporated herein and adopted by reference as Regulations of the Commission except as follows:

i. Notwithstanding Appendix S, the requirements for Offsets and Lowest Achievable Emission Rate will apply to all major stationary sources and major modifications which have a significant impact on nonattainment of the applicable ambient air quality standard.

ii. The source types specified in Section IV.B. of Appendix S of 40 CFR Part 51 will not be excepted from any conditions of the Offset Policy or any of the requirements contained herein.

All terms in Section VI. E. shall have the same definitions as those contained in the Offset Policy including the term "major stationary source" which is defined differently for purposes of this paragraph than throughout the remainder of Regulation APC-S-2.

(b) "Nonattainment area." A geographical area of the state in which a violation of a National Ambient Air Quality Standard is occurring and which has been designated by the Commission or EPA as nonattainment with respect to that standard.

(c) "Nonattainment Area Implementation Plan." A revision to the Commission's Implementation Plan for the Control of Air Pollution, such revision having been adopted by the Commission and approved by the U.S. Environmental Protection Agency pursuant to the Federal Act, for the purpose of attainment and maintenance of the applicable National Ambient Air Quality Standard in a nonattainment area.

(d) "Reasonable Further Progress Schedule." An incremental reduction in total emissions of the applicable air pollutant allowed in order to provide for the attainment of the applicable National Ambient Air Quality Standard by the applicable statutory deadlines.

(e) "Significance Levels." Concentrations of pollutants against which air quality contributions of a facility are compared to determine whether the facility significantly impacts air quality in an area. The levels are as follows:

$SO_2$ 1.0 $\mu g/m^3$, annual average; 5 $\mu g/m^3$, 24-hour average; 25 $\mu g/m^3$, 3-hour average

$PM_{10}$ 1.0 $\mu g/m^3$, annual average; 5 $\mu g/m^3$, 24-hour average

$NO_2$ 1.0 $\mu g/m^3$, annual average

CO 0.5 $mg/m^3$, 8-hour average; 2.0 $mg/m^3$, 1-hour average

(f) "Significant impact." Air quality impact which exceeds the significance level.

2. A new facility which is a major stationary source or major modification for the pollutant which contributes to violations of the National Ambient Air Quality Standard for which the area is nonattainment and which locates in or significantly impacts a nonattainment area must also meet the following requirements before a construction permit or a State Operating Permit is issued:

(a) The facility must meet the lowest achievable emission rate for the applicable air pollutant.

(b) When the applicable Nonattainment Area Implementation Plan contains a Reasonable Further Progress Schedule, the Permit Board must determine that, by the time the facility is to commence operation, total combined allowable emissions of the

applicable air pollutant from existing sources in the area, the proposed new facility, and all other new facilities in the area shall be no greater than the total allowable emissions for the nonattainment area which represents reasonable further progress for attaining the standard as defined in the applicable Nonattainment Area Implementation Plan Reasonable Further Progress Schedule.

(c) The owner or operator of the proposed new facility must demonstrate that all major stationary sources which are owned or operated by such person (or by any entity controlled by, or under common control with such person) in the state are subject to emission limitations and are in compliance, or on a schedule for compliance, with all applicable emission limitations contained in any Applicable Rules and Regulations.

(d) Exceptions will be made to the inclusion of fugitive emissions in the determination of whether a new facility is a major stationary source or major modification to the extent that those exceptions are made in the Offset Policy.

(e) At such time that a particular source or modification becomes a major stationary source or major modification solely by virtue of a relaxation in an enforceable limitation on the capacity of the source or modification otherwise to emit a pollutant, the requirements of these Regulations shall apply to the source or modification as though construction had not yet commenced.

(f) When the Reasonable Further Progress Schedule in an applicable Nonattainment Area Implementation Plan is determined to have become inapplicable due to consumption of all available growth allowance under such Schedule, the facility must meet the conditions of Section VI.E.3. below.

3. A new facility which proposes to locate in or near an area where an air quality standard is being or will be exceeded but for which no nonattainment area implementation plan has been adopted shall be subject to the following:

(a) The facility shall be subject to the Offset Policy if:

(i) The facility is a major stationary source or major modification for the pollutant for which the standard is or will be exceeded; and

(ii) The facility is within or has significant impact in the area where the standard is or will be exceeded.

(b) In addition to the requirements of the Offset Policy, the facility shall not be granted a construction permit or a State Operating Permit unless the owner or operator demonstrates that:

(i) emissions reductions to offset the new facility emissions will compensate for the adverse ambient impact caused by the new facility; and

(ii) the emissions reductions have been achieved.

4. The granting of a Permit shall not relieve the source of the responsibility to comply with other applicable requirements of this Regulation or with any other applicable Regulation or Law.

## VII. COMPLIANCE TESTING

A. Where compliance testing is required in any permit it shall be performed as provided herein.

B. Requirements.

1. The emissions sampling and analysis will be performed in accordance with EPA Test Methods and with any continuous emission monitoring requirements, if applicable, unless otherwise approved by the Permit Board and the EPA. The Permit Board may establish an appropriate method for deviation from a test method.

2. In the event there is no applicable EPA Test Method or method required by Applicable Rules and Regulations, the Permit Board may specify an appropriate test method, taking into consideration any test methodology proposed by the applicant.

3. The results of the emissions sampling and analysis shall be expressed both in units consistent with the emission standards as set forth in any Applicable Rules and Regulations and in units of mass per time.

4. Compliance testing will be performed at the expense of the applicant.

5. The Permit Board may monitor compliance tests and perform compliance tests. Proper notification of compliance tests shall be provided to the Permit Board in accordance with Applicable Rules and Regulations or as specified in the applicable permit.

6. A facility which emits or causes to be emitted matter other than through a stack or a defined outlet of an air cleaning device may be classified inadequate in regard to control equipment. Facilities which comply with emission standards which specifically address and include fugitive emissions shall be presumed adequate provided all other Applicable Rules and Regulations are complied with.

7. The emissions sampling and analysis report shall include but not be limited to the following:

   (a) detailed description of testing procedures;

   (b) sample calculation;

   (c) results; and

   (d) comparison of results to all Applicable Rules and Regulations and to emission limitations in the permit.

8. Unless otherwise specified in Applicable Rules and Regulations or by a condition of a permit issued by the Permit Board, compliance testing must be performed when the facility is operating at capacity and is otherwise operating normally. In the event that a demonstration of compliance by testing is performed at less than capacity, the Permit Board may modify the permit to limit capacity of the facility to the rate at which compliance was demonstrated if the Permit Board determines the rate was not representative of the normal operation of the facility or compliance with Applicable Rules and Regulations was not demonstrated. In the event that the facility is not operating or being operated normally during a demonstration of compliance by testing, the results of such testing will not be accepted by the Permit Board as representative of normal operation and will be considered inadequate.

C. Compliance testing will be required of all facilities for which there is an applicable New Source Performance Standard or National Emission Standard for Hazardous Air Pollutants in accordance with the methods and time frames allowed by the applicable standard codified at 40 CFR Parts 60, 61, and 63 and the Federal Act.

## VIII. EMISSIONS EVALUATION REPORT

Where emissions evaluation reporting is required in any permit, acceptable mathematical methods to demonstrate control adequacy shall include but not be limited to the following:

A. an emission inventory including:

1. location and description of control equipment at each point source;

2. determination of all possible pollutants at each point source (characteristics, conditions, particle size distribution, etc.);

3. listing of all stack parameters at each point of emission, and

4. detailed description of input material (e.g., percent sulfur content, percent moisture, average BTU heating value, input rate, etc.); and

B. a detailed engineering report including:

1. sufficient calculations to demonstrate uncontrolled emissions;

2. sufficient calculations to support or show design efficiency of control equipment;

3. sufficient calculations to demonstrate controlled emissions; and

4. comparison of calculated controlled emissions with the applicable emission standards as set forth in Regulation APC-S-1.

## IX. PROCEDURES FOR RENEWAL OF STATE PERMIT TO OPERATE

A. A State Permit to Operate shall expire five (5) years from the effective date of said permit or within any shorter period of time deemed appropriate by the Permit Board and stated in the State Permit to Operate when issued.

B. Not less than one hundred and eighty (180) days prior to the expiration date of the State Permit to Operate, the applicant shall make application for renewal of a State Permit to Operate if the applicant desires to continue operation of that facility. If the applicant submits a timely and complete application pursuant to this paragraph and the Permit Board, through no fault of the applicant, fails to act on the application on or before the expiration date of the existing permit, the applicant shall continue to operate the facility under the terms and conditions of the expired permit which shall remain in effect until final action on the application is taken by the Permit Board.

C. The application for renewal of a State Permit to Operate shall be substantiated with current emissions data, test results or reports, or other data as deemed necessary.

## X. STANDARDS FOR RENEWAL OF STATE PERMIT TO OPERATE

A facility shall be reissued a State Permit to Operate for five (5) years or a shorter period of time deemed appropriate by the Permit Board provided it can adequately demonstrate either by stack emissions data, or by acceptable mathematical methods, or by visible emissions evaluation, or by a combination of these methods as follows:

A. the emissions from said facility are in compliance with the emission limitations as set forth in its previously issued permit to construct and with any then existing Applicable Rules and Regulations;

B. that the operation of said facility is not interfering with the maintenance of State and National Ambient Air Quality Standards; and

C. all provisions of Sections I.B. and II. of this Regulation have been met.

## XI. REPORTING & RECORDKEEPING

A. The Permit Board may require in any permit the installation of sampling ports with safe access and the installation, maintenance and use of monitoring equipment.

B. The Permit Board may require in any permit the maintenance of records relating to the operation of air contamination sources, and any authorized representatives of the Commission may examine and copy any such records pertaining to the operation of such air contaminant source. Copies of such records shall be submitted to the Permit Board as required by Applicable Rules & Regulations or the permit or upon request.

## XII. EMISSION REDUCTION SCHEDULE

A. In accordance with Commission Regulation APC-S-3, it is the responsibility of each and every facility with actual emissions in excess of 0.25 tons per day of total air contaminants, and other significant sources, to have a Commission-approved emissions reduction schedule which shall set forth preplanned abatement strategies in the event of an emergency episode.

B. Required Information.

1. The emissions reduction schedule must have three (3) stages of reduction procedures: (1) alert level reduction; (2) warning level reduction; and (3) emergency level reduction.

2. Each level of reduction procedures must show the type and source of air contaminants, the amount of reduction of contaminants, the time required to reduce, and the manner in which reduction will be achieved.

C. The emissions reduction schedule shall be subject to review and approval by the Commission.

D. An unacceptable emissions reduction schedule shall be returned to the applicant along with the Commission's reasons for denial.

E. The applicant shall have not more than thirty (30) days to amend a disapproved emissions reduction schedule to conform with the emission reduction standards as set forth by the Commission.

F. Any person aggrieved by the requirements to amend an emissions reduction schedule shall be entitled to a hearing.

G. Should an applicant fail to submit an emissions reduction schedule within the allowable time period or fail to submit an amended preplanned strategy, the Commission will establish or revise said plan to cause it to meet the standards as set forth by the Commission.

H. Such established or revised preplanned strategies will thereafter be the preplanned strategies which the applicant will put into effect upon the issuance of an appropriate order by the Commission.

## XIII. EXCLUSIONS, VARIANCES, AND GENERAL PERMITS

A. Institutions of higher learning, federal facilities or affiliated state agencies engaged in research and development may be granted variances from and/or exemptions to certain specific sections of this Regulation (APC-S-2) (except for the requirement to obtain a permit) for the development, testing or demonstration of experimental facilities, operations or contrivances that emit or cause the emission of

air contaminants, provided formal written request is made to the Commission with sufficient data to support the experimental characteristics of said facility, operation or contrivance. The variances and/or exemptions granted pursuant to this section may not include major stationary sources, moderate stationary sources, major modifications, or moderate modifications.

B. General Permits. The Permit Board may issue general permits to construct and general permits to operate as described below to classes of articles, machines, equipment, or other contrivances. A general permit shall be issued for a period of time not to exceed five years.

1. The Permit Board may issue a general permit for facilities which, in the judgement of the Permit Board, cannot by their nature and design have emissions of any pollutants in sufficient quantity to cause individual impact on air quality. Coverage under a general permit issued in this manner will be automatic and will not require the submittal of an application or other request to secure coverage. Section XIII.B.1. is not applicable to general permits to construct moderate sources, general permits to construct moderate modifications, general permits to operate a synthetic minor source, or Title V Permits.

2. The Permit Board may issue a general permit for facilities which, in the judgement of the Permit Board, may have emissions in sufficient quantity to cause individual impact on air quality but which are minor. Coverage under a general permit issued in this manner will be determined by the staff pursuant to review of a request for general permit coverage from a facility seeking such coverage. A request for general permit coverage must contain the following:

   (a) the name and address of the owner and operator,

   (b) the address or description of the physical location to the facility,

   (c) a description of the facility, and

   (d) a certification that all Applicable Rules and Regulations will be complied with in the operation of the facility.

3. The Permit Board may deny coverage under a general permit to any facility and require the facility to obtain an individual permit.

4. The Permit Board may revoke and/or modify a general permit or coverage under a general permit.

5. The granting of coverage under a general permit does not imply or express exclusion from the requirements of any emission-limiting regulation.

6. Facilities which will be required to obtain coverage under a general permit to operate as a result of the deletion of the Air Emissions Permit Exclusion List (originally referenced in Section XIII.A.) shall not be required to submit a request for general permit coverage until six months following the date the general permit to operate is issued.

7. Facilities which will be required to obtain a State Permit to Operate as a result of the deletion of the Air Emissions Permit Exclusion List (originally referenced in Section XIII.A.) shall not be required to submit an application for such permit until six months following the date the Department decides that a general permit to operate will not be issued to cover the class of facilities to which the facility belongs.

## XIV. PERMIT TRANSFER

A. "Transfer" shall mean any sale, conveyance, or assignment of the rights held by the applicant in any permit issued pursuant to these Regulations. Any change of more than 50 percent of the equity ownership of the permit holder over a sustained period which results in a new majority owner shall constitute a transfer. A new majority owner for purposes of this provision shall be an individual, partnership, company, or group of affiliated companies.

B. A permit issued pursuant to these Regulations shall not be transferred except upon approval of the Permit Board.

C. When requested by the Permit Board, an applicant for transfer approval shall submit information to demonstrate that it has the financial resources, operational expertise and environmental compliance history over the last five years to insure compliance with the terms and conditions of the permit to be transferred except where this conflicts with State Law.

D. The application for approval of the transfer may be combined with an early application for permit renewal.

## XV. SEVERABILITY

If any provision, section, subsection, sentence, clause or phrase of any of these regulations, or the application of same to any person or set of circumstances is for any reason challenged or held to be invalid or void, the validity of the remaining regulations and/or portions thereof or their application to other persons or sets of circumstances shall not be affected thereby.

# AMBIENT AIR QUALITY STANDARDS

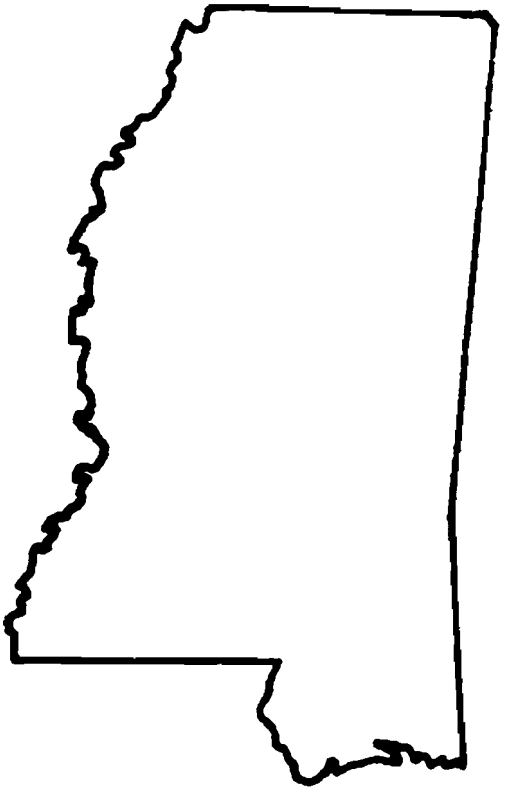

# STATE OF MISSISSIPPI

MISSISSIPPI DEPARTMENT OF ENVIRONMENTAL QUALITY
OFFICE OF POLLUTION CONTROL
P. O. Box 10385
Jackson, Mississippi 39289-0385

REGULATION APC-S-4
Amended June 22, 1988

## MISSISSIPPI COMMISSION ON ENVIRONMENTAL QUALITY

### AMBIENT AIR QUALITY STANDARDS

### APC-S-4

**Amended June 22, 1988**

Except for odor and total suspended particulates, as covered below, the ambient air quality standards for Mississippi shall be the Primary and Secondary National Ambient Air Quality Standards as duly promulgated by the U.S. Environmental Protection Agency in (or to be printed in) 40 CFR Part 50, pursuant to the Federal Clean Air Act, as amended. All such standards promulgated by the U.S. Environmental Protection Agency as of June 22, 1988, are hereby adopted and incorporated herein by the Commission by reference as the official ambient air quality standards of the State of Mississippi and shall hereafter be enforceable as such (except that the word "Administrator" in said standards shall be replaced by the words "Executive Director" and the word "Agency" in said standards shall be replaced by the word "Department").

There shall be no odorous substances in the ambient air in concentrations sufficient to adversely and unreasonably: (1) affect human health and well-being: (2) interfere with the use or enjoyment of property; or (3) affect plant or animal life. In determining that concentrations of such substances in the ambient air are adversely and unreasonably affecting human well-being or the use or enjoyment of property or plant or animal life, the factors to be considered by the Commission will include, without limiting the generality of the foregoing, the number of complaints or petitioners alleging that such a condition exists, the frequency of occurrence of such substances in the ambient air as confirmed by the Department of Environmental Quality staff, and the land use of the affected area.

The Mississippi ambient air quality standard for particulate matter, as measured by the EPA Reference Method for total suspended particulates or by an equivalent method, is 150 micrograms per cubic meter maximum 24-nour concentration not to be exceeded more than once per year.

STATE OF MISSISSIPPI
DEPT. OF ENVIRONMENTAL QUALITY
OFFICE OF POLLUTION CONTROL
P.O. BOX 10385
JACKSON, MS 39289-0385
(601) 961-5171

# APPLICATION FOR AIR POLLUTION CONTROL PERMIT TO CONSTRUCT AND/OR OPERATE AIR EMISSIONS EQUIPMENT

TYPE OF PERMIT

____New Source
____Modification
____Renewal of Operating Permit
____Existing Source Operating Permit

Name _____
Location: City _____ County _____
Facility No. (if known)_____

**APPLICATION FOR PERMIT TO CONSTRUCT**
**AND/OR OPERATE AIR EMISSIONS EQUIPMENT**
**GENERAL FORM**

1. Name, Address & Contact for the Owner/Applicant

   A. Name _____

   B. Mailing Address

      1. Street Address or P.O. Box _____
      2. City _____ 3. State _____
      4. Zip Code _____ 5. Telephone No. (  ) _____

   C. Contact

      1. Name _____ 2. Title _____

2. Name, Address, Location and Contact for the Facility

   A. Name _____

   B. Mailing Address

      1. Street Address or P.O. Box _____
      2. City _____ 3. State _____
      4. Zip Code _____ 5. Telephone No. (  ) _____

   C. Site Location

      1. Street _____
      2. City _____ 3. County _____
      4. State _____ 5. Zip Code _____
      6. Telephone No. (  ) _____

      Note: If the facility is located outside the City limits, please attach a sketch or description showing the approximate location to this application.

   D. Contact

      1. Name _____ 2. Title _____

3. SIC Code _____

4. Number of Employees _____

5. Principal Process(es) _____

6. Principal Product(s) and maximum amount produced per day _____

   _____

7. Principal Raw Materials and maximum amount consumed per day _____

   _____

8. Operating Schedule

A. Specify maximum hours per day the operation will occur: _____

B. Specify maximum days per week the operation will occur: _____

C. Specify maximum weeks per year the operation will occur: _____

D. Specify the months the operation will occur: _____

9. Only if this application is for Operating Permit renewal, has the facility been modified in any way (including production rate, fuel, and/or raw material changes) during period covered by the Operating Permit? ____Yes ___No If yes, give year(s) in which modification(s) occurred and explain.

_____

_____

10. If after August 7, 1977, provide the date construction commenced. _____

11. If after August 7, 1977, provide the date operation began. _____

12. Please list the dates of any modifications or emissions increases since August 7, 1977. _____

_____

_____

13. EACH APPLICATION MUST BE SIGNED BY THE APPLICANT.

If the applicant is a corporation, it must be signed by a corporate officer as defined in Regulation APC-S-2. If the applicant is a partnership, it must be signed by a partner with authority to bind the partnership. In the case of a governmental agency, the application must be signed by the facility manager or senior staff officer responsible for the installation's or facility's environmental compliance.

*I certify that I am familiar with the information contained in the application and that to the best of my knowledge and belief such information is true, complete, and accurate, and that, as an appropriate representative of the applicant, my signature shall constitute an agreement that the applicant assumes the responsibility for any alterations, additions or changes in operation that may be necessary to achieve and maintain compliance with all applicable Rules and Regulations.*

_____ _____

Printed Name of Person Signing Title

_____ _____

Date Application Signed Signature of Applicant

PLEASE COMPLETE THE FOLLOWING PAGES WHERE APPLICABLE

## GENERAL INFORMATION & INSTRUCTIONS

1) The application is designed to obtain information to allow evaluation of a number of different types of air emission facilities. If the space provided in the application is not adequate or does not fit your air emissions equipment, you may use a separate sheet(s) to provide the necessary information.

2) Permits will be valid only for those operations, pollutants, and pollutant emission rates identified in the application. As a minimum, the application must identify the following:

   A. All operations or equipment having air emissions. For each, specify the maximum schedule, the maximum operating rate and the expected operating rate, if different form the maximum.

   B. Emission rates (in units of the applicable emission standard as well as lbs/hr and tons/year) for each air pollutant subject to regulation under the Federal Act that can be reasonably expected to be emitted from each independent emission point. The following emission rates shall be provided in the EMISSIONS SUMMARY SECTION:

      1. Potential Uncontrolled Emissions - this emission rate is defined in Regulation APC-S-2, amended December 9, 1993.

      2. Proposed Emission Rate - the maximum emission rate at which the applicant proposes to operate the emission point.

      EMISSION RATE CALCULATIONS MUST BE PROVIDED.

   C. The exhaust or stack parameters for each emission source (height, velocity, diameter, and temperature) shall be provided in the EMISSIONS SUMMARY SECTION.

## APPLICATION FOR AIR POLLUTION CONTROL PERMIT
## ADDITIONAL INFORMATION REQUIRED FOR MODIFICATIONS, EXISTING SOURCE OPERATING PERMITS, AND/OR APPROVAL TO CONSTRUCT

The following additional information must be submitted in duplicate. Failure to submit any of the additional information or to conform to the instructions may result in initial rejection of the application.

1) Design Calculations and Specifications - all data and calculations used in selecting or designing process and control equipment.

2) Site Drawings - the drawing(s) or sketch(es) must be to scale and show at least the following:

   A. The property involved with dimensions, clearly defining restricted entry boundaries and, if different, the total property boundaries.

   B. Location and identification of all existing and/or proposed buildings, structures, and/or equipment, including points of discharge of air contaminants to the atmosphere, drawn to scale and in proper orientation.

   C. The dimensions (length, width) of all buildings, structures, and/or equipment, including emission points.

   D. The elevation of all buildings, structures, and/or equipment, including emission points, showing heights, grade baseline, and grade baseline height above mean sea level.

   E. Primary compass direction indicator.

F. Location of streets and all adjacent properties. Show location of all buildings outside the property that are within 150 feet of the equipment involved in the application. Identify all such buildings (as a residence, apartment, warehouse, etc.), specifying number of stories or approximate height, and indicate the prevailing wind direction.

3) Construction Drawings (See Note Below) - an assembly drawing, dimensioned and to scale, in as many sections as are needed to show clearly the design and operation of the equipment and the means by which air contaminants are controlled. The following must be shown:

A. Size and shape of equipment. Show exterior and interior dimensions and features.

B. Locations, sizes, and shape details of all features which may affect the production, collection, conveying or control of air contaminants of any kind; location, size and shape details concerning all materials handling equipment.

NOTE: Structural design calculations and details are not required.

4) Description of Process and Control Equipment - a written description of each process to be carried out in the facility and the function of the equipment used in the process. The descriptions must be complete and particular attention must be given to explaining all stages in the process where the discharge of any materials might contribute in any way to air pollution. Control procedures must be described in sufficient detail to show the extent of control of air contaminants anticipated in the design, specifying the expected efficiencies of the capture systems and the control devices. All obtainable data must be supplied concerning the nature, volumes, particle size, weights, chemical composition and concentrations of all types of air contaminants.

5) Block Flow Diagram - a drawing showing the steps of the process and the flow of materials through the process and any control devices.

Additional information may be required as is necessary to evaluate the design adequacy of the facility or to comply with the requirements of the Prevention of Significant Deterioration (PSD) regulations.

ALL ENGINEERING PLANS AND SPECIFICATIONS MUST BEAR THE SIGNATURE, REGISTRATION NUMBER, AND SEAL OF A PROFESSIONAL ENGINEER REGISTERED IN THE STATE OF MISSISSIPPI.

# EMISSIONS SUMMARY SECTION

## PART I

| STACK PARAMETERS | | | | | | | | |
|---|---|---|---|---|---|---|---|---|
| Reference Number | Stack Height (feet) | Inside Exit Dia. (feet) | Exit Gas Velocity (ft/sec) | Exit Gas Volume (acfm) | Exit Gas Temperature (oF) | Moisture Content (%) | U.T.M. Coordinates Zone _____ | |
| | | | | | | | East | North |
| | | | | | | | | |
| | | | | | | | | |
| | | | | | | | | |
| | | | | | | | | |
| | | | | | | | | |
| | | | | | | | | |
| | | | | | | | | |
| | | | | | | | | |
| | | | | | | | | |
| | | | | | | | | |
| | | | | | | | | |
| | | | | | | | | |
| | | | | | | | | |
| | | | | | | | | |

# EMISSIONS SUMMARY SECTION
# PART II

| Reference Number | Pollutant | PROPOSED EMISSION RATE | | | POTENTIAL UNCONTROLLED EMISSIONS | |
|---|---|---|---|---|---|---|
| | | See Footnote (1) | (lbs/hr) | (TPY) | (lbs/hr) | (TPY) |
| | | | | | | |
| | | | | | | |
| | | | | | | |
| | | | | | | |
| | | | | | | |
| | | | | | | |
| | | | | | | |
| | | | | | | |
| | | | | | | |
| | | | | | | |
| | | | | | | |
| | | | | | | |
| | | | | | | |
| | | | | | | |
| | | | | | | |
| | | | | | | |
| | | | | | | |
| | | | | | | |
| | | | | | | |
| | | | | | | |

(1) Provide emission rate in units of applicable emission standard, e.g., lb/MMBTU, gr/dscf at 12% $CO_2$, etc. This may not apply to every emission point or every pollutant from an emission point.

(2) Please provide the total emissions from the facility by pollutant.

# EMISSIONS SUMMARY SECTION
# PART III

| CAS NO. | HAP | Proposed Emission Rate | | Potential Uncontrolled Emission Rate | |
|---|---|---|---|---|---|
| | | lbs/hr | TPY | lbs/hr | TPY |
| 75070 | Acetaldehyde | | | | |
| 60355 | Acetamide | | | | |
| 75058 | Acetonitrile | | | | |
| 98862 | Acetophenone | | | | |
| 53963 | Acetylaminofluorene(2) | | | | |
| 107028 | Acrolein | | | | |
| 79061 | Acrylamide | | | | |
| 79107 | Acrylic Acid | | | | |
| 107131 | Acrylonitrile | | | | |
| 107051 | Allyl Chloride | | | | |
| 92671 | Aminodipheyl(4) | | | | |
| 62533 | Aniline | | | | |
| 90040 | Anisidine(o) | | | | |
| 7440360 | Antimony Compounds | | | | |
| 7440382 | Arsenic Compounds (inorganic including arsine) | | | | |
| 1332214 | Asbestos | | | | |
| 71432 | Benzene | | | | |
| 92875 | Benzidine | | | | |

| CAS NO. | HAP | Proposed Emission Rate | | Potential Uncontrolled Emission Rate | |
|---|---|---|---|---|---|
| | | lbs/hr | TPY | lbs/hr | TPY |
| 98077 | Benzotrichloride | | | | |
| 100447 | Benzyl Chloride | | | | |
| 7440417 | Beryllium Compounds | | | | |
| 192524 | Biphenyl | | | | |
| 117817 | Bis(2-ethhylhexyl)phthalate (DEHP) (Dioctyl Phthalate) | | | | |
| 542881 | Bis(chloromethyl)ether | | | | |
| 75252 | Bromoform | | | | |
| 106990 | Butadiene(1,3) | | | | |
| 7440439 | Cadmium Compounds | | | | |
| 156627 | Calcium Cyanamide | | | | |
| 105602 | Caprolactam | | | | |
| 133062 | Captan | | | | |
| 63252 | Carbaryl | | | | |
| 75150 | Carbon Disulfide | | | | |
| 56235 | Carbon Tetrachloride | | | | |
| 463581 | Carbonyl Sulfide | | | | |
| 120809 | Catechol | | | | |
| 133904 | Chloramben | | | | |
| 57749 | Chlordane | | | | |

| CAS NO. | HAP | Proposed Emission Rate | | Potential Uncontrolled Emission Rate | |
|---|---|---|---|---|---|
| | | lbs/hr | TPY | lbs/hr | TPY |
| 7782505 | Chlorine | | | | |
| 79118 | Chloroacetic Acid | | | | |
| 532274 | Chloroacetophenone(2) | | | | |
| 108907 | Chlorobenzene | | | | |
| 510156 | Chlorobenzinate | | | | |
| 67663 | Chloroform | | | | |
| 107302 | Chloromethyl methyl ether | | | | |
| 126998 | Chloroprene (Neoprene; 2-Chloro-1,3-Butadiene) | | | | |
| 7440473 | Chromium Compounds (IV) | | | | |
| 10210681 | Cobalt Carbonyl (as Co) | | | | |
| 7440484 | Cobalt Compounds (metal, dust, and fumes as Co) | | | | |
| 16842038 | Cobalt Hydrocarbonyl (as Co) | | | | |
| 65996818A | Coke Oven Emissions | | | | |
| 1319773 | Cresols/Cresylic acid | | | | |
| 108394 | Cresol(m) | | | | |
| 95487 | Cresol(o) | | | | |
| 106445 | Cresol(p) | | | | |
| 98828 | Cumene (Isopropylbenzene) | | | | |

| CAS NO. | HAP | Proposed Emission Rate | | Potential Uncontrolled Emission Rate | |
|---|---|---|---|---|---|
| | | lbs/hr | TPY | lbs/hr | TPY |
| — | Cyanide Compounds (NOTE # 1) | | | | |
| 3547044 | DDE | | | | |
| 334883 | Diazomethane | | | | |
| 132649 | Dibenzofurans | | | | |
| 96128 | Dibromo-3-chloropropane(1,2) | | | | |
| 84742 | Dibutylphthalate | | | | |
| 106467 | Dichlorobenzene(1,4)(p) | | | | |
| 91941 | Dichlorobenzidene(3,3) | | | | |
| 111444 | Dichloroethyl ether (Bis(2-chloroehtyl)ether) | | | | |
| 542756 | Dichloropropene(1,3) | | | | |
| 62737 | Dichlorvos | | | | |
| 111422 | Diethanolamine | | | | |
| 121697 | Diethyl aniline (N,N) (dimethylaniline (N,N)) | | | | |
| 64675 | Diethyl Sulfate | | | | |
| 119904 | Dimethoxybenzidine(3,3') | | | | |
| 60117 | 4 - Dimethyl aminoazobenzene | | | | |
| 119937 | Dimethyl benzidine (3,3') | | | | |
| 79447 | Dimethyl carbamoyl chloride | | | | |

| CAS NO. | HAP | Proposed Emission Rate | | Potential Uncontrolled Emission Rate | |
|---|---|---|---|---|---|
| | | lbs/hr | TPY | lbs/hr | TPY |
| 68122 | Dimethyl formamide | | | | |
| 57147 | Dimethyl hydrazine(1,1) | | | | |
| 131113 | Dimethyl phthalate | | | | |
| 77781 | Dimethyl sulfate | | | | |
| 534521 | Dinitro-o-cresol(4,6), and salts | | | | |
| 51285 | Dinitrophenol(2,4) | | | | |
| 121142 | Dinitrotoluene(2,4) | | | | |
| 123911 | Dioxane(1,4) (1,4-diethyleneoxide) | | | | |
| 122667 | Diphenylhydrazine(1,2) | | | | |
| 94757 | d(2,4), salts and esters | | | | |
| 106898 | Epichlorohydrin (Chloro-2,3-epoxypropane(1)) | | | | |
| 106887 | Epoxybutane(1,2) (1,2-Butylene oxide) | | | | |
| 140885 | Ethyl acrylate | | | | |
| 100414 | Ethyl benzene | | | | |
| 51796 | Ethyl carbamate (Urethane) | | | | |
| 75003 | Ethyl chloride (Chloroethane) | | | | |
| 106934 | Ethylene dibromide (1,2-Dibromoethane) | | | | |

| CAS NO. | HAP | Proposed Emission Rate | | Potential Uncontrolled Emission Rate | |
|---|---|---|---|---|---|
| | | lbs/hr | TPY | lbs/hr | TPY |
| 107062 | Ethylene dichloride (1,2-Dichloroethane) | | | | |
| 107211 | Ethylene glycol | | | | |
| 151564 | Ethylene imine (Azridine) | | | | |
| 75218 | Ethylene oxide | | | | |
| 96457 | Ethylene thiourea | | | | |
| 75343 | Ethylidene dichloride (1,1-Dichloroethane) | | | | |
| 50000 | Formaldehyde | | | | |
| — | Glycol ethers (NOTE #2) | | | | |
| 76448 | Heptachlor | | | | |
| 118741 | Hexachlorobenzene | | | | |
| 87683 | Hexachlorocyclopentadiene | | | | |
| 67721 | Hexachloroethane | | | | |
| 822060 | Hexamethylene-1,6-diisocyanate | | | | |
| 680319 | Hexamethylphosphoramide | | | | |
| 110543 | Hexane | | | | |
| 302012 | Hydrazine | | | | |
| 7647010 | Hydrochloric acid | | | | |
| 7664393 | Hydrogen Fluoride (Hydrofluoric acid) | | | | |

| CAS NO. | HAP | Proposed Emission Rate | | Potential Uncontrolled Emission Rate | |
|---|---|---|---|---|---|
| | | lbs/hr | TPY | lbs/hr | TPY |
| 123319 | Hydroquinone | | | | |
| 78591 | Isophorone | | | | |
| 7439921 | Lead Compounds | | | | |
| 58899 | Lindane (all isomers) | | | | |
| 108316 | Maleic anhydride | | | | |
| 7439965 | Manganese Compounds | | | | |
| 7439976 | Mercury Compounds | | | | |
| 67561 | Methanol | | | | |
| 72435 | Methoxychlor | | | | |
| 74839 | Methyl bromide (Bromomethane) | | | | |
| 74873 | Methyl chloride (Chloromethane) | | | | |
| 71556 | Methyl chloroform (1,1,1-Trichloroethane) | | | | |
| 78933 | Methyl ehtyl ketone (2-Butanone) (MEK) | | | | |
| 60344 | Methyl hydrazine | | | | |
| 74884 | Methyl iodide (Iodomethane) | | | | |
| 108101 | Methyl isobutyl ketone (Hexone) | | | | |
| 624839 | Methyl isocyanate | | | | |

| CAS NO. | HAP | Proposed Emission Rate | | Potential Uncontrolled Emission Rate | |
|---|---|---|---|---|---|
| | | lbs/hr | TPY | lbs/hr | TPY |
| 80626 | Methyl methacrylate | | | | |
| 1634044 | Methyl tert butyl ether | | | | |
| 101144 | Methylene bis(2-chloroaniline)(4,4) (MOCA) | | | | |
| 75092 | Methylene chloride (Dichloromethane) | | | | |
| 101688 | Methylene diphenyl diisocynate (MDI) | | | | |
| 101779 | Methylenedianiline(4,4') | | | | |
| — | Mineral fibers (NOTE #3) | | | | |
| 91203 | Naphthalene | | | | |
| 7440020 | Nickel Compounds | | | | |
| 7440020 | Nickel, refinery dust | | | | |
| 12035722 | Nickel, subsulfide | | | | |
| 98953 | Nitrobenzene | | | | |
| 92933 | Nitrodiphenyl(4) | | | | |
| 100027 | Nitrophenol(4) | | | | |
| 79469 | Nitropropane(2) | | | | |
| 62759 | Nitrosodimethylamine(N) (Dimethylnitrosoamine) | | | | |
| 59892 | Nitrosomorpholine(N) | | | | |
| 684935 | Nitroso-N-methylurea(N) | | | | |

| CAS NO. | HAP | Proposed Emission Rate | | Potential Uncontrolled Emission Rate | |
|---|---|---|---|---|---|
| | | lbs/hr | TPY | lbs/hr | TPY |
| 56382 | Parathion | | | | |
| 82688 | Pentachloronitrobenzene (Quintobenzene) | | | | |
| 87865 | Pentachlorophenol | | | | |
| 108952 | Phenol | | | | |
| 106503 | Phenylenediamine(p) | | | | |
| 75445 | Phosgene | | | | |
| 7803512 | Phosphine | | | | |
| 7723140 | Phosphorus | | | | |
| 85449 | Phthalic anhydride | | | | |
| 1336363 | Polychlorinated biphenyls (Arochlors) | | | | |
| — | Polycylic Organic Matter (NOTE #5) | | | | |
| 1120714 | Propane sultone(1,3) | | | | |
| 57578 | Propiolactone(beta) | | | | |
| 123386 | Propionaldehyde | | | | |
| 114261 | Propoxur (Baygon) | | | | |
| 78875 | Propylene dichloride (1,2 dichloropropane) | | | | |
| 75558 | Propylene imine(1,2) (2-methyl aziridine) | | | | |
| 75569 | Propylene oxide | | | | |

| CAS NO. | HAP | Proposed Emission Rate | | Potential Uncontrolled Emission Rate | |
|---|---|---|---|---|---|
| | | lbs/hr | TPY | lbs/hr | TPY |
| 91225 | Quinoline | | | | |
| 106514 | Quinone (1,4-Cyclohexadienedione) | | | | |
| — | Radionuclides (including radon) (NOTE #4) | | | | |
| 7782492 | Selenium Compounds | | | | |
| 100425 | Styrene | | | | |
| 96093 | Styrene oxide | | | | |
| 1746016 | Tetrachlorodibenzo-p-dioxin(2,3,7,8) (TCDD) (Dioxin) | | | | |
| 79345 | Tetrachloroethane(1,1,2,2) | | | | |
| 127184 | Tetrachloroethylene (Perchloroethylene) | | | | |
| 7550450 | Titanium Tetrachloride | | | | |
| 108883 | Toluene | | | | |
| 95807 | Toluene diamine(2,4) (2,4-diaminotoluene) | | | | |
| 584849 | Toluene diisocyanate(2,4) | | | | |
| 95534 | Toluidine(o) | | | | |
| 8001352 | Toxaphene (Chlorinated camphene) | | | | |
| 120821 | Trichlorobenzene(1,2,4) | | | | |
| 79005 | Trichloroethane(1,1,2) | | | | |

| CAS NO. | HAP | Proposed Emission Rate | | Potential Uncontrolled Emission Rate | |
|---|---|---|---|---|---|
| | | lbs/hr | TPY | lbs/hr | TPY |
| 79016 | Trichloroethylene | | | | |
| 95954 | Trichlorophenol(2,4,5) | | | | |
| 88062 | Trichlorophenol(2,4,6) | | | | |
| 121448 | Triethylamine | | | | |
| 1582098 | Trifluralin | | | | |
| 540841 | Trimethylpentane(2,2,4) | | | | |
| 75014 | Vinyl Chloride | | | | |
| 108054 | Vinyl Acetate | | | | |
| 593602 | Vinyl Bromide | | | | |
| 75354 | Vinylidene chloride (1,1-Dichloroethylene) | | | | |
| 1330207 | Xylenes (mixed) | | | | |
| 108383 | Xylene(m) | | | | |
| 95476 | Xylene(o) | | | | |
| 106423 | Xylene(p) | | | | |

NOTE # 1: X'CN where X = H' or any other group where a formal dissociation may occur, for example: KCN or Ca(CN)2.

NOTE # 2: Includes mono- and di- ethers of ethylene glycol, dietheylene glycol and triethylene glycol R-(OCH2CH2)n-OR' where:

n = 1,2,3
R = alkyl or arl groups
R' = R,H, or group which, when removed, yield glycols ethers with the structure: R-(OCH2CH2)n-OH. Polymers are excluded from the glycol category

NOTE # 3: Includes glass microfibers, glass wool fibers, rock wool fibers, and slag wool fibers, each characterized as "respirable" (fiber diameter less then 3.5 micrometers) and possessing an aspect ratio (fiber length divided by fiber diameter) greater than 3.

NOTE # 4: A type of atom which spontaneously undergoes radioactive decay.

NOTE # 5: Includes organic compounds with more than one benzene ring, and which have a boiling point greater than or equal to 100 Celsius.

## APPLICATION SUMMARY SECTION

I. Indicate below which sections have been completed as part of this application. Where applicable, also indicate the number of each section completed.

Administrative Information _____

Emission Summary Section
- Part I _____
- Part II _____
- Part III _____

Fuel Burning Equipment _____

Manufacturing Process Operations _____

Refuse Disposal _____

Tank Section _____

Incineration Section _____

Asphalt Plant Section _____

Concrete Plant Section _____

Air Pollution Control Devices _____

- Baghouse _____
- Cyclone _____
- Adsorption _____
- Afterburner _____
- Scrubber _____
- Electrostatic Precipitator _____
- Other Air Pollution Control Equipment/Devices _____

II. Please list any other attachments.

_____

_____

## FOR ALL APPLICANTS

### FUEL BURNING EQUIPMENT
### (Except for Refuse Disposal)

This form has 3 pages; each is a continuation of the equipment information from the page before. Please fill in as completely as possible, listing all fuel burning equipment. Reasons should be given explaining any data not filled in.

**PAGE 1**

1. Fill in company name and address, plus year for which data is given (if existing facility) at top of page. Use data for most recent calendar year available.

2. Reference Number. Use an identifying number for each boiler, furnace, kiln, etc., and use the same reference number on each of the three pages to identify information for the same unit.

3. Manufacturer and Model Number. Nameplate data for boiler, furnace, kiln, etc. Waste gas flares and stationary internal combustion engines should also be included on this form.

4. Rated Capacity in Millions of BTU per hour.

5. Type of Burner Unit. Use Codes (1*) at bottom of form. If not listed put (11) and specify.

6. Usage. Type of fuel burning equipment. Use codes (2*) at bottom of form. If not listed put (5) and specify.

7. Heat Usage. Percent of heat used for process and percent for space heating.

**PAGE 2**

8. Reference Number. Continue reference numbers from Page 1, using same number to identify information for same unit.

9. Fuel Data
   Fuel Type. Coal, Gas, #2 Oil, #6 Oil, etc.
   Maximum Capacity burned per hour. Gallons, pounds, cubic feet, etc.
   Specify. Average amount burned per year. Gallons, tons, million cubic feet, etc.
   Specify. Heat Content of Fuel. BTU per gallon, pound, cubic foot, etc.
   Specify. Average Percent Sulfur Content.
   Specify. Average Percent Ash Content
   (If percent sulfur and percent ash are not known, list fuel type and supplier's name at bottom of page in spaces provided so that information may be obtained.)

**PAGE 3**

10. Reference Number. Use same numbers as on Pages 1 and 2 to identify information for same unit.

11. Air Pollution Control Equipment.

    Manufacturer and Model Number. Information from nameplate. Type. Use Table 1. Efficiency. Percent design control on pollutants and actual percent control if known.

Per_Spe.GLP
mlv.11.94

| 1. FACILITY NAME | ADDRESS | | For Agency Use Only |
|---|---|---|---|
| | | | |
| FACILITY NUMBER | Information for Calendar Year | DATE | |
| | | | |

| 2 | 3 | 4 | 5 | 6 | 7 | |
|---|---|---|---|---|---|---|
| Reference Number | Manufacturer & Model Number | Rated Capacity $10^6$ BTU/hr | Type of Burner Unit (Use Code 1*) | Usage (Use Code 2*) | Most Usage | |
| | | | | | % Process | % Space Heat |
| | | | | | | |
| | | | | | | |
| | | | | | | |
| | | | | | | |
| | | | | | | |

1*BURNER CODES

1. Cyclone Furnace
2. Pulverized Coal
3. Spreader Stoker
4. Hand Fired
5. Other Stoker (Specify)
6. Multiple Port Gas
7. Forced Draft Gas
8. Atomizing Oil (Air)
9. Atomizing Oil (Mechanical)
10. Rotary Cup Oil
11. Others (Specify)

2*USAGE CODES

1. Boiler, Steam
2. Boiler, Other (Specify)
3. Air Heating for Space Heating
4. Air Heating for Process Usage
5. Others (Specify)

| FUEL BURNING EQUIPMENT | | | | | | Page 2 |
|---|---|---|---|---|---|---|
| Fuel Data | | | | | | |
| Reference Number | Fuel Type | Maximum Amount Per Hour (Specify Units) | Amount Per Year (Specify Units) | Heat Content BTU/Gal, etc. (Specify Units) | Percent Sulfur | Percent Ash |
| | | | | | | |
| | | | | | | |
| | | | | | | |
| | | | | | | |
| | | | | | | |
| | | | | | | |
| | | | | | | |
| | | | | | | |
| | | | | | | |
| | | | | | | |
| | | | | | | |

FUEL SUPPLIERS:

| Fuel Type | Supplier |
|---|---|
| | |
| | |
| | |
| | |
| | |
| | |

| FUEL BURNING EQUIPMENT | | | | Page 3 |
|---|---|---|---|---|
| 11 Reference Number | 12 Air Pollution Control Equipment | | | |
| | Manufacturer & Model Number | Type (Use Table 1) | Efficiency Design | Actual |
| | | | | |
| | | | | |
| | | | | |
| | | | | |
| | | | | |
| | | | | |
| | | | | |
| | | | | |
| | | | | |
| | | | | |
| | | | | |
| | | | | |
| | | | | |
| | | | | |
| | | | | |

**You must complete the appropriate page in the Air Pollution Control Devices Section.**

Per_Spe.GLP
mlv.11.94

## MANUFACTURING PROCESS OPERATIONS
### Page 1

1. Company Name and Address, plus year for which information is given (if existing facility) at top of page. Use data for most recent calendar year available.

2. Reference Number. Use an identifying number for each manufacturing process which emits matter to the air and use the same number of all three pages of this form to identify information for the same operation.

3. Process or Unit Operation Name. Identify the unit or process section for which information is given by name.

4. Rated Process Capacity. Give in tons per hour and the maximum rated capacity of the process or unit identified, wet weight.

5. Feed Input. Process rate in wet tons per hour and wet tons per year of materials fed to the operation.

6. Number of Emission Points to Air. Number of stacks, vents, etc., which emit materials to air.

7. Product Output. Product rate in wet tons per hour and wet tons per year from the operation.

### Page 2

8. Reference Number. Use same number as on Page 1 of form to identify information for same process or operation.

9. Air Pollution Control Equipment
   Manufacturer and Model Number. Nameplate Data.
   Type. Use Table 1. Collection efficiency. Design and actual collection efficiency if known.

| COMPANY NAME | ADDRESS | | For Agency Use Only |
|---|---|---|---|
| | | | |
| FACILITY NUMBER | Information for Calendar Year | DATE | |
| | | | |

| Reference Number | Process or Unit Operation Name | Rated Process Capacity Tons/Hour | Feed Input* | | Number of Emission Points to Air | Product Output* | |
|---|---|---|---|---|---|---|---|
| | | | Quantity Per Hour | Quantity Per Year | | Quantity Per Hour | Quantity Per Year |
| | | | | | | | |
| | | | | | | | |
| | | | | | | | |
| | | | | | | | |
| | | | | | | | |
| | | | | | | | |
| | | | | | | | |

* Specify Units of Measure Used

| MANUFACTURING PROCESS OPERATIONS | | | | Page 2 |
|---|---|---|---|---|
| Reference Number | Air Pollution Control Equipment | | | |
| | Manufacturer and Model Number | Type (Use Table 1) | Collection Efficiency | |
| | | | Design | Actual |
| | | | | |
| | | | | |
| | | | | |
| | | | | |
| | | | | |
| | | | | |
| | | | | |
| | | | | |
| | | | | |
| | | | | |
| | | | | |
| | | | | |
| | | | | |
| | | | | |
| | | | | |

**You must complete the appropriate page in the Air Pollution Control Devices Section.**

## FOR ALL APPLICANTS

### REFUSE DISPOSAL

A. Company Name & Address plus year for which information is given if for renewal of permit, at top of page.

B. Type Waste. Describe type of waste materials (paper, garbage, wood crates, sawdust, coal refuse, etc.).

C: Maximum amount per day in pounds.

D. Average amount per year in tons.

E. Method of Disposal. Use codes at bottom of Form (1*).

| REFUSE DISPOSAL | | |
|---|---|---|
| A Company Name | Information for Year | (Agency Use Only) |
| | | |
| Address | Date | |
| | | |

| B | C | D | E |
|---|---|---|---|
| Description of Waste Materials | Maximum Amount Per day (Pounds) | Amount Per Year (Tons) | Method of Disposal 1* |
| | | | |
| | | | |
| | | | |
| | | | |
| | | | |

1* Disposal Method Codes
1. Landfill on site
2. Landfill off site
3. Incinerator (complete Incinerator Section)
4. Burned in Boiler or Furnace
5. Other (Specify)

# TANK SUMMARY (page 1 of 2) SECTION H

1. Emission Point No./Name: _____

2. Was this tank constructed or modified after August 7, 1977? _____ yes _____ no

   If yes please give date and explain. _____

3. Product Stored: _____
   If more than one product is stored, provide the information in 4 A-E for each product.

4. Tank Data:

   A. True Vapor Pressure at storage temperature: _____ psia/°F
   B. Reid Vapor Pressure at storage temperature: _____ psia/°F
   C. Density of product at storage temperature: _____ lb/gal
   D. Molecular Weight of product vapor at storage temperature: _____ lb/lbmol
   E. Throughput for most recent calendar year: _____ gal/yr
   F. Tank Capacity: _____ gal
   G. Tank Diameter: _____ feet
   H. Tank Height / Length: _____ feet
   I. Average Vapor Space Height: _____ feet
   J. Tank Orientation: _____ Vertical or Horizontal
   K. Type of Roof: _____ Dome or Cone
   L. Is the Tank Equipped with a Vapor Recovery System? _____Yes _____No
      If Yes, describe on separate sheet of paper and attach. Indicate efficiency.
   M. Check the Type of Tank:
      _____ Fixed Roof _____ External Floating Roof
      _____ Pressure _____ Internal Floating Roof
      _____ Variable Vapor Space
      _____ Other, describe: _____
   N. Check the Closest City:
      _____ Jackson, Ms. _____ Birmingham, Al.
      _____ Memphis, Tn. _____ Montgomery, Al.
      _____ New Orleans, La. _____ Baton Rouge, La.
   O. Check the Tank Paint Color:
      _____ Aluminum Specular _____ Gray Light
      _____ Aluminum Diffuse _____ Gray Medium
      _____ Red _____ White
      _____ Other, describe: _____
   P. Tank Paint Condition: _____ Good or Poor
   Q. Check Type of Tank Loading
      1. Trucks and Rail Cars
         _____ Submerged Loading of clean cargo tank
         _____ Submerged Loading : Dedicated Normal Service
         _____ Submerged Loading : Dedicated Vapor Balance Service
         _____ Splash Loading of clean cargo tank
         _____ Splash Loading : Dedicated Normal Service
         _____ Splash Loading : Dedicated Vapor Balance Service
      2. Marine Vessels
         _____ Submerged Loading: Ships
         _____ Submerged Loading: Barges

R. For External Floating Roof Tanks

1. Check the Type of Tank Seal:

Mechanical Shoe

_____ Primary Seal Only

_____ With Shoe-Mounted Secondary Seal

_____ With Rim-Mounted Secondary Seal

Liquid Mounted Resilient Seal

_____ Primary Seal Only

_____ With Shoe-Mounted Secondary Seal

_____ With Rim-Mounted Secondary Seal

Vapor Mounted Resilient Seal

_____ Primary Seal Only

_____ With Shoe-Mounted Secondary Seal

_____ With Rim-Mounted Secondary Seal

2. Type of External Floating Roof: _____ Pontoon

_____ Double-Deck

S. For Internal Floating Roof Tanks

1. Check the Type of Tank Seal:

Liquid Mounted Resilient Seal

_____ Primary Seal Only

_____ With Rim-Mounted Secondary Seal

Vapor Mounted Resilient Seal

_____ Primary Seal Only

_____ With Rim-Mounted Secondary Seal

2. Number of Roof Columns: _____

3. Length of Deck Seam _____ feet:

4. Area of Deck: _____ $feet^2$

5. Effective Column Diameter: _____ feet

6. Check the Type of Tank:

_____ Bolted with Column Supported Roof

_____ Welded with Column Supported Roof

_____ Bolted with Self-Supported Roof

_____ Welded with Self-Supported Roof

5. Emissions Summary

1. Breathing Loss: _____ lb/hr _____ TPY

2. Working Loss: _____ lb/hr _____ TPY

3. Total Emissions: _____ lb/hr _____ TPY

6. UTM Coordinates:

A. Zone _____ B. North _____ C. East _____

# SOLID WASTE INCINERATORS (page 1 of 1) SECTION I

1. Manufacturers Information:
   A. Manufacturer Name: _____
   B. Model Number: _____
   C. Rated Capacity (tons/hour): _____
   D. Type and amount of Waste per year: _____

2. Was this unit constructed or modified after August 7, 1977? _____ yes _____ no
   If yes please give date and explain_____
   _____

3. Type of Incinerator: _____ Single Chamber _____ Multiple Chamber
   _____ Other, describe: _____

4. Auxiliary Equipment:

   A. Primary Burner:
      1. Fuel (Type): _____
      2. Btu/hr rating: _____
   B. Secondary Burner
      1. Fuel (Type): _____
      2. Btu/hr rating: _____
   C. Give Sulfur Content if Fuel Oil is Burned: _____ %
   D. Barometric Damper: _____
   E. Guillotine Damper: _____
   F. Other, specify: _____

5. Combustion Air: _____ Natural Draft _____ Induced Draft
   _____ Forced Draft _____ Starved Air
   _____ Other, specify: _____

6. Waste Feed Method: _____ Flue Fed _____ Chute Fed
   _____ Continuous Direct _____ Batch Direct

7. Operating Schedule:

   A. Hours per Day: _____ Days per week: _____

   B. From: _____ To: _____
      (time) (time)

   C. Circle the applicable days: M T W T F S S

8. Percent (%) $CO_2$ in exit gas _____

9. Does this emission point have air pollution control equipment? _____ Yes _____No
   If Yes, please complete the applicable Air Pollution Control Data Sheet found in Section L.

1. Emission Point No./Name: _____

2. Manufacturers Name and Model No.: _____

3. Date Plant Manufactured: _____

4. Was this unit constructed or modified after August 7, 1977? _____ yes _____ no
If yes please give date and explain _____

5. Type of Plant: _____ Batch _____ Continuous _____ Drum

6. Production:
   A. Rated capacity of dryer: _____ tons/hour
   B. Normal maximum rate: _____ tons/hour
   C. Annual: _____ tons

7. Dryer: Length: _____ feet Diameter: _____ feet

8. Burner:
   A. Manufacturers name and Model No.: _____
   B. Rated capacity: _____ Btu/hour
   C. Primary fuel
      1. _____ Gas _____ Oil Other (specify): _____
      2. Consumption:
         a. Gas: _____ $ft^3$/hour
         b. Oil: _____ gal/hour
         c. Other (specify units) _____
      3. Heat Value
         a. Gas: _____ Btu/ $ft^3$
         b. Oil: _____ Btu/gal
         c. Other (specify units) _____
      4. Sulfur content: _____ % S
      5. Ash content: _____ % ash
      6. Density of fuel oil (if applicable): _____ $lb/ft^3$
   D. Auxiliary fuel
      1. _____ Gas _____ Oil _____ Other (specify): _____
      2. Consumption:
         a. Gas: _____ $ft^3$/hour
         b. Oil: _____ gal/hour
         c. Other (specify units) _____
      3. Heat Value
         a. Gas: _____ Btu/ $ft^3$
         b. Oil: _____ Btu/gal
         c. Other (specify units) _____
      4. Sulfur content: _____ % S
      5. Ash content: _____ % ash
      6. Density of fuel oil (if applicable): _____ $lb/ft^3$

9. Does this emission point have air pollution control equipment? _____ Yes _____ No
If Yes, please complete the applicable Air Pollution Control Data Sheet found in Section L.

10. Miscellaneous:
    A. Are the shaker screens hooded and vented to air emission control systems: Yes / No
    B. Are the hot elevator and bins vented to the air emission control system: Yes / No
    C. Are in-plant roads: _____ Water-sprinkled
    _____ Oiled
    _____ Paved
    _____ Other, describe:_____

11. Does this facility operate a rockcrusher? _____Yes _____No
    If yes, attach a diagram of the operation and list the capacity and date of construction for each crusher, screener, and conveyer.

1. Emission Point No./Name: _____

2. Was this unit constructed or modified after August 7, 1977? _____ yes _____ no
If yes please give date and explain _____

3. What type of batching will be accomplished:
   _____ Wet (Rotary mixing trucks)
   _____ Dry (Flat bed trucks with segregated material compartments)
   _____ Central Mix (Batching at plant site)

4. Plant Production Rate: _____ $yd^3$/hr
   _____ tons/hour

5. Will the sand and aggregate be washed before delivery to your facility:
   _____ Yes _____ No

6. Explain the method of moving aggregate from storage piles to storage bins located above aggregate hopper: _____

7. Will water sprays be used at the following locations:
   A. Stockpiles: _____ Yes _____ No
   B. Aggregate Bins _____ Yes _____ No
   C. Conveyor Transfer Points _____ Yes _____ No

8. Cement Silo Information:
   A. How many cement silos will this plant use: _____
   B. What is the volume of each silo: _____ $yd^3$
   C. Explain method of loading cement silo: _____
   D. Is the silo Compartmented: _____ Yes _____ No
   E. If compartmented, what is the maximum number of cement trucks used to fill one compartment at any one time: _____
   F. If non-compartmented, what is the maximum number of cement trucks used to fill the silo at any one time: _____
   G. What type of dust control device will be used on the silo vent: _____

9. The cement hopper will be vented to the:
   _____ cement silo
   _____ cement silo baghouse
   _____ if neither,
   where: _____

10. In-plant roads will be:
   _____ paved
   _____ oil-coated
   _____ water sprinkled

11. Raw materials input to plant:
   A. Sand _____ $yd^3$ _____ tons/hour
   B. Rock _____ $yd^3$ _____ tons/hour
   C. Cement _____ $yd^3$ _____ tons/hour

12. Will the batch drop point to the truck or central mixer be controlled to prevent dust emissions:
_____ Yes _____ No

A. If a shroud with exhaust air suction is to be used, submit the following:
1. Manufacturer Name & Model No.: _____
2. Shroud area: _____ $ft^3$
3. CFM associated with suction pick-up of dust: _____ cfm
4. Attach baghouse air pollution control form in Section L.

B. If other type of control device is used, explain in detail: _____

_____

13. If your facility has an air pollution control device, please complete the applicable Air Pollution Control Data Sheet found in Section L.

1. If the air pollution control device is different from the attached forms, then submit drawings, specifications, manufacturers data, etc.

2. Fill out one form for each air pollution control device and attach to the appropriate emission point description form.

## BAGHOUSES SECTION L1

1. Emission Point No. / Name : _____

2. Manufacturers Name & Model No.: _____

3. Date of construction for existing sources or date of anticipated start-up for new sources:

_____

4. Baghouse Data:
   a) Cloth area: _____ $ft^2$
   b) Air to cloth ratio: _____ $acfm/ft^2$
   c) Type of bag: _____ Woven _____ Felted _____ Membrane _____ Other: _____
   d) Bag material: _____
   e) No. of bags: _____
   f) No. of compartments: _____
   g) Bag length: _____ ft
   h) Bag diameter: _____ ft
   i) Pressure drop: _____ inches $H_2O$
   j) Pressure measurement device installed: _____ Yes _____ No
   k) Air flow: _____ acfm @_____ °F
   l) Efficiency: _____ %
   m) Dirty air on: _____ inside _____ outside of bag
   n) Time between bag cleaning: _____ sec., min., hrs.
   o) Method of bag cleaning: _____ Shaking _____ Reverse Air _____ Pulse Jet _____ Other: _____
   p) Are extra bags readily available: _____ Yes _____ No How Many? _____
   q) How is the collected dust stored, handled, disposed of? _____

5. Which process(es) does the baghouse control emissions from? _____

1. Emission Point No. / Name: _____

2. Manufacturers Name and Model No.: _____

3. Date of construction for existing sources or date of anticipated start-up for new sources:

_____

4. Cyclone Data:

a) Cyclone type ( if more than 1, put total number ) :

_____ Simple _____ Potbellied

_____ High Efficiency _____ Multiclone

b) Efficiency: _____ %

c) Pollutant viscosity: _____ poise

d) Flow Rate: _____ acfm

e) Pollutant size entering cyclone: _____ microns

f) Pressure drop: _____ inches $H_2O$

g) Baffles or Louvers (specify): _____

h) Cyclone dimensions:

Inlet: _____ ft

Outlet: _____ ft

Body diameter: _____ ft

Body height: _____ ft

Cone height: _____ ft

i) Wet spray: _____ Yes _____ No

1. No. of Nozzles: _____
2. Type of liquid used: _____
3. Flow rate: _____ gpm
4. Make-up rate: _____ gpm
5. % recycled: _____ %

j) Fan location:

1. Downstream: _____ Direct emission
   _____ Auxiliary Stack
2. Upstream: _____ No cap ( vertical emissions )
   _____ Fixed cap ( diffuse emissions )
   _____ Wind respondent cap ( horizontal emissions )

5. Which process(es) does the cyclone(s) control emissions from? _____

_____

_____

6. Attach a diagram of the cyclone(s) used.

## ADSORPTION SECTION L3

1. Emission Point No. / Name: _____

2. Manufacturers Name and Model No.: _____

3. Date of construction for existing sources or date of anticipated start-up for new sources:

_____

4. Adsorption Data:

a) Type of Adsorption:
_____ One-pass regenerative _____ Two-pass regenerative
_____ Recirculating _____ Other: _____

b) Regenerative method:
_____ Discarded _____ Chemical
_____ Thermal ( Dry heat ) _____ Thermal ( Steam )
_____ Other: _____

c) Adsorption material:
_____ Activated carbon _____ Hydrous silicate
_____ Other: _____

d) Efficiency: _____ %

e) Flow Rate: _____ acfm

f) Pressure Drop: _____ inches $H_2O$

g) Inlet temperature: _____ °F

h) No. of compartments: _____

i) Size of adsorbent bed:
1. Length: _____ ft
2. Width: _____ ft
3. Height: _____ ft
4. Diameter: _____ ft

j) Regenerative schedule:
1. Maximum time for desorption: _____ sec., min., hrs.
2. Length of time to maximum saturation: _____ sec., min., hrs.

k) How are emissions controlled during regeneration? _____

_____

5. Which process(es) does the adsorber control emissions from? _____

_____

_____

1. Emission Point No. / Name: _____

2. Manufacturers Name and Model No.: _____

3. Date of construction for existing sources or date of anticipated start-up for new sources:

_____

4. Afterburner Data:

a) Type of afterburner:
   1) _____ Direct flame
   2) _____ Catalytic
   3) _____ Other: _____

b) Efficiency: _____ %

c) Flow Rate: _____ acfm

d) Maximum burner rating: _____ MMbtu / hr

e) Combustion chamber temperature: _____ °F

f) Retention time: _____ seconds

g) Combustion chamber dimensions:
   1) Length: _____ ft
   2) Width: _____ ft
   3) Diameter: _____ ft

h) Fuel type: _____

i) If fuel oil is burned: _____ % $SO_2$

j) Fuel usage rate: _____ gals / hr, cfm, etc.

5. Which process(es) does the afterburner control emissions from? _____

_____

_____

1. Emission Point No. / Name: _____

2. Manufacturers Name and Model No.: _____

3. Date of construction for existing sources or date of anticipated start-up for new sources:

_____

4. Scrubber Data:

a) Scrubber type: _____ Venturi _____ Orifice
_____ Packed Tower _____ Gravity Tower
_____ Cyclonic _____ Condenser
_____ Mist Eliminator _____ Impingement Plate
_____ Other: _____

b) Liquid injection rate:
1) Design maximum: _____ gpm @ _____psia
2) Expected average: _____ gpm @ _____pisa

c) Pressure drop: _____ inches $H_2O$

d) Scrubbing liquid:
1) _____ Once - through _____ Recycled
2) If recycled: _____ gpm make - up rate
3) If water, describe settling basin: _____
4) Solution / Reactant systems:
a) Chemical make - up: _____
b) How is discharge handled, treated? _____

e) Gas flow: _____ Counter current _____ Concurrent
1) Flow rate: _____ acfm
2) Inlet Temperature: _____ °F

f) Venturi Data:
1) Inlet Area: _____ $ft^2$
2) Throat Area: _____ $ft^2$
3) Throat velocity: _____ ft / sec
4) _____ Fixed throat _____ Variable throat

g) Packed or Plate Tower Data:
1) Surface Area: _____ $ft^2$
2) Packing depth: _____ ft
3) Type of packing: _____ Rings _____ Saddles
_____ Other: _____
4) No. of plates: _____
5) Type of plates: _____

h) Demisting Data:

1) Mist eliminator filter area: _____ $ft^2$

2) Type: _____ Cyclone _____ Vanes_____ Pad

_____ Other: _____

i) Efficiency: _____ %

j) Are extra nozzles readily available?_____ Yes _____ No

How many? _____

k) Pressure measurement devices installed? _____ Yes _____ No

5. Which process(es) does the scrubber control emissions from? _____

_____

_____

1. Emission Point No. / Name: _____

2. Manufacturers Name and Model No.: _____

3. Date of construction for existing sources or date of anticipated start-up for new sources:

_____

4. Precipitator Data:

a) Precipitator Type:

_____ Single Stage _____ Low Voltage _____ Hot Side
_____ Two Stage _____ High Voltage _____ Cold Side
_____ Other: _____

b) Efficiency: _____ %

c) Flow rate: _____ acfm

d) Pressure drop: _____ inches $H_2O$

e) Inlet temperature: _____ ° F

f) Total collection plate area: _____ $ft^2$

g) Gas viscosity: _____ poise

h) Resistivity of pollutant: _____ ohm - cm

i) Charging field strength: _____ volts

j) Collecting field strength: _____ volts

k) No. of compartments: _____

l) No. of electrically separate fields: _____

n) Fan is: _____ Upstream _____ Downstream of precipitator

o) Cleaning Method:

_____ Plate Rapping
_____ Plate Vibrating
_____ None
_____ Washing
_____ Other: _____

p) Rapper frequency:
1) _____ Automatic _____ Manual
2) _____ minutes / cycle

q) Corona power: _____ watts / 1000 cfm

r) Electrical usage: _____ kW / hr

m) List the electrical conditions per field:

| FIELD NO. | VOLTAGE (kV) | AMPERAGE (mA) |
|---|---|---|
| | | |
| | | |
| | | |
| | | |
| | | |
| | | |
| | | |
| | | |
| | | |
| | | |
| | | |
| | | |
| | | |

5. Which process(es) does the electrostatic precipitator control emissions from?

_____

_____

# OTHER AIR POLLUTION CONTROL EQUIPMENT / DEVICES

## SECTION L7

**If air pollution control equipment/device(s) are different from the previous sections descriptions or new technology, then explain below and attach manufacturers specifications including efficiency.**

## TABLE 1

## CODE NUMBERS FOR CONTROL DEVICES

Vapor Control Equipment

| | |
|---|---|
| 00 | GROUP - CONTROL BY COMBUSTION |
| 01 | Catalytic Combustion |
| 02 | Furnace Combustion |
| 03 | Boiler Firebox |
| 04 | Steam Injection Flare |
| 05 | Venturi Flare |
| 06 | Direct Flame Combustion (Afterburner) |
| 10 | GROUP - ADSORBERS |
| 10 | Activated Carbon - Nonregenerative |
| 11 | Activated Carbon - Regneerative |
| 12 | Silica Gel - Nonregenerative |
| 13 | Silica Get - Regenerative |
| 14 | Lithium Chloride |
| 15 | Activated Alumina |
| 16 | Activated Bauxite |
| 20 | GROUP - ABSORBERS |
| 20 | Sieve Plate Tower |
| 21 | Bubble - Cap Tower |
| 22 | Packed Tower |

Particulate Matter -
Liquid Mist Control Equipment

| | |
|---|---|
| 30 | GROUP - DRY SEPARATORS & FILTERS |
| 30 | Simple Cyclones |
| 31 | High Efficiency Cyclones |
| 32 | Settling Chamber |
| 33 | Simple Filters |
| 34 | Baghouse (Shaking) |
| 35 | Baghouse (Reverse Jet) |
| 36 | Dry Collector (Dynamic) |
| 40 | GROUP - WET COLLECTORS |
| 40 | Spray Chamber - No Baffles |
| 41 | Spray Chamber - With Baffles |
| 42 | Wet Cyclones - Rotoclone |
| 43 | Wet Dynamic Precipitator |
| 44 | Venturi Scrubber |
| 45 | Spray Tower (Not Absorption - Scrubbers) |
| 46 | Packed Tower (Not Absorption - Scrubbers) |
| 47 | Condensers (Tube and Shell); air |
| 48 | Barometric Condenser with hot wells |
| 50 | GROUP - ELECTRICAL PRECIPITATORS |
| 50 | Single Stage |
| 51 | Double Stage |
| 52 | Precipition |
| 60 | GROUP |
| 60 | Counteractant |
| 70 | GROUP - SPECIAL |
| 71 | Jet Exhausters (Air Dilution) |
| 72 | Mist Eliminators |
| 80 | GROUP - Other |
| | Specify |

# REGULATIONS FOR THE PREVENTION OF SIGNIFICANT DETERIORATION OF AIR QUALITY

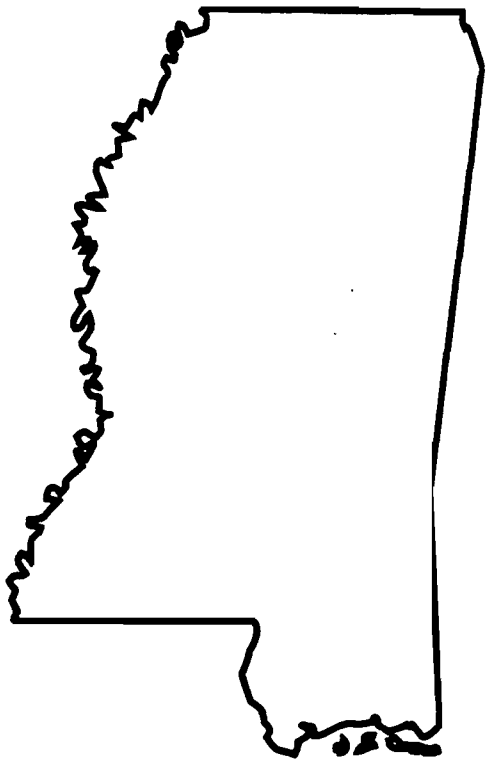

# STATE OF MISSISSIPPI


**MISSISSIPPI DEPARTMENT OF ENVIRONMENTAL QUALITY**
**OFFICE OF POLLUTION CONTROL**
**P. O. Box 10385**
**Jackson, Mississippi 39289-0385**


**REGULATION APC-S-5**
**Amended December 9, 1993**

MISSISSIPPI COMMISSION ON ENVIRONMENTAL QUALITY

# REGULATIONS FOR THE PREVENTION OF SIGNIFICANT DETERIORATION OF AIR QUALITY
# REGULATION APC-S-5

**Amended December 9, 1993**

1. The purpose of this regulation is to implement a program for the prevention of significant deterioration of air quality as required by 40 CFR 51.166. This regulation supercedes and replaces the previous adoption by reference of 40 CFR 52.21 in Regulation APC-S-2, "Permit Regulations for the Construction and/or Operation of Air Emissions Equipment". 40 CFR 52.21 and 51.166 as used in this regulation refer to the federal regulations as promulgated by December 9, 1993. CFR refers to the "Code of Federal Regulations".

2. All of the subsections of 40 CFR 52.21 other than subsections (a) [Plan disapproval], (q) [public participation], (s) [Environmental impact statement], and (u) [Delegation of authority] are incorporated herein and adopted by reference by the Mississippi Commission on Environmental Quality as official regulations of the State of Mississippi and shall hereafter be enforceable as such except for the changes set forth in Section 3. of this regulation.

3. The term "administrator" as it appears in 40 CFR 52.21 shall mean the Mississippi Environmental Quality Permit Board, except that:

   3.1 In subparagraph (b)(3)(iii) [relating to "net emissions increase"], it shall mean either the Mississippi Environmental Quality Permit Board or the Administrator of the United States Environmental Protection Agency (USEPA).

   3.2 In the following subsections, it shall continue to mean the Administrator of the USEPA:

      a. (b)(17) [definition of "federally enforceable"];

      b. (f)(1)(v), (f)(3), (f)(4)(i) [Exclusions from increment consumption];

      c. (g)(1)-(g)(6) [Redesignation];

      d. (l)(2) [Air quality models];

      e. (p)(1)-(p)(2) [Sources impacting Federal Class I areas];

      f. (t) [Disputed permits or redesignations].

4. The procedural requirements of 40 CFR 51.166(q) (excluding the phrase "The plan shall provide that-") are incorporated herein and adopted by reference, except that the phrase "specified time period" shall mean thirty (30) days and the words "one year" in subparagraph (q)(2) shall be replaced by the words "one hundred and fifty (150) days". The term "Administrator" as it appears in subparagraph (q)(2)(iv) shall continue to mean the Administrator of the USEPA.

5. The Executive Director of the Mississippi Department of Environmental Quality shall transmit to the Administrator of the USEPA a copy of each permit application filed under this regulation and shall notify the Administrator of the USEPA of each significant action the Executive Director takes on the application.

6. This regulation applies to any stationary source or modification to which 40 CFR 52.21 applied as of the date of adoption of this regulation, but for which the Mississippi Environmental Quality Permit Board had not issued a permit pursuant to 40 CFR 52.21 by that date.

A facility with processes inclusive in these business areas may be covered by Environmental Protection Agency's (EPA) categorical pretreatment standards. These facilities are termed "categorical users".

2. Give a brief description of all operations at this facility including primary products or services (attach additional sheets if necessary):

_____
_____
_____
_____
_____
_____
_____
_____

3. Indicate applicable Standard Industrial Classification (SIC) for all processes (If more than one applies, list in descending order of importance):

a._____
b._____
c._____
d._____
e._____

4. PRODUCT VOLUME:

| PRODUCT (Brandname) (levels with others (and no n.l.) | PAST CALENDAR YEAR Amounts Per Day (Daily Units) | | ESTIMATE THIS CALENDAR YEAR Amounts Per Day (Daily Units) | |
|---|---|---|---|---|
| | Average | Maximum | Average | Maximum |
| | | | | |
| | | | | |
| | | | | |
| | | | | |
| | | | | |
| | | | | |

SECTION C - WATER SUPPLY

1. Water Sources: (Check as may as are applicable)

[ ] Private Well
[ ] Surface Water
[ ] Municipal Water Utility (Specify City):_____
[ ] Other (Specify):_____

# APPENDIX C

# APPENDIX C

## COPY OF APPLICATIONS FOR DISCHARGE TO POTW

HARRISON COUNTY WASTEWATER MANAGEMENT DISTRICT

Industrial/Commercial Sewage Disposal

Permit Application Form

Note: Please read all attached instructions prior to completing this application.

SECTION A - GENERAL INFORMATION

1. Facility Name:_____

   a. Operator Name:_____

   b. Is the operator identified in 1.a., the owner of the facility? Yes [ ] No [ ]

      If no, provide the name and address of the operator and submit a copy of the contract and/or other documents indicating the operator's scope of responsibility for the facility._____

2. Facility Address:
   Street:_____
   City:_____ State:_____ Zip:_____

3. Business Mailing Address:
   Street or P.O. Box:_____
   City:_____ State:_____ Zip:_____

4. Designated signatory authority of the facility:
   (Attach similar information for each authorized representative)

   Name:_____
   Title:_____
   Address:_____
   City:_____ State:_____ Zip:_____
   Phone #:_____

5. Designated facility contact:

   Name:_____
   Title:_____
   Phone #:_____

SECTION 3 - BUSINESS ACTIVITY

1. If your facility employs or will be employing processes in any of the industrial categories or business activities listed below (regardless of whether they generate wastewater, waste sludge, or hazardous wastes), place a check beside the category of business activity (check all that apply).

Industrial Categories*

[ ] Aluminum Forming
[ ] Asbestos Manufacturing
[ ] Battery Manufacturing
[ ] Can Making
[ ] Carbon Black
[ ] Coal Mining
[ ] Coil Coating
[ ] Copper Forming
[ ] Electric and Electronic Components Manufacturing
[ ] Electroplating
[ ] Feedlots
[ ] Fertilizer Manufacturing
[ ] Foundries (Metal Molding and Casting)
[ ] Glass Manufacturing
[ ] Grain Mills
[ ] Inorganic Chemicals
[ ] Iron and Steel
[ ] Leather Tanning and Finishing
[ ] Metal Finishing
[ ] Nonferrous Metals Forming
[ ] Nonferrous Metals Manufacturing
[ ] Organic Chemicals Manufacturing
[ ] Paint and Ink Formulating
[ ] Paving and Roofing Manufacturing
[ ] Pesticides Manufacturing
[ ] Petroleum Refining
[ ] Pharmaceutical
[ ] Plastic and Synthetic Materials Manufacturing
[ ] Plastics Processing Manufacturing
[ ] Porcelain Enamel
[ ] Pulp, Paper, and Fiberboard Manufacturing
[ ] Rubber
[ ] Soap and Detergent Manufacturing
[ ] Steam Electric
[ ] Sugar Processing
[ ] Textile Mills
[ ] Timber Products

2. Name on the water bill: _____

Name: _____
Street: _____
City: _____ State: _____ Zip: _____

3. Water service account number: _____

4. List average water usage on premises:
(New facilities may estimate)

| Type | Average Water Usage (GPD) | Indicate Estimated (E) or Measured (M) |
|---|---|---|
| a. Contact cooling water | _____ | _____ |
| b. Non-contact cooling water | _____ | _____ |
| c. Boiler feed | _____ | _____ |
| d. Process | _____ | _____ |
| e. Sanitary | _____ | _____ |
| f. Air pollution control | _____ | _____ |
| g. Contained in product | _____ | _____ |
| h. Plant & equipment washdown | _____ | _____ |
| i. Irrigation & lawn watering | _____ | _____ |
| j. Other | _____ | _____ |
| k. TOTAL OF a-j | _____ | _____ |

SECTION D - SEWER INFORMATION

1. a. For an existing business:

Is the building presently connected to the public sanitary sewer system?

[ ] Yes: Sanitary sewer account number _____
[ ] No: Have you applied fora sanitary sewer hookup [ ]Y [ ]N

b. For a new business:

(i) Will you be occupying an existing vacant building (such as in an industrial park)? [ ] Yes [ ] No

(ii) Have you applied for a building permit if a new facility will be constructed? [ ] Yes [ ] No

(iii) Will you be connected to the public sanitary sewer system? [ ] Yes [ ] No

2. List size, descriptive location, and flow of each facility sewer which connects to the City's sewer system. (If more than three, attach additional information on another sheet.)

| Sewer Size | Descriptive Location of Sewer Connection or Discharge Point | Average Flow (GPD) |
|---|---|---|
| _____ | _____ | _____ |
| _____ | _____ | _____ |
| _____ | _____ | _____ |

SECTION E - WASTEWATER DISCHARGE INFORMATION

1. Does (or will) this facility discharge any wastewater other than from restrooms to the City sewer?

[ ] Yes If the answer to this question is "yes", complete the remainder of the application.

[ ] No If the answer to this question is "no", skip to SECTION I.

2. Provide the following information on wastewater flow rate. (New facilities may estimate).

a. Hours/Day Discharged (e.g., 8 hours/day):

M ____ T ____ W ____ TH ____ F ____ SAT ____ SUN ____

b. Hours of Discharge (e.g., 9 a.m. to 5 p.m.):

M ____ T ____ W ____ TH ____ F ____ SAT ____ SUN ____

c. Peak hourly flow rate (GPD) _____

d. Maximum daily flow rate (GPD) _____

e. Annual daily average (GPD) _____

3. If batch discharge occurs or will occur, indicate: (New facilities may estimate).

   a. Number of batch discharges _____ per day

   b. Average discharge per batch _____(GPD)

   c. Time of batch discharges _____ at _____
      (days of week) (hours of day)

   d. Flow rate _____ gallons/minute

   e. Percent of total discharge _____

4. Schematic Flow Diagram - for each major activity in which wastewater is or will be generated, draw a diagram of the flow of materials, products, water, and wastewater from the start of the activity to its completion, showing all unit processes. Indicate which processes use water and which generate wastestreams. Include the average daily volume and maximum daily volume of each wastestream (new facilities may estimate). If estimates are used for flow data this must be indicated. Number each unit process having wastewater discharges to the community sewer. Use these numbers when showing this unit processes in the building layout in Section H. This drawing must be certified by a State Registered Professional Engineer.

Facilities that checked activities in question 1 of Section B are considered Categorical Industrial Users and should skip to question 6.

5. For Non-Categorical Users Only: List average wastewater discharge, maximum discharge, and type of discharge (batch, continuous, or both), for each plant process. Include the reference number from the process schematic that corresponds to each process. (New facilities should provide estimates for each discharge).

| No | Process Description | Average Flow (GPD) | Maximum Flow (GPD) | Type of Discharge (batch, continuous, none) |
|---|---|---|---|---|
| | | | | |
| | | | | |
| | | | | |
| | | | | |
| | | | | |
| | | | | |

ANSWER QUESTIONS 6 & 7 ONLY IF YOU ARE SUBJECT TO CATEGORICAL PRETREATMENT STANDARDS

6. For Categorical Users: Provide the wastewater discharge flows for each of your processes or proposed processes. Include the reference number from the process schematic that corresponds to each process. (New facilities should provide estimates for each discharge).

| No | Regulated Process | Average Flow (GPD) | Maximum Flow (GPD) | Type of Discharge (batch, continuous, none) |
|---|---|---|---|---|
| | | | | |
| | | | | |
| | | | | |
| | | | | |
| | | | | |
| | | | | |

| No | Unregulated Process | Average Flow (GPD) | Maximum Flow (GPD) | Type of Discharge (batch, continuous, none) |
|---|---|---|---|---|
| | | | | |
| | | | | |
| | | | | |
| | | | | |
| | | | | |
| | | | | |

| No | Dilution | Average Flow (GPD) | Maximum Flow (GPD) | Type of Discharge (batch, continuous, none) |
|---|---|---|---|---|
| | | | | |
| | | | | |
| | | | | |
| | | | | |
| | | | | |
| | | | | |

7. For Categorical Users Subject To Total Toxic Organic (TTO) Requirements:

   Provide the following (TTO) information.

   a. Does (or will) this facility use any of the toxic organics that are listed under the TTO standard of the applicable categorical pretreatment standards published by EPA?

      [ ] Yes
      [ ] No

   b. Has a baseline monitoring report (BMR) been submitted which contains TTO information?

      [ ] Yes
      [ ] No

   c. Has a toxic organics management plan (TOMP) been developed?

      [ ] Yes, (please attach a copy)
      [ ] No

8. Do you have, or plan to have, automatic sampling equipment or continuous wastewater flow metering equipment at this facility?

| | | | | |
|---|---|---|---|---|
| Current: | Flow Metering | [ ] Yes | [ ] No | [ ] N/A |
| | Sampling Equipment | [ ] Yes | [ ] No | [ ] N/A |
| Planned: | Flow Metering | [ ] Yes | [ ] No | [ ] N/A |
| | Sampling Equipment | [ ] Yes | [ ] No | [ ] N/A |

If so, please indicate the present or future location of this equipment on the sewer schematic and describe the equipment below:

_____
_____
_____
_____
_____
_____

9. Are any process changes or expansions planned during the next three years that could alter wastewater volumes or characteristics? Consider production processes as well as air or water pollution treatment processes that may affect the discharge.

[ ] Yes
[ ] No, (skip question 10)

10. Briefly describe these changes and their effects on the wastewater volume and characteristics: (Attach additional sheets if needed.)

_____
_____
_____
_____

11. Are any materials or water reclamation systems in use or planned?

[ ] Yes
[ ] No, (skip question 12)

12. Briefly describe recovery process, substance recovered, percent recovered, and the concentration in the spent solution. Submit a flow diagram for each process: (Attach additional sheets if needed).

_____
_____
_____
_____
_____
_____
_____

## SECTION F - CHARACTERISTICS OF DISCHARGE

All current industrial users are required to submit monitoring data on all pollutants that are regulated specific to each process. Use the tables provided in this section to report the analytical results. DO NOT LEAVE BLANKS. For all other (nonregulated) pollutants, indicate whether the pollutant is known to be present (P), suspected to be present (S), or known not to be present (O), by placing the appropriate letter in the column for average reported values. Indicate on either the top of each table, or on a separate sheet, if necessary, the sample location and type of analysis used. Be sure methods conform to 40 CFR Part 136; if they do not, indicate what method was used.

New dischargers should use the table to indicate what pollutants will be present or are suspected to be present in proposed wastestreams by placing a P (expected to be present), S (may be present), or O (will not be present) under the average reported values.

(tables follow)

| Pollutant | Detection Level Used | Maximum Daily Value | | Average of Analyses | | Number of Analyses | Units | |
|---|---|---|---|---|---|---|---|---|
| | | Conc. | Mass | Conc. | Mass | | Conc. | Mass |
| Acenaphthene | | | | | | | | |
| Acrolein | | | | | | | | |
| Acrylonitrile | | | | | | | | |
| Benzene | | | | | | | | |
| Benzidine | | | | | | | | |
| Carbon tetrachloride | | | | | | | | |
| Chlorobenzene | | | | | | | | |
| 1,2,4-Trichlorobenzene | | | | | | | | |
| Hexachlorobenzene | | | | | | | | |
| 1,2-Dichloroethane | | | | | | | | |
| 1,1,1-Trichloroethane | | | | | | | | |
| Hexachloroethane | | | | | | | | |
| 1,1-Dichloroethane | | | | | | | | |
| 1,1,2-Trichloroethane | | | | | | | | |
| 1,1,2,2-Tetrachloroethane | | | | | | | | |
| Chloroethane | | | | | | | | |
| Bis(2-chloroethyl) ether | | | | | | | | |
| 17 Bis (chloro methyl) ether | | | | | | | | |
| 2-Chloroethyl vinyl ether | | | | | | | | |
| 2-Chloronaphthalene | | | | | | | | |
| 2,4,6-Trichlorophenol | | | | | | | | |
| Parachlorometa cresol | | | | | | | | |
| Chloroform | | | | | | | | |
| 2-Chlorophenol | | | | | | | | |
| 1,2-Dichlorobenzene | | | | | | | | |
| 1,3-Dichlorobenzene | | | | | | | | |
| 1,4-Dichlorobenzene | | | | | | | | |
| 3,3-Dichlorobenzidine | | | | | | | | |
| 1,1-Dichloroethylene | | | | | | | | |
| 1,2-Trans-dichloroethylene | | | | | | | | |
| 2,4-Dichlorophenol | | | | | | | | |
| 1,2-Dichloropropane | | | | | | | | |
| 1,2-Dichloropropylene | | | | | | | | |
| 1,3-Dichloropropylene | | | | | | | | |
| 2,4-Dimethylphenol | | | | | | | | |
| 2,4-Dinitrotoluene | | | | | | | | |
| 2,6-Dinitrotoluene | | | | | | | | |
| 1,2-Diphenylhydrazine | | | | | | | | |
| Ethylbenzene | | | | | | | | |
| Fluoranthene | | | | | | | | |
| 4-Chlorophenyl phenyl ether | | | | | | | | |
| 4-Bromophenyl phenyl ether | | | | | | | | |
| Bis(2-chloroisopropyl) ether | | | | | | | | |
| Bis(2-chloroethoxy) methane | | | | | | | | |
| Methylene chloride | | | | | | | | |
| Methyl chloride | | | | | | | | |
| Methyl bromide | | | | | | | | |
| Bromoform | | | | | | | | |
| Dichlorobromomethane | | | | | | | | |
| Chlorodibromomethane | | | | | | | | |
| Hexachlorobutadiene | | | | | | | | |
| Hexachlorocyclopentadiene | | | | | | | | |
| Isophorone | | | | | | | | |
| Naphthalene | | | | | | | | |
| Nitrobenzene | | | | | | | | |
| Nitrophenol | | | | | | | | |

| Pollutant | Detection Level Used | Maximum Daily Value | | Average of Analyses | | Number of Analyses | Units | |
|---|---|---|---|---|---|---|---|---|
| | | Conc. | Mass | Conc. | Mass | | Conc. | Mass |
| 2-Nitrophenol | | | | | | | | |
| 4-Nitrophenol | | | | | | | | |
| 2-4-Dinitrophenol | | | | | | | | |
| 4,6-Dinitro-O-cresol | | | | | | | | |
| N-nitrosodimethylamine | | | | | | | | |
| N-nitrosodiphenylamine | | | | | | | | |
| N-nitrosodi-n-propylamine | | | | | | | | |
| Pentachlorophenol | | | | | | | | |
| Phenol | | | | | | | | |
| Bis(2-ethylhexyl)phthalate | | | | | | | | |
| Butyl benzyl phthalate | | | | | | | | |
| Di-n-butyl phthalate | | | | | | | | |
| Di-n-octyl phthalate | | | | | | | | |
| Diethyl phthalate | | | | | | | | |
| Dimethyl phthalate | | | | | | | | |
| Benzo(a)anthracene | | | | | | | | |
| Benzo(a)pyrene | | | | | | | | |
| 3,4-benzofluoranthene | | | | | | | | |
| Benzo(k) fluoranthene | | | | | | | | |
| Chrysene | | | | | | | | |
| Acenaphthylene | | | | | | | | |
| Anthracene | | | | | | | | |
| Benzo(ghi)perylene | | | | | | | | |
| Fluorene | | | | | | | | |
| Phenanthrene | | | | | | | | |
| Dibenzo(a,h)anthracene | | | | | | | | |
| Indeno(1,2,3-cd)pyrene | | | | | | | | |
| Pyrene | | | | | | | | |
| Tetrachloroethylene | | | | | | | | |
| Toluene | | | | | | | | |
| Trichloroethylene | | | | | | | | |
| Vinyl chloride | | | | | | | | |
| Aldrin | | | | | | | | |
| Dieldrin | | | | | | | | |
| Chlordane | | | | | | | | |
| 4,4'-DDT | | | | | | | | |
| 4,4'-DDE | | | | | | | | |
| 4,4'-DDD | | | | | | | | |
| Alpha-endosulfan | | | | | | | | |
| Beta-endosulfan | | | | | | | | |
| Endosulfan sulfate | | | | | | | | |
| Endrin | | | | | | | | |
| Endrin aldehyde | | | | | | | | |
| Heptachlor | | | | | | | | |
| Heptachlor epoxide | | | | | | | | |
| Alpha-BHC | | | | | | | | |
| Gamma-BHC | | | | | | | | |
| Delta-BHC | | | | | | | | |
| PCB-1242 | | | | | | | | |
| PCB-1254 | | | | | | | | |
| PCB-1221 | | | | | | | | |
| PCB-1232 | | | | | | | | |
| PCB-1248 | | | | | | | | |
| PCB-1260 | | | | | | | | |
| PCB-1016 | | | | | | | | |
| Toxaphene | | | | | | | | |
| (TCDD) | | | | | | | | |

| Pollutant | Detection Level Used | Maximum Daily Value | | Average of Analyses | | Number of Analyses | Units | |
|---|---|---|---|---|---|---|---|---|
| | | Conc. | Mass | Conc. | Mass | | Conc. | Mass |
| Asbestos | | | | | | | | |
| Acidity | | | | | | | | |
| Alkalinity | | | | | | | | |
| Bacteria | | | | | | | | |
| BOD | | | | | | | | |
| COD | | | | | | | | |
| Chloride | | | | | | | | |
| Chlorine | | | | | | | | |
| Fluoride | | | | | | | | |
| Hardness | | | | | | | | |
| Magnesium | | | | | | | | |
| NH -N | | | | | | | | |
| Oil and Grease | | | | | | | | |
| TSS | | | | | | | | |
| TOC | | | | | | | | |
| Kjeldahl N | | | | | | | | |
| Nitrate N | | | | | | | | |
| Organic N | | | | | | | | |
| Orthophosphate P | | | | | | | | |
| Phosphorous | | | | | | | | |
| Sodium | | | | | | | | |
| Specific Conductivity | | | | | | | | |
| Sulfate (SO) | | | | | | | | |
| Sulfide (S) | | | | | | | | |
| Sulfite (SO) | | | | | | | | |
| Antimony | | | | | | | | |
| Arsenic | | | | | | | | |
| Barium | | | | | | | | |
| Beryllium | | | | | | | | |
| Cadmium | | | | | | | | |
| Chromium | | | | | | | | |
| Copper | | | | | | | | |
| Cyanide | | | | | | | | |
| Lead | | | | | | | | |
| Mercury | | | | | | | | |
| Nickel | | | | | | | | |
| Selenium | | | | | | | | |
| Silver | | | | | | | | |
| Thallium | | | | | | | | |
| Zinc | | | | | | | | |

SECTION G - TREATMENT

1. Is any form of wastewater treatment (see list below) practiced at this facility?

   [ ] Yes
   [ ] No

2. Is any form of wastewater treatment (or changes to an existing wastewater treatment) planned for this facility within the next three years?

   [ ] Yes, describe: _____
   [ ] No

3. Treatment devises or processes used or proposed for treating wastewater or sludge (check as many as appropriate).

   [ ] Air flotation
   [ ] Centrifuge
   [ ] Chemical precipitation
   [ ] Chlorination
   [ ] Cyclone
   [ ] Filtration
   [ ] Flow equalization
   [ ] Grease or oil separation, type:_____
   [ ] Grease trap
   [ ] Grinding filter
   [ ] Grit removal
   [ ] Ion exchange
   [ ] Neutralization, pH correction
   [ ] Ozonation
   [ ] Reverse osmosis
   [ ] Screen
   [ ] Sedimentation
   [ ] Septic tank
   [ ] Solvent separation
   [ ] Spill protection
   [ ] Sump
   [ ] Biological treatment, type:_____
   [ ] Rainwater diversion or storage
   [ ] Other chemical treatment, type:_____
   [ ] Other physical treatment, type:_____
   [ ] Other, type:_____

4. Description

   Describe the pollutant loadings, flow rates, design capacity, physical size, and operating procedures of each treatment facility checked above.

   _____
   _____
   _____

5. Attach a process flow diagram for each existing treatment system. Include process equipment, by-products, by-product disposal method, waste and by-product volumes, and design and operating conditions.

6. Describe any changes in treatment or disposal methods planned or under construction for the wastewater discharge to the sanitary sewer. Please include estimated completion dates.

_____
_____
_____
_____

7. Do you have a treatment operator? [ ] Yes [ ] No

(if Yes,) Name: _____
Title: _____
Phone: _____
Full Time: _____ (specify hours)
Part Time: _____ (specify hours)

8. Do you have a manual on the correct operation of your treatment equipment?
[ ] Yes [ ] No

9. Do you have a written maintenance schedule for your treatment equipment?
[ ] Yes [ ] No

SECTION E - FACILITY OPERATIONAL CHARACTERISTICS

1. Shift Information

| Work Days | | [ ] Mon | [ ] Tues | [ ] Wed | [ ] Thur | [ ] Fri | [ ] Sat | [ ] Sun |
|---|---|---|---|---|---|---|---|---|
| Shifts per work day: | | ____ | ____ | ____ | ____ | ____ | ____ | ____ |
| Empl's per shift: | 1st | ____ | ____ | ____ | ____ | ____ | ____ | ____ |
| | 2nd | ____ | ____ | ____ | ____ | ____ | ____ | ____ |
| | 3rd | ____ | ____ | ____ | ____ | ____ | ____ | ____ |
| Shift start and end times: | 1st | ____ | ____ | ____ | ____ | ____ | ____ | ____ |
| | 2nd | ____ | ____ | ____ | ____ | ____ | ____ | ____ |
| | 3rd | ____ | ____ | ____ | ____ | ____ | ____ | ____ |

2. Indicate whether the business activity is:

[ ] Continuous through the year, or
[ ] Seasonal - Circle the months of the year during which the business activity occurs:

J F M A M J J A S O N D

COMMENTS: _____

3. Indicate whether the facility discharge is:

[ ] Continuous through the year, or
[ ] Seasonal - Circle the months of the year during which the business activity occurs:

J F M A M J J A S O N D

COMMENTS: _____

4. Does operation shut down for vacation, maintenance, or other reasons?

[ ] Yes, indicate reasons and period when shutdown occurs:

_____

[ ] No

5. List types and amounts (mass or volume per day) of raw materials used or planned for use (attach list if needed):

_____

6. List types and quantity of chemicals used or planned for use (attach list if needed). Include copies of Manufacturer's Safety Data Sheets (if available) for all chemicals identified:

| Chemical | Quantity |
|---|---|
| | |

7. Building Layout - Draw to scale the location of each building on the premises. Show map orientation and location of all water meters, storm drains, numbered unit processes (from schematic flow diagram), public sewers, and each facility sewer line connected to the public sewers. Number each sewer and show existing and proposed sampling locations. This drawing must be certified by a State Registered Professional Engineer.

A blueprint or drawing of the facilities showing the above items may be attached in lieu of submitting a drawing on this sheet.

---

SECTION I - SPILL PREVENTION

1. Do you have chemical storage containers, bins, or ponds at your facility? [ ] Yes [ ] No

   If yes, please give a description of their location, contents, size, type, and frequency and method of cleaning. Also indicate in a diagram or comment on the proximity of these containers to a sewer or storm drain. Indicate if buried metal containers have cathodic protection.

2. Do you have floor drains in your manufacturing or chemical storage area(s)? [ ] Yes [ ] No If yes; Where do they discharge to?

3. If you have chemical storage containers, bins, or ponds in manufacturing area, could an accidental spill lead to a discharge to: (check all that apply).

   [ ] an onsite disposal system
   [ ] public sanitary sewer system (e.g. through a floor drain)
   [ ] storm drain
   [ ] to ground
   [ ] other, specify:
   [ ] not applicable, no possible discharge to any of the above routes

4. Do you have an accidental spill prevention plan (ASPP) to prevent spills of chemicals or slug discharges from entering the Control Authority's collection systems?

   [ ] Yes - (Please enclose a copy with the application)
   [ ] No
   [ ] N/A, Not applicable since there are no floor drains and/or the facility discharge(s) only domestic wastes.

5. Please describe below any previous spill events and remedial measures taken to prevent their reoccurrence.

_____
_____
_____
_____
_____
_____
_____
_____

SECTION J - NON-DISCHARGED WASTES

1. Are any waste liquids or sludges generated and not disposed of in the sanitary sewer system?

   [ ] Yes, please describe below
   [ ] No, skip the remainder of Section J

| Waste Generated | Quantity (per year) | Disposal Method |
|---|---|---|
| | | |
| | | |
| | | |
| | | |

2. Indicate which wastes identified above are disposed of at an off-site treatment facility and which are disposed of on-site.

3. If any of your wastes are sent to an off-site centralized waste treatment facility, identify the waste and the facility.

4. If an outside firm removes any of the above checked wastes, state the name(s) and address(es) of all waste haulers:

   a._____ b._____

   Permit No. (if applicable):_____ Permit No. (if applicable):_____

5. Have you been issued any Federal, State, or local environmental permits?

   [ ] Yes
   [ ] No

   If yes, please list the permit(s):_____

SECTION K - AUTHORIZED SIGNATURES

Compliance certification:

1. Are all applicable Federal, State, or local pretreatment standards and requirements being met on a consistent basis?

   [ ] Yes [ ] No [ ] Not yet discharging

2. If No:

   a. What additional operations and maintenance procedures are being considered to bring the facility into compliance? Also, list additional treatment technology or practice being considered in order to bring the facility into compliance.

   b. Provide a schedule for bringing the facility into compliance. Specify major events planned along with reasonable completion dates. Note that if the District issues a permit to the applicant, it may establish a schedule for compliance different from the one submitted by the facility.

| Milestone Activity | Completion Date |
|---|---|
| | |
| | |
| | |
| | |
| | |
| | |
| | |
| | |
| | |
| | |
| | |
| | |
| | |
| | |
| | |
| | |
| | |

Authorized Representative Statement:

I certify under penalty of law that this document and all attachments were prepared under my direction or supervision in accordance with a system designed to assure that qualified personnel properly gather and evaluate the information submitted. Based on my inquiry of the person or persons who manage the system, or those persons directly responsible for gathering the information, the information submitted is, to the best of my knowledge and belief, true, accurate, and complete. I am aware that there are significant penalties for submitting false information, including the possibility of fine and imprisonment for knowing violations.

| | | |
|---|---|---|
| Name(s) | Title | |
| Signature | Date | Phone |

POTW Contact List

Earl Mahaffey
Brian Collins
State of Mississippi
Office of Pollution Control
P.O. Box 10385
Jackson, Mississippi 39209
(601) 961-5122

Al Gombus
O&M Contract Administrator
Harrison County Wastewater and Solid Waste Management District
14108 Airport Road
P.O. Box 2409
Gulfport, Mississippi 39505
Telephone (601) 868-8752
Fax (601) 868-8751

Buddy Broadway
Gulfport Public Works Director
Gulfport, Mississippi
(601) 868-5740

# APPENDIX D

# APPENDIX D

# EXCAVATION PERMIT

EXCAVATION

REQUESTING COMMAND: CBC ENV

WORK REQUEST/SERVICE CALL # _____ JOB ORDER # _____

LOCATION: SEE ATTACHED SITE PLAN

PLANNED START DATE: ASAP

PLANNED COMPLETION DATE: _____

DESCRIPTION OF WORK: CONSTRUCT A 3'X150' TRENCH for site 6 remediation.

REQUESTING OFFICIAL: Gordon Crane

**********

UNDERGROUND UTILITY CHECK

| | (SIGNATURE) | (CODE) | (DATE) |
|---|---|---|---|
| ELECTRICAL: | [signature] | | 7-20 |
| GAS: | DLM | 420 | 7/20/94 |
| WATER: LINE IN the AREA | DLM | 420 | 7/20/94 |
| SEWER: | DLM | 420 | 7/20/94 |
| MONACO FIRE ALARM: | [signature] | | 7-20 |
| TELEPHONE: | All CLEAR | 420 | 7/21/94 |
| Cable TV: | | | |

MISSISSIPPI ONE CONTROL NUMBER: 9407 20 1222 0238

1-800-227-6477 *** PHONE PERMIT IS GOOD FOR 10 WORKING DAYS.
OUR CODE ******NABA*****

APPROVAL IS GRANTED FOR 90 DAYS FOR ALL ITEMS WITH THE EXCEPTION OF TELEPHONES.

[signature] 7-21-94

FMED DIRECTOR (DATE)

# Base Construction Contact List

Gordon Crane
Environmental Coordinator
NCBC Gulfport
(601) 871-2485

Bernie Walker
Civil Engineering
NCBC Gulfport
(601) 871-2193

Don Morruchi
Public Works
NCBC Gulfport
(601) 871-2167

# APPENDIX E

# FLOWPATH™ MODEL INPUT PARAMETERS AND OUTPUT RESULTS

## TABLE OF CONTENTS FOR APPENDIX E


| | Page No. |
|---|---|
| Water Balance Results from Baseline Rune, TR61 . . . . . | E-3 |
| Water Balance Results from Interceptor Trench, Constant Head . . . . . | E-21 |
| Water Balance Results from Twelve Ints Trench, Pumping Levels . . . . . | E-47 |

| PROJECT | COMP. BY | JOB NO. |
|---|---|---|
| NCBC GULFPORT, MS SITE 6 FPPA | KDS | 8503.70 |
| | CHK. BY | DATE |

FLOWPATH EM by Waterloo Hydrogeologic Software, Inc.

ASSUMATIONS for NCBC GULFPORT, SITE 6

| Parameter | Default | Other Specified Areas |
|---|---|---|
| Hydraulic Conductivity | 5.7 ft/day | 0.57 ft/day<br>2.8 ft/day<br>25.5 ft/day<br>K = of trench 227 ft/day |
| Effective Porosity | 0.25 | 0.22<br>0.25<br>0.27<br>0.33 trench fill |
| Constant Heads | El. 23.3' m/w West<br>El. 24.4' m/w Southeast | |
| Bottom of Aquifer | El. -5.0 m/w | El -6.0 to<br>El. -15.0' m/w along South boundary (sweeping from southeast to west in a NW orientation) |

Note: "Bottom of Aquifer" below Partially Penetrating Trench El. +13.0 m/w

| | | |
|---|---|---|
| Recharge | | |
| Infiltration | .0125 ft/day ditches<br>.0110 ft/day field<br>~~0.0091065~~ ft/day | 0 at paved area & bldgs |
| Evaporation | 0.0091 ft/day | 0 at paved area & bldgs. |
| Constant head @ Trench | 20.4' and 21.9' m/w | |

**Drawdown(s) and Flowrates**
**NCBC Gulfport Site 6 Free-Phase Product Extraction System**

| | Trench | Trench | Well Points | Well Points | Well Points |
|---|---|---|---|---|---|
| Drawdown | 1.5 ft | 3.0 ft | 1.1 ft | 1.5 ft | 3.0 to 4.5 ft |
| Flow "Q" | 7.7 gpm | 14.6 gpm | 3.5 gpm | 13.4 gpm | 18.2 gpm |
| Length | 150 LF | 150 LF | na | na | na |
| No.of Wells | na | na | 7 well points | 7 well points | 7 well points |
| Capture Zone | | | | | |

# Water Balance Results from Baseline Rune, TR61

# NCBC Gulfport Site 6

FLOWPATH Modeling Task
Water Balance Results from Baseline Run, TR61
No Trench, No Pumping *07/23/94 kds*

```
*************************************************************
*            E C H O P R I N T                              *
*                                                           *
*            F L O W P A T H                                *
*              version 4.3                                  *
*                                                           *
* FLOWPATH was written by Thomas Franz and Nilson Guiguer   *
*                                                           *
*************************************************************
*                                                           *
*            Copyright 1989-1993                            *
*                  by                                       *
*         Waterloo Hydrogeologic Software                   *
*            200 Candlewood Crescent                        *
*              Waterloo, Ontario                            *
*               N2L 5Y9, Canada                             *
*                                                           *
*              ph (519) 746-1798                            *
*                                                           *
*************************************************************
```

FLOWPATH logbook for data set : TR61

Unit System : English units [ft/gal/d]

***** GRID PARAMETERS *****

Number of x-grid lines : 22

Number of y-grid lines : 27

Grid coordinates (x-grid lines) [ft] :

| | |
|---|---|
| 1 | 0.000E+0000 |
| 2 | 2.000E+0001 |
| 3 | 3.009E+0001 |
| 4 | 4.000E+0001 |
| 5 | 4.513E+0001 |
| 6 | 4.965E+0001 |
| 7 | 5.491E+0001 |
| 8 | 6.000E+0001 |
| 9 | 6.544E+0001 |
| 10 | 6.996E+0001 |
| 11 | 7.447E+0001 |
| 12 | 8.000E+0001 |
| 13 | 9.027E+0001 |
| 14 | 1.000E+0002 |
| 15 | 1.200E+0002 |
| 16 | 1.400E+0002 |
| 17 | 1.600E+0002 |
| 18 | 1.800E+0002 |
| 19 | 2.000E+0002 |
| 20 | 2.200E+0002 |
| 21 | 2.400E+0002 |
| 22 | 2.600E+0002 |

Grid coordinates (y-grid lines) [ft] :

| | |
|---|---|
| 1 | 0.000E+0000 |
| 2 | 2.000E+0001 |
| 3 | 4.000E+0001 |
| 4 | 6.000E+0001 |
| 5 | 8.000E+0001 |
| 6 | 9.027E+0001 |
| 7 | 1.000E+0002 |
| 8 | 1.098E+0002 |
| 9 | 1.200E+0002 |
| 10 | 1.301E+0002 |
| 11 | 1.400E+0002 |
| 12 | 1.497E+0002 |
| 13 | 1.600E+0002 |
| 14 | 1.700E+0002 |
| 15 | 1.800E+0002 |
| 16 | 1.896E+0002 |
| 17 | 2.000E+0002 |
| 18 | 2.099E+0002 |
| 19 | 2.200E+0002 |
| 20 | 2.302E+0002 |
| 21 | 2.400E+0002 |
| 22 | 2.497E+0002 |
| 23 | 2.600E+0002 |
| 24 | 2.800E+0002 |
| 25 | 3.000E+0002 |
| 26 | 3.200E+0002 |
| 27 | 3.400E+0002 |

***** WELL PARAMETERS *****

Number of wells : 0

***** CONSTRAINED HEAD NODES *****

Number of constant head nodes : 44

| No. | i | j | X [ft] | Y [ft] | const. head [ft] |
|---|---|---|---|---|---|
| 1 | 1 | 27 | 0.000E+0000 | 3.400E+0002 | 2.330E+0001 |
| 2 | 1 | 26 | 0.000E+0000 | 3.197E+0002 | 2.330E+0001 |
| 3 | 1 | 25 | 0.000E+0000 | 3.001E+0002 | 2.330E+0001 |
| 4 | 1 | 24 | 0.000E+0000 | 2.798E+0002 | 2.330E+0001 |
| 5 | 1 | 23 | 0.000E+0000 | 2.603E+0002 | 2.330E+0001 |
| 6 | 1 | 22 | 0.000E+0000 | 2.497E+0002 | 2.330E+0001 |
| 7 | 1 | 21 | 0.000E+0000 | 2.400E+0002 | 2.330E+0001 |
| 8 | 1 | 20 | 0.000E+0000 | 2.302E+0002 | 2.330E+0001 |
| 9 | 1 | 19 | 0.000E+0000 | 2.196E+0002 | 2.330E+0001 |
| 10 | 1 | 18 | 0.000E+0000 | 2.099E+0002 | 2.330E+0001 |
| 11 | 1 | 17 | 0.000E+0000 | 2.001E+0002 | 2.330E+0001 |
| 12 | 1 | 16 | 0.000E+0000 | 1.896E+0002 | 2.330E+0001 |
| 13 | 1 | 15 | 0.000E+0000 | 1.798E+0002 | 2.330E+0001 |
| 14 | 1 | 14 | 0.000E+0000 | 1.700E+0002 | 2.330E+0001 |
| 15 | 1 | 13 | 0.000E+0000 | 1.602E+0002 | 2.330E+0001 |
| 16 | 1 | 12 | 0.000E+0000 | 1.497E+0002 | 2.330E+0001 |
| 17 | 1 | 11 | 0.000E+0000 | 1.399E+0002 | 2.330E+0001 |
| 18 | 1 | 10 | 0.000E+0000 | 1.301E+0002 | 2.330E+0001 |
| 19 | 1 | 9 | 0.000E+0000 | 1.204E+0002 | 2.330E+0001 |
| 20 | 1 | 8 | 0.000E+0000 | 1.098E+0002 | 2.330E+0001 |
| 21 | 1 | 7 | 0.000E+0000 | 1.000E+0002 | 2.330E+0001 |
| 22 | 1 | 6 | 0.000E+0000 | 9.027E+0001 | 2.330E+0001 |
| 23 | 1 | 5 | 0.000E+0000 | 7.973E+0001 | 2.330E+0001 |
| 24 | 1 | 4 | 0.000E+0000 | 6.018E+0001 | 2.330E+0001 |

| | | | | | |
|---|---|---|---|---|---|
| 25 | 1 | 3 | 0.000E+0000 | 3.987E+0001 | 2.330E+0001 |
| 26 | 1 | 2 | 0.000E+0000 | 2.031E+0001 | 2.330E+0001 |
| 27 | 1 | 1 | 0.000E+0000 | 0.000E+0000 | 2.330E+0001 |
| 28 | 4 | 3 | 3.987E+0001 | 3.987E+0001 | 2.335E+0001 |
| 29 | 7 | 13 | 5.491E+0001 | 1.602E+0002 | 2.335E+0001 |
| 30 | 17 | 1 | 1.602E+0002 | 0.000E+0000 | 2.400E+0001 |
| 31 | 18 | 1 | 1.798E+0002 | 0.000E+0000 | 2.410E+0001 |
| 32 | 19 | 1 | 2.001E+0002 | 0.000E+0000 | 2.420E+0001 |
| 33 | 20 | 1 | 2.196E+0002 | 0.000E+0000 | 2.430E+0001 |
| 34 | 21 | 1 | 2.400E+0002 | 0.000E+0000 | 2.440E+0001 |
| 35 | 22 | 2 | 2.603E+0002 | 2.031E+0001 | 2.440E+0001 |
| 36 | 22 | 4 | 2.603E+0002 | 6.018E+0001 | 2.430E+0001 |
| 37 | 22 | 7 | 2.603E+0002 | 1.000E+0002 | 2.420E+0001 |
| 38 | 22 | 11 | 2.603E+0002 | 1.399E+0002 | 2.410E+0001 |
| 39 | 22 | 14 | 2.603E+0002 | 1.700E+0002 | 2.400E+0001 |
| 40 | 22 | 19 | 2.603E+0002 | 2.196E+0002 | 2.390E+0001 |
| 41 | 22 | 23 | 2.603E+0002 | 2.603E+0002 | 2.380E+0001 |
| 42 | 22 | 26 | 2.603E+0002 | 3.197E+0002 | 2.370E+0001 |
| 43 | 20 | 27 | 2.196E+0002 | 3.400E+0002 | 2.360E+0001 |
| 44 | 18 | 27 | 1.798E+0002 | 3.400E+0002 | 2.350E+0001 |

***** SPECIFIED FLUX NODES *****

Number of flux nodes : 0

***** SURFACE WATER BODIES *****

Number of surface water body nodes : 0

***** AQUIFER PROPERTIES *****

Number of different material properties : 4

| No. | Kxx [ft/d] | Kyy [ft/d] | Porosity [-] | |
|---|---|---|---|---|
| 1 | 5.700E+0000 | 5.700E+0000 | 2.500E-0001 | (default) |
| 2 | 2.550E+0001 | 2.550E+0001 | 2.700E-0001 | |
| 3 | 5.700E-0001 | 5.700E-0001 | 2.200E-0001 | |
| 4 | 2.800E+0000 | 2.800E+0000 | 2.500E-0001 | |

********** DISTRIBUTION OF AQUIFER MATERIAL PROPERTIES **********

| | 1 | 2 | 3 | 4 | 5 | 6 | 7 | 8 | 9 | 10 | 11 | 12 | 13 | 14 | 15 | 16 | 17 |
|---|---|---|---|---|---|---|---|---|---|---|---|---|---|---|---|---|---|
| 27 | 1 | 1 | 1 | 1 | 1 | 1 | 1 | 1 | 1 | 1 | 1 | 1 | 1 | 1 | 1 | 1 | |
| 26 | 1 | 1 | 1 | 1 | 1 | 1 | 1 | 1 | 1 | 1 | 1 | 1 | 1 | 1 | 1 | 1 | |
| 25 | 1 | 1 | 1 | 1 | 1 | 1 | 1 | 1 | 1 | 1 | 1 | 1 | 1 | 1 | 1 | 1 | |
| 24 | 2 | 1 | 1 | 1 | 1 | 1 | 1 | 1 | 1 | 1 | 1 | 1 | 1 | 1 | 1 | 1 | |
| 23 | 2 | 1 | 1 | 1 | 1 | 1 | 1 | 1 | 1 | 1 | 1 | 1 | 1 | 1 | 1 | 1 | |
| 22 | 2 | 2 | 1 | 1 | 1 | 1 | 1 | 1 | 1 | 1 | 1 | 1 | 1 | 1 | 1 | 1 | |
| 21 | 2 | 2 | 1 | 1 | 1 | 1 | 1 | 1 | 1 | 1 | 1 | 1 | 1 | 1 | 1 | 3 | |
| 20 | 2 | 2 | 1 | 1 | 1 | 1 | 1 | 1 | 1 | 1 | 1 | 1 | 1 | 1 | 3 | 3 | |
| 19 | 2 | 2 | 2 | 1 | 1 | 1 | 1 | 1 | 1 | 1 | 1 | 1 | 1 | 3 | 3 | 3 | |
| 18 | 2 | 2 | 2 | 1 | 1 | 1 | 1 | 1 | 1 | 1 | 1 | 1 | 3 | 3 | 3 | 1 | |
| 17 | 2 | 2 | 2 | 1 | 1 | 1 | 1 | 1 | 1 | 1 | 3 | 3 | 3 | 3 | 3 | 1 | |
| 16 | 2 | 2 | 1 | 1 | 1 | 1 | 1 | 1 | 3 | 3 | 3 | 3 | 1 | 1 | 1 | 1 | |
| 15 | 2 | 2 | 1 | 1 | 1 | 1 | 1 | 1 | 1 | 1 | 1 | 1 | 1 | 1 | 1 | 1 | |
| 14 | 2 | 2 | 1 | 1 | 1 | 1 | 1 | 1 | 1 | 1 | 1 | 1 | 1 | 1 | 1 | 1 | |

| | 1 | 2 | 3 | 4 | 5 | 6 | 7 | 8 | 9 | 10 | 11 | 12 | 13 | 14 | 15 | 16 | 17 |
|---|---|---|---|---|---|---|---|---|---|---|---|---|---|---|---|---|---|
| 13 | 2 | 1 | 1 | 1 | 1 | 1 | 1 | 1 | 1 | 1 | 1 | 1 | 1 | 1 | 1 | 1 | 1 |
| 12 | 2 | 1 | 1 | 1 | 1 | 1 | 1 | 1 | 1 | 1 | 1 | 1 | 1 | 1 | 1 | 1 | 1 |
| 11 | 1 | 1 | 1 | 1 | 1 | 1 | 1 | 1 | 1 | 1 | 1 | 1 | 1 | 1 | 1 | 1 | 1 |
| 10 | 1 | 1 | 1 | 1 | 1 | 1 | 1 | 1 | 1 | 1 | 1 | 1 | 1 | 1 | 1 | 1 | 1 |
| 9 | 1 | 1 | 1 | 1 | 1 | 1 | 1 | 1 | 1 | 1 | 1 | 1 | 1 | 1 | 1 | 1 | 4 |
| 8 | 1 | 1 | 1 | 1 | 1 | 1 | 1 | 1 | 1 | 1 | 1 | 1 | 1 | 1 | 1 | 1 | 4 |
| 7 | 1 | 1 | 1 | 1 | 1 | 1 | 1 | 1 | 1 | 1 | 1 | 1 | 1 | 1 | 1 | 4 | 4 |
| 6 | 1 | 1 | 1 | 1 | 1 | 1 | 1 | 1 | 1 | 1 | 1 | 1 | 1 | 1 | 4 | 4 | 4 |
| 5 | 1 | 1 | 1 | 1 | 1 | 1 | 1 | 1 | 1 | 1 | 1 | 1 | 4 | 4 | 4 | 4 | 4 |
| 4 | 1 | 1 | 1 | 1 | 1 | 1 | 1 | 1 | 1 | 1 | 4 | 4 | 4 | 4 | 4 | 4 | 4 |
| 3 | 1 | 1 | 1 | 1 | 1 | 1 | 1 | 4 | 4 | 4 | 4 | 4 | 4 | 4 | 4 | 4 | 4 |
| 2 | 1 | 1 | 1 | 1 | 1 | 4 | 4 | 4 | 4 | 4 | 4 | 4 | 4 | 4 | 4 | 4 | 4 |
| 1 | 1 | 1 | 1 | 4 | 4 | 4 | 4 | 4 | 4 | 4 | 4 | 4 | 4 | 4 | 4 | 4 | 4 |

| | 18 | 19 | 20 | 21 | 22 |
|---|---|---|---|---|---|
| 27 | 1 | 1 | 1 | 1 | 1 |
| 26 | 1 | 1 | 1 | 1 | 1 |
| 25 | 1 | 1 | 1 | 1 | 1 |
| 24 | 1 | 1 | 1 | 1 | 1 |
| 23 | 1 | 1 | 1 | 1 | 1 |
| 22 | 1 | 1 | 1 | 1 | 1 |
| 21 | 1 | 1 | 1 | 1 | 1 |
| 20 | 1 | 1 | 1 | 1 | 1 |
| 19 | 1 | 1 | 1 | 1 | 1 |
| 18 | 1 | 1 | 1 | 1 | 1 |
| 17 | 1 | 1 | 1 | 1 | 1 |
| 16 | 1 | 1 | 1 | 1 | 1 |
| 15 | 1 | 1 | 1 | 1 | 1 |
| 14 | 1 | 1 | 1 | 1 | 4 |
| 13 | 1 | 1 | 1 | 4 | 4 |
| 12 | 1 | 1 | 4 | 4 | 4 |
| 11 | 1 | 4 | 4 | 4 | 4 |
| 10 | 1 | 4 | 4 | 4 | 4 |
| 9 | 4 | 4 | 4 | 4 | 4 |
| 8 | 4 | 4 | 4 | 4 | 4 |
| 7 | 4 | 4 | 4 | 4 | 4 |
| 6 | 4 | 4 | 4 | 4 | 4 |
| 5 | 4 | 4 | 4 | 4 | 4 |
| 4 | 4 | 4 | 4 | 4 | 4 |
| 3 | 4 | 4 | 4 | 4 | 4 |
| 2 | 4 | 4 | 4 | 4 | 4 |
| 1 | 4 | 4 | 4 | 4 | 4 |

***** AQUIFER TYPE *****

Unconfined aquifer

***** AQUIFER BOTTOM ELEVATIONS *****

Number of different aquifer bottom elevations : 5

| No. | aquifer bottom elevation [ft] |
|---|---|
| 1 | -5.000E+0000 (default) |
| 2 | -1.500E+0001 |
| 3 | -1.300E+0001 |

4 -7.500E+0000
5 -6.000E+0000

********** DISTRIBUTION OF AQUIFER BOTTOM ELEVATIONS **********

| | 1 | 2 | 3 | 4 | 5 | 6 | 7 | 8 | 9 | 10 | 11 | 12 | 13 | 14 | 15 | 16 | 17 |
|---|---|---|---|---|---|---|---|---|---|---|---|---|---|---|---|---|---|
| 27 | 1 | 1 | 1 | 1 | 1 | 1 | 1 | 1 | 1 | 1 | 1 | 1 | 1 | 1 | 1 | 1 | |
| 26 | 1 | 1 | 1 | 1 | 1 | 1 | 1 | 1 | 1 | 1 | 1 | 1 | 1 | 1 | 1 | 1 | |
| 25 | 1 | 1 | 1 | 1 | 1 | 1 | 1 | 1 | 1 | 1 | 1 | 1 | 1 | 1 | 1 | 1 | |
| 24 | 1 | 1 | 1 | 1 | 1 | 1 | 1 | 1 | 1 | 1 | 1 | 1 | 1 | 1 | 1 | 1 | |
| 23 | 1 | 1 | 1 | 1 | 1 | 1 | 1 | 1 | 1 | 1 | 1 | 1 | 1 | 1 | 1 | 1 | |
| 22 | 1 | 1 | 1 | 1 | 1 | 1 | 1 | 1 | 1 | 1 | 1 | 1 | 1 | 1 | 1 | 1 | |
| 21 | 1 | 1 | 1 | 1 | 1 | 1 | 1 | 1 | 1 | 1 | 1 | 1 | 1 | 1 | 1 | 1 | |
| 20 | 1 | 1 | 1 | 1 | 1 | 1 | 1 | 1 | 1 | 1 | 1 | 1 | 1 | 1 | 1 | 1 | |
| 19 | 1 | 1 | 1 | 1 | 1 | 1 | 1 | 1 | 1 | 1 | 1 | 1 | 1 | 1 | 1 | 1 | |
| 18 | 1 | 1 | 1 | 1 | 1 | 1 | 1 | 1 | 1 | 1 | 1 | 1 | 1 | 1 | 1 | 1 | |
| 17 | 1 | 1 | 1 | 1 | 1 | 1 | 1 | 1 | 1 | 1 | 1 | 1 | 1 | 1 | 1 | 1 | |
| 16 | 1 | 1 | 1 | 1 | 1 | 1 | 1 | 1 | 1 | 1 | 1 | 1 | 1 | 1 | 1 | 1 | |
| 15 | 1 | 1 | 1 | 1 | 1 | 1 | 1 | 1 | 1 | 1 | 1 | 1 | 1 | 1 | 1 | 1 | |
| 14 | 1 | 1 | 1 | 1 | 1 | 1 | 1 | 1 | 1 | 1 | 1 | 1 | 1 | 1 | 1 | 1 | |
| 13 | 1 | 1 | 1 | 1 | 1 | 1 | 1 | 1 | 1 | 1 | 1 | 1 | 1 | 1 | 1 | 1 | |
| 12 | 1 | 1 | 1 | 1 | 1 | 1 | 1 | 1 | 1 | 1 | 1 | 1 | 1 | 1 | 1 | 1 | |
| 11 | 1 | 1 | 1 | 1 | 1 | 1 | 1 | 1 | 1 | 1 | 1 | 1 | 1 | 1 | 1 | 1 | |
| 10 | 2 | 2 | 2 | 1 | 1 | 1 | 1 | 1 | 1 | 1 | 1 | 1 | 1 | 1 | 1 | 1 | |
| 9 | 2 | 2 | 2 | 1 | 1 | 1 | 1 | 1 | 1 | 1 | 1 | 1 | 1 | 1 | 1 | 1 | |
| 8 | 2 | 2 | 2 | 2 | 2 | 2 | 2 | 1 | 1 | 1 | 1 | 1 | 1 | 1 | 1 | 1 | |
| 7 | 2 | 2 | 2 | 2 | 2 | 2 | 2 | 2 | 2 | 2 | 2 | 2 | 1 | 1 | 1 | 1 | |
| 6 | 2 | 2 | 2 | 2 | 2 | 2 | 2 | 2 | 2 | 2 | 2 | 2 | 1 | 1 | 1 | 1 | |
| 5 | 2 | 2 | 2 | 2 | 2 | 2 | 2 | 2 | 2 | 2 | 2 | 2 | 3 | 3 | 1 | 1 | |
| 4 | 2 | 2 | 2 | 2 | 2 | 2 | 2 | 2 | 2 | 2 | 2 | 2 | 3 | 3 | 4 | 4 | 1 |
| 3 | 2 | 2 | 2 | 2 | 2 | 2 | 2 | 2 | 2 | 2 | 2 | 2 | 3 | 3 | 4 | 4 | 5 |
| 2 | 2 | 2 | 2 | 2 | 2 | 2 | 2 | 2 | 2 | 2 | 2 | 2 | 3 | 3 | 4 | 4 | 5 |
| 1 | 2 | 2 | 2 | 2 | 2 | 2 | 2 | 2 | 2 | 2 | 2 | 2 | 3 | 3 | 4 | 4 | 5 |

| | 18 | 19 | 20 | 21 | 22 |
|---|---|---|---|---|---|
| 27 | 1 | 1 | 1 | 1 | 1 |
| 26 | 1 | 1 | 1 | 1 | 1 |
| 25 | 1 | 1 | 1 | 1 | 1 |
| 24 | 1 | 1 | 1 | 1 | 1 |
| 23 | 1 | 1 | 1 | 1 | 1 |
| 22 | 1 | 1 | 1 | 1 | 1 |
| 21 | 1 | 1 | 1 | 1 | 1 |
| 20 | 1 | 1 | 1 | 1 | 1 |
| 19 | 1 | 1 | 1 | 1 | 1 |
| 18 | 1 | 1 | 1 | 1 | 1 |
| 17 | 1 | 1 | 1 | 1 | 1 |
| 16 | 1 | 1 | 1 | 1 | 1 |
| 15 | 1 | 1 | 1 | 1 | 1 |
| 14 | 1 | 1 | 1 | 1 | 1 |
| 13 | 1 | 1 | 1 | 1 | 1 |
| 12 | 1 | 1 | 1 | 1 | 1 |
| 11 | 1 | 1 | 1 | 1 | 1 |
| 10 | 1 | 1 | 1 | 1 | 1 |
| 9 | 1 | 1 | 1 | 1 | 1 |
| 8 | 1 | 1 | 1 | 1 | 1 |
| 7 | 1 | 1 | 1 | 1 | 1 |
| 6 | 1 | 1 | 1 | 1 | 1 |
| 5 | 1 | 1 | 1 | 1 | 1 |
| 4 | 1 | 1 | 1 | 1 | 1 |
| 3 | 5 | 1 | 1 | 1 | 1 |
| 2 | 5 | 5 | 5 | 1 | 1 |
| 1 | 5 | 5 | 5 | 5 | 5 |

***** AREAL RECHARGE *****

Number of different infiltration/evapotranspiration rates : 3

| No. | infiltration [L/T] | evapotranspiration [L/T] | effective recharge [L/T] | |
|---|---|---|---|---|
| 1 | 1.100E-0002 | 9.100E-0003 | 1.900E-0003 | (default) |
| 1 | 1.256E-0002 | 9.100E-0003 | 3.460E-0003 | |
| 1 | 0.000E+0000 | 0.000E+0000 | 0.000E+0000 | |

********** DISTRIBUTION OF AREAL IN/OUT-FLUXES **********

| | 1 | 2 | 3 | 4 | 5 | 6 | 7 | 8 | 9 | 10 | 11 | 12 | 13 | 14 | 15 | 16 | 17 |
|---|---|---|---|---|---|---|---|---|---|---|---|---|---|---|---|---|---|
| 27 | 2 | 2 | 2 | 2 | 2 | 2 | 2 | 2 | 2 | 2 | 2 | 2 | 2 | 2 | 2 | 2 | |
| 26 | 2 | 2 | 1 | 1 | 1 | 1 | 1 | 1 | 1 | 1 | 1 | 1 | 1 | 1 | 1 | 1 | |
| 25 | 2 | 2 | 1 | 1 | 1 | 1 | 1 | 1 | 1 | 1 | 1 | 1 | 1 | 1 | 1 | 1 | |
| 24 | 2 | 2 | 1 | 1 | 1 | 1 | 1 | 1 | 1 | 1 | 1 | 1 | 1 | 1 | 1 | 1 | |
| 23 | 2 | 2 | 1 | 1 | 1 | 1 | 1 | 1 | 1 | 1 | 1 | 3 | 3 | 1 | 1 | 1 | |
| 22 | 2 | 2 | 1 | 1 | 1 | 1 | 1 | 1 | 1 | 1 | 1 | 3 | 3 | 3 | 3 | 3 | |
| 21 | 2 | 2 | 1 | 1 | 1 | 1 | 1 | 1 | 1 | 1 | 1 | 3 | 3 | 3 | 3 | 3 | |
| 20 | 2 | 2 | 1 | 1 | 1 | 1 | 1 | 1 | 1 | 1 | 1 | 3 | 3 | 3 | 3 | 3 | |
| 19 | 2 | 2 | 1 | 1 | 1 | 1 | 1 | 1 | 1 | 1 | 1 | 3 | 3 | 3 | 3 | 3 | |
| 18 | 2 | 2 | 1 | 1 | 1 | 1 | 1 | 1 | 1 | 1 | 1 | 3 | 3 | 3 | 3 | 3 | |
| 17 | 2 | 2 | 1 | 1 | 1 | 1 | 1 | 1 | 1 | 1 | 1 | 1 | 1 | 1 | 1 | 1 | |
| 16 | 2 | 2 | 1 | 1 | 1 | 1 | 1 | 1 | 1 | 1 | 1 | 1 | 1 | 1 | 1 | 1 | |
| 15 | 2 | 2 | 1 | 1 | 1 | 1 | 1 | 1 | 1 | 1 | 1 | 1 | 1 | 1 | 1 | 1 | |
| 14 | 2 | 2 | 1 | 1 | 1 | 1 | 1 | 1 | 1 | 1 | 1 | 1 | 1 | 1 | 1 | 1 | |
| 13 | 2 | 2 | 1 | 3 | 3 | 3 | 1 | 1 | 1 | 1 | 1 | 1 | 1 | 1 | 1 | 1 | |
| 12 | 2 | 2 | 1 | 3 | 3 | 3 | 1 | 1 | 1 | 1 | 1 | 1 | 1 | 1 | 1 | 1 | |
| 11 | 2 | 2 | 1 | 1 | 1 | 1 | 1 | 1 | 1 | 1 | 1 | 1 | 1 | 1 | 1 | 1 | |
| 10 | 2 | 2 | 1 | 1 | 1 | 1 | 1 | 1 | 1 | 1 | 1 | 1 | 1 | 1 | 1 | 1 | |
| 9 | 2 | 2 | 1 | 1 | 1 | 1 | 1 | 1 | 1 | 1 | 1 | 1 | 1 | 1 | 1 | 1 | |
| 8 | 2 | 2 | 1 | 1 | 1 | 1 | 1 | 1 | 1 | 1 | 1 | 1 | 1 | 1 | 1 | 1 | |
| 7 | 2 | 2 | 1 | 1 | 1 | 1 | 1 | 1 | 1 | 1 | 1 | 1 | 1 | 1 | 1 | 1 | |
| 6 | 2 | 2 | 1 | 1 | 1 | 1 | 1 | 1 | 1 | 1 | 1 | 1 | 1 | 1 | 1 | 1 | |
| 5 | 2 | 2 | 1 | 1 | 1 | 1 | 1 | 1 | 1 | 1 | 1 | 1 | 1 | 1 | 1 | 1 | |
| 4 | 2 | 2 | 1 | 3 | 3 | 3 | 3 | 3 | 3 | 3 | 3 | 3 | 3 | 3 | 3 | 3 | |
| 3 | 2 | 2 | 1 | 3 | 3 | 3 | 3 | 3 | 3 | 3 | 3 | 3 | 3 | 3 | 3 | 3 | |
| 2 | 2 | 2 | 1 | 1 | 1 | 1 | 1 | 1 | 1 | 1 | 1 | 1 | 1 | 1 | 1 | 1 | |
| 1 | 2 | 2 | 1 | 1 | 1 | 1 | 1 | 1 | 1 | 1 | 1 | 1 | 1 | 1 | 1 | 1 | |

| | 18 | 19 | 20 | 21 | 22 |
|---|---|---|---|---|---|
| 27 | 2 | 2 | 2 | 2 | 3 |
| 26 | 1 | 1 | 1 | 1 | 3 |
| 25 | 1 | 1 | 1 | 1 | 3 |
| 24 | 1 | 1 | 1 | 1 | 3 |
| 23 | 1 | 1 | 1 | 1 | 3 |
| 22 | 3 | 1 | 1 | 1 | 3 |
| 21 | 3 | 1 | 1 | 1 | 3 |
| 20 | 3 | 3 | 3 | 3 | 3 |
| 19 | 3 | 1 | 1 | 1 | 3 |
| 18 | 3 | 1 | 1 | 1 | 3 |
| 17 | 1 | 1 | 1 | 1 | 3 |
| 16 | 1 | 1 | 1 | 1 | 3 |
| 15 | 1 | 1 | 1 | 1 | 3 |
| 14 | 1 | 1 | 1 | 1 | 3 |
| 13 | 1 | 1 | 1 | 1 | 3 |
| 12 | 1 | 1 | 1 | 1 | 3 |
| 11 | 1 | 1 | 1 | 1 | 3 |
| 10 | 1 | 1 | 1 | 1 | 3 |
| 9 | 1 | 1 | 1 | 1 | 3 |

| | | | | | |
|---|---|---|---|---|---|
| 8 | 1 | 1 | 1 | 1 | 3 |
| 7 | 1 | 1 | 1 | 1 | 3 |
| 6 | 1 | 1 | 1 | 1 | 3 |
| 5 | 1 | 1 | 1 | 1 | 3 |
| 4 | 3 | 1 | 1 | 1 | 3 |
| 3 | 3 | 1 | 1 | 1 | 3 |
| 2 | 1 | 1 | 1 | 1 | 3 |
| 1 | 1 | 1 | 1 | 1 | 3 |
| | 18 | 19 | 20 | 21 | 22 |

***** PATHLINE & PARTICLE TRACKING DATA *****

Number of forward particles : 7

| No. | x-release | y-release |
|---|---|---|
| 1 | 2.204E+0002 | 2.400E+0002 |
| 2 | 2.023E+0002 | 1.790E+0002 |
| 3 | 2.001E+0002 | 1.204E+0002 |
| 4 | 1.617E+0002 | 5.942E+0001 |
| 5 | 1.031E+0002 | 3.460E+0001 |
| 6 | 2.001E+0002 | 2.986E+0002 |
| 7 | 1.414E+0002 | 3.189E+0002 |

Number of reverse particles : 0

No well particles specified

********** HYDRAULIC HEAD DISTRIBUTION **********

| | 1 | 2 | 3 | 4 | 5 | 6 |
|---|---|---|---|---|---|---|
| 27 | 2.33E+0001 | 2.34E+0001 | 2.34E+0001 | 2.34E+0001 | 2.34E+0001 | 2.34E+0001 |
| 26 | 2.33E+0001 | 2.34E+0001 | 2.34E+0001 | 2.34E+0001 | 2.34E+0001 | 2.34E+0001 |
| 25 | 2.33E+0001 | 2.33E+0001 | 2.34E+0001 | 2.34E+0001 | 2.34E+0001 | 2.34E+0001 |
| 24 | 2.33E+0001 | 2.33E+0001 | 2.34E+0001 | 2.34E+0001 | 2.34E+0001 | 2.34E+0001 |
| 23 | 2.33E+0001 | 2.33E+0001 | 2.33E+0001 | 2.34E+0001 | 2.34E+0001 | 2.34E+0001 |
| 22 | 2.33E+0001 | 2.33E+0001 | 2.33E+0001 | 2.34E+0001 | 2.34E+0001 | 2.34E+0001 |
| 21 | 2.33E+0001 | 2.33E+0001 | 2.33E+0001 | 2.34E+0001 | 2.34E+0001 | 2.34E+0001 |
| 20 | 2.33E+0001 | 2.33E+0001 | 2.33E+0001 | 2.34E+0001 | 2.34E+0001 | 2.34E+0001 |
| 19 | 2.33E+0001 | 2.33E+0001 | 2.33E+0001 | 2.33E+0001 | 2.34E+0001 | 2.34E+0001 |
| 18 | 2.33E+0001 | 2.33E+0001 | 2.33E+0001 | 2.33E+0001 | 2.34E+0001 | 2.34E+0001 |
| 17 | 2.33E+0001 | 2.33E+0001 | 2.33E+0001 | 2.33E+0001 | 2.34E+0001 | 2.34E+0001 |
| 16 | 2.33E+0001 | 2.33E+0001 | 2.33E+0001 | 2.33E+0001 | 2.34E+0001 | 2.34E+0001 |
| 15 | 2.33E+0001 | 2.33E+0001 | 2.33E+0001 | 2.34E+0001 | 2.34E+0001 | 2.34E+0001 |
| 14 | 2.33E+0001 | 2.33E+0001 | 2.33E+0001 | 2.34E+0001 | 2.34E+0001 | 2.34E+0001 |
| 13 | 2.33E+0001 | 2.33E+0001 | 2.33E+0001 | 2.34E+0001 | 2.34E+0001 | 2.34E+0001 |
| 12 | 2.33E+0001 | 2.33E+0001 | 2.33E+0001 | 2.34E+0001 | 2.34E+0001 | 2.34E+0001 |
| 11 | 2.33E+0001 | 2.33E+0001 | 2.34E+0001 | 2.34E+0001 | 2.34E+0001 | 2.34E+0001 |
| 10 | 2.33E+0001 | 2.33E+0001 | 2.34E+0001 | 2.34E+0001 | 2.34E+0001 | 2.34E+0001 |
| 9 | 2.33E+0001 | 2.33E+0001 | 2.34E+0001 | 2.34E+0001 | 2.34E+0001 | 2.34E+0001 |
| 8 | 2.33E+0001 | 2.33E+0001 | 2.34E+0001 | 2.34E+0001 | 2.34E+0001 | 2.34E+0001 |
| 7 | 2.33E+0001 | 2.33E+0001 | 2.34E+0001 | 2.34E+0001 | 2.34E+0001 | 2.34E+0001 |
| 6 | 2.33E+0001 | 2.33E+0001 | 2.34E+0001 | 2.34E+0001 | 2.34E+0001 | 2.34E+0001 |
| 5 | 2.33E+0001 | 2.33E+0001 | 2.34E+0001 | 2.34E+0001 | 2.34E+0001 | 2.34E+0001 |
| 4 | 2.33E+0001 | 2.33E+0001 | 2.34E+0001 | 2.34E+0001 | 2.34E+0001 | 2.34E+0001 |
| 3 | 2.33E+0001 | 2.33E+0001 | 2.33E+0001 | 2.33E+0001 | 2.34E+0001 | 2.34E+0001 |
| 2 | 2.33E+0001 | 2.33E+0001 | 2.34E+0001 | 2.34E+0001 | 2.34E+0001 | 2.34E+0001 |
| 1 | 2.33E+0001 | 2.33E+0001 | 2.34E+0001 | 2.34E+0001 | 2.34E+0001 | 2.34E+0001 |

| | 1 | 2 | 3 | 4 | 5 | 6 |
|---|---|---|---|---|---|---|
| | 7 | 8 | 9 | 10 | 11 | 12 |
| 27 | 2.34E+0001 | 2.34E+0001 | 2.35E+0001 | 2.35E+0001 | 2.35E+0001 | 2.35E+0001 |
| 26 | 2.34E+0001 | 2.34E+0001 | 2.34E+0001 | 2.35E+0001 | 2.35E+0001 | 2.35E+0001 |
| 25 | 2.34E+0001 | 2.34E+0001 | 2.34E+0001 | 2.35E+0001 | 2.35E+0001 | 2.35E+0001 |
| 24 | 2.34E+0001 | 2.34E+0001 | 2.34E+0001 | 2.34E+0001 | 2.35E+0001 | 2.35E+0001 |
| 23 | 2.34E+0001 | 2.34E+0001 | 2.34E+0001 | 2.34E+0001 | 2.34E+0001 | 2.35E+0001 |
| 22 | 2.34E+0001 | 2.34E+0001 | 2.34E+0001 | 2.34E+0001 | 2.34E+0001 | 2.35E+0001 |
| 21 | 2.34E+0001 | 2.34E+0001 | 2.34E+0001 | 2.34E+0001 | 2.34E+0001 | 2.34E+0001 |
| 20 | 2.34E+0001 | 2.34E+0001 | 2.34E+0001 | 2.34E+0001 | 2.34E+0001 | 2.34E+0001 |
| 19 | 2.34E+0001 | 2.34E+0001 | 2.34E+0001 | 2.34E+0001 | 2.34E+0001 | 2.34E+0001 |
| 18 | 2.34E+0001 | 2.34E+0001 | 2.34E+0001 | 2.34E+0001 | 2.34E+0001 | 2.34E+0001 |
| 17 | 2.34E+0001 | 2.34E+0001 | 2.34E+0001 | 2.34E+0001 | 2.34E+0001 | 2.35E+0001 |
| 16 | 2.34E+0001 | 2.34E+0001 | 2.34E+0001 | 2.34E+0001 | 2.35E+0001 | 2.35E+0001 |
| 15 | 2.34E+0001 | 2.34E+0001 | 2.34E+0001 | 2.35E+0001 | 2.35E+0001 | 2.35E+0001 |
| 14 | 2.34E+0001 | 2.34E+0001 | 2.34E+0001 | 2.35E+0001 | 2.35E+0001 | 2.35E+0001 |
| 13 | 2.33E+0001 | 2.34E+0001 | 2.34E+0001 | 2.34E+0001 | 2.35E+0001 | 2.35E+0001 |
| 12 | 2.34E+0001 | 2.34E+0001 | 2.34E+0001 | 2.35E+0001 | 2.35E+0001 | 2.35E+0001 |
| 11 | 2.34E+0001 | 2.34E+0001 | 2.35E+0001 | 2.35E+0001 | 2.35E+0001 | 2.35E+0001 |
| 10 | 2.34E+0001 | 2.34E+0001 | 2.35E+0001 | 2.35E+0001 | 2.35E+0001 | 2.35E+0001 |
| 9 | 2.34E+0001 | 2.34E+0001 | 2.35E+0001 | 2.35E+0001 | 2.35E+0001 | 2.35E+0001 |
| 8 | 2.34E+0001 | 2.34E+0001 | 2.35E+0001 | 2.35E+0001 | 2.35E+0001 | 2.35E+0001 |
| 7 | 2.34E+0001 | 2.34E+0001 | 2.35E+0001 | 2.35E+0001 | 2.35E+0001 | 2.35E+0001 |
| 6 | 2.34E+0001 | 2.34E+0001 | 2.35E+0001 | 2.35E+0001 | 2.35E+0001 | 2.35E+0001 |
| 5 | 2.34E+0001 | 2.34E+0001 | 2.35E+0001 | 2.35E+0001 | 2.35E+0001 | 2.35E+0001 |
| 4 | 2.34E+0001 | 2.34E+0001 | 2.34E+0001 | 2.35E+0001 | 2.35E+0001 | 2.35E+0001 |
| 3 | 2.34E+0001 | 2.34E+0001 | 2.34E+0001 | 2.35E+0001 | 2.35E+0001 | 2.35E+0001 |
| 2 | 2.34E+0001 | 2.34E+0001 | 2.35E+0001 | 2.35E+0001 | 2.35E+0001 | 2.35E+0001 |
| 1 | 2.34E+0001 | 2.34E+0001 | 2.35E+0001 | 2.35E+0001 | 2.35E+0001 | 2.35E+0001 |

| | 7 | 8 | 9 | 10 | 11 | 12 |
|---|---|---|---|---|---|---|
| | 13 | 14 | 15 | 16 | 17 | 18 |
| 27 | 2.35E+0001 | 2.35E+0001 | 2.35E+0001 | 2.36E+0001 | 2.36E+0001 | 2.35E+0001 |
| 26 | 2.35E+0001 | 2.35E+0001 | 2.35E+0001 | 2.36E+0001 | 2.36E+0001 | 2.36E+0001 |
| 25 | 2.35E+0001 | 2.35E+0001 | 2.35E+0001 | 2.36E+0001 | 2.36E+0001 | 2.36E+0001 |
| 24 | 2.35E+0001 | 2.35E+0001 | 2.36E+0001 | 2.36E+0001 | 2.36E+0001 | 2.37E+0001 |
| 23 | 2.35E+0001 | 2.35E+0001 | 2.36E+0001 | 2.36E+0001 | 2.37E+0001 | 2.37E+0001 |
| 22 | 2.35E+0001 | 2.35E+0001 | 2.35E+0001 | 2.36E+0001 | 2.37E+0001 | 2.37E+0001 |
| 21 | 2.35E+0001 | 2.35E+0001 | 2.35E+0001 | 2.36E+0001 | 2.37E+0001 | 2.37E+0001 |
| 20 | 2.35E+0001 | 2.35E+0001 | 2.36E+0001 | 2.37E+0001 | 2.37E+0001 | 2.37E+0001 |
| 19 | 2.35E+0001 | 2.35E+0001 | 2.36E+0001 | 2.37E+0001 | 2.37E+0001 | 2.38E+0001 |
| 18 | 2.35E+0001 | 2.35E+0001 | 2.36E+0001 | 2.37E+0001 | 2.37E+0001 | 2.38E+0001 |
| 17 | 2.35E+0001 | 2.36E+0001 | 2.36E+0001 | 2.37E+0001 | 2.37E+0001 | 2.38E+0001 |
| 16 | 2.36E+0001 | 2.36E+0001 | 2.36E+0001 | 2.37E+0001 | 2.37E+0001 | 2.38E+0001 |
| 15 | 2.35E+0001 | 2.36E+0001 | 2.36E+0001 | 2.37E+0001 | 2.38E+0001 | 2.38E+0001 |
| 14 | 2.35E+0001 | 2.36E+0001 | 2.36E+0001 | 2.37E+0001 | 2.38E+0001 | 2.38E+0001 |
| 13 | 2.35E+0001 | 2.36E+0001 | 2.36E+0001 | 2.37E+0001 | 2.38E+0001 | 2.38E+0001 |
| 12 | 2.35E+0001 | 2.36E+0001 | 2.36E+0001 | 2.37E+0001 | 2.38E+0001 | 2.38E+0001 |
| 11 | 2.35E+0001 | 2.36E+0001 | 2.36E+0001 | 2.37E+0001 | 2.38E+0001 | 2.38E+0001 |
| 10 | 2.35E+0001 | 2.36E+0001 | 2.36E+0001 | 2.37E+0001 | 2.38E+0001 | 2.38E+0001 |
| 9 | 2.35E+0001 | 2.36E+0001 | 2.36E+0001 | 2.37E+0001 | 2.38E+0001 | 2.39E+0001 |
| 8 | 2.35E+0001 | 2.36E+0001 | 2.36E+0001 | 2.37E+0001 | 2.38E+0001 | 2.39E+0001 |
| 7 | 2.35E+0001 | 2.36E+0001 | 2.36E+0001 | 2.37E+0001 | 2.38E+0001 | 2.39E+0001 |
| 6 | 2.35E+0001 | 2.36E+0001 | 2.37E+0001 | 2.37E+0001 | 2.38E+0001 | 2.39E+0001 |
| 5 | 2.35E+0001 | 2.36E+0001 | 2.37E+0001 | 2.38E+0001 | 2.39E+0001 | 2.39E+0001 |
| 4 | 2.35E+0001 | 2.36E+0001 | 2.37E+0001 | 2.38E+0001 | 2.39E+0001 | 2.40E+0001 |
| 3 | 2.36E+0001 | 2.36E+0001 | 2.37E+0001 | 2.38E+0001 | 2.39E+0001 | 2.40E+0001 |
| 2 | 2.36E+0001 | 2.36E+0001 | 2.37E+0001 | 2.38E+0001 | 2.40E+0001 | 2.41E+0001 |
| 1 | 2.36E+0001 | 2.36E+0001 | 2.37E+0001 | 2.39E+0001 | 2.40E+0001 | 2.41E+0001 |

| | 13 | 14 | 15 | 16 | 17 | 18 |
|---|---|---|---|---|---|---|
| | 19 | 20 | 21 | 22 | | |
| 27 | 2.36E+0001 | 2.36E+0001 | 2.37E+0001 | 2.37E+0001 | | |
| 26 | 2.36E+0001 | 2.36E+0001 | 2.37E+0001 | 2.37E+0001 | | |
| 25 | 2.37E+0001 | 2.37E+0001 | 2.37E+0001 | 2.37E+0001 | | |

| | | | | |
|---|---|---|---|---|
| 24 | 2.37E+0001 | 2.37E+0001 | 2.37E+0001 | 2.37E+0001 |
| 23 | 2.37E+0001 | 2.38E+0001 | 2.38E+0001 | 2.38E+0001 |
| 22 | 2.37E+0001 | 2.38E+0001 | 2.38E+0001 | 2.38E+0001 |
| 21 | 2.38E+0001 | 2.38E+0001 | 2.38E+0001 | 2.38E+0001 |
| 20 | 2.38E+0001 | 2.38E+0001 | 2.38E+0001 | 2.39E+0001 |
| 19 | 2.38E+0001 | 2.38E+0001 | 2.38E+0001 | 2.39E+0001 |
| 18 | 2.38E+0001 | 2.38E+0001 | 2.39E+0001 | 2.39E+0001 |
| 17 | 2.38E+0001 | 2.38E+0001 | 2.39E+0001 | 2.39E+0001 |
| 16 | 2.38E+0001 | 2.39E+0001 | 2.39E+0001 | 2.39E+0001 |
| 15 | 2.38E+0001 | 2.39E+0001 | 2.39E+0001 | 2.39E+0001 |
| 14 | 2.38E+0001 | 2.39E+0001 | 2.39E+0001 | 2.40E+0001 |
| 13 | 2.39E+0001 | 2.39E+0001 | 2.40E+0001 | 2.40E+0001 |
| 12 | 2.39E+0001 | 2.39E+0001 | 2.40E+0001 | 2.40E+0001 |
| 11 | 2.39E+0001 | 2.39E+0001 | 2.40E+0001 | 2.41E+0001 |
| 10 | 2.39E+0001 | 2.40E+0001 | 2.40E+0001 | 2.41E+0001 |
| 9 | 2.39E+0001 | 2.40E+0001 | 2.41E+0001 | 2.41E+0001 |
| 8 | 2.40E+0001 | 2.40E+0001 | 2.41E+0001 | 2.41E+0001 |
| 7 | 2.40E+0001 | 2.41E+0001 | 2.41E+0001 | 2.42E+0001 |
| 6 | 2.40E+0001 | 2.41E+0001 | 2.41E+0001 | 2.42E+0001 |
| 5 | 2.40E+0001 | 2.41E+0001 | 2.42E+0001 | 2.42E+0001 |
| 4 | 2.41E+0001 | 2.41E+0001 | 2.42E+0001 | 2.43E+0001 |
| 3 | 2.41E+0001 | 2.42E+0001 | 2.43E+0001 | 2.43E+0001 |
| 2 | 2.42E+0001 | 2.42E+0001 | 2.43E+0001 | 2.44E+0001 |
| 1 | 2.42E+0001 | 2.43E+0001 | 2.44E+0001 | 2.44E+0001 |
| | 19 | 20 | 21 | 22 |

********** End of logbook **********

NCBC GULFPORT SITE 60

FLOWPATH ITERATIONS

FILENAME: TRY 51

Baseline - No Pumpi... No Trend

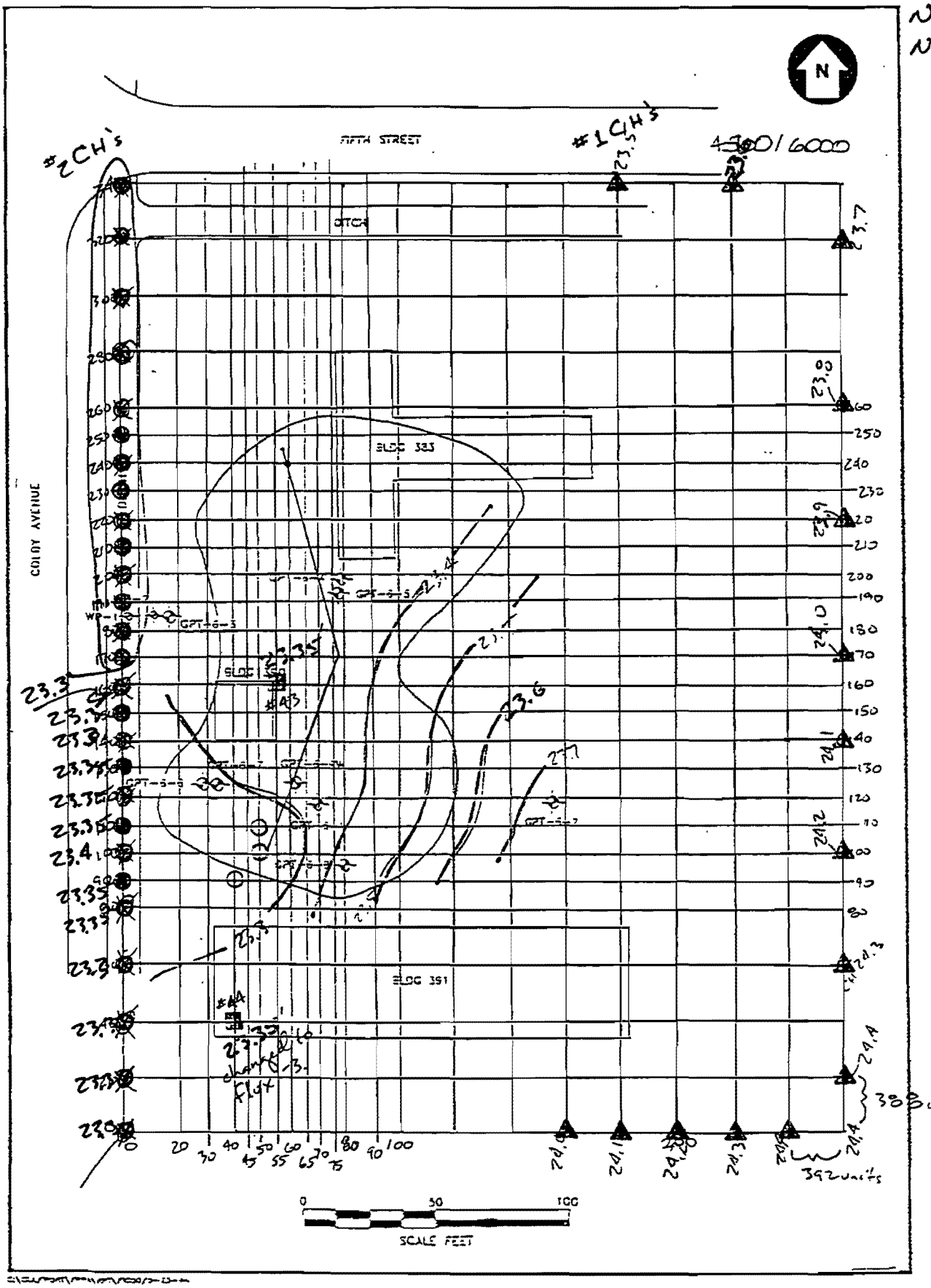


-600 / -600

E-12

CONSTANT HEADS

● Downgradient #2

■ Mid Gradient #3

13/17 element rows/colu...

11/13 grid rows/colu...

NCBC GULFPORT SITE 60

FLOWPATH ITERATIONS

FILENAME: TR451

Baseline

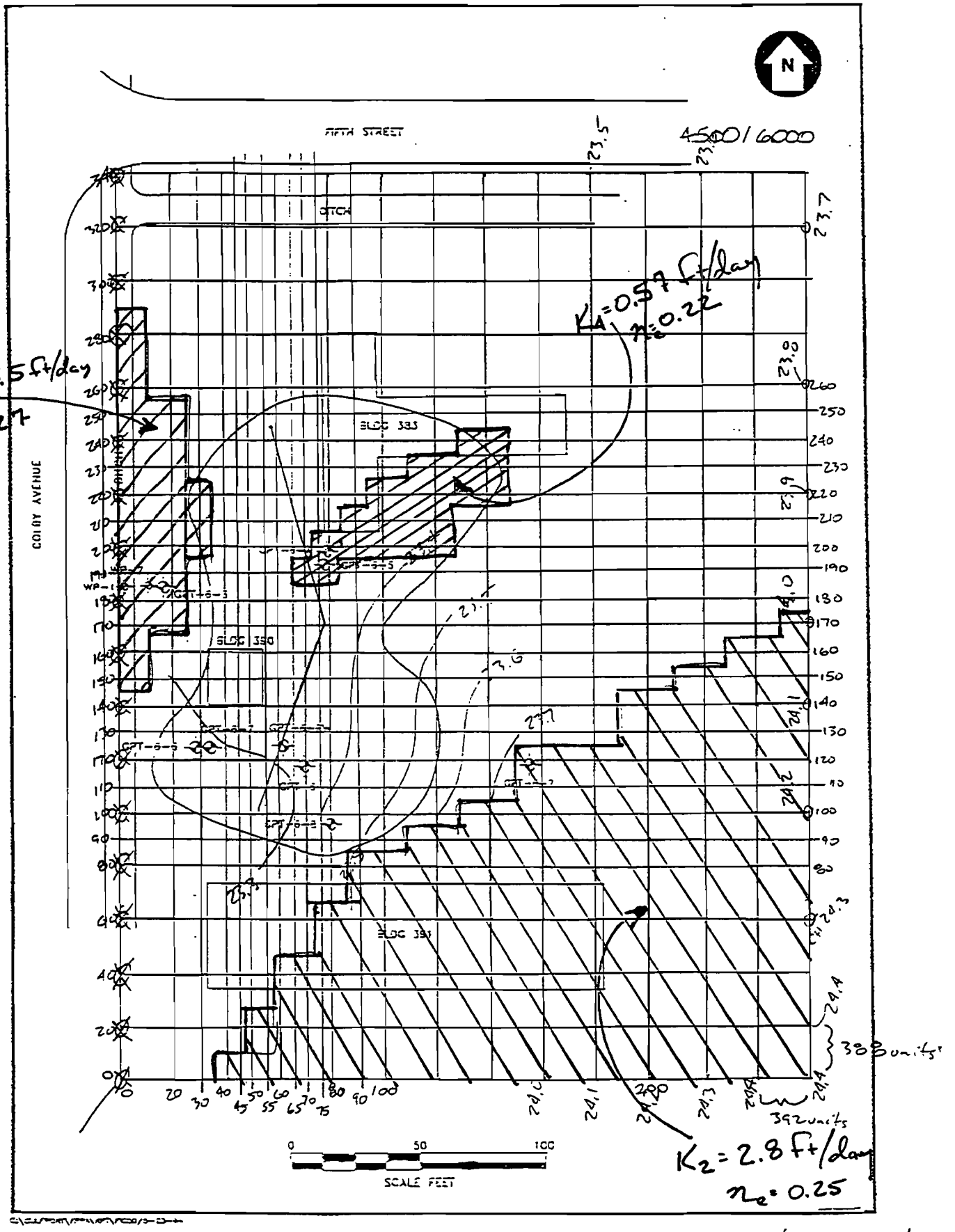


-600/-600

E-13

Hydraulic Conductivity

13/17 element rows/colu

14/18 grid rows/colum

NCBC GULFPORT SITE 6

FLOWPATH ITERATIONS

FILENAME: TRY S1

Baseline

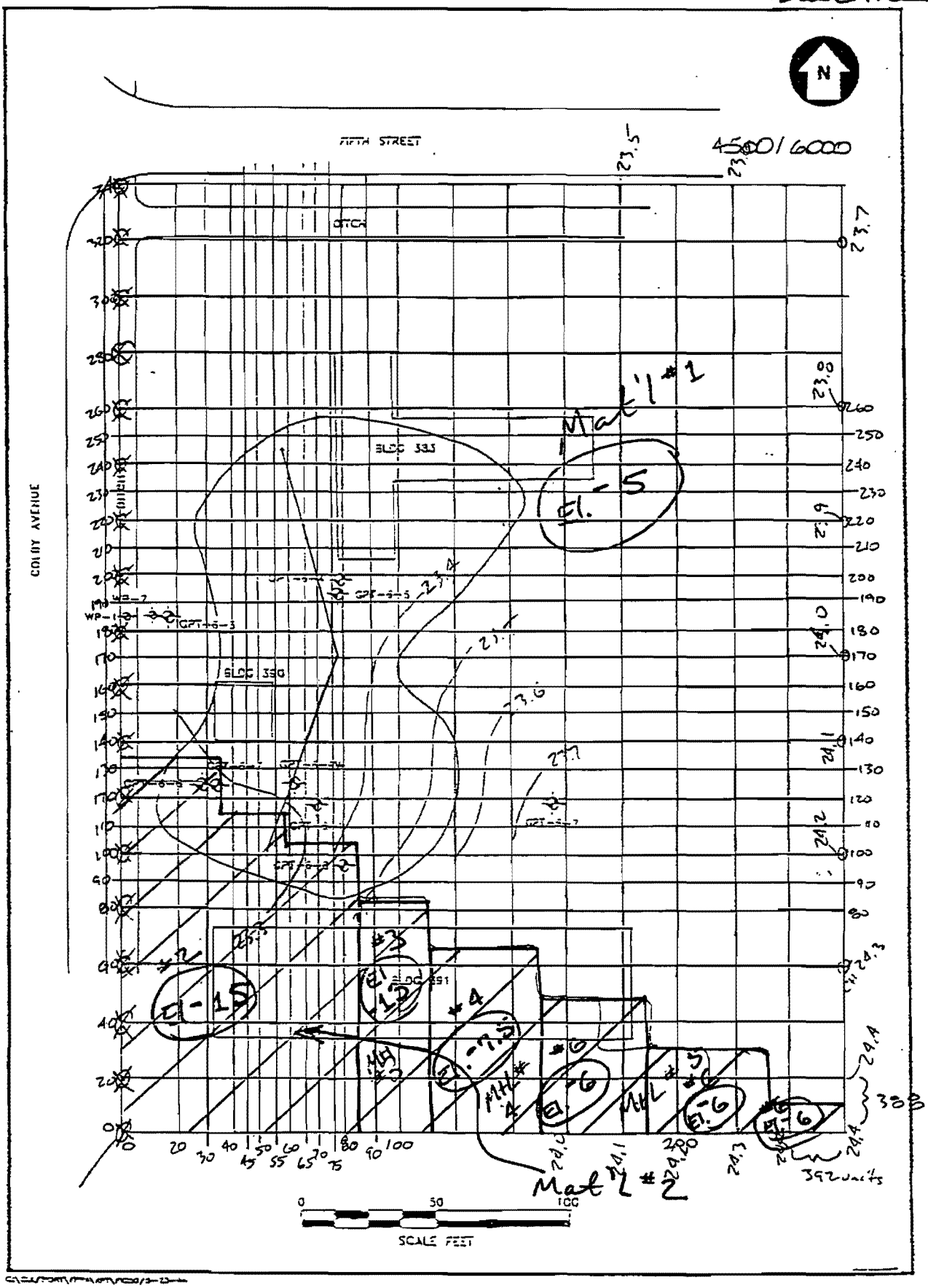


-600/-600

E-14

AQUIFER BOTTOM
Mat'l #1 = El. -5.0

13/17 element rows/colu
14/18 grid rows/colum

NCBC GULFPORT SITE 6

FLOWPATH ITERATIONS

FILENAME: TRY 51

Baseline

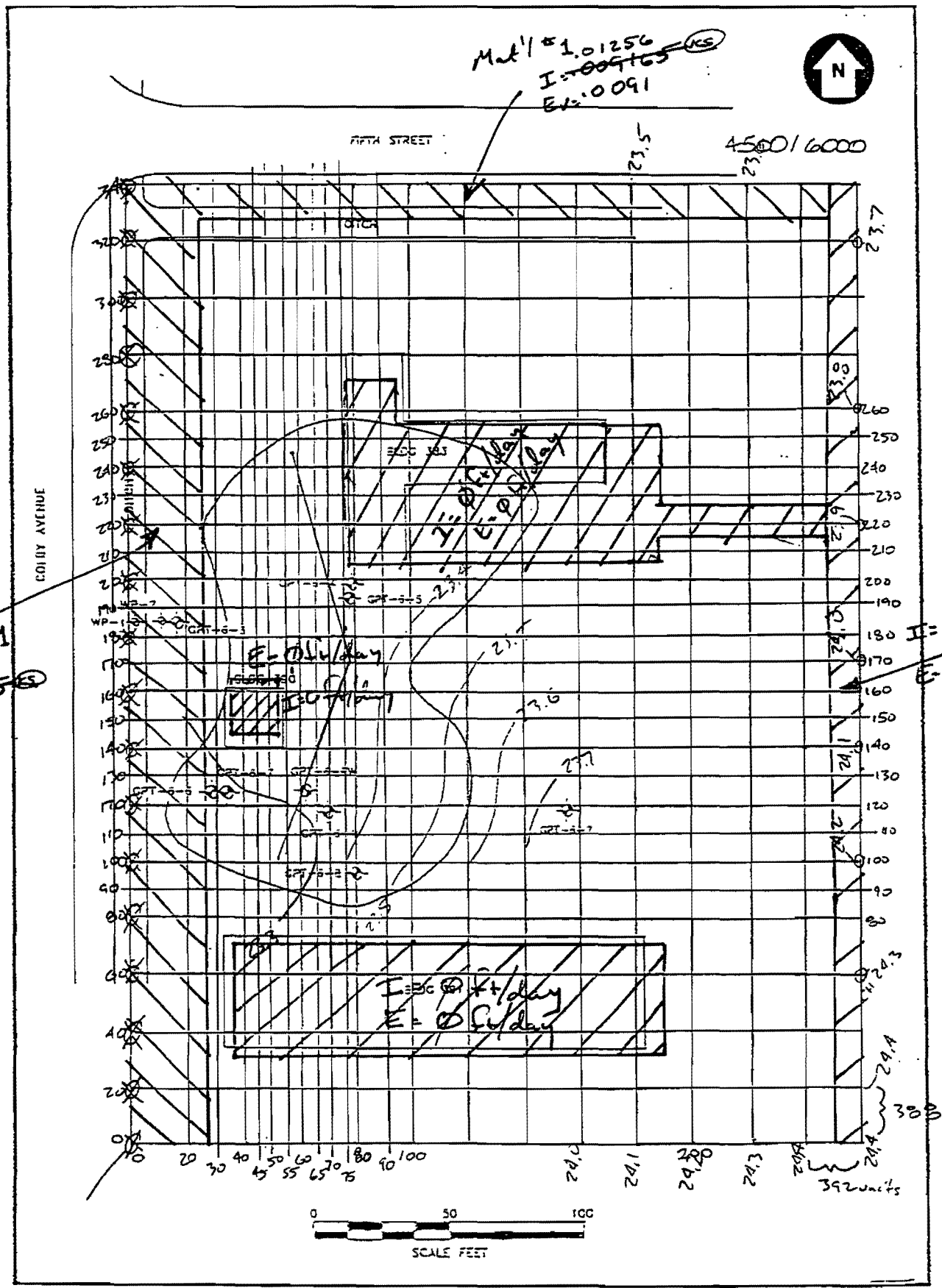


-600/-600

E-15

RECHARGE Mat'l #3 (overal)

I = 0.011 ~~.009165~~ (KS) f+/day

13/17 element rows/col.

14/18 grid rows/colu...

# NCBC Gulfport Site 6

FLOWPATH Modeling Task
Water Balance Results from Baseline Run, TR61
No Trench, No Pumping *07/23/94 kds*

**Units of all fluxes in [ft^3/d]**

| i | j | flux | CodeID | Node# | |
|---|---|---|---|---|---|
| 1 | 27 | -4.1746 | 1 | 1 | constant head |
| 1 | 26 | -8.1228 | 1 | 2 | constant head |
| 1 | 25 | -7.4889 | 1 | 3 | constant head |
| 1 | 24 | -8.5266 | 1 | 4 | constant head |
| 1 | 23 | -4.6500 | 1 | 5 | constant head |
| 1 | 22 | -6.7126 | 1 | 6 | constant head |
| 1 | 21 | -5.9528 | 1 | 7 | constant head |
| 1 | 20 | -5.7714 | 1 | 8 | constant head |
| 1 | 19 | -6.0451 | 1 | 9 | constant head |
| 1 | 18 | -5.9129 | 1 | 10 | constant head |
| 1 | 17 | -5.8753 | 1 | 11 | constant head |
| 1 | 16 | -5.4254 | 1 | 12 | constant head |
| 1 | 15 | -5.4308 | 1 | 13 | constant head |
| 1 | 14 | -6.0257 | 1 | 14 | constant head |
| 1 | 13 | -2.7124 | 1 | 15 | constant head |
| 1 | 12 | -3.5676 | 1 | 16 | constant head |
| 1 | 11 | -2.9856 | 1 | 17 | constant head |
| 1 | 10 | -4.6062 | 1 | 18 | constant head |
| 1 | 9 | -5.0021 | 1 | 19 | constant head |
| 1 | 8 | -5.1664 | 1 | 20 | constant head |
| 1 | 7 | -5.1617 | 1 | 21 | constant head |
| 1 | 6 | -5.2730 | 1 | 22 | constant head |
| 1 | 5 | -7.7890 | 1 | 23 | constant head |
| 1 | 4 | -9.1414 | 1 | 24 | constant head |
| 1 | 3 | -7.5175 | 1 | 25 | constant head |
| 1 | 2 | -8.0244 | 1 | 26 | constant head |
| 1 | 1 | -4.0460 | 1 | 27 | constant head |
| 4 | 3 | -18.9580 | 2 | 28 | constant head |
| 7 | 13 | -23.3489 | 2 | 29 | constant head |
| 17 | 1 | 6.0800 | 3 | 30 | constant head |
| 18 | 1 | 3.4609 | 3 | 31 | constant head |
| 19 | 1 | 3.6045 | 3 | 32 | constant head |
| 20 | 1 | 4.3523 | 3 | 33 | constant head |
| 21 | 1 | 9.9954 | 3 | 34 | constant head |
| 22 | 2 | 9.4046 | 3 | 35 | constant head |
| 22 | 4 | 9.7992 | 3 | 36 | constant head |
| 22 | 7 | 8.9523 | 3 | 37 | constant head |
| 22 | 11 | 9.2384 | 3 | 38 | constant head |
| 22 | 14 | 10.3851 | 3 | 39 | constant head |
| 22 | 19 | 12.4544 | 3 | 40 | constant head |
| 22 | 23 | 5.7809 | 3 | 41 | constant head |
| 22 | 26 | 3.8859 | 3 | 42 | constant head |
| 20 | 27 | -11.4230 | 3 | 43 | constant head |
| 18 | 27 | -24.9476 | 3 | 44 | constant head |

**Sum of all fluxes organized in Codes : 3**

| | | | |
|---|---|---|---|
| 1 | -157.1083 | CodeID | Total flux |
| 2 | -42.3069 | CodeID | Total flux |
| 3 | 61.0234 | CodeID | Total flux |

**Global water balance [ft^3/d] :**

| | |
|---|---|
| 97.3940 | total IN-flux through const. head nodes |
| -235.7858 | total OUT-flux through const. head nodes |
| 0.0000 | total IN-flux through flux nodes |
| 0.0000 | total OUT-flux through flux nodes |
| 0.0000 | total IN-flux through river nodes |
| 0.0000 | total OUT-flux through river nodes |
| 0.0000 | total IN-flux through injection wells |
| 0.0000 | total OUT-flux through pumping wells |
| 138.3552 | total net aquifer recharge |
| -0.0366 | sum of all fluxes should be zero |
| -0.0078% | total mass balance error |

# Simulation Domain and Boundary Conditions

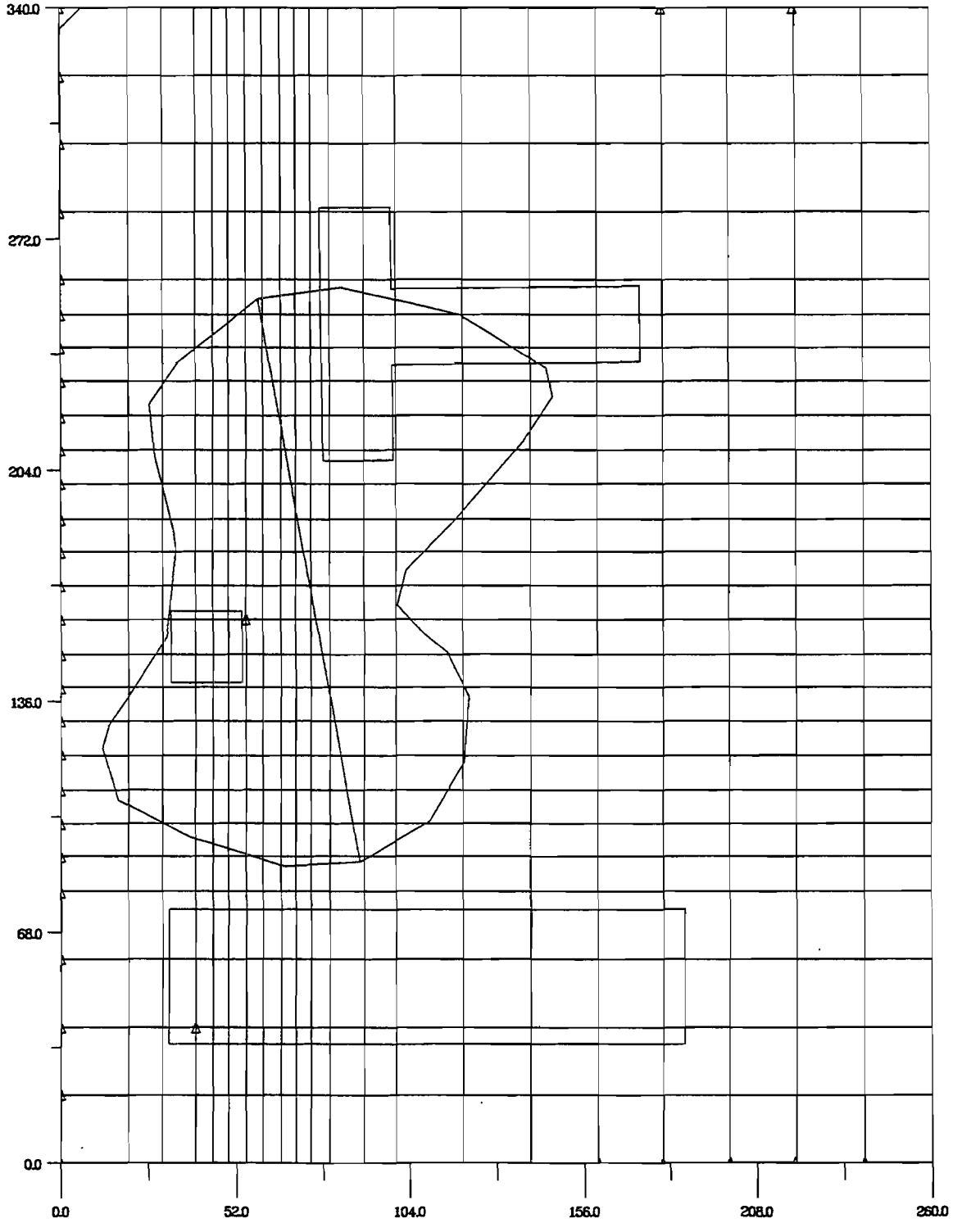


FLOWPA

Copyri

1989-1

by WHS

# Row

27

# Col

22

# Wel

0

Units

[ft]

File

TR61

Per_Spe.GLP
mlv.11.94

Hydraulic Head Distribution

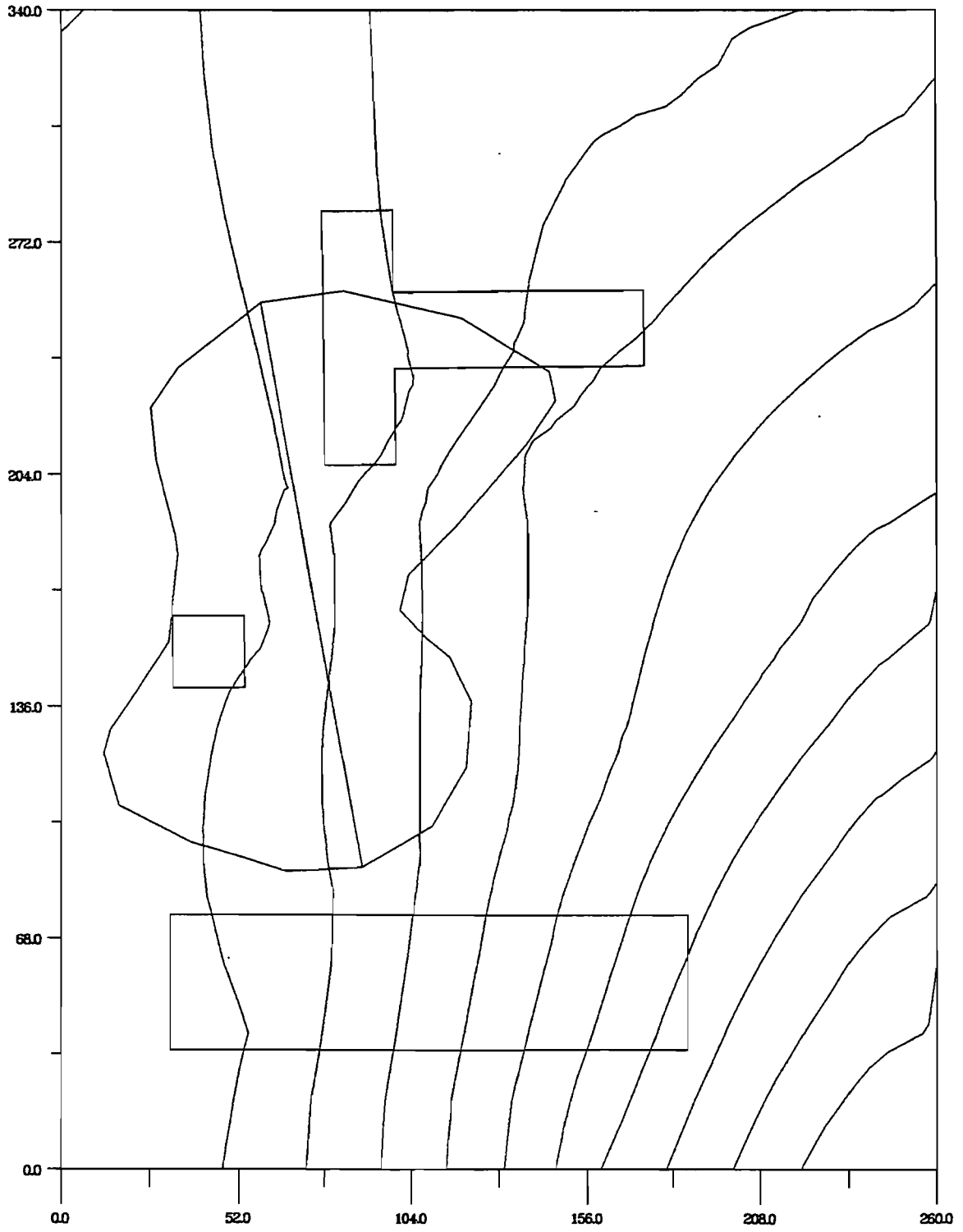


FLOWP

Copyri

1989-1

by WHS

Stead

State

Flow

Min :

2.3E+

Max :

2.4E+

Inc :

1.0E-

Units

[ft]

File

TR61

Per_Spe.GLP
mlv.11.94

# Velocity Distribution

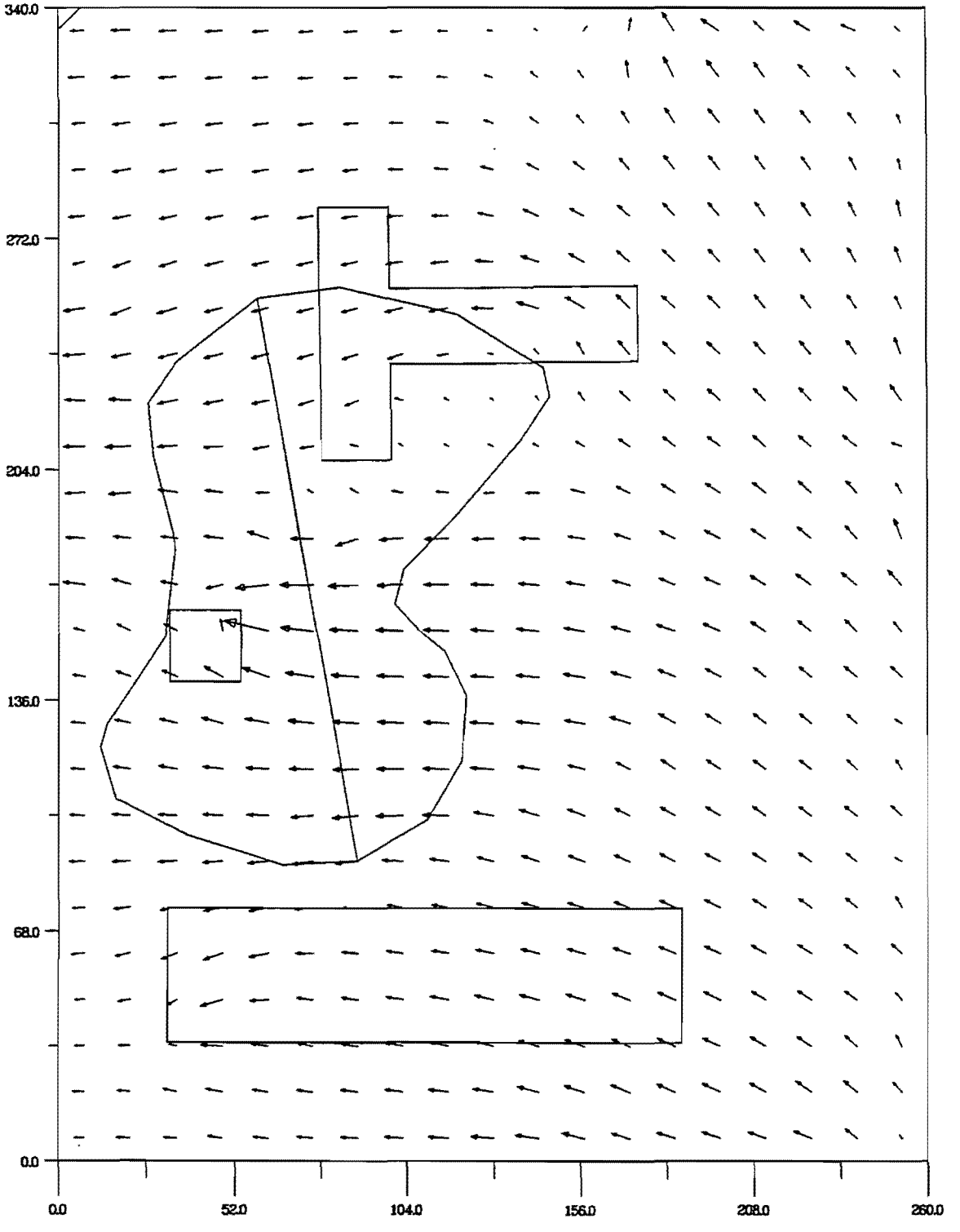


FLOWPA

Copyri

1989-1

by WHS

# Wel

0

Vmin

1.4E-

Vmax

1.4E-

Vavg

5.2E-

Angle

1.6E+

Units

[ft]

File

TR61

Per_Spe.GLP
mlv.11.94

# Pathlines

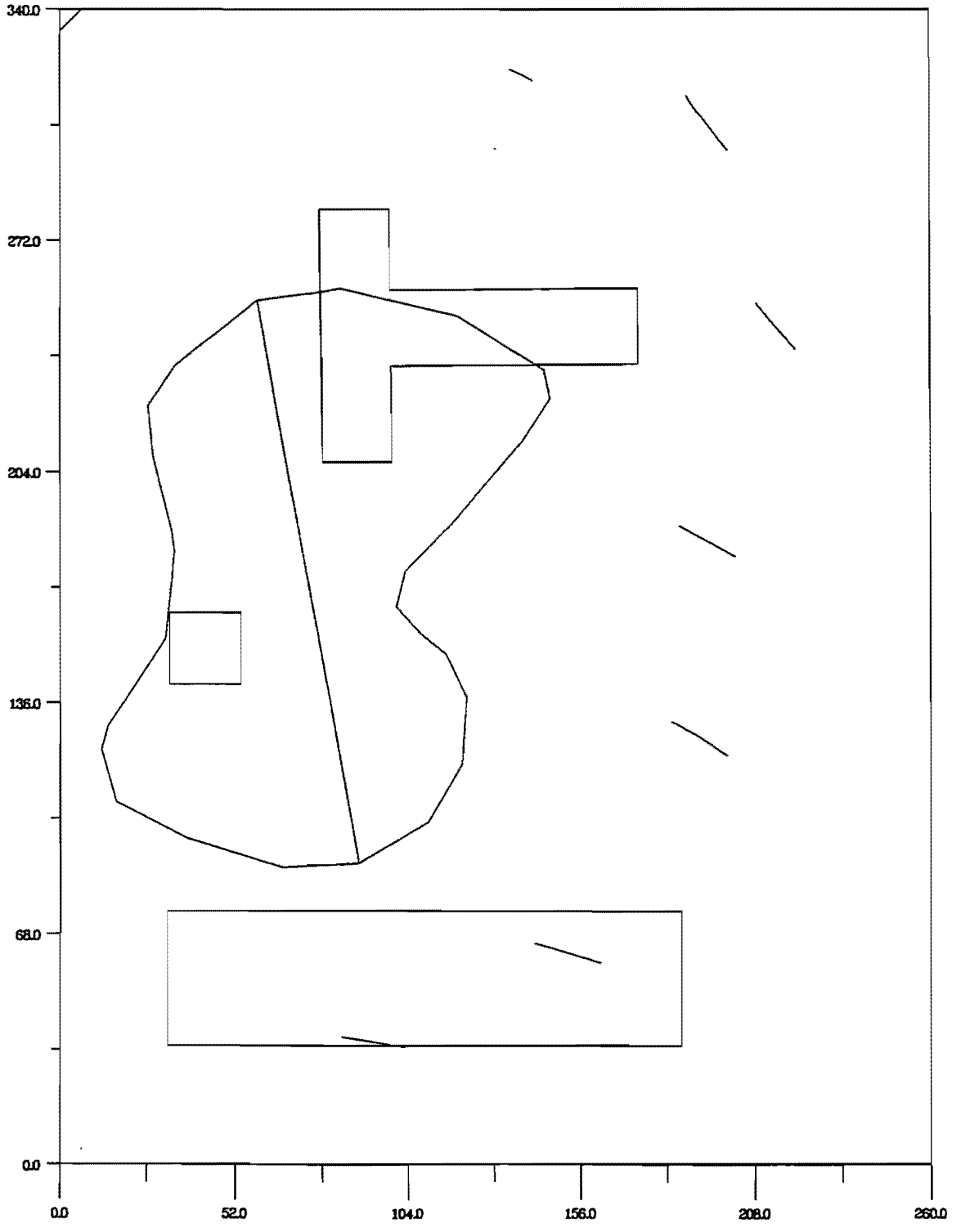


FLOWPATH

Copyright

1989–1992

by WHS

Steady

State

Flow

Time :

3.7E+0002 d

Retard :

1.0E+0000

Units :

ft

File :

TR51

Per_Spe.GLP
mlv.11.94

# Water Balance Results from Interceptor Trench, Constant Head

# NCBC Gulfport Site 6

FLOWPATH MODELING TASK
WATER BALANCE RESULTS FROM INTERCEPTOR TRENCH, CONSTANT HEAD
MAINTAINED AT 3-FT OF DRAWDOWN (EL. 20.4 FT), PARTIALLY PENETRATING TRENCH..
FLOW IS EQUIVALENT TO FLUX SUM FOR CODE ID#4. *07/23/94 KDS/RF*

```
*************************************************************
*          E C H O P R I N T                                *
*                                                           *
*          F L O W P A T H                                  *
*            version 4.3                                    *
*                                                           *
* FLOWPATH was written by Thomas Franz and Nilson Guiguer   *
*                                                           *
*************************************************************
*                                                           *
*          Copyright 1989-1993                              *
*                by                                         *
*        Waterloo Hydrogeologic Software                    *
*          200 Candlewood Crescent                          *
*            Waterloo, Ontario                              *
*             N2L 5Y9, Canada                               *
*                                                           *
*          ph (519) 746-1798                                *
*                                                           *
*************************************************************
```

FLOWPATH logbook for data set : TR62

Unit System : English units [ft/gal/d]

***** GRID PARAMETERS *****

Number of x-grid lines : 22

Number of y-grid lines : 27

Grid coordinates (x-grid lines) [ft] :

| | |
|---|---|
| 1 | 0.000E+0000 |
| 2 | 2.000E+0001 |
| 3 | 3.009E+0001 |
| 4 | 4.000E+0001 |
| 5 | 4.513E+0001 |
| 6 | 4.965E+0001 |
| 7 | 5.491E+0001 |
| 8 | 6.000E+0001 |
| 9 | 6.544E+0001 |
| 10 | 6.996E+0001 |
| 11 | 7.447E+0001 |
| 12 | 8.000E+0001 |
| 13 | 9.027E+0001 |
| 14 | 1.000E+0002 |
| 15 | 1.200E+0002 |
| 16 | 1.400E+0002 |
| 17 | 1.600E+0002 |
| 18 | 1.800E+0002 |
| 19 | 2.000E+0002 |
| 20 | 2.200E+0002 |
| 21 | 2.400E+0002 |
| 22 | 2.600E+0002 |

Grid coordinates (y-grid lines) [ft] :

| | |
|---|---|
| 1 | 0.000E+0000 |
| 2 | 2.000E+0001 |
| 3 | 4.000E+0001 |
| 4 | 6.000E+0001 |
| 5 | 8.000E+0001 |
| 6 | 9.027E+0001 |
| 7 | 1.000E+0002 |
| 8 | 1.098E+0002 |
| 9 | 1.200E+0002 |
| 10 | 1.301E+0002 |
| 11 | 1.400E+0002 |
| 12 | 1.497E+0002 |
| 13 | 1.600E+0002 |
| 14 | 1.700E+0002 |
| 15 | 1.800E+0002 |
| 16 | 1.896E+0002 |
| 17 | 2.000E+0002 |
| 18 | 2.099E+0002 |
| 19 | 2.200E+0002 |
| 20 | 2.302E+0002 |
| 21 | 2.400E+0002 |
| 22 | 2.497E+0002 |
| 23 | 2.600E+0002 |
| 24 | 2.800E+0002 |
| 25 | 3.000E+0002 |
| 26 | 3.200E+0002 |
| 27 | 3.400E+0002 |

***** WELL PARAMETERS *****

Number of wells : 0

***** CONSTRAINED HEAD NODES *****

Number of constant head nodes : 57

| No. | i | j | X [ft] | Y [ft] | const. head [ft] |
|---|---|---|---|---|---|
| 1 | 1 | 27 | 0.000E+0000 | 3.400E+0002 | 2.330E+0001 |
| 2 | 1 | 26 | 0.000E+0000 | 3.197E+0002 | 2.330E+0001 |
| 3 | 1 | 25 | 0.000E+0000 | 3.001E+0002 | 2.330E+0001 |
| 4 | 1 | 24 | 0.000E+0000 | 2.798E+0002 | 2.330E+0001 |
| 5 | 1 | 23 | 0.000E+0000 | 2.603E+0002 | 2.330E+0001 |
| 6 | 1 | 22 | 0.000E+0000 | 2.497E+0002 | 2.330E+0001 |
| 7 | 1 | 21 | 0.000E+0000 | 2.400E+0002 | 2.330E+0001 |
| 8 | 1 | 20 | 0.000E+0000 | 2.302E+0002 | 2.330E+0001 |
| 9 | 1 | 19 | 0.000E+0000 | 2.196E+0002 | 2.330E+0001 |
| 10 | 1 | 18 | 0.000E+0000 | 2.099E+0002 | 2.330E+0001 |
| 11 | 1 | 17 | 0.000E+0000 | 2.001E+0002 | 2.330E+0001 |
| 12 | 1 | 16 | 0.000E+0000 | 1.896E+0002 | 2.330E+0001 |
| 13 | 1 | 15 | 0.000E+0000 | 1.798E+0002 | 2.330E+0001 |
| 14 | 1 | 14 | 0.000E+0000 | 1.700E+0002 | 2.330E+0001 |
| 15 | 1 | 13 | 0.000E+0000 | 1.602E+0002 | 2.330E+0001 |
| 16 | 1 | 12 | 0.000E+0000 | 1.497E+0002 | 2.330E+0001 |
| 17 | 1 | 11 | 0.000E+0000 | 1.399E+0002 | 2.330E+0001 |
| 18 | 1 | 10 | 0.000E+0000 | 1.301E+0002 | 2.330E+0001 |
| 19 | 1 | 9 | 0.000E+0000 | 1.204E+0002 | 2.330E+0001 |
| 20 | 1 | 8 | 0.000E+0000 | 1.098E+0002 | 2.330E+0001 |
| 21 | 1 | 7 | 0.000E+0000 | 1.000E+0002 | 2.330E+0001 |
| 22 | 1 | 6 | 0.000E+0000 | 9.027E+0001 | 2.330E+0001 |
| 23 | 1 | 5 | 0.000E+0000 | 7.973E+0001 | 2.330E+0001 |
| 24 | 1 | 4 | 0.000E+0000 | 6.018E+0001 | 2.330E+0001 |

| | | | | | |
|---|---|---|---|---|---|
| 25 | 1 | 3 | 0.000E+0000 | 3.987E+0001 | 2.330E+0001 |
| 26 | 1 | 2 | 0.000E+0000 | 2.031E+0001 | 2.330E+0001 |
| 27 | 1 | 1 | 0.000E+0000 | 0.000E+0000 | 2.330E+0001 |
| 28 | 20 | 27 | 2.196E+0002 | 3.400E+0002 | 2.360E+0001 |
| 29 | 18 | 27 | 1.798E+0002 | 3.400E+0002 | 2.350E+0001 |
| 30 | 17 | 1 | 1.602E+0002 | 0.000E+0000 | 2.400E+0001 |
| 31 | 18 | 1 | 1.798E+0002 | 0.000E+0000 | 2.410E+0001 |
| 32 | 19 | 1 | 2.001E+0002 | 0.000E+0000 | 2.420E+0001 |
| 33 | 20 | 1 | 2.196E+0002 | 0.000E+0000 | 2.430E+0001 |
| 34 | 21 | 1 | 2.400E+0002 | 0.000E+0000 | 2.440E+0001 |
| 35 | 22 | 2 | 2.603E+0002 | 2.031E+0001 | 2.440E+0001 |
| 36 | 22 | 4 | 2.603E+0002 | 6.018E+0001 | 2.430E+0001 |
| 37 | 22 | 7 | 2.603E+0002 | 1.000E+0002 | 2.420E+0001 |
| 38 | 22 | 11 | 2.603E+0002 | 1.399E+0002 | 2.410E+0001 |
| 39 | 22 | 14 | 2.603E+0002 | 1.700E+0002 | 2.400E+0001 |
| 40 | 22 | 19 | 2.603E+0002 | 2.196E+0002 | 2.390E+0001 |
| 41 | 22 | 23 | 2.603E+0002 | 2.603E+0002 | 2.380E+0001 |
| 42 | 22 | 26 | 2.603E+0002 | 3.197E+0002 | 2.370E+0001 |
| 43 | 7 | 21 | 5.491E+0001 | 2.400E+0002 | 2.040E+0001 |
| 44 | 7 | 20 | 5.491E+0001 | 2.302E+0002 | 2.040E+0001 |
| 45 | 8 | 19 | 6.018E+0001 | 2.196E+0002 | 2.040E+0001 |
| 46 | 8 | 18 | 6.018E+0001 | 2.099E+0002 | 2.040E+0001 |
| 47 | 9 | 17 | 6.544E+0001 | 2.001E+0002 | 2.040E+0001 |
| 48 | 9 | 16 | 6.544E+0001 | 1.896E+0002 | 2.040E+0001 |
| 49 | 10 | 15 | 6.996E+0001 | 1.798E+0002 | 2.040E+0001 |
| 50 | 10 | 14 | 6.996E+0001 | 1.700E+0002 | 2.040E+0001 |
| 51 | 9 | 13 | 6.544E+0001 | 1.602E+0002 | 2.040E+0001 |
| 52 | 9 | 12 | 6.544E+0001 | 1.497E+0002 | 2.040E+0001 |
| 53 | 8 | 11 | 6.018E+0001 | 1.399E+0002 | 2.040E+0001 |
| 54 | 8 | 10 | 6.018E+0001 | 1.301E+0002 | 2.040E+0001 |
| 55 | 7 | 9 | 5.491E+0001 | 1.204E+0002 | 2.040E+0001 |
| 56 | 7 | 8 | 5.491E+0001 | 1.098E+0002 | 2.040E+0001 |
| 57 | 6 | 7 | 4.965E+0001 | 1.000E+0002 | 2.040E+0001 |

***** SPECIFIED FLUX NODES *****

Number of flux nodes : 2

| No. | i | j | X [ft] | Y [ft] | nodal flow [ft^3/ft^2/d] |
|---|---|---|---|---|---|
| 1 | 4 | 3 | 3.987E+0001 | 3.987E+0001 | -8.805E-0003 |
| 2 | 7 | 13 | 5.491E+0001 | 1.602E+0002 | -4.349E-0002 |

***** SURFACE WATER BODIES *****

Number of surface water body nodes : 0

***** AQUIFER PROPERTIES *****

Number of different material properties : 5

| No. | Kxx [ft/d] | Kyy [ft/d] | Porosity [-] | |
|---|---|---|---|---|
| 1 | 5.700E+0000 | 5.700E+0000 | 2.500E-0001 | (default) |
| 2 | 2.550E+0001 | 2.550E+0001 | 2.700E-0001 | |
| 3 | 5.700E-0001 | 5.700E-0001 | 2.200E-0001 | |
| 4 | 2.800E+0000 | 2.800E+0000 | 2.500E-0001 | |
| 5 | 2.268E+0002 | 2.268E+0002 | 3.300E-0001 | |

********** DISTRIBUTION OF AQUIFER MATERIAL PROPERTIES **********

| | 1 | 2 | 3 | 4 | 5 | 6 | 7 | 8 | 9 | 10 | 11 | 12 | 13 | 14 | 15 | 16 | 17 |
|---|---|---|---|---|---|---|---|---|---|---|---|---|---|---|---|---|---|
| 27 | 1 | 1 | 1 | 1 | 1 | 1 | 1 | 1 | 1 | 1 | 1 | 1 | 1 | 1 | 1 | 1 | 1 |
| 26 | 1 | 1 | 1 | 1 | 1 | 1 | 1 | 1 | 1 | 1 | 1 | 1 | 1 | 1 | 1 | 1 | 1 |
| 25 | 1 | 1 | 1 | 1 | 1 | 1 | 1 | 1 | 1 | 1 | 1 | 1 | 1 | 1 | 1 | 1 | 1 |
| 24 | 2 | 1 | 1 | 1 | 1 | 1 | 1 | 1 | 1 | 1 | 1 | 1 | 1 | 1 | 1 | 1 | 1 |
| 23 | 2 | 1 | 1 | 1 | 1 | 1 | 1 | 1 | 1 | 1 | 1 | 1 | 1 | 1 | 1 | 1 | 1 |
| 22 | 2 | 2 | 1 | 1 | 1 | 1 | 1 | 1 | 1 | 1 | 1 | 1 | 1 | 1 | 1 | 1 | 1 |
| 21 | 2 | 2 | 1 | 1 | 1 | 1 | 5 | 1 | 1 | 1 | 1 | 1 | 1 | 1 | 1 | 3 | 1 |
| 20 | 2 | 2 | 1 | 1 | 1 | 1 | 5 | 1 | 1 | 1 | 1 | 1 | 1 | 1 | 3 | 3 | 1 |
| 19 | 2 | 2 | 2 | 1 | 1 | 1 | 5 | 5 | 1 | 1 | 1 | 1 | 1 | 3 | 3 | 3 | 1 |
| 18 | 2 | 2 | 2 | 1 | 1 | 1 | 1 | 5 | 1 | 1 | 1 | 1 | 3 | 3 | 3 | 1 | 1 |
| 17 | 2 | 2 | 2 | 1 | 1 | 1 | 1 | 5 | 5 | 1 | 3 | 3 | 3 | 3 | 3 | 1 | 1 |
| 16 | 2 | 2 | 1 | 1 | 1 | 1 | 1 | 1 | 5 | 3 | 3 | 3 | 1 | 1 | 1 | 1 | 1 |
| 15 | 2 | 2 | 1 | 1 | 1 | 1 | 1 | 1 | 5 | 5 | 1 | 1 | 1 | 1 | 1 | 1 | 1 |
| 14 | 2 | 2 | 1 | 1 | 1 | 1 | 1 | 1 | 5 | 5 | 1 | 1 | 1 | 1 | 1 | 1 | 1 |
| 13 | 2 | 1 | 1 | 1 | 1 | 1 | 1 | 1 | 5 | 1 | 1 | 1 | 1 | 1 | 1 | 1 | 1 |
| 12 | 2 | 1 | 1 | 1 | 1 | 1 | 1 | 5 | 5 | 1 | 1 | 1 | 1 | 1 | 1 | 1 | 1 |
| 11 | 1 | 1 | 1 | 1 | 1 | 1 | 1 | 5 | 1 | 1 | 1 | 1 | 1 | 1 | 1 | 1 | 1 |
| 10 | 1 | 1 | 1 | 1 | 1 | 1 | 5 | 5 | 1 | 1 | 1 | 1 | 1 | 1 | 1 | 1 | 1 |
| 9 | 1 | 1 | 1 | 1 | 1 | 1 | 5 | 1 | 1 | 1 | 1 | 1 | 1 | 1 | 1 | 1 | 4 |
| 8 | 1 | 1 | 1 | 1 | 1 | 5 | 5 | 1 | 1 | 1 | 1 | 1 | 1 | 1 | 1 | 1 | 4 |
| 7 | 1 | 1 | 1 | 1 | 1 | 5 | 1 | 1 | 1 | 1 | 1 | 1 | 1 | 1 | 1 | 4 | 4 |
| 6 | 1 | 1 | 1 | 1 | 1 | 1 | 1 | 1 | 1 | 1 | 1 | 1 | 1 | 1 | 4 | 4 | 4 |
| 5 | 1 | 1 | 1 | 1 | 1 | 1 | 1 | 1 | 1 | 1 | 1 | 1 | 4 | 4 | 4 | 4 | 4 |
| 4 | 1 | 1 | 1 | 1 | 1 | 1 | 1 | 1 | 1 | 1 | 4 | 4 | 4 | 4 | 4 | 4 | 4 |
| 3 | 1 | 1 | 1 | 1 | 1 | 1 | 1 | 4 | 4 | 4 | 4 | 4 | 4 | 4 | 4 | 4 | 4 |
| 2 | 1 | 1 | 1 | 1 | 1 | 4 | 4 | 4 | 4 | 4 | 4 | 4 | 4 | 4 | 4 | 4 | 4 |
| 1 | 1 | 1 | 1 | 4 | 4 | 4 | 4 | 4 | 4 | 4 | 4 | 4 | 4 | 4 | 4 | 4 | 4 |
| | 1 | 2 | 3 | 4 | 5 | 6 | 7 | 8 | 9 | 10 | 11 | 12 | 13 | 14 | 15 | 16 | 17 |

| | 18 | 19 | 20 | 21 | 22 |
|---|---|---|---|---|---|
| 27 | 1 | 1 | 1 | 1 | 1 |
| 26 | 1 | 1 | 1 | 1 | 1 |
| 25 | 1 | 1 | 1 | 1 | 1 |
| 24 | 1 | 1 | 1 | 1 | 1 |
| 23 | 1 | 1 | 1 | 1 | 1 |
| 22 | 1 | 1 | 1 | 1 | 1 |
| 21 | 1 | 1 | 1 | 1 | 1 |
| 20 | 1 | 1 | 1 | 1 | 1 |
| 19 | 1 | 1 | 1 | 1 | 1 |
| 18 | 1 | 1 | 1 | 1 | 1 |
| 17 | 1 | 1 | 1 | 1 | 1 |
| 16 | 1 | 1 | 1 | 1 | 1 |
| 15 | 1 | 1 | 1 | 1 | 1 |
| 14 | 1 | 1 | 1 | 1 | 4 |
| 13 | 1 | 1 | 1 | 4 | 4 |
| 12 | 1 | 1 | 4 | 4 | 4 |
| 11 | 1 | 4 | 4 | 4 | 4 |
| 10 | 1 | 4 | 4 | 4 | 4 |
| 9 | 4 | 4 | 4 | 4 | 4 |
| 8 | 4 | 4 | 4 | 4 | 4 |
| 7 | 4 | 4 | 4 | 4 | 4 |
| 6 | 4 | 4 | 4 | 4 | 4 |
| 5 | 4 | 4 | 4 | 4 | 4 |
| 4 | 4 | 4 | 4 | 4 | 4 |
| 3 | 4 | 4 | 4 | 4 | 4 |
| 2 | 4 | 4 | 4 | 4 | 4 |
| 1 | 4 | 4 | 4 | 4 | 4 |
| | 18 | 19 | 20 | 21 | 22 |

***** AQUIFER TYPE *****

Unconfined aquifer

***** AQUIFER BOTTOM ELEVATIONS *****

Number of different aquifer bottom elevations : 6

| No. | aquifer bottom elevation [ft] |
|---|---|
| 1 | -5.000E+0000 (default) |
| 2 | -1.500E+0001 |
| 3 | -1.300E+0001 |
| 4 | -7.500E+0000 |
| 5 | -6.000E+0000 |
| 6 | 1.300E+0001 |

********** DISTRIBUTION OF AQUIFER BOTTOM ELEVATIONS **********

| | 1 | 2 | 3 | 4 | 5 | 6 | 7 | 8 | 9 | 10 | 11 | 12 | 13 | 14 | 15 | 16 | 17 |
|---|---|---|---|---|---|---|---|---|---|---|---|---|---|---|---|---|---|
| 27 | 1 | 1 | 1 | 1 | 1 | 1 | 1 | 1 | 1 | 1 | 1 | 1 | 1 | 1 | 1 | 1 | |
| 26 | 1 | 1 | 1 | 1 | 1 | 1 | 1 | 1 | 1 | 1 | 1 | 1 | 1 | 1 | 1 | 1 | |
| 25 | 1 | 1 | 1 | 1 | 1 | 1 | 1 | 1 | 1 | 1 | 1 | 1 | 1 | 1 | 1 | 1 | |
| 24 | 1 | 1 | 1 | 1 | 1 | 1 | 1 | 1 | 1 | 1 | 1 | 1 | 1 | 1 | 1 | 1 | |
| 23 | 1 | 1 | 1 | 1 | 1 | 1 | 1 | 1 | 1 | 1 | 1 | 1 | 1 | 1 | 1 | 1 | |
| 22 | 1 | 1 | 1 | 1 | 1 | 1 | 1 | 1 | 1 | 1 | 1 | 1 | 1 | 1 | 1 | 1 | |
| 21 | 1 | 1 | 1 | 1 | 1 | 1 | 6 | 1 | 1 | 1 | 1 | 1 | 1 | 1 | 1 | 1 | |
| 20 | 1 | 1 | 1 | 1 | 1 | 1 | 6 | 1 | 1 | 1 | 1 | 1 | 1 | 1 | 1 | 1 | |
| 19 | 1 | 1 | 1 | 1 | 1 | 1 | 6 | 6 | 1 | 1 | 1 | 1 | 1 | 1 | 1 | 1 | |
| 18 | 1 | 1 | 1 | 1 | 1 | 1 | 1 | 6 | 1 | 1 | 1 | 1 | 1 | 1 | 1 | 1 | |
| 17 | 1 | 1 | 1 | 1 | 1 | 1 | 1 | 6 | 6 | 1 | 1 | 1 | 1 | 1 | 1 | 1 | |
| 16 | 1 | 1 | 1 | 1 | 1 | 1 | 1 | 1 | 6 | 1 | 1 | 1 | 1 | 1 | 1 | 1 | |
| 15 | 1 | 1 | 1 | 1 | 1 | 1 | 1 | 1 | 6 | 6 | 1 | 1 | 1 | 1 | 1 | 1 | |
| 14 | 1 | 1 | 1 | 1 | 1 | 1 | 1 | 1 | 6 | 6 | 1 | 1 | 1 | 1 | 1 | 1 | |
| 13 | 1 | 1 | 1 | 1 | 1 | 1 | 1 | 1 | 6 | 1 | 1 | 1 | 1 | 1 | 1 | 1 | |
| 12 | 1 | 1 | 1 | 1 | 1 | 1 | 1 | 6 | 6 | 1 | 1 | 1 | 1 | 1 | 1 | 1 | |
| 11 | 1 | 1 | 1 | 1 | 1 | 1 | 1 | 6 | 1 | 1 | 1 | 1 | 1 | 1 | 1 | 1 | |
| 10 | 2 | 2 | 2 | 1 | 1 | 1 | 6 | 6 | 1 | 1 | 1 | 1 | 1 | 1 | 1 | 1 | |
| 9 | 2 | 2 | 2 | 1 | 1 | 1 | 6 | 1 | 1 | 1 | 1 | 1 | 1 | 1 | 1 | 1 | |
| 8 | 2 | 2 | 2 | 2 | 2 | 6 | 6 | 1 | 1 | 1 | 1 | 1 | 1 | 1 | 1 | 1 | |
| 7 | 2 | 2 | 2 | 2 | 2 | 6 | 2 | 2 | 2 | 2 | 2 | 2 | 1 | 1 | 1 | 1 | |
| 6 | 2 | 2 | 2 | 2 | 2 | 2 | 2 | 2 | 2 | 2 | 2 | 2 | 1 | 1 | 1 | 1 | |
| 5 | 2 | 2 | 2 | 2 | 2 | 2 | 2 | 2 | 2 | 2 | 2 | 2 | 3 | 3 | 1 | 1 | |
| 4 | 2 | 2 | 2 | 2 | 2 | 2 | 2 | 2 | 2 | 2 | 2 | 2 | 3 | 3 | 4 | 4 | 1 |
| 3 | 2 | 2 | 2 | 2 | 2 | 2 | 2 | 2 | 2 | 2 | 2 | 2 | 3 | 3 | 4 | 4 | 5 |
| 2 | 2 | 2 | 2 | 2 | 2 | 2 | 2 | 2 | 2 | 2 | 2 | 2 | 3 | 3 | 4 | 4 | 5 |
| 1 | 2 | 2 | 2 | 2 | 2 | 2 | 2 | 2 | 2 | 2 | 2 | 2 | 3 | 3 | 4 | 4 | 5 |

| | 18 | 19 | 20 | 21 | 22 |
|---|---|---|---|---|---|
| 27 | 1 | 1 | 1 | 1 | 1 |
| 26 | 1 | 1 | 1 | 1 | 1 |
| 25 | 1 | 1 | 1 | 1 | 1 |
| 24 | 1 | 1 | 1 | 1 | 1 |
| 23 | 1 | 1 | 1 | 1 | 1 |
| 22 | 1 | 1 | 1 | 1 | 1 |
| 21 | 1 | 1 | 1 | 1 | 1 |
| 20 | 1 | 1 | 1 | 1 | 1 |
| 19 | 1 | 1 | 1 | 1 | 1 |
| 18 | 1 | 1 | 1 | 1 | 1 |
| 17 | 1 | 1 | 1 | 1 | 1 |

| | 18 | 19 | 20 | 21 | 22 |
|---|---|---|---|---|---|
| 16 | 1 | 1 | 1 | 1 | 1 |
| 15 | 1 | 1 | 1 | 1 | 1 |
| 14 | 1 | 1 | 1 | 1 | 1 |
| 13 | 1 | 1 | 1 | 1 | 1 |
| 12 | 1 | 1 | 1 | 1 | 1 |
| 11 | 1 | 1 | 1 | 1 | 1 |
| 10 | 1 | 1 | 1 | 1 | 1 |
| 9 | 1 | 1 | 1 | 1 | 1 |
| 8 | 1 | 1 | 1 | 1 | 1 |
| 7 | 1 | 1 | 1 | 1 | 1 |
| 6 | 1 | 1 | 1 | 1 | 1 |
| 5 | 1 | 1 | 1 | 1 | 1 |
| 4 | 1 | 1 | 1 | 1 | 1 |
| 3 | 5 | 1 | 1 | 1 | 1 |
| 2 | 5 | 5 | 5 | 1 | 1 |
| 1 | 5 | 5 | 5 | 5 | 5 |

***** AREAL RECHARGE *****

Number of different infiltration/evapotranspiration rates : 3

| No. | infiltration [L/T] | evapotranspiration [L/T] | effective recharge [L/T] | |
|---|---|---|---|---|
| 1 | 1.100E-0002 | 9.100E-0003 | 1.900E-0003 | (default) |
| 1 | 1.250E-0002 | 9.100E-0003 | 3.400E-0003 | |
| 1 | 0.000E+0000 | 0.000E+0000 | 0.000E+0000 | |

********** DISTRIBUTION OF AREAL IN/OUT-FLUXES **********

| | 1 | 2 | 3 | 4 | 5 | 6 | 7 | 8 | 9 | 10 | 11 | 12 | 13 | 14 | 15 | 16 | 17 |
|---|---|---|---|---|---|---|---|---|---|---|---|---|---|---|---|---|---|
| 27 | 2 | 2 | 2 | 2 | 2 | 2 | 2 | 2 | 2 | 2 | 2 | 2 | 2 | 2 | 2 | 2 | 2 |
| 26 | 2 | 2 | 1 | 1 | 1 | 1 | 1 | 1 | 1 | 1 | 1 | 1 | 1 | 1 | 1 | 1 | 1 |
| 25 | 2 | 2 | 1 | 1 | 1 | 1 | 1 | 1 | 1 | 1 | 1 | 1 | 1 | 1 | 1 | 1 | 1 |
| 24 | 2 | 2 | 1 | 1 | 1 | 1 | 1 | 1 | 1 | 1 | 1 | 1 | 1 | 1 | 1 | 1 | 1 |
| 23 | 2 | 2 | 1 | 1 | 1 | 1 | 1 | 1 | 1 | 1 | 1 | 3 | 3 | 1 | 1 | 1 | 1 |
| 22 | 2 | 2 | 1 | 1 | 1 | 1 | 1 | 1 | 1 | 1 | 1 | 3 | 3 | 3 | 3 | 3 | 3 |
| 21 | 2 | 2 | 1 | 1 | 1 | 1 | 1 | 1 | 1 | 1 | 1 | 3 | 3 | 3 | 3 | 3 | 3 |
| 20 | 2 | 2 | 1 | 1 | 1 | 1 | 1 | 1 | 1 | 1 | 1 | 3 | 3 | 3 | 3 | 3 | 3 |
| 19 | 2 | 2 | 1 | 1 | 1 | 1 | 1 | 1 | 1 | 1 | 1 | 3 | 3 | 3 | 3 | 3 | 3 |
| 18 | 2 | 2 | 1 | 1 | 1 | 1 | 1 | 1 | 1 | 1 | 1 | 3 | 3 | 3 | 3 | 3 | 3 |
| 17 | 2 | 2 | 1 | 1 | 1 | 1 | 1 | 1 | 1 | 1 | 1 | 1 | 1 | 1 | 1 | 1 | 1 |
| 16 | 2 | 2 | 1 | 1 | 1 | 1 | 1 | 1 | 1 | 1 | 1 | 1 | 1 | 1 | 1 | 1 | 1 |
| 15 | 2 | 2 | 1 | 1 | 1 | 1 | 1 | 1 | 1 | 1 | 1 | 1 | 1 | 1 | 1 | 1 | 1 |
| 14 | 2 | 2 | 1 | 1 | 1 | 1 | 1 | 1 | 1 | 1 | 1 | 1 | 1 | 1 | 1 | 1 | 1 |
| 13 | 2 | 2 | 1 | 3 | 3 | 3 | 1 | 1 | 1 | 1 | 1 | 1 | 1 | 1 | 1 | 1 | 1 |
| 12 | 2 | 2 | 1 | 3 | 3 | 3 | 1 | 1 | 1 | 1 | 1 | 1 | 1 | 1 | 1 | 1 | 1 |
| 11 | 2 | 2 | 1 | 1 | 1 | 1 | 1 | 1 | 1 | 1 | 1 | 1 | 1 | 1 | 1 | 1 | 1 |
| 10 | 2 | 2 | 1 | 1 | 1 | 1 | 1 | 1 | 1 | 1 | 1 | 1 | 1 | 1 | 1 | 1 | 1 |
| 9 | 2 | 2 | 1 | 1 | 1 | 1 | 1 | 1 | 1 | 1 | 1 | 1 | 1 | 1 | 1 | 1 | 1 |
| 8 | 2 | 2 | 1 | 1 | 1 | 1 | 1 | 1 | 1 | 1 | 1 | 1 | 1 | 1 | 1 | 1 | 1 |
| 7 | 2 | 2 | 1 | 1 | 1 | 1 | 1 | 1 | 1 | 1 | 1 | 1 | 1 | 1 | 1 | 1 | 1 |
| 6 | 2 | 2 | 1 | 1 | 1 | 1 | 1 | 1 | 1 | 1 | 1 | 1 | 1 | 1 | 1 | 1 | 1 |
| 5 | 2 | 2 | 1 | 1 | 1 | 1 | 1 | 1 | 1 | 1 | 1 | 1 | 1 | 1 | 1 | 1 | 1 |
| 4 | 2 | 2 | 1 | 3 | 3 | 3 | 3 | 3 | 3 | 3 | 3 | 3 | 3 | 3 | 3 | 3 | 3 |
| 3 | 2 | 2 | 1 | 3 | 3 | 3 | 3 | 3 | 3 | 3 | 3 | 3 | 3 | 3 | 3 | 3 | 3 |
| 2 | 2 | 2 | 1 | 1 | 1 | 1 | 1 | 1 | 1 | 1 | 1 | 1 | 1 | 1 | 1 | 1 | 1 |
| 1 | 2 | 2 | 1 | 1 | 1 | 1 | 1 | 1 | 1 | 1 | 1 | 1 | 1 | 1 | 1 | 1 | 1 |

| | 18 | 19 | 20 | 21 | 22 |
|---|---|---|---|---|---|

| | | | | | |
|---|---|---|---|---|---|
| 27 | 2 | 2 | 2 | 2 | 3 |
| 26 | 1 | 1 | 1 | 1 | 3 |
| 25 | 1 | 1 | 1 | 1 | 3 |
| 24 | 1 | 1 | 1 | 1 | 3 |
| 23 | 1 | 1 | 1 | 1 | 3 |
| 22 | 3 | 1 | 1 | 1 | 3 |
| 21 | 3 | 1 | 1 | 1 | 3 |
| 20 | 3 | 3 | 3 | 3 | 3 |
| 19 | 3 | 1 | 1 | 1 | 3 |
| 18 | 3 | 1 | 1 | 1 | 3 |
| 17 | 1 | 1 | 1 | 1 | 3 |
| 16 | 1 | 1 | 1 | 1 | 3 |
| 15 | 1 | 1 | 1 | 1 | 3 |
| 14 | 1 | 1 | 1 | 1 | 3 |
| 13 | 1 | 1 | 1 | 1 | 3 |
| 12 | 1 | 1 | 1 | 1 | 3 |
| 11 | 1 | 1 | 1 | 1 | 3 |
| 10 | 1 | 1 | 1 | 1 | 3 |
| 9 | 1 | 1 | 1 | 1 | 3 |
| 8 | 1 | 1 | 1 | 1 | 3 |
| 7 | 1 | 1 | 1 | 1 | 3 |
| 6 | 1 | 1 | 1 | 1 | 3 |
| 5 | 1 | 1 | 1 | 1 | 3 |
| 4 | 3 | 1 | 1 | 1 | 3 |
| 3 | 3 | 1 | 1 | 1 | 3 |
| 2 | 1 | 1 | 1 | 1 | 3 |
| 1 | 1 | 1 | 1 | 1 | 3 |
| | 18 | 19 | 20 | 21 | 22 |

***** PATHLINE & PARTICLE TRACKING DATA *****

Number of forward particles : 43

| No. | x-release | y-release |
|---|---|---|
| 1 | 3.313E+0001 | 1.702E+0002 |
| 2 | 3.436E+0001 | 1.800E+0002 |
| 3 | 3.190E+0001 | 1.898E+0002 |
| 4 | 3.067E+0001 | 2.009E+0002 |
| 5 | 2.822E+0001 | 2.095E+0002 |
| 6 | 2.699E+0001 | 2.205E+0002 |
| 7 | 3.067E+0001 | 2.303E+0002 |
| 8 | 4.049E+0001 | 2.401E+0002 |
| 9 | 5.153E+0001 | 2.487E+0002 |
| 10 | 6.258E+0001 | 2.561E+0002 |
| 11 | 7.730E+0001 | 2.573E+0002 |
| 12 | 9.080E+0001 | 2.561E+0002 |
| 13 | 1.006E+0002 | 2.536E+0002 |
| 14 | 1.190E+0002 | 2.500E+0002 |
| 15 | 1.350E+0002 | 2.401E+0002 |
| 16 | 1.460E+0002 | 2.303E+0002 |
| 17 | 1.423E+0002 | 2.193E+0002 |
| 18 | 1.337E+0002 | 2.082E+0002 |
| 19 | 1.252E+0002 | 1.972E+0002 |
| 20 | 1.153E+0002 | 1.874E+0002 |
| 21 | 1.055E+0002 | 1.776E+0002 |
| 22 | 1.006E+0002 | 1.641E+0002 |
| 23 | 1.092E+0002 | 1.543E+0002 |
| 24 | 1.202E+0002 | 1.408E+0002 |
| 25 | 1.215E+0002 | 1.260E+0002 |
| 26 | 1.178E+0002 | 1.138E+0002 |
| 27 | 1.092E+0002 | 1.003E+0002 |
| 28 | 9.202E+0001 | 9.045E+0001 |
| 29 | 6.994E+0001 | 8.800E+0001 |
| 30 | 4.908E+0001 | 9.290E+0001 |

| | | |
|---|---|---|
| 31 | 3.067E+0001 | 9.904E+0001 |
| 32 | 1.595E+0001 | 1.101E+0002 |
| 33 | 1.350E+0001 | 1.260E+0002 |
| 34 | 2.086E+0001 | 1.395E+0002 |
| 35 | 2.699E+0001 | 1.481E+0002 |
| 36 | 3.190E+0001 | 1.592E+0002 |
| 37 | 2.001E+0002 | 9.102E+0001 |
| 38 | 2.023E+0002 | 1.700E+0002 |
| 39 | 2.001E+0002 | 2.490E+0002 |
| 40 | 1.617E+0002 | 3.122E+0002 |
| 41 | 1.414E+0002 | 2.783E+0001 |
| 42 | 8.049E+0001 | 1.881E+0001 |
| 43 | 9.177E+0001 | 3.189E+0002 |

Number of reverse particles : 16

| No. | x-release | y-release |
|---|---|---|
| 1 | 6.135E+0001 | 2.401E+0002 |
| 2 | 6.626E+0001 | 2.266E+0002 |
| 3 | 6.994E+0001 | 2.095E+0002 |
| 4 | 7.485E+0001 | 1.886E+0002 |
| 5 | 7.975E+0001 | 1.702E+0002 |
| 6 | 7.362E+0001 | 1.493E+0002 |
| 7 | 6.626E+0001 | 1.309E+0002 |
| 8 | 5.521E+0001 | 1.101E+0002 |
| 9 | 5.031E+0001 | 9.904E+0001 |
| 10 | 6.135E+0001 | 1.199E+0002 |
| 11 | 6.994E+0001 | 1.395E+0002 |
| 12 | 7.853E+0001 | 1.604E+0002 |
| 13 | 7.730E+0001 | 1.800E+0002 |
| 14 | 7.239E+0001 | 1.997E+0002 |
| 15 | 6.748E+0001 | 2.168E+0002 |
| 16 | 6.258E+0001 | 2.340E+0002 |

No well particles specified

********** HYDRAULIC HEAD DISTRIBUTION **********

| | 1 | 2 | 3 | 4 | 5 | 6 |
|---|---|---|---|---|---|---|
| 27 | 2.33E+0001 | 2.31E+0001 | 2.30E+0001 | 2.29E+0001 | 2.29E+0001 | 2.29E+0001 |
| 26 | 2.33E+0001 | 2.31E+0001 | 2.30E+0001 | 2.29E+0001 | 2.29E+0001 | 2.28E+0001 |
| 25 | 2.33E+0001 | 2.31E+0001 | 2.29E+0001 | 2.28E+0001 | 2.28E+0001 | 2.27E+0001 |
| 24 | 2.33E+0001 | 2.30E+0001 | 2.28E+0001 | 2.27E+0001 | 2.26E+0001 | 2.25E+0001 |
| 23 | 2.33E+0001 | 2.30E+0001 | 2.27E+0001 | 2.24E+0001 | 2.22E+0001 | 2.21E+0001 |
| 22 | 2.33E+0001 | 2.30E+0001 | 2.27E+0001 | 2.22E+0001 | 2.19E+0001 | 2.17E+0001 |
| 21 | 2.33E+0001 | 2.30E+0001 | 2.26E+0001 | 2.19E+0001 | 2.15E+0001 | 2.10E+0001 |
| 20 | 2.33E+0001 | 2.30E+0001 | 2.26E+0001 | 2.19E+0001 | 2.14E+0001 | 2.10E+0001 |
| 19 | 2.33E+0001 | 2.29E+0001 | 2.27E+0001 | 2.21E+0001 | 2.15E+0001 | 2.10E+0001 |
| 18 | 2.33E+0001 | 2.29E+0001 | 2.27E+0001 | 2.21E+0001 | 2.17E+0001 | 2.12E+0001 |
| 17 | 2.33E+0001 | 2.29E+0001 | 2.27E+0001 | 2.21E+0001 | 2.17E+0001 | 2.13E+0001 |
| 16 | 2.33E+0001 | 2.29E+0001 | 2.26E+0001 | 2.20E+0001 | 2.17E+0001 | 2.14E+0001 |
| 15 | 2.33E+0001 | 2.29E+0001 | 2.26E+0001 | 2.20E+0001 | 2.16E+0001 | 2.13E+0001 |
| 14 | 2.33E+0001 | 2.29E+0001 | 2.25E+0001 | 2.19E+0001 | 2.16E+0001 | 2.13E+0001 |
| 13 | 2.33E+0001 | 2.28E+0001 | 2.23E+0001 | 2.17E+0001 | 2.15E+0001 | 2.12E+0001 |
| 12 | 2.33E+0001 | 2.26E+0001 | 2.21E+0001 | 2.16E+0001 | 2.13E+0001 | 2.11E+0001 |
| 11 | 2.33E+0001 | 2.25E+0001 | 2.20E+0001 | 2.15E+0001 | 2.12E+0001 | 2.09E+0001 |
| 10 | 2.33E+0001 | 2.25E+0001 | 2.20E+0001 | 2.14E+0001 | 2.11E+0001 | 2.08E+0001 |
| 9 | 2.33E+0001 | 2.24E+0001 | 2.19E+0001 | 2.14E+0001 | 2.10E+0001 | 2.07E+0001 |
| 8 | 2.33E+0001 | 2.24E+0001 | 2.19E+0001 | 2.13E+0001 | 2.09E+0001 | 2.04E+0001 |
| 7 | 2.33E+0001 | 2.25E+0001 | 2.20E+0001 | 2.14E+0001 | 2.10E+0001 | 2.04E+0001 |
| 6 | 2.33E+0001 | 2.26E+0001 | 2.22E+0001 | 2.17E+0001 | 2.15E+0001 | 2.14E+0001 |
| 5 | 2.33E+0001 | 2.27E+0001 | 2.23E+0001 | 2.21E+0001 | 2.19E+0001 | 2.19E+0001 |
| 4 | 2.33E+0001 | 2.29E+0001 | 2.26E+0001 | 2.25E+0001 | 2.24E+0001 | 2.23E+0001 |

| | | | | | | |
|---|---|---|---|---|---|---|
| 3 | 2.33E+0001 | 2.30E+0001 | 2.28E+0001 | 2.27E+0001 | 2.27E+0001 | 2.26E+0001 |
| 2 | 2.33E+0001 | 2.31E+0001 | 2.30E+0001 | 2.29E+0001 | 2.28E+0001 | 2.28E+0001 |
| 1 | 2.33E+0001 | 2.31E+0001 | 2.30E+0001 | 2.29E+0001 | 2.29E+0001 | 2.28E+0001 |
| | 1 | 2 | 3 | 4 | 5 | 6 |
| | 7 | 8 | 9 | 10 | 11 | 12 |
| 27 | 2.28E+0001 | 2.28E+0001 | 2.28E+0001 | 2.28E+0001 | 2.28E+0001 | 2.28E+0001 |
| 26 | 2.28E+0001 | 2.28E+0001 | 2.28E+0001 | 2.27E+0001 | 2.27E+0001 | 2.27E+0001 |
| 25 | 2.27E+0001 | 2.27E+0001 | 2.26E+0001 | 2.26E+0001 | 2.26E+0001 | 2.26E+0001 |
| 24 | 2.25E+0001 | 2.24E+0001 | 2.24E+0001 | 2.24E+0001 | 2.23E+0001 | 2.24E+0001 |
| 23 | 2.20E+0001 | 2.19E+0001 | 2.19E+0001 | 2.19E+0001 | 2.19E+0001 | 2.20E+0001 |
| 22 | 2.15E+0001 | 2.15E+0001 | 2.15E+0001 | 2.16E+0001 | 2.16E+0001 | 2.17E+0001 |
| 21 | 2.04E+0001 | 2.08E+0001 | 2.10E+0001 | 2.12E+0001 | 2.13E+0001 | 2.14E+0001 |
| 20 | 2.04E+0001 | 2.06E+0001 | 2.08E+0001 | 2.09E+0001 | 2.11E+0001 | 2.12E+0001 |
| 19 | 2.04E+0001 | 2.04E+0001 | 2.06E+0001 | 2.07E+0001 | 2.09E+0001 | 2.10E+0001 |
| 18 | 2.08E+0001 | 2.04E+0001 | 2.05E+0001 | 2.06E+0001 | 2.07E+0001 | 2.08E+0001 |
| 17 | 2.09E+0001 | 2.04E+0001 | 2.04E+0001 | 2.05E+0001 | 2.06E+0001 | 2.08E+0001 |
| 16 | 2.10E+0001 | 2.07E+0001 | 2.04E+0001 | 2.05E+0001 | 2.07E+0001 | 2.09E+0001 |
| 15 | 2.10E+0001 | 2.07E+0001 | 2.04E+0001 | 2.04E+0001 | 2.06E+0001 | 2.08E+0001 |
| 14 | 2.10E+0001 | 2.07E+0001 | 2.04E+0001 | 2.04E+0001 | 2.06E+0001 | 2.08E+0001 |
| 13 | 2.09E+0001 | 2.06E+0001 | 2.04E+0001 | 2.05E+0001 | 2.06E+0001 | 2.08E+0001 |
| 12 | 2.07E+0001 | 2.04E+0001 | 2.04E+0001 | 2.05E+0001 | 2.07E+0001 | 2.09E+0001 |
| 11 | 2.06E+0001 | 2.04E+0001 | 2.05E+0001 | 2.06E+0001 | 2.08E+0001 | 2.09E+0001 |
| 10 | 2.04E+0001 | 2.04E+0001 | 2.06E+0001 | 2.07E+0001 | 2.09E+0001 | 2.10E+0001 |
| 9 | 2.04E+0001 | 2.05E+0001 | 2.07E+0001 | 2.08E+0001 | 2.10E+0001 | 2.11E+0001 |
| 8 | 2.04E+0001 | 2.07E+0001 | 2.09E+0001 | 2.10E+0001 | 2.11E+0001 | 2.13E+0001 |
| 7 | 2.07E+0001 | 2.10E+0001 | 2.11E+0001 | 2.12E+0001 | 2.13E+0001 | 2.14E+0001 |
| 6 | 2.14E+0001 | 2.14E+0001 | 2.14E+0001 | 2.15E+0001 | 2.15E+0001 | 2.16E+0001 |
| 5 | 2.18E+0001 | 2.18E+0001 | 2.17E+0001 | 2.17E+0001 | 2.17E+0001 | 2.18E+0001 |
| 4 | 2.23E+0001 | 2.22E+0001 | 2.22E+0001 | 2.22E+0001 | 2.22E+0001 | 2.22E+0001 |
| 3 | 2.26E+0001 | 2.25E+0001 | 2.25E+0001 | 2.25E+0001 | 2.25E+0001 | 2.25E+0001 |
| 2 | 2.28E+0001 | 2.27E+0001 | 2.27E+0001 | 2.27E+0001 | 2.27E+0001 | 2.27E+0001 |
| 1 | 2.28E+0001 | 2.28E+0001 | 2.28E+0001 | 2.27E+0001 | 2.27E+0001 | 2.27E+0001 |
| | 7 | 8 | 9 | 10 | 11 | 12 |
| | 13 | 14 | 15 | 16 | 17 | 18 |
| 27 | 2.28E+0001 | 2.28E+0001 | 2.29E+0001 | 2.30E+0001 | 2.32E+0001 | 2.35E+0001 |
| 26 | 2.27E+0001 | 2.27E+0001 | 2.28E+0001 | 2.30E+0001 | 2.31E+0001 | 2.33E+0001 |
| 25 | 2.26E+0001 | 2.26E+0001 | 2.27E+0001 | 2.29E+0001 | 2.31E+0001 | 2.32E+0001 |
| 24 | 2.24E+0001 | 2.24E+0001 | 2.26E+0001 | 2.28E+0001 | 2.30E+0001 | 2.32E+0001 |
| 23 | 2.21E+0001 | 2.22E+0001 | 2.24E+0001 | 2.27E+0001 | 2.29E+0001 | 2.31E+0001 |
| 22 | 2.19E+0001 | 2.20E+0001 | 2.24E+0001 | 2.27E+0001 | 2.29E+0001 | 2.31E+0001 |
| 21 | 2.17E+0001 | 2.19E+0001 | 2.23E+0001 | 2.27E+0001 | 2.29E+0001 | 2.31E+0001 |
| 20 | 2.15E+0001 | 2.17E+0001 | 2.22E+0001 | 2.26E+0001 | 2.29E+0001 | 2.31E+0001 |
| 19 | 2.13E+0001 | 2.16E+0001 | 2.21E+0001 | 2.26E+0001 | 2.29E+0001 | 2.30E+0001 |
| 18 | 2.12E+0001 | 2.15E+0001 | 2.21E+0001 | 2.25E+0001 | 2.28E+0001 | 2.30E+0001 |
| 17 | 2.12E+0001 | 2.15E+0001 | 2.20E+0001 | 2.25E+0001 | 2.27E+0001 | 2.30E+0001 |
| 16 | 2.12E+0001 | 2.14E+0001 | 2.19E+0001 | 2.24E+0001 | 2.27E+0001 | 2.29E+0001 |
| 15 | 2.11E+0001 | 2.14E+0001 | 2.19E+0001 | 2.23E+0001 | 2.26E+0001 | 2.29E+0001 |
| 14 | 2.11E+0001 | 2.14E+0001 | 2.18E+0001 | 2.23E+0001 | 2.26E+0001 | 2.29E+0001 |
| 13 | 2.11E+0001 | 2.14E+0001 | 2.18E+0001 | 2.22E+0001 | 2.26E+0001 | 2.29E+0001 |
| 12 | 2.11E+0001 | 2.14E+0001 | 2.18E+0001 | 2.22E+0001 | 2.26E+0001 | 2.29E+0001 |
| 11 | 2.12E+0001 | 2.14E+0001 | 2.19E+0001 | 2.22E+0001 | 2.26E+0001 | 2.28E+0001 |
| 10 | 2.13E+0001 | 2.15E+0001 | 2.19E+0001 | 2.22E+0001 | 2.26E+0001 | 2.29E+0001 |
| 9 | 2.13E+0001 | 2.16E+0001 | 2.19E+0001 | 2.22E+0001 | 2.26E+0001 | 2.29E+0001 |
| 8 | 2.15E+0001 | 2.16E+0001 | 2.20E+0001 | 2.23E+0001 | 2.26E+0001 | 2.30E+0001 |
| 7 | 2.16E+0001 | 2.17E+0001 | 2.20E+0001 | 2.24E+0001 | 2.27E+0001 | 2.31E+0001 |
| 6 | 2.17E+0001 | 2.18E+0001 | 2.21E+0001 | 2.25E+0001 | 2.28E+0001 | 2.31E+0001 |
| 5 | 2.19E+0001 | 2.20E+0001 | 2.23E+0001 | 2.26E+0001 | 2.29E+0001 | 2.32E+0001 |
| 4 | 2.22E+0001 | 2.23E+0001 | 2.25E+0001 | 2.28E+0001 | 2.31E+0001 | 2.34E+0001 |
| 3 | 2.25E+0001 | 2.26E+0001 | 2.28E+0001 | 2.30E+0001 | 2.33E+0001 | 2.36E+0001 |
| 2 | 2.27E+0001 | 2.28E+0001 | 2.29E+0001 | 2.32E+0001 | 2.36E+0001 | 2.38E+0001 |
| 1 | 2.28E+0001 | 2.28E+0001 | 2.30E+0001 | 2.34E+0001 | 2.40E+0001 | 2.41E+0001 |
| | 13 | 14 | 15 | 16 | 17 | 18 |
| | 19 | 20 | 21 | 22 | | |

| | | | | |
|---|---|---|---|---|
| 27 | 2.35E+0001 | 2.36E+0001 | 2.36E+0001 | 2.37E+0001 |
| 26 | 2.34E+0001 | 2.35E+0001 | 2.36E+0001 | 2.37E+0001 |
| 25 | 2.34E+0001 | 2.35E+0001 | 2.36E+0001 | 2.36E+0001 |
| 24 | 2.33E+0001 | 2.35E+0001 | 2.36E+0001 | 2.36E+0001 |
| 23 | 2.33E+0001 | 2.34E+0001 | 2.36E+0001 | 2.38E+0001 |
| 22 | 2.33E+0001 | 2.34E+0001 | 2.36E+0001 | 2.37E+0001 |
| 21 | 2.33E+0001 | 2.34E+0001 | 2.36E+0001 | 2.37E+0001 |
| 20 | 2.32E+0001 | 2.34E+0001 | 2.36E+0001 | 2.38E+0001 |
| 19 | 2.32E+0001 | 2.34E+0001 | 2.36E+0001 | 2.39E+0001 |
| 18 | 2.32E+0001 | 2.34E+0001 | 2.36E+0001 | 2.38E+0001 |
| 17 | 2.32E+0001 | 2.34E+0001 | 2.36E+0001 | 2.37E+0001 |
| 16 | 2.32E+0001 | 2.34E+0001 | 2.36E+0001 | 2.37E+0001 |
| 15 | 2.31E+0001 | 2.34E+0001 | 2.36E+0001 | 2.38E+0001 |
| 14 | 2.31E+0001 | 2.34E+0001 | 2.36E+0001 | 2.40E+0001 |
| 13 | 2.31E+0001 | 2.34E+0001 | 2.36E+0001 | 2.39E+0001 |
| 12 | 2.31E+0001 | 2.34E+0001 | 2.37E+0001 | 2.39E+0001 |
| 11 | 2.31E+0001 | 2.34E+0001 | 2.37E+0001 | 2.41E+0001 |
| 10 | 2.32E+0001 | 2.35E+0001 | 2.37E+0001 | 2.40E+0001 |
| 9 | 2.32E+0001 | 2.35E+0001 | 2.38E+0001 | 2.40E+0001 |
| 8 | 2.33E+0001 | 2.36E+0001 | 2.38E+0001 | 2.40E+0001 |
| 7 | 2.34E+0001 | 2.36E+0001 | 2.39E+0001 | 2.42E+0001 |
| 6 | 2.34E+0001 | 2.37E+0001 | 2.39E+0001 | 2.41E+0001 |
| 5 | 2.35E+0001 | 2.37E+0001 | 2.39E+0001 | 2.41E+0001 |
| 4 | 2.36E+0001 | 2.39E+0001 | 2.41E+0001 | 2.43E+0001 |
| 3 | 2.38E+0001 | 2.40E+0001 | 2.42E+0001 | 2.43E+0001 |
| 2 | 2.40E+0001 | 2.41E+0001 | 2.43E+0001 | 2.44E+0001 |
| 1 | 2.42E+0001 | 2.43E+0001 | 2.44E+0001 | 2.44E+0001 |
| | 19 | 20 | 21 | 22 |

********** End of logbook **********

NCBC GULFPORT SITE 6

FLOWPATH ITERATIONS

FILENAME: TRY 62

~~Baseline~~ — KS

~~No Pumping~~

~~No Trend~~

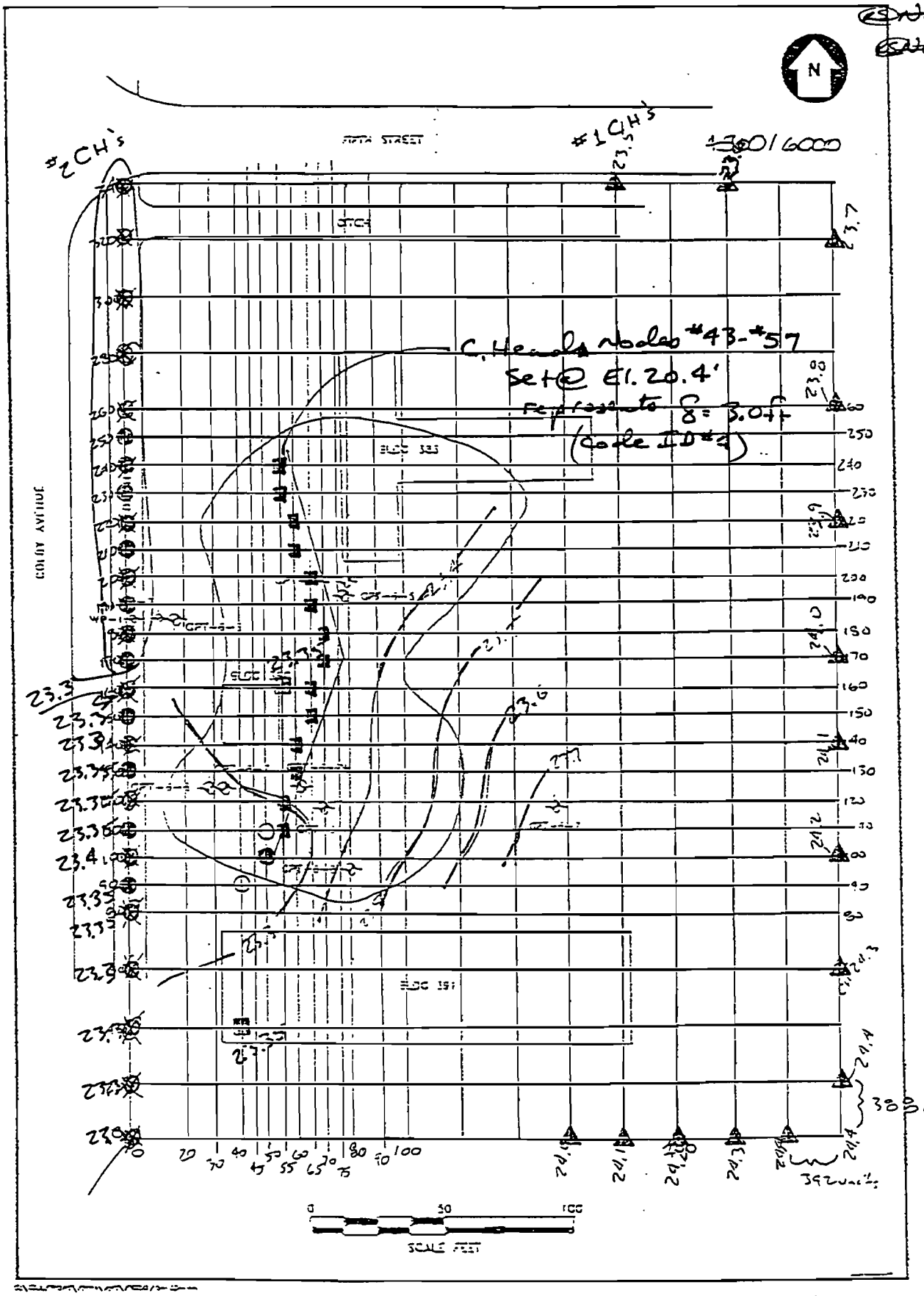


-600/-600

E-31

CONSTANT HEADS

Downgradient #2

13/17 element rows/cols

grid rows/cols

NCBC GULFPORT SITE 6

FLOWPATH ITERATIONS

FILENAME: TR4 62

~~Baseline~~ → (K5)

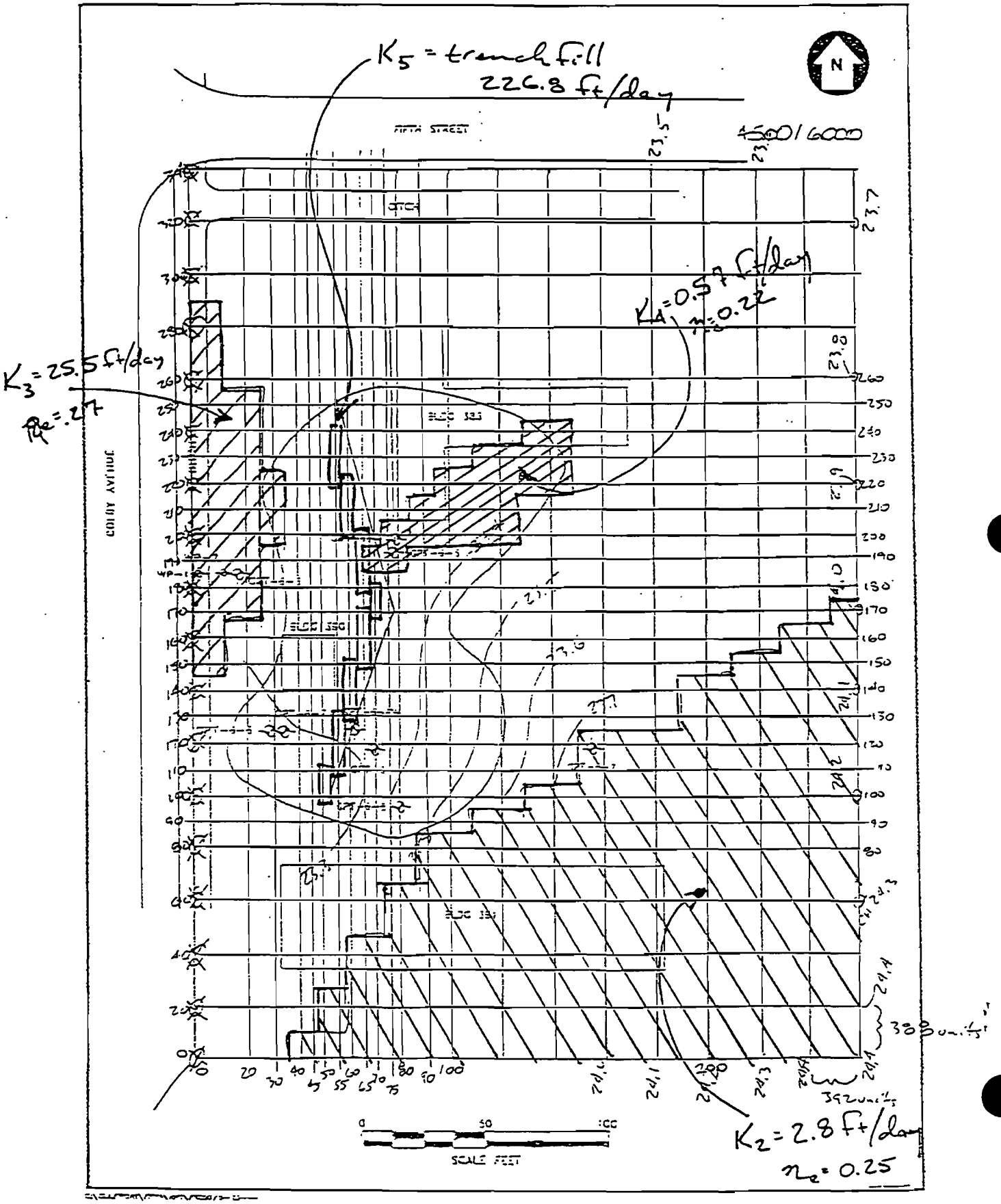


-600/-600

E-32

Hydraulic Conductivity

13/17 element rows/cols
12/16 grid rows/cols

NCBC GULFPORT SITE 6

FLOWPATH ITERATIONS

FILENAME: TRY 62

~~Baseline~~ (65)

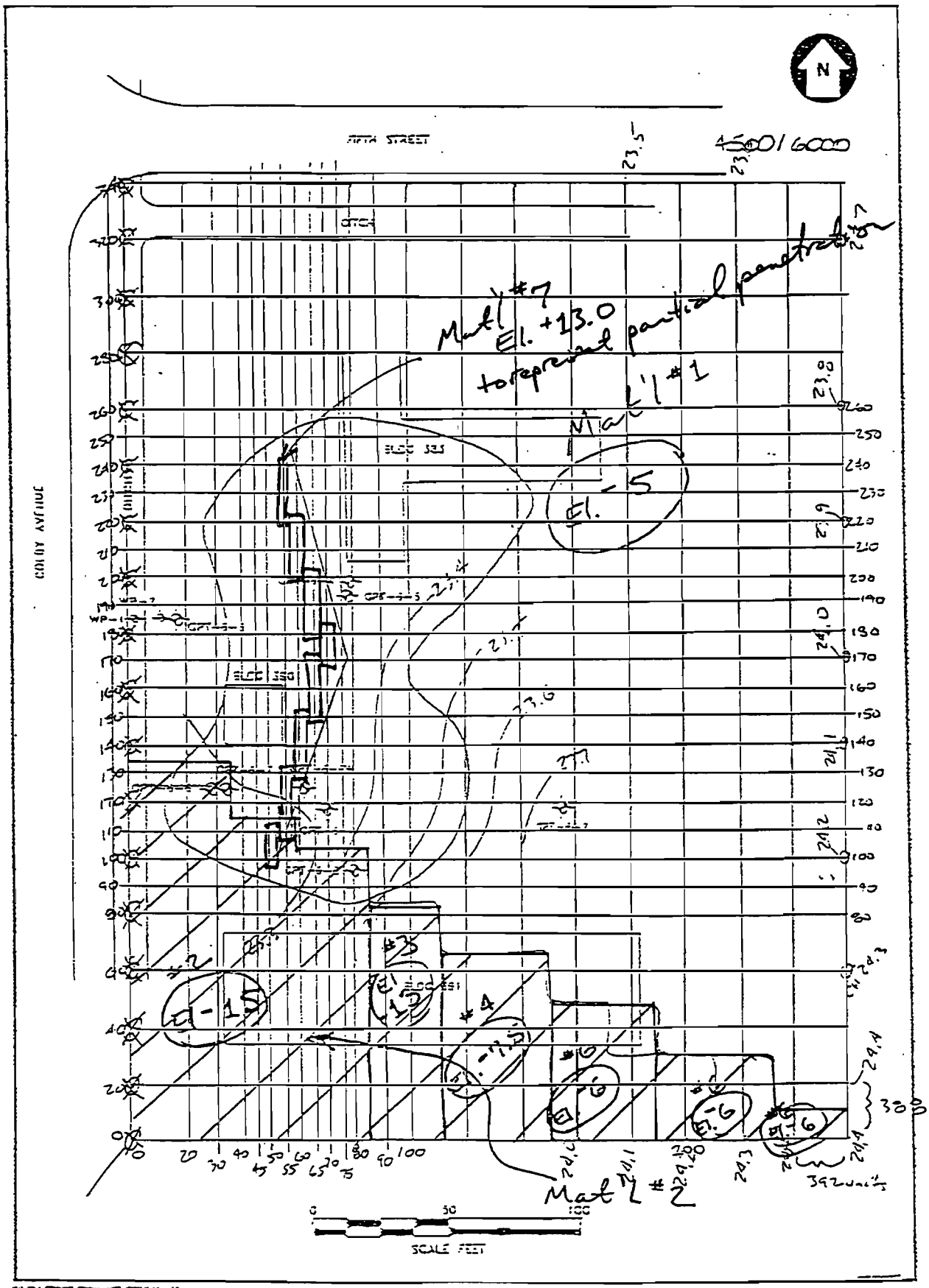


-600/-600

E-33

AQUIFER BOTTOM

13/17 element rows/cols

14/18 grid rows/cols

NCBC GULFPORT SITE 6

FLOWPATH ITERATIONS

FILENAME: TRY 62

Baseline

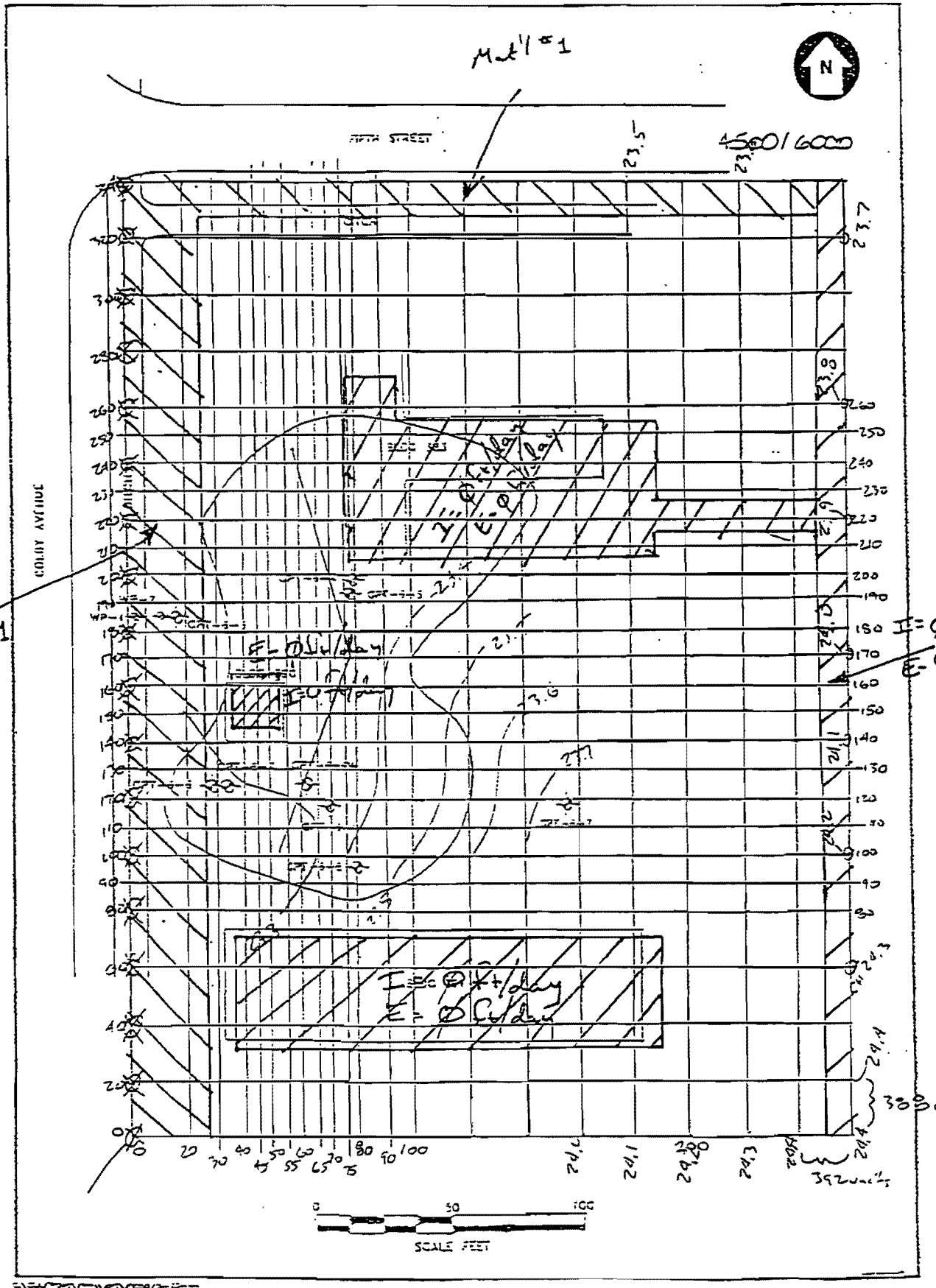


-600 / -600



RECHARGE Mat'l #3 (areal) 13/17 element rows/col
5.10 12/13 grid rows/colu

# NCBC Gulfport Site 6

FLOWPATH Modeling Task

Water Balance Results from Interceptor Trench, Constant Head

Maintained at 3-ft of Drawdown (El. 20.4 ft), partially penetrating trench..

Flow is equivalent to flux sum for Code ID#4. *07/23/94 kds/rf*

**Units of all fluxes in [ft^3/d]**

| i | j | flux | CodeID | Node# | |
|---|---|---|---|---|---|
| 1 | 27 | 15.3368 | 1 | 1 | constant head |
| 1 | 26 | 32.7018 | 1 | 2 | constant head |
| 1 | 25 | 38.0711 | 1 | 3 | constant head |
| 1 | 24 | 62.1295 | 1 | 4 | constant head |
| 1 | 23 | 55.8438 | 1 | 5 | constant head |
| 1 | 22 | 108.7362 | 1 | 6 | constant head |
| 1 | 21 | 110.8002 | 1 | 7 | constant head |
| 1 | 20 | 121.6157 | 1 | 8 | constant head |
| 1 | 19 | 139.8336 | 1 | 9 | constant head |
| 1 | 18 | 141.2051 | 1 | 10 | constant head |
| 1 | 17 | 140.8615 | 1 | 11 | constant head |
| 1 | 16 | 127.5445 | 1 | 12 | constant head |
| 1 | 15 | 125.9462 | 1 | 13 | constant head |
| 1 | 14 | 138.3568 | 1 | 14 | constant head |
| 1 | 13 | 60.1606 | 1 | 15 | constant head |
| 1 | 12 | 75.1617 | 1 | 16 | constant head |
| 1 | 11 | 60.2192 | 1 | 17 | constant head |
| 1 | 10 | 90.4924 | 1 | 18 | constant head |
| 1 | 9 | 95.1192 | 1 | 19 | constant head |
| 1 | 8 | 93.9297 | 1 | 20 | constant head |
| 1 | 7 | 87.2601 | 1 | 21 | constant head |
| 1 | 6 | 80.0835 | 1 | 22 | constant head |
| 1 | 5 | 103.9313 | 1 | 23 | constant head |
| 1 | 4 | 96.9006 | 1 | 24 | constant head |
| 1 | 3 | 68.8550 | 1 | 25 | constant head |
| 1 | 2 | 51.8739 | 1 | 26 | constant head |
| 1 | 1 | 22.6260 | 1 | 27 | constant head |
| 20 | 27 | 17.8877 | 3 | 28 | constant head |
| 18 | 27 | 51.7258 | 3 | 29 | constant head |
| 17 | 1 | 55.0536 | 3 | 30 | constant head |
| 18 | 1 | 22.7221 | 3 | 31 | constant head |
| 19 | 1 | 16.8142 | 3 | 32 | constant head |
| 20 | 1 | 13.0201 | 3 | 33 | constant head |
| 21 | 1 | 14.5552 | 3 | 34 | constant head |
| 22 | 2 | 16.2799 | 3 | 35 | constant head |
| 22 | 4 | 29.4961 | 3 | 36 | constant head |
| 22 | 7 | 35.8008 | 3 | 37 | constant head |
| 22 | 11 | 39.1667 | 3 | 38 | constant head |
| 22 | 14 | 56.5693 | 3 | 39 | constant head |
| 22 | 19 | 69.7783 | 3 | 40 | constant head |
| 22 | 23 | 50.6610 | 3 | 41 | constant head |
| 22 | 26 | 24.8975 | 3 | 42 | constant head |
| 7 | 21 | -388.3304 | 4 | 43 | constant head |
| 7 | 20 | -261.5443 | 4 | 44 | constant head |
| 8 | 19 | -231.9059 | 4 | 45 | constant head |
| 8 | 18 | -177.5122 | 4 | 46 | constant head |
| 9 | 17 | -145.6174 | 4 | 47 | constant head |
| 9 | 16 | -96.2739 | 4 | 48 | constant head |
| 10 | 15 | -120.6613 | 4 | 49 | constant head |
| 10 | 14 | -129.2180 | 4 | 50 | constant head |
| 9 | 13 | -120.0770 | 4 | 51 | constant head |
| 9 | 12 | -146.3503 | 4 | 52 | constant head |
| 8 | 11 | -131.0838 | 4 | 53 | constant head |
| 8 | 10 | -161.1946 | 4 | 54 | constant head |
| 7 | 9 | -158.7249 | 4 | 55 | constant head |
| 7 | 8 | -263.7971 | 4 | 56 | constant head |
| 6 | 7 | -464.5751 | 4 | 57 | constant head |
| 4 | 3 | 0.0000 | 2 | 1 | flux node |
| 7 | 13 | 0.0000 | 2 | 2 | flux node |

**Sum of all fluxes organized in Codes : 4**

| | | | |
|---|---|---|---|
| 1 | 2345.5962 | CodeID | Total flux |
| 2 | 0.0000 | CodeID | Total flux |
| 3 | 514.4284 | CodeID | Total flux |
| 4 | -2996.8657 | CodeID | Total flux |

**Global water balance [ft^3/d] :**

| | |
|---|---|
| 2860.0245 | total IN-flux through const. head nodes |
| -2996.8660 | total OUT-flux through const. head nodes |
| 0.0000 | total IN-flux through flux nodes |
| 0.0000 | total OUT-flux through flux nodes |
| 0.0000 | total IN-flux through river nodes |
| 0.0000 | total OUT-flux through river nodes |
| 0.0000 | total IN-flux through injection wells |
| 0.0000 | total OUT-flux through pumping wells |
| 136.5033 | total net aquifer recharge |
| -0.3382 | sum of all fluxes should be zero |
| -0.0056% | total mass balance error |

# Simulation Domain and Boundary Conditions

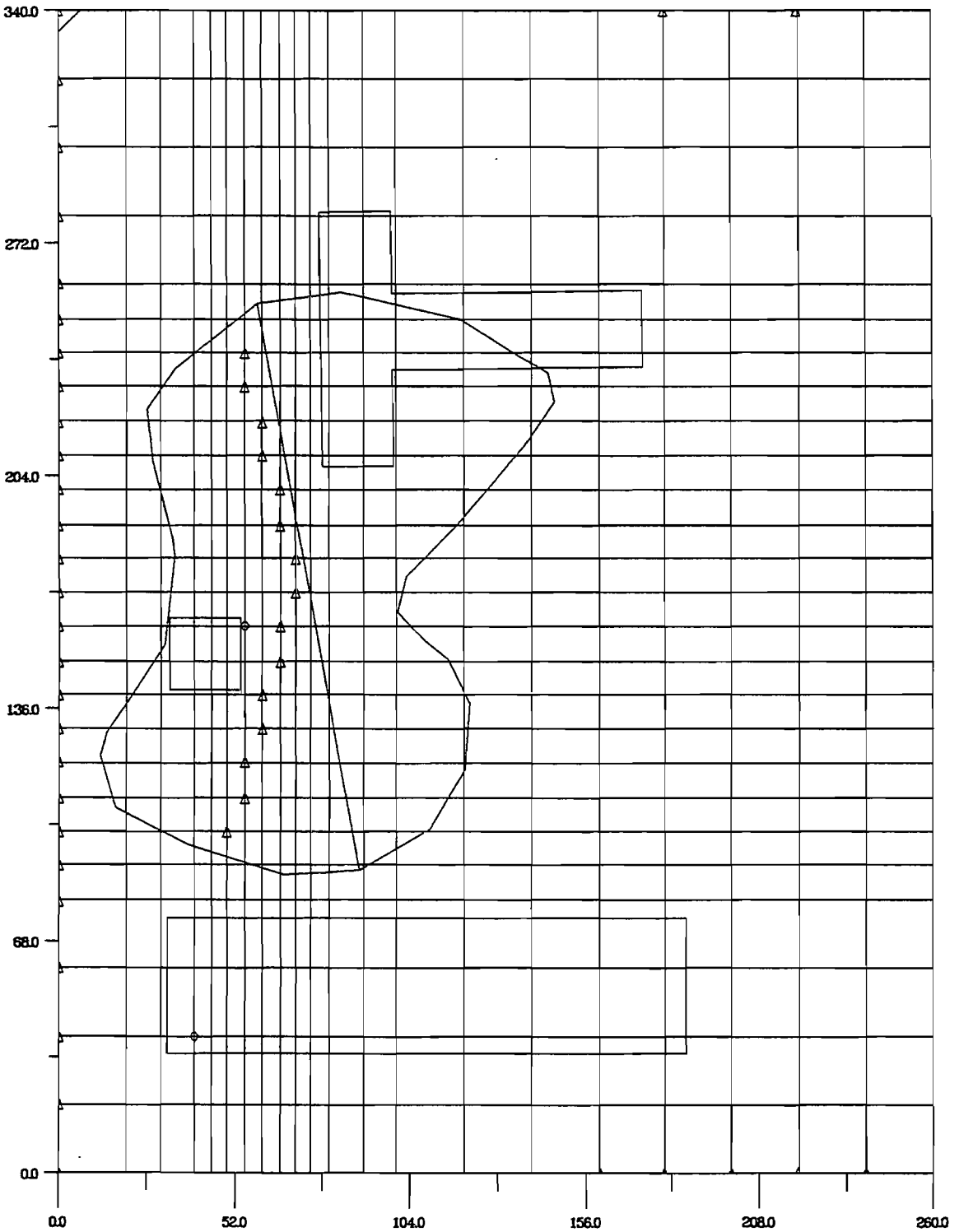


FLOWPA

Copyri

1989-1

by WHS

# Row

27

# Col

22

# Wel

0

Units

[ft]

File

TR62

Per_Spe.GLP
mlv.11.94

Hydraulic Head Distribution

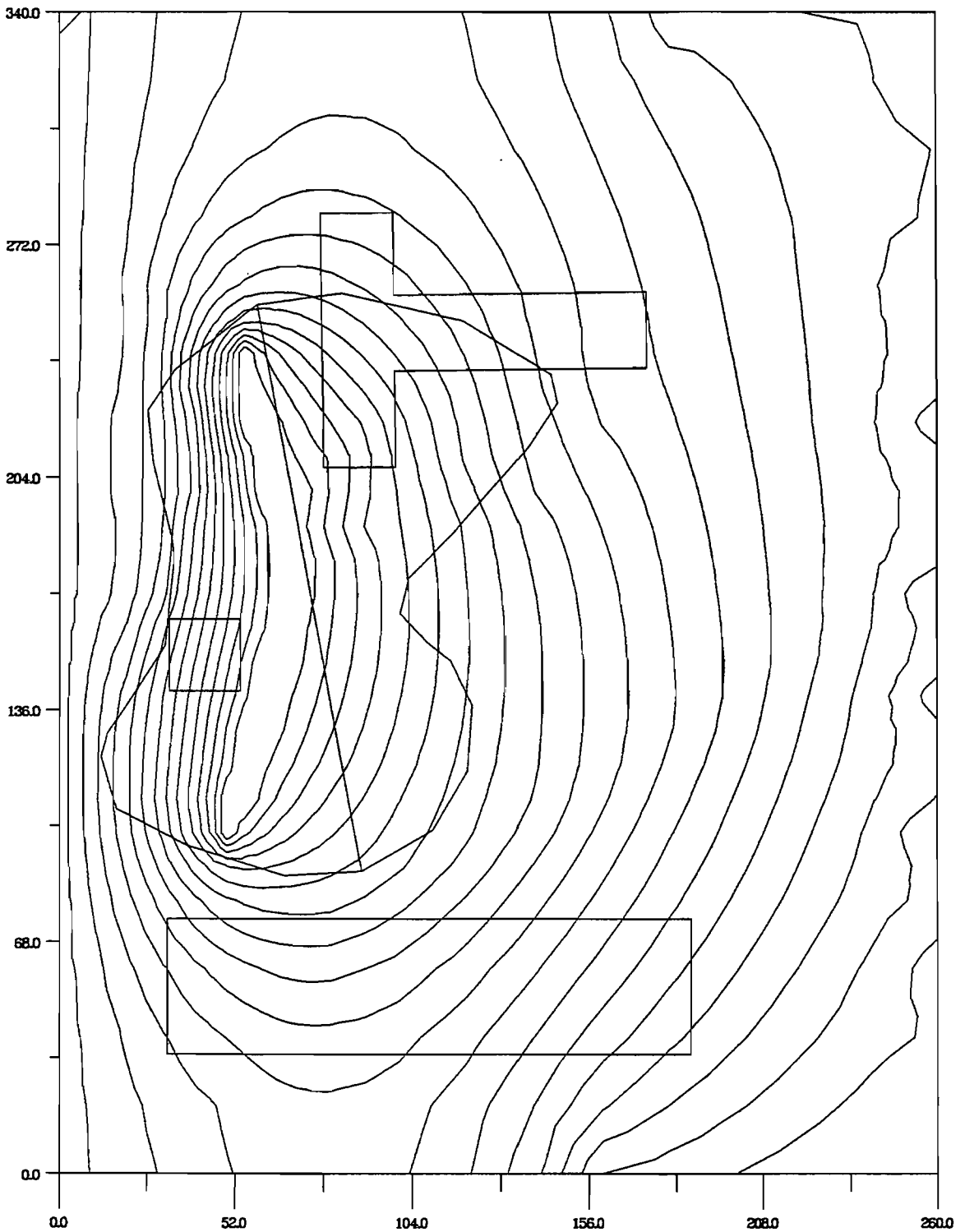


FLOWPA

Copyri

1989-1

by WHS

Stead

State

Flow

Min :

2.0E+

Max :

2.4E+

Inc :

2.0E-

Units

[ft]

File

TR62

Per_Spe.GLP
mlv.11.94

# Velocity Distribution

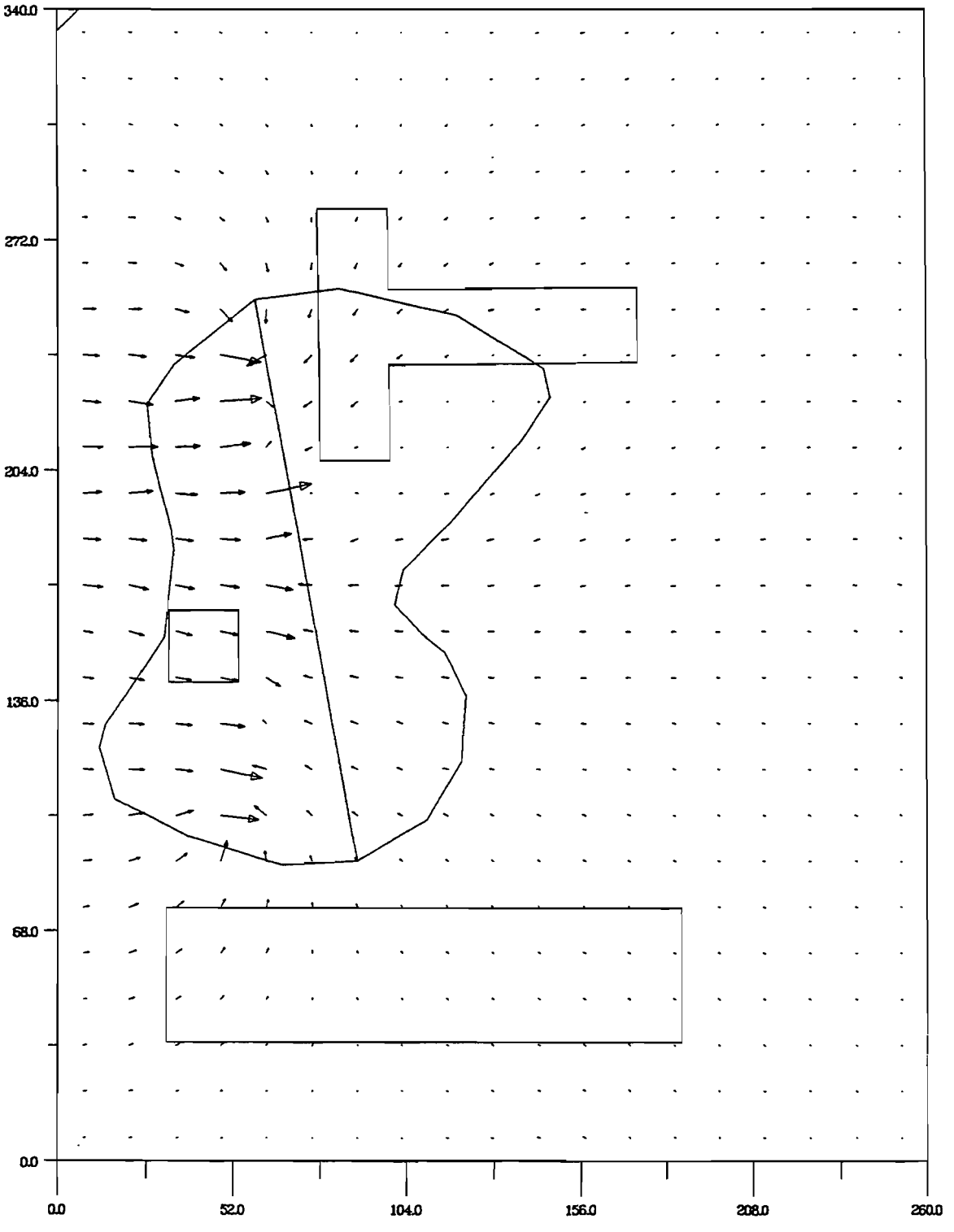


FLOWPA

Copyri

1989-1

by WHS

# Wel

0

Vmin

2.4E-

Vmax

3.5E+

Vavg

4.2E-

Angle

3.6E+

Units

[ft]

File

TR62

Per_Spe.GLP
mlv.11.94

# Pathlines

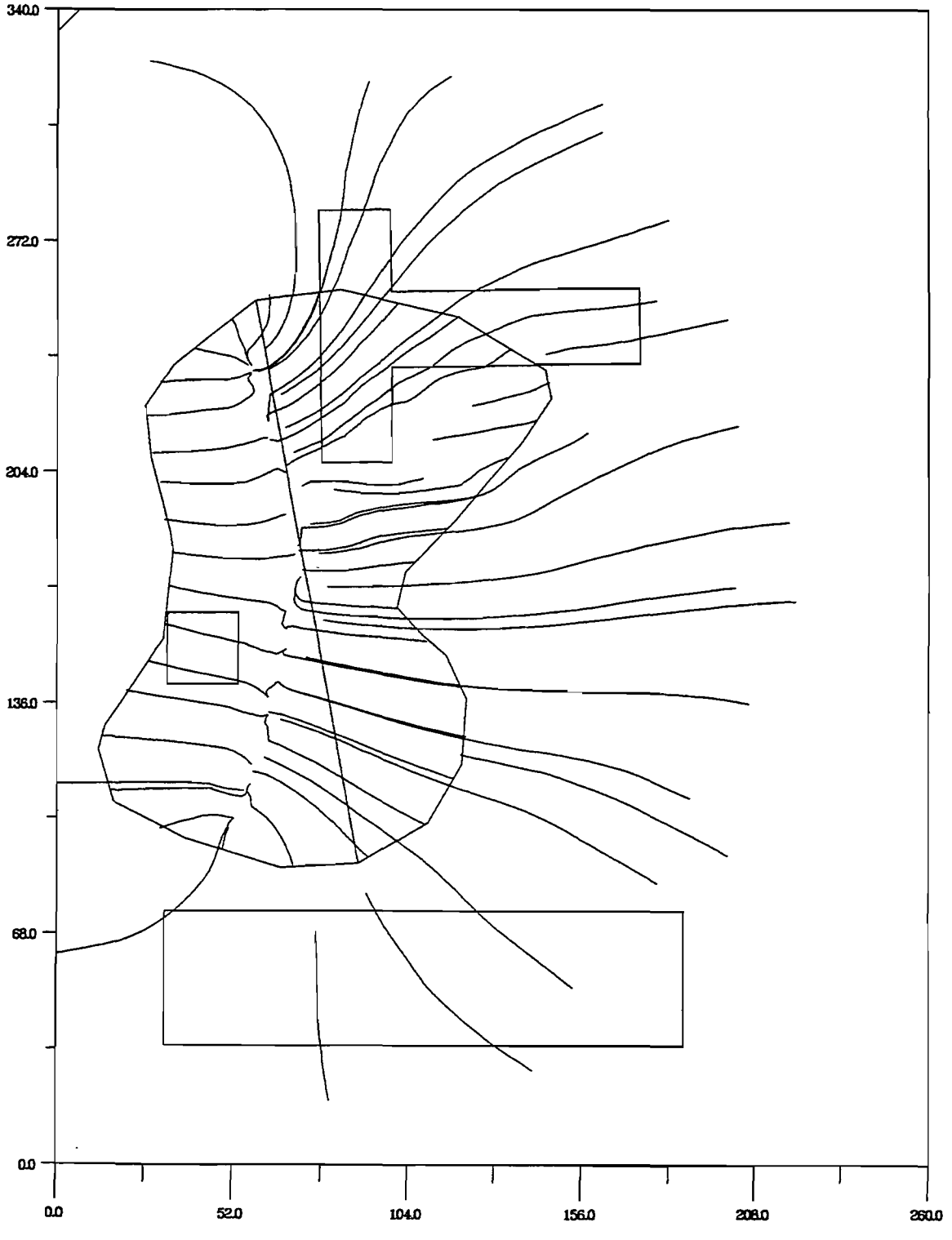


FLOWPATH

Copyright

1989-1992

by WHS

Steady

State

Flow

Time :

3.7E+0002 d

Retard :

1.0E+0000

Units :

ft/d

File :

TR52

Per_Spe.GLP
mlv.11.94

# Pathlines

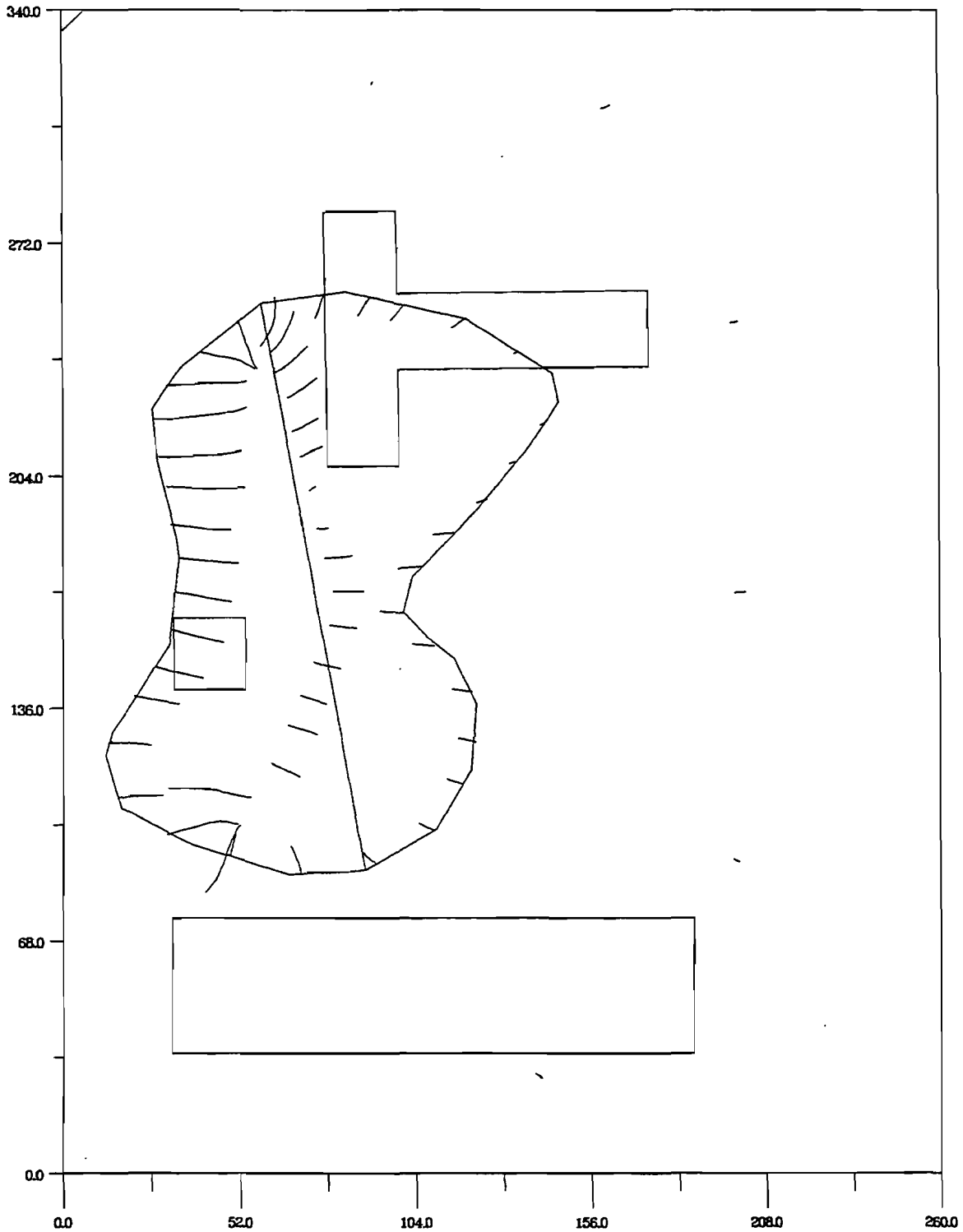


FLOWPATH

Copyright

1989-1992

by WHS

Steady

State

Flow

Time :

3.7E+0002 d

Retard :

3.1E+0001

Units :

ft/d

File :

TR62R

Per_Spe.GLP
mlv.11.94

# Pathlines

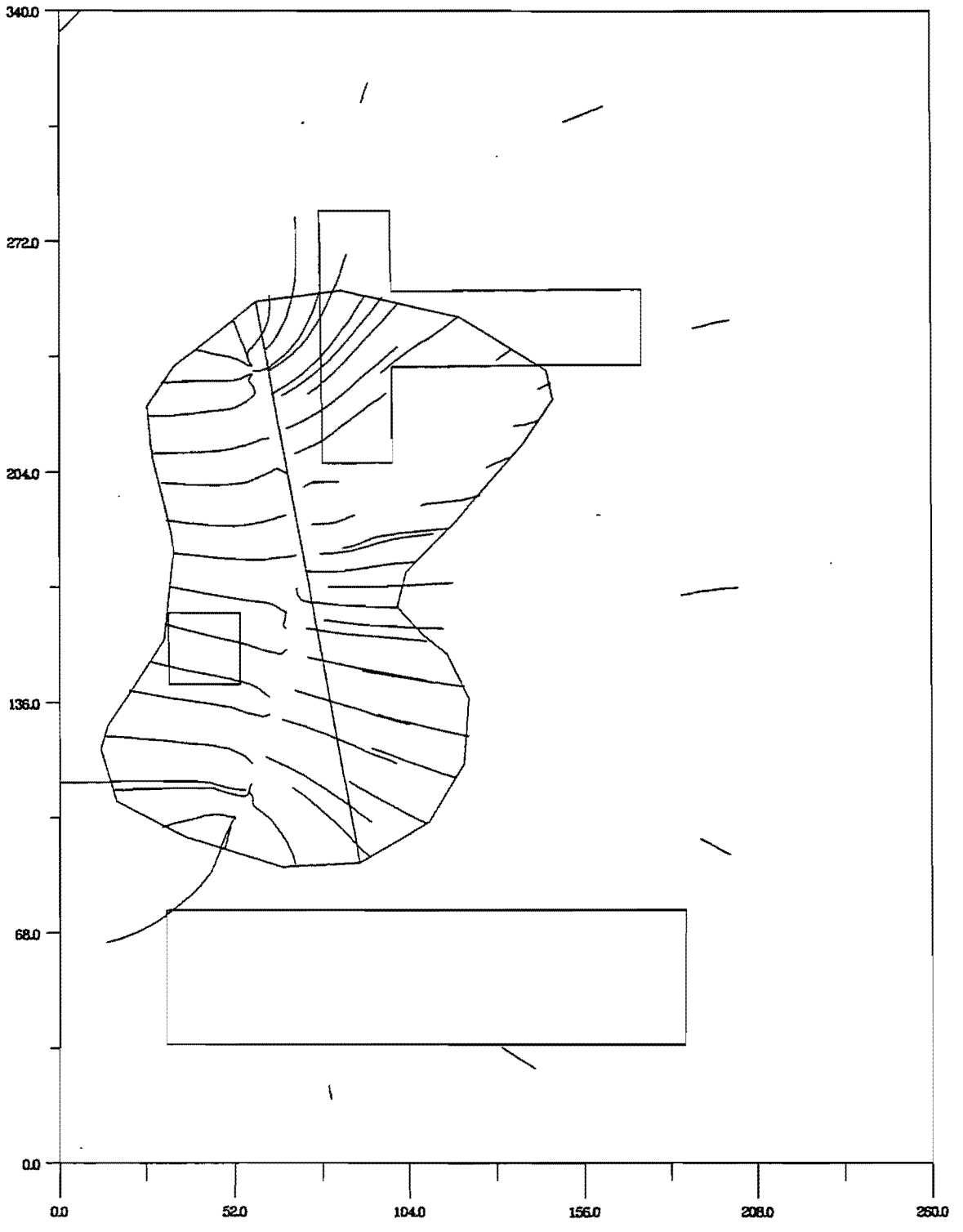


FLOWPATH

Copyright

1989-1992

by WHS

Steady

State

Flow

Time :

1.8E+0003 d

Retard :

3.1E+0001

Units :

ft

File :

TR62R

Par_Spe.GLP
mlv.11.94

# Pathlines

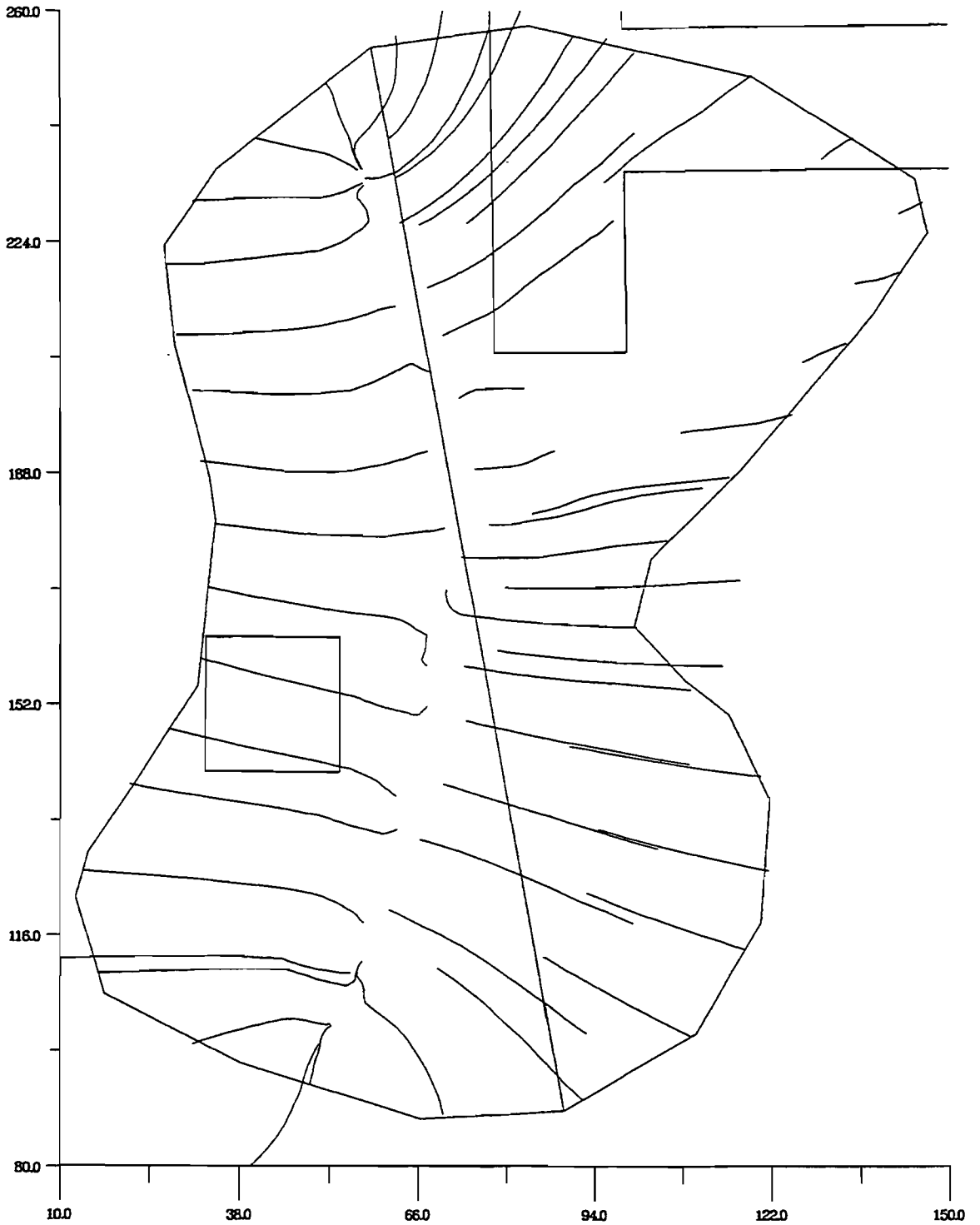


FLOWPATH

Copyright

1989-1992

by WHS

Steady

State

Flow

Time :

1.8E+0003 d

Retard :

3.1E+0001

Units :

ft/d

File :

TR62R

Per_Spe.GLP
mlv.11.94

# Pathlines

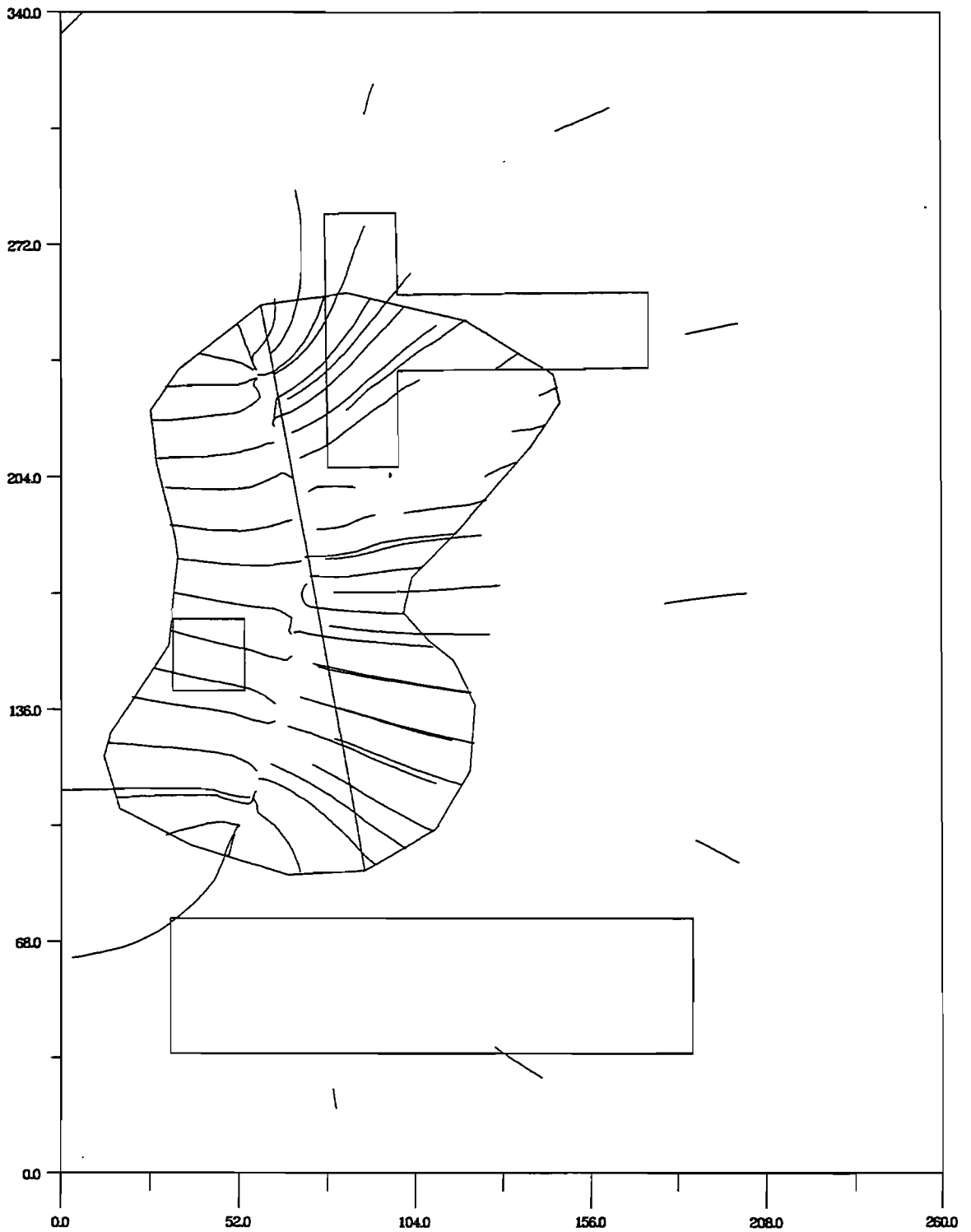


FLOWPATH

Copyright

1989–1992

by WHS

Steady

State

Flow

Time :

2.6E+0003 d

Retard :

3.1E+0001

Units :

[ft]

File :

TR52R

Per_Spe.GLP
mlv.11.94

# Pathlines

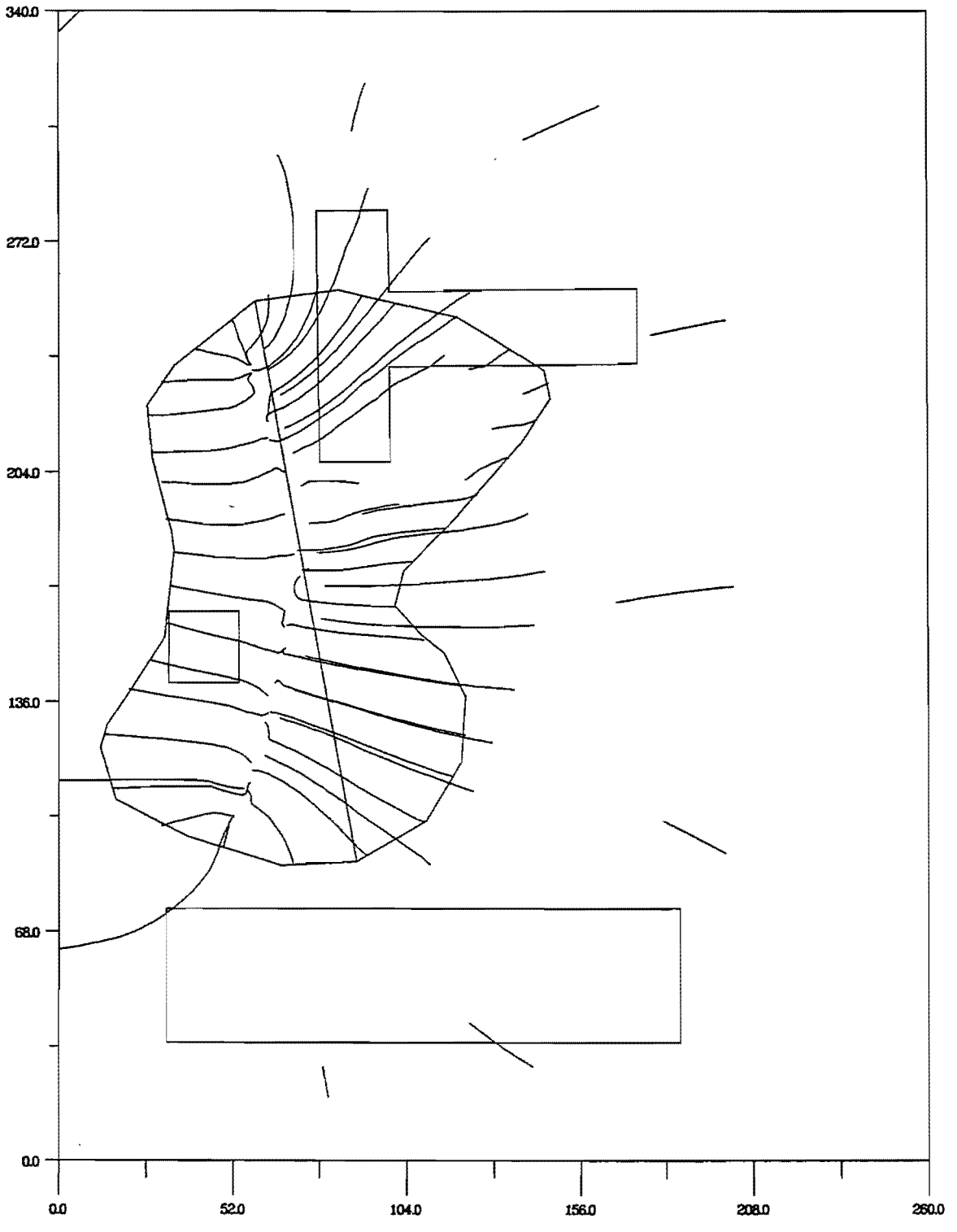


FLOWPATH

Copyright

1989–1992

by WHS

Steady

State

Flow

Time :

3.7E+0003 d

Retard :

3.1E+0001

Units :

ft/d

File :

TR62R

Per_Spe.GLP
mlv.11.94

THIS PAGE INTENTIONALLY LEFT BLANK.

# Water Balance Results from Twelve Ints Trench, Pumping Levels

# NCBC Gulfport Site 6

FLOWPATH MODELING TASK
WATER BALANCE RESULTS FROM TWELVE INTS TRENCH, PUMPING LEVELS
HEAD MAINTAINED AT APPROXIMATELY 3-FT OF DRAWDOWN (EL. 20.4 +/- FT),
PARTIALLY PENETRATING WELL POINTS. *07/23/94 KDS/RF*

```
*************************************************************
*          E C H O P R I N T                 *
*                                   *
*          F L O W P A T H                   *
*           version 4.3                *
*                                   *
* FLOWPATH was written by Thomas Franz and Nilson Guiguer *
*                                   *
*************************************************************
*                                   *
*          Copyright 1989-1993              *
*               by                  *
*       Waterloo Hydrogeologic Software          *
*          200 Candlewood Crescent           *
*           Waterloo, Ontario             *
*            N2L 5Y9, Canada             *
*                                   *
*           ph (519) 746-1798               *
*                                   *
*************************************************************
```

FLOWPATH logbook for data set : TR65R

Unit System : English units [ft/gal/d]

***** GRID PARAMETERS *****

Number of x-grid lines : 22

Number of y-grid lines : 27

Grid coordinates (x-grid lines) [ft] :

| | |
|---|---|
| 1 | 0.000E+0000 |
| 2 | 2.000E+0001 |
| 3 | 3.009E+0001 |
| 4 | 4.000E+0001 |
| 5 | 4.513E+0001 |
| 6 | 4.965E+0001 |
| 7 | 5.491E+0001 |
| 8 | 6.000E+0001 |
| 9 | 6.544E+0001 |
| 10 | 6.996E+0001 |
| 11 | 7.447E+0001 |
| 12 | 8.000E+0001 |
| 13 | 9.027E+0001 |
| 14 | 1.000E+0002 |
| 15 | 1.200E+0002 |
| 16 | 1.400E+0002 |
| 17 | 1.600E+0002 |
| 18 | 1.800E+0002 |
| 19 | 2.000E+0002 |
| 20 | 2.200E+0002 |
| 21 | 2.400E+0002 |
| 22 | 2.600E+0002 |

Grid coordinates (y-grid lines) [ft] :

| | |
|---|---|
| 1 | 0.000E+0000 |
| 2 | 2.000E+0001 |
| 3 | 4.000E+0001 |
| 4 | 6.000E+0001 |
| 5 | 8.000E+0001 |
| 6 | 9.027E+0001 |
| 7 | 1.000E+0002 |
| 8 | 1.098E+0002 |
| 9 | 1.200E+0002 |
| 10 | 1.301E+0002 |
| 11 | 1.400E+0002 |
| 12 | 1.497E+0002 |
| 13 | 1.600E+0002 |
| 14 | 1.700E+0002 |
| 15 | 1.800E+0002 |
| 16 | 1.896E+0002 |
| 17 | 2.000E+0002 |
| 18 | 2.099E+0002 |
| 19 | 2.200E+0002 |
| 20 | 2.302E+0002 |
| 21 | 2.400E+0002 |
| 22 | 2.497E+0002 |
| 23 | 2.600E+0002 |
| 24 | 2.800E+0002 |
| 25 | 3.000E+0002 |
| 26 | 3.200E+0002 |
| 27 | 3.400E+0002 |

***** WELL PARAMETERS *****

Number of wells : 12

| No. | i | j | X [ft] | Y [ft] | well discharge [gpd] |
|---|---|---|---|---|---|
| 1 | 8 | 21 | 6.000E+0001 | 2.399E+0002 | -1.800E+0003 |
| 2 | 6 | 18 | 4.982E+0001 | 2.098E+0002 | -1.800E+0003 |
| 3 | 9 | 16 | 6.531E+0001 | 1.895E+0002 | -2.500E+0002 |
| 4 | 7 | 14 | 5.469E+0001 | 1.700E+0002 | -1.800E+0003 |
| 5 | 11 | 13 | 7.447E+0001 | 1.602E+0002 | -1.800E+0003 |
| 6 | 9 | 11 | 6.531E+0001 | 1.399E+0002 | -1.800E+0003 |
| 7 | 4 | 9 | 4.009E+0001 | 1.200E+0002 | -1.800E+0003 |
| 8 | 12 | 9 | 7.991E+0001 | 1.200E+0002 | -1.800E+0003 |
| 9 | 9 | 7 | 6.531E+0001 | 1.001E+0002 | -1.800E+0003 |
| 10 | 14 | 17 | 9.982E+0001 | 2.001E+0002 | -2.500E+0002 |
| 11 | 14 | 20 | 1.001E+0002 | 2.301E+0002 | -7.200E+0002 |
| 12 | 15 | 18 | 1.202E+0002 | 2.098E+0002 | -2.500E+0002 |

***** CONSTRAINED HEAD NODES *****

Number of constant head nodes : 42

| No. | i | j | X [ft] | Y [ft] | const. head [ft] |
|---|---|---|---|---|---|
| 1 | 1 | 27 | 0.000E+0000 | 3.400E+0002 | 2.330E+0001 |
| 2 | 1 | 26 | 0.000E+0000 | 3.197E+0002 | 2.330E+0001 |
| 3 | 1 | 25 | 0.000E+0000 | 3.001E+0002 | 2.330E+0001 |
| 4 | 1 | 24 | 0.000E+0000 | 2.798E+0002 | 2.330E+0001 |
| 5 | 1 | 23 | 0.000E+0000 | 2.603E+0002 | 2.330E+0001 |
| 6 | 1 | 22 | 0.000E+0000 | 2.497E+0002 | 2.330E+0001 |
| 7 | 1 | 21 | 0.000E+0000 | 2.400E+0002 | 2.330E+0001 |
| 8 | 1 | 20 | 0.000E+0000 | 2.302E+0002 | 2.330E+0001 |

| | | | | | |
|---|---|---|---|---|---|
| 9 | 1 | 19 | 0.000E+0000 | 2.196E+0002 | 2.330E+0001 |
| 10 | 1 | 18 | 0.000E+0000 | 2.099E+0002 | 2.330E+0001 |
| 11 | 1 | 17 | 0.000E+0000 | 2.001E+0002 | 2.330E+0001 |
| 12 | 1 | 16 | 0.000E+0000 | 1.896E+0002 | 2.330E+0001 |
| 13 | 1 | 15 | 0.000E+0000 | 1.798E+0002 | 2.330E+0001 |
| 14 | 1 | 14 | 0.000E+0000 | 1.700E+0002 | 2.330E+0001 |
| 15 | 1 | 13 | 0.000E+0000 | 1.602E+0002 | 2.330E+0001 |
| 16 | 1 | 12 | 0.000E+0000 | 1.497E+0002 | 2.330E+0001 |
| 17 | 1 | 11 | 0.000E+0000 | 1.399E+0002 | 2.330E+0001 |
| 18 | 1 | 10 | 0.000E+0000 | 1.301E+0002 | 2.330E+0001 |
| 19 | 1 | 9 | 0.000E+0000 | 1.204E+0002 | 2.330E+0001 |
| 20 | 1 | 8 | 0.000E+0000 | 1.098E+0002 | 2.330E+0001 |
| 21 | 1 | 7 | 0.000E+0000 | 1.000E+0002 | 2.330E+0001 |
| 22 | 1 | 6 | 0.000E+0000 | 9.027E+0001 | 2.330E+0001 |
| 23 | 1 | 5 | 0.000E+0000 | 7.973E+0001 | 2.330E+0001 |
| 24 | 1 | 4 | 0.000E+0000 | 6.018E+0001 | 2.330E+0001 |
| 25 | 1 | 3 | 0.000E+0000 | 3.987E+0001 | 2.330E+0001 |
| 26 | 1 | 2 | 0.000E+0000 | 2.031E+0001 | 2.330E+0001 |
| 27 | 1 | 1 | 0.000E+0000 | 0.000E+0000 | 2.330E+0001 |
| 28 | 20 | 27 | 2.196E+0002 | 3.400E+0002 | 2.360E+0001 |
| 29 | 18 | 27 | 1.798E+0002 | 3.400E+0002 | 2.350E+0001 |
| 30 | 17 | 1 | 1.602E+0002 | 0.000E+0000 | 2.400E+0001 |
| 31 | 18 | 1 | 1.798E+0002 | 0.000E+0000 | 2.410E+0001 |
| 32 | 19 | 1 | 2.001E+0002 | 0.000E+0000 | 2.420E+0001 |
| 33 | 20 | 1 | 2.196E+0002 | 0.000E+0000 | 2.430E+0001 |
| 34 | 21 | 1 | 2.400E+0002 | 0.000E+0000 | 2.440E+0001 |
| 35 | 22 | 2 | 2.603E+0002 | 2.031E+0001 | 2.440E+0001 |
| 36 | 22 | 4 | 2.603E+0002 | 6.018E+0001 | 2.430E+0001 |
| 37 | 22 | 7 | 2.603E+0002 | 1.000E+0002 | 2.420E+0001 |
| 38 | 22 | 11 | 2.603E+0002 | 1.399E+0002 | 2.410E+0001 |
| 39 | 22 | 14 | 2.603E+0002 | 1.700E+0002 | 2.400E+0001 |
| 40 | 22 | 19 | 2.603E+0002 | 2.196E+0002 | 2.390E+0001 |
| 41 | 22 | 23 | 2.603E+0002 | 2.603E+0002 | 2.380E+0001 |
| 42 | 22 | 26 | 2.603E+0002 | 3.197E+0002 | 2.370E+0001 |

***** SPECIFIED FLUX NODES *****

Number of flux nodes : 2

| No. | i | j | X [ft] | Y [ft] | nodal flow [ft^3/ft^2/d] |
|---|---|---|---|---|---|
| 1 | 7 | 13 | 5.491E+0001 | 1.602E+0002 | -6.161E-0001 |
| 2 | 4 | 3 | 3.987E+0001 | 3.987E+0001 | -1.849E-0001 |

***** SURFACE WATER BODIES *****

Number of surface water body nodes : 0

***** AQUIFER PROPERTIES *****

Number of different material properties : 4

| No. | Kxx [ft/d] | Kyy [ft/d] | Porosity [-] | |
|---|---|---|---|---|
| 1 | 5.700E+0000 | 5.700E+0000 | 2.500E-0001 | (default) |
| 2 | 2.550E+0001 | 2.550E+0001 | 2.700E-0001 | |
| 3 | 5.700E-0001 | 5.700E-0001 | 2.200E-0001 | |
| 4 | 2.800E+0000 | 2.800E+0000 | 2.500E-0001 | |

********** DISTRIBUTION OF AQUIFER MATERIAL PROPERTIES **********

| | 1 | 2 | 3 | 4 | 5 | 6 | 7 | 8 | 9 | 10 | 11 | 12 | 13 | 14 | 15 | 16 | 17 |
|---|---|---|---|---|---|---|---|---|---|---|---|---|---|---|---|---|---|
| 27 | 1 | 1 | 1 | 1 | 1 | 1 | 1 | 1 | 1 | 1 | 1 | 1 | 1 | 1 | 1 | 1 | 1 |
| 26 | 1 | 1 | 1 | 1 | 1 | 1 | 1 | 1 | 1 | 1 | 1 | 1 | 1 | 1 | 1 | 1 | 1 |
| 25 | 1 | 1 | 1 | 1 | 1 | 1 | 1 | 1 | 1 | 1 | 1 | 1 | 1 | 1 | 1 | 1 | 1 |
| 24 | 2 | 1 | 1 | 1 | 1 | 1 | 1 | 1 | 1 | 1 | 1 | 1 | 1 | 1 | 1 | 1 | 1 |
| 23 | 2 | 1 | 1 | 1 | 1 | 1 | 1 | 1 | 1 | 1 | 1 | 1 | 1 | 1 | 1 | 1 | 1 |
| 22 | 2 | 2 | 1 | 1 | 1 | 1 | 1 | 1 | 1 | 1 | 1 | 1 | 1 | 1 | 1 | 1 | 1 |
| 21 | 2 | 2 | 1 | 1 | 1 | 1 | 1 | 1 | 1 | 1 | 1 | 1 | 1 | 1 | 1 | 3 | 1 |
| 20 | 2 | 2 | 1 | 1 | 1 | 1 | 1 | 1 | 1 | 1 | 1 | 1 | 1 | 1 | 3 | 3 | 1 |
| 19 | 2 | 2 | 2 | 1 | 1 | 1 | 1 | 1 | 1 | 1 | 1 | 1 | 1 | 3 | 3 | 3 | 1 |
| 18 | 2 | 2 | 2 | 1 | 1 | 1 | 1 | 1 | 1 | 1 | 1 | 1 | 3 | 3 | 3 | 1 | 1 |
| 17 | 2 | 2 | 2 | 1 | 1 | 1 | 1 | 1 | 1 | 1 | 3 | 3 | 3 | 3 | 3 | 1 | 1 |
| 16 | 2 | 2 | 1 | 1 | 1 | 1 | 1 | 1 | 3 | 3 | 3 | 3 | 1 | 1 | 1 | 1 | 1 |
| 15 | 2 | 2 | 1 | 1 | 1 | 1 | 1 | 1 | 1 | 1 | 1 | 1 | 1 | 1 | 1 | 1 | 1 |
| 14 | 2 | 2 | 1 | 1 | 1 | 1 | 1 | 1 | 1 | 1 | 1 | 1 | 1 | 1 | 1 | 1 | 1 |
| 13 | 2 | 1 | 1 | 1 | 1 | 1 | 1 | 1 | 1 | 1 | 1 | 1 | 1 | 1 | 1 | 1 | 1 |
| 12 | 2 | 1 | 1 | 1 | 1 | 1 | 1 | 1 | 1 | 1 | 1 | 1 | 1 | 1 | 1 | 1 | 1 |
| 11 | 1 | 1 | 1 | 1 | 1 | 1 | 1 | 1 | 1 | 1 | 1 | 1 | 1 | 1 | 1 | 1 | 1 |
| 10 | 1 | 1 | 1 | 1 | 1 | 1 | 1 | 1 | 1 | 1 | 1 | 1 | 1 | 1 | 1 | 1 | 1 |
| 9 | 1 | 1 | 1 | 1 | 1 | 1 | 1 | 1 | 1 | 1 | 1 | 1 | 1 | 1 | 1 | 1 | 4 |
| 8 | 1 | 1 | 1 | 1 | 1 | 1 | 1 | 1 | 1 | 1 | 1 | 1 | 1 | 1 | 1 | 1 | 4 |
| 7 | 1 | 1 | 1 | 1 | 1 | 1 | 1 | 1 | 1 | 1 | 1 | 1 | 1 | 1 | 1 | 4 | 4 |
| 6 | 1 | 1 | 1 | 1 | 1 | 1 | 1 | 1 | 1 | 1 | 1 | 1 | 1 | 1 | 4 | 4 | 4 |
| 5 | 1 | 1 | 1 | 1 | 1 | 1 | 1 | 1 | 1 | 1 | 1 | 1 | 4 | 4 | 4 | 4 | 4 |
| 4 | 1 | 1 | 1 | 1 | 1 | 1 | 1 | 1 | 1 | 1 | 4 | 4 | 4 | 4 | 4 | 4 | 4 |
| 3 | 1 | 1 | 1 | 1 | 1 | 1 | 1 | 1 | 4 | 4 | 4 | 4 | 4 | 4 | 4 | 4 | 4 |
| 2 | 1 | 1 | 1 | 1 | 1 | 1 | 4 | 4 | 4 | 4 | 4 | 4 | 4 | 4 | 4 | 4 | 4 |
| 1 | 1 | 1 | 1 | 1 | 4 | 4 | 4 | 4 | 4 | 4 | 4 | 4 | 4 | 4 | 4 | 4 | 4 |
| | 1 | 2 | 3 | 4 | 5 | 6 | 7 | 8 | 9 | 10 | 11 | 12 | 13 | 14 | 15 | 16 | 17 |

| | 18 | 19 | 20 | 21 | 22 |
|---|---|---|---|---|---|
| 27 | 1 | 1 | 1 | 1 | 1 |
| 26 | 1 | 1 | 1 | 1 | 1 |
| 25 | 1 | 1 | 1 | 1 | 1 |
| 24 | 1 | 1 | 1 | 1 | 1 |
| 23 | 1 | 1 | 1 | 1 | 1 |
| 22 | 1 | 1 | 1 | 1 | 1 |
| 21 | 1 | 1 | 1 | 1 | 1 |
| 20 | 1 | 1 | 1 | 1 | 1 |
| 19 | 1 | 1 | 1 | 1 | 1 |
| 18 | 1 | 1 | 1 | 1 | 1 |
| 17 | 1 | 1 | 1 | 1 | 1 |
| 16 | 1 | 1 | 1 | 1 | 1 |
| 15 | 1 | 1 | 1 | 1 | 1 |
| 14 | 1 | 1 | 1 | 1 | 4 |
| 13 | 1 | 1 | 1 | 4 | 4 |
| 12 | 1 | 1 | 4 | 4 | 4 |
| 11 | 1 | 4 | 4 | 4 | 4 |
| 10 | 1 | 4 | 4 | 4 | 4 |
| 9 | 4 | 4 | 4 | 4 | 4 |
| 8 | 4 | 4 | 4 | 4 | 4 |
| 7 | 4 | 4 | 4 | 4 | 4 |
| 6 | 4 | 4 | 4 | 4 | 4 |
| 5 | 4 | 4 | 4 | 4 | 4 |
| 4 | 4 | 4 | 4 | 4 | 4 |
| 3 | 4 | 4 | 4 | 4 | 4 |
| 2 | 4 | 4 | 4 | 4 | 4 |
| 1 | 4 | 4 | 4 | 4 | 4 |
| | 18 | 19 | 20 | 21 | 22 |

***** AQUIFER TYPE *****

Unconfined aquifer

***** AQUIFER BOTTOM ELEVATIONS *****

Number of different aquifer bottom elevations : 6

| No. | aquifer bottom elevation [ft] |
|---|---|
| 1 | -5.000E+0000 (default) |
| 2 | -1.500E+0001 |
| 3 | -1.300E+0001 |
| 4 | -7.500E+0000 |
| 5 | -6.000E+0000 |
| 6 | 1.300E+0001 |

********** DISTRIBUTION OF AQUIFER BOTTOM ELEVATIONS **********

| | 1 | 2 | 3 | 4 | 5 | 6 | 7 | 8 | 9 | 10 | 11 | 12 | 13 | 14 | 15 | 16 | 17 |
|---|---|---|---|---|---|---|---|---|---|---|---|---|---|---|---|---|---|
| 27 | 1 | 1 | 1 | 1 | 1 | 1 | 1 | 1 | 1 | 1 | 1 | 1 | 1 | 1 | 1 | 1 | |
| 26 | 1 | 1 | 1 | 1 | 1 | 1 | 1 | 1 | 1 | 1 | 1 | 1 | 1 | 1 | 1 | 1 | |
| 25 | 1 | 1 | 1 | 1 | 1 | 1 | 1 | 1 | 1 | 1 | 1 | 1 | 1 | 1 | 1 | 1 | |
| 24 | 1 | 1 | 1 | 1 | 1 | 1 | 1 | 1 | 1 | 1 | 1 | 1 | 1 | 1 | 1 | 1 | |
| 23 | 1 | 1 | 1 | 1 | 1 | 1 | 1 | 1 | 1 | 1 | 1 | 1 | 1 | 1 | 1 | 1 | |
| 22 | 1 | 1 | 1 | 1 | 1 | 1 | 1 | 1 | 1 | 1 | 1 | 1 | 1 | 1 | 1 | 1 | |
| 21 | 1 | 1 | 1 | 1 | 1 | 1 | 1 | 6 | 1 | 1 | 1 | 1 | 1 | 1 | 1 | 1 | |
| 20 | 1 | 1 | 1 | 1 | 1 | 1 | 1 | 1 | 1 | 1 | 1 | 1 | 1 | 6 | 1 | 1 | |
| 19 | 1 | 1 | 1 | 1 | 1 | 1 | 1 | 1 | 1 | 1 | 1 | 1 | 1 | 1 | 1 | 1 | |
| 18 | 1 | 1 | 1 | 1 | 1 | 6 | 1 | 1 | 1 | 1 | 1 | 1 | 1 | 1 | 6 | 1 | |
| 17 | 1 | 1 | 1 | 1 | 1 | 1 | 1 | 1 | 1 | 1 | 1 | 1 | 1 | 6 | 1 | 1 | |
| 16 | 1 | 1 | 1 | 1 | 1 | 1 | 1 | 1 | 6 | 1 | 1 | 1 | 1 | 1 | 1 | 1 | |
| 15 | 1 | 1 | 1 | 1 | 1 | 1 | 1 | 1 | 1 | 1 | 1 | 1 | 1 | 1 | 1 | 1 | |
| 14 | 1 | 1 | 1 | 1 | 1 | 1 | 6 | 1 | 1 | 1 | 1 | 1 | 1 | 1 | 1 | 1 | |
| 13 | 1 | 1 | 1 | 1 | 1 | 1 | 1 | 1 | 1 | 1 | 6 | 1 | 1 | 1 | 1 | 1 | |
| 12 | 1 | 1 | 1 | 1 | 1 | 1 | 1 | 1 | 1 | 1 | 1 | 1 | 1 | 1 | 1 | 1 | |
| 11 | 1 | 1 | 1 | 1 | 1 | 1 | 1 | 1 | 6 | 1 | 1 | 1 | 1 | 1 | 1 | 1 | |
| 10 | 2 | 2 | 2 | 1 | 1 | 1 | 1 | 1 | 1 | 1 | 1 | 1 | 1 | 1 | 1 | 1 | |
| 9 | 2 | 2 | 2 | 6 | 1 | 1 | 1 | 1 | 1 | 1 | 1 | 6 | 1 | 1 | 1 | 1 | |
| 8 | 2 | 2 | 2 | 2 | 2 | 2 | 2 | 1 | 1 | 1 | 1 | 1 | 1 | 1 | 1 | 1 | |
| 7 | 2 | 2 | 2 | 2 | 2 | 2 | 2 | 2 | 6 | 2 | 2 | 2 | 1 | 1 | 1 | 1 | |
| 6 | 2 | 2 | 2 | 2 | 2 | 2 | 2 | 2 | 2 | 2 | 2 | 2 | 1 | 1 | 1 | 1 | |
| 5 | 2 | 2 | 2 | 2 | 2 | 2 | 2 | 2 | 2 | 2 | 2 | 2 | 3 | 3 | 1 | 1 | |
| 4 | 2 | 2 | 2 | 2 | 2 | 2 | 2 | 2 | 2 | 2 | 2 | 2 | 3 | 3 | 4 | 4 | 1 |
| 3 | 2 | 2 | 2 | 2 | 2 | 2 | 2 | 2 | 2 | 2 | 2 | 2 | 3 | 3 | 4 | 4 | 5 |
| 2 | 2 | 2 | 2 | 2 | 2 | 2 | 2 | 2 | 2 | 2 | 2 | 2 | 3 | 3 | 4 | 4 | 5 |
| 1 | 2 | 2 | 2 | 2 | 2 | 2 | 2 | 2 | 2 | 2 | 2 | 2 | 3 | 3 | 4 | 4 | 5 |

| | 18 | 19 | 20 | 21 | 22 |
|---|---|---|---|---|---|
| 27 | 1 | 1 | 1 | 1 | 1 |
| 26 | 1 | 1 | 1 | 1 | 1 |
| 25 | 1 | 1 | 1 | 1 | 1 |
| 24 | 1 | 1 | 1 | 1 | 1 |
| 23 | 1 | 1 | 1 | 1 | 1 |
| 22 | 1 | 1 | 1 | 1 | 1 |
| 21 | 1 | 1 | 1 | 1 | 1 |
| 20 | 1 | 1 | 1 | 1 | 1 |
| 19 | 1 | 1 | 1 | 1 | 1 |
| 18 | 1 | 1 | 1 | 1 | 1 |
| 17 | 1 | 1 | 1 | 1 | 1 |

| | | | | | |
|---|---|---|---|---|---|
| 16 | 1 | 1 | 1 | 1 | 1 |
| 15 | 1 | 1 | 1 | 1 | 1 |
| 14 | 1 | 1 | 1 | 1 | 1 |
| 13 | 1 | 1 | 1 | 1 | 1 |
| 12 | 1 | 1 | 1 | 1 | 1 |
| 11 | 1 | 1 | 1 | 1 | 1 |
| 10 | 1 | 1 | 1 | 1 | 1 |
| 9 | 1 | 1 | 1 | 1 | 1 |
| 8 | 1 | 1 | 1 | 1 | 1 |
| 7 | 1 | 1 | 1 | 1 | 1 |
| 6 | 1 | 1 | 1 | 1 | 1 |
| 5 | 1 | 1 | 1 | 1 | 1 |
| 4 | 1 | 1 | 1 | 1 | 1 |
| 3 | 5 | 1 | 1 | 1 | 1 |
| 2 | 5 | 5 | 5 | 1 | 1 |
| 1 | 5 | 5 | 5 | 5 | 5 |
| | 18 | 19 | 20 | 21 | 22 |

***** AREAL RECHARGE *****

Number of different infiltration/evapotranspiration rates : 3

| No. | infiltration [L/T] | evapotranspiration [L/T] | effective recharge [L/T] |
|---|---|---|---|
| 1 | 1.100E-0002 | 9.100E-0003 | 1.900E-0003 (default) |
| 1 | 1.256E-0002 | 9.100E-0003 | 3.460E-0003 |
| 1 | 0.000E+0000 | 0.000E+0000 | 0.000E+0000 |

********** DISTRIBUTION OF AREAL IN/OUT-FLUXES **********

| | 1 | 2 | 3 | 4 | 5 | 6 | 7 | 8 | 9 | 10 | 11 | 12 | 13 | 14 | 15 | 16 | 17 |
|---|---|---|---|---|---|---|---|---|---|---|---|---|---|---|---|---|---|
| 27 | 2 | 2 | 2 | 2 | 2 | 2 | 2 | 2 | 2 | 2 | 2 | 2 | 2 | 2 | 2 | 2 | 2 |
| 26 | 2 | 2 | 1 | 1 | 1 | 1 | 1 | 1 | 1 | 1 | 1 | 1 | 1 | 1 | 1 | 1 | 1 |
| 25 | 2 | 2 | 1 | 1 | 1 | 1 | 1 | 1 | 1 | 1 | 1 | 1 | 1 | 1 | 1 | 1 | 1 |
| 24 | 2 | 2 | 1 | 1 | 1 | 1 | 1 | 1 | 1 | 1 | 1 | 1 | 1 | 1 | 1 | 1 | 1 |
| 23 | 2 | 2 | 1 | 1 | 1 | 1 | 1 | 1 | 1 | 1 | 1 | 3 | 3 | 1 | 1 | 1 | 1 |
| 22 | 2 | 2 | 1 | 1 | 1 | 1 | 1 | 1 | 1 | 1 | 1 | 3 | 3 | 3 | 3 | 3 | 3 |
| 21 | 2 | 2 | 1 | 1 | 1 | 1 | 1 | 1 | 1 | 1 | 1 | 3 | 3 | 3 | 3 | 3 | 3 |
| 20 | 2 | 2 | 1 | 1 | 1 | 1 | 1 | 1 | 1 | 1 | 1 | 3 | 3 | 3 | 3 | 3 | 3 |
| 19 | 2 | 2 | 1 | 1 | 1 | 1 | 1 | 1 | 1 | 1 | 1 | 3 | 3 | 3 | 3 | 3 | 3 |
| 18 | 2 | 2 | 1 | 1 | 1 | 1 | 1 | 1 | 1 | 1 | 1 | 3 | 3 | 3 | 3 | 3 | 3 |
| 17 | 2 | 2 | 1 | 1 | 1 | 1 | 1 | 1 | 1 | 1 | 1 | 1 | 1 | 1 | 1 | 1 | 1 |
| 16 | 2 | 2 | 1 | 1 | 1 | 1 | 1 | 1 | 1 | 1 | 1 | 1 | 1 | 1 | 1 | 1 | 1 |
| 15 | 2 | 2 | 1 | 1 | 1 | 1 | 1 | 1 | 1 | 1 | 1 | 1 | 1 | 1 | 1 | 1 | 1 |
| 14 | 2 | 2 | 1 | 1 | 1 | 1 | 1 | 1 | 1 | 1 | 1 | 1 | 1 | 1 | 1 | 1 | 1 |
| 13 | 2 | 2 | 1 | 3 | 3 | 3 | 1 | 1 | 1 | 1 | 1 | 1 | 1 | 1 | 1 | 1 | 1 |
| 12 | 2 | 2 | 1 | 3 | 3 | 3 | 1 | 1 | 1 | 1 | 1 | 1 | 1 | 1 | 1 | 1 | 1 |
| 11 | 2 | 2 | 1 | 1 | 1 | 1 | 1 | 1 | 1 | 1 | 1 | 1 | 1 | 1 | 1 | 1 | 1 |
| 10 | 2 | 2 | 1 | 1 | 1 | 1 | 1 | 1 | 1 | 1 | 1 | 1 | 1 | 1 | 1 | 1 | 1 |
| 9 | 2 | 2 | 1 | 1 | 1 | 1 | 1 | 1 | 1 | 1 | 1 | 1 | 1 | 1 | 1 | 1 | 1 |
| 8 | 2 | 2 | 1 | 1 | 1 | 1 | 1 | 1 | 1 | 1 | 1 | 1 | 1 | 1 | 1 | 1 | 1 |
| 7 | 2 | 2 | 1 | 1 | 1 | 1 | 1 | 1 | 1 | 1 | 1 | 1 | 1 | 1 | 1 | 1 | 1 |
| 6 | 2 | 2 | 1 | 1 | 1 | 1 | 1 | 1 | 1 | 1 | 1 | 1 | 1 | 1 | 1 | 1 | 1 |
| 5 | 2 | 2 | 1 | 1 | 1 | 1 | 1 | 1 | 1 | 1 | 1 | 1 | 1 | 1 | 1 | 1 | 1 |
| 4 | 2 | 2 | 1 | 3 | 3 | 3 | 3 | 3 | 3 | 3 | 3 | 3 | 3 | 3 | 3 | 3 | 3 |
| 3 | 2 | 2 | 1 | 3 | 3 | 3 | 3 | 3 | 3 | 3 | 3 | 3 | 3 | 3 | 3 | 3 | 3 |
| 2 | 2 | 2 | 1 | 1 | 1 | 1 | 1 | 1 | 1 | 1 | 1 | 1 | 1 | 1 | 1 | 1 | 1 |
| 1 | 2 | 2 | 1 | 1 | 1 | 1 | 1 | 1 | 1 | 1 | 1 | 1 | 1 | 1 | 1 | 1 | 1 |
| | 1 | 2 | 3 | 4 | 5 | 6 | 7 | 8 | 9 | 10 | 11 | 12 | 13 | 14 | 15 | 16 | 17 |

| | | | | | |
|---|---|---|---|---|---|
| | 18 | 19 | 20 | 21 | 22 |

| | | | | | |
|---|---|---|---|---|---|
| 27 | 2 | 2 | 2 | 2 | 3 |
| 26 | 1 | 1 | 1 | 1 | 3 |
| 25 | 1 | 1 | 1 | 1 | 3 |
| 24 | 1 | 1 | 1 | 1 | 3 |
| 23 | 1 | 1 | 1 | 1 | 3 |
| 22 | 3 | 1 | 1 | 1 | 3 |
| 21 | 3 | 1 | 1 | 1 | 3 |
| 20 | 3 | 3 | 3 | 3 | 3 |
| 19 | 3 | 1 | 1 | 1 | 3 |
| 18 | 3 | 1 | 1 | 1 | 3 |
| 17 | 1 | 1 | 1 | 1 | 3 |
| 16 | 1 | 1 | 1 | 1 | 3 |
| 15 | 1 | 1 | 1 | 1 | 3 |
| 14 | 1 | 1 | 1 | 1 | 3 |
| 13 | 1 | 1 | 1 | 1 | 3 |
| 12 | 1 | 1 | 1 | 1 | 3 |
| 11 | 1 | 1 | 1 | 1 | 3 |
| 10 | 1 | 1 | 1 | 1 | 3 |
| 9 | 1 | 1 | 1 | 1 | 3 |
| 8 | 1 | 1 | 1 | 1 | 3 |
| 7 | 1 | 1 | 1 | 1 | 3 |
| 6 | 1 | 1 | 1 | 1 | 3 |
| 5 | 1 | 1 | 1 | 1 | 3 |
| 4 | 3 | 1 | 1 | 1 | 3 |
| 3 | 3 | 1 | 1 | 1 | 3 |
| 2 | 1 | 1 | 1 | 1 | 3 |
| 1 | 1 | 1 | 1 | 1 | 3 |
| | 18 | 19 | 20 | 21 | 22 |

***** PATHLINE & PARTICLE TRACKING DATA *****

Number of forward particles : 33

| No. | x-release | y-release |
|---|---|---|
| 1 | 2.204E+0002 | 2.400E+0002 |
| 2 | 2.023E+0002 | 1.790E+0002 |
| 3 | 2.001E+0002 | 1.204E+0002 |
| 4 | 1.617E+0002 | 5.942E+0001 |
| 5 | 1.031E+0002 | 3.460E+0001 |
| 6 | 2.001E+0002 | 2.986E+0002 |
| 7 | 1.414E+0002 | 3.189E+0002 |
| 8 | 9.929E+0001 | 2.542E+0002 |
| 9 | 1.204E+0002 | 2.490E+0002 |
| 10 | 1.383E+0002 | 2.377E+0002 |
| 11 | 1.463E+0002 | 2.262E+0002 |
| 12 | 1.405E+0002 | 2.169E+0002 |
| 13 | 1.233E+0002 | 1.948E+0002 |
| 14 | 1.056E+0002 | 1.775E+0002 |
| 15 | 1.003E+0002 | 1.638E+0002 |
| 16 | 1.140E+0002 | 1.505E+0002 |
| 17 | 1.215E+0002 | 1.337E+0002 |
| 18 | 1.188E+0002 | 1.160E+0002 |
| 19 | 1.100E+0002 | 1.001E+0002 |
| 20 | 9.407E+0001 | 9.124E+0001 |
| 21 | 7.372E+0001 | 8.726E+0001 |
| 22 | 5.159E+0001 | 9.168E+0001 |
| 23 | 3.611E+0001 | 9.832E+0001 |
| 24 | 1.664E+0001 | 1.072E+0002 |
| 25 | 1.398E+0001 | 1.262E+0002 |
| 26 | 2.283E+0001 | 1.408E+0002 |
| 27 | 3.035E+0001 | 1.563E+0002 |
| 28 | 3.389E+0001 | 1.766E+0002 |
| 29 | 3.080E+0001 | 1.983E+0002 |
| 30 | 2.637E+0001 | 2.182E+0002 |

| | | |
|---|---|---|
| 31 | 3.522E+0001 | 2.368E+0002 |
| 32 | 5.425E+0001 | 2.514E+0002 |
| 33 | 7.858E+0001 | 2.563E+0002 |

Number of reverse particles : 0

Particles released at wells :

| Well-No. | Particles released |
|---|---|
| 1 | 50 |
| 2 | 50 |
| 3 | 50 |
| 4 | 50 |
| 5 | 50 |
| 6 | 50 |
| 7 | 50 |
| 8 | 50 |
| 9 | 50 |
| 10 | 50 |
| 11 | 50 |
| 12 | 50 |

********** HYDRAULIC HEAD DISTRIBUTION **********

| | 1 | 2 | 3 | 4 | 5 | 6 |
|---|---|---|---|---|---|---|
| 27 | 2.33E+0001 | 2.32E+0001 | 2.31E+0001 | 2.31E+0001 | 2.31E+0001 | 2.31E+0001 |
| 26 | 2.33E+0001 | 2.32E+0001 | 2.31E+0001 | 2.31E+0001 | 2.31E+0001 | 2.30E+0001 |
| 25 | 2.33E+0001 | 2.32E+0001 | 2.31E+0001 | 2.30E+0001 | 2.30E+0001 | 2.30E+0001 |
| 24 | 2.33E+0001 | 2.32E+0001 | 2.31E+0001 | 2.30E+0001 | 2.29E+0001 | 2.29E+0001 |
| 23 | 2.33E+0001 | 2.31E+0001 | 2.30E+0001 | 2.28E+0001 | 2.28E+0001 | 2.27E+0001 |
| 22 | 2.33E+0001 | 2.31E+0001 | 2.30E+0001 | 2.28E+0001 | 2.26E+0001 | 2.25E+0001 |
| 21 | 2.33E+0001 | 2.31E+0001 | 2.30E+0001 | 2.27E+0001 | 2.25E+0001 | 2.23E+0001 |
| 20 | 2.33E+0001 | 2.31E+0001 | 2.30E+0001 | 2.27E+0001 | 2.25E+0001 | 2.23E+0001 |
| 19 | 2.33E+0001 | 2.31E+0001 | 2.30E+0001 | 2.27E+0001 | 2.24E+0001 | 2.22E+0001 |
| 18 | 2.33E+0001 | 2.31E+0001 | 2.29E+0001 | 2.26E+0001 | 2.22E+0001 | 2.15E+0001 |
| 17 | 2.33E+0001 | 2.31E+0001 | 2.29E+0001 | 2.26E+0001 | 2.23E+0001 | 2.21E+0001 |
| 16 | 2.33E+0001 | 2.31E+0001 | 2.28E+0001 | 2.24E+0001 | 2.22E+0001 | 2.20E+0001 |
| 15 | 2.33E+0001 | 2.30E+0001 | 2.28E+0001 | 2.23E+0001 | 2.20E+0001 | 2.18E+0001 |
| 14 | 2.33E+0001 | 2.30E+0001 | 2.27E+0001 | 2.21E+0001 | 2.18E+0001 | 2.15E+0001 |
| 13 | 2.33E+0001 | 2.29E+0001 | 2.25E+0001 | 2.20E+0001 | 2.18E+0001 | 2.15E+0001 |
| 12 | 2.33E+0001 | 2.28E+0001 | 2.24E+0001 | 2.20E+0001 | 2.17E+0001 | 2.15E+0001 |
| 11 | 2.33E+0001 | 2.27E+0001 | 2.23E+0001 | 2.19E+0001 | 2.17E+0001 | 2.15E+0001 |
| 10 | 2.33E+0001 | 2.27E+0001 | 2.23E+0001 | 2.18E+0001 | 2.16E+0001 | 2.15E+0001 |
| 9 | 2.33E+0001 | 2.27E+0001 | 2.23E+0001 | 2.12E+0001 | 2.15E+0001 | 2.15E+0001 |
| 8 | 2.33E+0001 | 2.27E+0001 | 2.23E+0001 | 2.20E+0001 | 2.18E+0001 | 2.17E+0001 |
| 7 | 2.33E+0001 | 2.27E+0001 | 2.25E+0001 | 2.22E+0001 | 2.20E+0001 | 2.19E+0001 |
| 6 | 2.33E+0001 | 2.28E+0001 | 2.26E+0001 | 2.23E+0001 | 2.22E+0001 | 2.21E+0001 |
| 5 | 2.33E+0001 | 2.29E+0001 | 2.27E+0001 | 2.25E+0001 | 2.24E+0001 | 2.23E+0001 |
| 4 | 2.33E+0001 | 2.30E+0001 | 2.28E+0001 | 2.27E+0001 | 2.26E+0001 | 2.26E+0001 |
| 3 | 2.33E+0001 | 2.31E+0001 | 2.30E+0001 | 2.29E+0001 | 2.28E+0001 | 2.28E+0001 |
| 2 | 2.33E+0001 | 2.31E+0001 | 2.31E+0001 | 2.30E+0001 | 2.30E+0001 | 2.29E+0001 |
| 1 | 2.33E+0001 | 2.31E+0001 | 2.31E+0001 | 2.30E+0001 | 2.30E+0001 | 2.30E+0001 |

| | 1 | 2 | 3 | 4 | 5 | 6 |
|---|---|---|---|---|---|---|
| | 7 | 8 | 9 | 10 | 11 | 12 |
| 27 | 2.30E+0001 | 2.30E+0001 | 2.30E+0001 | 2.30E+0001 | 2.30E+0001 | 2.30E+0001 |
| 26 | 2.30E+0001 | 2.30E+0001 | 2.30E+0001 | 2.30E+0001 | 2.30E+0001 | 2.30E+0001 |
| 25 | 2.30E+0001 | 2.29E+0001 | 2.29E+0001 | 2.29E+0001 | 2.29E+0001 | 2.29E+0001 |
| 24 | 2.28E+0001 | 2.28E+0001 | 2.28E+0001 | 2.28E+0001 | 2.27E+0001 | 2.27E+0001 |
| 23 | 2.26E+0001 | 2.26E+0001 | 2.25E+0001 | 2.25E+0001 | 2.25E+0001 | 2.25E+0001 |
| 22 | 2.24E+0001 | 2.23E+0001 | 2.23E+0001 | 2.23E+0001 | 2.23E+0001 | 2.23E+0001 |

| | | | | | | |
|---|---|---|---|---|---|---|
| 21 | 2.21E+0001 | 2.15E+0001 | 2.19E+0001 | 2.21E+0001 | 2.21E+0001 | 2.22E+0001 |
| 20 | 2.22E+0001 | 2.21E+0001 | 2.20E+0001 | 2.20E+0001 | 2.20E+0001 | 2.20E+0001 |
| 19 | 2.21E+0001 | 2.21E+0001 | 2.20E+0001 | 2.20E+0001 | 2.20E+0001 | 2.20E+0001 |
| 18 | 2.18E+0001 | 2.19E+0001 | 2.19E+0001 | 2.19E+0001 | 2.19E+0001 | 2.19E+0001 |
| 17 | 2.20E+0001 | 2.19E+0001 | 2.19E+0001 | 2.19E+0001 | 2.18E+0001 | 2.17E+0001 |
| 16 | 2.19E+0001 | 2.18E+0001 | 2.11E+0001 | 2.14E+0001 | 2.14E+0001 | 2.15E+0001 |
| 15 | 2.16E+0001 | 2.14E+0001 | 2.13E+0001 | 2.13E+0001 | 2.12E+0001 | 2.13E+0001 |
| 14 | 2.07E+0001 | 2.10E+0001 | 2.10E+0001 | 2.10E+0001 | 2.10E+0001 | 2.11E+0001 |
| 13 | 2.13E+0001 | 2.11E+0001 | 2.09E+0001 | 2.07E+0001 | 2.02E+0001 | 2.09E+0001 |
| 12 | 2.13E+0001 | 2.11E+0001 | 2.09E+0001 | 2.09E+0001 | 2.09E+0001 | 2.10E+0001 |
| 11 | 2.12E+0001 | 2.10E+0001 | 2.02E+0001 | 2.07E+0001 | 2.08E+0001 | 2.10E+0001 |
| 10 | 2.13E+0001 | 2.12E+0001 | 2.10E+0001 | 2.10E+0001 | 2.10E+0001 | 2.10E+0001 |
| 9 | 2.14E+0001 | 2.13E+0001 | 2.12E+0001 | 2.11E+0001 | 2.09E+0001 | 2.04E+0001 |
| 8 | 2.16E+0001 | 2.15E+0001 | 2.13E+0001 | 2.13E+0001 | 2.13E+0001 | 2.13E+0001 |
| 7 | 2.17E+0001 | 2.16E+0001 | 2.10E+0001 | 2.14E+0001 | 2.15E+0001 | 2.15E+0001 |
| 6 | 2.20E+0001 | 2.19E+0001 | 2.18E+0001 | 2.18E+0001 | 2.18E+0001 | 2.18E+0001 |
| 5 | 2.22E+0001 | 2.21E+0001 | 2.21E+0001 | 2.21E+0001 | 2.20E+0001 | 2.20E+0001 |
| 4 | 2.25E+0001 | 2.25E+0001 | 2.25E+0001 | 2.24E+0001 | 2.24E+0001 | 2.24E+0001 |
| 3 | 2.28E+0001 | 2.27E+0001 | 2.27E+0001 | 2.27E+0001 | 2.27E+0001 | 2.27E+0001 |
| 2 | 2.29E+0001 | 2.29E+0001 | 2.28E+0001 | 2.28E+0001 | 2.28E+0001 | 2.28E+0001 |
| 1 | 2.29E+0001 | 2.29E+0001 | 2.29E+0001 | 2.29E+0001 | 2.29E+0001 | 2.29E+0001 |

| | | | | | | |
|---|---|---|---|---|---|---|
| | 7 | 8 | 9 | 10 | 11 | 12 |
| | 13 | 14 | 15 | 16 | 17 | 18 |

| | | | | | | |
|---|---|---|---|---|---|---|
| 27 | 2.30E+0001 | 2.30E+0001 | 2.31E+0001 | 2.32E+0001 | 2.33E+0001 | 2.35E+0001 |
| 26 | 2.30E+0001 | 2.30E+0001 | 2.30E+0001 | 2.31E+0001 | 2.33E+0001 | 2.34E+0001 |
| 25 | 2.29E+0001 | 2.29E+0001 | 2.30E+0001 | 2.31E+0001 | 2.32E+0001 | 2.33E+0001 |
| 24 | 2.27E+0001 | 2.28E+0001 | 2.29E+0001 | 2.30E+0001 | 2.31E+0001 | 2.33E+0001 |
| 23 | 2.25E+0001 | 2.26E+0001 | 2.27E+0001 | 2.29E+0001 | 2.31E+0001 | 2.32E+0001 |
| 22 | 2.24E+0001 | 2.24E+0001 | 2.26E+0001 | 2.29E+0001 | 2.31E+0001 | 2.32E+0001 |
| 21 | 2.22E+0001 | 2.22E+0001 | 2.25E+0001 | 2.28E+0001 | 2.30E+0001 | 2.32E+0001 |
| 20 | 2.20E+0001 | 2.17E+0001 | 2.23E+0001 | 2.27E+0001 | 2.30E+0001 | 2.31E+0001 |
| 19 | 2.20E+0001 | 2.18E+0001 | 2.20E+0001 | 2.26E+0001 | 2.29E+0001 | 2.31E+0001 |
| 18 | 2.18E+0001 | 2.15E+0001 | 2.13E+0001 | 2.26E+0001 | 2.29E+0001 | 2.31E+0001 |
| 17 | 2.16E+0001 | 2.09E+0001 | 2.19E+0001 | 2.25E+0001 | 2.28E+0001 | 2.30E+0001 |
| 16 | 2.15E+0001 | 2.16E+0001 | 2.20E+0001 | 2.24E+0001 | 2.27E+0001 | 2.30E+0001 |
| 15 | 2.14E+0001 | 2.16E+0001 | 2.20E+0001 | 2.24E+0001 | 2.27E+0001 | 2.30E+0001 |
| 14 | 2.13E+0001 | 2.15E+0001 | 2.19E+0001 | 2.23E+0001 | 2.27E+0001 | 2.29E+0001 |
| 13 | 2.12E+0001 | 2.15E+0001 | 2.19E+0001 | 2.23E+0001 | 2.26E+0001 | 2.29E+0001 |
| 12 | 2.12E+0001 | 2.15E+0001 | 2.19E+0001 | 2.23E+0001 | 2.26E+0001 | 2.29E+0001 |
| 11 | 2.13E+0001 | 2.15E+0001 | 2.19E+0001 | 2.23E+0001 | 2.26E+0001 | 2.29E+0001 |
| 10 | 2.13E+0001 | 2.15E+0001 | 2.20E+0001 | 2.23E+0001 | 2.26E+0001 | 2.29E+0001 |
| 9 | 2.13E+0001 | 2.16E+0001 | 2.20E+0001 | 2.23E+0001 | 2.26E+0001 | 2.30E+0001 |
| 8 | 2.15E+0001 | 2.17E+0001 | 2.20E+0001 | 2.24E+0001 | 2.27E+0001 | 2.30E+0001 |
| 7 | 2.17E+0001 | 2.18E+0001 | 2.21E+0001 | 2.24E+0001 | 2.28E+0001 | 2.31E+0001 |
| 6 | 2.18E+0001 | 2.19E+0001 | 2.22E+0001 | 2.26E+0001 | 2.29E+0001 | 2.32E+0001 |
| 5 | 2.21E+0001 | 2.21E+0001 | 2.24E+0001 | 2.27E+0001 | 2.30E+0001 | 2.33E+0001 |
| 4 | 2.24E+0001 | 2.25E+0001 | 2.27E+0001 | 2.29E+0001 | 2.32E+0001 | 2.34E+0001 |
| 3 | 2.27E+0001 | 2.27E+0001 | 2.29E+0001 | 2.31E+0001 | 2.34E+0001 | 2.36E+0001 |
| 2 | 2.28E+0001 | 2.29E+0001 | 2.31E+0001 | 2.33E+0001 | 2.36E+0001 | 2.39E+0001 |
| 1 | 2.29E+0001 | 2.29E+0001 | 2.31E+0001 | 2.34E+0001 | 2.40E+0001 | 2.41E+0001 |

| | | | | | | |
|---|---|---|---|---|---|---|
| | 13 | 14 | 15 | 16 | 17 | 18 |
| | 19 | 20 | 21 | 22 | | |

| | | | | |
|---|---|---|---|---|
| 27 | 2.35E+0001 | 2.36E+0001 | 2.36E+0001 | 2.37E+0001 |
| 26 | 2.35E+0001 | 2.36E+0001 | 2.36E+0001 | 2.37E+0001 |
| 25 | 2.34E+0001 | 2.35E+0001 | 2.36E+0001 | 2.36E+0001 |
| 24 | 2.34E+0001 | 2.35E+0001 | 2.36E+0001 | 2.37E+0001 |
| 23 | 2.34E+0001 | 2.35E+0001 | 2.36E+0001 | 2.38E+0001 |
| 22 | 2.33E+0001 | 2.35E+0001 | 2.36E+0001 | 2.37E+0001 |
| 21 | 2.33E+0001 | 2.35E+0001 | 2.36E+0001 | 2.37E+0001 |
| 20 | 2.33E+0001 | 2.35E+0001 | 2.36E+0001 | 2.38E+0001 |
| 19 | 2.33E+0001 | 2.34E+0001 | 2.36E+0001 | 2.39E+0001 |
| 18 | 2.33E+0001 | 2.34E+0001 | 2.36E+0001 | 2.38E+0001 |
| 17 | 2.32E+0001 | 2.34E+0001 | 2.36E+0001 | 2.37E+0001 |
| 16 | 2.32E+0001 | 2.34E+0001 | 2.36E+0001 | 2.37E+0001 |
| 15 | 2.32E+0001 | 2.34E+0001 | 2.36E+0001 | 2.38E+0001 |

| | | | | |
|---|---|---|---|---|
| 14 | 2.32E+0001 | 2.34E+0001 | 2.36E+0001 | 2.40E+0001 |
| 13 | 2.32E+0001 | 2.34E+0001 | 2.37E+0001 | 2.39E+0001 |
| 12 | 2.32E+0001 | 2.34E+0001 | 2.37E+0001 | 2.39E+0001 |
| 11 | 2.32E+0001 | 2.35E+0001 | 2.37E+0001 | 2.41E+0001 |
| 10 | 2.32E+0001 | 2.35E+0001 | 2.38E+0001 | 2.40E+0001 |
| 9 | 2.33E+0001 | 2.35E+0001 | 2.38E+0001 | 2.40E+0001 |
| 8 | 2.33E+0001 | 2.36E+0001 | 2.38E+0001 | 2.40E+0001 |
| 7 | 2.34E+0001 | 2.36E+0001 | 2.39E+0001 | 2.42E+0001 |
| 6 | 2.35E+0001 | 2.37E+0001 | 2.39E+0001 | 2.41E+0001 |
| 5 | 2.35E+0001 | 2.38E+0001 | 2.40E+0001 | 2.41E+0001 |
| 4 | 2.37E+0001 | 2.39E+0001 | 2.41E+0001 | 2.43E+0001 |
| 3 | 2.38E+0001 | 2.40E+0001 | 2.42E+0001 | 2.43E+0001 |
| 2 | 2.40E+0001 | 2.42E+0001 | 2.43E+0001 | 2.44E+0001 |
| 1 | 2.42E+0001 | 2.43E+0001 | 2.44E+0001 | 2.44E+0001 |
| | 19 | 20 | 21 | 22 |

********** End of logbook **********

# NCBC Gulfport Site 6

FLOWPATH MODELING TASK

WATER BALANCE RESULTS FROM TWELVE INTS TRENCH, PUMPING LEVELS HEAD MAINTAINED AT APPROXIMATELY 3-FT OF DRAWDOWN (EL. 20.4 +/- FT), PARTIALLY PENETRATING WELL POINTS. *07/23/94 KDS/RF*

UNITS OF ALL FLUXES IN [FT^3/D]

| I | J | FLUX | CODEID | NODE# | |
|---|---|---|---|---|---|
| 1 | 27 | 8.2457 | 1 | 1 | constant head |
| 1 | 26 | 17.5845 | 1 | 2 | constant head |
| 1 | 25 | 20.3241 | 1 | 3 | constant head |
| 1 | 24 | 32.4520 | 1 | 4 | constant head |
| 1 | 23 | 28.1696 | 1 | 5 | constant head |
| 1 | 22 | 54.6703 | 1 | 6 | constant head |
| 1 | 21 | 56.4665 | 1 | 7 | constant head |
| 1 | 20 | 64.4956 | 1 | 8 | constant head |
| 1 | 19 | 78.6071 | 1 | 9 | constant head |
| 1 | 18 | 84.4459 | 1 | 10 | constant head |
| 1 | 17 | 88.9225 | 1 | 11 | constant head |
| 1 | 16 | 86.2402 | 1 | 12 | constant head |
| 1 | 15 | 90.7101 | 1 | 13 | constant head |
| 1 | 14 | 104.2764 | 1 | 14 | constant head |
| 1 | 13 | 46.8912 | 1 | 15 | constant head |
| 1 | 12 | 58.9263 | 1 | 16 | constant head |
| 1 | 11 | 46.8898 | 1 | 17 | constant head |
| 1 | 10 | 69.5386 | 1 | 18 | constant head |
| 1 | 9 | 71.0717 | 1 | 19 | constant head |
| 1 | 8 | 66.0099 | 1 | 20 | constant head |
| 1 | 7 | 58.4778 | 1 | 21 | constant head |
| 1 | 6 | 52.9023 | 1 | 22 | constant head |
| 1 | 5 | 69.2073 | 1 | 23 | constant head |
| 1 | 4 | 67.0648 | 1 | 24 | constant head |
| 1 | 3 | 49.0087 | 1 | 25 | constant head |
| 1 | 2 | 37.4281 | 1 | 26 | constant head |
| 1 | 1 | 16.3767 | 1 | 27 | constant head |
| 20 | 27 | 12.2437 | 3 | 28 | constant head |
| 18 | 27 | 33.5156 | 3 | 29 | constant head |
| 17 | 1 | 49.4694 | 3 | 30 | constant head |
| 18 | 1 | 20.9595 | 3 | 31 | constant head |
| 19 | 1 | 15.7238 | 3 | 32 | constant head |
| 20 | 1 | 12.3530 | 3 | 33 | constant head |
| 21 | 1 | 14.2182 | 3 | 34 | constant head |
| 22 | 2 | 15.7784 | 3 | 35 | constant head |
| 22 | 4 | 28.1803 | 3 | 36 | constant head |
| 22 | 7 | 34.1562 | 3 | 37 | constant head |
| 22 | 11 | 37.3140 | 3 | 38 | constant head |
| 22 | 14 | 53.3076 | 3 | 39 | constant head |
| 22 | 19 | 64.3826 | 3 | 40 | constant head |
| 22 | 23 | 44.6120 | 3 | 41 | constant head |
| 22 | 26 | 21.2436 | 3 | 42 | constant head |
| 7 | 13 | 0.0000 | 3 | 1 | flux node |
| 4 | 3 | 0.0000 | 4 | 2 | flux node |

**Sum of all fluxes organized in Codes : 4**

| | | | |
|---|---|---|---|
| 1 | 1525.4034 | CodeID | Total flux |
| 2 | 0.0000 | CodeID | Total flux |
| 3 | 457.4581 | CodeID | Total flux |
| 4 | 0.0000 | CodeID | Total flux |

**Global water balance [ft^3/d] :**

| | |
|---|---|
| 1982.8616 | total IN-flux through const. head nodes |
| 0.0000 | total OUT-flux through const. head nodes |
| 0.0000 | total IN-flux through flux nodes |
| 0.0000 | total OUT-flux through flux nodes |
| 0.0000 | total IN-flux through river nodes |
| 0.0000 | total OUT-flux through river nodes |
| 0.0000 | total IN-flux through injection wells |
| **-2121.8190** | **total OUT-flux through pumping wells** |
| 138.3552 | total net aquifer recharge |
| -0.6023 | sum of all fluxes should be zero |
| **-0.0142%** | total mass balance error |

# Simulation Domain and Boundary Conditions

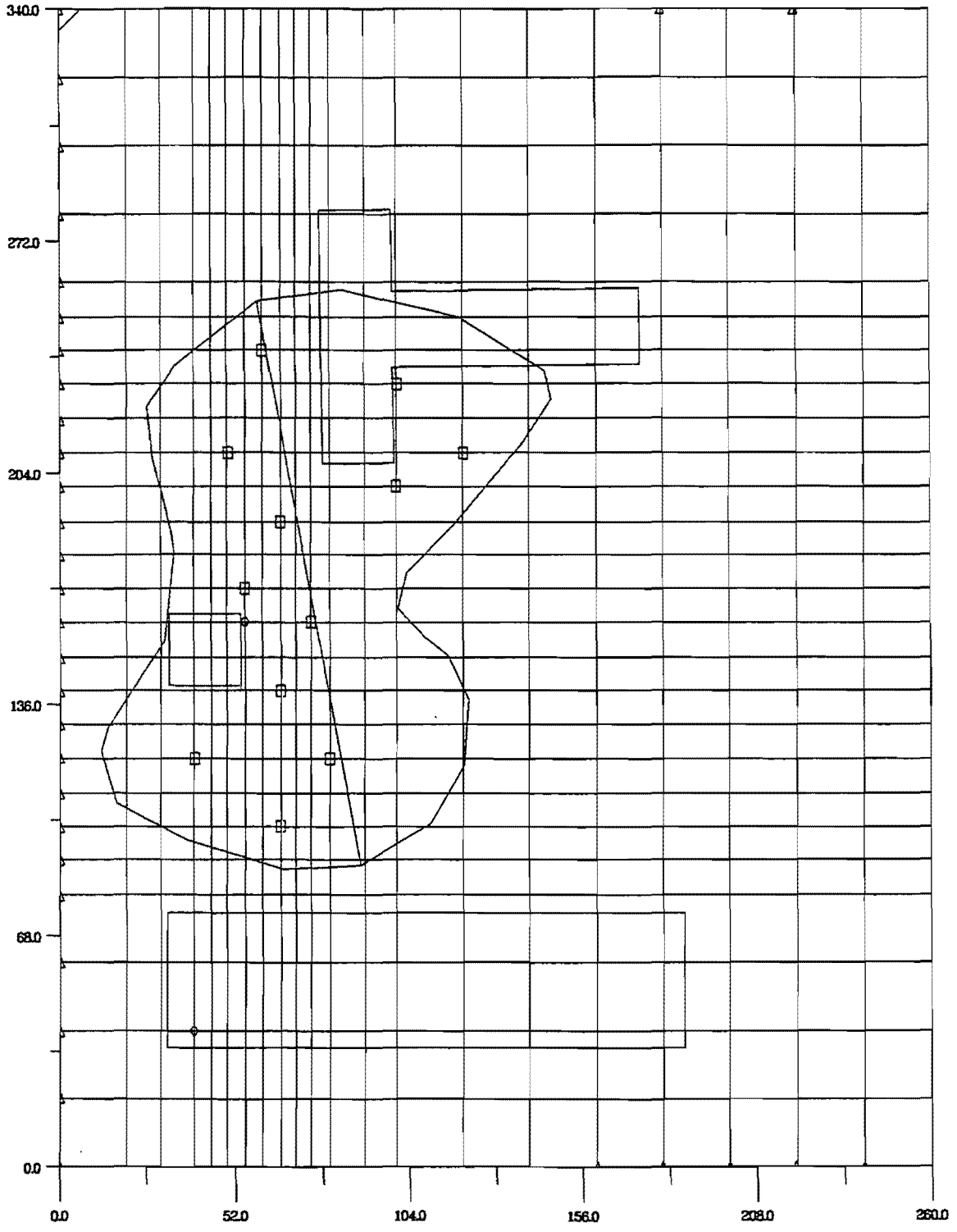


FLOWPA

Copyri

1989-1

by WHS

# Row

27

# Col

22

# Wel

12

Units

[ft]

File

TR65R

Per_Spe.GLP
mlv.11.94

Hydraulic Head Distribution

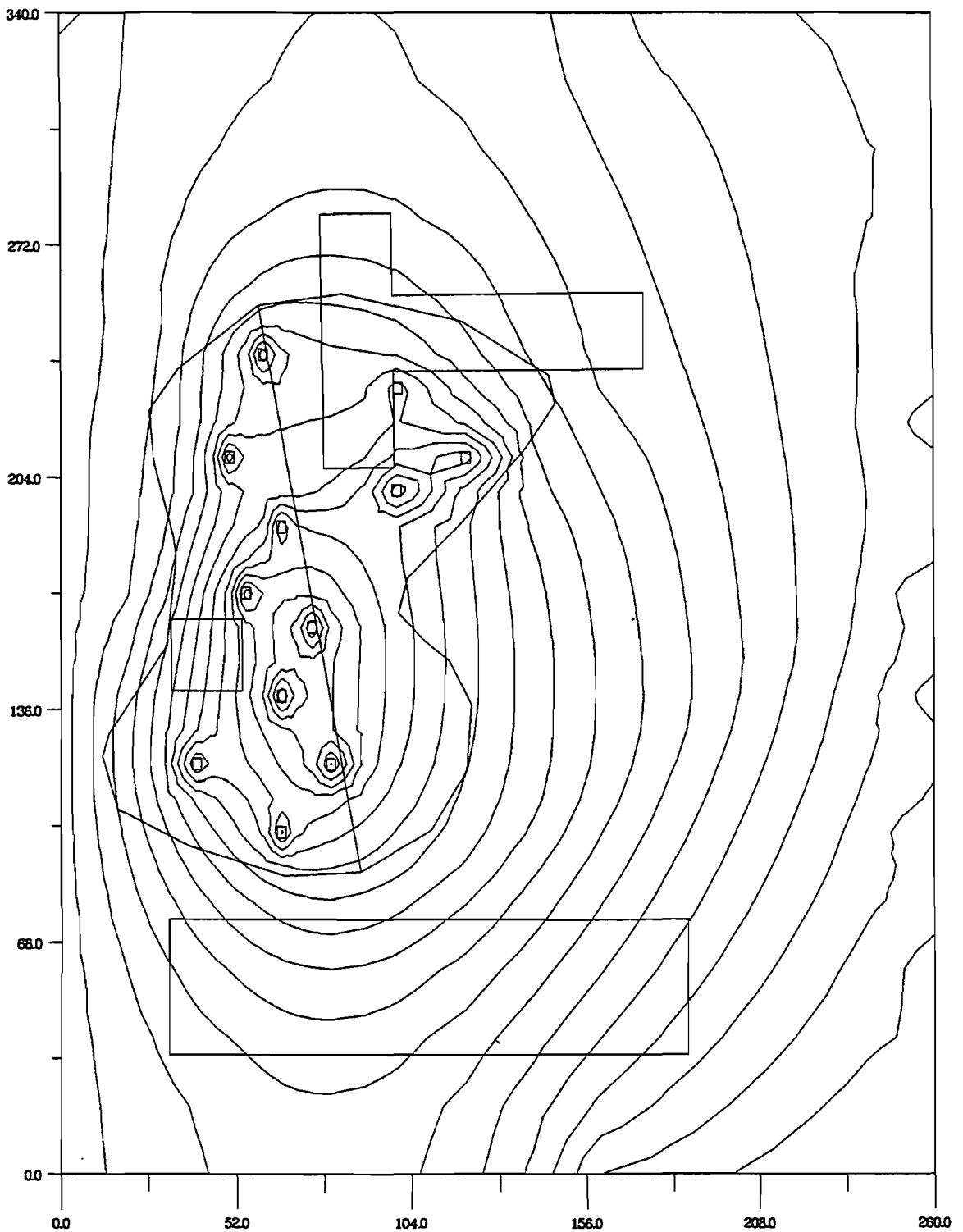


FLOWPA

Copyri

1989-1

by WHS

Stead

State

Flow

Min :

2.0E+

Max :

2.4E+

Inc :

2.0E-

Units

[ft]

File

TR65R

Per_Spe.GLP
mlv.11.94

# Velocity Distribution

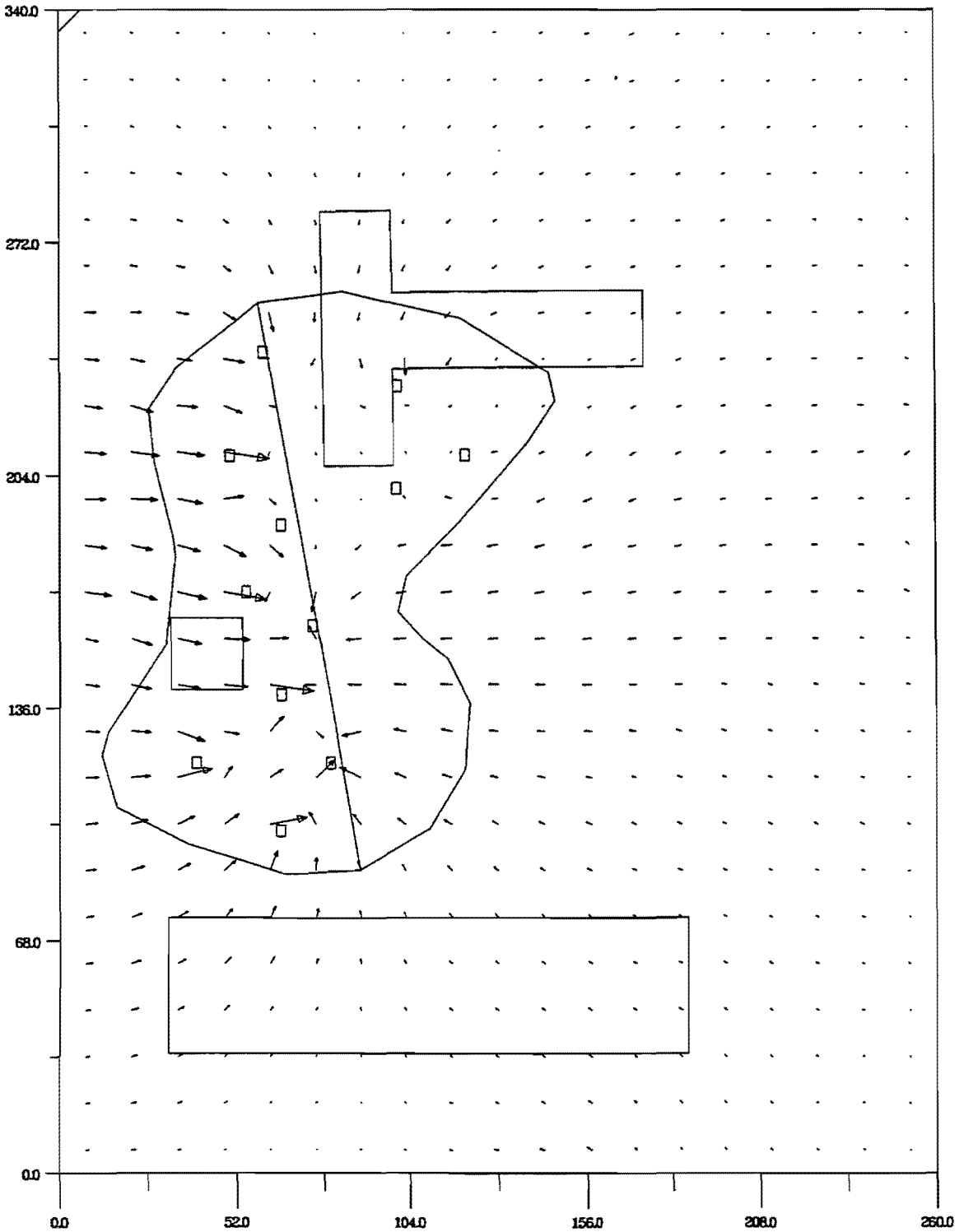


FLOWPA

Copyri

1989-1

by WHS

# Wel

12

Vmin

2.4E-

Vmax

2.0E+

Vavg

3.0E-

Angle

3.5E+

Units

[ft]

File

TR65R

Per_Spe.GLP
mlv.11.94

# Pathlines

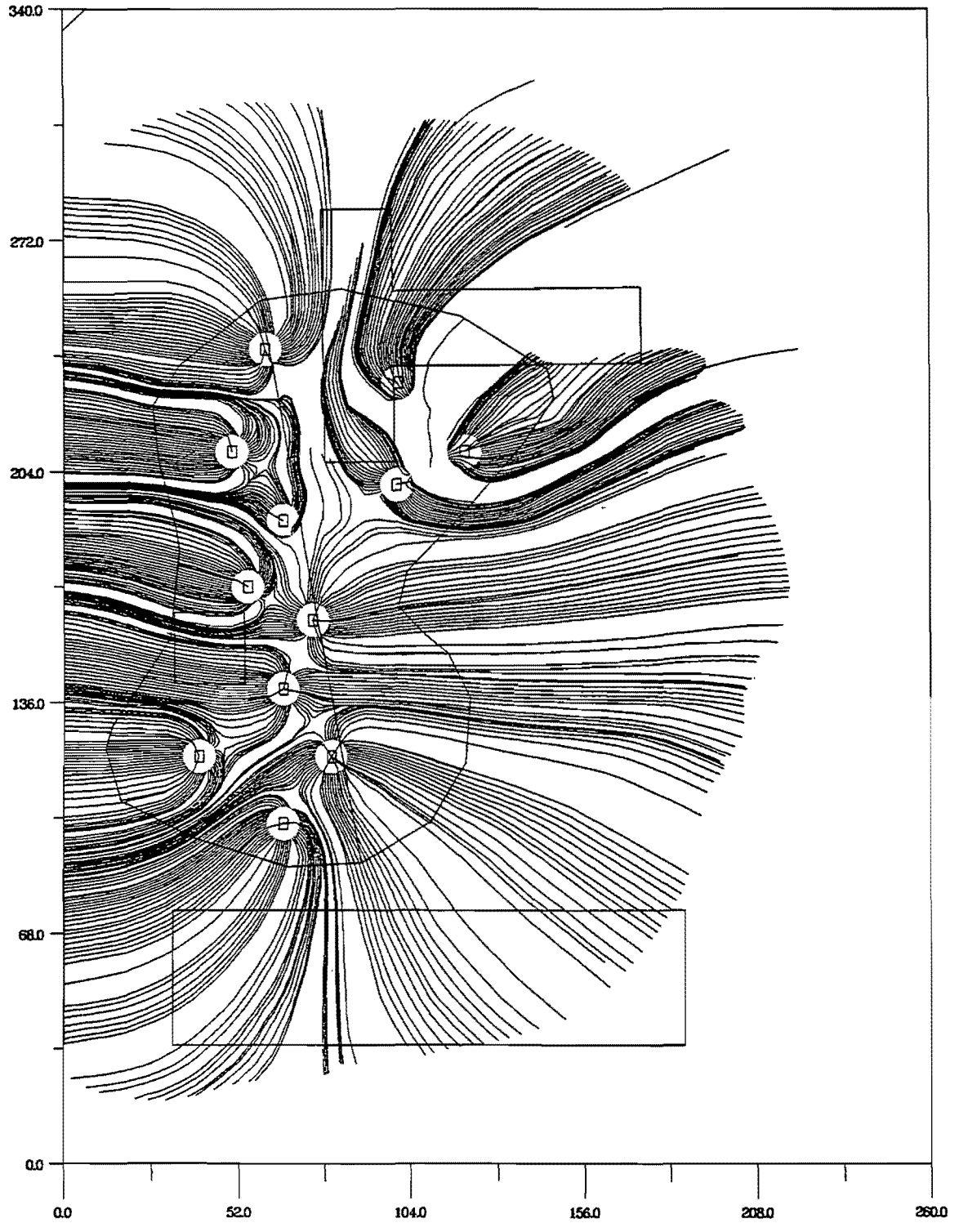


FLOWPATH

Copyright

1989-1992

by WHS

Steady

State

Flow

Time :

3.7E+0002 d

Retard :

1.0E+0000

Units :

(ft)

File :

TR65R

Per_Spe.GLP
mlv.11.94

# Capture Zone

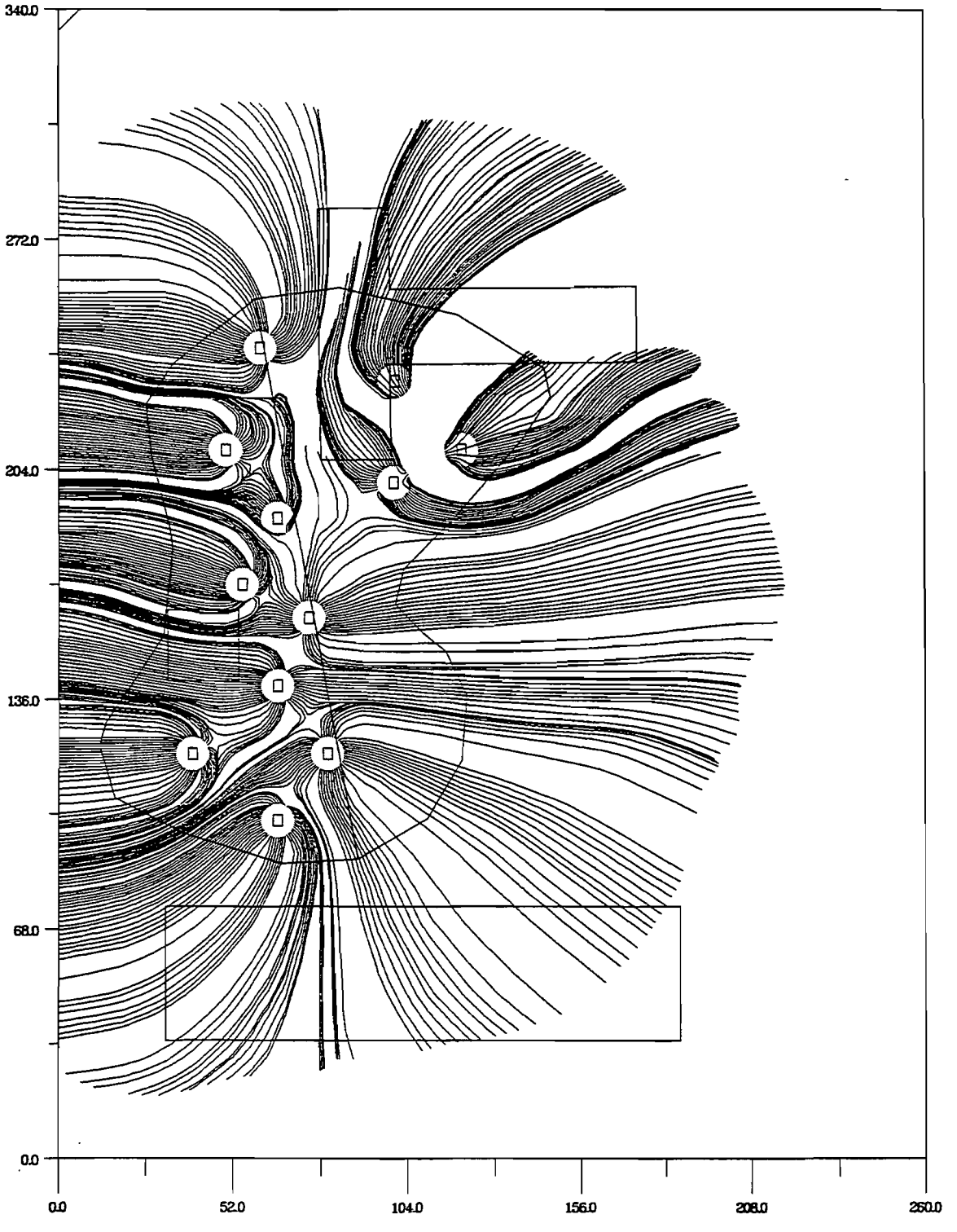


FLOWPATH

Copyright

1989–1992

by WHS

Steady

State

Flow

Time :

3.7E+0002 d

Retard :

1.0E+0000

Units :

ft

File :

TR65R

Per_Spe.GLP
mlv.11.94

# Pathlines

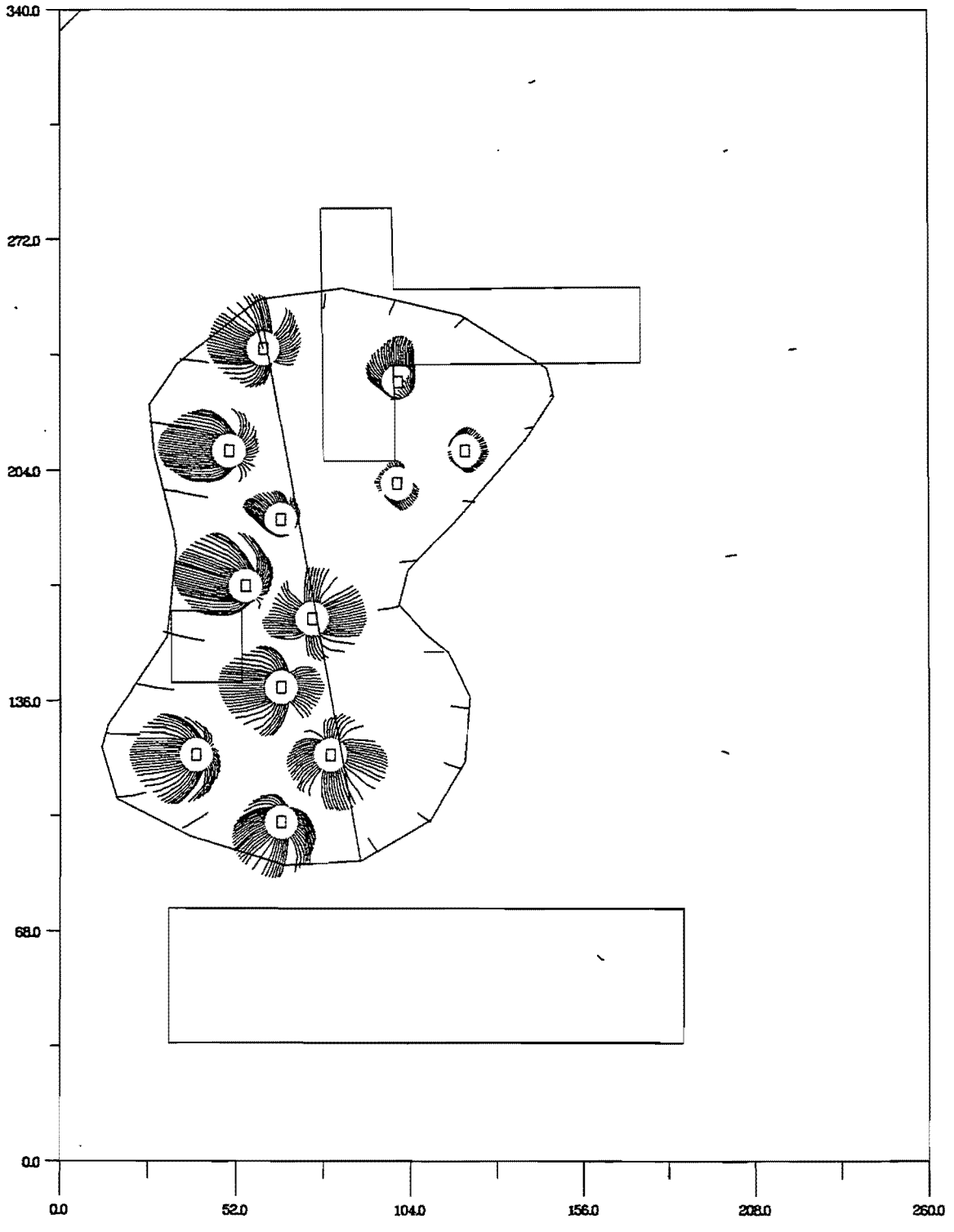


FLOWPATH

Copyright

1989–1992

by WHS

Steady

State

Flow

Time :

3.7E+0002 d

Retard :

3.1E+0001

Units :

(ft)

File :

TR55R

Per_Spe.GLP
mlv.11.94

# Capture Zone

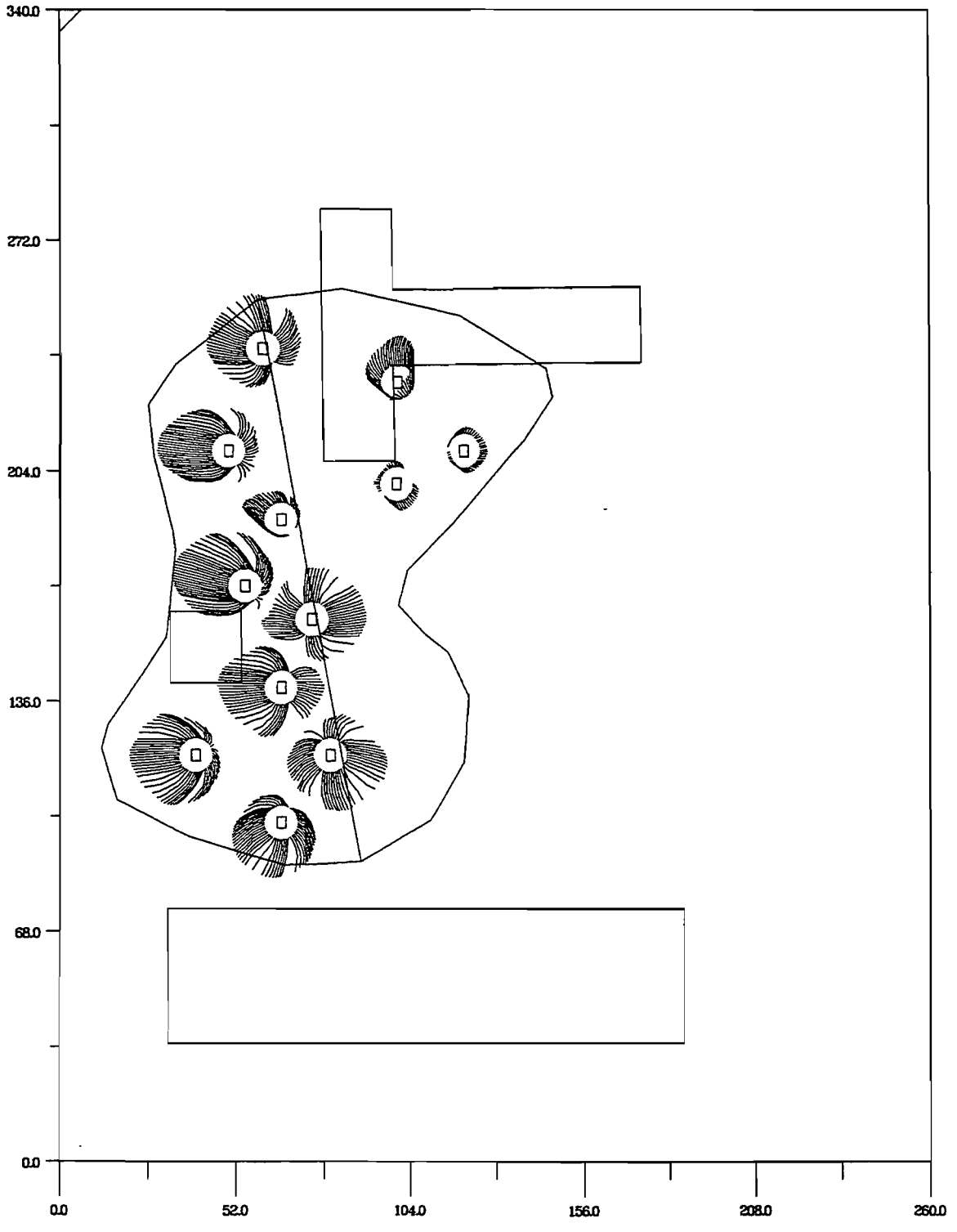


FLOWPATH

Copyright

1989-1992

by WHS

Steady

State

Flow

Time :

3.7E+0002 d

Retard :

3.1E+0001

Units :

[ft]

File :

TR65R

Per_Spe.GLP
mlv.11.94

# Pathlines

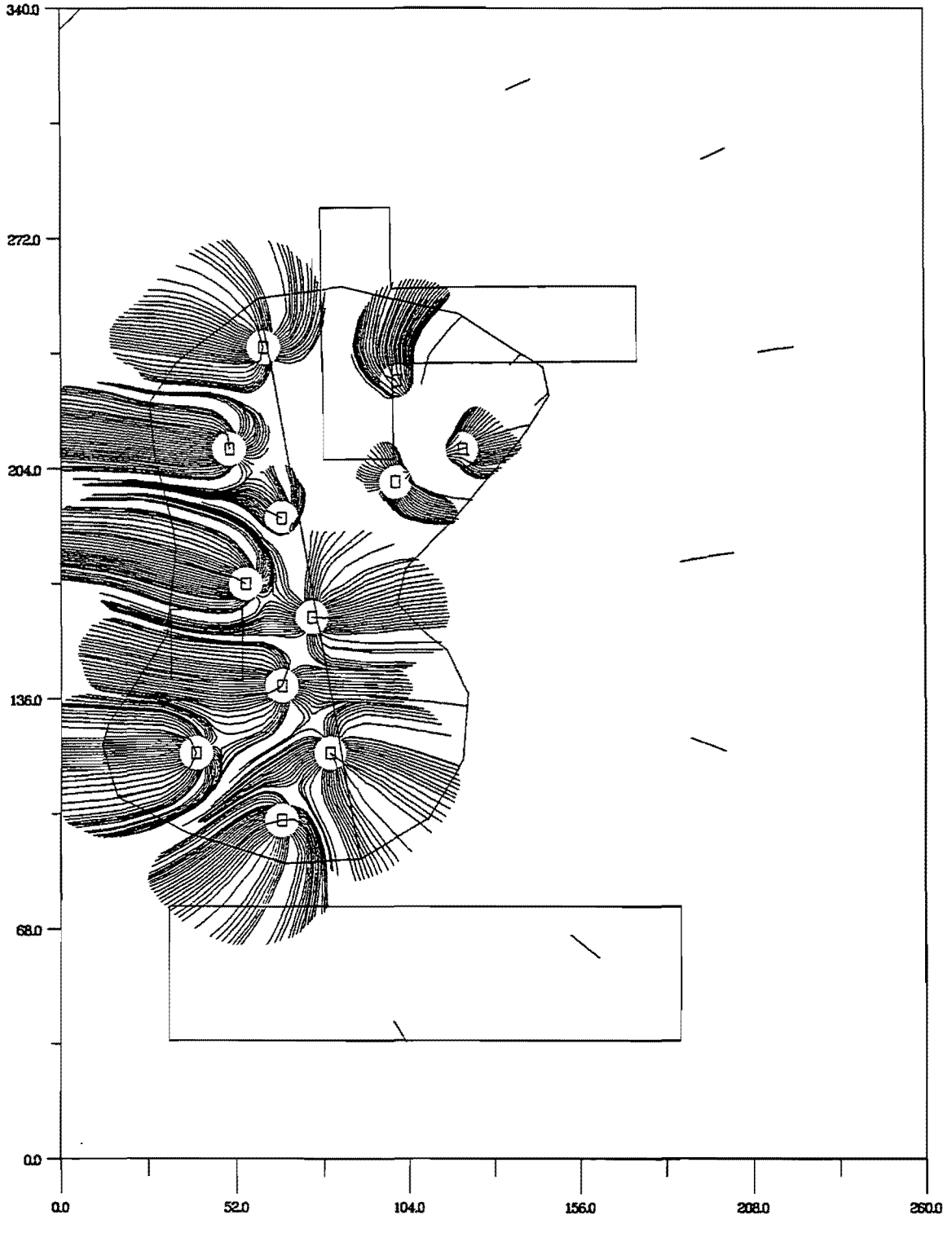


FLOWPATH

Copyright

1989-1992

by WHS

Steady

State

Flow

Time :

1.8E+0003 d

Retard :

3.1E+0001

Units :

ft

File :

TR65R

Per_Spe.GLP
mlv.11.94

# Capture Zone

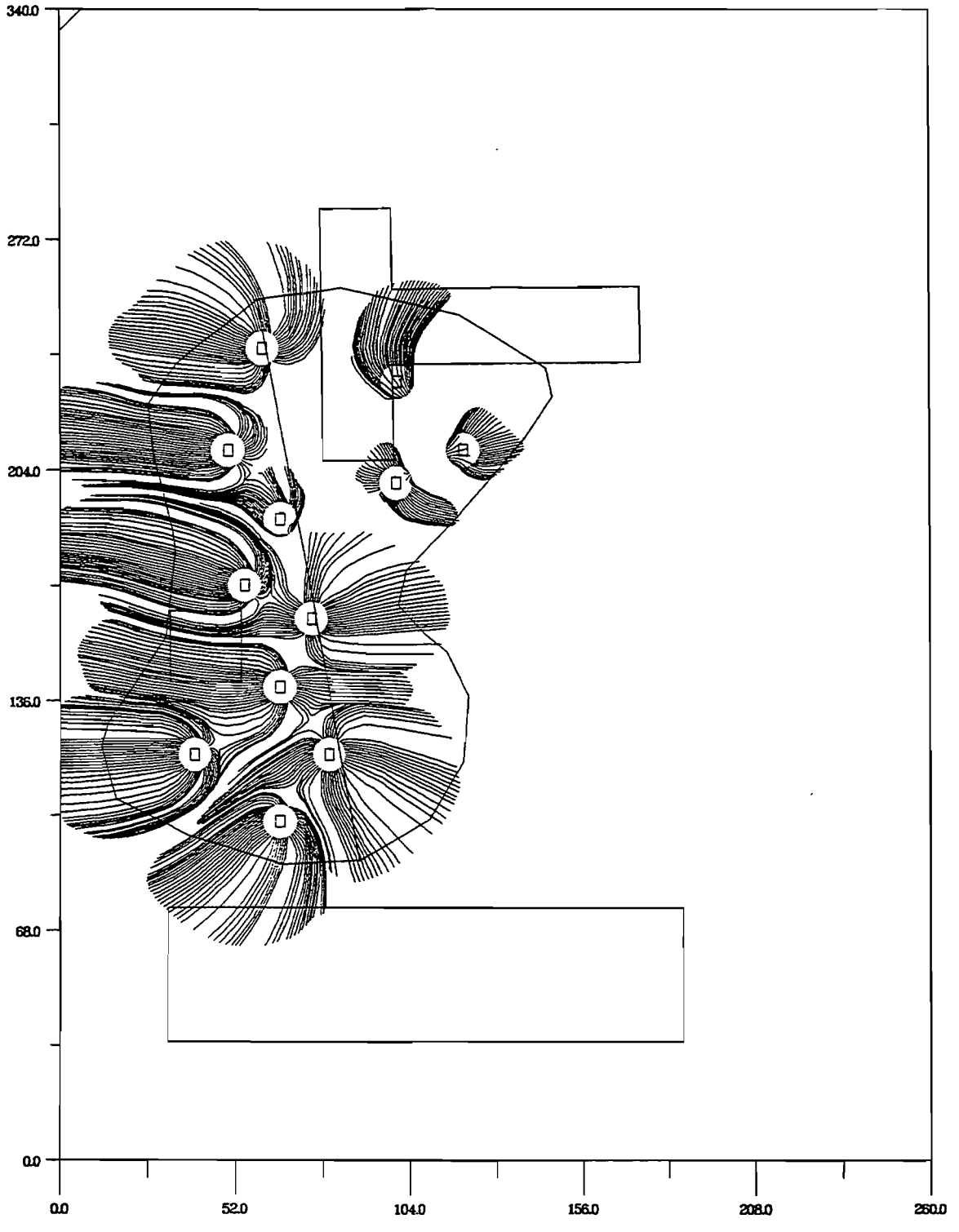


FLOWPATH

Copyright

1989–1992

by WHS

Steady

State

Flow

Time :

1.8E+0003 d

Retard :

3.1E+0001

Units :

ft/d

File :

TR55R

Per_Spe.GLP
mlv.11.94

# Pathlines

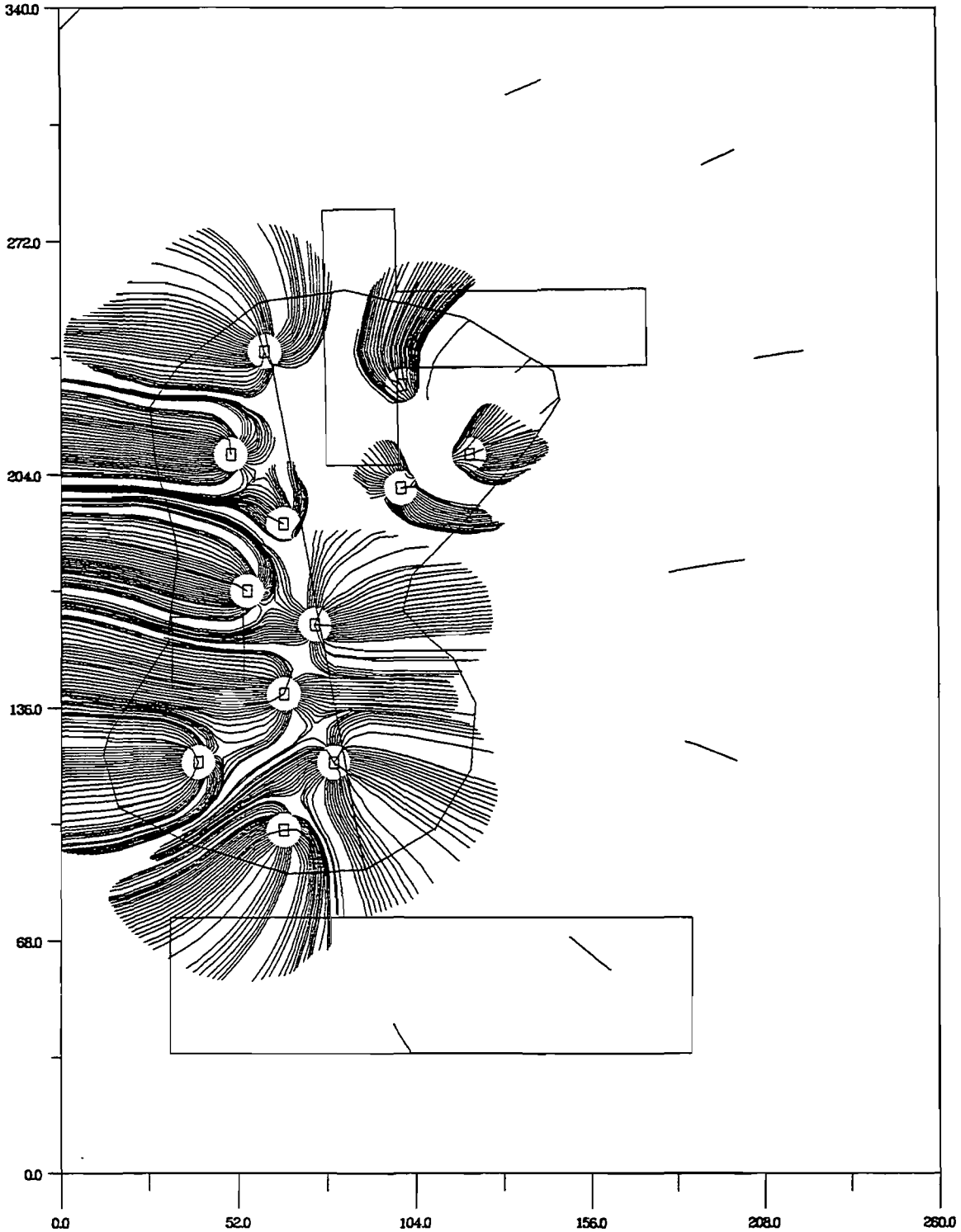


FLOWPATH

Copyright

1989–1992

by WHS

Steady

State

Flow

Time :

2.6E+0003 d

Retard :

3.1E+0001

Units :

ft

File :

TR55R

Per_Spe.GLP
mlv.11.94

# Capture Zone

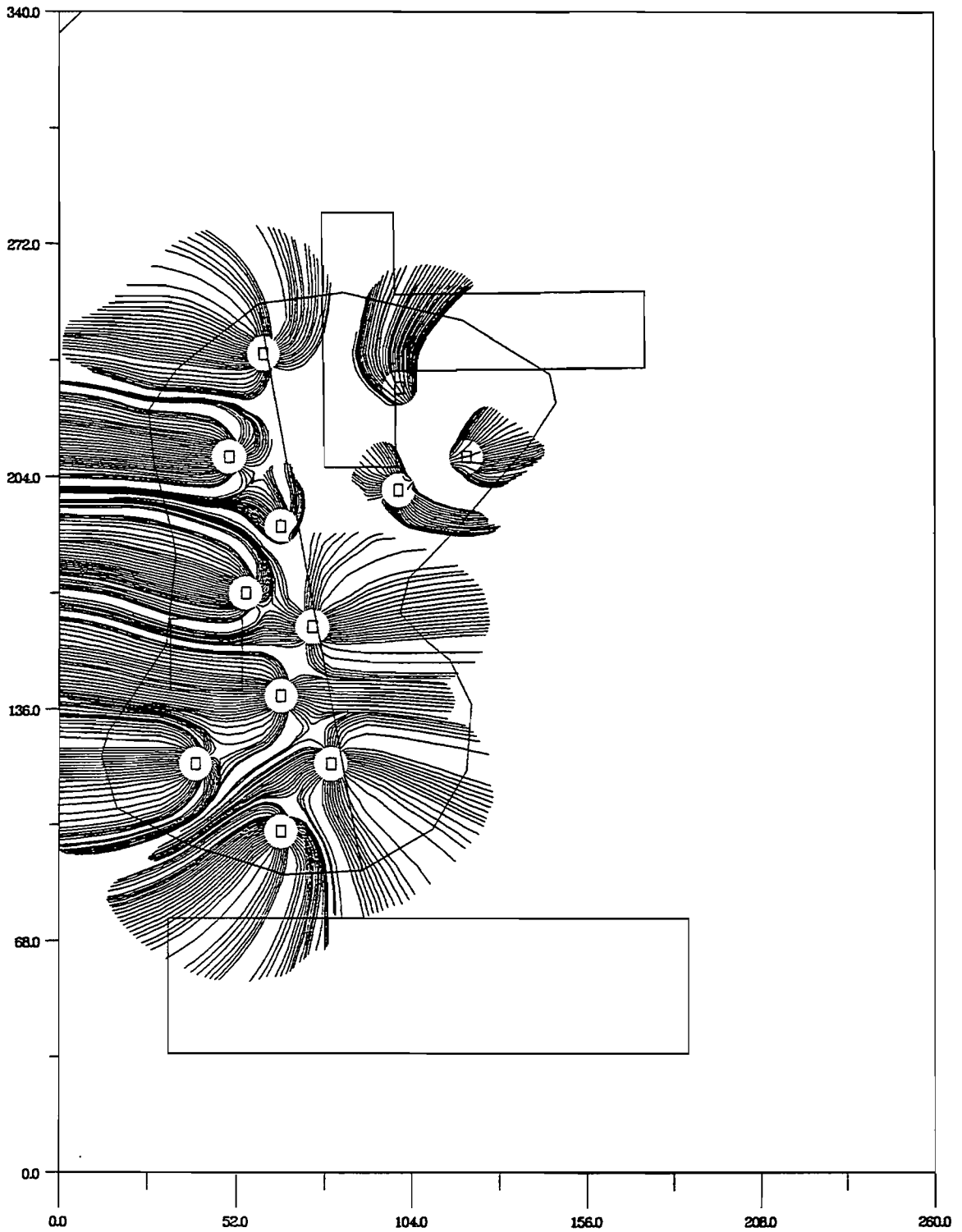


FLOWPATH

Copyright

1989-1992

by WHS

Steady

State

Flow

Time :

2.6E+0003 d

Retard :

3.1E+0001

Units :

ft

File :

TR65R

Per_Spe.GLP
mlv.11.94

| PROJECT | COMP. BY | JOB NO. |
|---|---|---|
| NCBC GULFPORT, MS SITE 6 FPPA | KDS | 8503.70 |
| | CHK. BY | DATE |

FLOWPATH EM by Waterloo Hydrogeologic Software, Inc.

ASSUMPTIONS for NCBC GULFPORT, SITE 6

| Parameter | Default | Other Specified Areas |
|---|---|---|
| Hydraulic Conductivity | 5.7 ft/day | 0.57 ft/day<br>2.8 ft/day<br>25.5 ft/day<br>K of trench 227 ft/day |
| Effective Porosity | 0.25 | 0.22<br>0.25<br>0.27<br>0.33 trench fill |
| Constant Heads | El. 23.3' m/w West<br>El. 24.4' m/w Southeast | |
| Bottom of Aquifer | El. -5.0 m/w | El -6.0 to<br>El. -15.0' m/w along South boundary (sweeping from southeast to west in a NW orientation) |

Note: "Bottom of Aquifer" below Partially Penetrating Trench El. +13.0 m/w

| | | |
|---|---|---|
| Recharge | | |
| Infiltration | .0125 ft/day ditches<br>.0110 ft/day field<br>~~0.00910 65~~ ft/day | 0 at paved area & bldgs |
| Evaporation | 0.0091 ft/day | 0 at paved area & bldgs. |
| Constant head @ Trench | 20.4' and 21.9' m/w | |

Per_Spe.GLP
mlv.11.94

# APPENDIX F

# APPENDIX F

# CALCULATIONS

# PARTICLE-SIZE ANALYSIS

ASTM D422

PROJECT DESCRIPTION: Gulfport Site 6 FPPA/F-PP Extraction System "Trench Design"

MATERIALS LABORATORY:

SAMPLE LOCATION: SAMPLE NO.

TYPE OF SAMPLE: Fine to med Sand w/ Trace silt Depth 8 ft & 15 ft

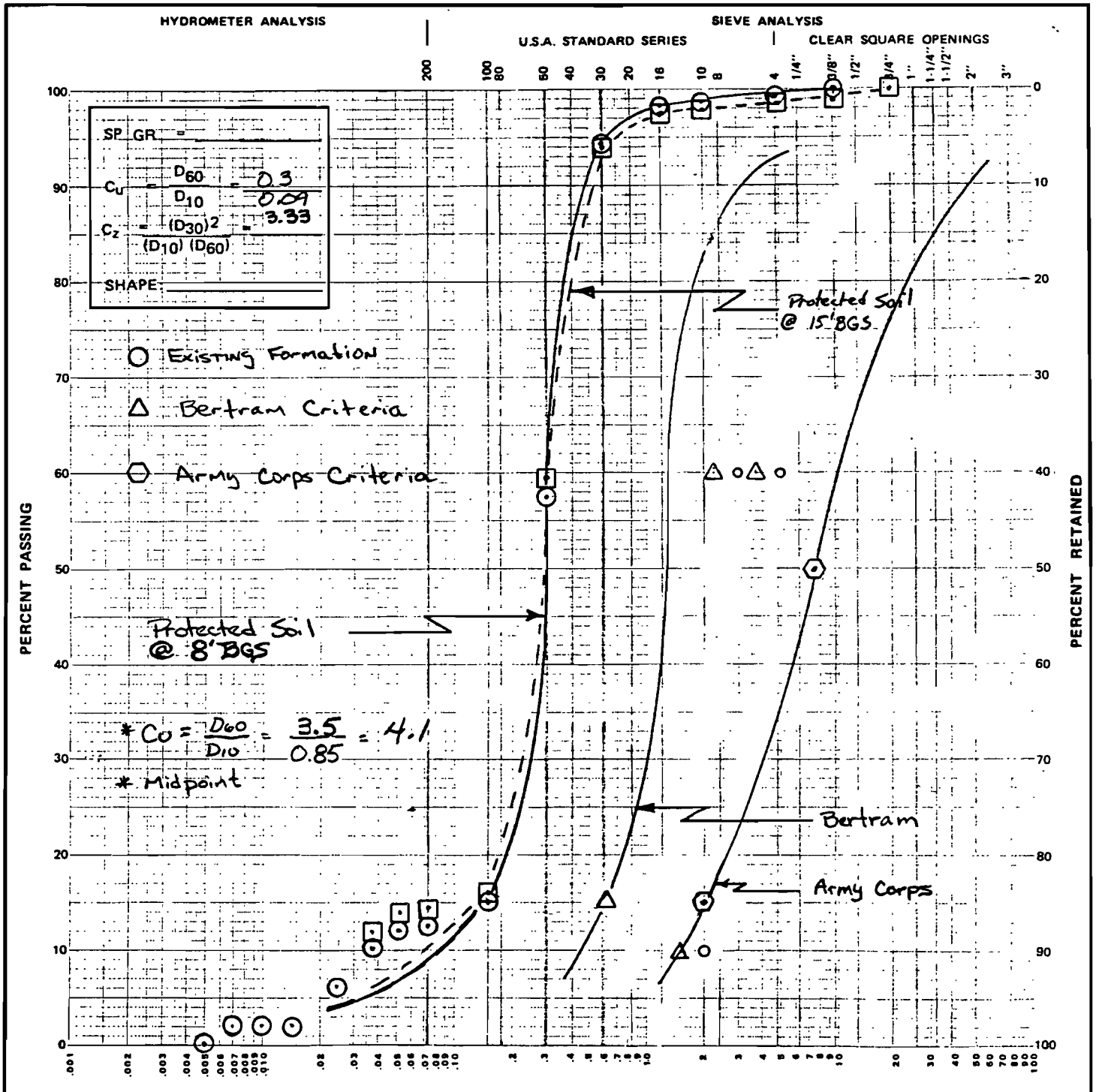


| COL-LOIDS | CLAY SIZE | SILT SIZE | SAND | | | | COBBLES |
|---|---|---|---|---|---|---|---|
| | | | FINE | MEDIUM | COARSE | | |

SAMPLE CLASSIFICATION

| TESTED BY: | DATE: | COMPUTED BY: | DATE: | CHECKED BY: KDS | DATE: 7-21-94 |
|---|---|---|---|---|---|

Per_Spe.GLP
mlv.11.94

| PROJECT Gulfport | COMP. BY HF | JOB NO. 8505.70 |
|---|---|---|
| Filter Pack Design "Trench" | CHK. BY KDS 7/21 | DATE 7/19/94 |

Coefficient of Uniformity : Assumptions for Granular Fill Material

$$Cu = \frac{D_{60}}{D_{10}}$$

$D_{10} = 1.5$ MM

if $Cu = 2.5$

$D_{60} = 2.5(1.5) = 3.75$ MM

if $Cu = 2.25$

$D_{60} = 2.25(1.5) = 3.375$ MM

if $Cu = 2.0$

$D_{60} = 2.0(1.5) = 3.00$ MM

if $Cu = 1.75$

$D_{60} = 1.75(1.5) = 2.625$ MM

if $Cu = 1.5$

$D_{60} = 1.5(1.5) = 2.25$ MM

| PROJECT Gulfport<br>Filter Pack Design "Trench" | COMP. BY H F<br>CHK. BY KDS 7-21 | JOB NO. 8505<br>DATE 7-19-94 |
|---|---|---|

$$C_u = \frac{D_{60}}{D_{10}}$$

$D_{10}$ = 2.0 MM or #10 SIEVE

- if $C_u$ = 2.50

  $D_{60}$ = 2.5 (2.0) = 5.0 MM

- if $C_u$ = 2.25

  $D_{60}$ = 2.25 (2.0) = 4.50 MM

- if $C_u$ = 2.00

  $D_{60}$ = 2.00 (2.0) = 4.0 MM

- if $C_u$ = 1.75

  $D_{60}$ = 1.75 (2.0) = 3.50 MM

- if $C_u$ = 1.5

  $D_{60}$ = 1.50 (2.0) = 3.00 MM

| PROJECT Gulfport | COMP. BY | JOB NO. |
|---|---|---|
| Trench Design Ranges | CHK. BY | DATE |

— Bertram Criteria

$D_{15(soil)} \times 4 = D_{15}$ (filter)

$0.15 \times 4 = 0.6$ MM

* this projects down to a $D_{10}$ equalling 0.45 mm

using a target Cu of 2.5 $\left[ C_u = \frac{D_{60}}{D_{10}} \right]$

therefore $D_{60} = 0.45 \times 2.5 = \underline{1.125}$

— US Army Corp of Engineers (COE)

$D_{10}$ projects down to 1.5 mm

Using Cu of 2.50

$D_{60} = 1.5 \times 2.5 = 3.75$ mm

The following filter pack design range was determined by using the projected $D_{10}$ values from the curves that were established using criteria set up by Bertram and the U.S. Army Corps. The Bertram and Army Corps curves are derived directly from the existing soil curve. After the $D_{10}$ value was define for both sets of criteria new curves were drawn using a coefficient of uniformity (Cu) of Cu = 2.5.

H. Faircloth

SHEET ___ OF ___

| Design Ranges | PROJECT NUMBER 8505.70 |
|---|---|

# PARTICLE-SIZE ANALYSIS

ASTM D422

PROJECT DESCRIPTION: Gulfport "Trench Design"

MATERIALS LABORATORY: Filter Pack

SAMPLE LOCATION: _____ SAMPLE NO. _____

TYPE OF SAMPLE: — Quartz Grains —

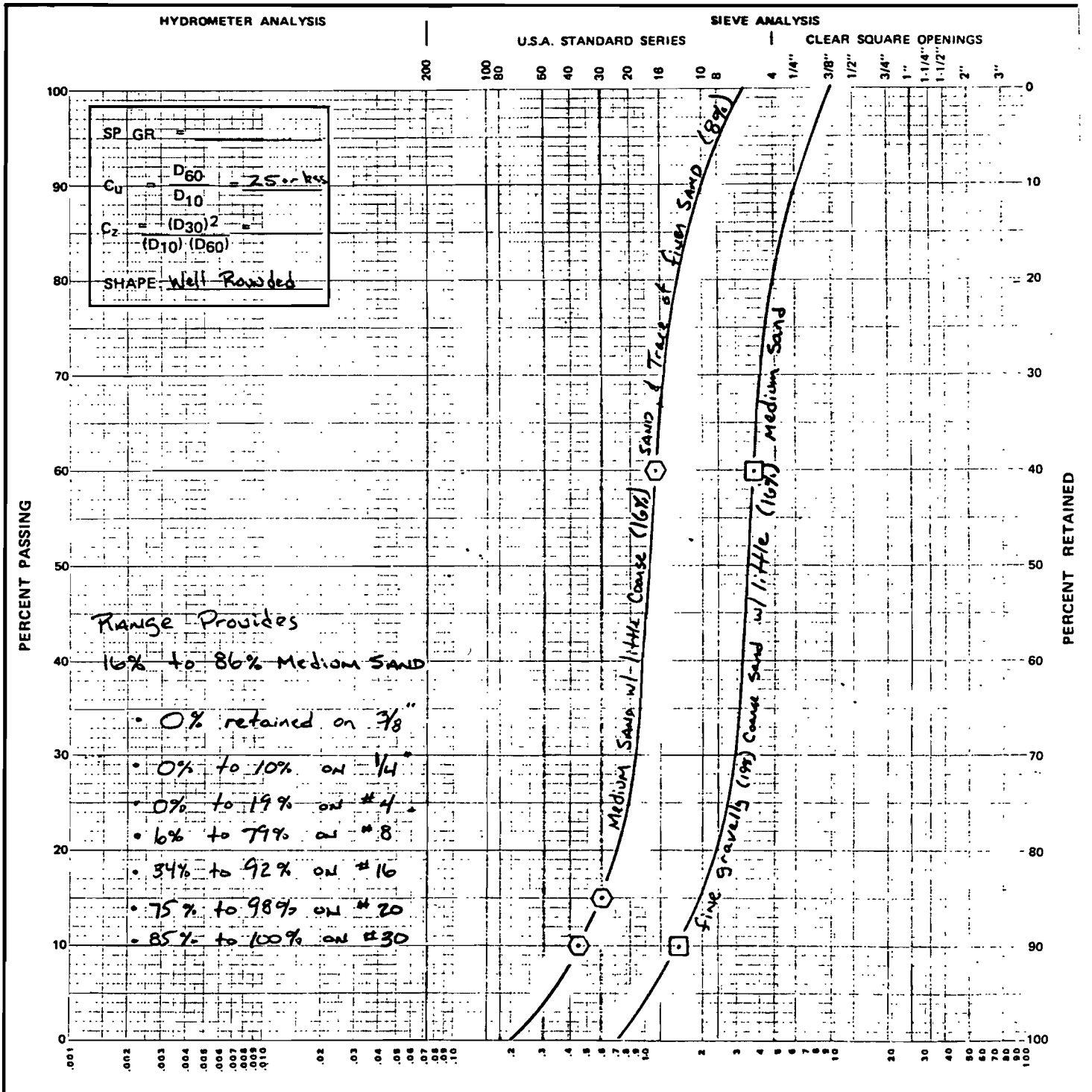


| TESTED BY: | DATE: | COMPUTED BY: | DATE: | CHECKED BY: KDS | DATE: 7-21-94 |
|---|---|---|---|---|---|

Per_Spe.GLP
mlv.11.94

| PROJECT | COMP. BY | JOB NO. |
|---|---|---|
| Filter Pack Design | H.F | 8505.70 |
| | CHK. BY | DATE |

| Dsize Finer | Size Range (mm) |
|---|---|
| $D_0$ | 0.20 – 0.70 |
| $D_{10}$ | 0.45 – 1.50 |
| $D_{30}$ | 0.90 – 2.90 |
| $D_{50}$ | 1.05 – 3.50 |
| $D_{60}$ | 1.13 – 3.75 |
| $D_{70}$ | 1.25 – 4.00 |
| $D_{90}$ | 2.00 – 6.30 |
| $D_{100}$ | 3.50 – 9.53 |

* Range provides for 16% to 86% Medium Sand

Granular filter pack material should fall between these specified ranges, and follow the succeeding characteristics:

- clean,
- well rounded grains,
- 90 – 95 % quartz grains
- coefficient of uniformity of 2.5 or less

| PROJECT Gulfport Trench Design<br>Slot sizing for Collection | COMP. BY H.F<br>CHK. BY KDS 7-21 | JOB NO. 8505-70<br>DATE 7-19-94 |
|---|---|---|

$D_{10}$ range is 0.45MM to 1.5 MM from the design range curves. Therefore, since the slotted collection piping MUST be able to hold back a minimum of 90% of the filter pack a 0.45 MM or 0.02 IN slot will be considered.

As a check compared w/ U.S. Army Corps criteria for gradation of filter material in relation to slots.

$$\frac{85\% \text{ size of filter material}}{\text{Slot width}} > 1.2$$

$$\frac{.60}{.45} = 1.33 > 1.2 \quad \text{o.k.}$$

| PROJECT | COMP. BY | JOB NO. |
|---|---|---|
| | 7/7 | 8505.70 |
| | CHK. BY | DATE |
| | [illegible] | 8-4-94 |

Design Recovery Trench Wells:

Proposed Design:

4-inch diameter HDPE well (d)
10 feet of 0.020 inch slotted Screen

Design flow rate

Design standard: entrance velocity of water into well MUST not exceed 0.1 ft/s

Ref: Driscoll, F.G., Groundwater and Wells, 2nd Ed, Johnson Division, St. Paul Mn, 1987, pg. 449

1. Calculate the surface area for each 1-ft length of screen:

$$\text{Area} = \pi d \cdot 12$$
$$= 3.14 \cdot 4 \cdot 12$$
$$= 151 \text{ in}^2/\text{ft of screen}$$

2. Calculate total area for 10 ft of screen:

$$151 \cdot 10 = 1510 \text{ in}^2$$

3. Calculate the percentage of open area of the screen, based on the wire width used to fabricate the screen and the slot size required:

$$\% \text{ Open Area} = \frac{\text{Slot size}}{\text{Slot size + span between cut slots}} \times 100$$
$$= \frac{0.020}{0.020 + .236}$$
$$= 7.8\ \%$$

| PROJECT | COMP. BY HF | JOB NO. 8505.70 |
|---|---|---|
| | CHK. BY KK | DATE 8-4-94 |

4. Calculate the amount of open area:

Open area = surface area · % open area

= 1510 · 0.078

= 117.8 in² ÷ 144

= 0.82 ft²

Open area per ft of screen = 0.82 ÷ 10 = 0.082 ft²

5 Calculate the average entrance velocity of water moving into slots, by

$$Q = VA$$

where

Q = anticipated yield, ft³/sec, 10 gpm = 0.022 ft
V = entrance velocity, ft/sec
A = screen open area, ft², 0.82 ft²

$$V = Q/A$$

$$V = \frac{0.022}{0.82} = 0.027 \text{ ft/sec}$$

0.027 ft/sec does not exceed 0.1 ft/sec therefore design is adequate

| PROJECT | COMP. BY | JOB NO. |
|---|---|---|
| Submersible Pump Sizing | H. F. | 8505.70 |
| | CHK. BY | DATE 7/30/94 |

## Calculate Head Loss

### Elevation head

Assume:

drawdown = 5 ft

depth to static water = 5 ft

hieght to oil/water separator = 10 ft

misc elev. changes = 2 ft

head loss he = 22 ft

### Minor losses

Pipe diameter = 1.5 inch

Flow (Q) = 10.0 gpm (Assumed)

$$hl = \frac{Kv^2}{2g}$$

$$V = Q/A$$

$$Q = 10\,gpm = 2.23 \times 10^{-2}\ ft^3/s$$

$$A = \pi r^2 = 3.14 \cdot (.75/12)^2 = 0.0123\ ft^2$$

$$\therefore\ V = \frac{.0223\,ft^3/s}{0.0123\,ft^2} = 1.81\ ft/s$$

| PROJECT | COMP. BY | JOB NO. |
|---|---|---|
| Submersible Pump Sizing | H. F | 8505.70 |
| | CHK. BY | DATE 7/30/94 |

| Item | No. | K |
|---|---|---|
| 90° elbows | 7 | 0.9 |
| 45° elbows | 4 | 0.7 |
| Ball Check Valve | 2 | 70 |
| Flow Meter | 1 | 10 |

Note: K values from FDER RAP guidance document

$$hl = \frac{v^2}{2g}\left[7(0.9) + 4(0.7) + 2(70) + 1(10)\right]$$

$$hl = \frac{(1.81\ ft/s)^2}{2(32.2\ ft/s^2)}(159.1)$$

total minor $h_l = \underline{8.1\ ft}$

Friction loss in pipe

Use Darcy - Weisbach formula:

$$hf = f\frac{L v^2}{D 2g}$$

f = friction factor

L = Length of pipe (300 ft)

D = pipe diameter (1.5 in)

V = 1.81 ft/s

| PROJECT | COMP. BY | JOB NO. |
|---|---|---|
| Submersible Pump Sizing | H.F | 8505.70 |
| | CHK. BY | DATE 7/30/94 |

To determine f:

REF : Evett, J.B, and Liu, C, Fundamentals of Fluid Mechanics, McGraw Hill, 1987.

for steel use $E = 0.00015$

$E/D = 0.0012$

Reynolds Number:

$N_R = VD/\nu$

$V = 1.81$ ft/s

$D = 1.5$ in or $.125$ ft

$\nu$ = Kinematic viscosity for T = 70 degrees $1.05 \times 10^{-5}$ ft²/sec

$$N_R = \frac{1.81 \text{ ft/s} (.125 \text{ ft})}{1.05 \times 10^{-5} \text{ ft}^2/\text{s}} = 2.15 \times 10^4$$

(turbulent flow)

$\therefore f = 0.028$

$$hf = 0.028 \frac{(300 \text{ ft})(1.81 \text{ ft/s})^2}{(.125 \text{ ft})\,[2(32.2 \text{ ft/s}^2)]}$$

Friction in Pipe $hf = 3.4$ ft

| PROJECT | COMP. BY | JOB NO. |
|---|---|---|
| Submersible Pump Sizing | H.F | 8505.70 |
| | CHK. BY | DATE 7/30/94 |

## Total Head Loss

Total Head Loss (THL) = he + hl + hf

THL = 22.0 + 8.1 + 3.4

THL = 33.5 Ft

Pump Must be able to over come a minimum of 32.5 feet of head.

| PROJECT | COMP. BY | JOB NO. |
|---|---|---|
| Submersible Pump Sizing | H.F. | 8505.70 |
| | CHK. BY | DATE 7/30/94 |

* Assuming Pipes flowing with SAE 10 oil

Calculating head loss due to friction:

Given: $V = 1.02$ ft/s

$L = 300$ ft

$D = .167$ ft

Ref: Evett, J.B. and Liu, C, Fundamentals of Fluid Mechanics, McGraw Hill, 1987

Reynolds Number:

$$N_R = \frac{\rho D V}{\mu}$$

$\rho = 1.68$ slugs/ft$^3$ = 1.68 lb-s$^2$/ft$^4$

$\mu = 1.70 \times 10^{-3}$ lb-s/ft$^2$

$$N_R = \frac{(1.68\ \cancel{lb}\text{-}\cancel{s^2}/\cancel{ft^4})(.167\ \cancel{ft})(1.02\ \cancel{ft}/\cancel{s})}{1.70 \times 10^{-3}\ \cancel{lb}\text{-}\cancel{s}/\cancel{ft^2}}$$

$N_R = 168.3$

$168.3 < 2000$ ∴ flow is laminar

$$f = \frac{64}{N_R} = \frac{64}{168.3} = 0.38$$

$$h_f = f \frac{L}{D} \frac{V^2}{2g}$$

$$h_f = .38 \frac{300\,(1.02^2)}{.167\,(64.4)}$$

$h_f = \underline{\underline{11\ ft}}$ if flowing w/ SAE 10 oil

| PROJECT | COMP. BY | JOB NO. |
|---|---|---|
| Maintanence Pipe Design | CHK. BY | DATE |

Ref: Driscoll, F.G., Groundwater and Wells, 2nd Ed, Johnson Division, St. Paul Mn, 1987, pg 449

1. Calculate the surface area for each 1ft length of screen:

$$\text{Area} = \pi d \cdot 12$$
$$= 3.14(1.5) \cdot 12$$
$$= 56.52$$

where d = screen diameter

2. Calculate total area for 70 ft screen:

$$70 \cdot 56.52 = 3956.4 \text{ in}^2 = 27.475 \text{ ft}^2$$

3. Calculate the percentage of open area of the screen, based on slot size and space between slots for PVC:

$$\% \text{ Open Area} = \frac{\text{slot size}}{\text{slot size} - \text{space}}$$
$$= \frac{0.010 \text{ in}}{0.010 \text{ in} + .236 \text{ in}}$$
$$= 4\% \text{ open area}$$

4. Calculate the amount of open area:

$$\text{Open area} = \text{surface area} \cdot \% \text{ open area}$$
$$= 3956.4 \cdot 0.04$$
$$= 158.26 / 144$$
$$= 1.1 \text{ ft}^2$$

Open area per ft of screen $= 1.1/70 = .016 \text{ ft}^2$

| PROJECT | COMP. BY | JOB NO. |
|---|---|---|
| | CHK. BY | DATE |

5. Calculate the average entrance velocity of water moving into the slots

$$Q = VA$$

where

$Q$ = anticipated yield, $ft^3/sec$ 2 - 8 gpm (.0045 $ft^3/s$ - .018

$V$ = entrance (exit) velocity, in ft/sec

$A$ = screen open area, $ft^2$

$$\therefore \quad V = Q/A$$

$$V = \frac{.0045}{.016} = .281 \quad \underline{NG}$$

# CENTRIFUGAL PUMP CALCULATION SHEET

PROJ/DEPT: GULFPORT

EQUIP. IDENT NO.: P-05
AUTH NO.: ____ PLANT: ____
BY: AR DATE: 8-3-94
APPD: ____ SHEET ____ OF ____

LOCATION

## SKETCH

## CONDITIONS

Material Pumped: WATER
P.T. = Pumping Temperature ____ °C 60 °F
gpm = Flow Rate: Normal ____ Design 25
S = Specific Gravity* 1.0 Density 8.34 lb/gal
μ = Viscosity* 1.13 Centipoise
$P_{vp}$ = Vapor Pressure* ____ mmHg ____ psia
ΔP: Control Valve ____ psi; Equip. ____ psi
Pipe (Material ____ Sch or Wall Thk 40)
Nominal Size 2" Suction 1½" Discharge
d, Actual ID, inches 2.067 Suction 1.61 Discharge
*At Pumping Temperature

## EQUIVALENT LENGTHS

Enter Type and Factor for each valve or fitting. Enter Number of each type, and line size. Multiply Factor × Size × Number and enter Feet equivalent length. See handbook for types not listed.

Factors for Valves (open) and Fittings

| | | | | | |
|---|---|---|---|---|---|
| Gate | 1.1 | Plug Valve | 1.5 | 90° l. r. or Weld ell | 1.7 |
| Globe, Lift Check | 28.0 | Butterfly (6" & up) | 1.7 | Std Tee (on run) | 1.7 |
| Wye, Angle, Diaphr | 14.0 | 90° Std Elbow | 2.5 | Std Tee (side out) | 5.0 |
| Swing Check | 11.0 | 45° Std Elbow | 1.3 | | |

| Suction Type | Factor | Nominal Size (in.) | Number | Feet | Discharge Type | Factor | Nominal Size (in.) | Number | Feet |
|---|---|---|---|---|---|---|---|---|---|
| gate | 1.1 | 2 | 1 | 2.2 | gate | 1.1 | 1½ | 3 | 4.95 |
| | | | | | EL | 2.5 | | 3 | 11.25 |
| | | | | | | | | | |
| | | | | | | | | | |
| | | | | | | | | | |
| | | | | | | | | | |
| Length of straight pipe in feet | | | | 10.0 | | | | | 25.0 |
| L = Total Equivalent Length, feet | | | | 12.2 | | | | | 41.2 |

## FRICTION HEAD LOSS

| | Suction | Discharge |
|---|---|---|
| $V = (0.408)\, gpm/d^2$, feet per second | 2.39 | 3.94 |
| Re (Reynolds Number) = $(3162)\, gpm\, S/d\mu$ | 33844 | 43451 |
| f = Friction Factor — if Re < 2100 omit this step. | .025 | .025 |
| $\Delta h$ [(Re < 2100) = $0.154\, \mu V/d^2 S$; (Re > 2100) = $18.63\, fV^2/d$] feet of fluid per 100 feet equivalent length | 1.29 | 4.49 |
| Total Friction Head Loss = $\Delta h \times L/100 \times 1.15$ (safety factor), feet of fluid | 0.2 | 2.1 |

## SUCTION AND DISCHARGE HEADS

| | Suction | Discharge |
|---|---|---|
| Vessel Pressure (psia × 2.31/S) | (+) 34 | (−) 34 |
| Liquid Level (above pump +; below pump −) | (+) 1 | |
| Static Head (above pump +; below pump −) | | (+) 16 |
| Total Friction Head Loss (Plus Velocity Head. | (−) 0.2 | (−) 2.1 |
| Control Valve (Δpsi × 2.31/S) (See Notes 1 and 2) | (−) | (−) |
| Orifice (Δpsi × 2.31/S) (See Note 2) | (−) | (−) |
| Equipment (Δpsi × 2.31/S) | (−) | (−) |
| Suction Head Sum, feet of fluid, abs. | 34.8 | |
| Discharge Head Sum, feet of fluid, abs. | | 52.1 |

## SYSTEM HORSEPOWER (estimated)

$HP = \frac{gpm \times TDH \times S}{3960 \times E(\text{Note } 3)}$

$HP = \frac{___ \times ___ \times ___}{3960 \times ___}$

HP = ____

## DYNAMIC HEAD

Discharge Head Sum 52.1
− Suction Head Sum 34.8
TDH = Total Dynamic Head, feet of fluid 17.3

## NPSH

Suction Head Sum ____
− $P_{vp}$ (mmHg × 0.045/S) or (psia × 2.31/S) ____
NPSH Available, feet of fluid, abs. ____

## PUMP SELECTION

Manufacturer ____; Model ____; Type ____;
Speed ____ rpm; Imp Size ____; HP ____; Eff ____;
GPM ____; TDH ____; NPSH ____

## NOTES

1.
2. Control valves and orifices not normally used in pump suction.
3. Use combined efficiency of pump and drive.

| REV NO. | REVISION | BY | DATE | APPD | DATE |
|---|---|---|---|---|---|
| 1 | | | | | |
| 2 | | | | | |
| 3 | | | | | |

Per_Spec.GLP
mlv.11.94

| PROJECT | COMP. BY | JOB NO. |
|---|---|---|
| | CHK. BY | DATE |

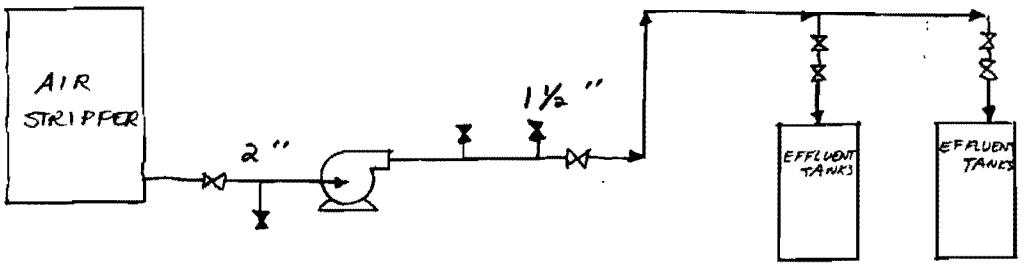


| | | FACTOR | | | FACTOR |
|---|---|---|---|---|---|
| Suction: | 1 gate | 1.1 | Discharge | 3 gates | 1.1 |