N62604.AR.000396
NCBC GULFPORT
5090.3a

WORK PLAN SITE 6 NCBC GULFPORT MS
2/15/1995
MORRISON KNUDSEN CORPORATION

WORK PLAN

SITE 6 - FIRE FIGHTING TRAINING AREA
NAVAL CONSTRUCTION BATTALION CENTER
GULFPORT, MISSISSIPPI

Revision 0
February 15, 1995

CONTRACT N62467-93-D-1106
DELIVERY ORDER 0002
STATEMENT OF WORK 001

Prepared By:

MORRISON KNUDSEN CORPORATION
2420 MALL DRIVE
CORPORATE SQUARE 1, SUITE 211
NORTH CHARLESTON, SOUTH CAROLINA 29406

APPROVALS

Mike Feindly by JEH	23 Feb. 95
MK Health and Safety Program Manager	Date
Greg Jones by JEH	23 Feb 95
MK Program Quality Manager	Date
[illegible]	23 Feb 95
MK Sr. Project Manager	Date
[illegible]	23 Feb 95
MK Program Manager	Date

ACCEPTANCE

U.S. Navy Responsible Authority	Date

WORK PLAN

SITE 6 - FIRE FIGHTING TRAINING AREA

NAVAL CONSTRUCTION BATTALION CENTER
GULFPORT, MISSISSIPPI

CONTRACT NO. N62467-93-D-1106
DELIVERY ORDER 0002
STATEMENT OF WORK #001

REVISION 0
FEBRUARY 15, 1995

Prepared For:

SOUTHERN DIVISION
NAVAL FACILITIES ENGINEERING COMMAND
P. O. Box 190010
2155 EAGLE DRIVE
CHARLESTON, SOUTH CAROLINA 29419-9010

Prepared by:

MORRISON KNUDSEN CORPORATION
2420 MALL DRIVE
CORPORATE SQUARE 1, SUITE 211
NORTH CHARLESTON, SOUTH CAROLINA 29406

TABLE OF CONTENTS

SECTION		PAGE
1.0	INTRODUCTION	1
1.1	BACKGROUND AND OBJECTIVES	1
1.2	PROJECT AND SITE DESCRIPTIONS	1
1.3	SUBSURFACE CONDITIONS	1
1.4	WORK PLAN ORGANIZATION	2
2.0	WORK APPROACH	3
2.1	METHODOLOGY	3
2.2	COMPLIANCE REQUIREMENTS	3
2.3	MOBILIZATION ACTIVITIES	4
2.3.1	Decontamination Facility	4
2.3.2	Utility Survey	4
2.4	REMOVAL OF EXISTING POLES	5
2.5	TREATMENT SYSTEM CONSTRUCTION	5
2.5.1	Equipment Pad	5
2.5.2	Treatment Equipment	6
2.5.3	Effluent Discharge	8
2.5.4	Control System	9
2.5.5	Power Supply	9
2.5.6	Fencing	11
2.6	RECOVERY TRENCH	11
2.6.1	Configuration	12
2.6.2	Excavation	12
2.6.3	Handling of Excavated Material	12
2.6.4	Backfilling	12
2.6.5	Vertical Collector Wells	13
2.6.6	Recovery Trench Cover	13
2.6.7	Vaults	14
2.7	CONVEYANCE TRENCH	15
2.7.1	Trenches	15
2.7.2	Trench Excavation	15
2.7.3	Piping	15
2.7.4	Pipe Bedding and Cover	15
2.7.5	Field Quality Control	16
2.8	MONITORING WELLS	17
2.8.1	Well Head Reconstruction	17
2.8.2	New Monitoring Well Installation	18
2.8.3	Well Collection Pumps	20
2.9	START-UP AND OPERATIONS	20
2.9.1	System Checkout and Startup	20
2.9.2	System Monitoring and Alarm	20

TABLE OF CONTENTS (Continued)

SECTION		PAGE
2.10	DECONTAMINATION ACTIVITIES	21
2.10.1	Construction and Field Equipment	21
2.10.2	Sampling Equipment	21
2.11	WASTE MANAGEMENT ACTIVITIES	21
3.0	PERMITS	24
3.1	REGULATORY PERMITS	24
3.2	EXCAVATION	24
4.0	ENVIRONMENTAL PROTECTION	25
5.0	HEALTH AND SAFETY	26
6.0	QUALITY CONTROL	27
7.0	SCHEDULE	29
8.0	ORGANIZATION/RESPONSIBILITIES	31
8.1	PROJECT MANAGER	31
8.2	SITE SAFETY AND HEALTH OFFICER	31
8.3	SITE PROJECT CONTROLS MANAGER (SPCM)	32
8.4	QUALITY CONTROL	33
9.0	REFERENCES	35

LIST OF FIGURES

FIGURE		PAGE
1	SITE LOCATION MAP	38
2	SITE MAP	39
3	REMEDIAL SYSTEM LAYOUT MAP	40
4	BLOCK PROCESS FLOW DIAGRAM	41
5	LOGIC DIAGRAM	42

LIST OF FIGURES (Continued)

FIGURE		PAGE
6	EQUIPMENT PAD LAYOUT AND SECTION	43
7	EQUIPMENT PAD DETAIL	44
8	PROCESS FLOW DIAGRAM	45
9	PROCESS AND INSTRUMENTATION DIAGRAM (Sheet 1 of 3)	46
10	PROCESS AND INSTRUMENTATION DIAGRAM (Sheet 2 of 3)	47
11	PROCESS AND INSTRUMENTATION DIAGRAM (Sheet 3 of 3)	48
12	EFFLUENT TRENCH LAYOUT AND DETAILS	49
13	RECOVERY TRENCH SECTION	50
14	RECOVERY TRENCH COVER	51
15	RECOVERY VAULT	52
16	CONVEYANCE TRENCH SECTION	53
17	EXISTING RECOVERY WELL GPT-6-RW	54
18	RECONSTRUCTED WELL HEAD DETAIL	55
19	MONITORING WELL DETAIL	56

APPENDICES

APPENDIX		PAGE
A	SAFETY AND HEALTH PLAN (Bound Separately)	A-1
B	QUALITY CONTROL PLAN (Bound Separately)	B-1
C	ENVIRONMENTAL CONDITIONS REPORT	C-1
D	ENVIRONMENTAL PROTECTION PLAN	D-1
E	WASTE MANAGEMENT PLAN	E-1
F	SUBCONTRACTING PLAN	F-1

1.0
INTRODUCTION

1.1 BACKGROUND AND OBJECTIVES

This work plan describes the remedial action activities to be undertaken at Site 6 Fire Fighting Training Area of Naval Construction Battalion Center (CBC) Gulfport, Mississippi. The work plan was prepared for review and approval of Southern Division, Naval Facilities Engineering Command (SOUTHDIV) by Morrison Knudsen Corporation (MK).

The main objective of the Fire Fighting Training Area project is to extract and treat the free product on the groundwater surface for protection of human health and the environment.

The basis of this work plan is the Site 6 Performance Specification Document (PSD) (Reference 1). MK has incorporated further details to the PSD, including Site Safety and Health (SSHP) and Quality Control (QC) plans to allow for procurement and construction of the remedial system.

1.2 PROJECT AND SITE DESCRIPTIONS

As shown on Figure 1, CBC Gulfport is located in the city of Gulfport, in Harrison County, in the southeastern corner of the State of Mississippi. CBC Gulfport supports four Naval Mobile Construction Battalions and serves as the focal point for deployment of Naval Construction Force personnel for the Atlantic Fleet battalions of the Naval Construction Force (NCF).

The project site is a former fire-fighting training area located at the corner of Fifth Street and Colby Avenue, shown on Figure 2. Fire-fighting training activities began in 1966 and ceased in 1975. At that time, there were two pits in the area and waste liquids were drained into the pits and ignited. Various liquids were suspected to be used at the site including: waste fuels, oils, solvents, paint thinners and cleaning compounds. The pits have been filled and no surface features presently depict their presence. The site has been used to train electricians on the construction and dismantlement of power lines and transformers, although this activity has ceased.

Site assessments were conducted by Harding Lawson Associates in 1987 and ABB Environmental Services in 1993 and 1994 (Reference 2). A free-phase floating product consisting of dark brown, oily liquid was encountered on the water table during the investigation by ABB Environmental Services.

1.3 SUBSURFACE CONDITIONS

Surficial soil at the site consists of topsoil and miscellaneous fill material to a depth of four feet. The fill material is underlain by tan, gray, and brown fine to medium sand

with little silt. The sand layer extends to depths ranging from 35 to 47 feet below ground surface (bgs). A saturated silty clay unit underlies the sand layer to an undetermined depth.

Groundwater elevations at the site range from 23.34 to 24.24 feet above mean sea level (msl) (about six feet bgs). Groundwater gradient is generally to the west. (Reference 2).

1.4 WORK PLAN ORGANIZATION

This work plan is organized as follows:

- Section 2 describes the approach to construct the remedial system.
- Sections 3, 4, 5 and 6 present construction prerequisites including permits, environmental protection, health and safety and quality control.
- Section 7 provides a schedule of the proposed work and Section 8 describes the project organization structure.

2.0
WORK APPROACH

2.1 METHODOLOGY

The free-phase removal action will include a pump and treat system. The free-phase product and groundwater recovery system will include a recovery trench with three collector wells. Recovered fluid will be treated through an oil-water separator and an air stripper. The effluent water will be collected in two 20,000-gallon tanks prior to discharge to the sewer system and subsequently treated at the Harrison County Publically Owned Treatment Works (POTW). The layout of the proposed remediation system is shown in Figure 3, and Figure 4 shows the block process flow diagram for the system.

The principal phases of the project include mobilization, removal of electric poles, installation of the treatment system, recovery trench excavation, conveyance piping installation, monitoring well installation and system checkout and startup. A logic diagram showing construction sequence for the project is contained in Figure 5. Each of these phases are discussed in Section 2.3 through Section 2.9 in the order of the anticipated construction sequence.

2.2 COMPLIANCE REQUIREMENTS

Various environmental regulations will impact the activities addressed in this Work Plan. These regulations include:

- Mississippi Air Regulations APC-S-2 (Reference 3),
- Mississippi Wastewater Permit Regulations Section 2(d) (Reference 4),
- Mississippi Department of Environmental Quality (MDEQ) Regulation Number PC/S-1,
- Mississippi Hazardous Waste Management Regulations (Reference 5),
- 40 CFR Part 110 *et seq.* (Reference 6), and
- 40 CFR Part 260 *et seq.* (Reference 7).

The Regulatory permits required for this project will be obtained by ABB (Reference 1).

Wastes generated by the work activities are regulated by (MDEQ) Regulation number PC/S-1 and Mississippi Hazardous Waste Management Regulations, which incorporate by reference 40 CFR Part 260 *et seq.* A detailed discussion on waste management for the project is found in the Waste Management Plan, Appendix E, of this Work Plan.

In addition, CBC Gulfport has requirements governing construction activities such as excavation, utilities clearance and hot work as described in Section 3.2.

2.3 MOBILIZATION ACTIVITIES

2.3.1 Decontamination Facility

A decontamination facility will be constructed of a high density polyethylene (HDPE) liner draped over sandbags and sloped to a sump. A single sheet of HDPE will cover the base of the decontamination facility. Containment of fluids will be provided by the construction of wood frame side walls, 15-mil liner material, and sand bags at the open ends. The liner will be visually inspected on a daily basis prior to use to detect possible failures of the liner material. This liner will be inspected:

- for evidence of tears and holes;
- for evidence of seepage;
- to ensure that the sheeting is adequately fastened to the side walls;
- to ensure that the liner adequately covers the sand bags at the end sections; and
- to ensure that generated liquids can be contained until collected for disposal.

If damaged liners are detected, they will be repaired or replaced before further use. Records will be maintained specifying decontamination facility construction materials and methods, disposition of liquids, and any repairs and/or breaches of liner integrity.

Following completion of this project, it is anticipated that the materials from the decontamination facility will be reused at another project site. If there is no indication of seepage, tears or holes, the HDPE liner will be thoroughly cleaned before being transported to another location. If other construction materials (*i.e.*, wood, 5-mil polyethylene spray shield) are not to be reused, they will be characterized and transported for disposal. When the decontamination facility is dismantled, the underlying material will be visually inspected. Visibly contaminated material will be removed and managed as a contaminated waste.

2.3.2 Utility Survey

Location and elevation of existing utilities in the area will be verified prior to start of the following work:

- Recovery trench excavation,
- Conveyance trench excavation,
- Site preparation for equipment pads, and
- Installation of piezometers.

The Resident Officer In Charge of Construction (ROICC) will be notified of any conflict with the proposed work.

2.4 REMOVAL OF EXISTING POLES

Twenty-seven existing vertical wooden poles that were used for training electricians will be removed from the site prior to any work activity. The poles are about 30 feet long and are buried about five feet into the ground. The poles will be removed by lifting them out of the ground and, if necessary, by excavating around the base. Any large chunks of soil or debris clinging to the pole will be brushed back into the hole from which the pole was removed. The portion of the pole that was in contact with soil will be decontaminated using high pressure water. The decontaminated poles will be screened with a Photo-Ionization Detector (PID) and stored on-site at an area designated by the ROICC. Any portion of the pole that cannot be decontaminated successfully (above background by PID reading), will be sawed off and kept separately for eventual disposal as debris (Appendix E).

The holes remaining after removal of the poles will be filled with top soil from the excavation for the equipment pad.

2.5 TREATMENT SYSTEM CONSTRUCTION

After the removal of the electric poles, the excavation for the equipment pad and tank pad will commence. Once the excavation is complete and the pads are constructed, the equipment will be set and electrical work completed. Disposition of excavated soil is discussed in Section 2.11 - Waste Management Activities.

2.5.1 Equipment Pad

The equipment pad will be constructed on six inches of structural fill. The structural fill will be clean sand as discussed in section 2.7.4. The structural fill will be placed and compacted to 95 percent of the maximum dry density as determined by ASTM D 698. The moisture content will not exceed plus or minus three percent of the optimum. Before placing the structural fill, existing top soil will be stripped.

The equipment pad will be a minimum of 21 feet by 21 feet by six inches thick. The pad will have a six-inch wide by nine-inch high concrete curb on all four sides. The concrete curb will be sloped on both the sides at the swing gate (See Section 2.5.6). The surface of the pad will be sloped at 1/8-inch per foot towards the back corner of the pad. A two foot by two foot by two foot deep sump will be placed at the back corner of the pad for pad drainage. The walls and floor of the sump will be six inches thick. The arrangement of the equipment and pad details are shown in Figures 6 and 7.

The equipment pad will be constructed of ready-mixed concrete meeting the requirements of ASTM C94 (Reference 8), Option C and the following:

- Specified compressions strength: 4000 psi @ 28 days
- Type I or II cement content: 565 lbs. yard, minimum
- Large aggregate (ASTM C 33) (Reference 9): 3/4 inch maximum

- Total Air content (ASTM C 173) (Reference 10): 5-8 percent by volume
- Slump: 3 to 5 inches
- Air entraining admixture: as required
- Water reducing admixture: as required
- Finish: double steel trowel

Reinforcement steel in the pad will consist of 6x6 W7.5xW7.5 welded wire fabric conforming to ASTM A 185 (Reference 11). Reinforcement steel in the sump and curb will consist of No. 5 rebar, grade 60 steel conforming to ASTM A 615 (Reference 12).

The equipment will be skid mounted and will be connected to the pad as recommended by the equipment vendor. The length of time required for the concrete to cure before installing equipment will be a minimum of seven days. Shop drawings and structural calculations will be submitted and approved by the QC Manager prior to the start of the work.

Two 20,000 gallon above ground modular storage tanks are required for the release of treated effluent to the POTW during off-peak hours (See Section 2.11.4). The storage tank compound, shown in Figure 7, will be constructed as follows:

- The storage tank locations will be stripped of topsoil to a depth of six inches. The topsoil will be stockpiled for later use.

- The storage tank bottoms inside the ringwall will be placed on six inches of structural fill. The structural fill will be placed and compacted to 95 percent of the maximum dry density as determined by ASTM D 698. The moisture content will not exceed plus or minus three percent of the optimum.

- The storage tanks will be placed on a reinforced concrete ringwall eight inches thick and two feet deep. The reinforcing will consist of No. 4 rebar, grade 60 steel conforming to ASTM A615. The concrete will conform to the requirements of ASTM C94 (Reference 8), Option C and the requirements described above.

- Effluent piping will exit the compound area prior to entering the ground. The effluent piping will be connected to an existing sanitary manhole as described in Section 2.5.3.

2.5.2 Treatment Equipment

The treatment system will include a skid mounted liquid treatment unit, a product tank and two effluent tanks. The liquid treatment unit includes three collection well pumps, an oil/water separator, an air stripper and associated pumps. The system will be controlled from a single control panel or programmable controller. The Process Flow Diagram (PFD) for the system is shown in Figure 8. The Process and Instrumentation Diagrams (P&ID) for the system are shown in Figures 9, 10 and 11. The table below contains the requirements for the basic system components.

TREATMENT SYSTEM COMPONENTS	
Equipment	**Requirements**
Oil/water separator	• Skid mounted • Material of construction compatible with petroleum products • Coalescing packing • Adjustable effluent weir • Sludge compartment • Design flow rate of 25 gpm • Transfer pump to remove separated product • Gravity flow line to air stripper
Low profile air stripper	• Skid mounted • Design flow rate of 25 gpm • Easy to remove trays or diffuser internals • Sample tap and water leg on inlet line • 0- to 10-inch direct reading magnahelic gauge on vapor space • 32°F to 120°F direct reading thermometer • Mechanical nozzles and fixtures required for future installation of vapor treatment • Demister for vapor discharge
Diffused aeration tank	• Skid mounted • Design flow rate of 25 gpm • Vapor tight, hinged lid on tank with no fittings • Easy to remove aeration diffusers • Sample tap and water leg on inlet line • 0- to 10-inch direct reading magnahelic gauge on vapor space • 32°F to 120°F direct reading thermometer • Mechanical nozzles and fixtures required for future installation of vapor treatment • Demister for vapor discharge
Air stripper blower	• Equipped with a hand switch for on, off and automatic control • High pressure shut-off switch • Adjustable air flow damper and screen on inlet • Water leg on effluent • 0- to 10-inch direct reading magnahelic gauge on outlet
Effluent and product storage tanks	• 2,000 gallon product storage tank • 20,000 gallon effluent storage tanks (2) • Level controls to prevent overfilling • Material of construction compatible with petroleum products

The oil/water separator will be skid mounted and constructed of appropriate material for handling diesel, gasoline, and chlorinated compounds. It will be equipped with coalescing packing, an adjustable effluent weir and a sludge compartment. The coalescing packing will aid in the product separation and will be easily removed for cleaning and maintenance. The oil/water separator will be vented a minimum of 12 feet above ground surface and have a capacity of 25 gpm for a combined groundwater and petroleum product stream, as shown in Figure 8, stream 1. The effluent from the

separator will contain less than 10 ppm (parts per million) of free hydrocarbons. A pump will be supplied to transfer the hydrocarbon product to the product tank. The effluent will flow by gravity to the air stripper.

The air stripper will be skid mounted and be either a low profile tray tower or diffused aeration tank. Feed to the stripper will be the 25 gpm effluent stream from the oil/water separator. Air from a blower will strip out VOCs to achieve an effluent with maximum contaminant concentrations as given in Figure 8, stream 3. The air and stripped contaminants will be vented directly to the atmosphere at a height 26 feet above grade. The expected constituent concentration of the air stream is given in Figure 8, stream 4. Expected air flow through the stripper is approximately 600 cfm. The effluent stream will be pumped to two, 20,000-gallon storage tanks prior to being discharged to the POTW.

A product tank will be installed to collect hydrocarbon product from the oil/water separator prior to disposal. The tank will be a minimum 2,000-gallon capacity and will be installed above ground. The tank and its placement must meet the American Petroleum Institute's recommended practice, Underwriters Laboratory Standard 06-142 (Reference 13), and NFPA 30 and 30A (Reference 14 and 15) recommended practice. The product tank is to be vented a minimum of 12 feet above land surface.

Two effluent storage tanks will also be installed above ground with a capacity of 20,000 gallons each. The tanks will be modular steel storage tanks with a closed top. The tank diameter will be a minimum of 15 feet and a maximum of 18 feet. The tanks will have a maximum height of 20 feet. The effluent from the air stripper will be stored in the tanks prior to being discharged to the POTW during non-peak hours. Recirculation of the effluent through the treatment system may be necessary if the effluent does not meet the POTW discharge criteria. Therefore, an effluent discharge pump, necessary piping and valves will be provided to allow recirculation of the effluent to the oil/water separator. The recirculation will be controlled by manual adjustment of valves. The product and effluent tanks will be equipped with level controls to prevent overfilling.

2.5.3 Effluent Discharge

At the design ground water recovery rate of 25 gpm, the daily treatment system contribution to the POTW will be 36,000 gallons per day. Treated effluent will be disposed through the CBC Gulfport sanitary sewer system which empties into the POTW. Since the POTW is currently operating at or above the design capacity, two 20,000-gallon storage tanks will be required to store the effluent prior to discharge to the POTW at off peak hours.

The discharge from the treatment system will be routed to the storage tanks and then routed to an existing sanitary manhole in a three-inch schedule 40 PVC pipe at a two percent minimum slope. A hole will be placed in the existing manhole and the new three-inch pipe will be placed flush with the interior of the manhole. The three-inch pipe will be grouted in place with non-shrink grout. The effluent discharge trench details are

shown in Figure 12. The pipe, bedding, cover and backfill materials and workmanship will meet the requirements of Section 2.7 - Conveyance Trench. The trench will be topped with three inches of topsoil and will be seeded and fertilized with native seed indigenous to the local climate. Field quality control, material disposal and as-built data requirements will also meet the requirements of Section 2.7 - Conveyance Trench.

2.5.4 Control System

Well pumping will be controlled based on groundwater level. Ground water in the wells will be monitored and well pumps will operate only when there is adequate fluid in the well to pump. Well pumps will be pneumatically operated. Pumps will either have internal level controls or a local controller will be located at the well head.

Product pumping from the oil/water separator will be controlled by an interface level sensor. A high level condition will start the pump and a low level condition will terminate pumping to the product tank. A high level switch in the product tank will stop the transfer pump in the event a high level condition is reached. It will also activate an alarm strobe visible to base personnel. The pump can also be controlled by a remote switch on the system control panel.

The effluent level in the air stripper sump will also be controlled by a level switch. A high level condition will start and a low level condition will stop the effluent transfer pump. A high-high level condition will shut off the collector well pumps. A high pressure situation in the effluent transfer line or a high level in the effluent tanks will also stop the effluent transfer pump and activate the alarm strobe. The pump can also be operated remotely at the control panel. Indicator lights will be provided on the control panel indicating process conditions and pump status.

The air stripper blower will be controlled by a hand switch on the control panel. A high pressure condition in the blower discharge will shut off the blower and collector well pumps and activate the alarm strobe.

Effluent flow to the POTW will be controlled by a timer and solenoid valve set to drain the tanks at the specified time. The equipment pad sump pump will operate on high level in the sump.

2.5.5 Power Supply

All electric wiring such as conduit, wire, fittings, hardware, and distribution equipment required for the electrical power and control system of the remediation system will be provided and installed. Proper installation of all wiring and wiring connections will be verified after pulling and terminating power and control wiring. All electrical wiring will be installed in accordance with the requirements of the latest edition of the National Electrical Code (NEC) (Reference 16) and any applicable local, state and federal codes and ordinances.

A 200 ampere, three phase, four wire, 208/120 volt service feeder will be run from an existing bank of transformers located on the pole. The existing pole is located east of the new treatment pad (East of Simms Avenue). The feeder will be run overhead on a new pole line from the existing power transformers on an existing pole to a new pole at the treatment pad area fence as shown in Figure 3. From the new pole at the fence, the feeder will be run in a conduit down to a watthour meter and a 200 amp, three phase, four-wire main fused disconnect switch suitable for service entrance use. All equipment and wiring provided by the station will be suitable for outdoor use with direct-exposure to rain and sleet and also suitable for Class 1, Division 2, Group D application.

The remediation system equipment components, such as the blower and pump motors, will be specified for single phase and three phase, 208-volt electrical power. Miscellaneous system control and indicating components will be specified for single phase 120-volt power. All electrical components and wiring associated with the oil/water separator, product pump and product tank will be suitable for use in Class 1, Division 1, Group D. All electrical components and wiring associated with the blower, compressor, air stripper, air stripper transfer pump, effluent tanks, sump levels and lighting/receptacle will be suitable for use in Class 1, Division 2, Group D.

The circuit breaker panel board will be suitable for outdoor use with direct exposure to rain and sleet. The panel will be suitable for 120/208 volt, three phase, four wire system. Incoming to the panel will be main lugs only. The panel will be equipped with branch circuit breakers to feed the remediation system equipment.

All wiring, (such as conduits, wire and fittings for wiring between the breaker panel and the control panels), will be provided and installed. Branch circuits will consist of copper conductor wire with type THWN insulation, sized and installed in rigid galvanized conduit per NEC. Such conduit will be routed from the circuit breaker panel to treatment equipment control panels in such a way as, to minimize interference with operation and service (maintenance) of the system equipment.

A weatherproof, 120-volt, single phase, 20 ampere, NEMA 5-20, Duplex Outlet in weatherproof outlet box with cover will be provided. It will be located at a spot convenient for plugging in electric hand tools and test equipment. 120-volt single phase high pressure sodium (HPS) lighting will be provided to give adequate lighting to inspect and operate the remediation equipment at night. Such lighting will be weatherproof and will be controlled with photoelectric cells. A weatherproof 120-volt, single phase, strobe light (Red) will be supplied and installed. An acknowledge push button will be installed which is accessible from outside of fence.

CIRCUIT BREAKER PANEL BOARD MINIMUM BRANCH CIRCUIT REQUIREMENTS		
Load Description	**Bkr Amps**	**No. Poles**
Well Pump Compressor 3 Ph, 10 Hp	60 A	3P
Air Stripper Package Main Disc, 3 Ph	80 A	3P
Product Tank/Product Pump Pkg, Main Disc, 3 Ph	60 A	3P
Oil/Water Separator-Level Controls, 1 Ph	20 A	1P
Effluent Tank Levels, pump, 3 Ph	60 A	3P
Treatment Pad Sump Level - 1 Ph	20 A	1P
Equipment Pad Area Lights - 1 Ph	20 A	1P
Convenience Outlet - 1 Ph	20 A	1P
Spare - 3 Ph	60 A	3P
Spare - 3 Ph	60 A	3P
Spare - 1 Ph	20 A	1P
Spare - 1 Ph	20 A	1P
Spare - 1 Ph	20 A	1P
Note: Circuit breaker will be GFCI type to provide protection of personnel against shocks from ground faults.		

2.5.6 Fencing

Once the equipment and associated controls and electrical components are installed, the equipment pad will be enclosed with a six-foot high chainlink fence with tan slats. The posts will be embedded in concrete to a depth of two feet. The fence will be provided with an eight-foot lockable double swing gate.

2.6 RECOVERY TRENCH

A recovery trench will be constructed to recover the free-phase product by actively depressing the ground water through pumping. Three collector wells will be installed as part of the recovery trench construction.

The recovery trench will be constructed using a one pass method, *i.e.*, starting from one end of the trench, the entire width and depth of the trench will be excavated, followed simultaneously by installation of the wells and placement of backfill material. By using this method, open trench situations will be minimized. If required, temporary sheet piles or slurry will be used to maintain the stability of the trench walls.

2.6.1 Configuration

The recovery trench will be chevron shaped with the following dimensions:

- length - 150 feet,
- width - 12 inch minimum and 30 inches maximum, and
- depth - 21 feet.

A cross-section of the recovery trench is shown in Figure 13.

2.6.2 Excavation

The excavation of the recovery trench will be performed using earth moving equipment, including a trencher, backhoe and/or clamshell. The top two feet of the trench will be excavated and stored at the site for subsequent reuse. The remaining trench will be excavated continuously to the final depth and width along the trench line in a single pass. The live load of the excavating equipment will be kept to a minimum to ensure that the stability of the trench is not adversely affected.

2.6.3 Handling of Excavated Material

One side of the recovery trench will be graded and lined with 6-mil HDPE. Excavated material will be placed on the liner to allow water to be drained towards the trench. Excavated material will then be transferred to roll-offs and subsequently disposed of as described in Appendix E - Waste Management Plan.

2.6.4 Backfilling

The quality and gradation of the recovery trench backfill material and its in-place integrity is critical to the proper operation of the recovery trench system. Backfilling will follow excavation to allow for one pass construction and to minimize the duration of unsupported trench walls. Backfill material will have the following characteristics:

- Clean sand,
- Well rounded grains,
- 90 to 95 percent quartz, and
- Coefficient of uniformity of 2.5 or less.

The gradation of the backfill material as per ASTM D 422 will be as follows:

D-Size Finer	Size Range (millimeter)	
	From	To
D_0	0.20	0.70
D_{10}	0.45	1.50
D_{30}	0.90	2.90
D_{50}	1.05	3.50
D_{60}	1.13	3.75
D_{70}	1.25	4.00
D_{90}	2.00	6.30
D_{100}	3.50	9.53

2.6.5 Vertical Collector Wells

Three vertical collector wells will be installed during construction of the recovery trench.

The casing string for the vertical collector wells will be as follows:

- Schedule 10S, type 304 stainless steel (Reference 1),
- Nominal 4 inches in diameter but no larger than 6 inches in diameter,
- Blank casing to 5 feet below land surface (bls),
- 0.020-inch wire wrap, continuous slot, well screen from 5 to 15 feet bls, and
- Tailpipe from 15 to 20 feet below bls.

The well screen will be attached to the blank casing and tailpipe by nonrestrictive (flush) threaded joints. The bottom of the tailpipe will be capped.

The collector wells will be constructed as part of one pass operation of the recovery trench. The casing string will be pre-assembled on the surface and lowered into the trench prior to backfilling. The well casing will be protected from any significant impact, deformation or abrasion. Well casings will be braced during installation so that no lateral movement occurs during subsequent backfilling.

The collector wells will be developed as described in Section 2.8.2.

2.6.6 Recovery Trench Cover

As shown in Figure 14, the recovery trench cover will consist of a PVC lateral diffusion (maintenance) pipe embedded in the filter material, an HDPE liner and top soil backfill. The lateral diffusion pipe will be one and one-half inches in diameter and screened with 20 slot (0.020 inch) openings. The diffusion pipe will be fitted with end caps inside the

vaults. The filter material, described in Section 2.6.4, will be hand tamped around the pipe.

A 30-mil HDPE liner will be placed above the lateral diffusion pipe and filter material and anchored into the surrounding soil as shown in Figure 14. A layer of common fill and top soil that had previously been excavated from the trench will be tamped in place above the HDPE liner. The area will be seeded and fertilized.

2.6.7 Vaults

The vertical collection wells will recover free product from the recovery trench. As shown in Figure 15, the vault at each well head is designed to accommodate the recovery system's piping and instrumentation while allowing ample access room for operation and maintenance. The recovery system piping includes air line, recovery line, and optional pump control line for the pneumatic pump in the well.

- A three feet by three feet by two and one-half feet deep precast concrete vault with a lockable, traffic bearing, steel cover capable of resisting The American Association of State Highway and Transportation Officials (AASHTO) H 20 (Reference 17) loading will be installed at the well head. The floor and walls of the vault will be concrete, placed to a minimum thickness of four inches. The concrete will have a minimum 28 day compressive strength of 4000 pounds per square inch.

- Openings will be made in the sides of the concrete vault for recovery, air line, controller, and diffusion/maintenance piping. Openings will also be made in the floor of the vault for the vertical collection well and drain piping.

- The vault will contain the four-inch diameter stainless steel blank well casing, a four-inch 150-pound flange with teflon gaskets, satellite controller (optional), 0.5-inch inside diameter (I.D.) product resistant flexible air hose, 0.5 to 1.0 inch I.D. product resistant flexible rubber hose, and the optional 0.25-inch outside diameter (O.D.) pump control line.

- The air hose and discharge hose will exit the vault and enter the conveyance trench (see details in Section 2.7). A 0.25-inch O.D. polyethylene pneumatic return tube will run from the well head through a one-inch schedule 40 PVC pipe and enter the conveyance trench. The pneumatic pump in the well will be suspended by a wire cable attached to a suspension bolt below the top flanges. A two-inch diameter by 12-inch long schedule 40 PVC drain pipe will extend through the concrete vault floor into the granular filter material. See Figure 15 for vault details.

2.7 CONVEYANCE TRENCH

2.7.1 Trenches

The three vertical collector wells will be connected to the treatment equipment by a trench network. Each trench will be a minimum of 24 inches wide and 24 inches deep. The trenches will consist of direct buried pipes and a soil trench cap. Trench details and cross-sections are shown in Figure 16.

2.7.2 Trench Excavation

Existing topsoil will be stripped and stockpiled for later use. The trench will be excavated to a depth of 24 inches. The excavated material will be stockpiled for use as backfill. Hand excavation will be performed in areas where trenches cross existing utilities. Where piping is installed below existing utilities, the existing utilities will be temporarily supported.

2.7.3 Piping

As shown in Figure 16, the liquid collection piping to the collector wells will be one and one-half inch diameter, threaded schedule 80 galvanized carbon steel pipe per ASTM A 53 (Reference 18). The drops to each well vault will be one and one-half inch threaded schedule 80 galvanized carbon steel pipe per ASTM A 53. The one and one-half inch pipe will be adapted to the 1/2-inch I.D. pump hoses inside the vault. The collection piping will stub up approximately one and one-half feet at the equipment pad.

The air supply piping to the collector wells will be two-inch schedule 40 PVC pipe with one-inch schedule 40 PVC drops at each vault. The one-inch pipe will be adapted to the 1/2-inch I.D. pump hoses inside the vault. PVC pipe will conform to ASTM D 1785. PVC fittings will conform to ASTM D 2466/D 2467 (Reference 19 and 20). Joints will be solvent weld conforming to ASTM D 2855 (Reference 21). All piping will be installed in accordance with ASTM D 2774 (Reference 22). The air supply piping will be stubbed up approximately one and one-half feet at the equipment pad.

The pump head controller will use 1/4 inch O.D. polyethylene air tubing for the signals to each pump control. This controller tubing will be conveyed in the trench in a two-inch schedule 40 PVC pipe with one-inch schedule 40 PVC drops to the well vaults. This controller tubing and piping is optional depending on the types of pneumatic pumps selected.

2.7.4 Pipe Bedding and Cover

A four-inch lift of sand bedding is required under the conveyance piping. The sand bedding will be compacted to 95 percent of the maximum dry density as determined by ASTM D 698 (Reference 23). The sand bedding material will be placed and compacted to one foot over the top of the pipes. The sand will be placed simultaneously on both

sides of the pipe in loose lifts not to exceed eight inches. Each lift will be tamped in, using hand operated tampers, supplemented by slicing with a shovel, to ensure all voids around the pipe have been completely filled and that the material is compacted to at least 95 percent of the maximum dry density as determined by ASTM D 698. The moisture content of the sand bedding material will not exceed plus or minus three percent of the optimum moisture content. The sand bedding material will be clean, natural, crushed, or conglomerated sand conforming to the following gradation per ASTM D 422 (Reference 24).

Sieve Opening	Percent Passing, By Weight
3/8" Square	100
No. 4	40-100
No. 100	0-15

The entire depth of the trench above the sand cover will be backfilled and compacted with common fill from the trench excavation.

The top of the conveyance trench will receive three inches of topsoil and will be seeded and fertilized with native seed indigenous to the local climate.

2.7.5 Field Quality Control

Materials and methods used in the construction of the trench collection system will be tested at the discretion of the Project Manager to verify conformance with project requirements.

All pressure piping will be tested after installation and prior to backfilling. The piping will be tested as follows:

- Contact ROICC (NTR) prior to testing

- Test piping when ambient air conditions are approximately constant. Before testing piping system, isolate instruments and controls to protect them against overpressure or contamination.

- Conduct each test at operating pressures (*i.e.*, 80 psi for PVC and five psi for galvanized steel pipe) over a period of two hours, during which time there will be no appreciable drop in pressure on the gauge. While under pressure, tap welded joints with a hammer to assist in discovering defects or lack of soundness.

- Where pressure testing with air or gas, check joints for leaks by means of soap bubble test or by using American Gas & Chemical Inc, Leak-Tec, Formula 372. Promptly repair leaks.

- Replace nonpressure parts after initial test and retest piping at operating pressure with steam, water or instrument air, as appropriate, until joints are proven tight to the satisfaction of the Project Manager.

2.8 MONITORING WELLS

2.8.1 Well Head Reconstruction

The existing recovery well GPT-6-RW, shown in Figure 17, will be cut and flush mounted to existing grade. Figure 18 shows well reconstruction details. Well reconstruction will be accomplished as follows:

- Existing steel bumper post and concrete foundations surrounding well GPT-6-RW will be removed to 12 inches below existing grade.

- The existing steel protective casing will be cut and removed to 12 inches below existing grade. The existing concrete pad surrounding the well will be removed.

- The existing stainless steel recovery well blank pipe will be cut and removed to three inches below existing grade. The top of the blank pipe will be tapped to receive a flush threaded cap. Use existing flush threaded cap if available.

- A new monitoring well cover will be installed over the existing well. The cover will be, at a minimum, 12 inches in diameter, 22-gauge steel, water resistant, with a 3/8-inch steel lid, lockable device and padlock guard. The top of the cover will be set at three inches above existing grade.

- A new concrete pad (three feet by four feet by six inches) will be placed around the well cover. The pad will be set two inches above existing grade and sloped to the top of the cover. Portland cement used for the concrete mix will conform to American Society for Testing Materials (ASTM) C 150 Type I (Reference 25). The concrete mix design will obtain a minimum 28-day compressive strength of 3000 pounds per square inch (psi) when tested by ASTM C-39.

- A well designation sign made of sheet aluminum, ASTM B 209 (Reference 26), 1/8-inch by 18 inches by six inches will be fastened to the concrete pad using anchor bolts. The sign will provide well number, date installed, name of installer, well depth, screen interval, diameter, and type of well material. The designation will be stamped into plate.

- The padlock used for the lockable cover will be brass and corrosion resistant.

- The excavated areas for guard post removal will be backfilled with common fill from an on-site borrow source. These areas will be seeded and fertilized with native seed indigenous to the local climate.

2.8.2 New Monitoring Well Installation

Four monitoring wells will be installed in locations shown on Figure 3. The monitoring wells will be screened in the unconfined aquifer consisting of fine-grained silty sand and sandy or clayey silt. The water table occurs at a depth of approximately six feet.

Prior to start of work, a temporary decontamination pad and a drum storage pad will be constructed adjacent to the site. The decontamination pad and drum storage pad will be constructed of 10-mil polyethylene and will be bermed for run-on/run-off control.

The basic components of the monitoring wells are shown on Figure 19.

The monitoring wells will be installed as per ASTM D 5092-90 and as provided below:

- A borehole will.be augured to an approximate depth of 15.5 feet below existing grade using 8-inch diameter hollow stem continuous flight auger. The drill cuttings from the augering process will be containerized in DOT 17-C open-top 55-gallon drums with sealable drum lids, labeled, and placed in a drum staging area.

- Six inches of 16/30 filter pack will be placed in the borehole. The filter pack material will be 98 percent pure silica, cleaned with potable water and have a coefficient of uniformity of at least 2.5.

- The well string consisting of, from bottom to top, a well end cap, well screen from 15 to five feet, blank casing from five feet to three inches below existing grade, and a screw cap will be placed in the borehole. The well string will consist of two-inch diameter schedule 40 PVC pipe in accordance with ASTM D 1785 (Reference 27) and ASTM F 480 (Reference 28). The well screen, with 20-slot (0.020-inch) openings, will be commercially fabricated. The slot size is large enough to maximize ground water inflow, while being small enough to prevent the entrance of sand filter pack material into the well. The well screen will be attached to the well casing and end cap by nonrestrictive threaded joints. A completed monitoring well is depicted in Figure 19.

- If necessary, stainless steel centralizers will be used to position the well string within the center of a borehole so that uniform distribution of the sand pack and annular seal around the well string is possible. Stainless steel centralizers will be placed just below the well screen and on the blank casing just above its connection with the well screen. The centralizers will be attached to the well string by stainless steel clamps.

- After placement of the well string, the remainder of the 16/30 sand pack will be installed in the well annulus from a total depth to three feet below existing grade. The sand pack prevents the sediments from collapsing against the screen and serves as a filter to prevent fine grained sediments from migrating into and plugging the well screen. The 16/30 sand is sized to be compatible with the 0.020 screen slot size and formation sediment gradation. Water addition during sand pack placement will be

monitored and removed during well development. Any added water will be from a potable source.

- Sodium bentonite will be placed as an annular seal from three feet to two feet below existing grade. The bentonite will be at least 90 percent montmorillonite clay, with a bulk density of 80 pounds per cubic foot, a specific gravity of 1.2, and a pH of 8.8 to 10.5. A water/Portland cement grout mixture, 1:3 by weight with five percent bentonite will be placed above the bentonite seal from two feet to nine inches below existing grade. The grout seal will be inspected for possible settlement 24 hours after placement. Additional grout will be added as required to backfill the annulus. The Portland cement used in the grout mix will conform to ASTM C 150 Type I.

- A monitoring well cover will be placed over the well string and on the grout. The manhole will be, at a minimum, eight inches in diameter, 22-gauge steel, water resistant with a 3/8-inch steel lid, lockable device and padlock guard. The top of the manhole will be set at 3 inches above existing grade.

- Monitoring wells will be surged with a surge block assembly or bailers, then developed by using air lift and surge techniques. Well development will not begin prior to 24 hours after installation of the annular seal. A minimum of three well volumes will be removed for development. Specific conductance, pH and temperature will be monitored during development. When these parameters have stabilized, *i.e.*, within five percent of the previous measurement, the recovery well will be considered adequately developed. These parameters will be monitored every 15 minutes during well development, and measurements will be recorded on the well development logs. Turbidity is another factor to be measured during development. The well will be developed until the water is free of visible sediment (NTU less than 10).

- The quantity of water produced during development, the development time, temperature, pH and specific conductance and equipment used will be recorded on the well development logs. Bailers and other tools used in well development will be steam cleaned between wells. The source and chemical characteristics of water that may be introduced during development will also be documented.

- Development water from each well will be placed in DOT 17-C open-top 55-gallon drums, labeled, and placed in a drum staging area prior to treatment in the groundwater treatment system.

- All augers, shovels, well development equipment, and miscellaneous drilling equipment will be decontaminated prior to moving to the next monitoring well location and after the last well is completed. All water generated in the decontamination process will be placed in a temporary storage tank prior to treatment.

2.8.3 Well Collection Pumps

Three pneumatically driven total fluids pumps will be installed in the collection wells. Each pump will be capable of drawing two to 10 gpm to maintain a constant static water level drawdown of one and one-half to five feet. The pumps will be positive displacement and top filling. Liquid level controls will be provided. The fluids stream will be pumped to the oil/water separator at an expected maximum of 25 gpm. An air compressor will be installed to provide the air supply for the pumps and associated controls.

2.9 START-UP AND OPERATIONS

2.9.1 System Checkout and Startup

The start up of the unit will be assisted by vendor representatives and proper training will be given for any persons involved in the daily operation of the system. An Operations and Maintenance (O&M) Manual which includes equipment operating manuals will be provided.

The effluent will not be discharged to the POTW until the effluent meets all performance specifications. The effluent tanks and the capability to recycle the effluent back to the air stripper inlet will facilitate start-up and testing.

The following will need to be disposed of periodically during operation of the system:

- recovered product,
- oil/water separator sludges, and
- sludges from cleaning and maintenance activities.

MK will provide O&M services for the first year of the treatment system.

2.9.2 System Monitoring and Alarm

The entire treatment system operation can be monitored at the control panel. The operation of all pumps and the blower, along with high and low liquid levels in the various liquid storage tanks, will be shown on the control panel with indicator lights. For remote observation of alarm conditions, an alarm strobe will be provided as discussed in Sections 2.5.4 and 2.5.5.

Sampling taps will be provided in the influent and effluent lines as well as the stripper exhaust air stack. Each of the influent lines from the collector wells will be provided with a sampling tap. All influent and effluent taps are to be located within the equipment pad area.

2.10 DECONTAMINATION ACTIVITIES

2.10.1 Construction and Field Equipment

Construction and field equipment that have come into contact with any potentially contaminated material will be decontaminated. After on-site removal of petroleum-impacted material, affected surfaces of the equipment will be wrapped in plastic and transported to the decontamination facility. At the decontamination facility, exposed surfaces of construction and field equipment will be decontaminated using a solution of high-pressure/low-volume water or steam with detergent. The equipment will be visually inspected for signs of contamination and screened for organic vapors with a FID or PID. If elevated levels (*i.e.*, greater than environmental background) are measured with either instrument, the cleaning procedure will be repeated until the screening criteria for cleanliness have been met. Pumping equipment and associated hoses, including vacuum truck hoses, will be flushed with water and detergent followed by a water rinse.

2.10.2 Sampling Equipment

All non-disposable equipment (*i.e.*, hand auger, steel spoons) will be decontaminated according to the procedures summarized below:

- Manual scrub with Alconox™ soap solution plus tap water wash;
- Tap water rinse;
- Distilled/Deionized water rinse;
- 10% nitric acid rinse (for metals only);
- Distilled/Deionized water rinse;
- Isopropanol or acetone rinse (for organics only); and
- Air dry.

2.11 WASTE MANAGEMENT ACTIVITIES

Waste management, including disposal functions, will be conducted in accordance with Appendix E of this document and all applicable regulations, as specified throughout this document.

The waste streams expected to be generated during construction are:

- Soils from drill cuttings and trench excavation,
- Liquids and sludges from well development and decontamination water,
- Personnel protective equipment, and
- Inert wastes or construction debris.

For each waste stream that is anticipated to be generated during construction, the approximate quantity, management, sampling and disposal is summarized in the following table.

WASTE MANAGEMENT SUMMARY				
Waste Stream	**Estimated Quantity**	**Handling and Management**	**Sampling and Analysis**	**Disposal**
Soil from drill cuttings	22 yd^3	Containerized in 55-gallon drums	Characterization testing described in Appendix E	Off-site sanitary landfill
Soil from trench excavation	300 yd^3	Temporarily stockpiled on polyethylene, then containerized in 20 or 40 cubic yard roll-offs	Field and characterization testing described in Appendix E	Off-site sanitary landfill
Ground water from well development	150 gal.	Containerized in 55-gallon drums	None	Treat in remediation system and discharge to POTW
Decontamination water	600 gal.	Temporary storage in a tank, then transferred to the oil/water separator for treatment	None	Treat in remediation system and discharge to POTW
Personal protective equipment	Unknown	Containerized in plastic lined 55-gallon drums	None	Off-site sanitary landfill
Inert waste - construction debris	Unknown	Containerized in 20 or 40 cubic yard roll-offs	Characterization testing described in Appendix E	Off-site sanitary landfill

Drums containing potentially contaminated material will be segregated from the drums containing uncontaminated materials. The drums will be staged away from the traffic flow of the construction area. The roll-offs containing potentially contaminated material will also be segregated from those containing uncontaminated materials. Like the staged drums, all roll-offs will be kept away from the traffic flow of the base vehicles and construction area.

Containerized solid wastes will be transported off-site for ultimate disposal in a local sanitary landfill. Containerized liquid wastes will be transferred to the ground water treatment system once it is operating. The liquids will be introduced to the treatment system through the oil/water separator. The drums will be rinsed and decontaminated with potable water, which will then be introduced to the oil/water separator for treatment by the system and discharge to the POTW.

Excavated soil from trenching operations will be temporarily stockpiled on 6-mil polyethylene for drainage of excess water or free product. The polyethylene covered drainage area will be bermed and sloped toward the trench to control run-on, run-off and drainage of the excavated soil.

Wastes generated during operation of the system are recovered free product, ground water (liquid), oil and water separator sludges, and air streams. Treatment and disposal of these waste streams will be addressed in the Operations and Maintenance Manual; therefore, management of these waste streams are not addressed in this work plan.

3.0
PERMITS

3.1 REGULATORY PERMITS

Regulatory permits for this project, including applications for air and water discharges, will be prepared and submitted by ABB.

3.2 EXCAVATION

An excavation permit must be obtained prior to any digging, drilling or trenching at Site 6. Specific trenching, drilling and digging locations need to be provided to the CBC Public Works Department to obtain the necessary utility clearances. The permit is valid for 90 days from the date of issue. If the work extends for more than 90 days, the permit will need to be extended or reissued.

4.0
ENVIRONMENTAL PROTECTION

To ensure protection of worker safety and the environment throughout the project, the MK Project Manager, or his representative, will complete the following reports as required:

- Daily Construction Report
- Daily Quality Control Report
- Daily/Weekly Safety Report in Safety Plan
- Completion Report

Details of each required report can be found in other attachments to the Work Plan, specifically the Quality Control Plan in Appendix B.

The only area of environmental concern are the storm water ditches located near the work area. Spill prevention measures will be implemented throughout the life of the project. These spill prevention measures will be consistent with those currently in place at the CBC. In the event there is an accidental release during the course of the project that reaches the storm water ditches, efforts will be made to contain the liquid in the ditch using earthen or other man-made dams.

5.0
HEALTH AND SAFETY

A Site Safety and Health Plan (SSHP), which constitutes Appendix A of this document, is bound separately. All details described in the Site Safety and Health Plan are to be strictly adhered to during the course of the work.

Overall, the potential risk of acute exposure to the chemical contaminants listed in Table 2-1 of the SSHP is considered low. The highest hazard risk chemical contaminants are benzene, 1,1-dichloroethane, 1,2-dichloroethane, 1,1-dichloroethylene, and trichloroethylene. Based on the concentrations of these compounds likely to be encountered in the soil and/or groundwater, vapor concentrations are not likely to exist greater than the Permissible Exposure Limit (PEL). However, breathing-zone concentrations could be significant if dust control methods (engineering control) used during movement of the soil are not adequate. Approximate three-foot excavations for piping and utilities, and penetrations for well installations should produce breathing zone concentrations significantly less than the action levels. Direct reading instrumentation will be used to monitor the immediate atmosphere and upgrades to personal protective equipment (PPE) will be required if necessary.

Soil contamination encountered during excavation and drilling will potentially produce organic vapors; however, concentrations should be significantly lower than action levels. Again, based on concentrations expected in the soil and the contaminants vapor pressure, PEL levels should not be reached.

The most significant hazards at this project are construction safety hazards associated with heavy equipment, such as soil excavation and penetrations with potential contact with underground utilities; walking and working surfaces; traffic control and eye/head/feet hazards. Other concerns include energy control (electrical and other kinetic energy sources), and contact with overhead electrical lines. Heat stress is also a potential concern, especially when non-pervious PPE is required.

Minimum worker protection will be Level D PPE, as listed in Table 6-1 of the SSHP. Dress will be upgraded when conditions warrant, or as directed by the Site Safety and Health Officer (SSHO).

Activity hazard analyses have been prepared for each anticipated task in accordance with EM 385-1-1, October 1992. These hazard analyses are contained in Appendix A of this SSHP. Each site activity must be reviewed by supervision as part of the Pre Entry Briefs prior to start to determine if the prepared hazard analysis adequately addresses the planned activity. If it is found the hazard analysis is not adequate, additional hazard analysis will be prepared as needed. Plan of the Day, Pre-Entry and Post-Entry Briefings will be conducted with all affected workers.

6.0
QUALITY CONTROL

As the prime contractor, MK implements and retains full authority for the Quality Control Program. All matters involving Quality Control performed in the execution of SOUTHDIV ERAC Delivery Orders are managed by MK. This approach provides the Navy with a quality management system that has clear lines of authority and responsibility with a consistent approach and application of quality requirements.

The Quality Control Plan (QCP), included as Appendix B and bound under a separate cover, identifies Quality testing and inspection requirements for the scope of work to be performed. At the heart of the QCP is the *Testing Plan and Log*, which lists required tests and inspections for each definable feature of work. The Site QC Supervisor ensures that all tests and inspections are performed to the standards specified and at the required frequencies. Results of these tests and inspections are documented on the *Testing Plan and Log*. The Program QC Manager is the primary point of contact with the Navy Contracting Officer for quality matters, and is based in the MK Program Management Office in North Charleston, SC.

The QC Manager is responsible for implementing the Three Phases of Control during construction activities to ensure that work complies with contract requirements. The Three Phases of Control are performed to fully and adequately encompass both site and off-site work. The Three Phases of Control are performed for each definable feature of work delineated in the project-specific QC Plan. The Three Phases of Control consist of a Preparatory Phase, Initial Phase and Follow-up Phase, described briefly below and detailed in the project QCP.

The Contracting Officer is notified at least two working days in advance of each preparatory phase. The preparatory phase is conducted with the superintendent and the foreman responsible for the definable feature of work. Results of the preparatory phase actions are documented in the daily Contractor quality control report. The following activities are performed prior to beginning each definable feature of work:

- Review each paragraph of the applicable specification sections and the contract drawings;
- Verify that appropriate shop drawings and submittals for materials and equipment have been submitted and approved;
- Verify receipt of approved factory test results, when required;
- Review the testing plan and ensure that provisions have been made to provide the required QC testing;
- Examine the work area to ensure that the required preliminary work has been completed;
- Examine the required materials and equipment, and sample work to ensure that materials and equipment are on hand and conform to the approved shop drawings and submitted data;

- Review the Safety Plan and appropriate activity hazard analysis to ensure that applicable safety requirements are met, and that required material safety data sheets (MSDS) are submitted; and
- Discuss construction methods.

The Contracting Officer is notified at least two working days in advance of each initial phase. When crews are ready to start work on a definable feature of work, the initial phase is conducted with the personnel responsible for that definable feature of work to ensure that the work complies with contract requirements. The results of the initial phase are documented in the daily Contractor Quality Control Report. The initial phase is repeated for each new crew to work on-site, or when acceptable levels of specified quality are not being met. The following is performed for each definable feature of work:

- Establish the quality of workmanship required;
- Resolve conflicts;
- Review the Safety Plan and the appropriate activity hazard analysis to ensure that applicable safety requirements are met; and,
- Ensure that testing is performed.

The following is performed daily as the follow-up phase for on-going work, or more frequently, as necessary, until the completion of each definable feature of work. The results of the follow-up phase are documented in the daily Contractor Quality Control Report:

- Ensure the work is in compliance with contract requirements;
- Maintain the quality of workmanship required;
- Ensure that testing is performed; and,
- Ensure that rework items are being corrected.

A Quality Assurance Project Plan (QAPP) is used to describe the policies, organization, objectives, functional activities and specific quality assurance (QA) and quality control (QC) activities to ensure the validity of analytical data generated during project execution. The purpose of the plan is to ensure that all technical data generated are accurate, representative and, if necessary, will ultimately withstand judicial scrutiny.

QC consists of a system of checks on field sampling and laboratory analysis (through the use of field blanks, duplicates, documentation of all sample movement, chain of custody records, etc.) to provide supporting information on the methods employed to ensure quality analytical data. QA consists of overview checking to certify that the QC procedures have been properly implemented to produce accurate data. QA is generally a supervisory and peer review oversight function (Reference 29)

There is no environmental media sampling associated with this Work Plan, therefore a QAPP is not necessary for this project.

7.0
SCHEDULE

A construction schedule for the project is shown on the following page. Site work is expected to begin by April 13, 1995 and treatment system debug completed by June 14, 1995.

Milestones for the project are as follows:

Mobilization	12 April 1995
Construction Complete	24 May 1995
System Debug & Startup Complete	14 June 1995
Construction Completion Report	13 July 1995

ORIG DUR	EARLY START	EARLY FINISH	WBS	
				MOBILIZATION
0	13APR95	12APR95		MOBILIZATION COMPLETE
3	13APR95	17APR95	01.04.05	INSTALL DECONTAMINATION PAD
3	13APR95	17APR95		SITE & UTILITY SURVEY
				TREATMENT
1	13APR95	13APR95	03.04.04	EXCAVATE EQUIP.PAD/DISPOSE OF SOIL
1	14APR95	14APR95	03.04.04	EXCAVATE TANK PAD/DISPOSE OF SOIL
4	14APR95	19APR95	03.04.04	FORM/REBAR/POUR EQUIP.PAD
4	17APR95	20APR95	03.04.04	FORM/REBAR/POUR TANK PAD
10	20APR95	3MAY95	13.07.02	SET TREATMENT EQUIP.
2	2MAY95	3MAY95	06.07.01	SET TANK
5	4MAY95	10MAY95	06.02.11	INSTALL ELECTRICAL
				TRENCH/PIPING
10	4MAY95	17MAY95	06.02.01	TRENCH/INSTALL RISERS/BACKFILL
10	11MAY95	24MAY95	06.07.03	INSTALL PIPING
1	18MAY95	18MAY95	19.02.01	DISPOSE OF SOIL
3	18MAY95	22MAY95	06.02.04	INSTALL PERFORATED PIPE
				MONITORING WELLS
3	11MAY95	15MAY95	02.04.02	DRILL MONITORING WELLS (4)
1	16MAY95	16MAY95	02.04.02	INSTALL PIEZOMETERS
				ELECTRIC POLES
3	13APR95	17APR95	03.01.00	REMOVE ELECTRIC POLES (27)
2	18APR95	19APR95	03.01.00	DECONTAMINATE POLES
1	20APR95	20APR95	03.01.00	DISPOSE OF POLES
				COMPLETION
0	25MAY95	24MAY95		CONSTRUCTION COMPLETE
15	25MAY95	14JUN95	13.07.02	SYSTEM DEBUG & STARTUP
0	15JUN95	14JUN95		FIELD COMPLETE
0	14JUL95	13JUL95		COMPLETION REPORT

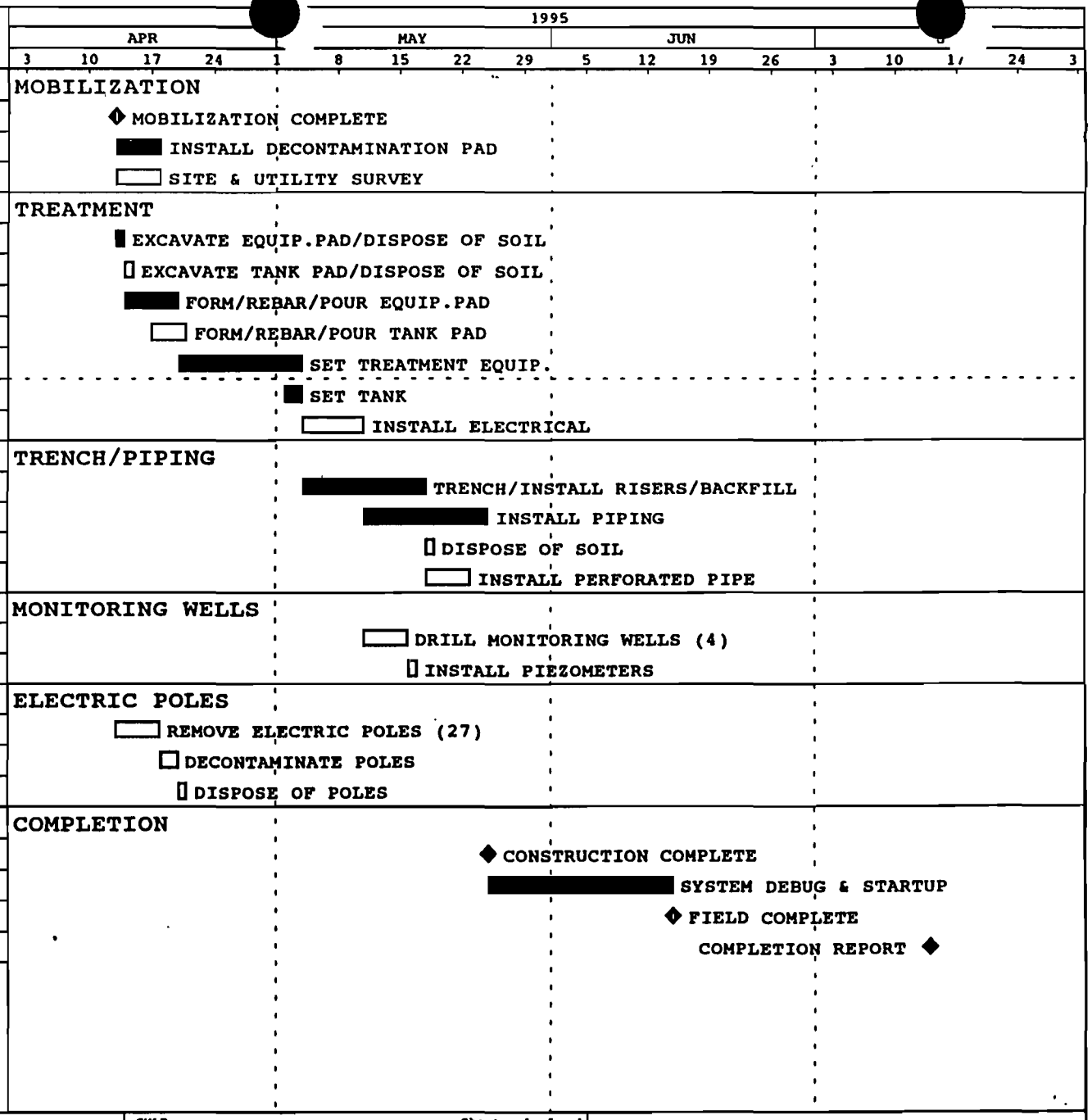

Plot Date 12DEC94
Data Date 1JAN95
Project Start 15NOV94
Project Finish 13JUL95

Activity Bar/Early Dates
Critical Activity
Progress Bar
Milestone/Flag Activity

(c) Primavera Systems, Inc.

GULF

Sheet 1 of 1

DO #0002 SOW #001 Phase 3
NCBC Gulfport, Mississippi
SOUTHDIV ERAC Program

Morrison Knudsen

Date	Revision	Checked	Approved

8.0
ORGANIZATION/RESPONSIBILITIES

8.1 PROJECT MANAGER

The Project Manager (PM) has the overall responsibility for the implementation of this Work Plan, as well as all other project activities. The PM will report to the designated SOUTHDIV representative for all project-related issues. He will report to the MK Program Management Office in North Charleston, South Carolina, for project oversight, management direction, and resolution of any company-related matters. The PM will control all on-site professional, technical, and labor forces to ensure the adequate and timely completion of planned project tasks. Assisted by both on and off-site resources, the PM will assure the following:

- maintenance of a single point of contact for SouthDiv liaison on all project-related schedule, cost, safety, and technical matters, including any communications, meetings, or updates;

- coordination of the project resources to assure that adequate safety and industrial hygiene controls are enforced to ensure safe and efficient conduct of project operations in compliance with the appropriate plans, procedures, and regulatory requirements;

- provision of sufficient resources to support the successful completion of the Work Plan and other project tasks; and

- maintenance of all appropriate project data, documents, and records, as well as the compilation of a final report which accurately reflects the work performed.

8.2 SITE SAFETY AND HEALTH OFFICER

The Site Safety and Health Officer (SSHO) will report directly to the on-site PM and the MK SouthDiv Health and Safety Manager to ensure that the technical aspects of the project are in compliance with all plans, procedures, and regulatory requirements. Specific responsibilities include:

- make recommendations, if necessary, to the PM for the control and elimination of existing and potential industrial hazards;

- oversee the bioassay (if necessary) and sampling program to ensure proper monitoring of internal and external exposures;

- assist, if necessary, in training of individuals in the biological effects of hazards, as needed;

- perform a technical review of the data and final report which declares that the project site (or areas within the project site) may be released for use with no monitoring restrictions;

- develop and implement a site specific safety and health plan, and ensure that all project employees, subcontractors, and visitors understand the safety and health plan;

- conduct appropriate surveys and inspections to ensure that all industrial safety and hygiene hazards are appropriately identified, and assure that necessary precautions are in place prior to the initiation of work activities;

- specify appropriate industrial hygiene and safety controls for work permits (e.g., work permits);

- select instrumentation, personal protective equipment, and work techniques appropriate for the protection of project personnel, the public, and the environment;

- review and maintain all appropriate project personnel records, including survey data; training, certification, and qualification records; industrial hygiene, and safety surveys; and permits, licenses, and instrument records;

- maintain industrial hygiene, safety supplies and instrument inventories;

- inspect and assist in the preparation of waste materials for shipment;

- stop work when necessary to maintain a safe industrial work area;

- implement, enforce, and adhere to any work permit requirements in areas under their control; and

- act under the direction of the PM to conduct all required monitoring surveys and other project tasks.

8.3 SITE PROJECT CONTROLS MANAGER (SPCM)

The Project Controls Manager reports to the Project Engineer and has primary responsibility for the maintenance of the Contract Manager System of cost and schedule controls, including regular assessments of performance. The SPCM's responsibilities include:

- providing administrative support services for projects;

- evaluating cost of time data and organizing information in a standard format;

- preparation of monthly progress reports;

- reviewing of all cost/schedule reports, including subcontractors;
- recommendations of corrective actions to the Program Manager;
- providing maintenance of the document control system; and
- maintaining project man-day total and contract change notice log.

8.4 QUALITY CONTROL

- reports to the on site PM and the Southdiv Quality Control Manager for project activities and daily project updates;
- coordinates with procurement, expediting, and planning and scheduling departments;
- performs QC inspections as delineated in the QC Plan; and
- is assisted by all engineering personnel as necessary.

ORGANIZATIONAL CHART

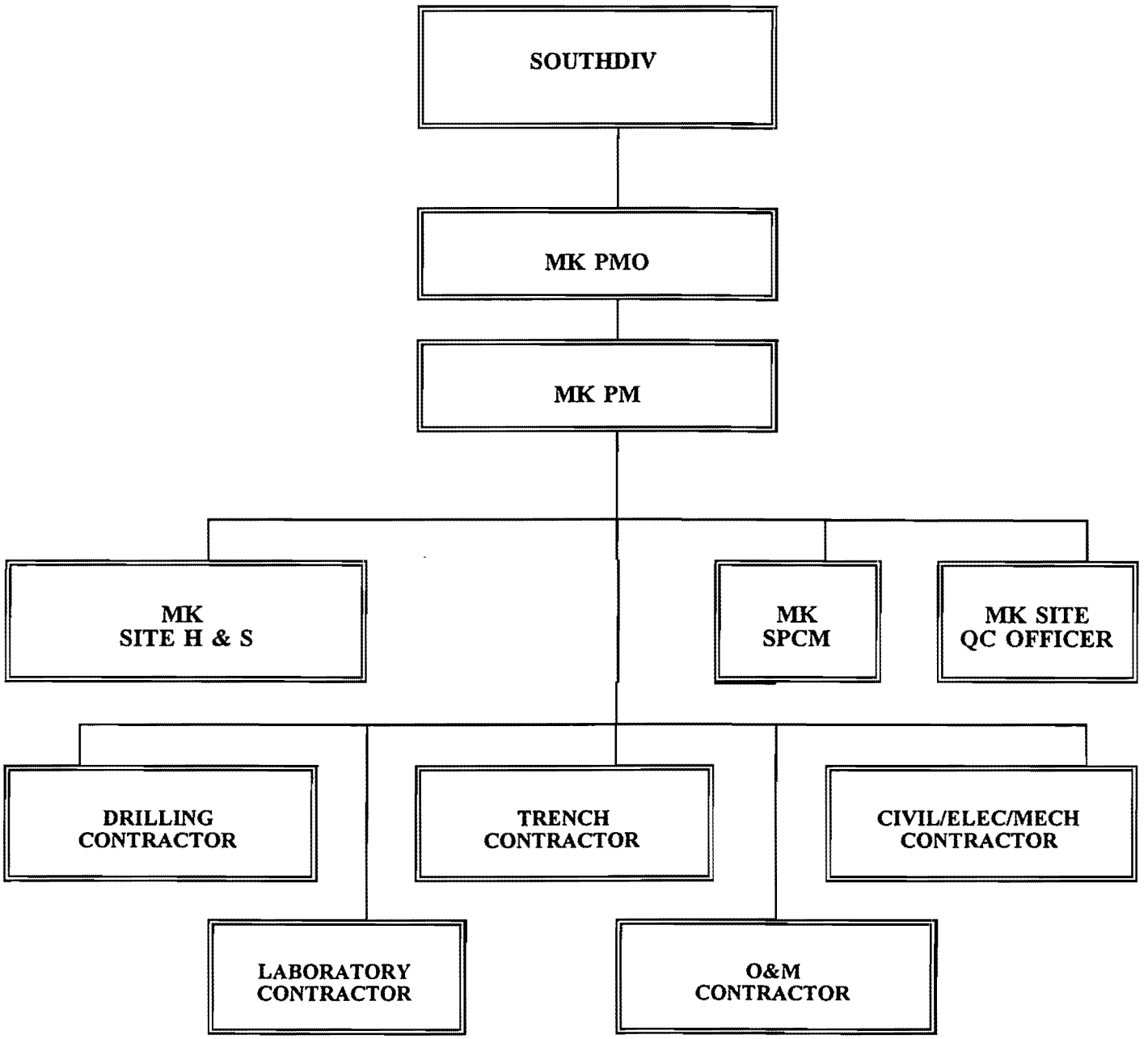

9.0
REFERENCES

1. "Performance Specification, Site 6, Fire-Fighting Training Area, Naval Construction Battalion Center Gulfport, Gulfport, Mississippi." ABB Environmental Services (Under Preparation).

2. "Free-Phase Product Assessment Report, Site 6, Fire Fighting Training Area, Naval Construction Battalion Center, Gulfport, Mississippi." ABB Environmental Services, July, 1994.

3. Permit Regulation for the Construction and/or Operation of Air Emissions Equipment. Regulation APC-5-2, Amended December 9, 1993.

4. Wastewater Regulation for the National Pollutant Discharge Elimination System (NPDES) Permits, Underground Injection Control (VOC) Permits, state Permits, Water Quality Based Effluent Limits and Water Quality Certification, Promulgated February 11, 1982, Last Amended June 28, 1992.

5. Mississippi Hazardous Waste Management Regulations, Promulgated October 1, 1993.

6. Code of Federal Regulations, Title 40, Part 110, Discharge of Oil, April 2, 1987, Revised through July 1, 1991.

7. Code of Federal Regulation, Title 40, Part 260, Hazardous Waste Management System: General, May 19, 1980 Revised through July 1, 1992.

8. ASTM (American Society for Testing and Materials) C 94 - Specification for Ready - Mixed Concrete. Vol 04.02.

9. ASTM C 33 - Specification for Concrete Aggregates. Vol 04.02

10. ASTM C 173 - Test Method for Air Content of freshly Mixed Concrete by Volumetric Method. Vol 04.02

11. ASTM A 185 - Specification for Steel Welded Wire, Fabric, Plain, for Concrete Reinforcement. Vol 01.04.

12. ASTM A 615 - Specification for Reformed and Plain Billet - Steel Bars for Concrete Reinforcement. Vol.01.04.

13. Underwriters Laboratory Standards 06-142, Steel Aboveground Tanks for Flammable and Combustible Liquids, 1993.

14. National Fire Protection Association, Chapter 30, Flammable and Combustible Liquids Code, 1993.

15. National Fire Protection Association, Chapter 30A, Automotive and Marine Service Station Code, 1993.

16. "National Electrical Code, 1993", ANSI/NFPA 70.

17. AASHTO H 20 - Manual for Highway Construction (Latest Edition).

18. ASTM A 53 Specification for Pipe, Steel, Block and Hot-Dipped, Zinc-Coated Welded and Seamless. Vol 01.01.

19. ASTM D 2466 - Specification for Poly (Vinyl Chloride) (PVC) Plastic Pipe Fittings. Schedule 40. Vol 08.04.

20. ASTM D 2467 - Specification for Socket-Type Poly (Vinyl Chloride)(PVC) Plastic Pipe Fittings, Schedule 80. Vol 08.04.

21. ASTM D 2855 - Practice for Making Solvent. Cemented Joints with Poly (Vinyl Chloride)(PVC) Pipe and Fittings. Vol 08.04.

22. ASTM D 2774 - Practice for Underground Installation of Thermoplastic Pressure Piping. Vol 08.04.

23. ASTM D 698 - Test Method for Laboratory Compaction Characteristics of Soil Using Standard Effort (12,400 ft.1bf/Ft^3) (600 kN-m/m^3). Vol 04.08.

24. ASTM D 422 - Method for Particle Analysis of Soils. Vol 04.08.

25. ASTM C 150 - Specification for Portland Cement, Vol.4.02.

26. ASTM B 209 - Specification for Aluminum and Aluminum - Alloy Sheet and Plate. Vol.2.02.

27. ASTM D 1785 - Specification for Poly (Vinyl Chloride)(PVC) Plastic Pipe, Schedules 40,40, and 120. Vol 08.04.

28. ASTM F 480 - Specification for Thermoplastic Water Well Casing Pipe and Couplings made in Standard Division Ratios (SDR) SCH40 and SCH80. Vol 08.04.

29. Navy/Marine Corps Installation Restoration Manual, February 1992.

FIGURES

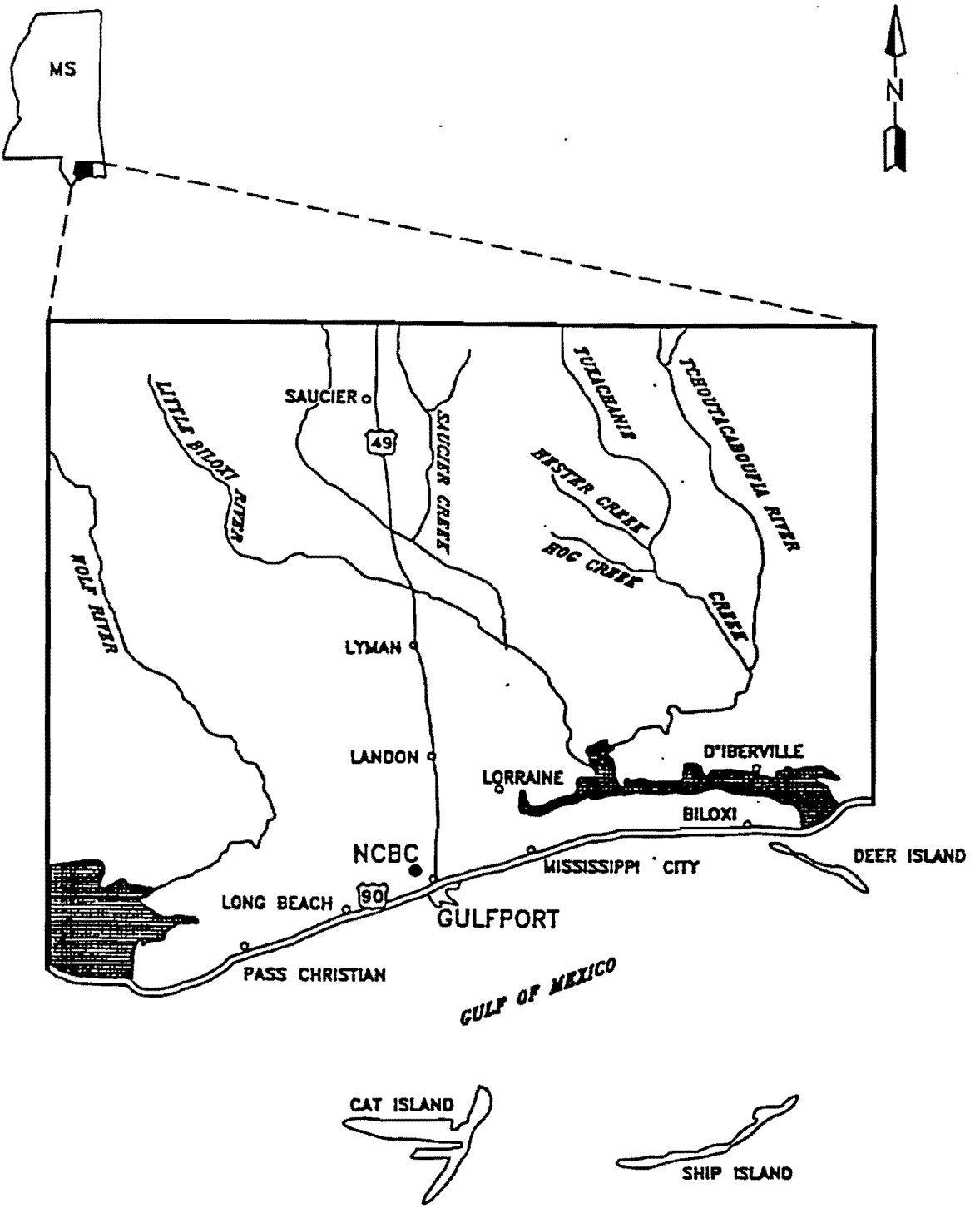

FIGURE 1
SITE LOCATION MAP

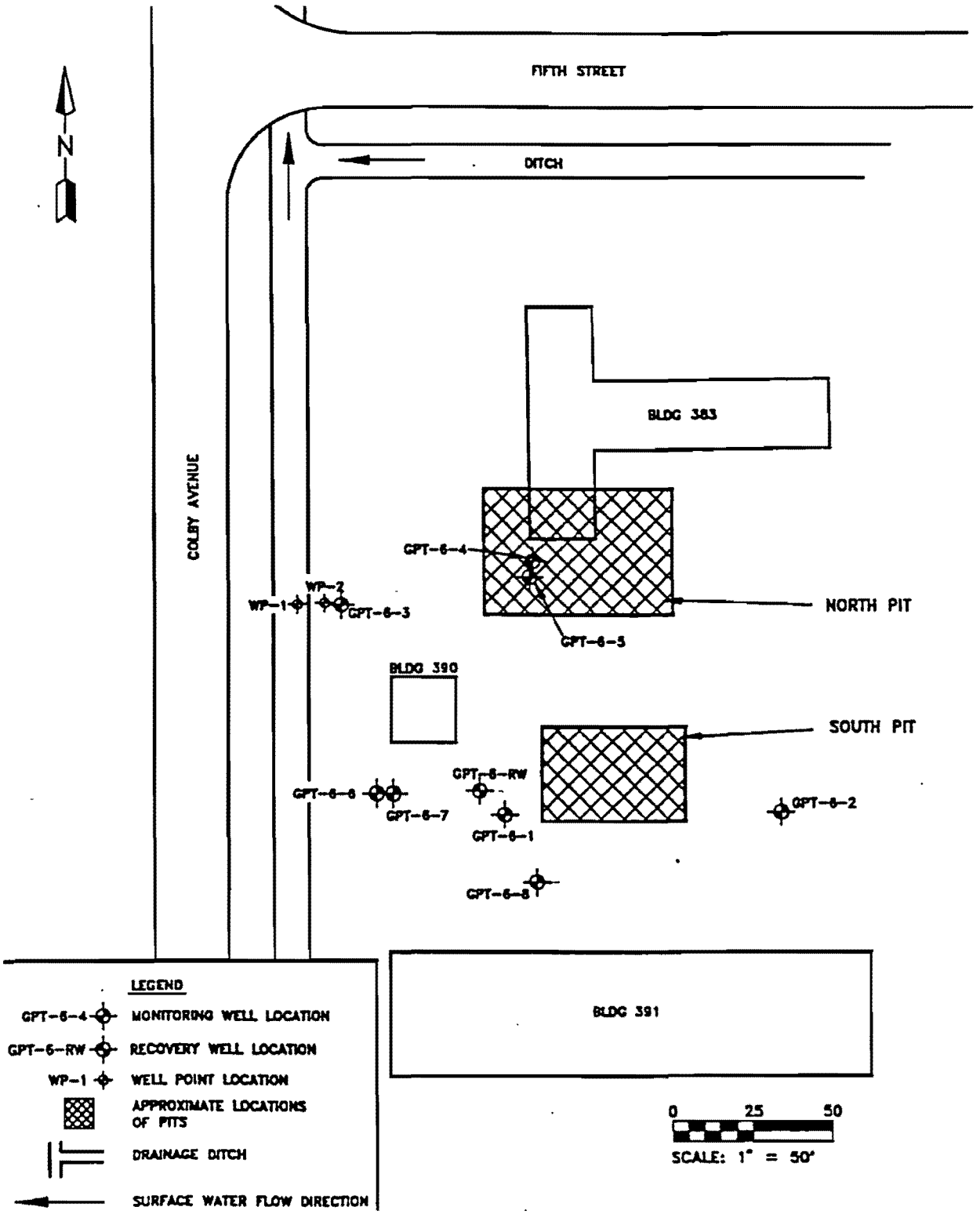

FIGURE 2
SITE MAP

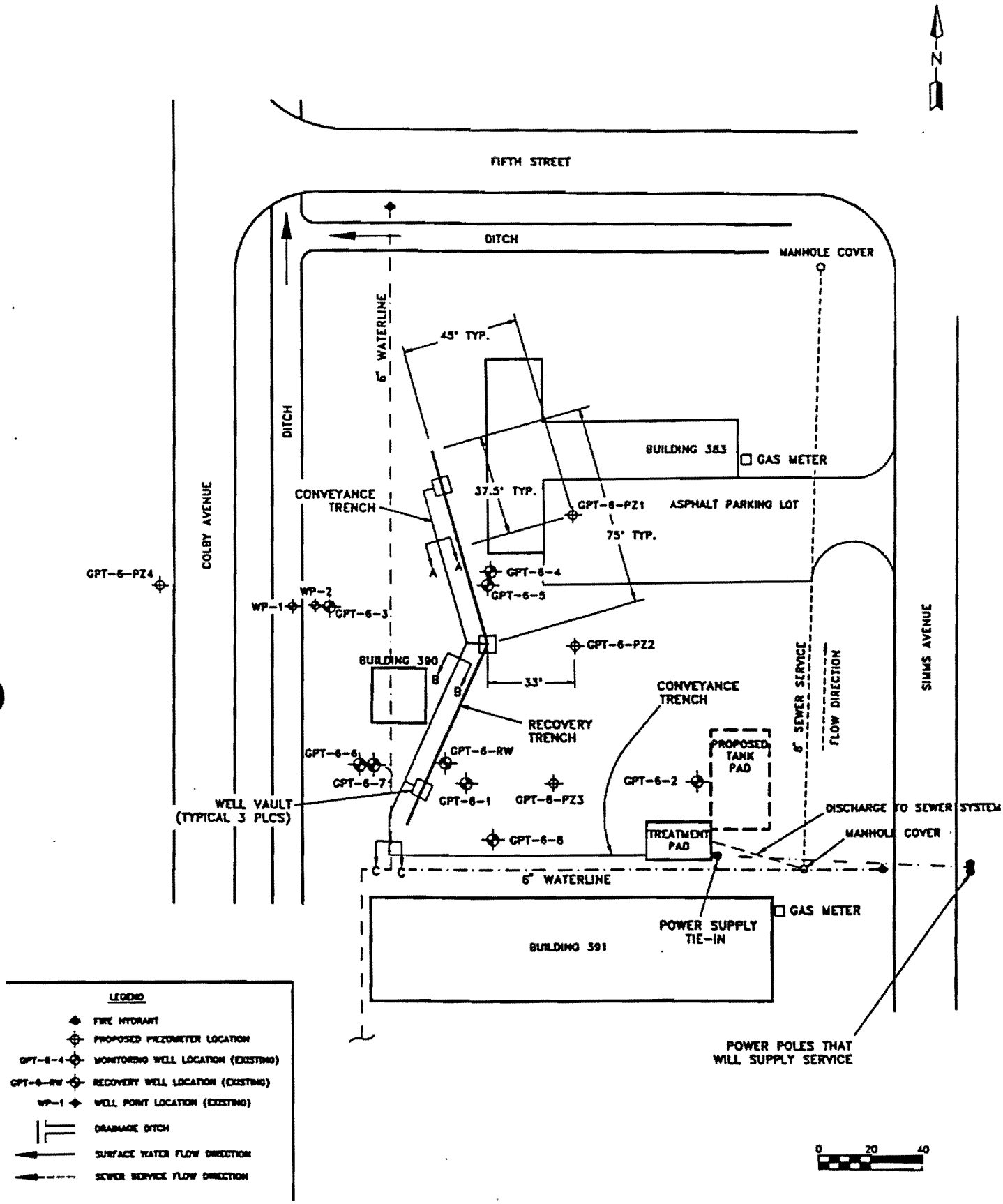

FIGURE 3
REMEDIAL SYSTEM LAYOUT MAP

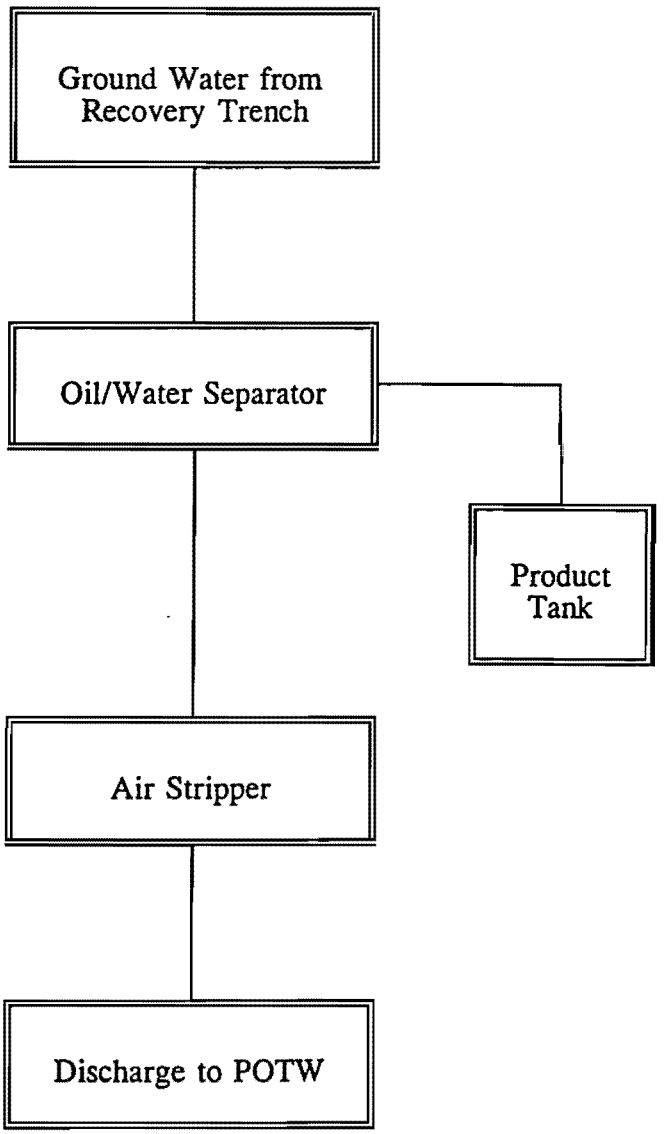

FIGURE 4
BLOCK PROCESS FLOW DIAGRAM

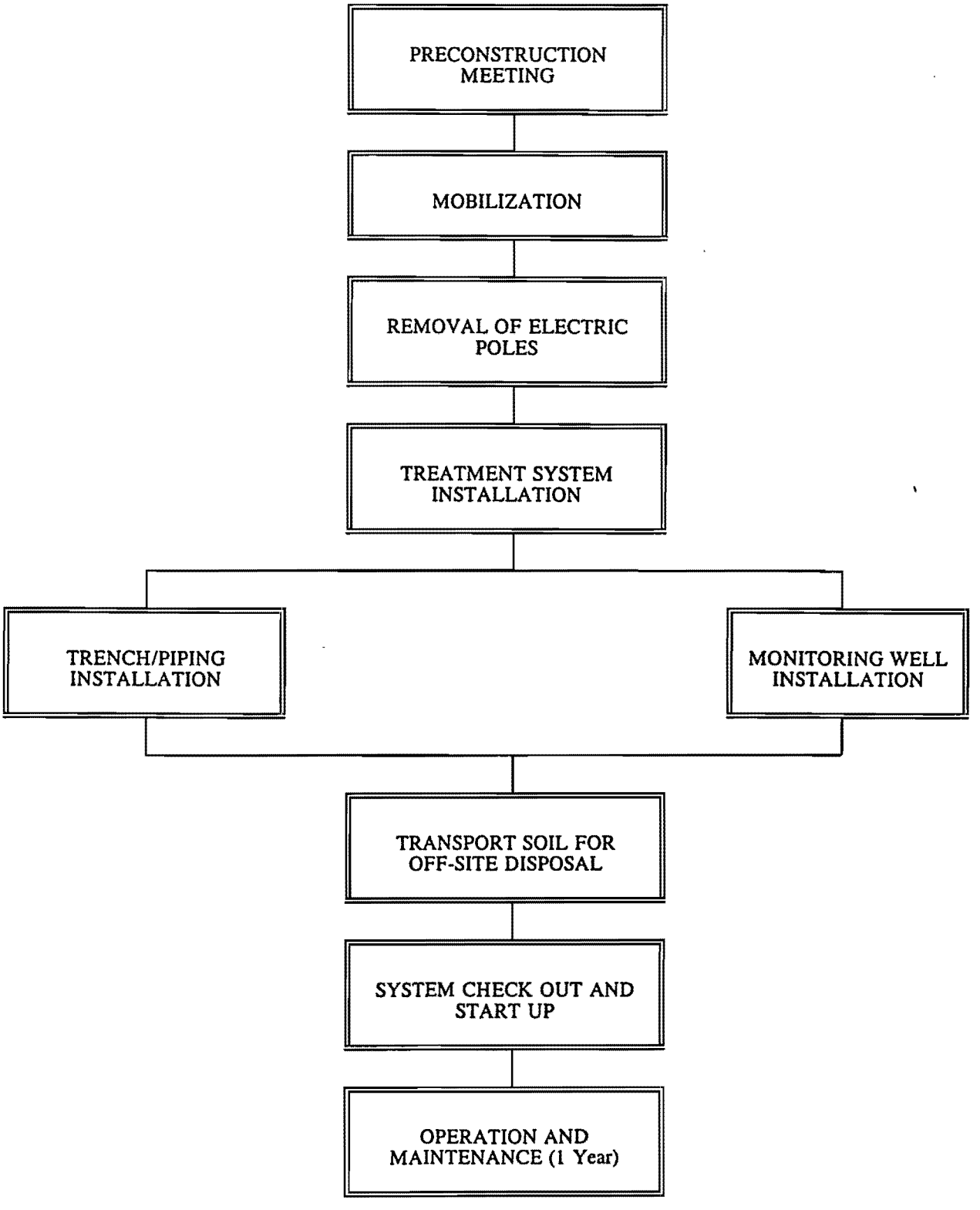

FIGURE 5
LOGIC DIAGRAM

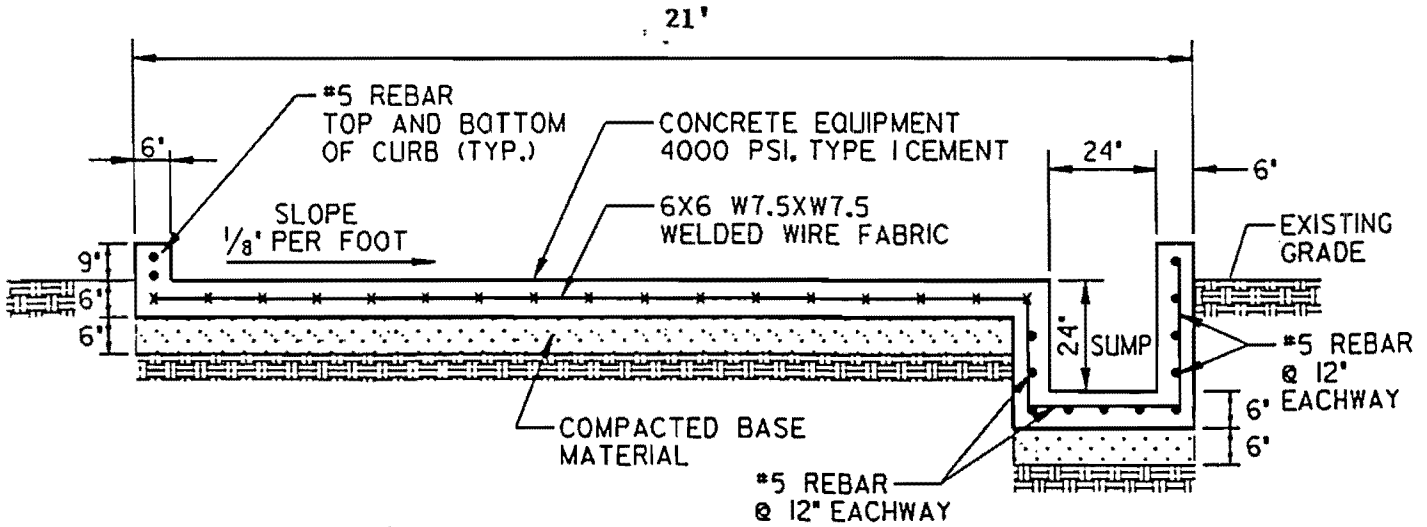

NOTES:

1. #5 REINFORCING BARS SHALL BE CAPPED A MINIMUM OF 1'-6".
2. WIRE MESH SHALL BE LAPPED A MINIMUM OF 1'-0".

SECTION A-A

NOT TO SCALE

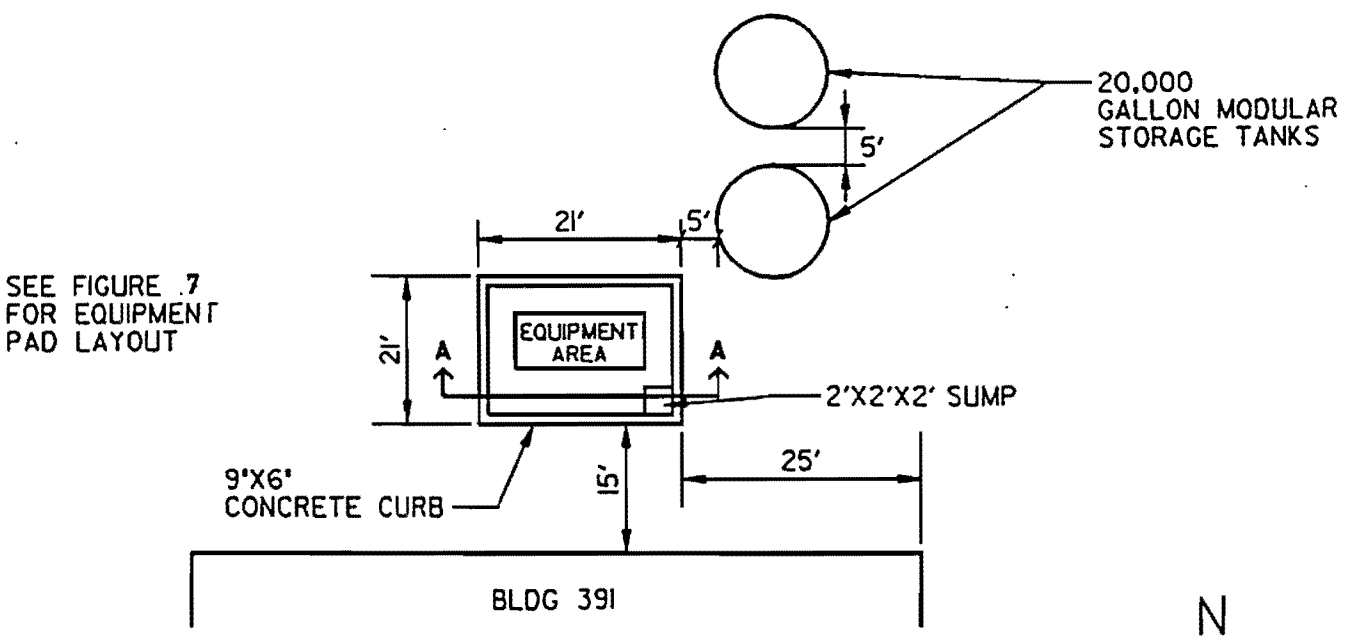

EQUIPMENT PAD LAYOUT PLAN

NOT TO SCALE

FIGURE 6
EQUIPMENT PAD LAYOUT AND SECTION

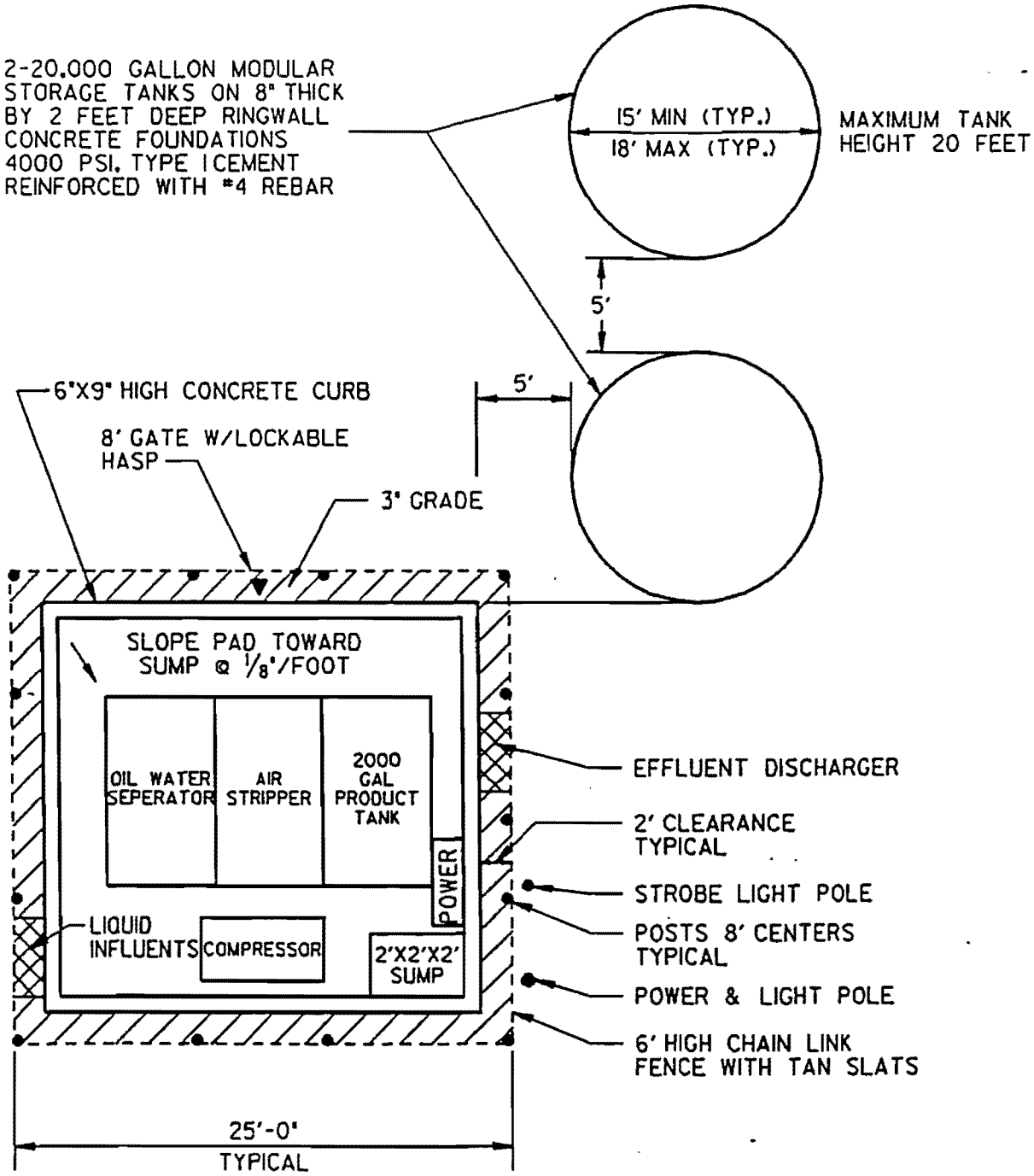

EQUIPMENT PAD DETAIL

NOT TO SCALE

FIGURE 7
EQUIPMENT PAD DETAIL

FLOW STREAM	1	2	3	3	4	5	6
	RECOVERED STREAM	GROUNDWATER	EFFLUENT	EFFLUENT	VAPOR (4) DISCHARGE	AIR (NOTE 5)	PRODUCT
Flow (gpm)	25	25	25				<0.1
Water	25	25	25				
Product	<0.1						<0.1
Air (cfm)						600	
COMPOUND (ug/L)	(ug/L)	(ug/L)	(ug/L)	(lb/hr)	(lb/hr)		
Benzene	83	83	<5		0.00104		
2-Butanone	80	80			0.00100		
Carbon Disulfide	4	4					
Chloroethane	310	310			0.0038		
Chloroform	70	70	<100		0.00015		
Chloromethane	12	12			0.00012		
1,1-Dichloroethane	4900	4900			0.06133		
1,2-Dichloroethane	1200	1200			0.01502		
1,1-Dichloroethene	3100	3100	<7		0.03880		
1,2-Dichloroethene (total)	170	170			0.00213		
cis-1,2-Dichloroethene			<70				
trans-1,2-Dichloroethene			<100				
Ethylbenzene	77	77	<700		0.00096		
Methylene Chloride	93	93	<5		0.00116		
4-Methyl-2-Pentanone	100	100			0.00125		
Tetrachloroethene	32	32	<5		0.00040		
1,1,1 Trichloroethane	5900	5900	<200		0.07383		
Trichloroethene	90	90	<5		0.00113		
Toluene	340	340	<1000		0.00426		
Vinyl Chloride	35	35	<2		0.00044		
Xylene	490	490	<10,000		0.00613		
Phenol	48	48					
2-Methylphenol	380	380					
4-Methylphenol	1100	1100					
2,4-Dimethylphenol	58	58					
Naphthalene	230	230	<400				
2-Methylnaphthalene	770	770					
Acenaphthene	48	48					
Fluorene	33	33					
Phenanthrene	350	350					
alpha-Chlordane	0.14	0.14	<300				
OCDD (pg/L)	15 (Note 2)	15 (Note 2)	<30				
DISSOLVED METALS (ug/L)							
Aluminum	203	203					
Arsenic	8.0	8.0	<50				
Barium	258	258	<5000				
Beryllium	<1.0	<1.0					
Cadmium	<1.0	<1.0	<20				
Calcium	127,000	127,000					
Chromium	<3.0	<3.0	<50				
Cobalt	7.8	7.8					
Copper	<3.0	<3.0	<20				
Iron	11,300	11,300					
Lead	1.5	1.5	<100				
Manganese	718	718	<500				
Mercury	<0.20	<0.20	<2				
Nickel	<13.0	<13.0	<80				
Selenium	31.7	31.7	<20				
Vanadium	2.7	2.7					
Zinc	82.3	82.3	<50				
PARAMETERS		(mg/L)	(mg/L)				
Alkalinity	17	17					
Hardness	44	44					
TDS	78	78					
TSS	<1.0	<1.0	<300				
Chloride	8.9	8.9					
Sulfate	14	14					
BOD, 5 Day	11	11	<300				
COD	34	34					

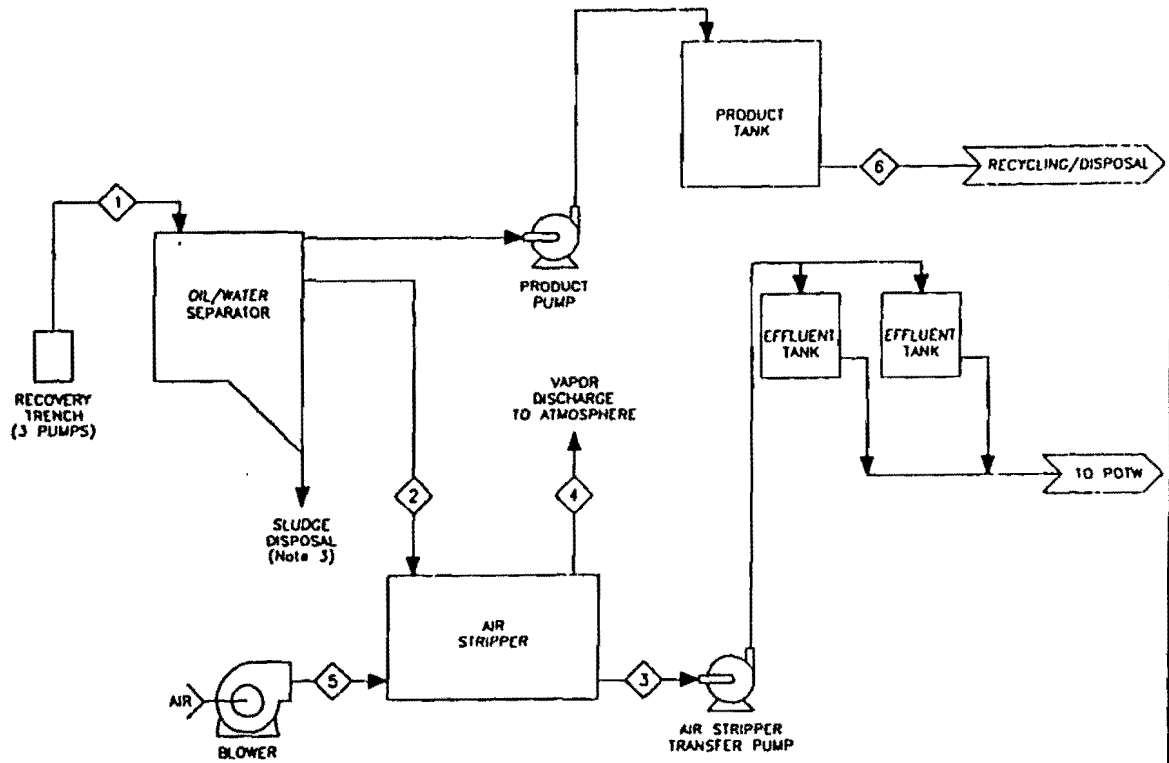

NOTES:

(1) THIS PROCESS FLOW DIAGRAM STATES EFFLUENT CRITERIA BASED ON PERFORMANCE REQUIREMENTS FOR THE SYSTEM. ORGANIC COMPOUND EFFLUENT CRITERIA ARE BASED ON FEDERAL MAXIMUM CONTAMINANT LEVELS FOR DRINKING WATER. METALS EFFLUENT CRITERIA ARE BASED ON POTW ACCEPTANCE CRITERIA.

(2) USING THE TOXICITY EQUIVALENT FACTOR FOR THE CONCENTRATION OF 15,000 FOR OCDD IS EQUIVALENT TO 15 pg/L TCDD.

(3) SLUDGES WILL BE REMOVED PERIODICALLY.

(4) ASSUME TOTAL VAPORIZATION FOR WORST CASE SCENARIO.

(5) AIR FLOW RATE IS BASED ON THEORETICAL REQUIREMENTS USING A LOW PROFILE AIR STRIPPER. ACTUAL FLOW RATE WILL DEPEND ON ACTUAL EQUIPMENT USED.

FIGURE 8
PROCESS FLOW DIAGRAM

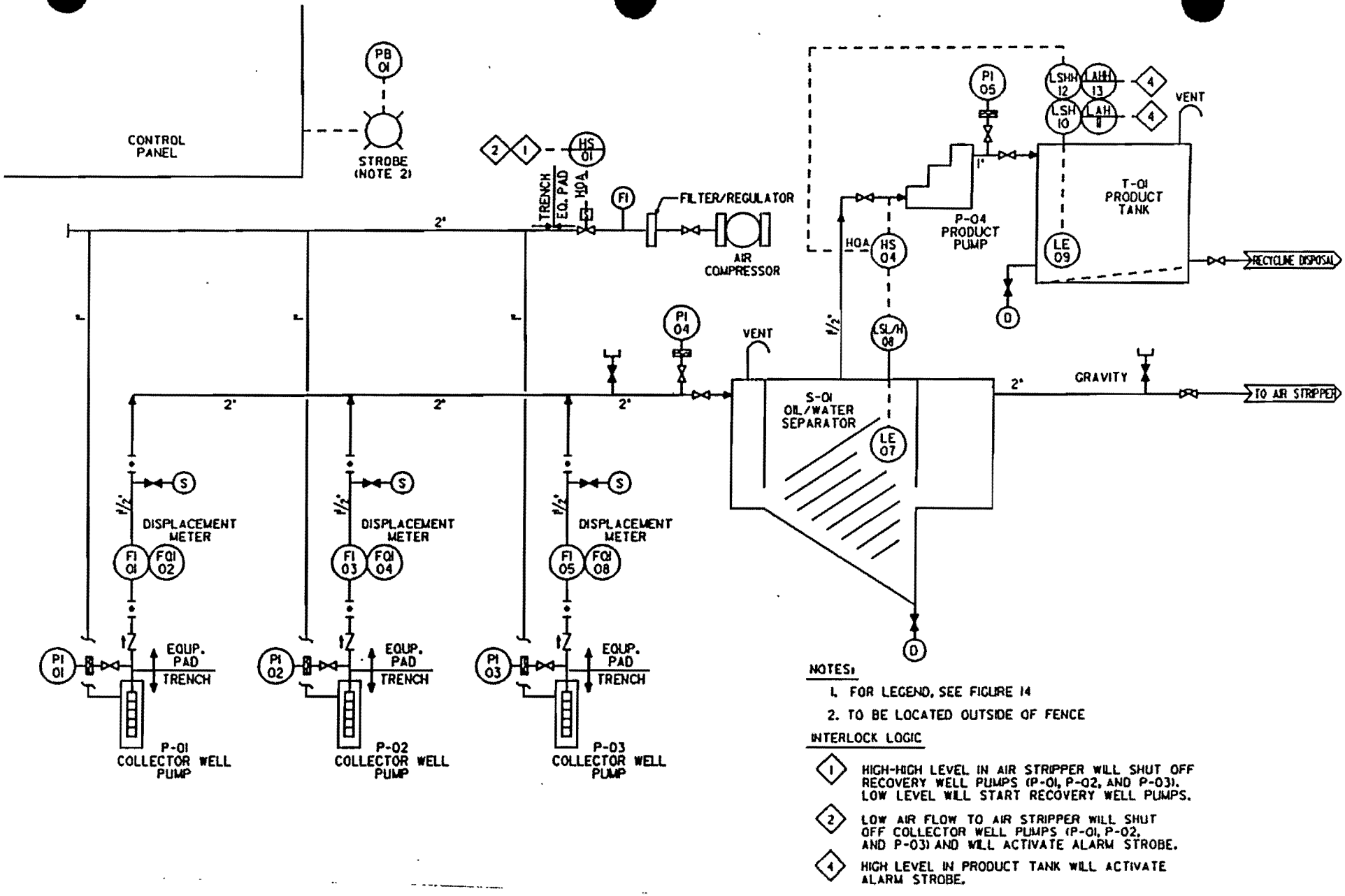

FIGURE 9
PROCESS AND INSTRUMENTATION DIAGRAM (Sheet 1 of 3)

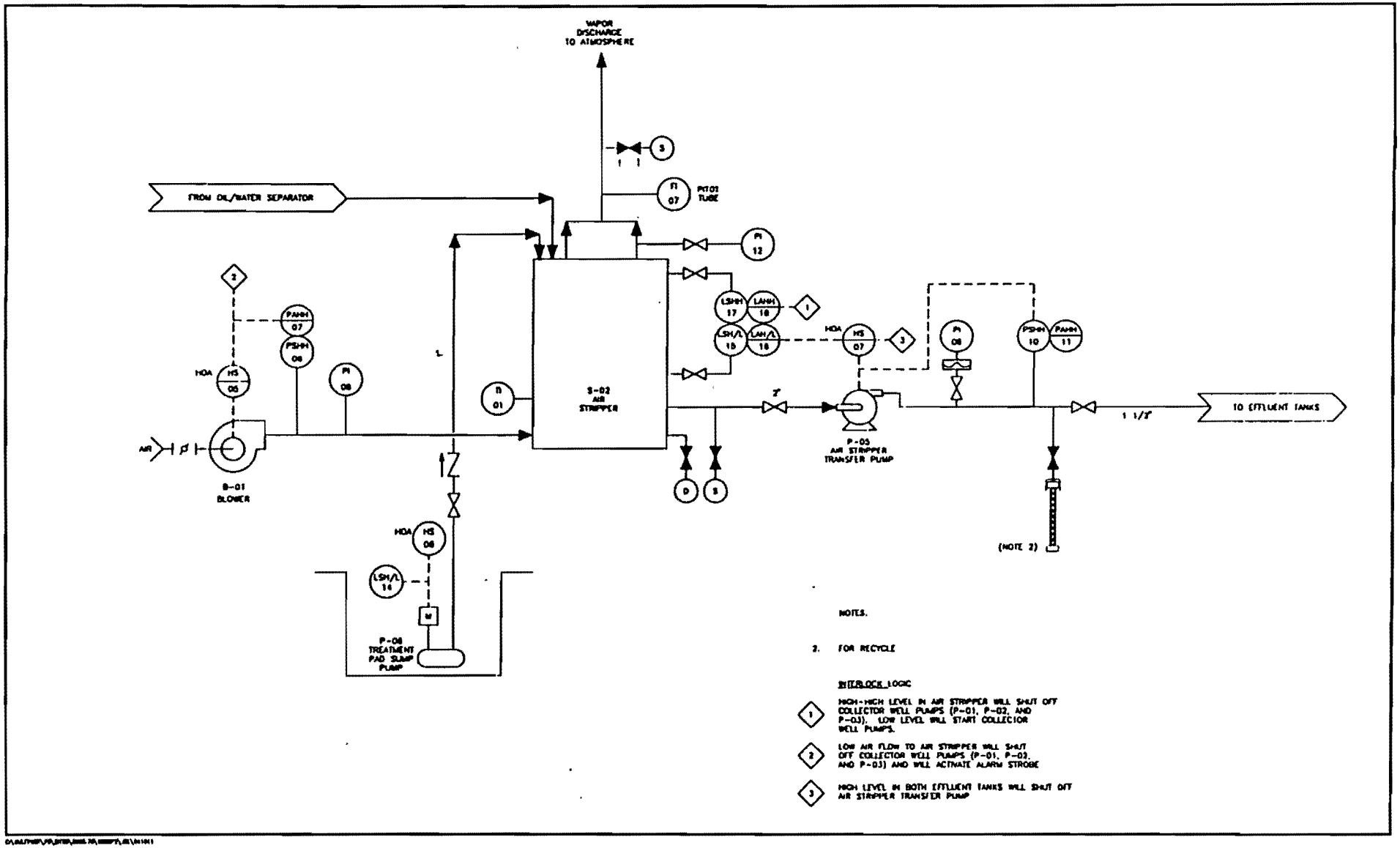

FIGURE 10
PROCESS AND INSTRUMENTATION DIAGRAM (Sheet 2 of 3)

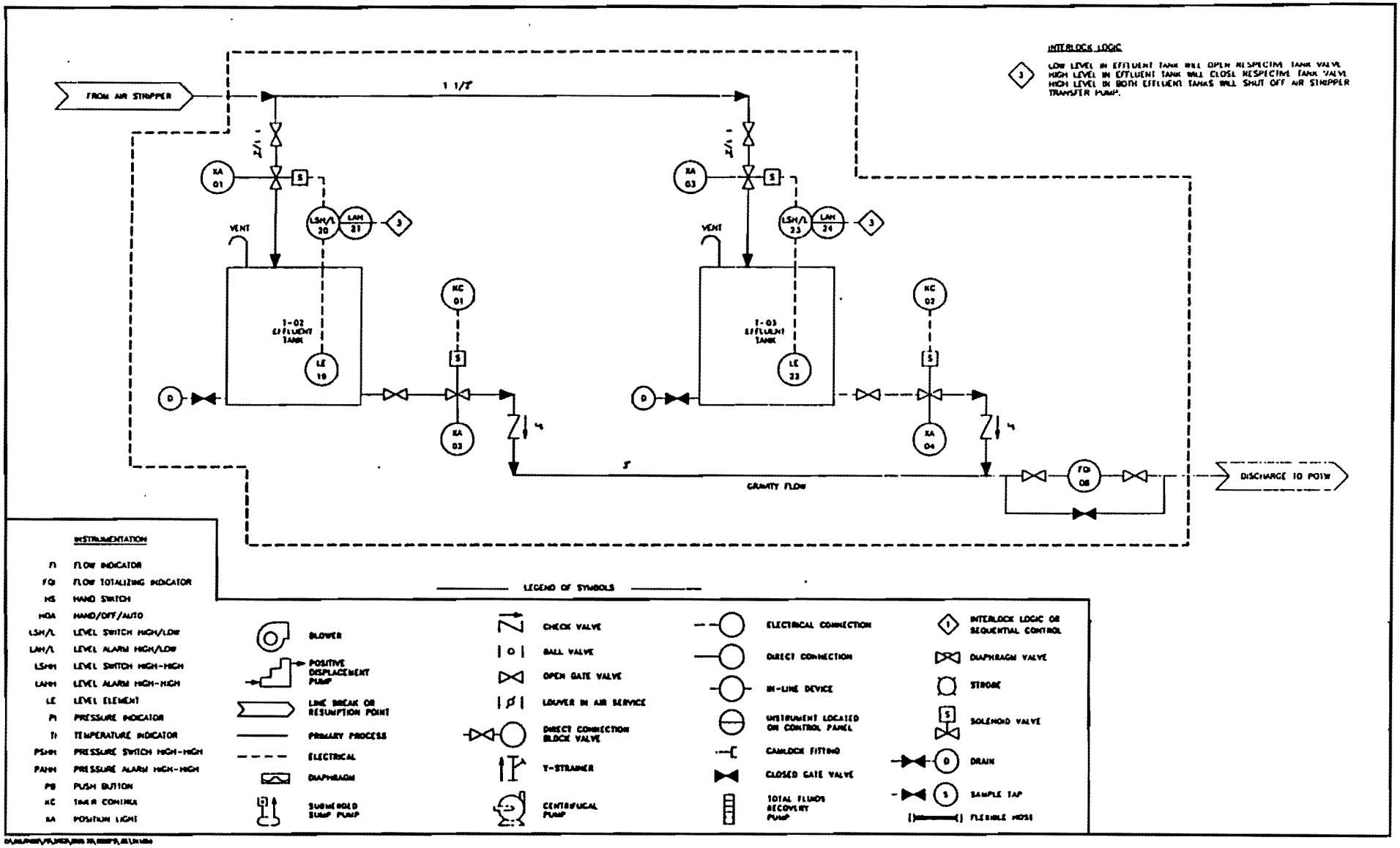

FIGURE 11
PROCESS AND INSTRUMENTATION DIAGRAM (Sheet 3 of 3)

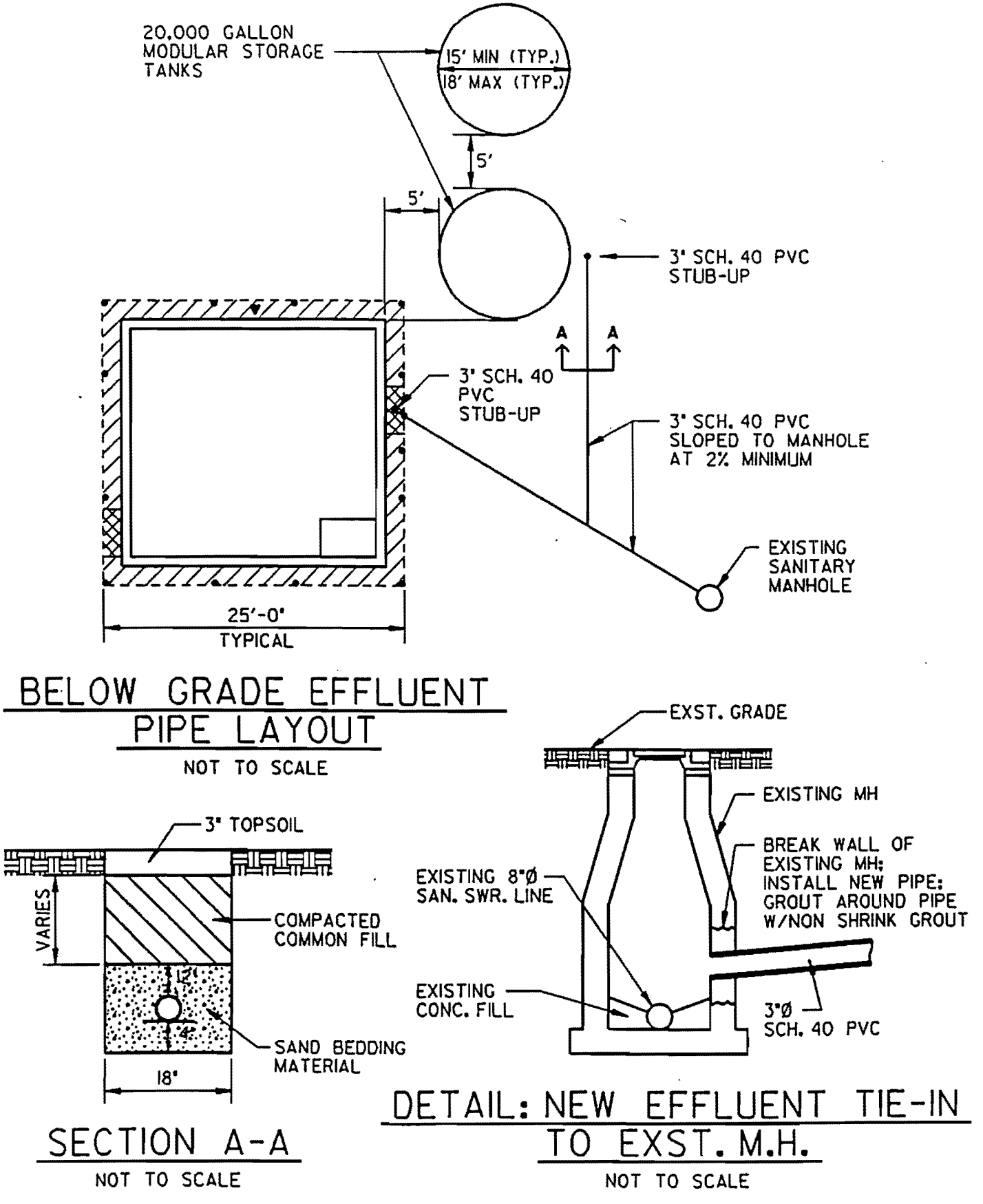

FIGURE 12
EFFLUENT TRENCH LAYOUT AND DETAILS

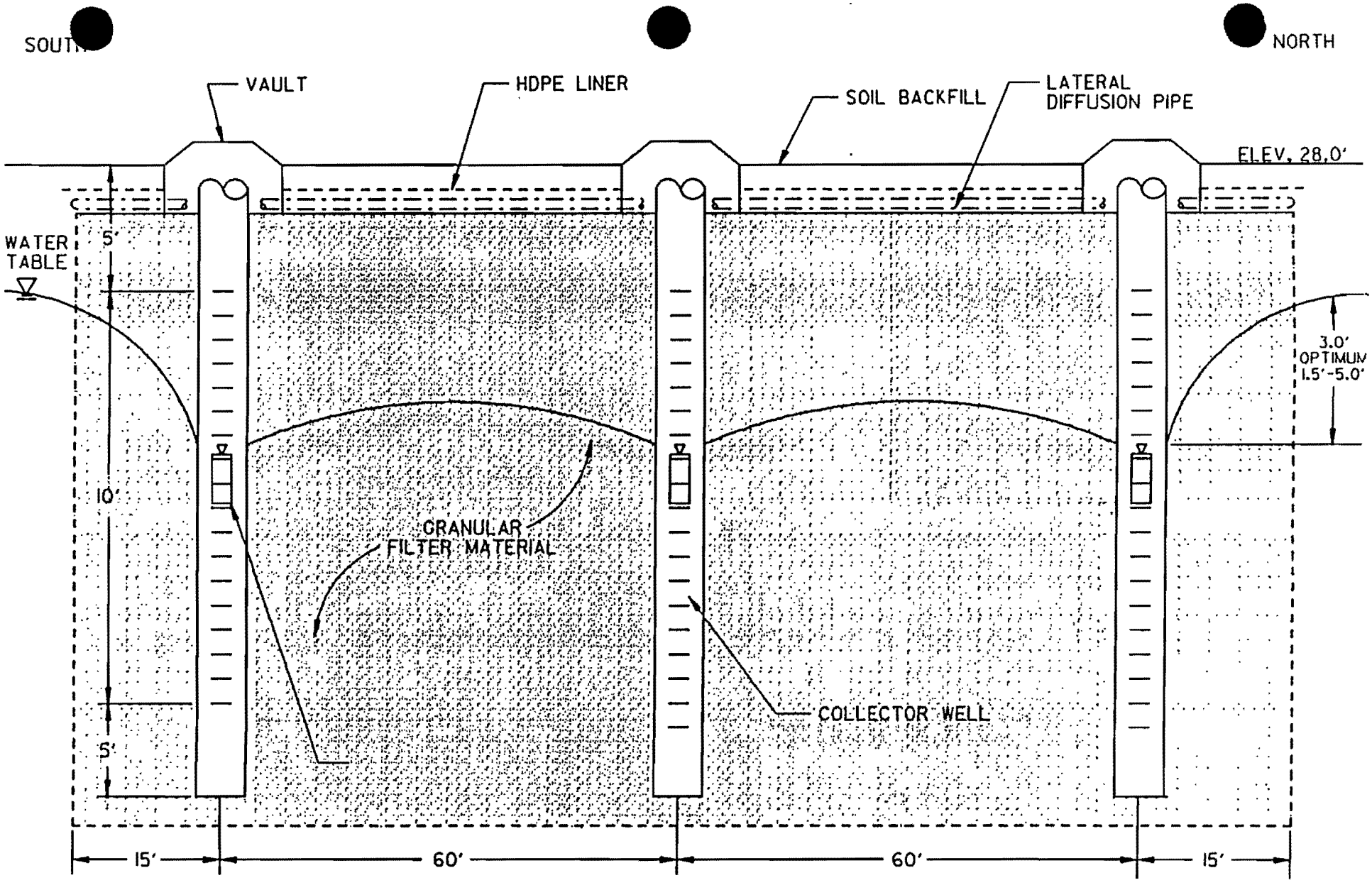

NOTES:

DRAWING NOT TO SCALE

ALL ELEVATIONS ARE MEAN LOW WATER

FIGURE 13
RECOVERY TRENCH SECTION

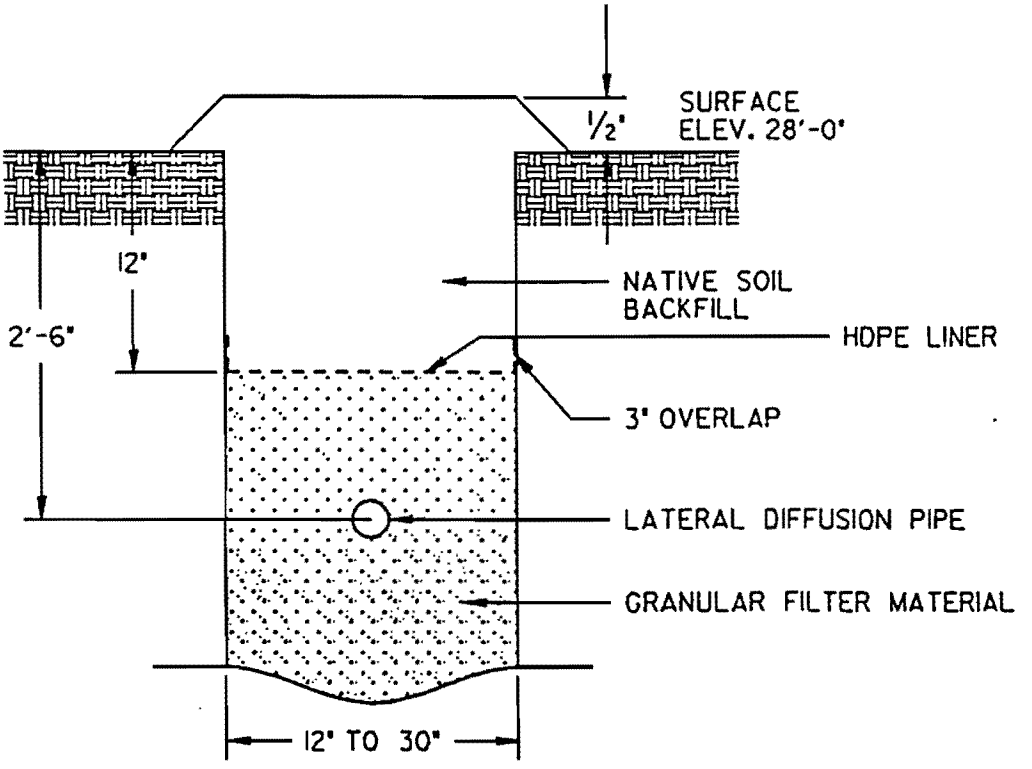

RECOVERY TRENCH COVER

NOT TO SCALE

FIGURE 14
RECOVERY TRENCH COVER

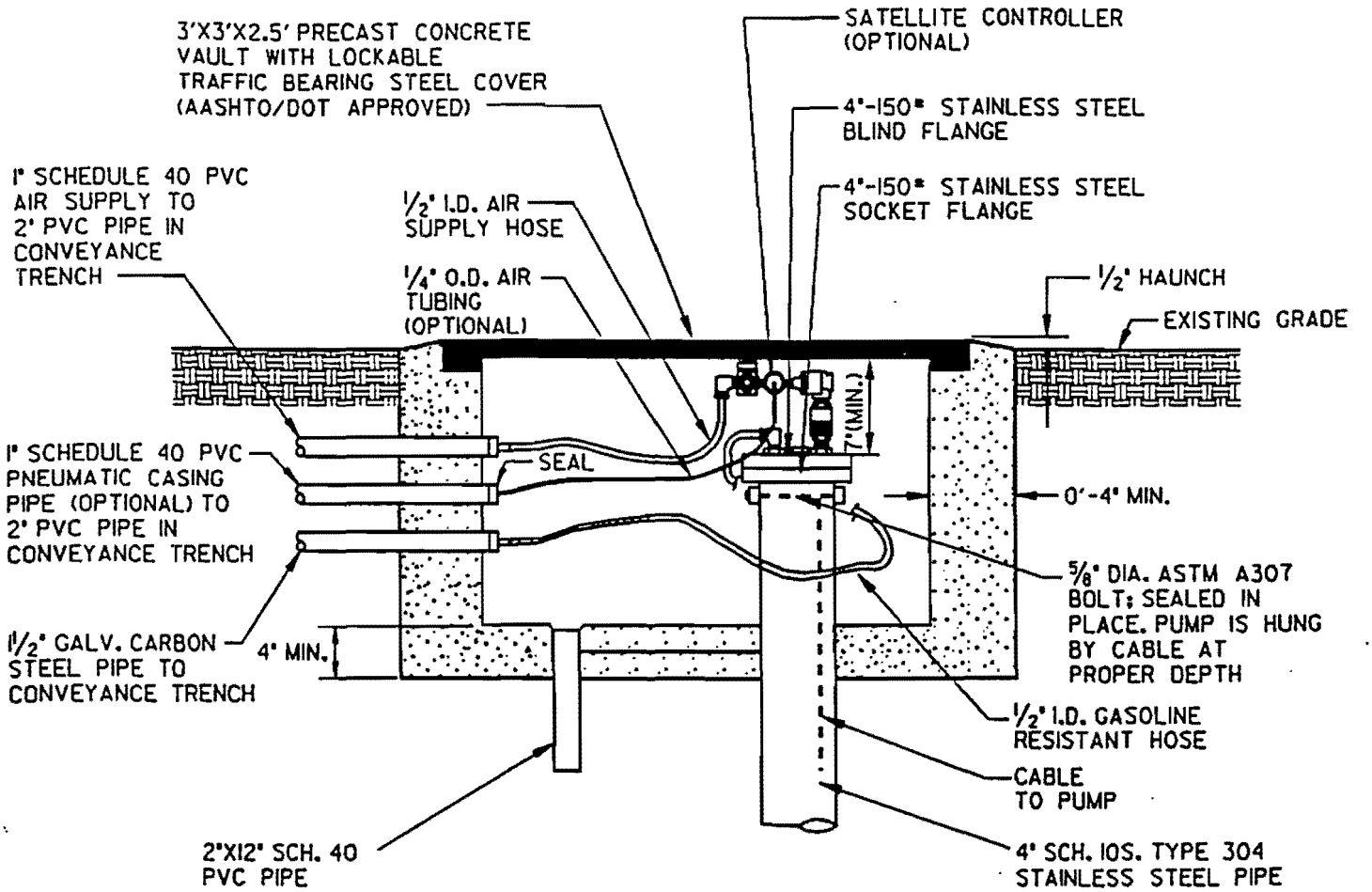

RECOVERY VAULT

NOT TO SCALE

NOTES:

1. STEEL CABLE USED TO SUPPORT PUMP SHALL BE ADJUSTABLE TO MOVE PUMP 6 FEET UP OR DOWN IN WELL.

2. 6 FEET OF ADDITIONAL 1/2" I.D. RECOVERY HOSE AND AIR HOSE SHALL BE REQUIRED FOR LOWERING OF PUMP.

3. GROUT ALL OPENINGS AS REQUIRED.

FIGURE 15
RECOVERY VAULT

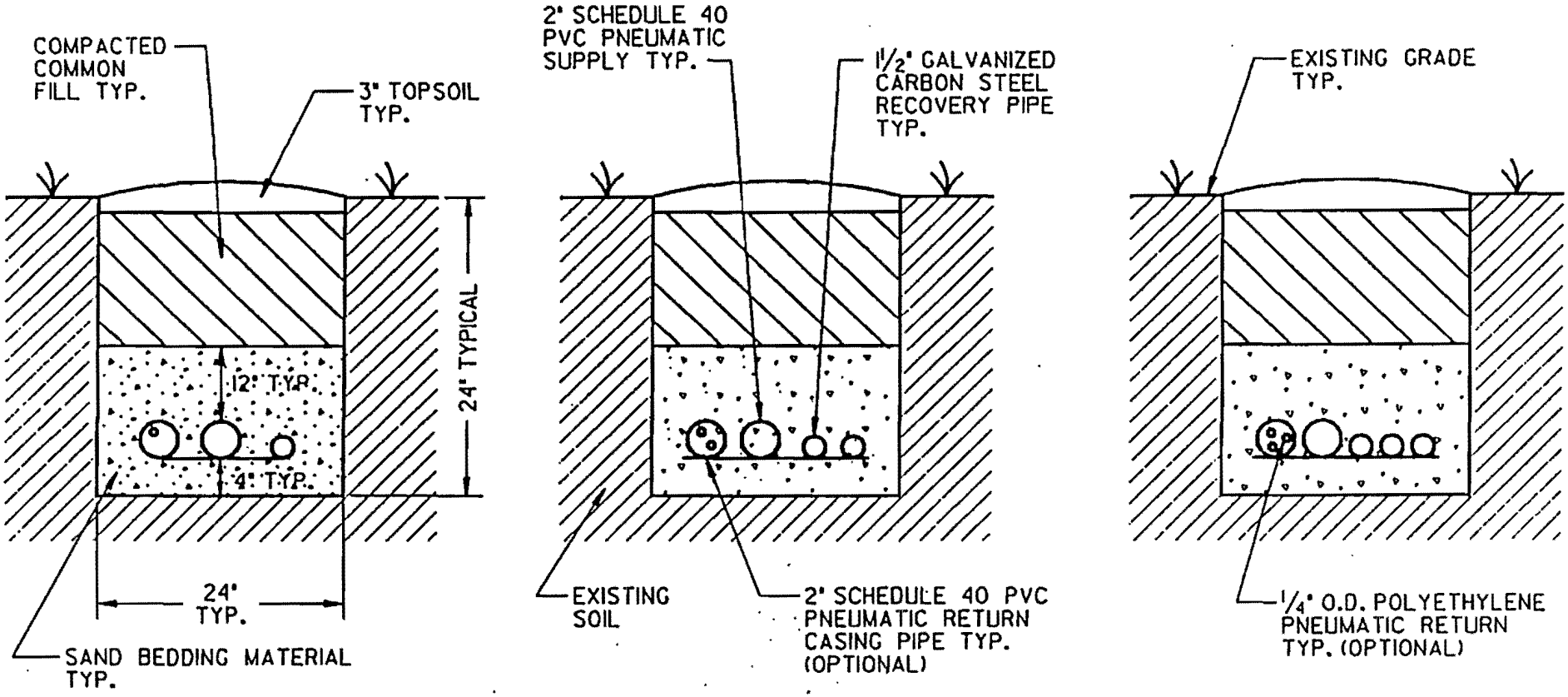

SECTION A-A
NOT TO SCALE

SECTION B-B
NOT TO SCALE

SECTION C-C
NOT TO SCALE

NOTES:

1. SEE FIGURE 3 FOR CROSS SECTION LOCATIONS

FIGURE 16
CONVEYANCE TRENCH SECTION

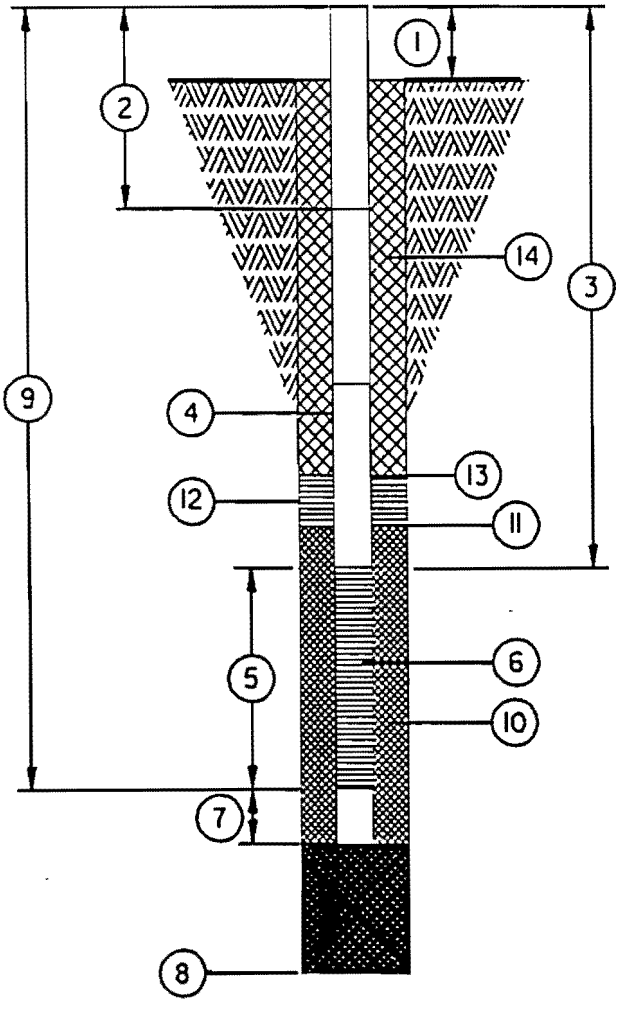

WELL NUMBER GPT-6-RW

DATE OF INSTALLATION 12-12-93

1. HEIGHT OF CASING ABOVE GROUND 2.59'
2. DEPTH TO FIRST COUPLING 7.59'
   COUPLING INTERVAL DEPTHS 7.59', 12.59', 22.59'
3. TOTAL LENGTH OF BLANK PIPE 7.59'
4. TYPE OF BLANK PIPE 5.4" IOS STAINLESS STEEL
5. LENGTH OF SCREEN 15'
6. TYPE OF SCREEN 0.020-SLOT, IOS STAINLESS
7. LENGTH OF SUMP 5'
8. TOTAL DEPTH OF BORING 26' HOLE DIAMETER 12.75"
9. DEPTH TO BOTTOM OF SCREEN 22.59'
10. TYPE OF SCREEN FILTER SILICA SAND
    QUANTITY USED 1300 LBS. SIZE 16/30 U/C
11. DEPTH TO TOP OF FILTER 3'
12. TYPE OF SEAL BENTONITE PELLETS
    QUANTITY USED 75 LBS.
13. DEPTH TO TOP OF SEAL 1.5'
14. TYPE OF GROUT NEAT CEMENT
    GROUT MIXTURE 5% BENTONITE
    METHOD OF PLACEMENT POURED

EXISTING RECOVERY WELL

NOT TO SCALE

FIGURE 17
EXISTING RECOVERY WELL GPT-6-RW

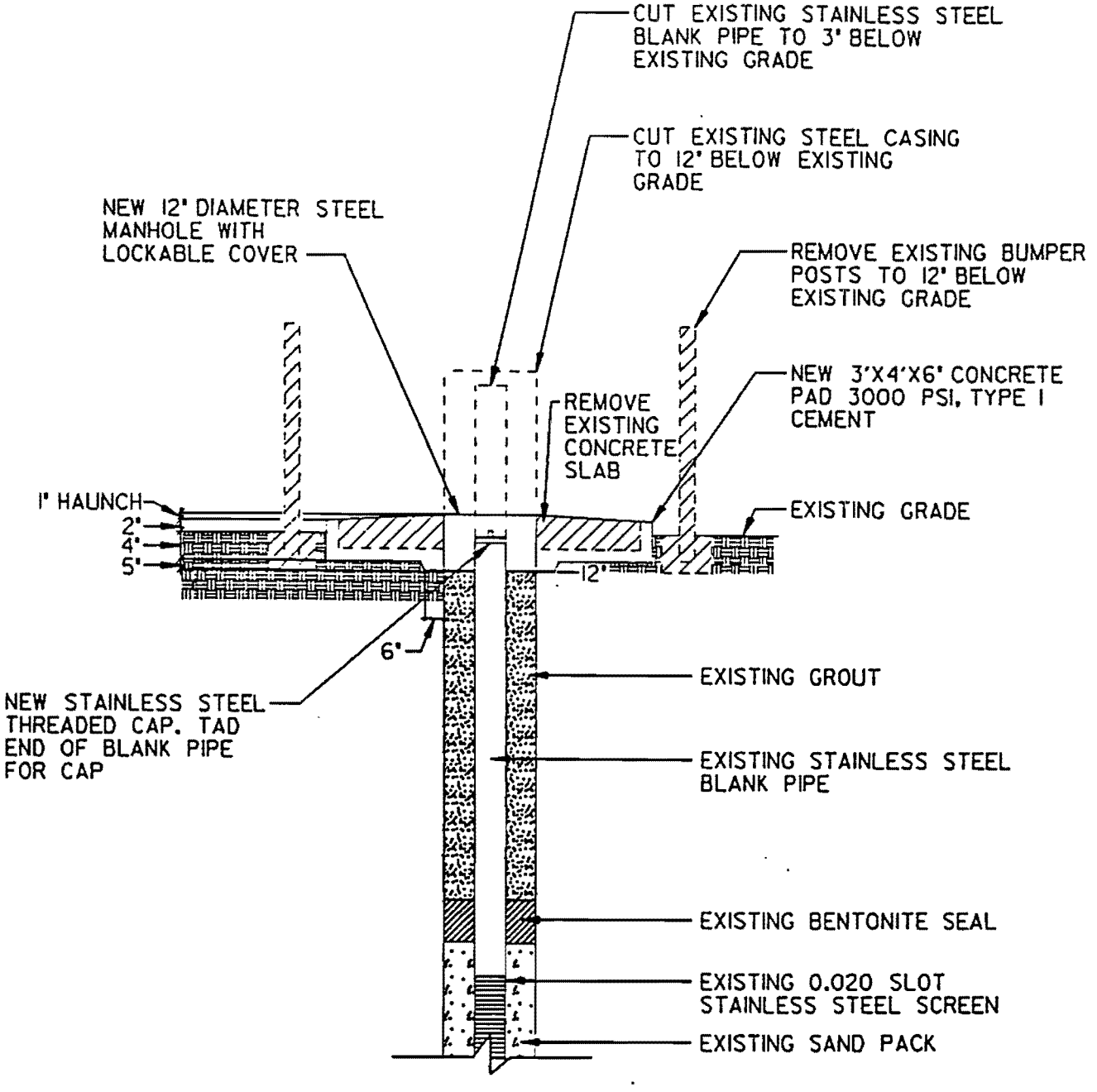

RECONSTRUCTED WELL HEAD DETAIL

NOT TO SCALE

FIGURE 18
RECONSTRUCTED WELL HEAD DETAIL

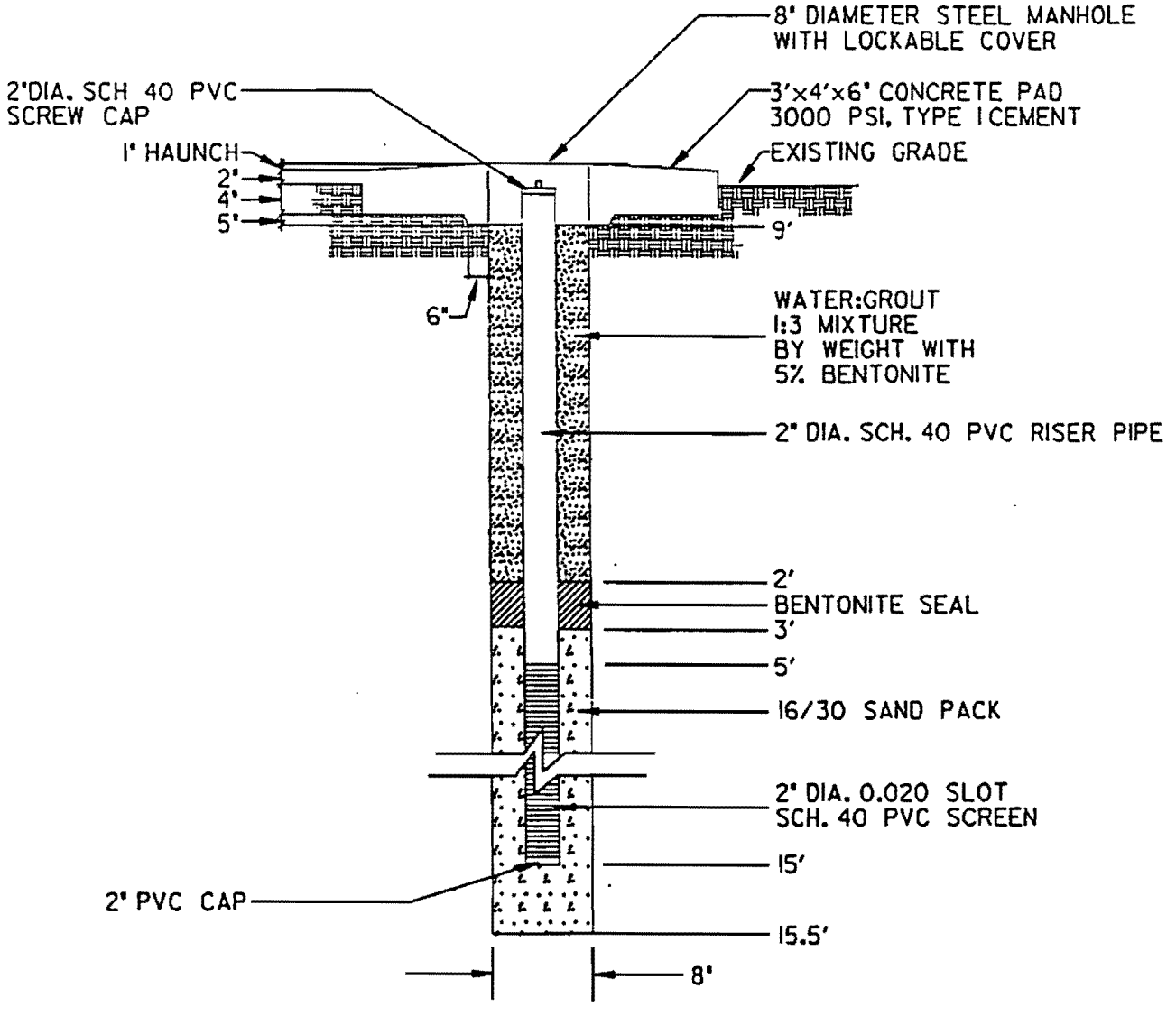

MONITORING WELL DETAIL

NOT TO SCALE

FIGURE 19
MONITORING WELL DETAIL

APPENDIX A
SITE SAFETY AND HEALTH PLAN

(UNDER SEPARATE COVER)

APPENDIX B
QUALITY CONTROL PLAN

(UNDER SEPARATE COVER)

APPENDIX C
ENVIRONMENTAL CONDITIONS REPORT

1.0 INTRODUCTION

Naval Construction Battalion Center (CBC) Gulfport, Mississippi, supports four battalions of the Naval Construction Force and stores and maintains pre-position War Reserve Material Stock. CBC Gulfport consists of 1,100 acres in the western part of Gulfport in Harrison County, approximately 7 miles west of Biloxi, Mississippi. The base is bounded on the north by 28th Street and on the east by 33rd Avenue. CBC Gulfport formerly operated a fire-fighting training area that is the focus of remediation activities conducted under this scope of work. The information for this Environmental Conditions Report was obtained from the *Free-Phase Product Assessment Report Site 6, Fire-Fighting Training Area*, Final Draft, July 1994.

The Fire-Fighting Training Area (Site 6) consisted of two unlined pits located southeast of the intersection of Fifth Street and Colby Avenue. The north pit was 50 feet long, 35 feet wide and 4 feet deep. The south pit was 40 feet long, 25 feet wide and 6 feet deep. The pits have been filled in and their locations are not visibly recognizable from the surface. The north pit is now partially covered by Building 383. Site 6 was most recently used to train electricians to construct and dismantle powerlines and transformers on electric utility poles.

Fire-fighting training activities began at Site 6 in 1966 and continued into 1975. Training was conducted by draining waste liquids into the pits and igniting the liquids. Waste liquids used during training activities were obtained from the Base, Kessler Air Force Base, the Air National Guard and Pascagoula Shipyard. Facility estimates indicate that as much as 500,000 gallons of liquid were burned at the site over the 9-year period. Liquids ignited for training purposes include waste fuels, oils, solvents, paint thinners and cleaning compounds.

A verification study of Site 6 was conducted in 1987, during which three monitoring wells, GPT-6-1, GPT-6-2 and GPT-6-3, were installed and sampled. The wells did not contain any free-phase product until October 1991. At that time, approximately two to three feet of a brown, oily, viscous liquid was present in GPT-6-1. The extent of the free-phase product was delineated in a field investigation conducted in late 1993 and early 1994. During this investigation, 41 Hydropunch™ II well points were used to assess the horizontal and vertical extent of the free-phase product. Also during the field investigation, five additional monitoring wells and one recovery well were installed and sampled. The location of the wells are shown in Figure C-1.

The results of the field investigation indicate that the original plume, first discovered in well GPT-6-1, appears to originate from the south fire-fighting training pit. During delineation of the original plume, an apparent second plume was discovered. The second plume is suspected to originate from the former north fire-fighting training pit. However, it appears that the two plumes have coalesced to form one plume, the

estimated extent of which is shown in Figure C-1. The southern part of the plume has a maximum observed thickness of 2.5 feet in GPT-6-1 and the northern part has a maximum observed thickness of 1.0 foot in Hydropunch™ II well point M-19.

2.0 SOIL CONTAMINATION

During the 1993 field investigation, 2-foot split-spoon soil samples were collected during the installation of monitoring wells GPT-6-5 and GPT-6-7. Soil samples were collected: (1) in the vadose (unsaturated) zone; (2) just below the water table in the saturated zone; and (3) near the contact of the fine- to medium-grained sand formation and the underlying silty clay. All soil samples were analyzed by contract laboratory program (CLP) methods for volatile organic compounds (VOCs) and semivolatile organic compounds (SVOCs). Two of the samples were also analyzed for pesticides, polychlorinated biphenyls (PCBs), target analyte list, target compound list, inorganics and cyanides, total petroleum hydrocarbons, herbicides, dioxins and furans. In addition to volatile and semivolatile analyses, one sample each was analyzed for total petroleum hydrocarbons and total organic carbon. Results of these analyses are found in Table C-1.

A wide range of VOCs were detected in the soil samples, with fuel constituents detected at high concentrations. The largest concentrations were detected from boring GPT-6-5, located in the center of the north pit. Three samples were collected from boring GPT-6-5 to characterize the vertical extent of contamination. Sample SBG6508, collected from the 8- to 10-foot interval, has concentrations ranging from 980 μg/kg tetrachloroethane to 19,000 μg/kg xylene. Sample SBG6503, collected from the 3- to 5-foot interval, also contained VOCs constituents typical of fuel products. The deepest sample from boring GPT-6-5, SB6520, contained lower concentrations of contaminants. Samples SBG6708, SBG6720 and SBG6745 are from boring GPT-6-7, located west of the south pit. SBG6708, collected from 8 to 10 feet, showed slight detections of constituents, with a maximum concentration of 26 μg/kg xylene. The deeper sample reported fewer chemical detections at lower concentrations.

SVOCs were detected in sample SBG6508, primarily SVOC constituents contained in fuels. The sample contained 28,000 μg/kg 2-methylnaphthalene and 7,600 μg/kg anthracene. 2-Methylphthalene and anthracene were also detected in samples SBG6520 and SBG6708. No pesticides, PCBs or herbicides were detected in the soil samples. TPH values ranging from 101 to 88,000 mg/kg were detected in samples SBG6503, SBG6503D, SBG6508 and SBG6708. OCDD was detected in samples SBG6503 and SBG6508 at estimated concentrations of 130 pg/g and 152 pg/g, respectively. The actual result may be less than 130 or non-detect. The OCDD result of 152 pg/g for SBG6508 is qualified as estimated because the associated internal standards exhibited high recoveries.

Metals were detected in all three soil samples, SBG6503, SBG6503D and SBG6508. Results from the deeper sampler were lower for all analytes except selenium. The inorganic results are presented in Table C-2.

3.0 GROUNDWATER CONTAMINATION

During the 1993 field investigation, five additional new monitoring wells and one recovery well were installed. Groundwater samples were collected from the newly installed monitoring wells (except GPT-6-8) and existing monitoring wells GPT-6-2 and GPT-6-3. All groundwater samples were analyzed by contract laboratory program (CLP) methods for volatile organic compounds (VOCs) and semivolatile organic compounds (SVOCs). Two of the groundwater samples were also analyzed for pesticides, polychlorinated biphenyls (PCBs), inorganics and cyanides, total petroleum hydrocarbons, total organic carbon, herbicides, dioxins and furans. In addition to volatile and semivolatile analyses, two samples were also analyzed for total petroleum hydrocarbons. Results of these analyses are found in Table C-3.

Groundwater sampling results from Site 6 indicate the presence of VOCs in the surficial aquifer. VOCs detected above Federal drinking water maximum contaminant levels (MCLs) were vinyl chloride, 1,2-dichloroethane, 1,1,1-trichloroethane and benzene. The VOC contamination is limited to the upper 30 feet of the surficial aquifer. Trace quantities of VOCs were detected in the deeper wells, GPT-6-5 and GPT-6-7. Sample GWG62, which was collected from well GPT-6-2, did not contain any measurable quantities of VOCs. Well GPT-6-2 is upgradient of the fire-fighting training pits. Well GPT-6-3 is downgradient of the pits and the corresponding sample, GWG63, contained VOCs with the highest concentration being 13 $\mu g/\ell$ xylene.

Samples analyzed for SVOCs exhibited similar patterns to those analyzed for VOCs. Concentrations of 2-methylphenol, 4-methylphenol, naphthalene, 2-methylnaphthalene and phenanthrene were detected in the willow well samples GWG64 and GWG66. Comparatively small amounts of naphthalene and 2-methylphenol and trace amounts of several other constituents were detected in samples from the deeper wells GWG64 and GWG66. No compounds were detected in sample GWG62 and a few compounds in trace amounts were detected in GWG63.

Samples GWG64, GWG64D and GWG66 were analyzed for herbicides, pesticides, PCBs and TOC. Herbicides were not detected in any of the samples and only GWG64D showed any concentration of pesticides (approximately 0.14 $\mu g/\ell$ of alpha-chlordane). TOC values ranged from 270 to 302 mg/ℓ. TPH was analyzed for and detected in samples GWG62, GWG63, GWG64, GWG64D and GWG66. GWG62 and GWG63 only contained trace amounts, however the other samples measured concentrations ranging from 72.5 to 295 mg/ℓ.

As with the soil samples, the only compound detected when analyzing for dioxins and furans was OCDD. All three samples that were analyzed contained OCDD in concentrations ranging from 6,450 to 15,000 pg/ℓ.

Inorganic analyses were run on two separate occasions. Initially, two unfiltered samples from well GPT-6-4 and one sample from well GPT-6-6 were analyzed for inorganics. All three samples contained measurable concentrations of inorganics, including calcium,

iron, magnesium, potassium and sodium. Additional samples were analyzed for inorganic compounds to determine the effects of filtering. Filtering the sample reduced all of the detected compound concentrations, in particular the aluminum, barium, chromium, iron, lead, vanadium and zinc were reduced substantially. Table C-4 summarizes the results of the inorganic analyses.

TABLE C-1 COMPOUNDS DETECTED IN SOIL				
Well Number Depth	**GPT-6-5 3 to 5 ft SBG6503[1]**	**GPT-6-5 3 to 5 ft SBG6503D[1,2]**	**GPT-6-5 8 to 10 ft SBG6508[1,2]**	**GPT-6-5 20 to 23 SBG6520**
Volatile Organic Compounds (µg/kg)				
1,1-Dichloroethene	1J	11U	17J	12U
1,1-Dichloroethane	3J	11U	38J	12U
1,2-Dichloroethene (total)	7J	11U	23J	12U
1,2-Dichloroethane	4J	11U	70J	12U
2-Butanone[3]	10J	11U	11UJ	12U
1,1,1-Trichloroethane	11U	11U	27J	12U
Trichloroethane	3J	3J	39J	12U
Benzene	20	12J	170J	4J
Tetrachloroethane	63	51J	980J	10J
Toluene[4]	160	140J	5,200J	73
Ethylbenzene[4]	170	110J	2,700J	34
Xylene (total)	590	400	19,000J	240
Semivolatile Organic Compounds (µg/kg)				
4-Methylphenol	250J	350J	3,700U	400U
Naphthalene	300J	310J	4,800	330J
2-Methylnaphthalene	260J	370U	28,000	2,300
Acenaphthene	370U	370U	720J	400U
Fluorene	370U	370U	4,400	410
Phenanthrene	370U	370U	2,100J	260J
Anthracene	370U	370U	7,600	830
Pyrene	370UJ[4]	370U	1,400J	400U
Pesticides (µg/kg)	ND	ND	ND	NA
Herbicides (µg/kg)	ND	ND	ND	NA
Total Organic Carbon (mg/kg)	ND	ND	ND	NA
Total Petroleum Hydrocarbons (mg/kg)	88,000	16,000	15,300	NA
Dioxins and Furans (pg/g)				
Octachlorodibenzodioxin	130MPC	110U	152J	NA
See notes at end of table.				

TABLE C-1 COMPOUNDS DETECTED IN SOIL				
Well Number Depth Analyte	**GPT-6-7 8 to 10 ft SBG6708**	**GPT-6-7 20 to 22 ft SBG6720**	**GPT-6-7 20 to 22 ft SBG6720D**	**GPT-6-7 45 to 47 ft SBG6745**
Volatile Organic Compounds (µg/kg)				
Carbon disulfide	12U	2J	NA	12U
1,2-Dichloroethene (total)	9J	12U	NA	12U
1,2-Dichloroethane	8J	12U	NA	12U
Benzene	2J	12U	NA	12U
Tetrachloroethane[4]	3J	12U	NA	12U
Toluene[4]	11J	2J	NA	1J
Ethylbenzene[4]	4J	12U	NA	12U
Xylene (total)	26	12U	NA	12U
Semivolatile Organic Compounds (µg/kg)				
Naphthalene	390	380U	NA	380U
2-Methylnaphthalene	880	380U	NA	55J
Acenaphthene	63J	380U	NA	380U
Fluorene	200J	380U	NA	380U
Phenanthrene	380U	380U	NA	52J
Anthracene	450	380U	NA	380U
bis(2-Ethylhexyl)phthalate	59J	380U	NA	380U[5]
Herbicides (µg/kg)	NA	NA	NA	NA
Pesticides and PCBs (µg/kg)	NA	NA	NA	NA
Total Organic Carbon (mg/kg)	NA	1,960	2,030	NA
Total Petroleum Hydrocarbons (mg/kg)	101	NA	NA	NA
Dioxins and Furans (pg/g)	NA	NA	NA	NA

[1] Sample values reported from diluted sample and quantitation limits reported from original analyses.
[2] Sample values and quantitation limits flagged "J" and "UJ" as estimated because one or more surrogate recoveries were outside quality assurance and quality control (QA/QC) limit.
[3] Values flagged "J" as estimated because the calibration contained greater than 25 percent but less than 50 percent differences between the 2 columns.
[4] Sample values and quantitation limits flagged "J" and "UJ" as estimated because the internal standards for chlorobenzene-d_5, chrysene-d_{12} and phenanthrene-d_{10} exhibited areas less than QA/QC limits.
[5] Values flagged "U" due to method blank contamination.

Notes: ft = feet
µg/kg = micrograms per kilogram
J = estimated value
U = undetected, value is contract required quantitation limits
ND = not detected
NA = not analyzed
mg/kg = milligrams per kilogram
pg/g = picograms per gram
MPC = maximum possible concentration
PCB = polychlorinated biphenyl

TABLE C-2 INORGANICS DETECTED IN SOIL			
Well Number Depth	**GPT-6-5 3 to 5 ft SBG6503 (mg/kg)**	**GPT-6-5 3 to 5 ft SBG6503D (mg/kg)**	**GPT-6-5 8 to 10 ft SBG6508 (mg/kg)**
Aluminum	5,840	8,610	1,460
Arsenic[1]	0.48J	1.5J	0.39UJ
Barium[2]	32.0J	29.4J	2.2U
Chromium	8.4	7.2	3.9
Cobalt	0.91U	1.2J	0.98U
Iron	1,660	3,040	127
Lead	62.1	90.2	6.7
Mercury	0.07	0.03U	0.04U
Nickel[1]	3.8J	5.2J	2.2UJ
Potassium	137U	272J	147U
Selenium	0.69J	0.80J	5.1
Vanadium	4.5J	10.5J	3.9J
Zinc	6.9U	17.7	0.37U

[1] Sample values and quantitation limits flagged J and UJ (estimated) because preparation blank exhibited negative bias for arsenic, beryllium and nickel.
[2] Values flagged U as non-detect because of field blank contamination.

Notes: ft = feet
mg/kg = milligrams per kilogram
J = estimated value
U = undetected, value is contract required quantitation limit.

TABLE C-3 COMPOUNDS DETECTED IN GROUNDWATER				
Well Number	**GPT-6-2 GWG62**	**GPT-6-3 GWG63**	**GPT-6-4 GWG64[1,2,3]**	**GPT-6-4 GWG64D[1,2]**
Volatile Organic Compounds (µg/ℓ)				
Chloromethane	10U	2J	12J	10U
Vinyl chloride	10U	10U	21J	35J
Chloroethane[4]	10U	10U	230J	310J
Methylene chloride[5]	10U	10U	51J	95J
Carbon disulfide	10U	10U	3J	4J
1,1-Dichloroethene	10U	9J	1,800	3,100
1,1-Dichloroethane	10U	10	2,700	4,900
1,2-Dichloroethene (total)	10U	11	89J	63J
Chloroform	10U	10U	14J	20J
1,2-Dichloroethane	10U	9J	890J	1,200
2-Butanone	10U	10U	59J	80J
1,1,1-Trichloroethane	10U	10U	3,400	5,900
Trichloroethane	10U	3J	6J	6J
Benzene	10U	12	71J	83J
4-Methyl-2-pentanone	10U	10U	74J	100J
Tetrachloroethane	10U	1J	32J	12J
Toluene[4]	10U	10	340J	260J
Ethylbenzene	10J	4J	77J	36J
Xylene (total)	10U	13	490J	230J
Semivolatile Organic Compounds (µg/ℓ)				
Phenol	10U	10U	48J	47J
2-Methylphenol	10U	2J	380J	370
4-Methylphenol	10U	10U	970J	1,100
2,4-Dimethylphenol	10U	10U	51J	56J
Naphthalene	10U	16	230J	210
2-Methylnaphthalene	10U	13	770J	700
Acenaphthene	10U	10U	48J	39J
Phenanthrene	10U	10U	350J	270
Pesticides (µg/ℓ)				
alpha-Chlordane	NA	NA	0.25R	0.14J
Herbicides (µg/ℓ)	NA	NA	ND	ND
Total Organic Carbon (mg/ℓ)	NA	NA	270	302
Total Petroleum Hydrocarbons (mg/ℓ)	0.88	0.10	295	250
Dioxins and Furans (pg/ℓ)				
Octachlorodibenzodioxin	NA	NA	8,630	6,450

TABLE C-3 COMPOUNDS DETECTED IN GROUNDWATER				
Well Number	GPT-6-5 GWG65	GPT-6-6 GWG66	GPT-6-7 GWG67	
Volatile Organic Compounds (μg/ℓ)				
Chloromethane	10U	10U2J	7JNA	
1,1-Dichloroethane	10U	3J	10U	
1,2-Dichloroethene (total)	10U	170	10U	
1,2-Dichloroethane	10U	23	10U	
2-Butanone	10U	19	10U	
Trichloroethane	10U	90	10U	
Benzene	3J	21	10U	
Tetrachloroethane	2J	2J	10U	
Toluene	13	43	20	
Ethylbenzene	4J	28	12	
Xylene (total)	25	190	73	
Semivolatile Organic Compounds (μg/ℓ)				
2-Methylphenol	10U	19J	10U	
4-Methylphenol	3J	36J	10U	
Naphthalene	16	250	16	
2-Methylnaphthalene	48	250	31	
Acenaphthene	3J	11J	1J	
Fluorene	8J	23J	2J	
Phenanthrene	15	59J	5J	
Herbicides (μg/ℓ)	NA	ND	NA	
Total Organic Carbon (mg/ℓ)	NA	264	NA	
Total Petroleum Hydrocarbons (mg/ℓ)	NA	72.5	NA	
Dioxins and Furans (pg/ℓ)				
Octachlorodibenzodioxin	NA	15,000	NA	

[1] Volatile organic compound values estimated because surrogate recovery exceeded quality assurance and quality control limit.
[2] Values flagged "D" in favor of the diluted sample and "E" in favor of the original sample.
[3] Semivolatile organic compound (SVOC), pesticide and polychlorinated biphenyl values and quantitation limits are flagged "J" and "UR" because recoveries were less than 10 percent.
[4] Value estimated because the concentration exceeded linear range.
[5] Values and quantitation limits flagged "J" and "U" because of method blank contamination.

Notes: μg/ℓ = micrograms per liter
U = undetected
J = estimated value
NA = not analyzed
ND = not detected
mg/ℓ = milligrams per liter
R = rejected
pg/ℓ = picograms per liter

TABLE C-4
INORGANICS DETECTED IN GROUNDWATER

	GWG64 Unfiltered (μg/ℓ)	GWG64D Unfiltered (μg/ℓ)	GWG66 Unfiltered (μg/ℓ)	GWG62 Filtered (μg/ℓ)	GWG63 Filtered (μg/ℓ)	GWG64 Filtered (μg/ℓ)	GWG64 Unfiltered (μg/ℓ)
Aluminum	194,000	127,000	80,200	203	125	111	83,100
Arsenic[1]	20.3J	16.1J	23.9J	1.0	ND	6.0	16.8
Barium	771	639	187J	92.4	93.3	259	584
Beryllium[2]	0.73J	0.29J	1.7J	NA	NA	NA	NA
Cadmium	5.4	3.4J	3.2U	NA	NA	NA	NA
Calcium	145,000	143,000	54,400	4,790	5,530	127,000	149,000
Chromium	238	159	92.6	ND	ND	ND	88.2
Cobalt	18.5J	14.2J	18.0J	ND	ND	7.6	13.6
Copper	79.8	53.4	25.2	ND	ND	ND	30.1
Iron	34,100	31,500	28,200	29.8	38.3	11,200	27,600
Lead	533	178	48.6	0.8	ND	1.5	378
Magnesium	11,200	10,800	3,370J	1,000	1,050	10,300	27,600
Managanese	903	877	219	4.7	9.9	718	890
Mercury	1.4	0.68	0.26	NA	NA	NA	NA
Nickel	46.5	44.3	34.2J	ND	ND	ND	19.4
Potassium	5,900	6,130	1,620J	ND	615	4,690	4,830
Selenium[3]	36.0J	3.5J	4.9J	21.7	ND	1.1	7.7
Vanadium	53.8	41.9J	108	ND	ND	2,7	28.8
Zinc	247	159	73.8	62.3	42.0	20.3	142
Cyanide	3.8J	2.7J	1.7J	NA	NA	NA	NA

[1] Sample values and quantitation limits are estimated "J" and "UJ" because the matrix spike recoveries for arsenic and thallium were below the control limit.
[2] Sample values and quantitation limits flagged "J" and "UJ" (estimated) because the preparation blank exhibited negative bias.
[3] Sample values are flagged "J" (estimated) and non-detects are flagged "R" as rejected because the matrix spike for selenium was below 30 percent.

Notes: μg/ℓ = micrograms per liter
J = estimated value
U = undetected, value is the contract required quantitation limit
ND = Not detected at or above the reporting level
NA = Not analyzed

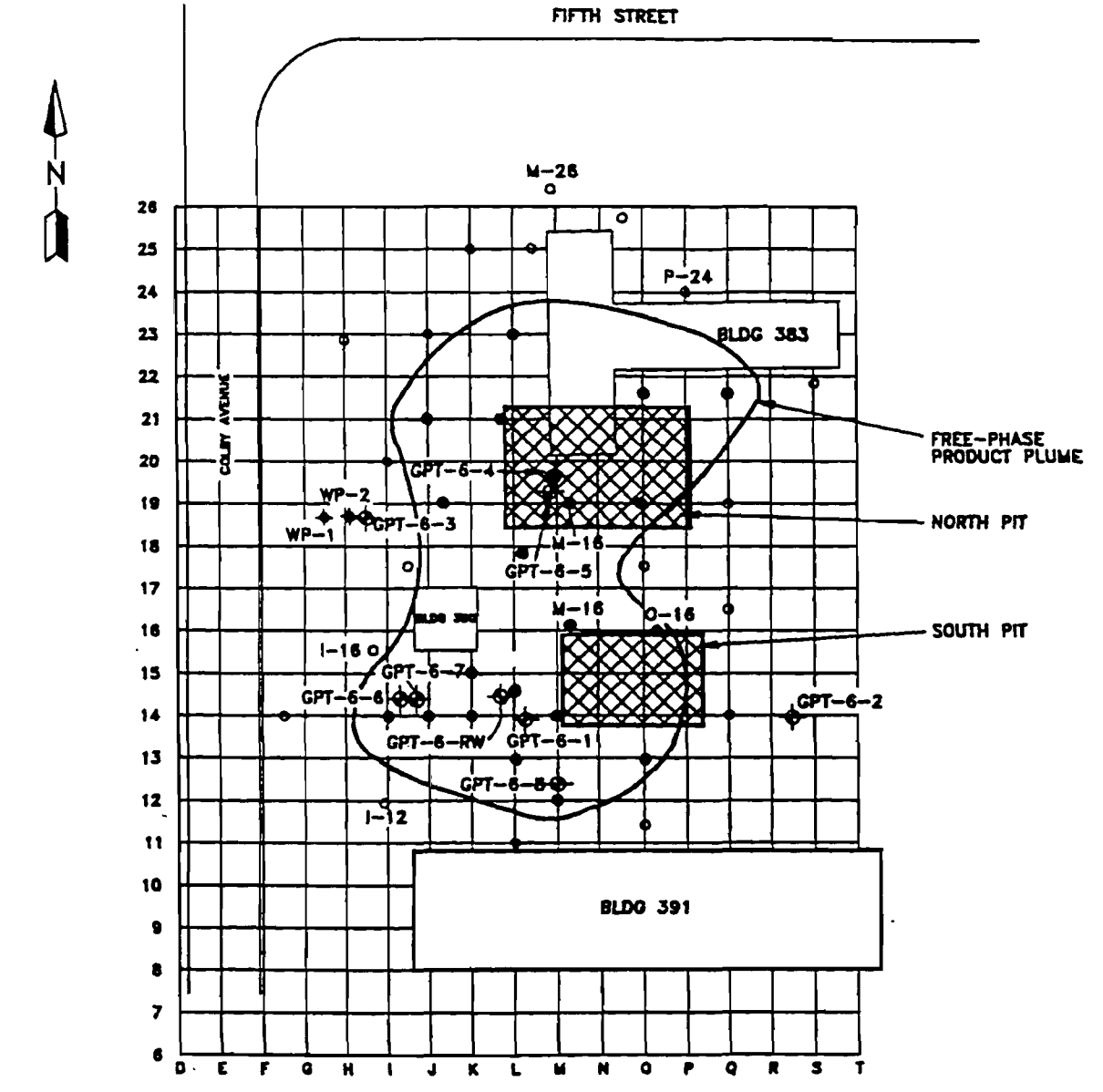

LEGEND

GPT-6-8 MONITORING WELL LOCATION

WP-1 WELL POINT LOCATION

I-16 HYDROPUNCH WELL POINT LOCATION WITHOUT FREE-PHASE PRODUCT

M-16 HYDROPUNCH WELL POINT LOCATION WITH FREE-PHASE PRODUCT

FREE-PHASE PRODUCT PLUME

FORMER FIRE FIGHTING TRAINING AREA

0 30 60

SCALE: 1" = 60'

FIGURE C-1
LOCATION OF WELLS

APPENDIX D
ENVIRONMENTAL PROTECTION PLAN

1.0 INTRODUCTION

This Plan describes the environmental protection measures Morrison Knudsen Corporation (MK) proposes to use at Naval Construction Battalion Center (CBC) Gulfport, Mississippi. The project involves installation of a groundwater collection trench and treatment system to remediate groundwater contamination at the Fire-Fighting Training Area (Site 6). The system includes a collection trench with three extraction wells to remove organic and inorganic compounds from the groundwater.

Morrison Knudsen Corporation will perform all work in such a manner to minimize pollution air, water and land. Within applicable regulatory requirements, noise and the disposal of solid waste materials and other pollutants will be controlled.

2.0 MEASURES FOR PROTECTING NATURAL RESOURCES

2.1 LAND PROTECTION

Except for any work or storage areas and access routes specifically assigned for MK's use under this contract, the land areas will be preserved in their present condition. Trees and shrubs will not be removed, cut, defaced, injured or destroyed. The remedial action should only minimally, if at all, require clearing and grubbing prior to system installation.

2.1.1 Protection of Trees

All trees which are to remain at the site that could be injured during operations will be protected by placing boards, planks or poles around them. No ropes, cables or guys will be attached or fastened to nearby trees for anchorage.

2.1.2 Restoration of Damaged Trees

Any trees or landscape features which are scarred or damaged during system installation will be replaced with equivalent, undamaged trees and landscape features. The Contracting Officer's approval will be obtained prior to replacing trees.

2.1.3 Protection of Water Resources

There are no stream crossings that must be traversed to reach the work site. However, there are two drainage ditches near the work area. These ditches may serve as a conduit for spilled liquid, directing the liquid away from the work area. In the event there is a release of liquid during the project, the station spill response procedures will be

implemented. These spill response procedures can be found in the Site Safety and Health Plan in Appendix A.

Prior to discharging any water to the sanitary sewer system, analytical results of the water will be provided to the Contracting Officer's representative. Approval will be requested from the Contracting Officer's representative and the local publically owned treatment works (POTW) prior to discharge.

2.2 REMOVAL OF TEMPORARY CONSTRUCTION FACILITIES

Once the remediation system is installed, all temporary facilities will be removed. All excavations in the paved area of the site will be repaved. All affected unpaved areas will be re-seeded.

2.3 PROTECTION OF FISH AND WILDLIFE RESOURCES

This work will not disturb fish or wildlife, alter water flows or otherwise significantly disturb the native habitat on or adjacent to the project.

2.4 WETLAND PROTECTION

No wetland areas will be disturbed while the remediation system is installed or operated.

2.5 HISTORICAL AND ARCHEOLOGICAL RESOURCES

Although no historical and archeological items or human skeletal remains are expected to be found, the Contracting Officer's representative will be notified immediately in the event any archeological items are encountered. Any items discovered will be carefully preserved and work stopped in the area until direction is received from the Contracting Officer to resume work.

2.6 DUST CONTROL

MK will maintain all excavations, stockpiles, access roads and other work areas free from excess dust to avoid causing a hazard. Dust control at the site is accomplished by wetting the soil or structure with a wetting spray.

2.7 EROSION CONTROL

Temporary erosion control measures will be utilized in excavation areas until permanent surface drainage is reestablished. The amount of bare soil exposed at any one time will be minimized and the excavation covered when work is not in progress.

3.0 REQUIRED REPORTS

The MK Project Manager, or his representative, will complete the following required reports as required:

- Daily Construction Report
- Daily Quality Control Report
- Daily/Weekly Safety Report
- Completion Report

Details of each required report can be found in other attachments to the Work Plan, specifically the Quality Control Plan in Appendix B. No other environmental protection reports are anticipated.

APPENDIX E
WASTE MANAGEMENT PLAN

1.0 INTRODUCTION

This plan details MK's approach to manage and dispose the various waste streams generated during the life of this project. All waste will be collected and stored on-site in appropriate containers or piles, analyzed for characterization purposes, and disposed of according to appropriate federal, state and local regulations.

MK is responsible for the following activities:

- ensure that all waste streams are managed in accordance with the procedures in this plan,
- provide field oversight to ensure subcontractor compliance with the procedures in this plan,
- ensure that appropriate waste containers and secondary containment are provided,
- preparing for CBC signature all required paperwork and documentation, including manifests, for all wastes generated during system installation and operation activities within the designated notification time,
- ensuring all waste containers are properly labeled, and
- maintaining waste records.

2.0 WASTE STREAMS

Waste streams expected to be generated during the life of the project include:

- soil,
- ground water,
- decontamination water,
- disposable personnel protective equipment and clothing, and
- inert wastes (wood, HDPE, etc.).

Waste generated during operation of the system are recovered free product, ground water (liquid), oil and water separator sludges, and air streams. Treatment and disposal of these waste streams will be addressed in the Operations and Maintenance Manual. Therefore, management of these waste streams are not addressed in this work plan.

2.1 EXCAVATED SOIL

Contaminated soil may be encountered during installation of monitoring wells and excavation of trenches for installation of piping. Drill cuttings will be containerized in 55-gallon drums as they are generated. Excavated soils from trench installation will be stored in 20 or 40 cubic yard roll-offs until the work is finished. The roll-offs will be lined. Prior to disposal, all soils will be characterized to determine their ultimate disposition. Analytical requirements for the soils are discussed below in Section 4.0 - Sampling and Analysis of Wastes.

2.2 PRODUCED GROUND WATER

Ground water produced during installation of monitoring wells will be collected in 55-gallon drums for characterization prior to ultimate disposal. Produced ground water should possess the same characteristics as the ground water which will ultimately be treated in the remediation system. However, to ensure that the produced ground water is of the same quality as the ground water to be treated by the system, the drums will be sampled and the water analyzed as described in Section 4.0 - Sampling and Analysis of Wastes.

2.3 DECONTAMINATION WATER

Decontamination water is generated during steam cleaning of drilling rig equipment and during manual decontamination of sampling equipment. All water used in decontamination will be collected in a temporary storage tank. The decontamination water could potentially be contaminated with benzene, toluene, ethylbenzene, xylenes and total petroleum hydrocarbons.

Since the decontamination water will contain low concentrations of the contaminants being remediated at the site, decontamination water will be treated in the remediation system and discharged to the POTW. If necessary, the decontamination water will be sampled and analyzed to determine the concentration of contaminants prior to introduction to the groundwater remediation system. The decontamination water will be analyzed for contaminants as described in Section 4.0 - Sampling and Analysis of Wastes.

2.4 DISPOSABLE PERSONNEL PROTECTIVE EQUIPMENT

Waste personnel protective equipment (PPE) includes disposable Tyvek suits, gloves, boots, respirator cartridges and visquene. The quantity of PPE generated depends upon the schedule and number of times PPE is discarded daily. Contaminated PPE will be placed in a plastic lined 55-gallon drum immediately after use. Drums will be transported to a landfill for ultimate disposal.

2.5 INERT WASTES

Inert wastes consist of construction debris, such as asphalt or concrete, generated during construction activities. These wastes will be placed into a 20 or 40 cubic yard roll-off for testing prior to disposal. Construction debris is generally a non-hazardous waste and can be disposed of in a non-hazardous waste landfill. Analytical requirements for inert wastes are discussed in Section 4.0 - Sampling and Analysis of Wastes.

3.0 SPILL PREVENTION AND CONTROL

The spill prevention and control guidelines for reporting and responding to spills involving oils and hazardous substances within the boundaries of the Gulfport Naval Construction Battalion Center is contained in the Site Safety and Health Plan, Appendix A.

4.0 SAMPLING AND ANALYSIS OF WASTES

The sampling procedures are based upon the guidelines set forth in USEPA SW-846, Test Methods for Evaluating Solid Waste, Third Edition, November, 1986. The numbers of samples, locations, procedures used in determining sampling locations, and justifications for sample locations are presented below.

4.1 SAMPLING OF LIQUIDS

Liquid samples which will be analyzed for organic parameters will be collected directly into the sample container. Liquid samples which will be analyzed for other constituents will be collected with a decontaminated sampling device, such as a stainless steel bucket, then transferred into the sample container. Liquid samples collected directly into the sample bottle will be taken with the bottle opening facing toward the water surface. All volatile organic vials will also be filled with the opening facing the water surface, with the cap being placed onto the vial while the container is submerged.

When a sample collection device is used to obtain the liquid sample, the samples will be placed in the sample bottle directly from the sampling device. If the volume required to fill the sample bottle exceeds the volume contained in the collection device, an aliquot from each sample retrieved will be placed in each sample bottle until all the bottles are filled. The sampling device will be lowered to the same depth when it takes more than one volume of the sample collection device to fill the bottles.

4.2 SAMPLING OF SOLIDS

All solid waste samples will be collected using a stainless steel spoon or a hand auger if necessary. The hand auger may be used to collect samples from roll-offs containing solid waste. A hand auger consists of a sample bucket attached to the bottom of a length of pipe that has a crossbar at the tip. A hole is drilled by turning this crossbar at the same time the operator presses the auger into the solid waste. The hand auger is driven

approximately two feet into the waste. When the hand auger is withdrawn from the sample area, a stainless steel spoon is used to obtain a sample from the sample bucket. The sample is then placed into the proper sample container. Decontaminated equipment will be used to collect the soil samples.

Soil samples may be composited for analysis by placing all samples collected from several drums into a stainless steel bowl and homogenizing with a stainless steel spoon or Teflon™ spatula. Large pebbles and cobbles should be removed from the sample. Composite samples for chemical analyses will be collected in the appropriate containers. Sample containers will be maintained and documented as described in Section 4.5 - Documentation and Chain-of-Custody Procedures.

4.3 DECONTAMINATION AND POST-SAMPLING PROCEDURES

Decontamination of equipment will take place at a specific decontamination zone designed at the site.

4.3.1 Sampling Equipment Decontamination

All non-disposable equipment (*i.e.*, hand auger and stainless steel spoons) will be decontaminated according to the procedures summarized below:

- Manual scrub with Alconox™ soap solution plus tap water wash;
- Tap water rinse;
- Distilled/Deionized water rinse;
- 10% nitric acid rinse (for metals only);
- Distilled/Deionized water rinse;
- Isopropanol or acetone rinse (for organics only); and
- Air dry.

4.3.2 Sample Preparation and Preservation

Immediately after collection, samples will be transferred to properly labeled sample containers with all necessary preservatives added. Table E-1 lists the proper container material, volume requirement, and preservation needed for the site investigation. Samples requiring refrigeration for preservation will be immediately transferred to coolers packed with ice or ice packs. Proper chain-of-custody documentation will be maintained as discussed below in Section 4.5 - Documentation and Chain-of-Custody Procedures.

4.4 ANALYTICAL LIST

Table E-2 is a summary of the waste samples which will be analyzed, broken down by waste stream and analytical parameters. The parameters selected are based upon ultimate disposition of the waste.

4.5 DOCUMENTATION AND CHAIN-OF-CUSTODY PROCEDURES

Samples will be labeled, preserved, and properly packaged for shipment to the analytical laboratory. Information on the sample label will include:

- Sample identification number;
- Name of the individual collecting sample;
- Date and time of sampling;
- Place of collection; and
- Analyses to be performed on the sample.

Sample identification numbers will be used to provide a tracking procedure allowing information on a particular sample location to be easily and accurately retrieved. This system also ensures that each sample is unique and not confused with any other sample. The Project Manager will maintain a complete list of sample numbers. The sample identification number consists of eight digits that represent the following information:

- Site name;
- Sample matrix;
- QC sample type (when applicable);
- Sample location number; and
- Sample interval or depth (when applicable).

The project will utilize a specific prefix, XXX, separated from the sample identification number with a backslash (*e.g.*, XXX\12345678). The laboratory will not use the site-specific prefix.

The first three digits indicate the sample origin. These digits are alphanumeric and are created with some mnemonic device for the true name of the site. The first digit is an alphabetical character in order to facilitate data processing. Sample origin abbreviations are developed according to specific project requirements. Examples are given below:

- Tank #10 - T10
- SWMU #9 - S09
- Background - B01

The type of installation is represented by digits 4, 5 and 6. Designations for a well or boring installation is made by using a "W" or "B" respectively in the fourth digit, followed by the two digit sample location identifier. The sample location identifier is a number assigned to the specific well or borehole.

The seventh and eighth digits are matrix-dependent and represent sample intervals for soil samples or sample identifiers for groundwater samples. For groundwater samples, each sample is given a number by sequential collection. Duplicate samples have the same sample identification, but contain the letter "D" in place of the eighth digit. For example:

- XXX\S11B0901 represents the first soil sample from SWMU 11 at boring #9.
- XXX\P12W0702 represents the second groundwater sample collected from well #7 at plume #12.
- XXX\P12W072D represents a duplicate of the above example.

QC samples are numbered by replacing digit 4 with the proper QC sample code, listed below, followed by the month and day it was collected as digits 5,6,7 and 8. For example, August 14 would appear in the last four digits of the sample identification number as 0814. QC sample codes used during the project are:

- F - field blank
- E - equipment rinsate
- T - trip blank

The sample number is entered on sample labels, chain-of-custody forms, and in the appropriate section of the Testing Plan and Log found in the QC Plan. All sample identification information will also be documented in the sampler's field logbook, especially information not incorporated in the sample number.

Samples will be placed in shipping containers that are locked or sealed for shipment to the laboratory. Custody seals will be affixed to the sealed shipping container and/or individual sample containers. Information on the custody seal will include the date when the container was sealed and the signature of the sampler or relinquisher. Broken custody seals will be noted in the remarks section of the chain-of-custody record.

All information pertinent to field surveys or samples will be recorded in the logbook as a permanent record. The minimum entries in the logbook will include:

- Client description and address;
- Name and address of field contact;
- Location of sampling point;
- Description of sample origination and known characteristics; and
- Sample identification and volume collected.

All sample shipments will be accompanied by a chain-of-custody record. The chain-of-custody record includes the following information:

- Package contents;
- Sample identification numbers;
- Sample location;
- Date and time of sample collection;
- Analytical tests for each sample; and
- Appropriate project identification information.

The chain-of-custody record will be completed with information and wording consistent with information and wording reported on sample labels and seals.

When transferring custody the sampler will record the time and date and sign the chain-of-custody form in the "relinquished by" block. The receiver will sign "received by" block upon sample receipt. The original chain-of-custody record will accompany the shipment, and a copy will be retained by the Project Manager or designee. A signed chain-of-custody record will obtained from the laboratory custodian after the samples have been received and their condition checked.

5.0 PACKAGING AND TRANSPORTATION

5.1 PACKAGING

Nonhazardous materials dispositioned for shipment will be packaged in the appropriate container specified by the Department of Transportation (DOT). Should it become necessary to use a non-standard container, MK or its subcontractor will obtain approval of the receiving facility prior to packaging any material.

Materials will be packaged and prepared for shipping in a manner that is protective of workers, the public, and the environment. Waste will be packaged according to the requirements in 49 CFR 173.24 "General requirements for packaging and packages".

All containers will be sealed or otherwise protected against weather after they have been filled and placed in a proper storage or staging area.

All containers will be chosen to be compatible with the materials to be contained, prior to use.

5.2 TRANSPORTATION

Nonhazardous wastes will be transported in the conventional manner using roll-offs or other waste containers which will be labeled as "NONHAZARDOUS". Shipping papers will include the shipping manifest specified by the landfill of final destination. In addition, any nonhazardous contaminated soils will be accompanied by the waste characterization data as specified by the landfill of final destination. See Section 4.0, Sampling and Analysis for parameters to be analyzed.

TABLE E-1 ANALYTICAL PARAMETERS				
Compound	**Analytical Method**	**Container Type**	**Volume of Sample**	**Preservation**
BTEX - Liquid	8240	40 mL glass VOA vial	80 mL (2 vials)	Refrigerate at 4°C; HCL to pH <2
TPH - Liquid	418.1 IR	1 L glass bottle	1 L	Refrigerate at 4°C; HCL to pH <2
BTEX - Solid	8240	4 oz. glass jars	8 oz. (2 jars)	Refrigerate at 4°C
TPH - Solid	418.1 IR	1 L glass jar	1 L	Refrigerate at 4°C
TCLP Metals	1311/6010	150 g glass jar	150 g	None
TCLP Pest/Herb	1311 8080 & 8150	150 g glass jar	150 g	None
Full TCLP	1311/8240, 8270, 8080, 8015, 6010	220 g glass jar	200 g	None
Ignitability	EPA 7.1.2.2	250 mL glass jar	250 mL	Refrigerate at 4°C
Reactive Cyanides and Sulfides	EPA 7.3.3.2 & 7.3.4.1	250 mL glass jar	500 mL (2 jars)	Refrigerate at 4°C
pH	9045	250 mL glass jar	250 mL	Refrigerate at 4°C
Paint Filter Test	9095	1 L glass	1 liter	None

TABLE E-2 SUMMARY OF ANALYTICAL REQUIREMENTS	
Waste Stream	**Analytical Parameters**
Excavated soil	BTEX, TPH, TCLP metals, TCLP pesticides & herbicides, Ignitability, Reactivity, pH, Paint filter test
Produced groundwater	BTEX, TPH
Decontamination water	BTEX, TPH
Inert wastes	Full TCLP, Ignitability, Reactivity, pH, Paint filter test

APPENDIX F
SUBCONTRACTING PLAN

1. Recovery Trench Construction

2. Civil/Electrical/Mechanical (including vaults, conveyance trench, equipment compound and effluent discharge, transportation and disposal of waste).

3. Piezometer Installation.

4. Treatment System Procurement.

5. Laboratory Testing.

6. Construction QC Testing.

7. O&M.