N62604.AR.000470
NCBC GULFPORT
5090.3a

COMPLETION REPORT FOR SEEP FILTRATION SITE 4 NCBC GULFPORT MS

5/1/1998

MORRISON KNUDSEN CORPORATION

NCBC Gulfport Administrative Record
Document Index Number

39501 - IRP
18.02.04.0003

Completion Report
Seep Filtration at Site 4

CBC Gulfport
Gulfport, Mississippi

Unit Identification Code: N62604
Contract No. N62467-93-D-1106

May 1998

Southern Division
Naval Facilities Engineering Command
North Charleston, South Carolina
29419-9010

COMPLETION REPORT
FOR
SEEP FILTRATION AT SITE 4

CBC GULFPORT
GULFPORT, MISSISSIPPI

Revision 0

May 07, 1998

CONTRACT N62467-93-D-1106
DELIVERY ORDER #0002
STATEMENT OF WORK #09

Prepared for

SOUTHERN DIVISION
NAVAL FACILITIES ENGINEERING COMMAND
2155 Eagle Drive
P.O. Box 190010
North Charleston, South Carolina 29419-9010

Prepared by:

MORRISON KNUDSEN CORPORATION
2420 Mall Drive
Corporate Square 1 - Suite 211
North Charleston, South Carolina 29406

PREPARED/APPROVED BY:

Han Maung
MK Project Engineer

02 Nov '98
Date

APPROVALS:

R. Scott Newman
MK Program Manager

03 Nov 98
Date

EXECUTIVE SUMMARY

This Completion Report provides a brief description of field activities and presents the results of seep filtration work performed at Site 4 of the Construction Battalion Center (CBC) in Gulfport, Mississippi. The main objective of the seep filtration was to control migration of dioxin and furans through the seeps into the canal. It is a temporary measure to control possible off-site migration of dioxin until ongoing site investigations are completed.

The filtration system was constructed for two seeps at Site 4. The system consisted of activated carbon beds placed on the seep areas to allow filtration of dioxin and furans. Filter fabric and gabion mattresses or topsoil were placed over the carbon beds to provide erosion control and site restoration.

Morrison Knudsen Corporation (MK) was responsible for performing field work and laboratory analyses. The construction of seep filtration systems was started on 01 March 1998 and site restoration was completed on 14 March 1998. A sample was collected from each seep area on 02 April 1998 and analyzed for dioxin and furans. The main components of concern at the sites, 2,3,7,8-tetrachlorodibenzo-p-dioxin (TCDD) and pentachloro-dibenzodioxin (PeCDD), were not detected in the samples collected, indicating that the constructed filtration system was effective in controlling migration of dioxin and furans.

As part of continued monitoring effort of the filtration system, seep sampling will be performed on a quarterly basis. Quarterly sampling will depend on seepage, which may not occur in dry seasons.

TABLE OF CONTENTS

SECTION		PAGE
EXECUTIVE SUMMARY		i
ACRONYMS AND ABBREVIATIONS		iv
1.0	INTRODUCTION	1-1
1.1	BACKGROUND AND OBJECTIVES	1-1
1.2	PLANNING DOCUMENTS	1-1
2.0	SITE BACKGROUND	2-1
3.0	FIELD ACTIVITIES	3-1
3.1	INTRODUCTION	3-1
3.2	SITE PREPARATORY WORK	3-1
3.3	FILTRATION SYSTEMS	3-1
3.3.1	Filtration System for Seep A	3-1
3.3.2	Filtration System for Seep B	3-1
3.4	DECONTAMINATION	3-2
3.5	WASTE MANAGEMENT	3-2
3.6	FIELD CHANGES	3-2
4.0	ANALYTICAL RESULTS	4-1
4.1	LABORATORY ANALYSIS	4-1
4.2	DATA QUALITY CONTROL	4-1
4.2.1	Field Quality	4-1
4.2.2	Laboratory Quality Control	4-1
5.0	CONCLUSIONS	5-1
5.1	CONCLUSIONS	5-1
6.0	REFERENCES	6-1

LIST OF TABLES

TABLE		PAGE
3-1	FCR LIST	3-6
4-1	SUMMARY OF ANALYTICAL RESULTS	4-3

LIST OF FIGURES

FIGURE		PAGE
2-1	SITE MAP	2-2
2-2	SEEP LOCATION MAP	2-3
2-3	PRECONSTRUCTION CONDITION - SEEP A	2-4
2-4	PRECONSTRUCTION CONDITION - SEEP B	2-5
3-1	AS-BUILT FILTRATION SYSTEM AT SEEP A	3-3
3-2	FRENCH DRAIN	3-4
3-3	AS-BUILT FILTRATION SYSTEM AT SEEP B	3-5

APPENDICES

APPENDIX		PAGE
A	PERMITS, NOTIFICATIONS AND CERTIFICATIONS	A-1
B	PROJECT PHOTOGRAPHS	B-1
C	FIELD CLARIFICATION REQUESTS	C-1
D	LABORATORY RESULTS	D-1
E	CHAIN-OF-CUSTODY FORMS	E-1

ACRONYMS AND ABBREVIATIONS

A&S	A&S Environmental Services
ABB-ES	ABB Environmental Services
CBC	Construction Battalion Center
COC	chain-of-custody
FCR	Field Clarification Request
HO	herbicide orange
LCS	laboratory control sample
LCSD	laboratory control sample duplicate
MDEQ	Mississippi Department of Environmental Quality
MK	Morrison Knudsen Corporation
MS	sample matrix spike
MSD	sample matrix spike duplicate
NCF	Naval Construction Force
NPDES	National Pollution Discharge Elimination System
NTR	Navy Technical Representative
PeCDD	pentachloro-dibenzodioxin
POTW	publicly owned treatment works
PPE	personnel protective equipment
ppq	parts per quadrillion
PVC	polyvinyl chloride
QC	quality control
RCRA	Resource Conservation and Recovery Act
ROICC	Resident Officer-in-Charge of Construction
SOUTHNAVFACENGCOM	Southern Division Naval Facilities Engineering Command
TCDD	2,3,7,8-tetrachlorodibenzo-p-dioxin

1.0
INTRODUCTION

1.1 BACKGROUND AND OBJECTIVES

This Completion Report has been prepared by Morrison Knudsen Corporation (MK) for Southern Division, Naval Facilities Engineering Command (SOUTHNAVFACENGCOM), under contract number N62467-93-D-1106, Delivery Order 0002, Statement of Work 09.

This Completion Report provides a brief description of field activities performed for construction of a seep filtration system at Site 4 of the Construction Battalion Center (CBC) Gulfport, Mississippi. The main objective of the seep filtration was to control migration of dioxin and furans through the seeps into the canal. It is a temporary measure to control possible off-site migration of dioxin until ongoing site investigations are completed.

MK was responsible for performing the field work and laboratory analyses. The construction of the seep filtration system was performed from 01 March 1998 to 14 March 1998. Seep samples were collected on 02 April 1998. Decontamination water and personnel protective equipment (PPE) were disposed of on 06 May 1998. MK's subcontractors were A&S Environmental Services (A&S) and Southwest Laboratory of Oklahoma, Inc. for the construction and analytical laboratory services, respectively.

The Navy Technical Representative (NTR) and Resident Officer-in-Charge of Construction (ROICC) provided oversight during field activities. The ROICC was provided with the Daily Reports and Government Quality Assurance Reports.

1.2 PLANNING DOCUMENTS

The following documents were used to plan the seep filtration work.

Work Plan for Seep Filtration at Site 4, Revision 0, [MK 1998], including:

- Appendix A, *Site Safety and Health Plan*
- Appendix B, *Quality Control Documentation*
- Appendix C, *Environmental Protection Plan*
- Appendix D, *Waste Management Plan*

The *Work Plan* describes the definable features of work that were performed for the seep filtration work.

2.0
SITE BACKGROUND

As shown on Figure 2-1, CBC Gulfport is located in the city of Gulfport, in Harrison County, in the southeastern corner of the State of Mississippi. CBC Gulfport supports four Naval Mobile Construction Battalions and serves as the focal point for deployment of Naval Construction Force (NCF) personnel for the Atlantic Fleet battalions.

The location of Site 4 is shown in Figure 2-2. It is an inactive fill site where the club house, the golf course practice putting green and number nine green are currently located. An estimated 16,000 tons of solid waste (as currently defined by the Resource Conservation and Recovery Act (RCRA)) were disposed of at Site 4 by trench-and-fill operations from 1966 to 1972. Site records establish that other on-base areas received hazardous wastes (as currently defined by the implementing regulations of RCRA) or constituents derived from hazardous wastes during normal site operations. However, available records neither establish nor exclude the possibility that hazardous wastes or constituents derived from hazardous wastes may also have been disposed of at Site 4 during this time period by trench-and-fill operations. Ten feet of fill was reportedly placed over the site waste. A canal runs across the site from the southwest corner toward the north.

MK performed a detailed geophysical investigation at Site 4 to evaluate the subsurface anomalies [MK, 1995]. The results of geophysical investigation indicated the presence of buried metallic materials at the site.

ABB Environmental Services (ABB-ES) collected two seep samples along the east bank of the canal as part of the Phase 1 sampling effort [ABB-ES, 1997]. Laboratory analyses of the samples determined that dioxin and furans were present in the seeps and 2,3,7,8-tetrachlorodibenzo-p-dioxin (TCDD) was detected at 14.1 parts per quadrillion (ppq) in one of two samples. The presence of TCDD and pentachloro-dibenzodioxin (PeCDD) in the seeps indicated herbicide orange (HO) as the potential source of dioxin and furans [ABB-ES, 1997]. However, no analyses for 2,4,5-trichlorophenoxyacetic acid and 2,4-dichlorophenoxyacetic acid, the principal components of HO, were performed.

The locations of two seeps along the bank of the canal are shown on Figure 2-2 and the preconstruction condition of the seeps are shown on Figures 2-3 and 2-4.

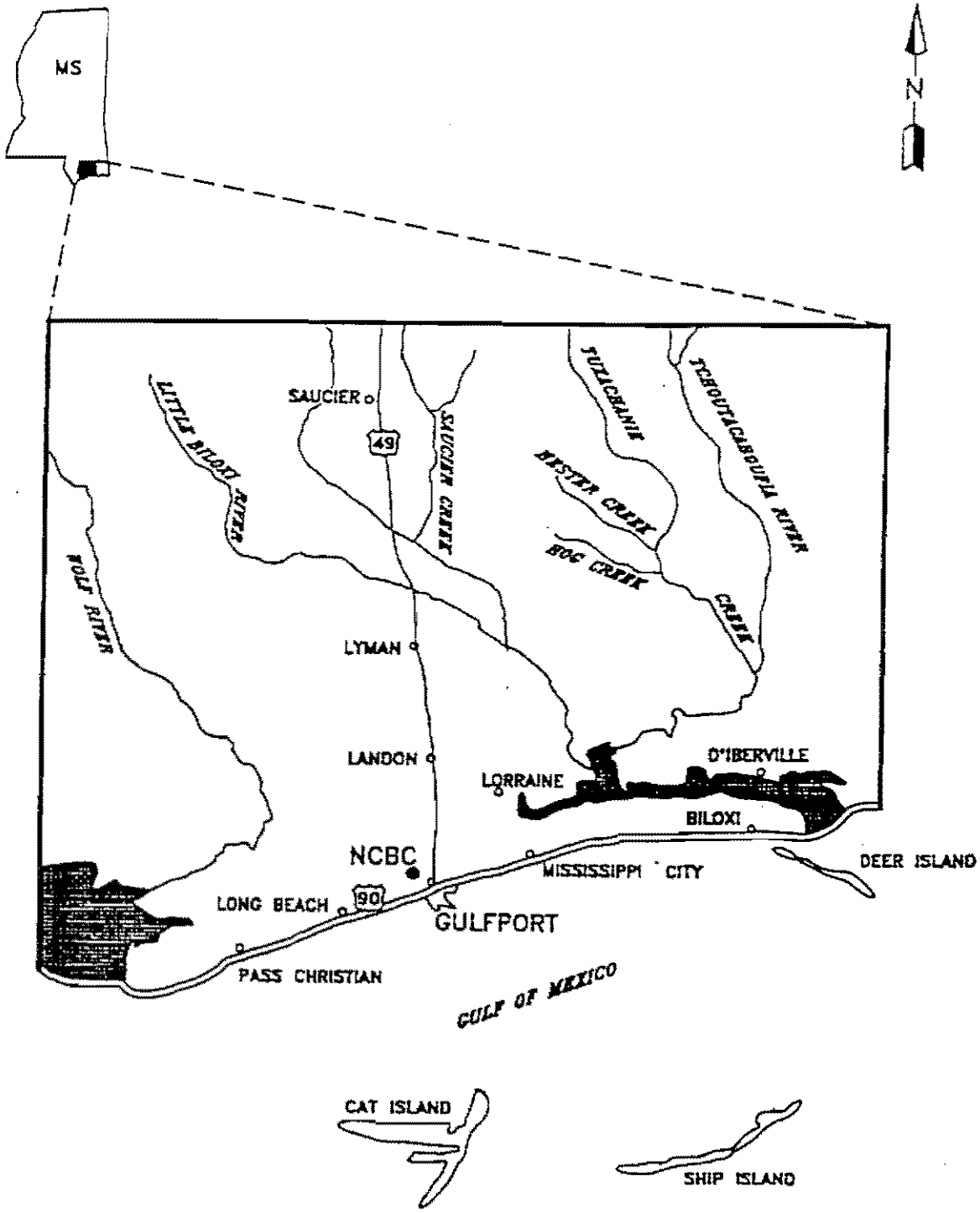

FIGURE 2-1
SITE MAP

MORRISON KNUDSEN CORPORATION
1500 WEST 3RD STREET
CLEVELAND, OHIO 44113-1406
PHONE: (216) 523-5600 FAX: (216) 523-5201

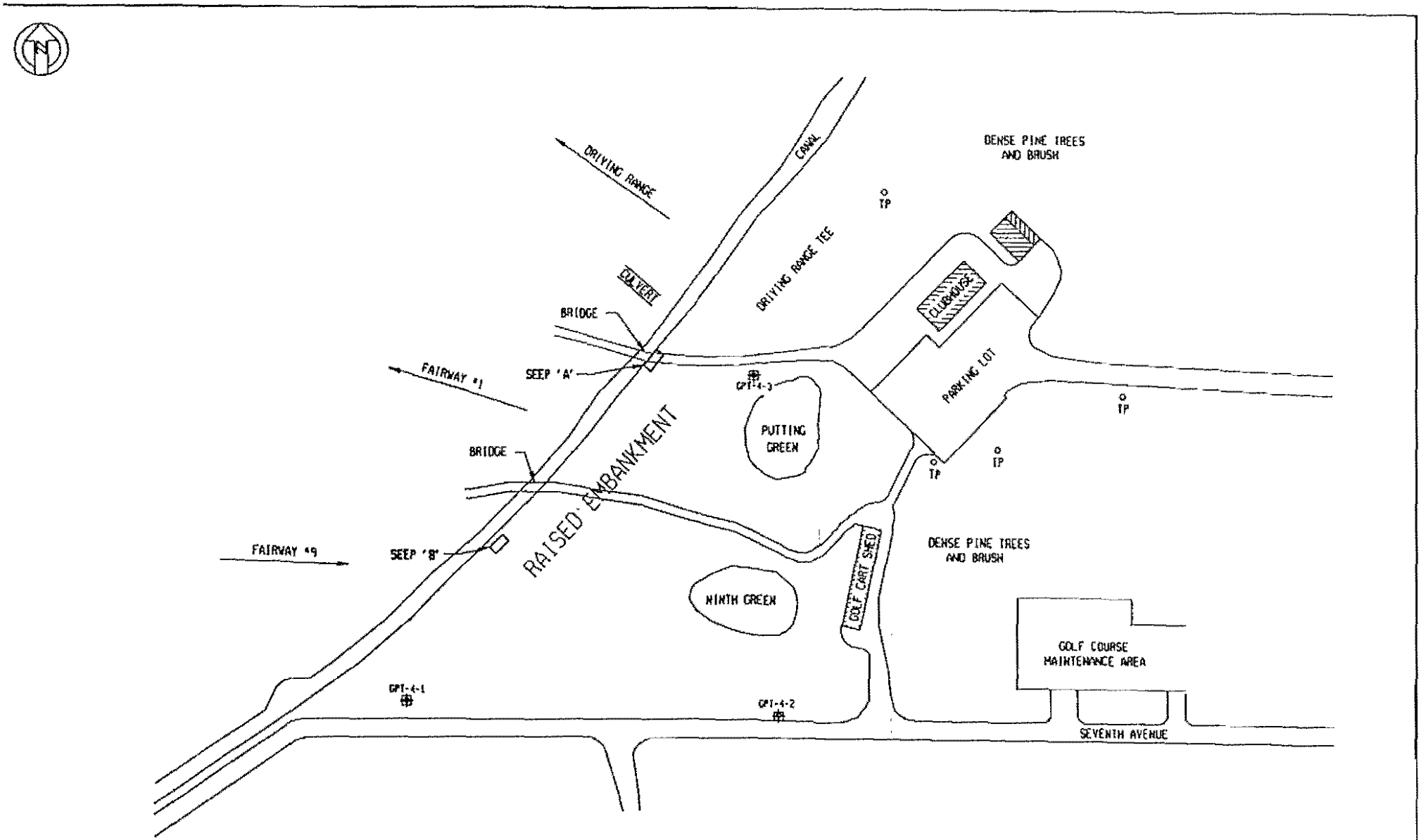

LEGEND

- o TP — TELEPHONE POLE
- CULVERT
- GPT-4-1 — MONITOR WELL
- BUILDING

0 100 200 FT

SCALE

FIGURE 2-2
SEEP LOCATION MAP

MORRISON KNUDSEN CORPORATION
1500 WEST 3RD STREET
CLEVELAND, OHIO 44113-1406
PHONE: (216) 523-5600 FAX: (216) 523-5201

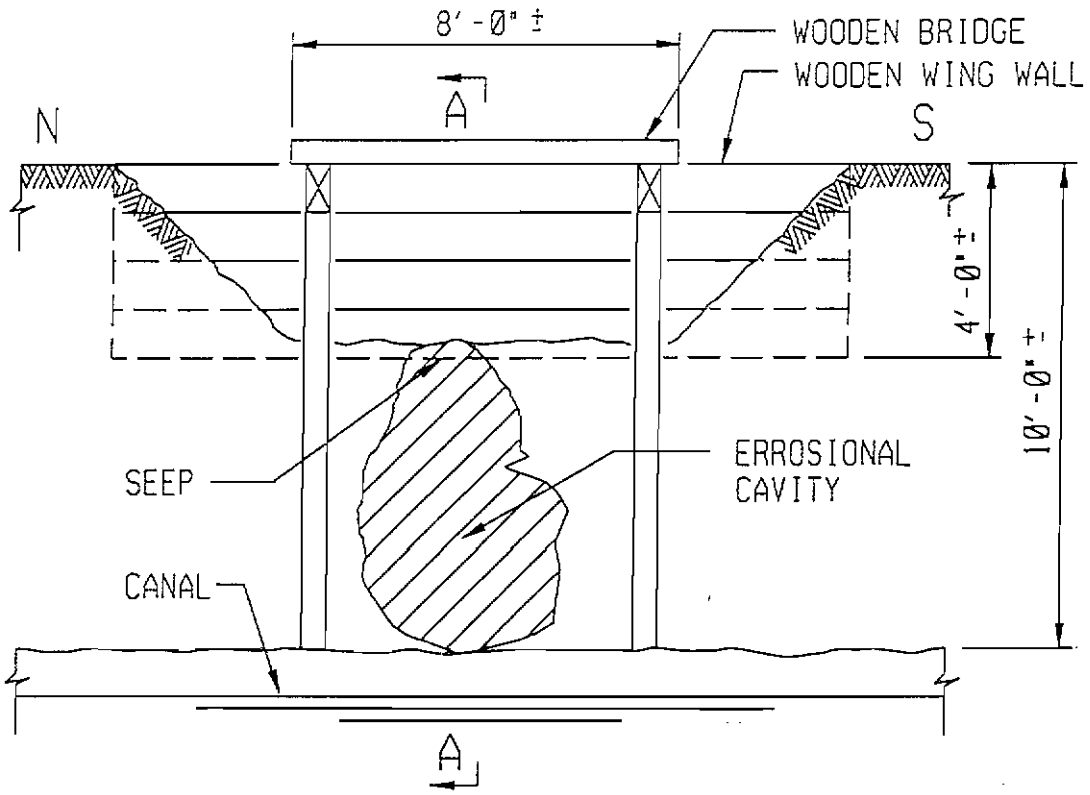

ELEVATION LOOKING EAST N.T.S.

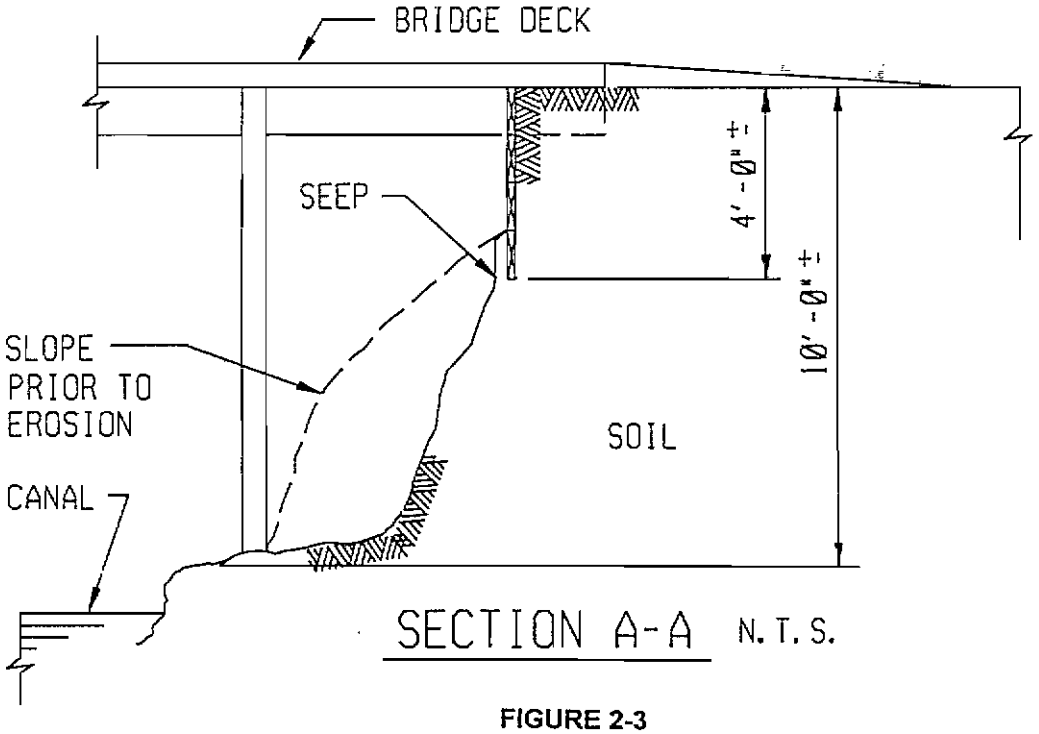

SECTION A-A N.T.S.

FIGURE 2-3
PRECONSTRUCTION CONDITION - SEEP A

MORRISON KNUDSEN CORPORATION
1500 WEST 3RD STREET
CLEVELAND, OHIO 44113-1406
PHONE: (216) 523-5600 FAX: (216) 523-5201

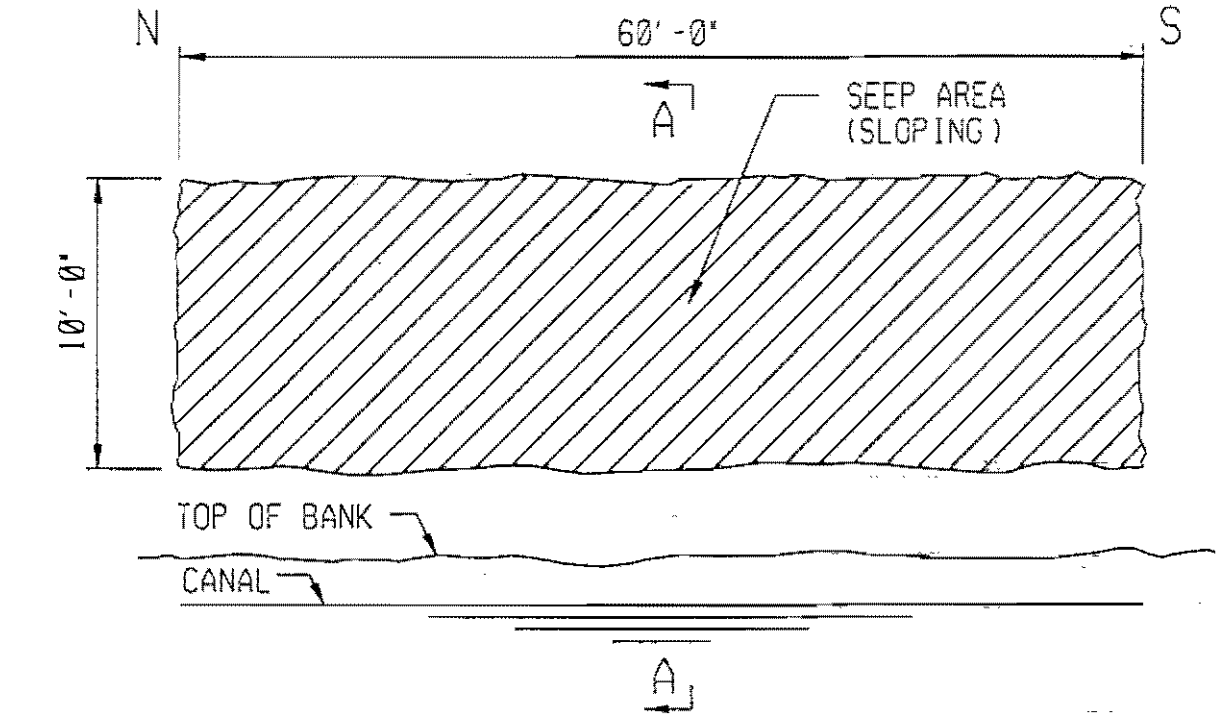

ELEVATION LOOKING EAST N.T.S.

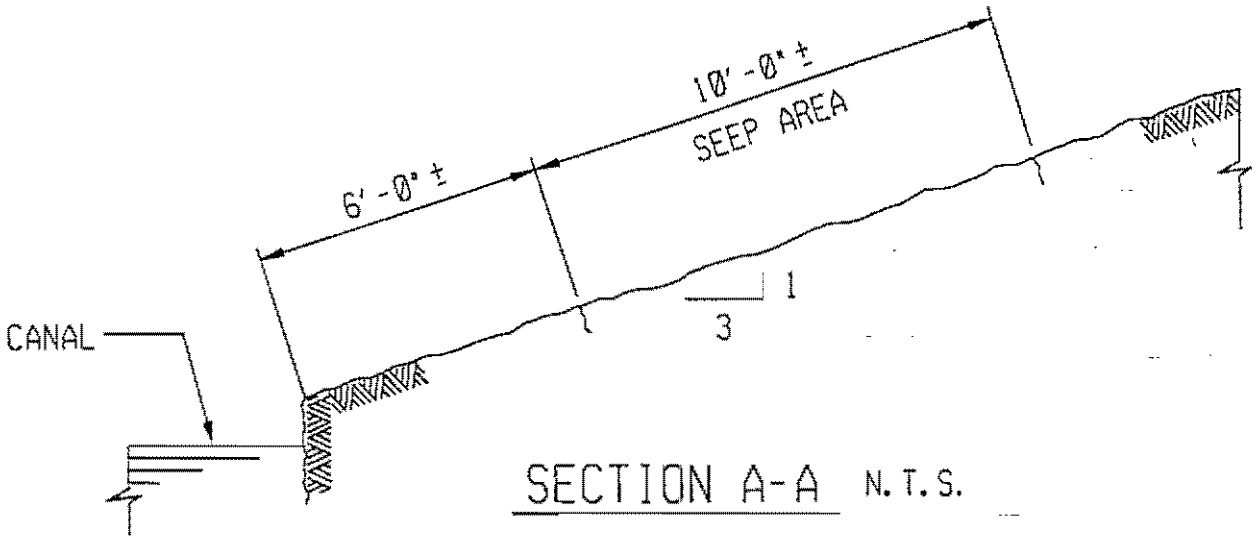

SECTION A-A N.T.S.

FIGURE 2-4
PRECONSTRUCTION CONDITION - SEEP B

MORRISON KNUDSEN CORPORATION
1500 WEST 3RD STREET
CLEVELAND, OHIO 44113-1406
PHONE: (216) 523-5600 FAX: (216) 523-5201

3.0
FIELD ACTIVITIES

3.1 INTRODUCTION

Prior to the start of field work, an agreement for waiver of National Pollution Discharge Elimination System (NPDES) Permits was obtained from the Mississippi Department of Environmental Quality (MDEQ). An excavation permit was also obtained from the Public Works Department of CBC Gulfport. Copies of the agreement and excavation permit are provided in Appendix A.

3.2 SITE PREPARATORY WORK

A preconstruction meeting was held at the site on 24 February 1998. The preconstruction meeting was attended by the NTR, ROICC, CBC Environmental Program Manager, CBC Golf Course Manager and representatives from MK and A&S. Construction material and equipment were mobilized and staged at the golf course maintenance area.

3.3 FILTRATION SYSTEMS

The construction of the filtration systems commenced on 01 March, 1998. After construction was started, several days of heavy rain flooded the site and the work was stopped. Field work was restarted after the rain had subsided and the construction was completed on 14 March, 1998. Photographs of the construction activities are provided in Appendix B. A Certificate of Satisfactory Completion signed by ROICC and MK representative is provided in Appendix A.

3.3.1 Filtration System for Seep A

An earthen embankment was constructed of soil provided by CBC Gulfport. Soil was compacted during placement in loose lifts of less than six inches. A one-inch diameter polyvinyl chloride (PVC) pipe was inserted through the embankment to act as a sampling port for the seep. Bentonite was used to provide a seal around the PVC pipe. The PVC pipe was screened and capped at one end and filled with granular activated carbon. Granular activated carbon was placed behind the embankment until the scoured area was filled. Filter fabric was placed over the granular activated carbon bed and the soil embankment. Gabions mats were placed on the filter fabric to prevent erosion and scouring. The gabion wire mesh was provided by CBC Gulfport from the excess materials storage yard. Riprap was placed to cover the areas around the gabion mattresses to provide a smooth finish. The as-built filtration system at Seep A is shown on Figure 3-1.

During heavy rain, it was observed that the surface water was draining from the golf course area toward Seep A. To divert the flow of surface water away from the seep area, a French drain was constructed as shown on Figure 3-2.

3.3.2 Filtration System for Seep B

Though Seep B was located on the ninth fairway, the construction at Seep B was performed without impeding any golfing in progress. Therefore, most of the construction work was restricted to early mornings from 0600 to 0900 hrs or late in the afternoons after 1700 hrs.

Prior to any excavation, a silt fence was installed at the site. An embankment backer was constructed using crushed rock wrapped in wire mesh. The size of crushed rock was limited to four to six inches. The backer was held in place using 18-inch long stakes spaced at two-foot intervals. Existing sod, topsoil and

surficial soil were excavated and compacted to form the embankment and the cover above the rock backer. Nine two-inch diameter PVC pipes were placed underground. Each pipe was spaced about five feet apart and filled with granular activated carbon. The pipes were slotted and capped at the exposed end to allow drainage. A layer of activated carbon was placed over the excavated area. Filter fabric and top soil were placed on the activated carbon bed. The area was restored using sod from off-site source and the silt fence was removed. The as-built filtration system at Seep B is shown on Figure 3-3.

3.4 DECONTAMINATION

A temporary decontamination station was constructed at the golf maintenance area. Decontamination was performed on a six-foot by eight-foot tarpaulin which was held down by galvanized spikes in place. The decontamination liquid was collected for sampling and disposal.

3.5 WASTE MANAGEMENT

The waste streams produced during the field work were PPE and the decontamination liquid. The PPE was collected in drums and disposed of at a sanitary landfill. A sample of the decontamination liquid was collected and shipped to the off-site laboratory. Based on the laboratory results, approval was obtained from the publicly owned treatment works (POTW) for disposal of the decontamination liquid. The decontamination liquid was disposed of at the onsite sanitary sewer system for eventual treatment at the POTW.

3.6 FIELD CHANGES

Field work was performed in accordance with the *Work Plan*. Changes to the *Work Plan* were approved by the NTR prior to commencement of the work as documented in the Field Clarification Request (FCR) provided in Appendix C. Table 3-1 provides a list of FCRs including the reason and resolution for the field change.

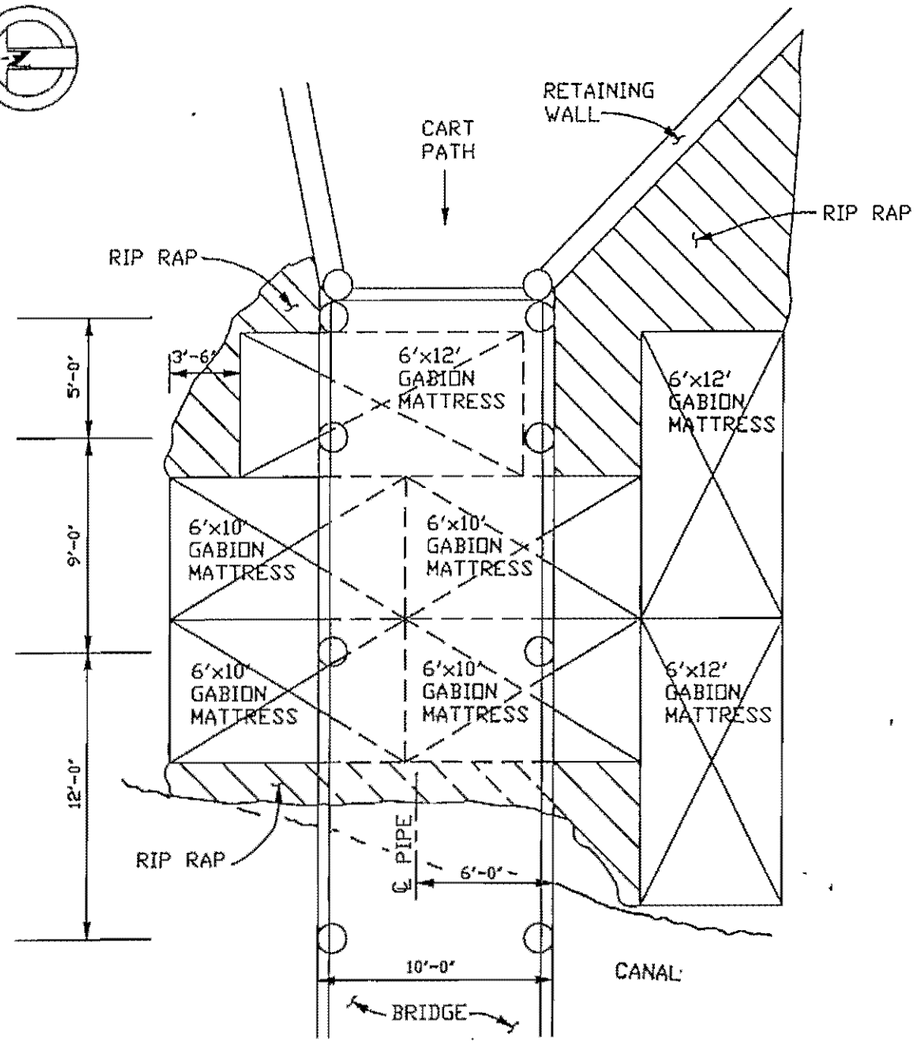

PLAN VIEW

N.T.S.

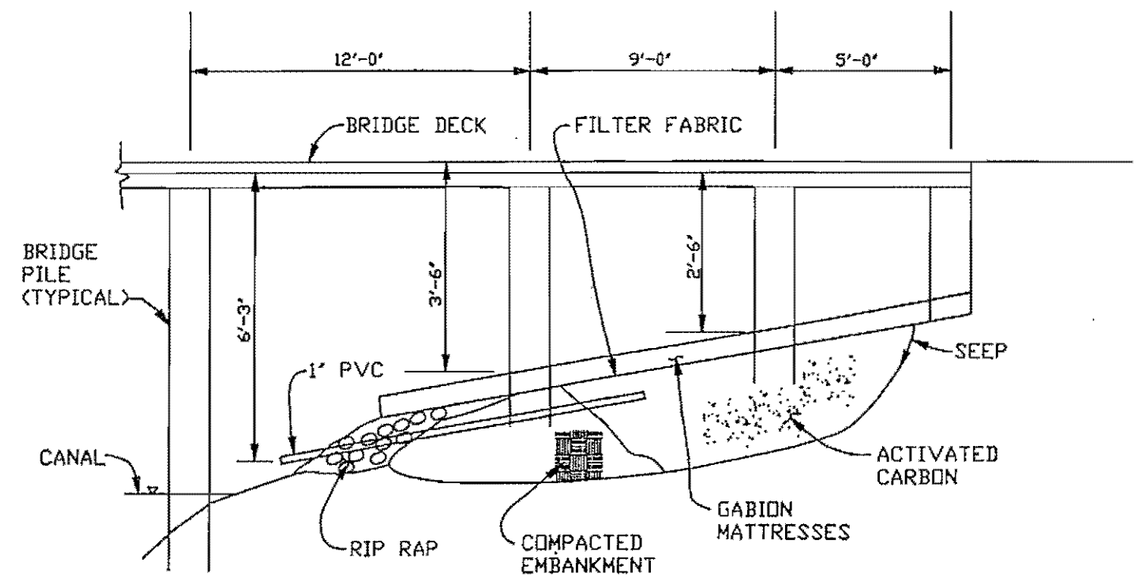

ELEVATION VIEW
LOOKING NORTH

N.T.S.

FIGURE 3-1
AS-BUILT FILTRATION SYSTEM AT SEEP A

MORRISON KNUDSEN CORPORATION
1500 WEST 3RD STREET
CLEVELAND, OHIO 44113-1406
PHONE: (216)523-5600 FAX: (216)523-5201

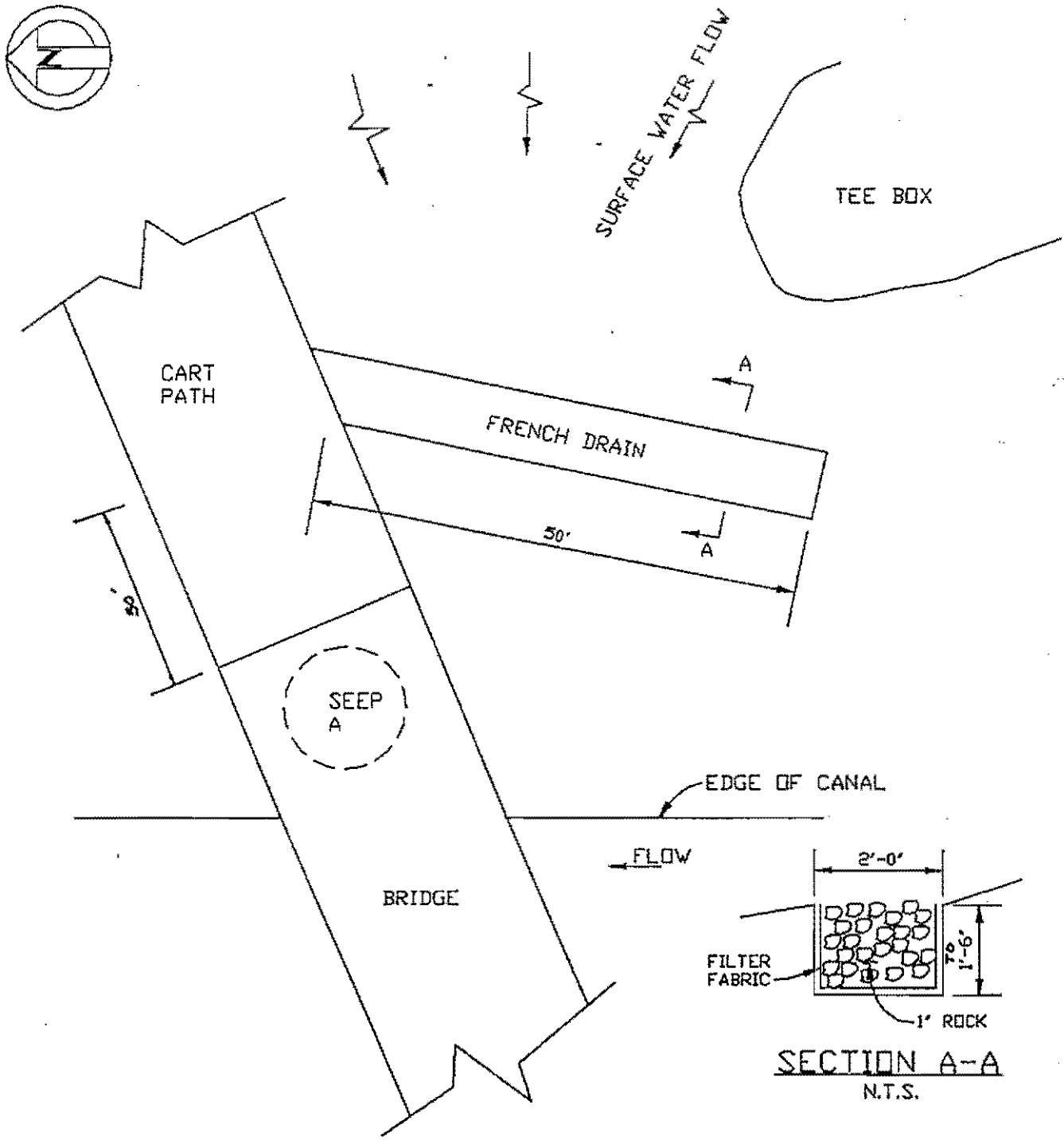

SEEP A PLAN

N.T.S.

FIGURE 3-2
FRENCH DRAIN

MORRISON KNUDSEN CORPORATION
1500 WEST 3RD STREET
CLEVELAND, OHIO 44113-1406
PHONE: (216)523-5600 FAX: (216)523-5201

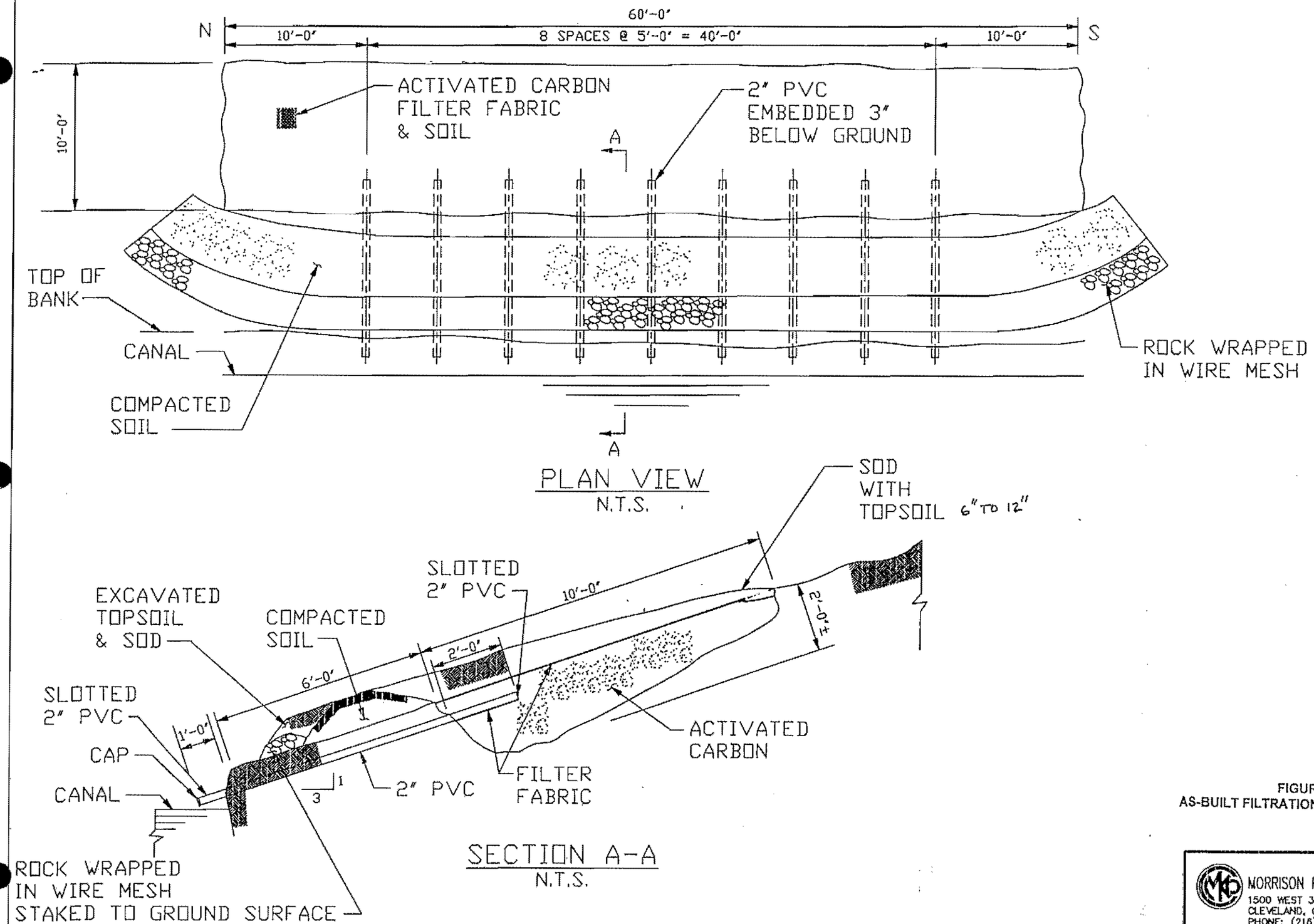

FIGURE 3-3
AS-BUILT FILTRATION SYSTEM AT SEEP B

MORRISON KNUDSEN CORPORATION
1500 WEST 3RD STREET
CLEVELAND, OHIO 44113-1406
PHONE: (216)523-5600 FAX:(216)523-5201

TABLE 3-1 FCR LIST		
FCR NUMBER	**PROBLEM/CHANGE DESCRIPTION**	**RESOLUTION**
02-001	Seep B area was very wet and soft and the existing ground cover cannot be sodded into rolls.	The existing ground cover was used to build the berm. Sod from off-site source was used for site restoration.
02-002	Actual location of Seep B was not defined.	The location of Seep B was defined by visual site verification and discussions with ABB-ES.
02-003	Seep B area was very wet and soft and unsuitable for a stable earthen embankment.	Wire mesh filled with crushed rock was placed on the toe of the embankment to enhance stability.
02-004	The proposed hay bales used for silt fence are likely to be contaminated and require disposal.	Silt fence made from geofabric materials was used.
02-005	The gabion baskets were not locally available.	The excess wire mesh for gabion stored at CBC Gulfport was used to construct gabion mattress.
02-006	Surface water drained to Seep A area during precipitation.	A French drain was constructed to divert surface water away from Seep A area.

4.0
ANALYTICAL RESULTS

4.1 LABORATORY ANALYSIS

Laboratory analyses were performed on decontamination liquid and seep water samples. The results of the laboratory analyses are provided in Appendix D and summarized in Table 4-1. The decontamination liquid sample (009-DC) was analyzed for dioxin/furans, volatile organics, semi-volatile organics, pesticides, herbicides, metals, pH, ignitability, corrosivity and reactivity. The seep water samples (A01 from Seep A and B01 from Seep B) were analyzed for dioxin and furans. The seep water samples were non-detect for TCDD and PeCDD, the main components of concern at the sites.

4.2 DATA QUALITY CONTROL

All data were verified and compared with field and laboratory quality control (QC) sample data to assess the data's usability. The results of this data verification and validation are presented in this section.

Data associated with the decontamination liquid and the two seep water samples were verified by reviewing chain-of-custody (COC) forms (See Appendix E), sample preservation records, analytical holding times, requested turnaround times, sample data in comparison to QC data, and reporting requirements. Samples were received by the laboratory in good condition (i.e., there were no broken containers, and custody seals were intact). The decontamination sample was received at a temperature of 4°C $\pm$ 2°C and the seep samples were received at 8°C.

4.2.1 Field Quality Control

Analytical results for the trip blanks were evaluated to identify potential sources of error introduced during sampling, transportation and storage. A trip blank was analyzed for volatile organic compounds to evaluate the potential for cross-contamination during shipping to the laboratory. The trip blank was received from the laboratory in a sealed container containing organic-free water, held intact at the site, and shipped back to the laboratory with the samples. Volatile compounds were not detected in the trip blank, indicating that no volatile organic cross-contamination occurred during shipping or storage.

4.2.2 Laboratory Quality Control

The laboratory performed a method blank, sample matrix spike (MS), sample matrix spike duplicate (MSD), surrogate, laboratory control sample (LCS), and laboratory control sample duplicate (LCSD) analyses to evaluate laboratory accuracy and precision.

Laboratory method blanks were prepared and analyzed with the samples in order to evaluate potential target compounds or interferences from laboratory glassware, reagents and/or solvents used in the preparation and analysis of samples. Laboratory method blanks did not show the presence of any target analytes above the reporting limits. Results of the method blanks were acceptable for all analyses.

The LCS and LCSD are samples prepared in the laboratory, consisting of clean water spiked with known amounts of target analytes which is processed through the same preparation as field samples. Evaluation of the spike recoveries, and the variability between the LCS and LCSD, gives an indication of analysis accuracy and precision in a clean matrix. Laboratory control spike precision and accuracy results for most analytes were acceptable for the target analytes associated with these samples. In one analytical batch, low recovery of dichlorobenzene was seen in the LCS and LCSD. Dichlorobenzene is also a target analyte in volatile analysis and the recovery of dichlorobenzene in the volatile fraction was acceptable.

The MS and MSD are field samples which have been spiked with a known amount of target analytes and processed through the preparation and analysis with the field samples. Evaluation of the spike recoveries, and the variability between the MS and MSD, gives an indication of analysis accuracy and precision in the sample matrix. MS/MSD accuracy and precision can be affected by concentrations of both target and non-target compounds present in the original field sample, as well as the matrix of the sample itself. Recoveries for most sets of MS/MSD analyses were acceptable for the target analytes. Three semi-volatile compounds, two metals, and one pesticide compound were not within acceptable limits for the MS/MSDs. Because the corresponding LCS/LCSD accuracy and precision were acceptable in these instances, it is likely that the MS/MSD results were affected by the sample matrix.

Surrogate spikes are known amounts of non-target compounds which are spiked into all samples prior to sample preparation, in order to evaluate the efficiency of the sample preparation and analysis. Surrogate recoveries were acceptable in all samples. Surrogates used in the dioxin/furan analysis were slightly low; however, based on the spiking procedure utilized in the analytical method, the data were considered acceptable.

The QC data were within acceptable accuracy and precision when compared to the project's data quality objectives. The data meets the quality objectives and are therefore considered usable to support project completion decisions.

Table 4-1
SUMMARY OF ANALYTICAL RESULTS

Sample	Date	Method	Compound	Result		Qualifier	Rep. Limit	Units
009-DC	3/13/98	E150.1	PH		7.300		0.1	SU
		SW1010	IGNITABILITY	GT	200.000			DEGF
		SW6010	ARSENIC		25.900		2.1	UGL
			BARIUM		261.000		0.3	UGL
			CADMIUM		2.200	B	0.3	UGL
			CHROMIUM		49.700		1.0	UGL
			LEAD		182.000	N	0.9	UGL
			SELENIUM		8.400		3.4	UGL
			SILVER	LT	1.000	U	1.0	UGL
		SW7.33	REACTIVE CYANIDE	LT	5.000	U	5.0	MGL
		SW7.34	REACTIVE SULFIDE	LT	4.000	U	4.0	MGL
		SW7470	MERCURY		0.450	N	0.1	UGL
		SW8080	2,2-BIS (PARA-CHLOROPHENYL)-1,1,1-TRICHLOROETHANE	LT	0.890	U	0.89	UGL
			2,2-BIS(P-CHLOROPHENYL)-1,1-DICHLOROETHANE	LT	0.890	U	0.89	UGL
			2,2-BIS(P-CHLOROPHENYL)-1,1-DICHLOROETHENE		0.018	DPJ	0.89	UGL
			ALDRIN		0.004	DPJ	0.44	UGL
			ALPHA-BENZENEHEXACHLORIDE	LT	0.440	U	0.44	UGL
			ALPHA-CHLORDANE		0.016	DPJ	0.44	UGL
			ALPHA-ENDOSULFAN	LT	0.440	U	0.44	UGL
			BETA-BENZENEHEXACHLORIDE	LT	0.440	U	0.44	UGL
			BETA-ENDOSULFAN	LT	0.890	U	0.89	UGL
			DELTA-BENZENEHEXACHLORIDE	LT	0.440	U	0.44	UGL
			DIELDRIN		0.028	DPJ	0.89	UGL
			ENDOSULFAN SULFATE	LT	0.890	U	0.89	UGL
			ENDRIN	LT	0.890	U	0.89	UGL
			ENDRIN ALDEHYDE	LT	0.890	U	0.89	UGL
			ENDRIN KETONE	LT	0.890	U	0.89	UGL
			GAMMA-BENZENEHEXACHLORIDE	LT	0.440	U	0.44	UGL
			GAMMA-CHLORDANE		0.024	DJ	0.44	UGL
			HEPTACHLOR		0.015	DPJ	0.44	UGL
			HEPTACHLOR EPOXIDE	LT	0.440	U	0.44	UGL
			METHOXYCHLOR		0.800	DJ	4.2	UGL
			PCB 1016	LT	11.000	U	11	UGL
			PCB 1221	LT	11.000	U	11	UGL
			PCB 1232	LT	11.000	U	11	UGL
			PCB 1242	LT	11.000	U	11	UGL
			PCB 1248	LT	11.000	U	11	UGL
			PCB 1254	LT	22.000	U	22	UGL
			PCB 1260	LT	22.000	U	22	UGL
			TOXAPHENE	LT	28.000	U	28	UGL

Sample	Date	Method	Compound	Result		Qualifier	Rep. Limit	Units
009-DC	3/13/98	SW8150	(2,4,5-TRICHLOROPHENOXY)ACETIC ACID	LT	0.800	U	0.8	UGL
			(4-CHLORO-2-METHYLPHENOXY)ACETIC ACID	LT	100.000	U	100	UGL
			2,4-DICHLOROPHENOXYACETIC ACID	LT	2.500	U	2.5	UGL
			2-(2,4,5-TRICHLOROPHENOXY)PROPIONIC ACID	LT	0.500	U	0.5	UGL
			2-(4-CHLORO-2-METHYLPHENOXY)PROPANOIC ACID	LT	70.000	U	70	UGL
			4-(2,4-DICHLOROPHENOXY)BUTYRIC ACID	LT	4.500	U	4.5	UGL
			DALAPON	LT	8.000	U	8	UGL
			DICAMBA	LT	1.000	U	1	UGL
			DICHLOROPROP	LT	1.500	U	1.5	UGL
			DINOSEB	LT	1.000	U	1	UGL
		SW8240	*XYLENES	LT	5.000	U	5	UGL
			1,1,1-TRICHLOROETHANE	LT	5.000	U	5	UGL
			1,1,2,2-TETRACHLOROETHANE	LT	5.000	U	5	UGL
			1,1,2-TRICHLOROETHANE	LT	5.000	U	5	UGL
			1,1-DICHLOROETHANE	LT	5.000	U	5	UGL
			1,1-DICHLOROETHENE	LT	5.000	U	5	UGL
			1,2-DICHLOROETHANE	LT	5.000	U	5	UGL
			1,2-DICHLOROETHYLENES (CIS AND TRANS ISOMERS)	LT	5.000	U	5	UGL
			1,2-DICHLOROPROPANE	LT	5.000	U	5	UGL
			ACETONE		12.000		10	UGL
			BENZENE	LT	5.000	U	5	UGL
			BROMODICHLOROMETHANE	LT	5.000	U	5	UGL
			BROMOFORM	LT	5.000	U	5	UGL
			BROMOMETHANE	LT	10.000	U	10	UGL
			CARBON DISULFIDE	LT	5.000	U	5	UGL
			CARBON TETRACHLORIDE	LT	5.000	U	5	UGL
			CHLOROBENZENE	LT	5.000	U	5	UGL
			CHLOROFORM	LT	5.000	U	5	UGL
			CIS-1,3-DICHLOROPROPENE	LT	5.000	U	5	UGL
			DIBROMOCHLOROMETHANE	LT	5.000	U	5	UGL
			ETHYLBENZENE	LT	5.000	U	5	UGL
			METHYL ETHYL KETONE		7.000	J	10	UGL
			METHYL ISOBUTYL KETONE	LT	10.000	U	10	UGL
			METHYLENE CHLORIDE	LT	5.000	U	5	UGL
			STYRENE	LT	5.000	U	5	UGL
			TETRACHLOROETHYLENE	LT	5.000	U	5	UGL
			TOLUENE	LT	5.000	U	5	UGL
			TRANS-1,3-DICHLOROPROPENE	LT	5.000	U	5	UGL
			TRICHLOROETHYLENE	LT	5.000	U	5	UGL
			VINYL CHLORIDE	LT	10.000	U	10	UGL
		SW8270	1,2,4-TRICHLOROBENZENE	LT	10.000	U	10	UGL
			1,2-DICHLOROBENZENE	LT	10.000	U	10	UGL

Sample	Date	Method	Compound	Result		Qualifier	Rep. Limit	Units
009-DC	3/13/98	SW8270	1,3-DICHLOROBENZENE	LT	10.000	U	10	UGL
			1,4-DICHLOROBENZENE	LT	10.000	U	10	UGL
			2,4,5-TRICHLOROPHENOL	LT	50.000	U	50	UGL
			2,4,6-TRICHLOROPHENOL	LT	10.000	U	10	UGL
			2,4-DICHLOROPHENOL	LT	10.000	U	10	UGL
			2,4-DIMETHYLPHENOL	LT	10.000	U	10	UGL
			2,4-DINITROPHENOL	LT	50.000	U	50	UGL
			2,4-DINITROTOLUENE	LT	10.000	U	10	UGL
			2,6-DINITROTOLUENE	LT	10.000	U	10	UGL
			2-CHLORONAPHTHALENE	LT	10.000	U	10	UGL
			2-CHLOROPHENOL	LT	10.000	U	10	UGL
			2-METHYL-4,6-DINITROPHENOL	LT	50.000	U	50	UGL
			2-METHYLNAPHTHALENE	LT	10.000	U	10	UGL
			2-METHYLPHENOL	LT	10.000	U	10	UGL
			2-NITROANILINE	LT	50.000	U	50	UGL
			2-NITROPHENOL	LT	10.000	U	10	UGL
			3,3'-DICHLOROBENZIDINE	LT	20.000	U	20	UGL
			3-METHYL-4-CHLOROPHENOL	LT	10.000	U	10	UGL
			3-NITROANILINE	LT	50.000	U	50	UGL
			4-BROMOPHENYLPHENYL ETHER	LT	10.000	U	10	UGL
			4-CHLOROANILINE	LT	10.000	U	10	UGL
			4-CHLOROPHENYLPHENYL ETHER	LT	10.000	U	10	UGL
			4-METHYLPHENOL	LT	10.000	U	10	UGL
			4-NITROANILINE	LT	50.000	U	50	UGL
			4-NITROPHENOL	LT	50.000	U	50	UGL
			ACENAPHTHENE	LT	10.000	U	10	UGL
			ACENAPHTHYLENE	LT	10.000	U	10	UGL
			ANTHRACENE	LT	10.000	U	10	UGL
			BENZO[A]ANTHRACENE	LT	10.000	U	10	UGL
			BENZO[A]PYRENE	LT	10.000	U	10	UGL
			BENZO[B]FLUORANTHENE	LT	10.000	U	10	UGL
			BENZO[K]FLUORANTHENE	LT	10.000	U	10	UGL
			BENZOIC ACID	LT	50.000	U	50	UGL
			BENZYL ALCOHOL	LT	10.000	U	10	UGL
			BIS(2-CHLOROETHOXY) METHANE	LT	10.000	U	10	UGL
			BIS(2-CHLOROETHYL) ETHER	LT	10.000	U	10	UGL
			BIS(2-CHLOROISOPROPYL) ETHER	LT	10.000	U	10	UGL
			BIS(2-ETHYLHEXYL) PHTHALATE		1.000	JB	10	UGL
			BUTYLBENZYL PHTHALATE	LT	10.000	U	10	UGL
			CARBAZOLE	LT	10.000	U	10	UGL
			CHRYSENE	LT	10.000	U	10	UGL
			DI-N-BUTYL PHTHALATE	LT	10.000	U	10	UGL

Sample	Date	Method	Compound	Result		Qualifier	Rep. Limit	Units
009-DC	3/13/98	SW8270	DI-N-OCTYL PHTHALATE	LT	10.000	U	10	U
			DIBENZ[AH]ANTHRACENE	LT	10.000	U	10	U
			DIBENZOFURAN	LT	10.000	U	10	UGL
			DIETHYL PHTHALATE	LT	10.000	U	10	UGL
			DIMETHYL PHTHALATE	LT	10.000	U	10	UGL
			FLUORANTHENE	LT	10.000	U	10	UGL
			FLUORENE	LT	10.000	U	10	UGL
			HEXACHLOROBENZENE	LT	10.000	U	10	UGL
			HEXACHLOROBUTADIENE	LT	10.000	U	10	UGL
			HEXACHLOROCYCLOPENTADIENE	LT	10.000	U	10	UGL
			HEXACHLOROETHANE	LT	10.000	U	10	UGL
			INDENO[1,2,3-C,D]PYRENE	LT	10.000	U	10	UGL
			ISOPHORONE	LT	10.000	U	10	UGL
			N-NITROSODIPHENYLAMINE	LT	10.000	U	10	UGL
			NAPHTHALENE	LT	10.000	U	10	UGL
			NITROBENZENE	LT	10.000	U	10	UGL
			NITROSO DI-N-PROPYLAMINE	LT	10.000	U	10	UGL
			PENTACHLOROPHENOL	LT	50.000	U	50	UGL
			PHENANTHRENE	LT	10.000	U	10	UGL
			PHENOL		6.000	J	10	UGL
			PYRENE	LT	10.000	U	10	UGL
		SW8290	*TOTAL HEPTACHLORODIBENZO-P-DIOXINS		37.400		4.06	PGL
			*TOTAL HEPTACHLORODIBENZOFURANS		13.700		2.76	PGL
			*TOTAL HEXACHLORODIBENZO-P-DIOXINS	LT	4.730	U	4.73	PGL
			*TOTAL HEXACHLORODIBENZOFURANS	LT	4.140	U	4.14	PGL
			*TOTAL OCTOCHLORODIBENZO-P-DIOXINS		321.000		4.17	PGL
			*TOTAL PENTACHLORODIBENZO-P-DIOXINS	LT	10.100	U	10.1	PGL
			*TOTAL PENTACHLORODIBENZOFURANS	LT	7.960	U	7.96	PGL
			*TOTAL TETRACHLORODIBENZO-P-DIOXINS	LT	6.000	U	6.0	PGL
			*TOTAL TETRACHLORODIBENZOFURANS		16.200		5.22	PGL
			1,2,3,4,6,7,8-HEPTACHLORODIBENZO-P-DIOXIN		37.400		4.06	PGL
			1,2,3,4,6,7,8-HEPTACHLORODIBENZOFURAN		9.560	X	2.76	PGL
			1,2,3,4,7,8,9-HEPTACHLORODIBENZOFURAN	LT	3.250	U	3.25	PGL
			1,2,3,4,7,8-HEXACHLORODIBENZO-P-DIOXIN	LT	6.310	U	6.31	PGL
			1,2,3,4,7,8-HEXACHLORODIBENZOFURAN	LT	4.790	U	4.79	PGL
			1,2,3,6,7,8-HEXACHLORODIBENZO-P-DIOXIN	LT	4.730	U	4.73	PGL
			1,2,3,6,7,8-HEXACHLORODIBENZOFURAN	LT	4.140	U	4.14	PGL
			1,2,3,7,8,9-HEXACHLORODIBENZO-P-DIOXIN	LT	4.960	U	4.96	PGL
			1,2,3,7,8,9-HEXACHLORODIBENZOFURAN	LT	5.450	U	5.45	PGL
			1,2,3,7,8-PENTACHLORODIBENZO-P-DIOXIN	LT	10.200	U	10.2	PGL
			1,2,3,7,8-PENTACHLORODIBENZOFURAN	LT	8.240	U	8.24	PGL
			2,3,4,6,7,8-HEXACHLORODIBENZOFURAN	LT	5.250	U	5.25	PGL

Sample	Date	Method	Compound	Result		Qualifier	Rep. Limit	Units
009-DC	3/13/98	SW8290	2,3,4,7,8-PENTACHLORODIBENZOFURAN	LT	7.960	U	7.96	PGL
			2,3,7,8-TETRACHLORODIBENZO[B,E][1,4]DIOXIN	LT	6.000	U	6.0	PGL
			2,3,7,8-TETRACHLORODIBENZOFURAN	LT	5.220	U	5.22	PGL
			OCTACHLORODIBENZOFURAN, NON-SPECIFIC		18.200		5.11	PGL
A01	4/2/98		*TOTAL HEPTACHLORODIBENZO-P-DIOXINS	LT	7.500	U	7.5	PGL
			*TOTAL HEPTACHLORODIBENZOFURANS	LT	2.840	U	2.84	PGL
			*TOTAL HEXACHLORODIBENZO-P-DIOXINS	LT	5.320	U	5.32	PGL
			*TOTAL HEXACHLORODIBENZOFURANS	LT	3.930	U	3.93	PGL
			*TOTAL OCTOCHLORODIBENZO-P-DIOXINS	LT	3.420	U	3.42	PGL
			*TOTAL PENTACHLORODIBENZO-P-DIOXINS	LT	10.200	U	10.2	PGL
			*TOTAL PENTACHLORODIBENZOFURANS	LT	7.000	U	7	PGL
			*TOTAL TETRACHLORODIBENZO-P-DIOXINS	LT	7.170	U	7.17	PGL
			*TOTAL TETRACHLORODIBENZOFURANS	LT	5.430	U	5.43	PGL
			1,2,3,4,6,7,8-HEPTACHLORODIBENZO-P-DIOXIN	LT	7.500	U	7.5	PGL
			1,2,3,4,6,7,8-HEPTACHLORODIBENZOFURAN	LT	2.840	U	2.84	PGL
			1,2,3,4,7,8,9-HEPTACHLORODIBENZOFURAN	LT	3.340	U	3.34	PGL
			1,2,3,4,7,8-HEXACHLORODIBENZO-P-DIOXIN	LT	7.100	U	7.1	PGL
			1,2,3,4,7,8-HEXACHLORODIBENZOFURAN	LT	4.550	U	4.55	PGL
			1,2,3,6,7,8-HEXACHLORODIBENZO-P-DIOXIN	LT	5.320	U	5.32	PGL
			1,2,3,6,7,8-HEXACHLORODIBENZOFURAN	LT	3.930	U	3.93	PGL
			1,2,3,7,8,9-HEXACHLORODIBENZO-P-DIOXIN	LT	5.590	U	5.59	PGL
			1,2,3,7,8,9-HEXACHLORODIBENZOFURAN	LT	5.180	U	5.18	PGL
			1,2,3,7,8-PENTACHLORODIBENZO-P-DIOXIN	LT	10.200	U	10.2	PGL
			1,2,3,7,8-PENTACHLORODIBENZOFURAN	LT	7.240	U	7.24	PGL
			2,3,4,6,7,8-HEXACHLORODIBENZOFURAN	LT	4.990	U	4.99	PGL
			2,3,4,7,8-PENTACHLORODIBENZOFURAN	LT	7.000	U	7	PGL
			2,3,7,8-TETRACHLORODIBENZO[B,E][1,4]DIOXIN	LT	7.170	U	7.17	PGL
			2,3,7,8-TETRACHLORODIBENZOFURAN	LT	5.430	U	5.43	PGL
			OCTACHLORODIBENZOFURAN, NON-SPECIFIC	LT	5.160	U	5.16	PGL
B01			*TOTAL HEPTACHLORODIBENZO-P-DIOXINS	LT	7.280	U	7.28	PGL
			*TOTAL HEPTACHLORODIBENZOFURANS	LT	3.100	U	3.1	PGL
			*TOTAL HEXACHLORODIBENZO-P-DIOXINS	LT	5.120	U	5.12	PGL
			*TOTAL HEXACHLORODIBENZOFURANS	LT	3.270	U	3.27	PGL
			*TOTAL OCTOCHLORODIBENZO-P-DIOXINS		12.700		2.93	PGL
			*TOTAL PENTACHLORODIBENZO-P-DIOXINS	LT	8.020	U	8.02	PGL
			*TOTAL PENTACHLORODIBENZOFURANS	LT	4.580	U	4.58	PGL
			*TOTAL TETRACHLORODIBENZO-P-DIOXINS	LT	3.360	U	3.36	PGL
			*TOTAL TETRACHLORODIBENZOFURANS	LT	4.450	U	4.45	PGL
			1,2,3,4,6,7,8-HEPTACHLORODIBENZO-P-DIOXIN	LT	7.280	U	7.28	PGL
			1,2,3,4,6,7,8-HEPTACHLORODIBENZOFURAN	LT	3.100	U	3.1	PGL
			1,2,3,4,7,8,9-HEPTACHLORODIBENZOFURAN	LT	3.640	U	3.64	PGL
			1,2,3,4,7,8-HEXACHLORODIBENZO-P-DIOXIN	LT	6.800	U	6.8	PGL

Sample	Date	Method	Compound	Result		Qualifier	Rep. Limit	Units
B01	4/2/98	SW8290	1,2,3,4,7,8-HEXACHLORODIBENZOFURAN	LT	3.790	U	3.79	PGL
			1,2,3,6,7,8-HEXACHLORODIBENZO-P-DIOXIN	LT	5.120	U	5.12	PGL
			1,2,3,6,7,8-HEXACHLORODIBENZOFURAN	LT	3.270	U	3.27	PGL
			1,2,3,7,8,9-HEXACHLORODIBENZO-P-DIOXIN	LT	5.360	U	5.36	PGL
			1,2,3,7,8,9-HEXACHLORODIBENZOFURAN	LT	4.310	U	4.31	PGL
			1,2,3,7,8-PENTACHLORODIBENZO-P-DIOXIN	LT	8.020	U	8.02	PGL
			1,2,3,7,8-PENTACHLORODIBENZOFURAN	LT	4.740	U	4.74	PGL
			2,3,4,6,7,8-HEXACHLORODIBENZOFURAN	LT	4.150	U	4.15	PGL
			2,3,4,7,8-PENTACHLORODIBENZOFURAN	LT	4.580	U	4.58	PGL
			2,3,7,8-TETRACHLORODIBENZO[B,E][1,4]DIOXIN	LT	3.360	U	3.36	PGL
			2,3,7,8-TETRACHLORODIBENZOFURAN	LT	4.450	U	4.45	PGL
			OCTACHLORODIBENZOFURAN, NON-SPECIFIC	LT	4.460	U	4.46	PGL

GT = Greater Than

LT = Less Than

Data Qualifiers:

B = Analyte detected in blank

D = Value reported from diluted analysis

J = Estimated value below quatitation limit

P = Greater then 25% difference on secondary confirmation column

N = Matrix spike recovery not within control limits

U = Not detected

X = Estimated maximum potential concentration

Units of Measure:

DEGF = Degrees Fahrenheit

MGL = Milligrams per Liter

PGL = Picograms per Liter

SU = Standard Units

UGL = Micrograms per Liter

5.0
CONCLUSIONS

5.1 CONCLUSIONS

MK completed construction of seep filtration systems for Seep A and Seep B at Site 4 of CBC Gulfport, Mississippi. Construction was completed on schedule despite heavy rain resulting in flooding of the site. Construction was also performed in a manner that did not interrupt the normal use of the golf facility.

Seep water samples were collected after two weeks of construction completion. Laboratory analyses indicated that TCDD and PeCDD, the main components of concern at the sites, were below detection limits. Therefore, the filtration systems are effective in controlling migration of dioxin and furans.

As part of continued monitoring effort of the filtration system, seep sampling will be performed on a quarterly basis. Quarterly sampling will depend on seepage, which may not occur in dry seasons.

6.0
REFERENCES

MK, January 1998. *Work Plan for Seep Filtration at Site 4, Naval Construction Battalion Center, Gulfport, Mississippi.* Prepared for the Navy, Southern Division, Naval Facilities Engineering Command by Morrison Knudsen Corporation. [MK, 1998]

MK, August 1995. *Geophysical Investigation of Sites 1, 4 and 5 at the Naval Construction Battalion Center (NCBC) Gulfport, Mississippi.* [MK, 1995]

ABB-ES, October 1997. *Phase 1 Summary Report for Onsite and Offsite Delineation Activities. Naval Construction Battalion Center (NCBC) Gulfport, Mississippi.* [ABB-ES, 1997]

APPENDIX A

PERMITS, NOTIFICATIONS AND CERTIFICATIONS

APPENDIX A
PERMITS, NOTIFICATIONS AND CERTIFICATIONS

INDEX

DESCRIPTION	PAGES
Request for Permit Waiver	2 pages
Comment and Agreement Letter from MDEQ	1 page
Excavation Permit	2 pages
Certificate of Satisfactory Completion	1 page
Approval Letter from POTW	1 page

DEPARTMENT OF THE NAVY
SOUTHERN DIVISION
NAVAL FACILITIES ENGINEERING COMMAND
P.O. BOX 190010
2155 EAGLE DRIVE
NORTH CHARLESTON, S.C. 29419-9010

RECEIVED
JAN 21 1998
MORRISON KNUDSEN

98-0040
JAN 20 1998

Code 1865
January 12, 1998

Mr. Phillip Weathersby
Mississippi Department of Environmental Quality
Office of Pollution Control
Post Office Box 10385
Jackson, MS 39289-0385

Subj: CONSTRUCTION BATTALION CENTER GULFPORT ~ REQUEST FOR PERMIT WAIVER

Dear Mr. Weathersby:

As discussed with you on 18 November 1997, we intend to implement temporary measures to mitigate the potential migration of contaminants into the canal at Site 4, adjacent to the base golf course. In order for us to proceed, we are requesting a permit waiver from your office.

Two seep areas were identified during the Phase 1 sampling effort by ABB Environmental Services. Dioxin was detected in the samples (see attached data results in parts per quadrillion). Since the seep water is flowing into a canal, temporary measures are intended to control possible off-site migration of dioxin and furans until groundwater monitoring investigations at Site 4 are completed. The Groundwater Monitoring Plan is now approved and funded for FY98.

Our approach will be to filter the seeps using activated carbon beds and allow the filtered water to flow into the canal. Initially, a horseshoe shaped earthen embankment will be constructed down stream of the existing seeps to provide a settlement basin. The upstream side of the embankment will be filled with activated carbon to trap dioxin in the area. The filtered seep water will either overflow the earthen embankment or flow through pipes placed through the embankment. Details of the filtration system will be provided in a work plan, which will be provided to you upon completion.

We plan to start construction of the above filtration system by February 23, 1998. We understand that discharge permits are required in accordance with *Mississippi Administrative Code, Department of Environmental Quality Waste Water Regulations for National Pollution Discharge Elimination System (NPDES) Permits, Underground Injection Control (UIC) Permits, State Permits, Water Quality Board Effluent Limitations and Water Quality Certifications.* However, we want to be proactive with the data we currently have and not delay action while awaiting further study.

Subj: CONSTRUCTION BATTALION CENTER GULFPORT ~ REQUEST FOR PERMIT WAIVER

Your approval of this request will allow construction of the filtration system to proceed and discharge of filtered waters derived from the seeps to the canal. We view this waiver similar to the waiver provided last year for the construction of silt traps along various ditches at CBC Gulfport. Please contact me should you need additional information regarding this request at (803) 820-5520.

Sincerely,

ART CONRAD
Remedial Project Manager
Installation Restoration II Branch

Encl:
(1) Site 4 Dioxin Results

Copy to: (w/o encl)
Environmental Programs Manager, CBC Gulfport (Gordon Crane)
→Morrison Knudsen Corporation (Robert Hlavacek)

C-4324			
DIST	I	A	R
PM	✓		
PjM			
FCM			
CAM	✓		
BM			
PURCH			
OCM			
SAFETY			
Maving	✓		
M. Wilson	✓		

11-2.2

MDEQ Comments on the Draft
Workplan for Seep Filtration at Site 4

---

1. Page 2-1, section 2.1, second bullet. The MCL for TCDD is 30 ppq instead of 10 ppq.

2. Page 4-1, fourth paragraph, second sentence, how will the contaminated activated carbon be recovered and managed in the event of breakthrough and/or the end of the temporary measure.

   The State is willing to waive the requirement for NPDES permit as long as the measure is temporary and progress toward final remediation continues. The State reserves the right to require that the NPDES permit application be submitted if final remediation plans are not submitted in a timely manner. Also, the workplan should be revised to include a quarterly sampling plan in addition to the post construction sampling event.

3. Page 4-2, Section 4.2.3.1, the MDEQ recommends that the PVC sampling port be screened, capped and filled with activated carbon as described for the filtration system for Seep B. Please explain why this was not include in the plan for filtration system A.

4. Page 4-3, Section 4.2.3.2, second sentence, text describes three two inch diameter PVC pipes to be installed, but the figure shows nine. Please clarify.

5. Figures 4-1 and 4-2, from the drawings it is hard to interpret whether 1) the seep water first encounters the activated carbon bed when discharging, or 2) the seep water discharges down the slope, filters through the filter fabric and into the activated carbon bed. Please describe in the text and show the position of the seep relative to the activated carbon bed.

6. Page 4-3, Section 4.2.6, please include in the waste management section or in Appendix D the management of the used activated carbon.

Post-it™ brand fax transmittal memo 7671	# of pages ▸ 1
To HAN MANG	From ART COMAR
Co. MK	Co.
Dept.	Phone 803 820 5520
Fax # 216 523 5201	Fax # 5563

EXCAVATION PERMIT

DATE: 2/24/98 PW NUMBER: DIG 98035

PROVAL IS GRANTED FOR 90 DAYS EXCEPT FOR TELEPHONES WHICH IS GOOD FOR 10 DAYS.

REQUESTING COMMAND: RoICC REQUESTING OFFICIAL: Billy Byrd

WORK REQUEST/SERVICE CALL #: _____ JOB ORDER # _____

LOCATION: SEE ATTACHED SHEET (MAP) EXC (-2') to be done at "SEEP"-A, AND "SEEP" B.

PLANNED START DATE: 2/27/98 PLANNED COMPLETION DATE: 3/10/98

DESCRIPTION OF WORK: MK PERFORMING REMEDIAL WORK ON HAZARDOUS WASTE SITE.

****

OK	ELECTRICAL:	(SIGNATURE)	(CODE)	22-95 (DATE)
	GAS:	(SIGNATURE)	(CODE)	(DATE)
	WATER:	(SIGNATURE)	(CODE)	(DATE)
	SEWER:	(SIGNATURE)	(CODE)	(DATE)
	MONACO FIRE ALARM:	(SIGNATURE)	(CODE)	(DATE)
	TELEPHONE:	(SIGNATURE)	(CODE)	(DATE)
	CABLE TV:	(SIGNATURE)	(CODE)	(DATE)
	FIBER OPTICS	(SIGNATURE)	(CODE)	(DATE)

RECEIVED FEB 27 1998 MK CORP

MISSISSIPPI ONE CONTROL NUMBER: _____

1-800-227-6477 *** PHONE PERMIT IS GOOD FOR 10 WORKING DAYS. OUR CODE *****NABA******

NOTES

1. MISSISSIPPI ONE CONTROL HAS BEEN NOTIFIED AND WILL MARK TELEPHONE LINES OR WILL MARK CLEAR AT THE SITE BY _____.
(DATE)

2. WHEN READY TO DIG, IF UTILITY LINES ARE IDENTIFIED ABOVE TO BE MARKED, CALL FMED CODE 20 EXT. 2170 OR 2171.

NOTE: We have no knowledge of water irrigation + controls are located.

27 FEB 98

Dig[illegible]g Permit -(FR1-)

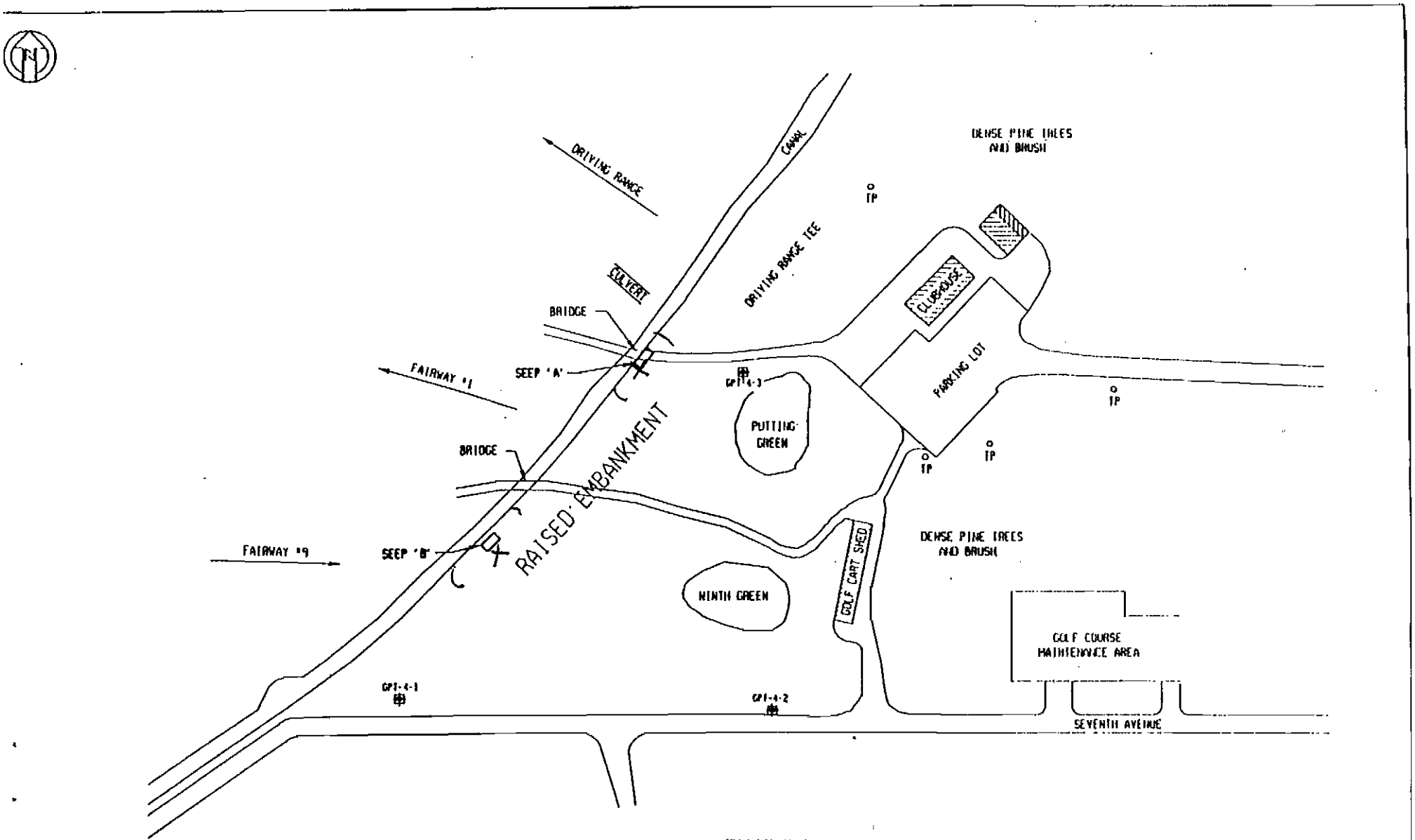

FIGURE 1-2
SEEP LOCATION MAP

LEGEND

- o TP TELEPHONE POLE
- CULVERT
- MONITOR WELL
- BUILDING

0 100 200 FT
SCALE

MORRISON KNUDSEN CORPORATION
1500 WEST 3RD STREET
CLEVELAND, OHIO 44113-1406
PHONE: (216) 523-5600 FAX: (216) 523-5200

Certificate of Satisfactory Completion

SEEP FILTRATION AT SITE 4

Naval Construction Battalion Center
Gulfport, Mississippi

Naval Facilities Engineering Command, Southern Division
ERAC Contract Number: N62467-93-D-1106
Delivery Order Number: 0002
Statement of Work: 009

The following personnel acknowledge the satisfactory completion of seep filtration construction in accordance with the Work Plan and approved changes at CBC Gulfport, Mississippi

Morrison Knudsen Corporation

Name: James E Winner Signature: James E Winner

Title: QC Supervisor Date: 3-14-98

CBC Gulfport

Name: Billy Byrd Signature: Billy Byrd

Title: ROICC CONREP Date: 3/14/98 (1200)

Harrison County Wastewater and Solid Waste Management District

A. J. Holloway, Mayor, City of Biloxi
Russell Quave, Mayor, City of D'Iberville
Bob Short, Mayor, City of Gulfport

Board of Directors

Robert Bass, Mayor, City of Long Beach
Billy McDonald, Mayor, City of Pass Christian
David LaRosa, Sr., Supervisor, Harrison County

Executive Director
Kamran Pahlavan, P.E.

April 27, 1998

FAX LETTER

RECEIVED
CORP.ORP

Mr. Martin Wilson
Morrison Knudsen Corporation
2420 Mall Drive
Corporate Square One, Suite 211
North Charleston, SC 29406

Dear Mr. Wilson:

The District has reviewed your request for one rime authority to discharge approximately 50 gallons of decontamination water from NCBC to the Gulfport Wastewater Treatment Plant Based on the test results, this request is approved.

This represents a one time authority for such a discharge. You are reminded that any future discharge would require separate and complete testing prior to consideration.

Sincerely,

Jerry L. Davis
O&M Contract Administrator

cc: Mr. Gordon Crane (NCBC)

Post-It® Fax Note 7671	Date 4/27	# of pages ▶ 1
To Martin Wilson	From Jerry Davis	
Co./Dept.	Co.	
Phone #	Phone #	
Fax # 803-740-0166	Fax # 228 868-8751	

P.O. Box 2409 • Gulfport, MS 39505-2409 • Telephone (228) 868-8752 • Facsimile (228) 868-8751

APPENDIX B

PROJECT PHOTOGRAPHS

APPENDIX B

INDEX

PHOTOGRAPH		PAGE
1	SEEP A - PRECONSTRUCTION CONDITION	B-3
2	SEEP A - PRECONSTRUCTION CONDITION	B-3
3	SEEP A - FLAGGING CONSTRUCTION BOUNDARIES	B-4
4	SEEP A - CONSTRUCTION OF FRENCH DRAIN	B-4
5	SEEP A - EMBANKMENT CONSTRUCTION	B-5
6	SEEP A - FLOODING DUE TO HEAVY RAIN	B-5
7	SEEP A - AFTERMATH OF FLOOD	B-6
8	SEEP A - PLACEMENT OF GRANULAR ACTIVATED CARBON	B-6
9	SEEP A - CONSTRUCTION OF GABION MATTRESS	B-7
10	SEEP A - COMPLETION OF CONSTRUCTION	B-7
11	SEEP A - AFTER COMPLETION OF CONSTRUCTION	B-8
12	SEEP A - AFTER COMPLETION OF CONSTRUCTION	B-8
13	SEEP B - PRECONSTRUCTION CONDITION	B-9
14	SEEP B - PRECONSTRUCTION CONDITION	B-9
15	SEEP B - FLAGGING CONSTRUCTION BOUNDARIES	B-10
16	SEEP B - FLOODING DUE TO HEAVY RAIN	B-10
17	SEEP B - AFTERMATH OF FLOOD	B-11
18	SEEP B - EXCAVATION AND PIPE PLACEMENT	B-11
19	SEEP B - UNLOADING OF GRANULAR ACTIVATED CARBON BAGS	B-12
20	SEEP B - PLACEMENT OF GRANULAR ACTIVATED CARBON	B-12
21	SEEP B - AFTER PLACEMENT OF FILTER FABRIC AND TOP SOIL	B-13
22	SEEP B - PLACEMENT OF SOD	B-13
23	SEEP B - AFTER COMPLETION OF CONSTRUCTION	B-14
24	SEEP B - AFTER COMPLETION OF CONSTRUCTION	B-14

PHOTO 1
SEEP A - PRECONSTRUCTION CONDITION

PHOTO 2
SEEP A - PRECONSTRUCTION CONDITION

PHOTO 3
SEEP A - FLAGGING CONSTRUCTION BOUNDARIES

PHOTO 4
SEEP A - CONSTRUCTION OF FRENCH DRAIN

PHOTO 5
SEEP A - EMBANKMENT CONSTRUCTION

PHOTO 6
SEEP A - FLOODING DUE TO HEAVY RAIN

PHOTO 7
SEEP A - AFTERMATH OF FLOOD

PHOTO 5
SEEP A - PLACEMENT OF GRANULAR ACTIVATED CARBON

PHOTO 9
SEEP A - CONSTRUCTION OF GABION MATTRESS

PHOTO 10
SEEP A - COMPLETION OF CONSTRUCTION

PHOTO 11
SEEP A - AFTER COMPLETION OF CONSTRUCTION

PHOTO 12
SEEP A - AFTER COMPLETION OF CONSTRUCTION

PHOTO 13
SEEP B - PRECONSTRUCTION CONDITION

PHOTO 14
SEEP B - PRECONSTRUCTION CONDITION

PHOTO 15
SEEP B - FLAGGING CONSTRUCTION BOUNDARIES

PHOTO 16
SEEP B - FLOODING DUE TO HEAVY RAIN

PHOTO 17
SEEP B - AFTERMATH OF FLOOD

PHOTO 18
SEEP B - EXCAVATION AND PIPE PLACEMENT

PHOTO 19
SEEP B - UNLOADING OF GRANULAR ACTIVATED CARBON BAGS

PHOTO 20
SEEP B - PLACEMENT OF GRANULAR ACTIVATED CARBON

PHOTO 21
SEEP B - AFTER PLACEMENT OF FILTER FABRIC AND TOP SOIL

PHOTO 22
SEEP B - PLACEMENT OF SOD

PHOTO 23
SEEP 6 - AFTER COMPLETION OF CONSTRUCTION

PHOTO 24
SEEP 8 - AFTER COMPLETION OF CONSTRUCTION

APPENDIX C

FIELD CLARIFICATION REQUESTS

APPENDIX C
FIELD CLARIFICATION REQUESTS

INDEX

FCR NO.	PAGES
02-001	2 pages
02-002	4 pages
02-003	3 pages
02-004	1 page
02-005	2 pages
02-006	3 pages

NAVFAC Southern Division/
Morrison Knudsen Corporation

District II RAC

FIELD CLARIFICATION REQUEST (FCR)

Delivery Order No.: 02	Subcontract No: 4324-118	FCR No.: 02-~~009~~ 001
SOW # 009		Page 1 of 2

Reference Documents (Affected Document No., Revision No., Title):
WORK PLAN SECTION 4.2.3.2, FILTRATION SYSTEM FOR SEEP B
FIGURE 4-2, FILTRATION SYSTEM - SEEP B

Problem / Change Description:
THE CURRENT GROUND COVER AT SEEP B IS NOT A DESIRABLE MATERIAL AND WILL NOT BE SODDED INTO ROLLS EASILY AS DISCUSSED IN SECTION 4.2.3.2 OF THE WORK PLAN. REMOVAL OF THE MATERIAL COULD POSE WASTE MGT COSTS

INITIATED BY	Signature: MARTIN WILSON	Organization: MORRISON KNUDSEN	Date: 2-24-98

Resolution:
PUSH THE CURRENT GROUND COVER TO THE LOWER PART OF THE NEW BUILT UP BERM AS SHOWN ON THE ATTACHED REVISED FIGURE 4-2. THIS WILL ALLOW THE MATERIAL TO REMAIN IN PLACE AS GROUND COVER AND WILL ELIMINATE THE NEED FOR WASTE DISPOSAL. NEW TOPSOIL WILL BE PLACED AND NEW SOD WILL BE USED.

RECEIVED
FEB 27 1997
MK CUMP

If this FCR affects a subcontract, indicate ~~CIO~~ number: N/A

APPROVAL BY MK PE	Signature:	Date: 2-24-98	Additional Reviews: By/Date
APPROVAL BY MK PjM	Signature:	Date: 2-24-98	
APPROVAL BY MK QC	Signature:	Date: 2-24-98	
APPROVAL BY ROICC/NTR or RPM	Signature: X	Date: 2/27/98	→ in conjunction w/ FCR #3

Regulator Approval/Notification Recommended:
Yes ☐ No ☒

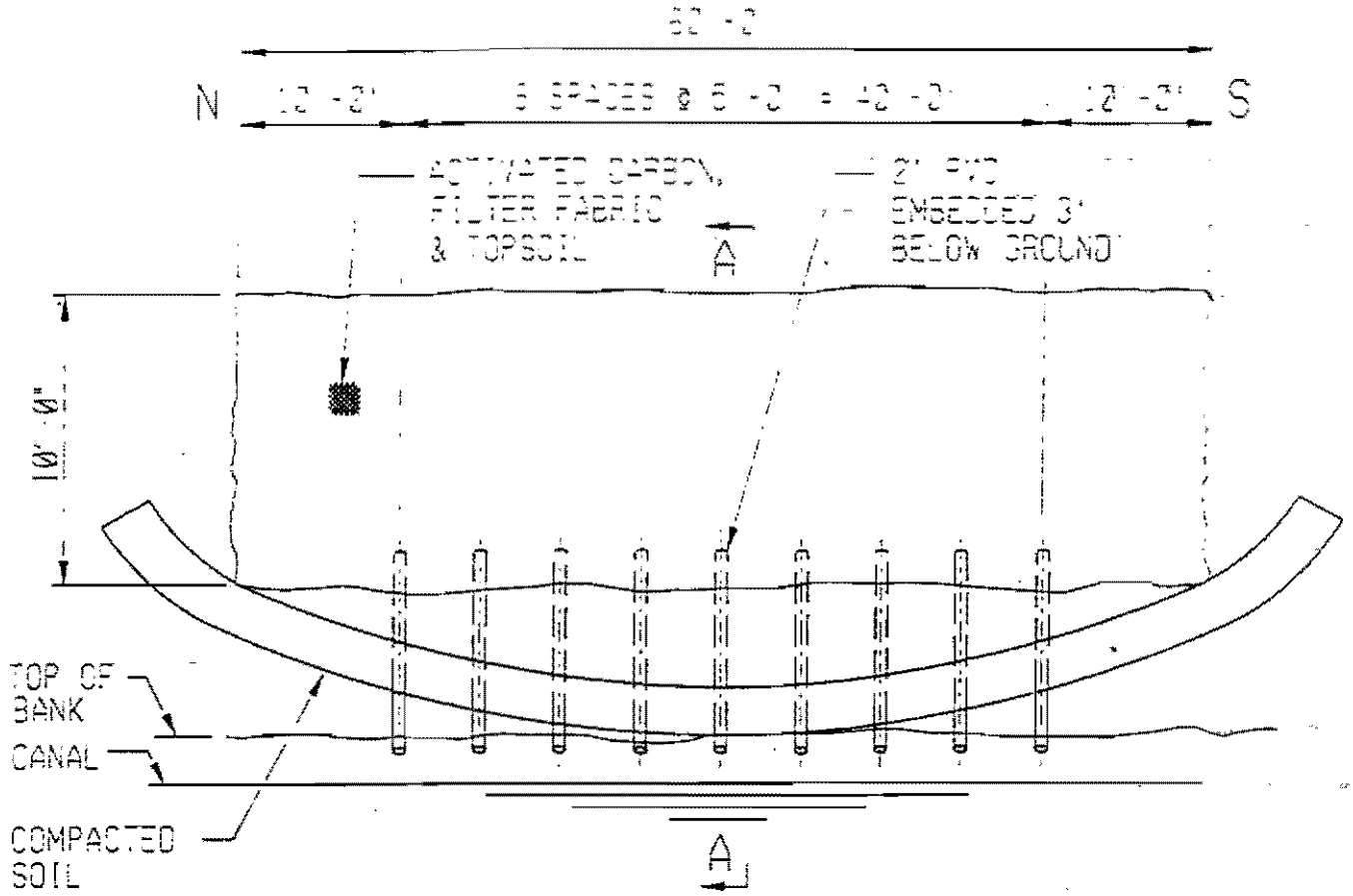

ELEVATION LOOKING EAST N.T.S.

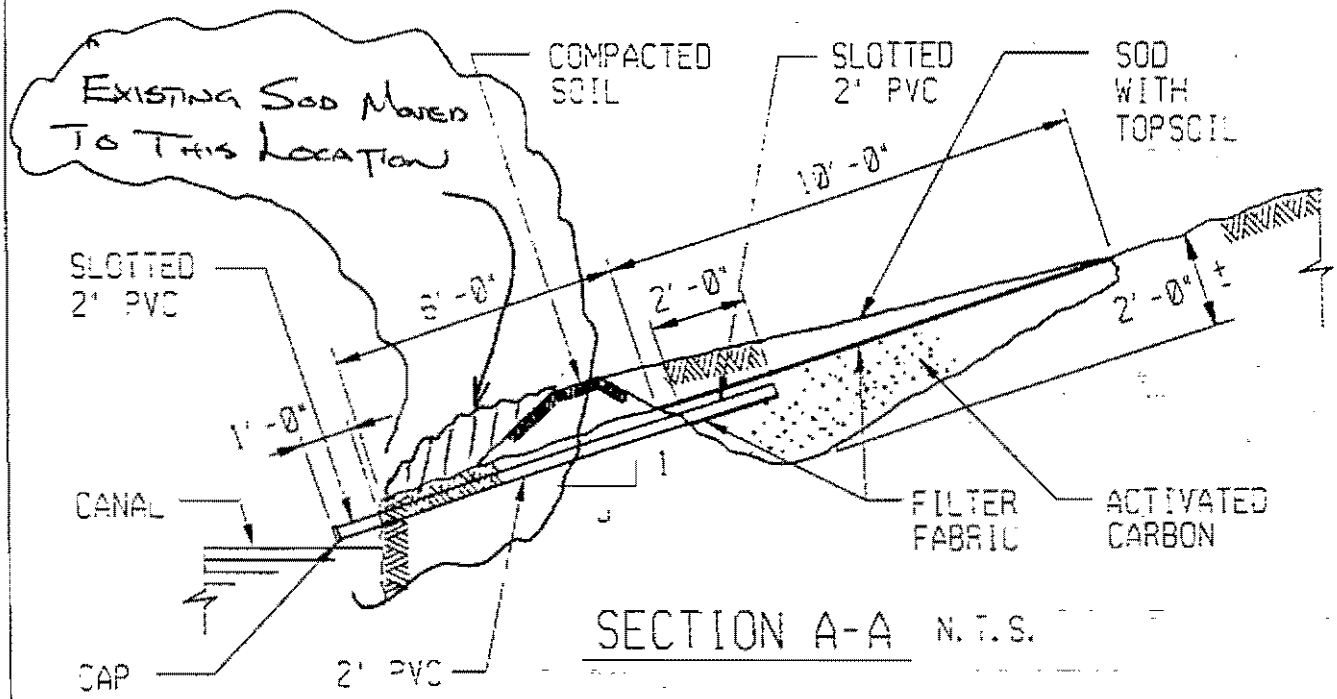

SECTION A-A N.T.S.

FIGURE 4-2
FILTRATION SYSTEM - SEEP B

MORRISON KNUDSEN CORPORATION

NAVFAC Southern Division/ Morrison Knudsen Corporation	District II RAC

FIELD CLARIFICATION REQUEST (FCR)

Delivery Order No.: 02	Subcontract No: 4324-118	FCR No.: 02-002
SOW #009		Page 1 of 4

Reference Documents (Affected Document No., Revision No., Title):
WORK PLAN FIGURE 1-2 SEEP LOCATION MAP

Problem / Change Description:
ACTUAL LOCATION OF SEEP 'B' IS NOT DEFINED IN THE WORK PLAN

INITIATED BY	Signature: MARTIN WILSON	Organization: MORRISON KNUDSEN	Date: 2-25-98

Resolution: THROUGH COMMUNICATIONS FROM ABB AND WALKING THE SITE, WE HAVE DETERMINED THE LOCATION OF SEEP 'B' AS SHOWN ON THE REVISED FIGURE 1-2

RECEIVED
FEB 26 1997
MK CUMP

If this FCR affects a subcontract, indicate ~~CID~~ number: N/A

APPROVAL BY MK PE	Signature:	Date: 2-25-98	Additional Reviews: By/Date
APPROVAL BY MK PjM	Signature:	Date: 2-25-98	
APPROVAL BY MK QC	Signature:	Date: 2-25-98	
APPROVAL BY ROICC/NTR or RPM	X Signature:	Date: 2-26-98	

Regulator Approval/Notification Recommended:
Yes ☐ No ☑

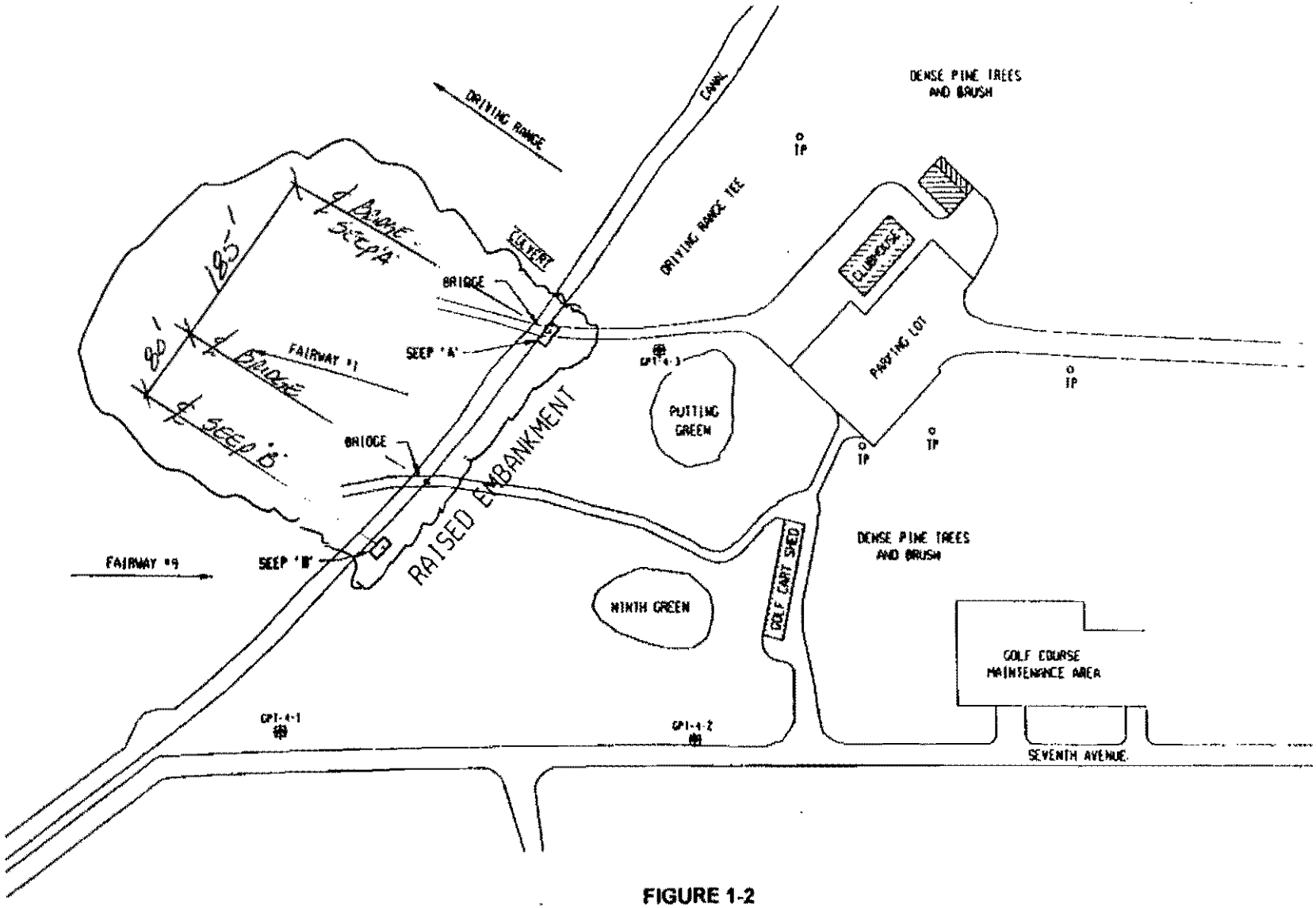

FIGURE 1-2
SEEP LOCATION MAP

MORRISON KNUDSEN CORPORATION
1500 WEST 3RD STREET

ABB

Environmental Services, Inc.

Date: 2/25/98

Time:

Number of Pages:

To: ART CONRAD / HAL MANNG

Company:

Phone Number:

Fax Number:

From:

Company: ABB Environmental Services, Inc.

Phone Number: (423) 531-1922

Fax Number: (423) 531-8226

RE: THIS IS FROM MY ORIGINAL NOTES 4/28/97
I HOPE THIS CLEARS UP ANY CONFUSION I MAY HAVE
CAUSED YESTERDAY

1400 Centerpoint Boulevard • Suite 158 • Knoxville, TN 37932-1968
(423) 531-1922 • Fax: (423) 531-8226

PROJECT	COMP. BY	JOB NO.
NCBC PHASE 1	CHK. BY	DATE 4-28-97

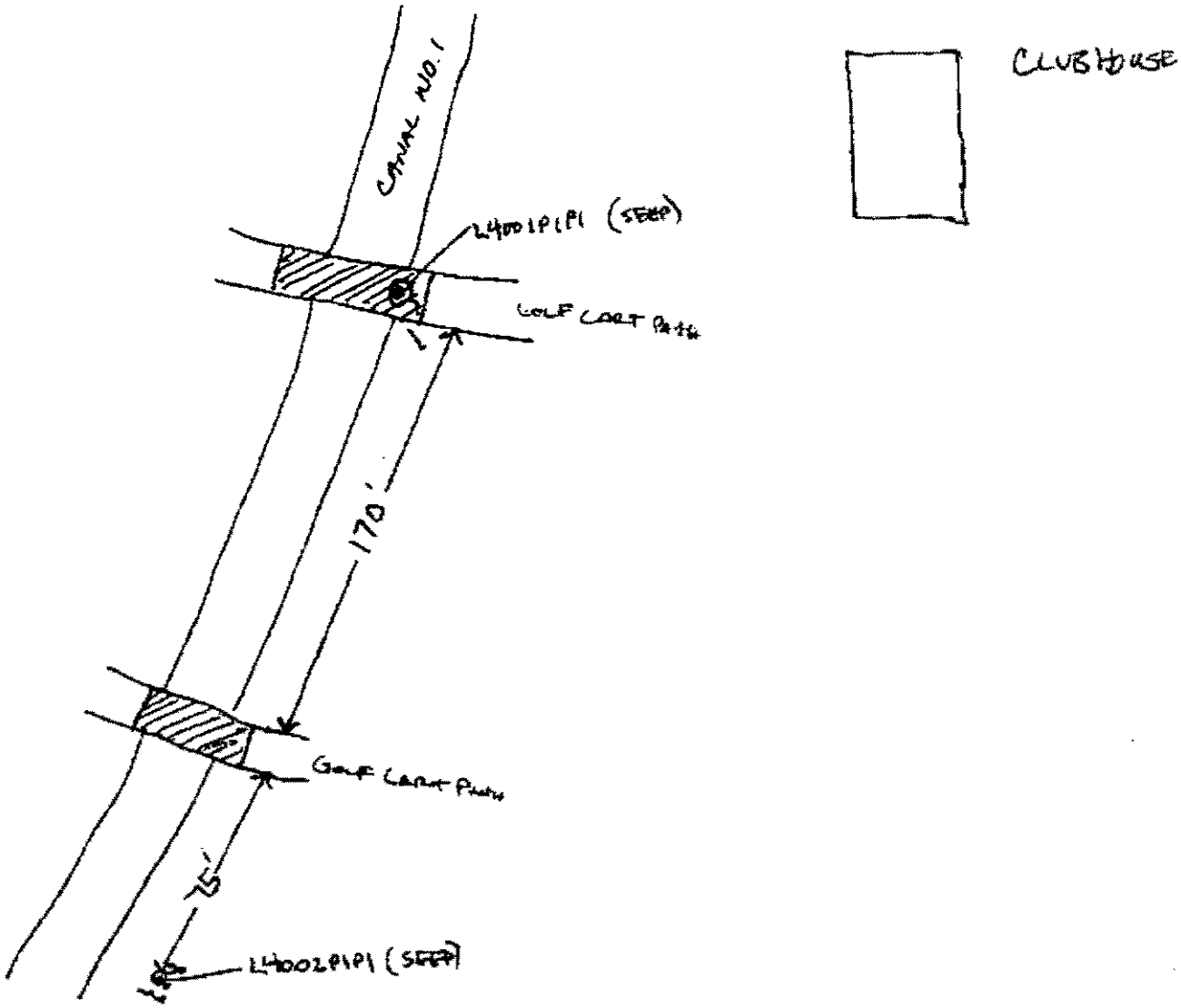

ABB Environmental Services, Inc.

NAVFAC Southern Division/ Morrison Knudsen Corporation	District II RAC

FIELD CLARIFICATION REQUEST (FCR)

Delivery Order No.: 02	Subcontract No: 4324-118	FCR No.: 02-003
SOW #009		Page 1 of 2

Reference Documents (Affected Document No., Revision No., Title):
WORK PLAN FIGURE 4-2 FILTRATION SYSTEM SEEP B
SECTION 4.2.3.2 FILTRATION SYSTEM FOR SEEP B

Problem / Change Description:
THE BERM IS TO BE CONSTRUCTED FROM THE SATURATED SOILS IN SEEP B. THE 6'-0" EDGE DISTANCE TO THE WATER (ON THE SLOPE) DOES NOT PROVIDE ENOUGH ROOM TO CONSTRUCT THE EARTHEN BERM TO PROVIDE STABILITY.

INITIATED BY	Signature: MARTIN WILSON	Organization: MORRISON KNUDSEN	Date: 2-26-98

Resolution:
PLACE A BACKER OF ROCK IN WIRE MESH AT THE TOE OF THE BERM. THIS BACKER WILL PROVIDE STABILITY FOR THE SOIL DURING CONSTRUCTION AND SHOULD MINIMIZE THE POSSIBILITY OF WASHOUTS. SOIL & SOD CAN BE PLACED OVER MOST OF THE BACKER MINIMIZING THE HAZARD TO GOLF PLAY. SEE ATTACHED REVISED FIGURE 4-2.

RECEIVED
FEB 27 1997
MK CHKP

If this FCR affects a subcontract, indicate CID number: N/A

	Signature:	Date:	Additional Reviews: By/Date
APPROVAL BY MK PE	for Hari Pandey (CN Pete)	2-26-98	
APPROVAL BY MK PjM		2-26-98	
APPROVAL BY MK QC	James E. Winn	2-26-98	
APPROVAL BY ROICC/NTR or RPM	Shirley Tryon	2/27/98	

Regulator Approval/Notification Recommended:
Yes ☐ No ☑

16-1-02

NAVFAC Southern Division/ Morrison Knudsen Corporation	District II RAC

FIELD CLARIFICATION REQUEST (FCR)

Delivery Order No.: 02	Subcontract No: 4324-118	FCR No.: 02-003 A
SOW #009		Page 1 of

Reference Documents (Affected Document No., Revision No., Title):
WORK PLAN FIGURE 4-2 FILTRATION SYSTEM SEEP B
SECTION 4.2.3.2 FILTRATION SYSTEM FOR SEEP B

Problem / Change Description:
THE BERM IS TO BE CONSTRUCTED FROM THE SATURATED SOILS IN SEEP B. THE 6'-0" EDGE DISTANCE TO THE WATER (ON THE SLOPE) DOES NOT PROVIDE ENOUGH ROOM TO CONSTRUCT THE EARTHEN BERM TO PROVIDE STABILITY.

INITIATED BY	Signature: Martin Wilson	Organization: Morrison Knudsen	Date: 2-26-98

Resolution:
PLACE A BACKER OF ROCK IN WIRE MESH AT THE TOE OF THE BERM. THIS BACKER WILL PROVIDE STABILITY FOR THE SOIL DURING CONSTRUCTION AND SHOULD MINIMIZE THE POSSIBILITY OF WASHOUTS. SOIL & SOD CAN BE PLACED OVER MOST OF THE BACKER MINIMIZING THE HAZARD TO GOLF PLAY. SEE ATTACHED REVISED FIGURE 4-2.

If this FCR affects a subcontract, indicate ~~CID~~ number: N/A

APPROVAL BY MK PE	Signature:	Date: 2-26-98	Additional Reviews: By/Date
APPROVAL BY MK PjM	Signature:	Date: 2-26-98	
APPROVAL BY MK QC	Signature:	Date:	
APPROVAL BY ROICC/NTR or RPM	Signature:	Date:	

Regulator Approval/Notification Recommended:
Yes ☐ No ☐

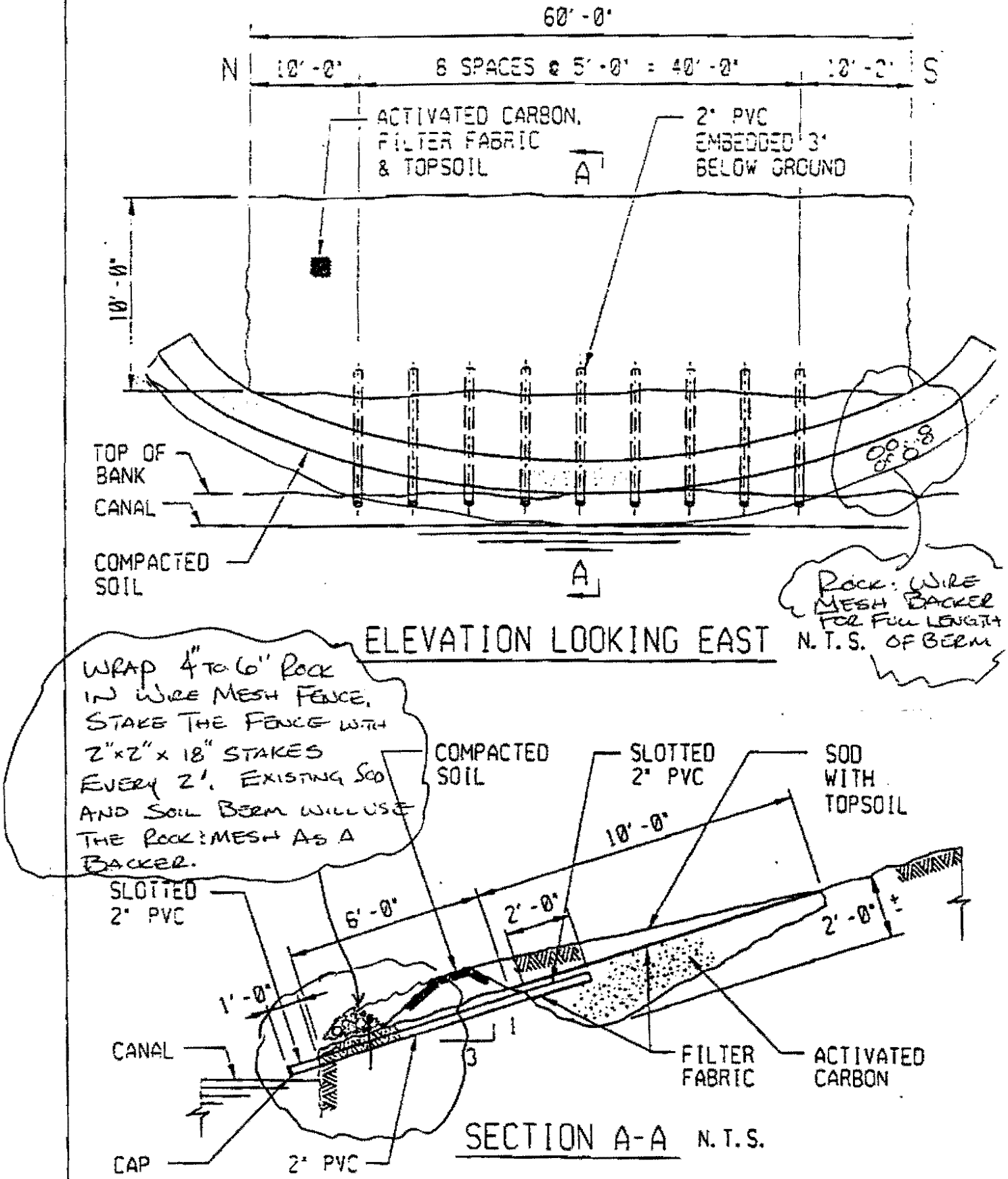

FIGURE 4-2
FILTRATION SYSTEM - SEEP B

MORRISON KNUDSEN CORPORATION
1500 WEST 3RD STREET

NAVFAC Southern Division/ Morrison Knudsen Corporation	District II RAC

FIELD CLARIFICATION REQUEST (FCR)

GULFPORT

Delivery Order No.: 02	Subcontract No: 432A-118	FCR No.: 02-004
SOW #009		Page 1 of 1

Reference Documents (Affected Document No., Revision No., Title):
WORK PLAN FIGURE C-1 SILT FENCE AT SEEP B

Problem / Change Description:
THE WORK PLAN CALLS FOR A SILT FENCE AS PICTORIALLY SHOWN IN FIGURE C-1 AS HAY BALES. DUE TO THE NARROW BAND BETWEEN THE EXCAVATION AND WATER, HAY BALES ARE NOT PRACTICAL. ALSO, THE BALES MAY HAVE TO BE DISPOSED OF AS WASTE IF CONTAMINATED.

INITIATED BY	Signature: MARTIN WILSON	Organization: MK	Date: 2-26-98

Resolution: USE GEOFABRIC, PREMADE SILT FENCE COMMONLY USED FOR EXCAVATIONS. THE GEOFABRIC ALLOWS THE WATER TO PASS AND HOLD SEDIMENTS. THE GEOFABRIC IS EASILY DISPOSED OF ALSO.

RECEIVED
FEB 27 1997
MK CORP

If this FCR affects a subcontract, indicate CID number: N/A

APPROVAL BY MK PE	Signature: For HAN MARTIN (EW)	Date: 2-26-98	Additional Reviews: By/Date
APPROVAL BY MK PjM	Signature:	Date: 2-26-98	
APPROVAL BY MK QC	Signature:	Date: 2-26-98	
APPROVAL BY ROICC/NTR or RPM	Signature:	Date: 2/27/98	

Regulator Approval/Notification Recommended:
Yes ☐ No ☐

16-1-02

NAVFAC Southern Division/ Morrison Knudsen Corporation	District II RAC

FIELD CLARIFICATION REQUEST (FCR)

GULFPORT

Delivery Order No.: 02	Subcontract No: 4324-118	FCR No.: C2-005
		Page 1 of 1

Reference Documents (Affected Document No., Revision No., Title):
WORK PLAN SECTION 4.2.3 1, FILTRATION SYSTEM FOR SEEP A
– GABIONS –

Problem / Change Description:
GABION BASKETS HAVE BEEN DIFFICULT TO LOCATE

INITIATED BY	Signature MARTIN WILSON	Organization: MORRISON KNUDSEN	Date: 3-2-98

Resolution: THE BASE ENVIRONMENTAL DEPT. HAS BEEN STORING EXCESS GABION MATTRESSES IN THEIR STORAGE YARD. THE NAVY WILL SUPPLY THE WIRE MESH MATTRESSES AND THE SUBCONTRACT WILL BE ADJUSTED ACCORDINGLY. MATTRESSES ARE APPROXIMATELY 6" THICK.

RECEIVED
MAR 03 1998
MK CORP

If this FCR affects a subcontract, indicate ~~CID~~ CCL number: 002

APPROVAL BY MK PE	Signature: FOR HAN MANG SIGNATURE ON FILE	Date: 3 2-98	Additional Reviews: By/Date
APPROVAL BY MK PjM	Signature:	Date: 3-2-98	
APPROVAL BY MK QC	Signature:	Date: 3-2-98	
APPROVAL BY ROICC/NTR or RPM	Signature:	Date: 3/3/98	16-1-02

Regulator Approval/Notification Recommended:
Yes ☐ No ☐

NAVFAC Southern Division/ Morrison Knudsen Corporation	District II RAC

FIELD CLARIFICATION REQUEST (FCR)

GULFPORT

Delivery Order No.: 02	Subcontract No: 4324-118	FCR No.: 02-005
		Page 1 of 1

Reference Documents (Affected Document No., Revision No., Title):
WORK PLAN SECTION 4.2.3.1, FILTRATION SYSTEM FOR SEEP A
– GABIONS –

Problem / Change Description:
GABION BASKETS HAVE BEEN DIFFICULT TO LOCATE

INITIATED BY	Signature: MARTIN WILSON	Organization: MORRISON KNUDSON	Date: 3-2-98

Resolution: THE BASE ENVIRONMENTAL DEPT. HAS BEEN STORING EXCESS GABION MATTRESSES IN THEIR STORAGE YARD. THE NAVY WILL SUPPLY THE WIRE MESH MATTRESSES AND THE SUBCONTRACT WILL BE ADJUSTED ACCORDINGLY. MATTRESSES ARE APPROXIMATELY 6" THICK.

Post-it™ brand fax transmittal memo 7671 | # of pages ▸ 1

FROM: To: HAL MAINE	Subject: To: M. WILSON
Co.	Co.
Dept.	Phone #
Fax #	Fax #

If this FCR affects :

APPROVAL BY MK PE	Signature:	Date: 3-2-98	Additional Reviews: By/Date
APPROVAL BY MK PjM	Signature:	Date: 3-2-98	
APPROVAL BY MK QC	Signature:	Date:	
APPROVAL BY ROICC/NTR or RPM	Signature:	Date:	16-1-02

Regulator Approval/Notification Recommended:
Yes ☐ No ☐

NAVFAC Southern Division/ Morrison Knudsen Corporation	District II RAC

FIELD CLARIFICATION REQUEST (FCR)

GULFPORT

Delivery Order No.: 02	Subcontract No: 4324-118	FCR No.: 02-006
		Page 1 of 2

Reference Documents (Affected Document No., Revision No., Title):
WORK PLAN

Problem / Change Description:
THE DRAINAGE FIELD TO THE SEEP A AREA IS LARGER THAN ORIGINALLY ANTICIPATED AND MORE WATER IS FLOWING INTO THE AREA THAN ORIGINALLY THOUGHT

INITIATED BY	Signature MARTIN WILSON	Organization: MORRISON KNUDSEN	Date: 3-6-98

Resolution: CONSTRUCT A DRAINAGE TRENCH AS SHOWN ON THE ATTACHED SKETCH.

RECEIVED
MAR 11 1998
MK CORP

If this FCR affects a subcontract, indicate CID number: —

APPROVAL BY MK PE	Signature: for	Date:	Additional Reviews: By/Date
APPROVAL BY MK PjM	Signature:	Date: 3-6-98	
APPROVAL BY MK QC	Signature:	Date: 3-6-98	
APPROVAL BY ROICC/NTR or RPM	Signature:	Date: 3-11-98	

Regulator Approval/Notification Recommended:
Yes ☐ No ☐

MORRISON KNUDSEN CORPORATION

ENVIRONMENTAL SERVICES DIVISION

Project DOZ NCBC GULFPORT	Contract No.	Sheet 1	File No. 16-1.02
Feature SEEP A	Designed M	Date 3-6-98	
Item DRAINAGE RELIEF	Checked	Date	

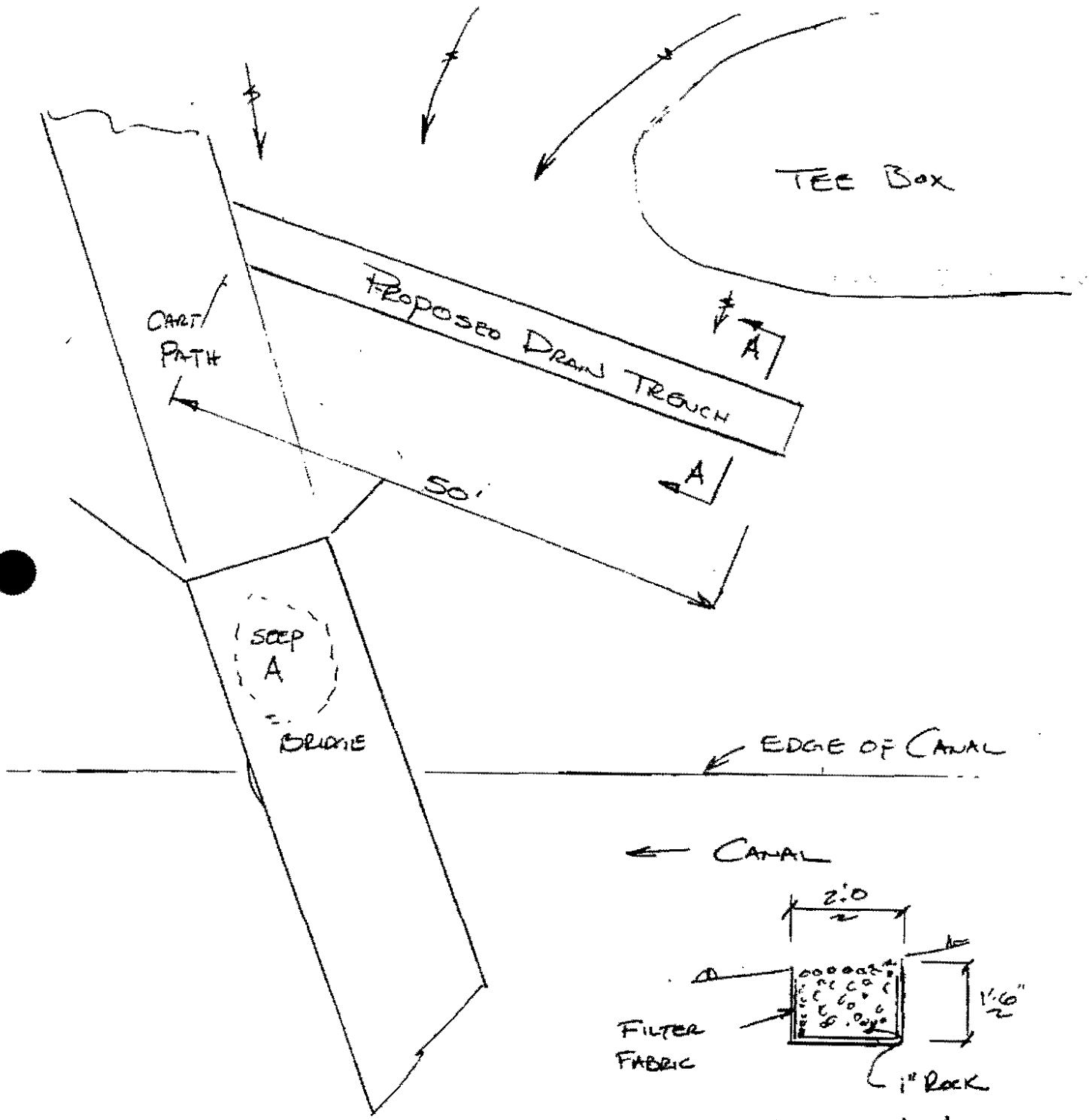

SEEP A PLAN

SECTION A-A

ENG128/91

#66621/91

NAVFAC Southern Division/ Morrison Knudsen Corporation	District II RAC

FIELD CLARIFICATION REQUEST (FCR)

GULFPORT

Delivery Order No.: 02	Subcontract No: 4324-118	FCR No.: 02-006
		Page 1 of 2

Reference Documents (Affected Document No., Revision No., Title):
WORK PLAN

Problem / Change Description:
THE DRAINAGE FIELD TO THE SEEP A AREA IS LARGER THAN ORIGINALLY ANTICIPATED AND MORE WATER IS FLOWING INTO THE AREA THAN ORIGINALLY THOUGHT

INITIATED BY	Signature: Martin Wilson	Organization: Morrison Knudsen	Date: 3-6-98

Resolution: CONSTRUCT A DRAINAGE TRENCH AS SHOWN ON THE ATTACHED SKETCH.

~~FROM~~
~~TO~~: HAN
MAUNG

~~FROM~~ TO M

If this FCR affects a subcontract, indicate CID number: —

APPROVAL BY MK PE	Signature: Hmaung	Date: 3-6-98	Additional Reviews: By/Date
APPROVAL BY MK PM	Signature:	Date: 3-6-98	
APPROVAL BY MK QC	Signature:	Date: 3-6-98	
APPROVAL BY ROICC/NTR or RPM	Signature:	Date:	

Regulator Approval/Notification Recommended:
Yes ☐ No ☐

APPENDIX D

LABORATORY RESULTS

APPENDIX D
LABORATORY RESULTS

INDEX

DESCRIPTION	PAGES
Seep Water	4 pages
Decontamination Liquid	10 pages

SOUTHWEST LABORATORY OF OKLAHOMA, INC.

1700 West Albany • Broken Arrow, Oklahoma 74012 • Office (918) 251-2858 • Fax (918) 251-2599

MORRISON KNUDSEN CORPORATION
NIK FERGUSON PLAZA
1500 WEST 3RD STREET
CLEVELAND, OH 44113
Attn: ALAN FOSDICK

REPORT: 33449.01

DATE: 04/17/98

SWLO # : 33449.01
SAMPLE #: B01
SAMPLE MATRIX : WATER
PROJECT : NCBC GULFPORT SITE 5
LOCATION: SEEPWATERM
METHOD REFERENCE: SW 8290

DEPTH FROM : 0.00
DEPTH TO : 0.00
DATE SAMPLED : 04/02/98
DATE RECEIVED : 04/03/98
DATE PREPARED : 04/06/98
DATE ANALYZED : 08/09/98
DILUTION FACTOR: 1.00

COMMENTS: SEEP WATER(M),NAVFAC-D02,GULFPORT, MS
DIOXIN/FURAN ANALYSIS
RESULTS REPORT IN pg/l

PARAMETER	RESULTS**		PARAMETER	RESULTS**	
2378-TCDD	3.36	U	234678-HXCDF	4.15	U
12378-PECDD	8.02	U	1234678-HPCDF	3.1	U
123478-HXCDD	6.8	U	1234789-HPCDF	3.64	U
123678-HXCDD	5.12	U	OCDF	4.46	U
123789-HXCDD	5.36	U	TOTAL TCDD	3.36	U
234678-HPCDD	7.28	U	TOTAL PECDD	8.02	U
DD	12.7		TOTAL HXCDD	5.12	U
78-TCDF	4.45	U	TOTAL HPCDD	7.28	U
12378-PECDF	4.74	U	TOTAL TCDF	4.45	U
23478-PECDF	4.58	U	TOTAL PECDF	4.58	U
123478-HXCDF	3.79	U	TOTAL HXCDF	3.27	U
123678-HXCDF	3.27	U	TOTAL HPCDF	3.1	U
123789-HXCDF	4.31	U			

QA/QC SURROGATE RECOVERIES

13C-2378-TCDD	(25-150)	87%	13C-12378-PECDD	(25-150)	97%
13C-123678-HXCDD	(25-150)	66%	13C-1234678-HPCDD	(25-150)	75%
13C-OCDD	(25-150)	72%	13C-2378-TCDF	(25-150)	78%
13C-12378-PECDF	(25-150)	72%	13C-123478-HXCDF	(25-150)	72%
13C-1234678-HPCDF	(25-150)	101%			

** RESULTS REPORTED TO A MAXIMUM OF 3 SIGNIFICANT FIGURES

Form 1

CLIENT ID.

B01

PCDD/PCDF ANALYSIS DATA SHEET
Use for Sample and Blank Results

Lab Name: Southwest Lab. of Oklahoma Episode No.: 33449

Lab Code: SWL Case No.: SDG No.: Lab Sample ID: 33449.01

Client Name: MKF-OH Sample Wt/Vol: 1000 g or mL: mL

Matrix (aqueous/solid/leachate): aqueous Initial Calibration Date: 02-04-98

Sample Receipt Date: 04-03-98 Instrument ID: AutoSpec

Ext. Date: 04-06-98 GC Column:DB-5

Ext. Vol(ul):20.0 Inj. Vol(ul):2.0 Sample Data Filename: A103955#4

Analysis Date: 9-APR-98 Time: 18:08:31 Blank Data Filename: A103955#3

Dilution Factor: 1 Cal. Ver. Data Filename: A103955#2

Concentration Units (pg/L or ng/Kg dry weight): pg/L % Moisture: n/a

ANALYTE	CONCENTRATION FOUND	DETECTION LIMIT	Qual. (1)	ION ABUND. RATIO (2)	RRT (2)	MEAN RRF
2,3,7,8-TCDD	*	3.361	U	*	*	1.22
1,2,3,7,8-PeCDD	*	8.020	U	*	*	1.18
1,2,3,4,7,8-HxCDD	*	6.808	U	*	*	0.75
1,2,3,6,7,8-HxCDD	*	5.106	U	*	*	1.00
1,2,3,7,8,9-HxCDD	*	5.358	U	*	*	0.95
1,2,3,4,6,7,8-HpCDD	*	7.284	U	*	*	1.07
OCDD	12.649	2.926	X	1.24	1.000	1.14
2,3,7,8-TCDF	*	4.454	U	*	*	0.96
1,2,3,7,8-PeCDF	*	4.739	U	*	*	0.97
2,3,4,7,8-PeCDF	*	4.582	U	*	*	1.01
1,2,3,4,7,8-HxCDF	*	3.787	U	*	*	1.06
1,2,3,6,7,8-HxCDF	*	3.271	U	*	*	1.23
1,2,3,7,8,9-HxCDF	*	4.311	U	*	*	0.93
2,3,4,6,7,8-HxCDF	*	4.152	U	*	*	0.97
1,2,3,4,6,7,8-HpCDF	*	3.095	U	*	*	1.36
1,2,3,4,7,8,9-HpCDF	*	3.638	U	*	*	1.16
OCDF	*	4.459	U	*	*	1.28
Total Tetra-Dioxins	*	3.361				
Total Penta-Dioxins	*	8.020				
Total Hexa-Dioxins	*	5.106				
Total Hepta-Dioxins	*	7.284				
Total Tetra-Furans	*	4.454				
Total Penta-Furans	*	4.582				
Total Hexa-Furans	*	3.271				
Total Hepta-Furans	*	3.095				

(1) Qualifier U indicates not detected; The X & I indicates EMPC. The C needs value from second column analysis. The B indicates possible blank contamination.
(2) RRTs and ion ratios are specified in Tables 11 and 8, Method 8290 8290F1

SOUTHWEST LABORATORY OF OKLAHOMA, INC.

1700 West Albany • Broken Arrow, Oklahoma 74012 • Office (918) 251-2858 • Fax (918) 251-2599

MORRISON KNUDSEN CORPORATION
NIK FERGUSON PLAZA
1500 WEST 3RD STREET
CLEVELAND, OH 44113
Attn: ALAN FOSDICK

REPORT: 33449.02

DATE: 04/17/98

SWLO # : 33449.02
SAMPLE #: A01
SAMPLE MATRIX : WATER
PROJECT : NCBC GULFPORT SITE 5
LOCATION: SEEPWATERA
METHOD REFERENCE: SW 8290

DEPTH FROM : 0.00
DEPTH TO : 0.00
DATE SAMPLED : 04/02/98
DATE RECEIVED : 04/03/98
DATE PREPARED : 04/06/98
DATE ANALYZED : 08/09/98
DILUTION FACTOR: 1.00

COMMENTS: SEEP WATER(A),NAVFAC-D02,GULFPORT, MS
DIOXIN/FURAN ANALYSIS
RESULTS REPORT IN pg/l

PARAMETER	RESULTS**		PARAMETER	RESULTS**	
2378-TCDD	7.17	U	234678-HXCDF	4.99	U
12378-PECDD	10.2	U	1234678-HPCDF	2.84	U
123478-HXCDD	7.1	U	1234789-HPCDF	3.34	U
123678-HXCDD	5.32	U	OCDF	5.16	U
123789-HXCDD	5.59	U	TOTAL TCDD	7.17	U
1234678-HPCDD	7.5	U	TOTAL PECDD	10.2	U
OCDD	3.42	U	TOTAL HXCDD	5.32	U
2378-TCDF	5.43	U	TOTAL HPCDD	7.5	U
12378-PECDF	7.24	U	TOTAL TCDF	5.43	U
23478-PECDF	7	U	TOTAL PECDF	7	U
123478-HXCDF	4.55	U	TOTAL HXCDF	3.93	U
123678-HXCDF	3.93	U	TOTAL HPCDF	2.84	U
123789-HXCDF	5.18	U			

QA/QC SURROGATE RECOVERIES

13C-2378-TCDD	(25-150)	76%	13C-12378-PECDD	(25-150)	89%
13C-123678-HXCDD	(25-150)	60%	13C-1234678-HPCDD	(25-150)	68%
13C-OCDD	(25-150)	64%	13C-2378-TCDF	(25-150)	68%
13C-12378-PECDF	(25-150)	65%	13C-123478-HXCDF	(25-150)	66%
13C-1234678-HPCDF	(25-150)	94%			

** RESULTS REPORTED TO A MAXIMUM OF 3 SIGNIFICANT FIGURES

Form 1

PCDD/PCDF ANALYSIS DATA SHEET
Use for Sample and Blank Results

CLIENT ID.
A01

Lab Name: Southwest Lab. of Oklahoma Episode No.: 33449

Lab Code: SWL Case No.: SDG No.: Lab Sample ID: 33449.02

Client Name: MKF-OH Sample Wt/Vol: 1000 g or mL: mL

Matrix (aqueous/solid/leachate): aqueous Initial Calibration Date: 02-04-98

Sample Receipt Date: 04-03-98 Instrument ID: AutoSpec

Ext. Date: 04-06-98 GC Column:DB-5

Ext. Vol(ul):20.0 Inj. Vol(ul):2.0 Sample Data Filename: A103955#5

Analysis Date: 9-APR-98 Time: 18:57:30 Blank Data Filename: A103955#3

Dilution Factor: 1 Cal. Ver. Data Filename: A103955#2

Concentration Units (pg/L or ng/Kg dry weight): pg/L % Moisture: n/a

ANALYTE	CONCENTRATION FOUND	DETECTION LIMIT	Qual. (1)	ION ABUND. RATIO (2)	RRT (2)	MEAN RRF
2,3,7,8-TCDD	*	7.166	U	*	*	1.22
1,2,3,7,8-PeCDD	*	10.225	U	*	*	1.18
1,2,3,4,7,8-HxCDD	*	7.098	U	*	*	0.75
1,2,3,6,7,8-HxCDD	*	5.323	U	*	*	1.00
1,2,3,7,8,9-HxCDD	*	5.586	U	*	*	0.95
1,2,3,4,6,7,8-HpCDD	*	7.503	U	*	*	1.07
OCDD	*	3.424	U	*	*	1.14
2,3,7,8-TCDF	*	5.428	U	*	*	0.96
1,2,3,7,8-PeCDF	*	7.237	U	*	*	0.97
2,3,4,7,8-PeCDF	*	6.997	U	*	*	1.01
1,2,3,4,7,8-HxCDF	*	4.548	U	*	*	1.06
1,2,3,6,7,8-HxCDF	*	3.928	U	*	*	1.23
1,2,3,7,8,9-HxCDF	*	5.176	U	*	*	0.93
2,3,4,6,7,8-HxCDF	*	4.985	U	*	*	0.97
1,2,3,4,6,7,8-HpCDF	*	2.845	U	*	*	1.36
1,2,3,4,7,8,9-HpCDF	*	3.345	U	*	*	1.16
OCDF	*	5.164	U	*	*	1.28
Total Tetra-Dioxins	*	7.166				
Total Penta-Dioxins	*	10.225				
Total Hexa-Dioxins	*	5.323				
Total Hepta-Dioxins	*	7.503				
Total Tetra-Furans	*	5.428				
Total Penta-Furans	*	6.997				
Total Hexa-Furans	*	3.928				
Total Hepta-Furans	*	2.845				

(1) Qualifier U indicates not detected; The X & I indicates EMPC. The C needs value from second column analysis. The B indicates possible blank contamination.
(2) RRTs and ion ratios are specified in Tables 11 and 8, Method 8290 8290F1

1A
VOLATILE ORGANICS ANALYSIS DATA SHEET

EPA SAMPLE NO.

009-DC

Lab Name: SWL-TULSA Contract: GULFPORT

Lab Code: SWOK Case No.: MKF-OH SAS No.: SDG No.: 33160

Matrix: (soil/water) WATER Lab Sample ID: 33160.01

Sample wt/vol: 5.0 (g/mL) ML Lab File ID: N30687.D

Level: (low/med) LOW Date Received: 03/16/98

% Moisture: not dec. _____ Date Analyzed: 03/17/98

Soil Extract Volume: _____(uL) Soil Aliquot Volume: _____(uL)

Column: (pack/cap) CAP Dilution Factor: 1.0

CAS NO.	COMPOUND	CONCENTRATION UNITS: (ug/L or ug/Kg) UG/L	Q
74-83-9	Bromomethane	10	U
75-01-4	Vinyl Chloride	10	U
75-09-2	Methylene Chloride	5	U
67-64-1	Acetone	12	
75-15-0	Carbon Disulfide	5	U
75-35-4	1,1-Dichloroethene	5	U
75-34-3	1,1-Dichloroethane	5	U
540-59-0	1,2-Dichloroethene (total)	5	U
67-66-3	Chloroform	5	U
107-06-2	1,2-Dichloroethane	5	U
78-93-3	2-Butanone	7	J
71-55-6	1,1,1-Trichloroethane	5	U
56-23-5	Carbon Tetrachloride	5	U
75-27-4	Bromodichloromethane	5	U
78-87-5	1,2-Dichloropropane	5	U
10061-01-5	cis-1,3-Dichloropropene	5	U
79-01-6	Trichloroethene	5	U
124-48-1	Dibromochloromethane	5	U
79-00-5	1,1,2-Trichloroethane	5	U
71-43-2	Benzene	5	U
10061-02-6	trans-1,3-Dichloropropene	5	U
75-25-2	Bromoform	5	U
108-10-1	4-Methyl-2-Pentanone	10	U
127-18-4	Tetrachloroethene	5	U
108-88-3	Toluene	5	U
79-34-5	1,1,2,2-Tetrachloroethane	5	U
108-90-7	Chlorobenzene	5	U
100-41-4	Ethylbenzene	5	U
100-42-5	Styrene	5	U
1330-20-7	Xylene (Total)	5	U

FORM I VOA

1A
VOLATILE ORGANICS ANALYSIS DATA SHEET

EPA SAMPLE NO.

009-TB

Lab Name: SWL-TULSA Contract: GULFPORT

Lab Code: SWOK Case No.: MKF-OH SAS No.: SDG No.: 33160

Matrix: (soil/water) WATER Lab Sample ID: 33160.04

Sample wt/vol: 5.0 (g/mL) ML Lab File ID: N30695.D

Level: (low/med) LOW Date Received: 03/16/98

% Moisture: not dec. _____ Date Analyzed: 03/18/98

Soil Extract Volume: _____(uL) Soil Aliquot Volume: _____(uL)

Column: (pack/cap) CAP Dilution Factor: 1.0

CAS NO.	COMPOUND	CONCENTRATION UNITS: (ug/L or ug/Kg) UG/L	Q
74-83-9	Bromomethane	10	U
75-01-4	Vinyl Chloride	10	U
75-09-2	Methylene Chloride	5	U
67-64-1	Acetone	10	U
75-15-0	Carbon Disulfide	5	U
75-35-4	1,1-Dichloroethene	5	U
75-34-3	1,1-Dichloroethane	5	U
540-59-0	1,2-Dichloroethene (total)	5	U
67-66-3	Chloroform	1	J
107-06-2	1,2-Dichloroethane	5	U
78-93-3	2-Butanone	10	U
71-55-6	1,1,1-Trichloroethane	5	U
56-23-5	Carbon Tetrachloride	5	U
75-27-4	Bromodichloromethane	2	J
78-87-5	1,2-Dichloropropane	5	U
10061-01-5	cis-1,3-Dichloropropene	5	U
79-01-6	Trichloroethene	5	U
124-48-1	Dibromochloromethane	5	U
79-00-5	1,1,2-Trichloroethane	5	U
71-43-2	Benzene	5	U
10061-02-6	trans-1,3-Dichloropropene	5	U
75-25-2	Bromoform	5	U
108-10-1	4-Methyl-2-Pentanone	10	U
127-18-4	Tetrachloroethene	5	U
108-88-3	Toluene	5	U
79-34-5	1,1,2,2-Tetrachloroethane	5	U
108-90-7	Chlorobenzene	5	U
100-41-4	Ethylbenzene	5	U
100-42-5	Styrene	5	U
1330-20-7	Xylene (Total)	5	U

FORM I VOA

Form 1

PCDD/PCDF ANALYSIS DATA SHEET
Use for Sample and Blank Results

CLIENT ID.
009-DC

Lab Name: Southwest Lab. of Oklahoma Episode No.: 33160

Lab Code: SWL Case No.: SDG No.: Lab Sample ID: 33160.01

Client Name: MKF-OH Sample Wt/Vol: 900 g or mL: mL

Matrix (aqueous/solid/leachate): aqueous Initial Calibration Date: 02-04-98

Sample Receipt Date: 03-16-98 Instrument ID: AutoSpec

Ext. Date: 03-18-98 GC Column:DB-5

Ext. Vol(ul):20.0 Inj. Vol(ul):2.0 Sample Data Filename: A103920#2

Analysis Date: 26-MAR-98 Time: 12:10:26 Blank Data Filename: A103920#1

Dilution Factor: 1 Cal. Ver. Data Filename: A103918#2

Concentration Units (pg/L or ng/Kg dry weight): pg/L % Moisture:

ANALYTE	CONCENTRATION FOUND	DETECTION LIMIT	Qual. (1)	ION ABUND. RATIO (2)	RRT (2)	MEAN RRF
2,3,7,8-TCDD	*	5.996	U	*	*	1.22
1,2,3,7,8-PeCDD	*	10.149	U	*	*	1.18
1,2,3,4,7,8-HxCDD	*	6.306	U	*	*	0.75
1,2,3,6,7,8-HxCDD	*	4.729	U	*	*	1.00
1,2,3,7,8,9-HxCDD	*	4.962	U	*	*	0.95
1,2,3,4,6,7,8-HpCDD	37.420	4.057		1.17	1.000	1.07
OCDD	320.815	4.172		0.85	1.000	1.14
2,3,7,8-TCDF	*	5.215	U	*	*	0.96
1,2,3,7,8-PeCDF	*	8.237	U	*	*	0.97
2,3,4,7,8-PeCDF	*	7.965	U	*	*	1.01
1,2,3,4,7,8-HxCDF	*	4.789	U	*	*	1.06
1,2,3,6,7,8-HxCDF	*	4.136	U	*	*	1.23
1,2,3,7,8,9-HxCDF	*	5.451	U	*	*	0.93
2,3,4,6,7,8-HxCDF	*	5.250	U	*	*	0.97
1,2,3,4,6,7,8-HpCDF	9.561	2.765	X	2.65	1.000	1.36
1,2,3,4,7,8,9-HpCDF	*	3.251	U	*	*	1.16
OCDF	18.159	5.114		0.95	1.003	1.28
Total Tetra-Dioxins	*	5.996				
Total Penta-Dioxins	*	10.149				
Total Hexa-Dioxins	*	4.729				
Total Hepta-Dioxins	37.420	4.057				
Total Tetra-Furans	16.188	5.215				
Total Penta-Furans	*	7.965				
Total Hexa-Furans	*	4.136				
Total Hepta-Furans	13.689	2.765				

(1) Qualifier U indicates not detected; The X & I indicates EMPC. The C needs value from second column analysis. The B indicates possible blank contamination.
(2) RRTs and ion ratios are specified in Tables 11 and 8, Method 8290 8290F1

1B
SEMIVOLATILE ORGANICS ANALYSIS DATA SHEET

EPA SAMPLE NO.

009-DC

Lab Name: SWL-TULSA Contract: NCBC GULFPO

Lab Code: SWOK Case No.: MKF-OH SAS No.: SDG No.: 33160

Matrix: (soil/water) WATER Lab Sample ID: 33160.01

Sample wt/vol: 1000 (g/mL) ML Lab File ID: M9494.D

Level: (low/med) LOW Date Received: 03/16/98

% Moisture: not dec. 0 dec. Date Extracted: 03/17/98

Extraction: (SepF/Cont/Sonc) CONT Date Analyzed: 03/23/98

Concentrated Extract Volume: 1000(uL)

GPC Cleanup: (Y/N) N pH: 7.2 Dilution Factor: 1.0

CAS NO.	COMPOUND	CONCENTRATION UNITS: (ug/L or ug/Kg) UG/L	Q
108-95-2	Phenol	6	J
111-44-4	bis(2-Chloroethyl)ether	10	U
95-57-8	2-Chlorophenol	10	U
106-46-7	1,4-Dichlorobenzene	10	U
95-50-1	1,2-Dichlorobenzene	10	U
95-48-7	2-Methylphenol	10	U
621-64-7	N-Nitroso-di-n-propylamine	10	U
67-72-1	Hexachloroethane	10	U
98-95-3	Nitrobenzene	10	U
78-59-1	Isophorone	10	U
105-67-9	2,4-Dimethylphenol	10	U
120-83-2	2,4-Dichlorophenol	10	U
120-82-1	1,2,4-Trichlorobenzene	10	U
91-20-3	Naphthalene	10	U
106-47-8	4-Chloroaniline	10	U
87-68-3	Hexachlorobutadiene	10	U
77-47-4	Hexachlorocyclopentadiene	10	U
88-06-2	2,4,6-Trichlorophenol	10	U
95-95-4	2,4,5-Trichlorophenol	50	U
131-11-3	Dimethylphthalate	10	U
606-20-2	2,6-Dinitrotoluene	10	U
83-32-9	Acenaphthene	10	U
121-14-2	2,4-Dinitrotoluene	10	U
51-28-5	2,4-Dinitrophenol	50	U
84-66-2	Diethylphthalate	10	U
86-73-7	Fluorene	10	U
86-30-6	N-Nitrosodiphenylamine (1)	10	U
118-74-1	Hexachlorobenzene	10	U
87-86-5	Pentachlorophenol	50	U
86-74-8	Carbazole	10	U
120-12-7	Anthracene	10	U
84-74-2	Di-n-butylphthalate	10	U
206-44-0	Fluoranthene	10	U

FORM I SV-1

1C
SEMIVOLATILE ORGANICS ANALYSIS DATA SHEET

EPA SAMPLE NO.

009-DC

Lab Name: SWL-TULSA Contract: NCBC GULFPO

Lab Code: SWOK Case No.: MKF-OH SAS No.: SDG No.: 33160

Matrix: (soil/water) WATER Lab Sample ID: 33160.01

Sample wt/vol: 1000 (g/mL) ML Lab File ID: M9494.D

Level: (low/med) LOW Date Received: 03/16/98

% Moisture: not dec. 0 dec. Date Extracted: 03/17/98

Extraction: (SepF/Cont/Sonc) CONT Date Analyzed: 03/23/98

Concentrated Extract Volume: 1000(uL)

GPC Cleanup: (Y/N) N pH: 7.2 Dilution Factor: 1.0

CAS NO.	COMPOUND	CONCENTRATION UNITS: (ug/L or ug/Kg) UG/L	Q
129-00-0	Pyrene	10	U
85-68-7	Butylbenzylphthalate	10	U
91-94-1	3,3'-Dichlorobenzidine	20	U
56-55-3	Benzo(a)anthracene	10	U
218-01-9	Chrysene	10	U
117-81-7	bis(2-Ethylhexyl)phthalate	1	JB
117-84-0	Di-n-octylphthalate	10	U
205-99-2	Benzo(b)fluoranthene	10	U
207-08-9	Benzo(k)fluoranthene	10	U
50-32-8	Benzo(a)pyrene	10	U
193-39-5	Indeno(1,2,3-cd)pyrene	10	U
53-70-3	Dibenz(a,h)anthracene	10	U

FORM I SV-2

1D
PESTICIDE ORGANICS ANALYSIS DATA SHEET

CLIENT SAMPLE NO.

009-DCDL

Lab Name: SWL-TULSA

Lab Code: SWOK Case No.: MKF-O SDG No.: 33160

Matrix: (soil/water) WATER Lab Sample ID: 33160.01DL

Sample wt/vol: 900 (g/mL) ML Lab File ID:_____

% Moisture: _____ decanted: (Y/N) __ Date Received: 03/16/98

Extraction: (SepF/Cont/Sonc) SEPF Date Extracted:03/17/98

Concentrated Extract Volume: 10000(uL) Date Analyzed: 03/31/98

Injection Volume: 1.0(uL) Dilution Factor: 10.0

GPC Cleanup: (Y/N) N pH: 7.6 Sulfur Cleanup: (Y/N) N

CAS NO.	COMPOUND	CONCENTRATION UNITS: (ug/L or ug/Kg) UG/L	Q
319-84-6	alpha-BHC	0.44	U
319-85-7	beta-BHC	0.44	U
319-86-8	delta-BHC	0.44	U
58-89-9	gamma-BHC (Lindane)	0.44	U
76-44-8	Heptachlor	0.015	DPJ
309-00-2	Aldrin	0.0041	DPJ
1024-57-3	Heptachlor epoxide	0.44	U
959-98-8	Endosulfan I	0.44	U
60-57-1	Dieldrin	0.028	DPJ
72-55-9	4,4'-DDE	0.018	DPJ
72-20-8	Endrin	0.89	U
33213-65-9	Endosulfan II	0.89	U
72-54-8	4,4'-DDD	0.89	U
1031-07-8	Endosulfan sulfate	0.89	U
50-29-3	4,4'-DDT	0.89	U
72-43-5	Methoxychlor	0.80	DJ
53494-70-5	Endrin ketone	0.89	U
7421-93-4	Endrin aldehyde	0.89	U
5103-71-9	alpha-Chlordane	0.016	DPJ
5103-74-2	gamma-Chlordane	0.024	DJ
8001-35-2	Toxaphene	28	U
12674-11-2	Aroclor-1016	11	U
11104-28-2	Aroclor-1221	11	U
11141-16-5	Aroclor-1232	11	U
53469-21-9	Aroclor-1242	11	U
12672-29-6	Aroclor-1248	11	U
11097-69-1	Aroclor-1254	22	U
11096-82-5	Aroclor-1260	22	U
Surrogate amount spiked		0.22	

FORM I PEST

1D

HERBICIDE ANALYSIS DATA SHEET

CLIENT ID:

009-DC

Lab Name: SWL-TULSA

Lab Code: SWOK Case No.: MKF-OH SDG: 33160

Matrix: (soil/water) WATER Lab Sample ID: 33160.01

Amt. Extd. (sample) 1000 mL Date Received: 03/16/98

Level: LOW % Moisture 0 Date Extracted: 03/18/98

Extraction method: SEP. FUNNEL Date Analyzed: 03/24/98

GPC clean-up (y/n) N pH: 7.2 Dilution Factor: 1

CAS NO.	COMPOUND	CONCENTRATION UNITS: (ug/L or ug/Kg) ug/L	Q
94-75-7	2,4-D	2.5	U
94-82-6	2,4-DB	4.5	U
93-72-1	2,4,5-TP (Silvex)	0.50	U
93-76-5	2,4,5-T	0.8	U
75-99-0	Dalapon	8.0	U
1918-00-9	Dicamba	1.0	U
120-36-5	Dichloroprop	1.5	U
88-85-7	Dinoseb	1.0	U
94-74-6	MCPA	100	U
93-65-2	MCPP	70	U

SURROGATE AMOUNT ADDED (ug/L) 7.5

FORM I

1

INORGANIC ANALYSES DATA SHEET

CLIENT SAMPLE ID

009-DC

Lab Name: SOUTHWEST_LAB_OF_OK_____ Contract:MKF-OH____
Lab Code: SWOK__ Case No.: 33160 SAS No.: _____ SDG No.: 33160_
Matrix (soil/water): WATER Lab Sample ID: 33160.01
Level (low/med): LOW__ Date Received: 03/16/98
% Solids: __0.0

Concentration Units (ug/L or mg/kg dry weight): UG/L_

CAS No.	Analyte	Concentration	C	Q	M
7440-38-2	Arsenic__	25.9			P
7440-39-3	Barium___	261			P
7440-43-9	Cadmium__	2.2	B		P
7440-47-3	Chromium_	49.7			P
7439-92-1	Lead_____	182		N	P
7439-97-6	Mercury__	0.45		N	AV
7782-49-2	Selenium_	8.4			P
7440-22-4	Silver___	1.0	U		P

Color Before: COLORLESS Clarity Before: CLEAR_ Texture: _____
Color After: YELLOW___ Clarity After: CLEAR_ Artifacts: _____

Comments:

SOUTHWEST LABORATORY OF OKLAHOMA, INC.

1700 West Albany • Broken Arrow, Oklahoma 74012 • Office (918) 251-2858 • Fax (918) 251-2599

MORRISON KNUDSEN CORPORATION
MK-FERGUSON PLAZA
1300 WEST 3RD STREET
CLEVELAND, OH 44113
Attn: ALAN FOSDICK

REPORT: 33160.01

DATE: 04/08/98

SWLO # : 33160.01
SAMPLE #: 009-DC
SAMPLE MATRIX : WATER
PROJECT : NCBC GULFPORT SITE 5
LOCATION:

DEPTH FROM : 0.00
DEPTH TO : 0.00
DATE SAMPLED : 03/13/98
DATE RECEIVED : 03/16/98

HAZARDOUS WASTE CHARACTERIZATION

PARAMETER	RESULTS**		UNITS	DATE PREPARED	DATE ANALYZED	REFERENCE METHOD
IGNITABILITY	200	>	Deg.F	/ /	03/25/98	PMCC

**RESULTS REPORTED TO A MAXIMUM OF 3 SIGNIFICANT FIGURES

SOUTHWEST LABORATORY OF OKLAHOMA, INC.

1700 West Albany • Broken Arrow, Oklahoma 74012 • Office (918) 251-2858 • Fax (918) 251-2599

MORRISON KNUDSEN CORPORATION
MK-FERGUSON PLAZA
1300 WEST 3RD STREET
CLEVELAND, OH 44113
Attn: ALAN FOSDICK

REPORT: 33160.01

DATE: 04/08/98

SWLO # : 33160.01
SAMPLE #: 009-DC
SAMPLE MATRIX : WATER
PROJECT : NCBC GULFPORT SITE 5
LOCATION:

DEPTH FROM : 0.00
DEPTH TO : 0.00
DATE SAMPLED : 03/13/98
DATE RECEIVED : 03/16/98

MISCELLANEOUS

PARAMETER	RESULTS**		UNITS	DATE PREPARED	DATE ANALYZED	REFERENCE METHOD
REACTIVE CYANIDE	5	U	mg/l	03/17/98	03/17/98	SW 7.3.3.2
PH	7.3		su	/ /	03/16/98	SM 4500H/EPA 150.1
REACTIVE SULFIDE	4	U	mg/l	/ /	03/17/98	SW 7.3.4.2

**RESULTS REPORTED TO A MAXIMUM OF 3 SIGNIFICANT FIGURES

APPENDIX E

CHAIN-OF-CUSTODY FORMS

APPENDIX E
CHAIN-OF-CUSTODY FORMS

INDEX

DESCRIPTION	PAGES
Chain of Custody Record	2 pages

CHAIN OF CUSTODY RECORD

SOUTHWEST LABORATORY OF OKLAHOMA, INC.
1700 W. Albany • Broken Arrow, Oklahoma 74012-1421
Office: 918-251-2858 • Fax 918-251-2599

TM

SAMPLING FIRM	CLIENT CONTACT	PHONE NUMBER
M-K	ALAN FOSDICK	(216) 523 3316

P.O. or PROPOSAL NUMBER	PROJECT NAME
	NAVFAC - DOZ, GULFPORT MS

SAMPLER: (Signature) [signature]

ANALYTICAL TESTS REQUESTED

SAMPLE ID	DATE	TIME	COMP	GRAB	LOCATION	MATRIX	NUMBER OF CONTAINERS	DIOXIN/FURANS								REMARKS
B01	4-2-98	10:30		✓	SEEP WATER (A)	W	2	X								
A01	4-2-98	11:30		✓	SEEP WATER (A)	W	2	X								

RELINQUISHED BY: (Signature)	DATE	TIME	RECEIVED BY: (Signature)	RELINQUISHED BY: (Signature)	DATE	TIME	RECEIVED BY: (Signature)
[signature]	4/2/98	12:00					

RELINQUISHED BY: (Signature)	DATE	TIME	RECEIVED BY: (Signature)	RELINQUISHED BY: (Signature)	DATE	TIME	RECEIVED FOR LABORATORY BY: (Signature)
					4/3/98	9:15	S. Hodson.

RELINQUISHED BY: (Signature)	DATE	TIME	RECEIVED BY: (Signature)	REMARKS:

[SR012-1192-03]

80

CHAIN OF CUSTODY RECORD

SOUTHWEST LABORATORY OF OKLAHOMA, INC.
1700 W. Albany • Broken Arrow, Oklahoma 74012-1421
Office: 918-251-2858 • Fax 918-251-2589

SAMPLING FIRM: A&S Environmental
CLIENT CONTACT: Alan Fosdick
PHONE NUMBER: (216) 523 3316
P.O. or PROPOSAL NUMBER:
PROJECT NAME: NAVFAC - DOZ, Gulfport MS

SAMPLER: (Signature)

ANALYTICAL TESTS REQUESTED

SAMPLE ID	DATE	TIME	COMP	GRAB	LOCATION	MATRIX	NUMBER OF CONTAINERS	VOC	Dioxin/Furans	Pesticides	Herbicides	SVOC	RCRA Metals	Ignitability	Corrosivity	Sulfide/Phenol	Cyanide/Total	REMARKS
~~009-TB~~	~~3-13-98~~	~~15:10~~		~~✓~~	~~Decontaminated~~	~~WTR~~	~~24~~	X										3-13-98
009-DC	3-13-98	1510		✓	"	W	22	X	X	X	X	X	X	X	X	X	X	
009-TB	3-13-98	1510		✓	Trip Blank		2	X										

RELINQUISHED BY (Signature)	DATE	TIME	RECEIVED BY: (Signature)	RELINQUISHED BY: (Signature)	DATE	TIME	RECEIVED BY (Signature)
	3/13/98	4:10					

RELINQUISHED BY (Signature)	DATE	TIME	RECEIVED BY. (Signature)	RELINQUISHED BY (Signature)	DATE	TIME	RECEIVED FOR LABORATORY BY (Signature)
	3/13/98	4:30			3/16/98	0932	

RELINQUISHED BY (Signature)	DATE	TIME	RECEIVED BY (Signature)	REMARKS:

6:

R012-1192-03