N62604.AR.001221
NCBC GULFPORT
5090.3a

REMEDIAL INVESTIGATION FEASIBILITY STUDY WORKPLAN VOLUME 1 OF 3 NCBC GULFPORT MS
12/1/1993
ABB ENVIRONMENTAL

NAVAL CONSTRUCTION BATTALION CENTER
GULFPORT, MISSISSIPPI

RI/FS WORKPLAN
VOLUME I

UIC NO.: N62604

CTO NO.: 17

Contract No. N62467-89-D-0317

Prepared by:

ABB Environmental Services, Inc.
1400 Centerpoint Blvd., Suite 158
Knoxville, Tennessee 37932-1968

Prepared for:

Department of the Navy, Southern Division
Naval Facilities Engineering Command
2155 Eagle Drive
North Charleston, South Carolina 29418

December 1993

FOREWORD

In accordance with the Comprehensive Environmental Response, Compensation, and Liability Act (CERCLA) of 1980, as amended by the 1986 Superfund Amendments and Reauthorization Act (SARA), the 1976 Resource Conservation and Recovery Act (RCRA), as augmented by the 1984 Hazardous and Solid Waste Amendments (HSWA), and as directed in Executive Order 12580 of January 1987, the Department of Defense (DOD) conducts an Installation Restoration (IR) Program for evaluating and remediating problems related to releases and disposal of toxic and hazardous materials at DOD facilities.

The Naval Assessment and Control of Installation Pollutants (NACIP) program was developed by the Navy to implement the IR Program for all Naval and Marine Corps facilities. The NACIP program was originally conducted in three phases: (1) Phase I, Initial Assessment Study, (2) Phase II, Confirmation Study (including a Verification Step and a Characterization Step), and (3) Phase III, Planning and Implementation of Remedial Measures. The three-phase IR Program was modified and updated to be congruent with CERCLA/SARA and RCRA/HSWA driven DOD IR program.

The updated nomenclature for the RCRA/SARA process is as follows:

- Preliminary Assessment and Site Inspection,
- Remedial Investigation,
- Feasibility Study, and
- Planning and Implementation of Remedial Design.

Southern Division Naval Facilities Engineering Command (SOUTHNAVFACENGCOM) has the responsibility for implementation of the Navy and Marine Corps IR Program in the southeastern and midwestern United States. Questions regarding this report should be addressed to the SOUTHNAVFACENGCOM Engineer-in-Charge, Mr. Ken Barnes (Code 1865), at (803) 743-0669.

EXECUTIVE SUMMARY

A Remedial Investigation/Feasibility Study (RI/FS) is planned on selected sites at the Naval Construction Battalion Center (NCBC), Gulfport, Mississippi. The RI/FS will be conducted in accordance with the Comprehensive Environmental Response, Compensation, and Liability Act (CERCLA) as amended by the 1986 Superfund Amendments and Reauthorization Act (SARA). The process will consist of:

- Preliminary Assessment and Site Inspection,
- Remedial Investigation,
- Feasibility Study, and
- Record of Decision (ROD).

ABB Environmental Services, Inc. (ABB-ES), was contracted under the Comprehensive Long-Term Environmental Action, Navy (CLEAN) contract (contract Number N62467-89-0-0317, Contact Task Order [CTO] Number 17) to prepare the RI/FS Workplan; Sampling and Analysis Plan (SAP), which includes the Field Sampling Plan (FSP) and the Quality Assurance Project Plan (QAPP); Health and Safety Plan (HASP); and Community Relations Plan (CRP). Together the three volumes present the scope of the RI/FS process.

The Workplan (Volume I) addresses the discussion of the sites, provides a record of site history, describes regional environmental factors, details previous investigative results, describes RI/FS tasks, and describes site-specific investigative methodology, project organization, and schedule.

The SAP (Volume II) focuses on field investigations, analytical methods, and quality assurance/quality control (QA/QC) procedures. The SAP provides a project description, describes site management and field methods, details the technical approach and sampling plans for each site, and describes quality assurance and quality control requirements for sample collection, sample analysis, data assessment, corrective action, and reporting.

The HASP (Volume III) outlines health and safety procedures for field tasks. The HASP includes material safety data sheets for chemicals that may be encountered at the site and provides emergency information and telephone numbers.

The CRP describes procedures for public meetings, public comment, and methods of keeping the community informed.

The objectives of the RI are to collect sufficient data to: characterize and quantify the extent of contamination, to assess potential risks to human health and the environment posed by contaminants of concern, to support an FS at sources of contamination where remedial action is warranted, and to support a ROD at all sites.

The FS is designed to evaluate remedial alternatives, conduct treatability studies, and design remedial actions. Remedial actions are performed to mitigate threats to human health and the environment by removing, containing, or treating contaminated matrices to established target levels.

Two previous investigations were conducted at NCBC Gulfport, the Initial Assessment Study (IAS) and Verification Study. From these investigative studies,

it was determined that six landfill and rubble disposal areas and one site containing two former burn pits require evaluation under the RI/FS process. The IAS provided information concerning the types and quantities of wastes reportedly disposed and methods of disposal at each site. During the Verification Study, 18 monitoring wells were installed; soil, groundwater, and surface water sampling was performed; and geophysical surveys were conducted. The data generated during the Verification Study are insufficient to adequately characterize the nature and extent of contamination.

The remedial investigation activities proposed within this workplan were selected to obtain three primary objectives: (1) to determine the location and orientation of the landfill and rubble disposal areas and the burn pits; (2) to determine the composition, magnitude, and extent of soil contamination; and (3) to determine the composition, magnitude, and extent of groundwater and surface water contamination. These objectives will be accomplished by analysis of aerial photographs, more extensive geophysical surveying, TerraProbe sampling, subsurface soil boring and sampling, surface soil sampling, sediment sampling, screening of existing monitoring wells, monitoring well installation and sampling, surface water sampling, and chemical analyses. For health and safety reasons, invasive sampling techniques performed within the boundaries of the disposal areas will be limited.

In addition to field screening and sampling activities, an ecological and population survey and a public health survey will be conducted. The ecological and population survey will be performed to identify potential receptors, to provide data for wetland and floodplain assessments, and to evaluate potential risk assessment exposure pathways. The public health survey will be conducted to examine on-base and off-base communities, activities, and drinking water sources. All of the information and data gathered from these activities will be evaluated for applicability and used to conduct a Baseline Risk Assessment to determine if the potential contaminants of each of the seven sites pose a risk to human and/or ecological receptors.

Final data interpretation of the remedial investigation activities will conclude with an evaluation of the degree and distribution of contamination, if present, and a recommendation for one of the following:

- take no further action or initiate long-term monitoring and prepare a Record of Decision,
- perform source removal or migration mitigation (interim or early remedial action),
- obtain additional RI data needed for adequate characterization,
- conduct a Focused Feasibility Study,
- conduct Treatability Studies, and/or
- conduct a Feasibility Study.

Should a Feasibility Study be warranted, the study will include a compilation of Applicable or Relevant and Appropriate Requirements (ARARs), development of remedial alternatives, screening of remedial alternatives, detailed analysis of remedial alternatives, an engineering description of selected remedial alternatives, RI/FS reports, proposed plans, public meetings, and a ROD.

ACKNOWLEDGEMENTS

In preparing this report, the personnel at ABB Environmental Services, Inc., commend the support, assistance, and cooperation provided by the personnel at NCBC Gulfport and SOUTHNAVFACENGCOM. In particular, we acknowledge the outstanding effort, dedication, and professionalism provided by the following people in the preparation of this report.

Name	Title	Position	Location
Ken Barnes	Engineer	Engineer-in-Charge	SOUTHNAVFACENGCOM
Gordon Crane	Environmental Coordinator	Environmental Coordinator	NCBC Gulfport

Naval Construction Battalion Center
Gulfport, Mississippi
RI/FS Workplan
Volume I

TABLE OF CONTENTS

Section	Description	Page
DISTRIBUTION		i
TITLE PAGE		ii
FOREWORD		iii
EXECUTIVE SUMMARY		iv
ACKNOWLEDGEMENTS		vi
GLOSSARY OF ACRONYMS AND ABBREVIATIONS		xiii
1.0	INTRODUCTION	1-1
1.1	PURPOSE AND REGULATORY SETTING	1-1
1.2	POTENTIAL SOURCES OF CONTAMINATION	1-3
1.3	OVERVIEW OF PLANNING DOCUMENTS (VOLUMES I THROUGH III)	1-3
2.0	FACILITY BACKGROUND	2-1
2.1	SITE LOCATION AND LAND USE	2-1
2.1.1	Site Operations	2-1
2.1.2	Adjacent Land Use	2-1
2.2	SITE HISTORY	2-1
2.3	ENVIRONMENTAL DESCRIPTION	2-5
2.3.1	Climatology	2-5
2.3.2	Topography, Surface Water, and Drainage	2-6
2.3.2.1	Topography	2-6
2.3.2.2	Surface Water and Drainage	2-6
2.3.3	Regional Geology and Soils	2-6
2.3.3.1	Geology	2-6
2.3.3.2	Soils	2-8
2.3.4	Wetlands	2-8
2.3.5	Regional Hydrogeology	2-18
2.3.5.1	Surficial Aquifer	2-18
2.3.5.2	Citronelle Formation	2-18
2.3.5.3	Miocene Aquifer	2-19
2.3.6	Water Supply	2-19
2.4	SITE DESCRIPTIONS	2-20
2.4.1	Site 1, Disaster Recovery Disposal Area	2-20
2.4.2	Site 2, World War II (WWII) Landfill	2-20
2.4.3	Site 3, Northwest Landfill and Burn Pit	2-27
2.4.4	Site 4, Golf Course Landfill	2-27
2.4.5	Site 5, Heavy Equipment Training Area Landfill	2-27
2.4.6	Site 6, Fire-Fighting Training Area	2-28
2.4.7	Site 7, Rubble Disposal Area	2-28
2.5	PREVIOUS INVESTIGATIONS	2-28
2.5.1	Initial Assessment Study	2-28
2.5.2	Verification Study	2-29
2.5.2.1	Site 1, Disaster Recovery Disposal Area	2-29

TABLE OF CONTENTS (continued)

Section	Description	Page
	2.5.2.2 Site 2, WWII Landfill, and Site 7, Rubble Disposal Area	2-40
	2.5.2.3 Site 3, Northwest Landfill and Burn Pit	2-45
	2.5.2.4 Site 4, Golf Course Landfill	2-45
	2.5.2.5 Site 5, Heavy Equipment Training Area Landfill	2-51
	2.5.2.6 Site 6, Fire-Fighting Training Area	2-51
3.0	GENERAL DESCRIPTION OF REMEDIAL INVESTIGATION/FEASIBILITY STUDY TASKS	3-1
3.1	DATA QUALITY OBJECTIVES	3-1
	3.1.1 DQOs, General Description	3-1
	3.1.2 Task Specific DQOs	3-3
	3.1.3 Precision, Accuracy, Representativeness, Completeness, and Comparability Definition	3-4
3.2	PRELIMINARY ACTIVITIES	3-6
	3.2.1 Subcontractor Coordination	3-6
	3.2.2 Permitting, Authorization, and Site Access	3-6
	3.2.3 Utility Identification and Location	3-6
3.3	COMMUNITY RELATIONS	3-6
3.4	GENERAL DESCRIPTION OF FIELD INVESTIGATIVE TASKS	3-6
	3.4.1 Exploratory Geophysics Program	3-7
	3.4.2 Subsurface Exploration and Sampling	3-7
	3.4.2.1 TerraProbe Soil Sampling	3-7
	3.4.2.2 Soil Borings	3-8
	3.4.2.3 Surface Soil Sampling	3-9
	3.4.3 Monitoring Well Installation	3-9
	3.4.4 Groundwater Sampling	3-10
	3.4.5 Surface Water and Sediment Sampling	3-10
	3.4.6 Aquifer Characterization	3-10
	3.4.7 Ecological and Public Health Surveys	3-11
	3.4.7.1 Ecological Survey	3-11
	3.4.7.2 Public Health Survey	3-12
	3.4.8 Topographic and Water Elevation Survey	3-12
	3.4.9 Decontamination Procedures	3-12
	3.4.10 Investigation-Derived Wastes	3-12
3.5	LABORATORY ANALYSIS	3-14
3.6	DATA ASSESSMENT	3-16
	3.6.1 Screening Data	3-16
	3.6.2 Laboratory Data Validation	3-16
	3.6.3 Data Management Plan	3-19
	3.6.4 Data Evaluation	3-20
	3.6.5 Evaluation of Data Gaps	3-20
	3.6.6 Address Data Gaps	3-21
3.7	BASELINE RISK ASSESSMENT	3-21
	3.7.1 Data Evaluation and Summarization	3-22
	3.7.2 Human-Health Risk Assessment	3-23
	3.7.2.1 Identification of Contaminants of Potential Concern	3-23
	3.7.2.2 Exposure Assessment	3-27

TABLE OF CONTENTS (continued)

Section	Description	Page
	3.7.2.3 Toxicity Assessment	3-34
	3.7.2.4 Risk Characterization	3-35
	3.7.3 Ecological Risk Assessment	3-38
	3.7.3.1 Biological Characterization	3-39
	3.7.3.2 Identification of Chemicals of Potential Concern	3-42
	3.7.3.3 Ecological Exposure Assessment	3-42
	3.7.3.4 Ecotoxicity Assessment	3-52
	3.7.3.5 Ecological Risk Characterization	3-53
3.8	PROJECT MANAGER MEETINGS	3-55
3.9	FEASIBILITY STUDY PROCESS	3-55
	3.9.1 Applicable or Relevant and Appropriate Requirements	3-56
	3.9.2 Development of Remedial Alternatives	3-58
	3.9.2.1 Development of Remedial Response Objectives	3-58
	3.9.2.2 Development of General Response Actions	3-58
	3.9.2.3 Identification and Screening of Applicable Remedial Technologies	3-58
	3.9.2.4 Assembly of Remedial Alternatives	3-59
	3.9.3 Screening of Remedial Alternatives	3-59
	3.9.4 Detailed Analysis of Remedial Alternatives	3-60
3.10	RI/FS REPORTS	3-61
3.11	RECORD OF DECISION	3-61
4.0	TECHNICAL APPROACH	4-1
4.1	BACKGROUND/BASE-WIDE SAMPLING.	4-1
	4.1.1 Description and Background	4-1
	4.1.2 Rationale and Technical Approach	4-2
	4.1.3 Proposed Investigation	4-2
4.2	CHARACTERIZATION OF FIRST CONFINED AQUIFER	4-5
	4.2.1 Description and Background	4-5
	4.2.2 Rationale for Technical Approach	4-5
	4.2.3 Proposed Investigation	4-5
4.3	SITE 1, DISASTER RECOVERY DISPOSAL AREA	4-6
	4.3.1 Description and Background	4-6
	4.3.2 Rationale for Technical Approach	4-8
	4.3.3 Proposed Investigation	4-9
4.4	SITE 2, WW II LANDFILL	4-16
	4.4.1 Description and Background	4-16
	4.4.2 Rationale for Technical Approach	4-17
	4.4.3 Proposed Investigation	4-18
4.5	SITE 3, NORTHWEST LANDFILL AND BURN PIT	4-22
	4.5.1 Description and Background	4-22
	4.5.2 Rationale for Technical Approach	4-23
	4.5.3 Proposed Investigation	4-24
4.6	SITE 4, GOLF COURSE LANDFILL	4-30
	4.6.1 Description and Background	4-30
	4.6.2 Rationale for Technical Approach	4-30
	4.6.3 Proposed Investigation	4-31
4.7	SITE 5, HEAVY EQUIPMENT TRAINING AREA LANDFILL	4-37

TABLE OF CONTENTS (continued)

Section	Description	Page
4.7.1	Description and Background	4-37
4.7.2	Rationale for Technical Approach	4-37
4.7.3	Proposed Investigation	4-38
4.8	SITE 6, FIRE-FIGHTING TRAINING AREA	4-44
4.8.1	Description and Background	4-44
4.8.2	Rationale for Technical Approach	4-45
4.8.3	Proposed Investigation	4-45
4.9	SITE 7, RUBBLE DISPOSAL AREA	4-51
4.9.1	Description and Background	4-51
4.9.2	Rationale for Technical Approach	4-52
4.9.3	Proposed Investigation	4-53
4.10	INVESTIGATION ACTIVITIES COMMON TO ALL SITES	4-56
4.10.1	Aquifer Characterization	4-56
4.10.2	Screening of Groundwater Samples	4-57
4.10.3	Ecological Survey	4-57
4.10.4	Public Health Survey	4-57
4.10.5	Survey of Sampling Locations	4-58
4.10.6	Decontamination	4-58
4.11	SUMMARY OF SURVEY AND SAMPLING INVESTIGATIONS	4-58
5.0	PROJECT MANAGEMENT	5-1
5.1	ORGANIZATION	5-1
5.1.1	Project Organization	5-1
5.1.2	Program Organization	5-3
5.2	PROJECT SCHEDULE	5-5
References		Ref-1
Appendix A	Verification Study Boring Logs	A-1
Appendix B	Justification for Use of PVC	B-1
Appendix C	USEPA SOPs for Monitoring Well Installations	C-1
Appendix D	Southern Division Guidelines for Monitoring Well Installations	D-1
Appendix E	USEPA Reporting Requirements for Data	E-1
Appendix F	Preliminary Checklist of Federal ARARs	F-1
Appendix G	Federal Water Quality Standards and Criteria	G-1
Appendix H	Summary Data Needs Per Remedial Technology	H-1

LIST OF FIGURES

Figure	Description	Page
Figure 1-1	NCBC Gulfport Location	1-2
Figure 2-1	NCBC Layout and Site Locations	2-3
Figure 2-2	Adjacent Land Use Map	2-4
Figure 2-3	NCBC Surface Water Drainage System	2-7
Figure 2-4	Geologic Map	2-10
Figure 2-5	Cross Section GPT-4-2 to GPT-1-2	2-11
Figure 2-6	Cross Section GPT-5-1 to GPT-2-3	2-12
Figure 2-7	Fence Diagram	2-13
Figure 2-8	Geologic Cross Section Location Diagram	2-15
Figure 2-9	NCBC General Soils Map	2-16
Figure 2-10	NCBC Wetlands Map	2-17
Figure 2-11	Site Location Plan	2-26
Figure 2-12	Sampling and Monitoring Well Locations from Previous Investigations, Site 1	2-39
Figure 2-13	Sampling and Monitoring Well Locations from Previous Investigations, Site 2	2-44
Figure 2-14	Sampling and Monitoring Well Locations from Previous Investigations, Site 3	2-47
Figure 2-15	Sampling and Monitoring Well Locations from Previous Investigations, Site 4	2-50
Figure 2-16	Sampling and Monitoring Well Locations from Previous Investigations, Site 5	2-53
Figure 2-17	Sampling and Monitoring Well Locations from Previous Investigations, Site 6	2-56
Figure 4-1	Background/Base-Wide Sampling and Monitoring Locations	4-3
Figure 4-2	Proposed Locations of Remedial Investigation Activities - Site 1	4-10
Figure 4-3	Map of Potentiometric Surface of Surficial Aquifer (3/30/87)	4-13
Figure 4-4	Map of Potentiometric Surface of Surficial Aquifer (10/31/91)	4-14
Figure 4-5	Proposed Locations of Remedial Investigation Activities - Site 2 and Site 7	4-19
Figure 4-6	Proposed Locations of Remedial Investigation Activities - Site 3	4-26
Figure 4-7	Proposed Locations of Remedial Investigation Activities - Site 4	4-33
Figure 4-8	Proposed Locations of Remedial Investigation Activities - Site 5	4-40
Figure 4-9	Proposed TerraProbe Sample Locations and Area of Geophysical Survey - Site 6	4-47
Figure 4-10	Proposed Locations of Remedial Investigation Activities - Site 6	4-48
Figure 5-1	Project Organization	5-2
Figure 5-2	Program Organization	5-4

LIST OF TABLES

Table	Description	Page
Table 2-1	Geologic Formations in the Gulfport, Mississippi, Area	2-9
Table 2-2	Water Wells Within a 2-Mile Radius of NCBC Gulfport, Mississippi	2-21
Table 2-3	Groundwater Monitoring Well Construction	2-30
Table 2-4	Groundwater Level Measurements and Elevations	2-32
Table 2-5	Chemical and Physical Parameters Identified for Analysis of Sediment, Soil, and Water Samples	2-33
Table 2-6	Summary of Chemical Analysis Results, Activity Potable Wells	2-37
Table 2-7	Summary of Chemical Analysis Results, Field and Laboratory Control Samples	2-38
Table 2-8	Summary of Chemical Analysis Results, Site 1	2-41
Table 2-9	Summary of Chemical Analysis Results, Sites 2	2-46
Table 2-10	Summary of Chemical Analysis Results, Site 3	2-48
Table 2-11	Summary of Chemical Analysis Results, Site 4	2-52
Table 2-12	Summary of Chemical Analysis Results, Site 5	2-54
Table 2-13	Summary of Chemical Analysis Results, Site 6	2-58
Table 3-1	Laboratory Analytical Program RI/FS Workplan NCBC Gulfport Gulfport, Mississippi	3-15
Table 3-2	Range of Detected Contaminants, 1987 Sampling (HLA, 1987) RI/FS Workplan NCBC Gulfport Gulfport, Mississippi	3-24
Table 3-3	Preliminary Contaminants of Potential Concern RI/FS Workplan NCBC Gulfport Gulfport, Mississippi	3-25
Table 3-4	Matrix of Potential Current and Future Exposure Pathways	3-30
Table 3-5	Default Exposure Parameters	3-33
Table 3-6	Oral Toxicity Values for Chemicals of Potential Concern	3-36
Table 3-7	List of Common Flora Occurring in Plant Communities Near NCBC Gulfport	3-40
Table 3-8	Fauna Potentially Inhabiting the NCBC Gulfport Area	3-43
Table 3-9	List of Endangered, Threatened, and Rare Flora and Fauna of the Coastal Pine Meadows Region	3-47
Table 3-10	Ecological Exposure Parameters, Example Table	3-51
Table 3-11	Reference Toxicity Values for Aquatic Organisms	3-54
Table 4-1	Results of Extraction Procedure Toxicity Tests of Catfish Pond Soil Samples	4-7
Table 4-2	Summary of Sample Screening Program	4-59
Table 4-3	Summary of Laboratory Analytical Program, Base-Wide	4-60
Table 4-4	Summary of Laboratory Analytical Program, Site 1	4-63
Table 4-5	Summary of Laboratory Analytical Program, Site 2	4-65
Table 4-6	Summary of Laboratory Analytical Program, Site 3	4-67
Table 4-7	Summary of Laboratory Analytical Program, Site 4	4-69
Table 4-8	Summary of Laboratory Analytical Program, Site 5	4-71
Table 4-9	Summary of Laboratory Analytical Program, Site 6	4-73
Table 4-10	Summary of Laboratory Analytical Program, Site 7	4-75

GLOSSARY OF ACRONYMS AND ABBREVIATIONS

ABB-ES	ABB Environmental Services
AOC	Area of Contamination
ARAR	Applicable or Relevant and Appropriate Requirement
ASCII	American Standard Code of International Interchange
ASTM	American Standard of Testing and Measurement
AWPCC	Air and Water Pollution Control Commission
AWQC	Ambient Water Quality Criteria
BCF	Biodoncentration Factor
BLS	below land surface
BOD	Biological Oxygen Demand
BW	body weight
CAA	Clean Air Act
CAS	Chemical Abstract Service
Cd	cadmium
CED	Construction Equipment Department
CERCLA	Comprehensive Environmental Response Compensation and Liability Act
CFR	Code of Federal Regulations
CLEAN	Comprehensive Long-term Environmental Action Navy
CLP	Contract Laboratory Program
CLP-RAS	Contract Laboratory Program-Routine Analytical Services
COD	Chemical Oxygen Demand
COE	Corps of Engineers
COPC	Contaminant of Potential Concern
CRP	Community Relations Plan
CRQL	Contract Required Quantitation Limit
CTO	Contract Task Order
CWA	Clean Water Act
DDT	dichlorodiphenyltrichloroethane
DOD	Department of Defense
DQO	data quality objective
ECD	electron capture detector
EIC	Engineer-in-Charge
EP	extraction procedure
EPA	Environmental Protection Agency
FEMA	Federal Emergency Management Agency
FFS	focused feasibility study
FICCDC	Federal Interagency Coordinating Committee for Digital Cartography
FIRMs	Floodplain Insurance Rate Maps
FS	feasibility study
FSP	field sampling plan
ft^2/day	Square Feet Per Day
FWS	Fish and Wildlife Science

GC	Gas Chromatograph
gpm	Gallons Per Minute
GPR	Ground Penetrating Radar
HASP	Health and Safety Plan
HEAST	Health Effects Assessment Summary Tables
HI	hazard indices
HLA	Harding Lawson Associates
HSM	Health and Safety Manager
HSO	Health and Safety Officer
HSS	Health and Safety Supervisor
HSWA	Hazardous and Solid Waste Amendments
IAS	Initial Assessment Study
ID	inside diameter
IDW	investigation derived waste
IR	Installation Restoration
IRIS	Integrated Risk Information System
LOEL	Lowest Observed Effect Levels
LOAEL	Lowest Observed Adverse Effect Levels
MCL	Maximum Contaminant Level
MCLG	Maximum Contaminant Level Goal
MDEQ	Mississippi Department of Environmental Quality
MEK	methyl ethyl ketone
μg/l	micrograms per liter
mg/kg	milligram per kilogram
mg/kg/bw/day	milligrams per kilogram body weight per day
mg/kg/day	milligrams per killograms per day
mg/l	milligram per liter
MS	mass spectrometry
MSL	Mean Sea Level
MSLD	Mean Sea Level Depth
MDWC	Mississippi Department of Wildlife and Conservation
NAAQS	National Ambient Air Quality Standards Program
NACIP	Naval Assessment and Control of Installation Pollutants
NBS	National Bureau of Standards
NCBC	Naval Construction Battalion Center
NCF	Naval Construction Force
NCP	National Contingency Plan
NCR	Naval Construction Regiment
NEESA	Naval Energy and Environmental Support Activity
NEPA	National Environmental Policy Act
NGVD	National Geodetic Vertical Datum of 1929
NHP	National Heritage Program
NMCB	Naval Mobile Construction Battalions
NOAA	National Oceanic and Atmospheric Administration
NPDES	National Pollutant Discharge Elimination System

OD	outer diameter
O&G	oil and grease
O&M	operation and maintenance
OSHA	Occupational Safety and Health Administration
OVA	organic vapor analyzer
%RPD	relative percent difference
%C	percent complete
%R	percent recovery
PARCC	Precision, Accuracy, Representativeness, Completeness, and Comparability
Pb	lead
PCB	polychlorinated biphenyls
PDE	potential dietary exposure
PID	photoionization detector
POTW	Public Owned Treatment Works
ppb	parts per billion
ppm	parts per million
PTFE	Polytetra fluoroethylene (Teflon)
PVC	polyvinyl chloride
QA	Quality Assurance
QAPP	Quality Assurance Project Plan
QC	Quality Control
QSAR	Quantitative Structure Activity Relationship
RAGS	Risk Assessment Guidance for Superfund
RCRA	Resource Conservation and Recovery Act
RD	Remedial Design
RfD	reference dose
RI	Remedial Investigation
RME	Reasonable Maximum Exposure
ROD	Record of Decision
RTV	Reference toxicity values
SAP	Sampling and Analysis Plan
SARA	Superfund Amendments and Reauthorization Act
SDWA	Safe Drinking Water Act
SF	slope factors
SFF	site foraging frequency
SOP	standard operating procedure
SOUTHNAVFAC ENGCOM	Southern Division, Naval Facilities Engineering Command
SQC	sediment quality criteria
SQL	Sample Quantitative Limit
SVOC	Semivolatile Organic Compound
TAL	Target Analyte List
TBC	to be considered
TBD	total body dose
TCL	Target Compound List

TCLP	Toxicity Characteristic Leaching Procedure
TDS	total dissolved solids
TOC	total organic carbon
TOM	Task Order Manager
TOX	total organic halogens
TPH	total petroleum hydrocarbons
TRC	Technical Review Committee
TSCA	Toxic Substances Control Act
TSS	total suspended solids
UCL	upper confidence limit
USCS	Unified Soil Classification System
USEPA	U.S. Environmental Protection Agency
USGS	United States Geologic Survey
VOA	volatile organic analytes
VOC	volatile organic compound
VLF	very low frequency
WWII	World War II

SECTION 1

1.0 INTRODUCTION

1.1 PURPOSE AND REGULATORY SETTING. In accordance with the Comprehensive Environmental Response, Compensation, and Liability Act (CERCLA) of 1980, amended by the 1986 Superfund Amendments and Reauthorization Act (SARA), and as directed in Executive Order 12580 of January 1987, the Department of Defense (DOD) conducts an Installation Restoration (IR) program for evaluating and remediating problems related to releases and disposal of toxic and hazardous materials at DOD facilities. The Naval Assessment and Control of Installation Pollutants (NACIP) program was developed by the Navy to implement the IR program for all Naval and Marine Corp facilities. The NACIP program was originally conducted in three phases: (1) Phase I, Initial Assessment Study, (2) Phase II, Confirmation Study (including a Verification Step and a Characterization Step), and (3) Phase III, Planning and Implementation of Remedial Measures. The three-phase IR program was modified in 1987-88 to be congruent with CERCLA and SARA. The updated nomenclature for the Remedial Investigation/Feasibility Study (RI/FS) process is as follows:

- Preliminary Assessment and Site Inspection,
- Remedial Investigation,
- Feasibility Study, and
- Planning and Implementation of Remedial Design.

In addition to these programs, military installations are subject to regulations promulgated by the 1976 Resource Conservation and Recovery Act (RCRA) and the 1984 Hazardous and Solid Wastes Amendments. Southern Division, Naval Facilities Engineering Command (SOUTHNAVFACENGCOM) has the responsibility for enforcement of the Navy IR program in the southeastern United States.

Naval Construction Battalion Center (NCBC) Gulfport, or Activity, is located in the western part of Gulfport, Harrison County, Mississippi (Figure 1-1). As a component of the IR program, two previous investigations were performed to assess and characterize potential sources of contamination at NCBC Gulfport. These investigations included the 1985 Initial Assessment Study (IAS) and the 1987 Verification Study.

The conclusions of these previous investigations indicate a need for additional characterization at seven sites at NCBC Gulfport. Data were insufficient to characterize the extent of contamination, assess releases, and develop responses. As a result, ABB Environmental Services, Inc. (ABB-ES) was contracted under the Comprehensive Long-term Environmental Action, Navy (CLEAN) contract (contract number N62467-89-D-0317, Contract Task Order Number 17) to prepare an RI/FS Workplan for the seven sites at NCBC.

The objective of the RI is to collect sufficient data to adequately characterize and quantify the extent of contamination, if any, for the purposes of performing a Baseline Risk Assessment, supporting an FS, and selecting a remedial action.

The FS is designed to develop remedial alternatives, conduct treatability studies if necessary, and propose remedial actions. Remedial actions are performed to mitigate threats to human health and the environment by removing, containing, or treating contaminated matrices to established target levels.

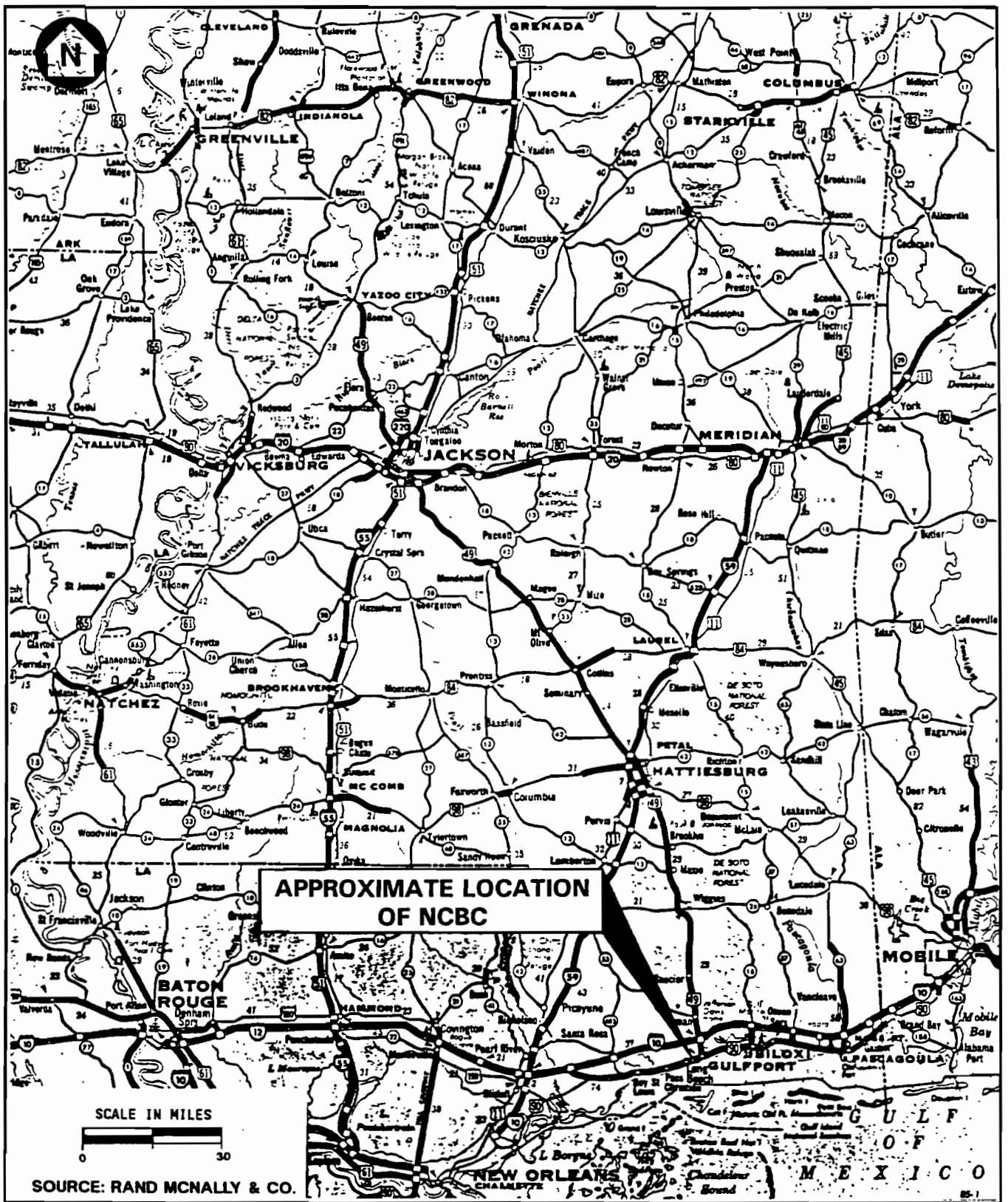

FIGURE 1-1
NCBC GULFPORT, MS LOCATION

RI/FS WORK PLAN

NAVAL CONSTRUCTION
BATTALION CENTER
GULFPORT, MISSISSIPPI

7528-30

1.2 POTENTIAL SOURCES OF CONTAMINATION. Six sites were identified as potential sources of contamination and recommended for verification study during the IAS performed by Envirodyne Engineers, Inc. A verification study was performed by Harding Lawson Associates (HLA) on these six sites and one additional site recommended by HLA. The sites included are as follows:

Site 1, Disaster Recovery Disposal Area;
Site 2, World War II (WW II) Landfill;
Site 3, Northwest Landfill and Burn Pit;
Site 4, Golf Course Landfill;
Site 5, Heavy Equipment Training Area Landfill;
Site 6, Fire-Fighting Training Area; and
Site 7, Rubble Disposal Area.

Site 7 was recommended for investigation by HLA due to its proximity to Site 2 and ease of integration into the verification study. All seven sites will be included in the RI/FS activities.

1.3 OVERVIEW OF PLANNING DOCUMENTS (VOLUMES I THROUGH III). The planning documents to support the RI/FS program consist of three volumes:

Volume I, Workplan;

Volume II, Sampling Analysis Plan (SAP) [incorporates both the Field Sampling Plan (FSP) and Quality Assurance Project Plan (QAPP)]; and

Volume III, Health and Safety Plan (HASP).

Together the three volumes present the scope of the RI/FS program. The workplan (Volume I) provides a record of site history, describes regional environmental factors, details previous investigative results, describes RI/FS tasks, and describes site-specific investigative methodology and project organization and schedule.

The SAP (Volume II) consists of the FSP and the QAPP and focuses on the field investigations, analytical methods, and quality assurance/quality control (QA/QC) procedures. The FSP provides a project description, describes site management and field methods, and details the technical approach and sampling plans for each site. The QAPP describes QA/QC requirements for sample collection, sample analysis, data assessment, corrective action, and reporting.

Volume III, the HASP, outlines health and safety procedures for field tasks. The HASP includes material safety data sheets for chemicals that may be encountered at the site and provides emergency information and telephone numbers.

The Community Relations Plan (CRP) provides the guidelines for future community relations activities at the site. The CRP provides a site mailing list, an accessible location for all public information about the site, an opportunity for a public meeting and comment upon issuance of the RI/FS workplan and report, and methods of keeping the community informed. The CRP is developed in conjunction with the Draft Final submittal of the planning documents.

The format and scope of Volumes I through III of the RI/FS planning documents have been prepared in compliance with the 1988 RI/FS guidance under Superfund and the Navy IR Program Manual of 1988.

SECTION 2

2.0 FACILITY BACKGROUND

2.1 SITE LOCATION AND LAND USE. NCBC Gulfport is located in the city of Gulfport, Harrison County, in the southeastern corner of the State of Mississippi (Figure 1-1). The Activity occupies 1,100 acres in the western part of Gulfport, immediately south of 28th Street (Figure 2-1). Biloxi, the county's largest city, is located approximately 7 miles to the east of Gulfport, and Pass Christian is located 7 miles to the west. The City of Long Beach borders the western NCBC property line.

The NCBC property land use and land cover classifications include residential; commercial and services; industrial; transportation, communications, and utilities; industrial complexes (warehouses and associated storage areas); mixed forest land; and wetlands (forested and nonforested).

2.1.1 Site Operations The primary purpose of NCBC Gulfport is the support of four battalions of the Naval Construction Force (NCF) and the storage and maintenance of Pre-positioned War Reserve Material Stock. NCF support consists of both homeport services and deployed support. Additional missions entail tenant support and services to other activities in the region (Envirodyne, 1985). Approximately 4,000 military and ~~1,600~~ 800 civilian personnel are assigned to or employed by the Activity.

2.1.2 Adjacent Land Use The land surrounding the NCBC property is predominantly residential (Figure 2-2). Some wooded areas consisting of open pine forest and deciduous hardwoods associated with Turkey Creek are located northwest of NCBC. Low density housing areas are scattered throughout.

Mississippi Sound is approximately 1.1 miles south of the Activity (Envirodyne, 1985).

Gulfport-Biloxi Regional Airport, located approximately 2 miles northeast of the Activity, is used for daily commercial jet flights and as a National Guard training center. The only State-owned ocean port is located approximately 2 miles southeast of NCBC Gulfport and is used by numerous ocean-going freighters. Ships with drafts greater than 30 feet can use the port (Envirodyne, 1985).

A former sanitary landfill is located on the east side of Canal road, approximately 0.8 mile north of the NCBC property line. The landfill was used sporadically since 1969 primarily for the disposal of rubble, and in 1980, debris from Hurricane Fredric was disposed there. Currently, municipal wastes from the City of Gulfport and Harrison County are taken to a landfill in Jackson County for disposal (Envirodyne, 1985).

2.2 SITE HISTORY. NCBC Gulfport, originally named Camp Hollyday, was established on 2 June 1942 as an Advanced Base Depot. Between 1942 and 1944, an Armed Guard School and Cooks and Bakers School were added and millions of tons of supplies and equipment were stored at the camp and shipped to all areas for military operations. In 1944, NCBC became a U.S. Naval Training Center, which eventually resulted in a single command of the Naval Training Center and the Advanced Base Depot (Envirodyne, 1985).

THIS PAGE LEFT INTENTIONALLY BLANK.

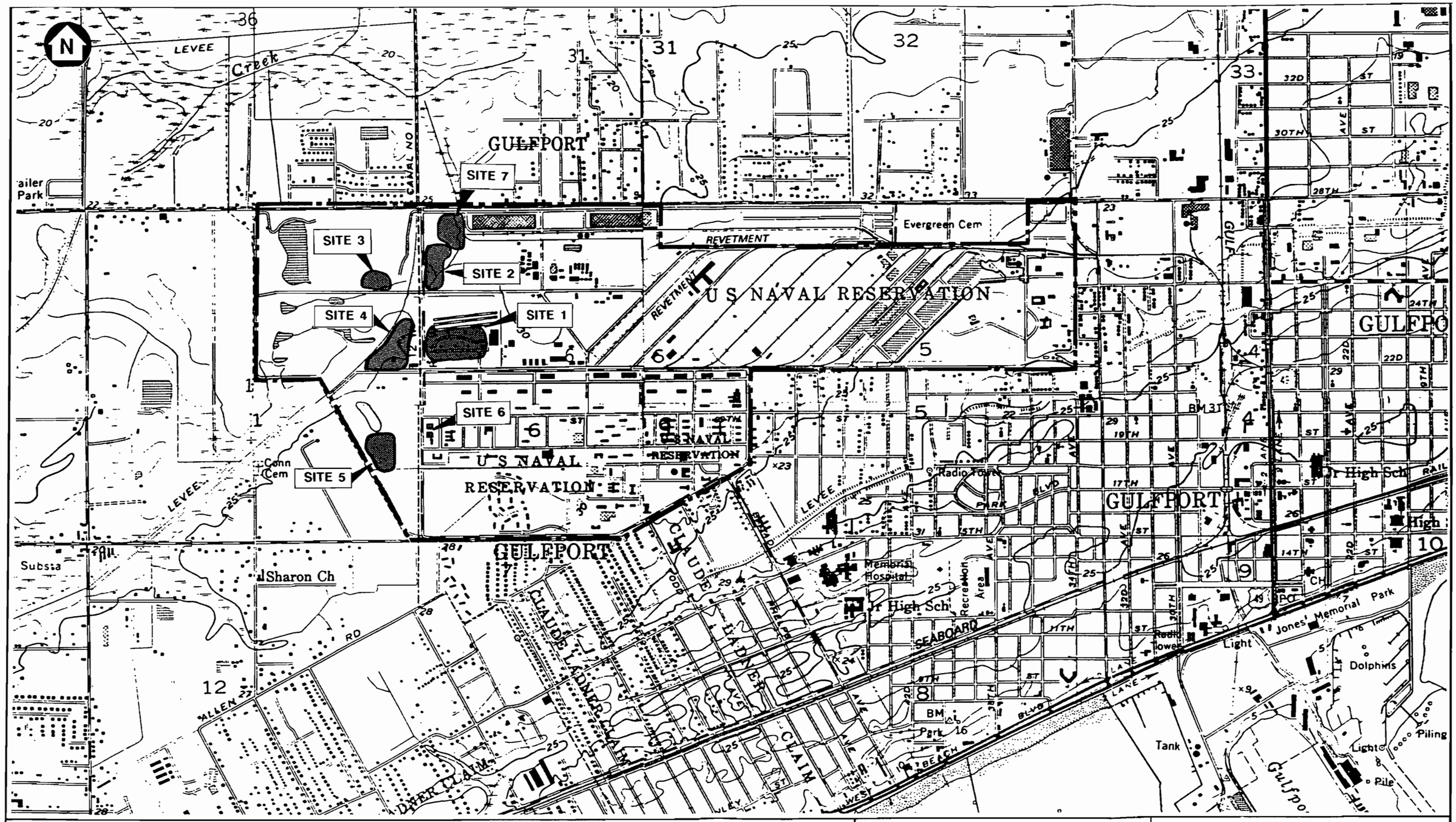

SCALE IN FEET

0 500 1000 2000

SOURCE: USGS QUADRANGLE GULFPORT NW, MISS 1985.

APPROXIMATE SITE AREA

BASE BOUNDARY

MISS

QUADRANGLE LOCATION

FIGURE 2-1
NCBC LAYOUT AND SITE LOCATION

RI/FS WORK PLAN

NAVAL CONSTRUCTION BATTALION CENTER GULFPORT, MISSISSIPPI

7528-30

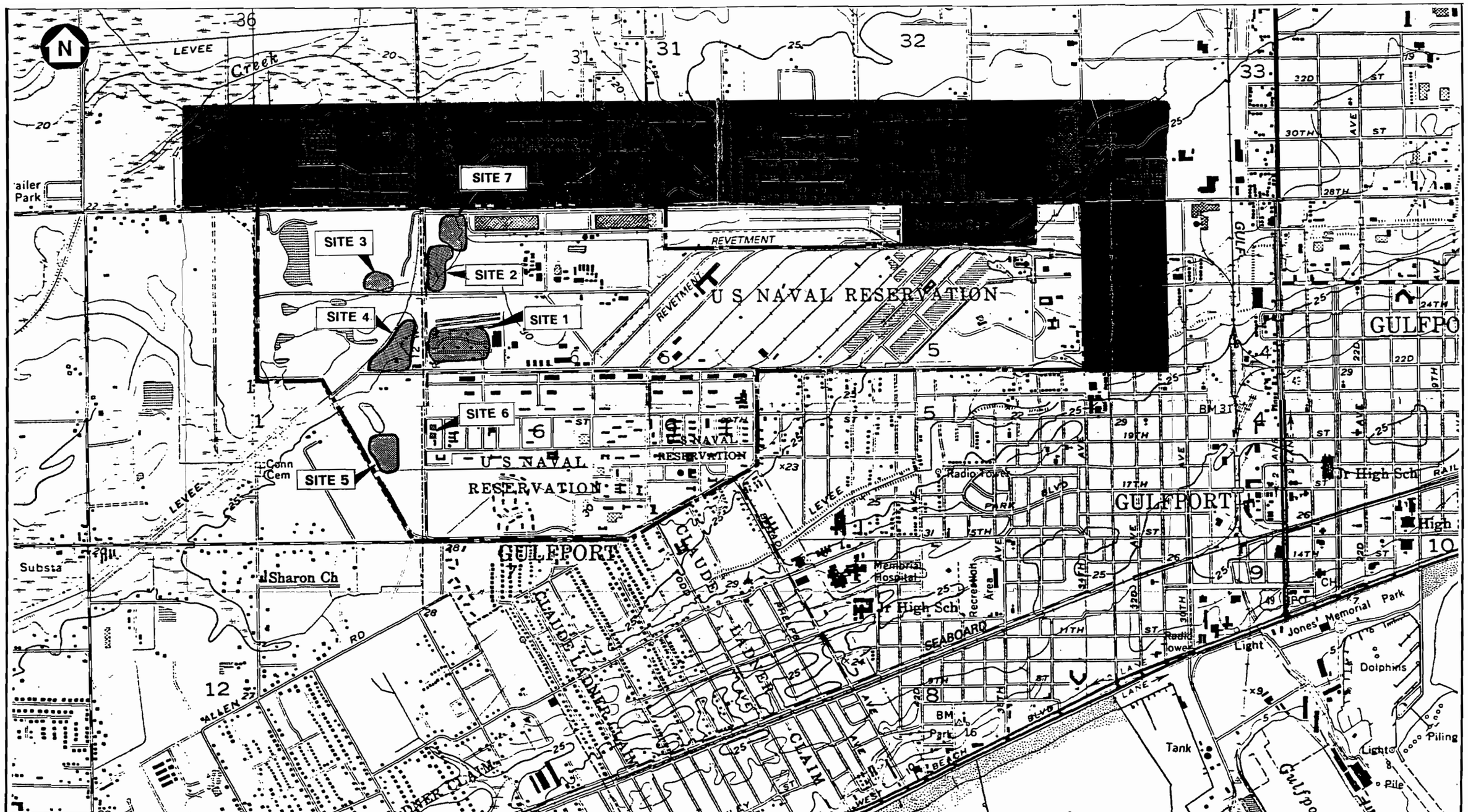

FIGURE 2-2

ADJACENT LAND USE MAP

SOURCE: GULFPORT, MS PLANNING BOARD, 1991

RI/FS WORK PLAN

NAVAL CONSTRUCTION BATTALION CENTER
GULFPORT, MISSISSIPPI

7528-30

Between 1945 and 1952, the activity was operated as the U.S. Naval Storehouse. The training center was decommissioned in 1946. On 26 February 1952 the Naval Storehouse was replaced by the Advanced Base Supply Depot, Naval Construction Equipment Depot, and an NCBC. In July 1953, NCBC Gulfport was established by incorporating the two depots (Envirodyne, 1985).

In 1966, the activity expanded to include homebase battalion support functions and, after 20 inactive years, NCBC Gulfport was forming, staging, training, and homeporting two Naval Mobile Construction Battalions (NMCB). Presently, four construction battalions (NMCBs 1, 7, 74, and 133), under command of the 20th Naval Construction Regiment (NCR) are based at Gulfport. These four "Seabee" battalions average approximately 650 personnel each and are deployed on a rotational schedule (Envirodyne, 1985).

Many new buildings of permanent masonry have been constructed due to damage caused by Hurricane Camille in 1969. In 1974, both the Naval Construction Training Center, now the largest tenant, and the Commander, Construction Battalions Atlantic Fleet, Detachment Gulfport, were established at NCBC (Envirodyne, 1985).

2.3 ENVIRONMENTAL DESCRIPTION.

2.3.1 Climatology The humid, moderate-to-subtropical climate in the vicinity of the NCBC facility is influenced by the Gulf of Mexico, the huge land mass to the north, and its subtropical latitude. Average temperatures in Gulfport range from 51.6 degrees Fahrenheit (°F) in January to 82.2 °F in July, with a mean annual temperature of 67.9 °F for the years 1951 to 1980. Temperature extremes include an average daily maximum of 91.2 °F in August and an average daily minimum of 42.2 °F in January (National Oceanic and Atmospheric Administration [NOAA], 1985).

The average annual precipitation for Gulfport is 62.85 inches for the years 1951 to 1980. The months during which the greatest average rainfall is received (1951 to 1980) are May (17.63 inches), July (17.54 inches), and September (21.83 inches). The driest months are October and November, with an average rainfall of 2.98 and 3.81 inches, respectively. On average, rainfall greater than 0.10 inch is received 74 days per year (NOAA, 1985).

Snow is rare in the Gulfport area. Between 1951 and 1980 for example, only two measurable snowfall events occurred. A 7.0-inch event occurred in December 1963 and a 2.5-inch event occurred in February 1973 (NOAA, 1985).

Evapotranspiration rates are highest in the months of May through October. Average annual pan evaporation along the Mississippi coastline is approximately 48 inches. The prevailing winds are variable throughout the year. The prevailing wind direction is from the south during the spring and early summer, from the east during the late summer, and from the north the remainder of the year. In general, wind speeds are less than 10 miles per hour (Envirodyne, 1985).

Periodically, tropical storms will pass through Gulfport causing wind and flood damage. These usually occur from June to November. One of the most significant hurricanes, Hurricane Camille, passed through Gulfport in 1969. Camille had a 23-foot tidal surge (Envirodyne, 1985).

2.3.2 Topography, Surface Water, and Drainage

2.3.2.1 Topography Harrison County is located in the Coastal Pine Meadows Region and the Longleaf Pine Hills Region, which are two physiographic regions of the East Gulf Coastal Plain. The NCBC facility is situated within the Coastal Pine Meadows Region that extends from the shoreline 15 to 20 miles inland and is basically flat with a slight upward sloping to the north. The Longleaf Pine Hills Region begins at the northern boundary of the Coastal Pine Meadows Region and is an undulating area of rolling hills. Elevation differences in this area may vary as much as 150 feet between stream-beds and ridge tops (Mississippi Air and Water Pollution Control Commission [AWPCC], 1978; Envirodyne, 1985).

Most of Harrison County is gently rolling terrain with elevations ranging from sea level on the coast to 230 feet above sea level in the north-central part of the county (Newcome et al, 1968). At NCBC, elevations range from 20 to 35 feet above sea level with an average elevation of approximately 23 feet above sea level. There is little topographic relief at the Activity except near the bauxite storage piles, which are approximately 70 feet above sea level (SOUTHNAVFACENGCOM, 1984; Envirodyne, 1985).

2.3.2.2 Surface Water and Drainage Harrison County is located within the Coastal Streams Basin, which encompasses approximately 1,560 square miles. This basin is bounded on the west by the Pearl River Basin, on the north and east by the Pascagoula River Basin, and on the south by the Gulf of Mexico (AWPCC, 1978).

Three major stream systems drain Harrison County (Newcome et al, 1968). These streams originate outside the county and flow generally southeastward through the county to bays that open into Mississippi Sound. The western section of the county drains into the Wolf River, the largest of the streams in the area. The Biloxi and Tchoutacabouffa Rivers drain the central and eastern sections of the county, respectively. Several smaller streams drain parts of the county near the coastal area.

NCBC Gulfport is primarily located in the Bernard Bayou watershed which is tributary to Biloxi Bay. Surface runoff from the Activity is collected by a system of shallow grassed ditches that predominantly drain into Canal No. 1 (Figure 2-3). On NCBC property, Canal No. 1 discharges north into Turkey Creek which drains eastward to Bernard Bayou and Biloxi Bay. The eastern part of the Activity discharges to Brickyard Bayou, which drains to Bernard Bayou. Some runoff from the southern part of the facility discharges into the City of Gulfport sewer system (Envirodyne, 1985).

2.3.3 Regional Geology and Soils

2.3.3.1 Geology NCBC is located in the Late Tertiary Gulf Coast Geosyncline, which begins approximately 100 miles into the Gulf of Mexico. The geosyncline's major axis roughly parallels the Louisiana coastline. River and stream sediments flowing into the Gulf of Mexico during the past 15 million years have filled in the trough produced by the geosyncline (Envirodyne, 1985). Three broad divisions of landforms exist along the Gulf Coastal Plains. These consist of the Longleaf Pine Hills, the Coastal Pine Meadows, and the alluvial plains of the larger streams (Brown et al, 1944). Gulfport is situated within the Coastal Pine Meadows, which include the Pamlico plain and recent beach and eolian deposits.

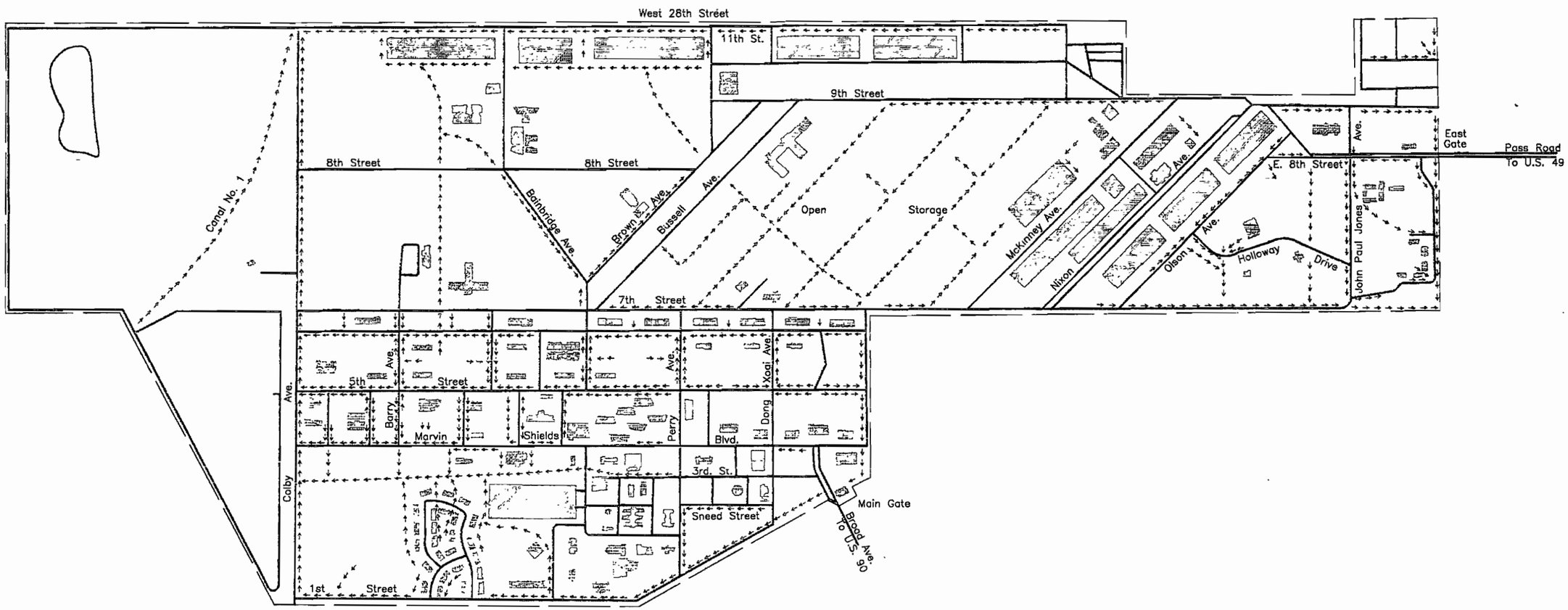

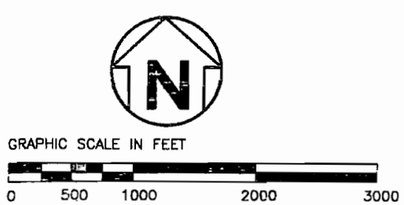

Ditch System

FIGURE 2-3
NCBC SURFACE WATER
DRAINAGE SYSTEM

RI/FS WORKPLAN

NAVAL CONSTRUCTION
BATTALION CENTER
GULFPORT, MISSISSIPPI

The Pamlico plain is relatively flat or gently undulating and locally swampy (HLA, 1987).

The region's uppermost stratigraphic units are comprised of alluvium from the Pleistocene and Recent Series and Pamlico Sand, Low and High Terrace Deposits, and Citronelle Formation from the Pleistocene Series (HLA, 1987). According to Sumner et al (1989), Pleistocene and Holocene units lie unconformably above the Pliocene and Miocene sediments and are described as undifferentiated alluvium and terrace deposits that form the uppermost surficial aquifer. These units are underlain by the Graham Ferry Formation of the Pliocene and Pleistocene Series and the Pascagoula Formation, Hattiesburg Formation, and Catahoula Sandstone of the Miocene series. More recent research assigns the Citronelle and Graham Ferry Formations to the Pliocene Series (Sumner et al, 1989). Table 2-1 summarizes descriptions and hydrologic properties of these formations. Figure 2-4 is a geologic map of Harrison County and adjacent areas.

At NCBC, drilling operations conducted during the Verification Study encountered unconsolidated sediments, mostly consisting of sands and silty sands. All borings conducted during the Verification Study encountered a clay layer, which ranged from 13 to 30 feet below land surface (BLS). The boring logs presented in the Verification Study report are included herein as Appendix A. These logs were used to develop geologic cross sections (Figures 2-5 and 2-6) and a fence diagram (Figure 2-7) showing subsurface stratigraphy at the activity. Figure 2-8, a plan view of the sites, shows the location of lines of cross section presented in Figures 2-5, 2-6, and 2-7.

2.3.3.2 **Soils** This section describes soil types present at NCBC based on information presented in the soil survey of Harrison County, Mississippi (Soil Conservation Service, 1975). NCBC is underlain by four soil units that include the Atmore, Harleston, Ocilla, and Plummer Series. The western part of NCBC is predominantly underlain by the Plummer Series whereas the eastern part is primarily underlain by the Ocilla Series (Figure 2-9). Each of these series has a low shrink-swell potential and a slight erosion hazard.

The Atmore Series consists of silty loam, loam, clay, and clayey loam. Its available water capacity ranges from 0.10 to 0.24 inch per inch of soil depth. Soil permeabilities vary from 0.20 to 2.00 inches per hour. The water table is at or near the ground surface during winter and spring.

The Harleston Series comprises fine sandy loam and sandy clay loam. Its available water capacity ranges from 0.10 to 0.15 inch per inch of soil depth. Soil permeabilities range from 0.63 to 2.00 inches per hour. The depth of seasonal high water table varies from zero to 15 inches.

The Plummer Series includes loamy sand and sandy loam. The available water capacity of these soils range from 0.05 to 0.15 inch per inch of soil depth. The series has permeabilities that range from 0.63 to 20.00 inches per hour. The depth to seasonal high water table varies from zero to 15 inches.

2.3.4 Wetlands In April 1990, the U.S. Army Corps of Engineers (COE) was requested to determine if wetlands falling under the jurisdiction of the COE were located on eight parcels of property proposed for development at NCBC Gulfport. Wetland areas were delineated in the areas shown in Figure 2-10. The COE used

Table 2-1 Geologic Formations in the Gulfport, Mississippi, Area[1], RI/FS Workplan NCBC Gulfport Gulfport, Mississippi

Series	Stratigraphic Unit	Thickness (feet)	Description	Hydrologic Properties
Pleistocene and Recent	Alluvium	0-35+	Chert and quartz gravels, sands, into sandy clays and silts. Localized accumulations of organic debris.	Contains large undeveloped groundwater supplies with uniform temperature through year.
Pleistocene	Pamlico Sand	0-75	Unconsolidated gray and tan sand with pebbles of quartz and chert.	Contains much water in beach areas under unconfined conditions and in contact with saltwater.
	Low Terrace Deposits	0-20	Sand from beach deposits with pebbles of quartz and chert.	Insufficient thickness and aerial extent to yield other than small shallow domestic or stock water wells.
	High Terrace Deposits	0-1000	Sand and gravel with pebbles of chert and quartz.	Small farm supplies derived; however, only the lower few feet are generally saturated.
	Citronelle Formation	0-160	Sand and gravelly sand with lenses and layers of clay and clayey gravel.	Numerous small farm supplies derived from a few feet of the basal sand and gravel.
Pliocene and Pleistocene	Graham Ferry Formation	113-975	Silty clay and shale, sand, silty sand, gravelly sand and gravel.	Most intensively developed formation, containing water under confined conditions throughout the area.
Miocene	Pascagoula Formation	800-1300	Blue-green clay and shale, silt, sandy shale, sand, silty clay, and gravel. Abundant black chert.	Significant quantities of water produced under confined conditions with some saltwater intrusion observed.
	Hattiesburg Formation	350-1500	Gray-green and blue green shale and clay, gray sand and silt.	Undeveloped freshwater supplies in the northern part of the area. The remainder of the formation contains brackish or saltwater.
	Catahoula Sandstone	300-560	Shale, sandy shale, sand, clay, silt, and gravelly sands.	The uppermost part contains freshwater and is generally undeveloped in the coastal areas.

[1]Source: Harding Lawson and Associates, 1987.

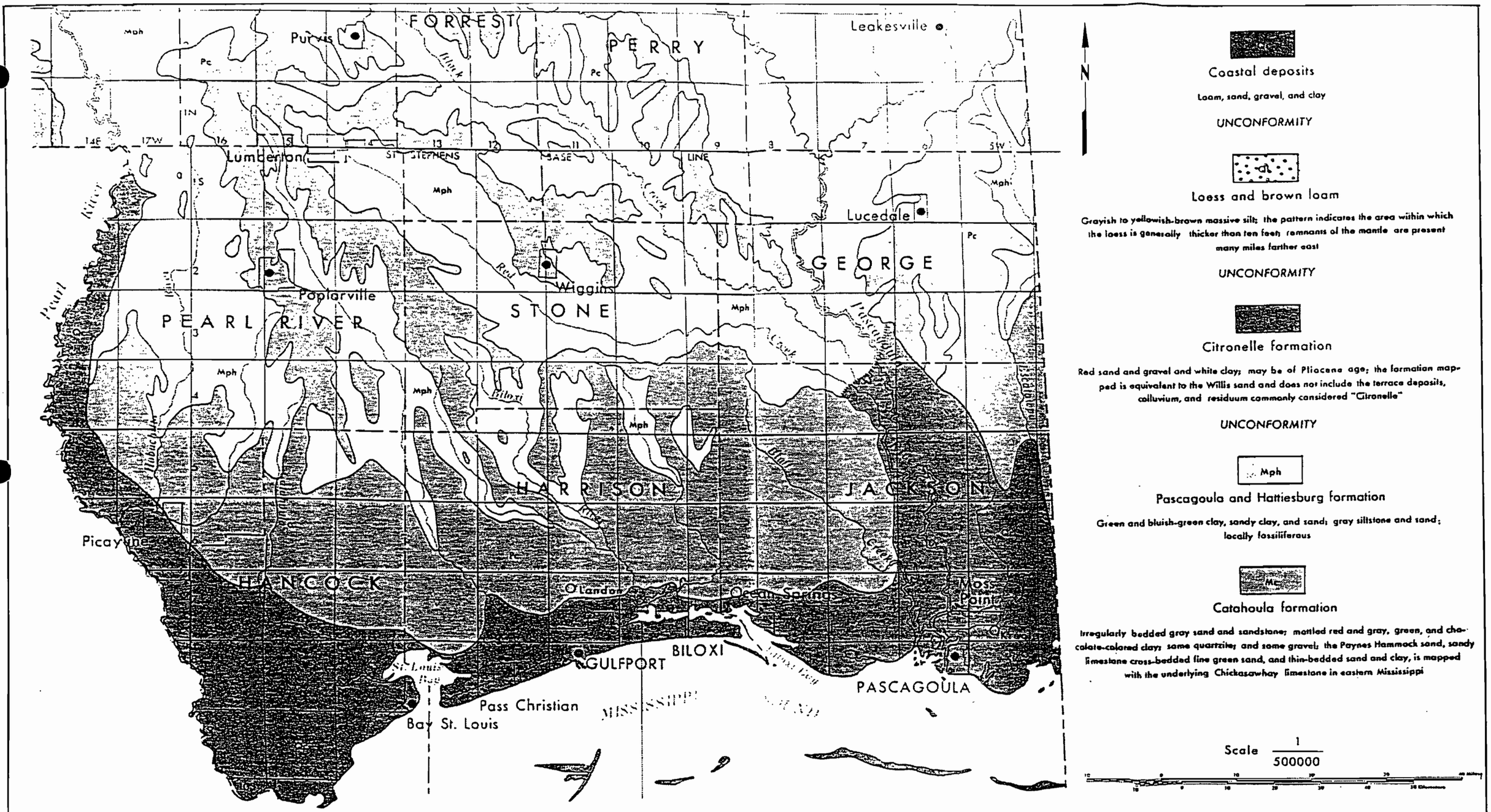

MISSISSIPPI GEOLOGICAL SURVEY
1969
REPRINTED 1985

FIGURE 2-4

GEOLOGIC MAP

RI/FS WORK PLAN

NAVAL CONSTRUCTION
BATTALION CENTER
GULFPORT, MISSISSIPPI

7528-30

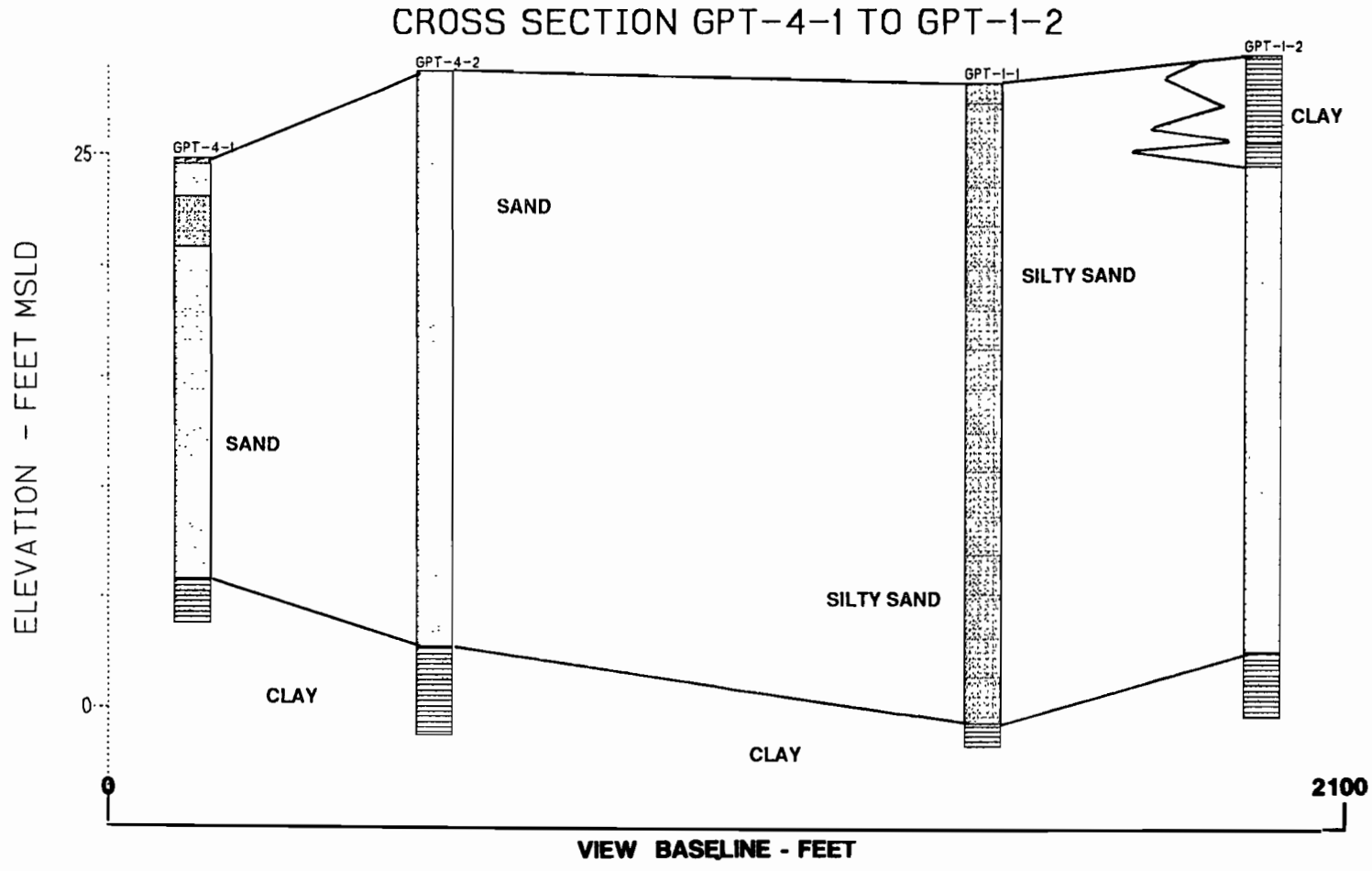

FIGURE 2-5

CROSS SECTION GPT-4-1 TO GPT-1-2

RI/FS WORKPLAN

NAVAL CONSTRUCTION BATTALION CENTER GULFPORT, MISSISSIPPI

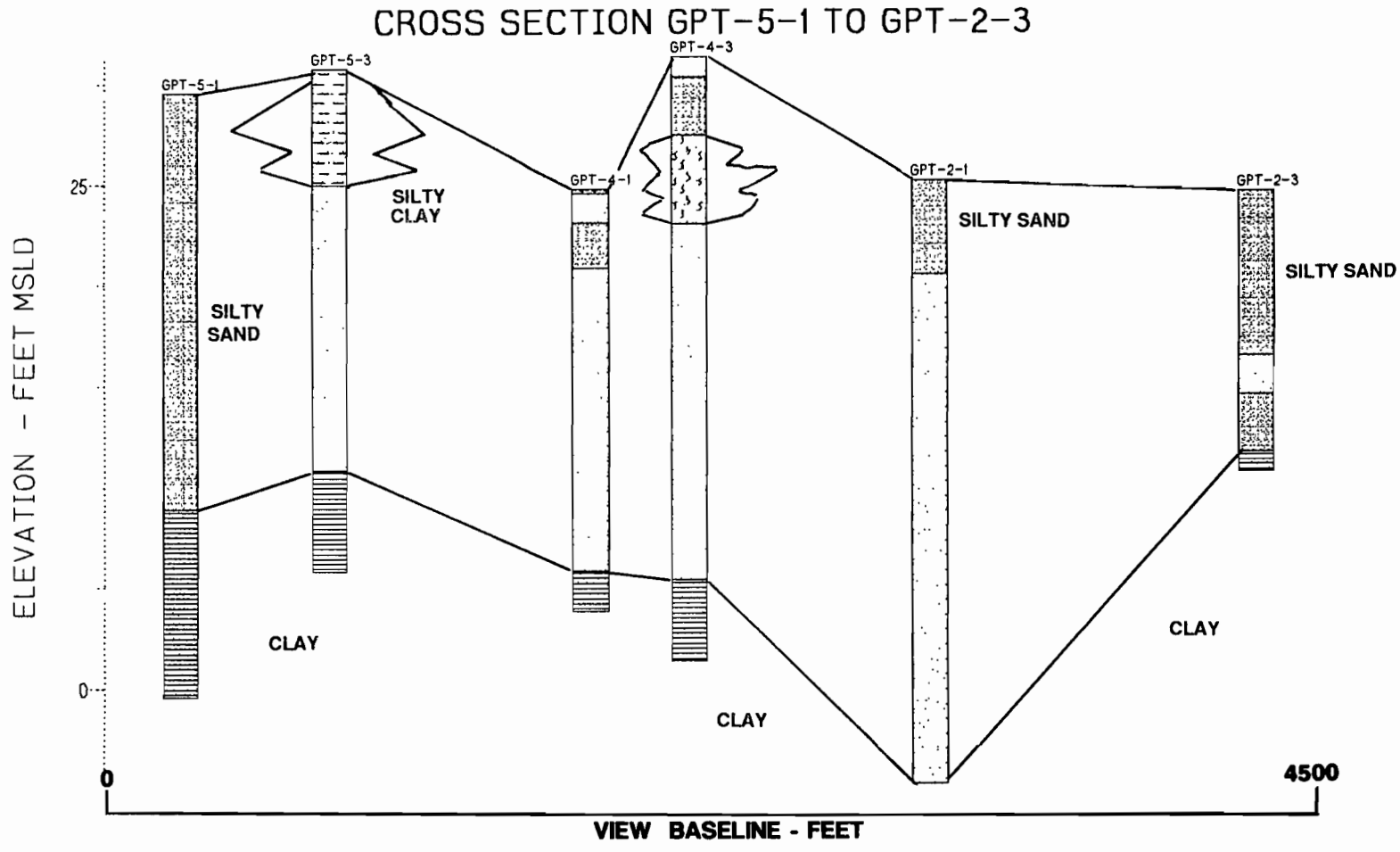

FIGURE 2-6

CROSS SECTION GPT-5-1 TO GPT-2-3

RI/FS WORKPLAN

NAVAL CONSTRUCTION BATTALION CENTER GULFPORT, MISSISSIPPI

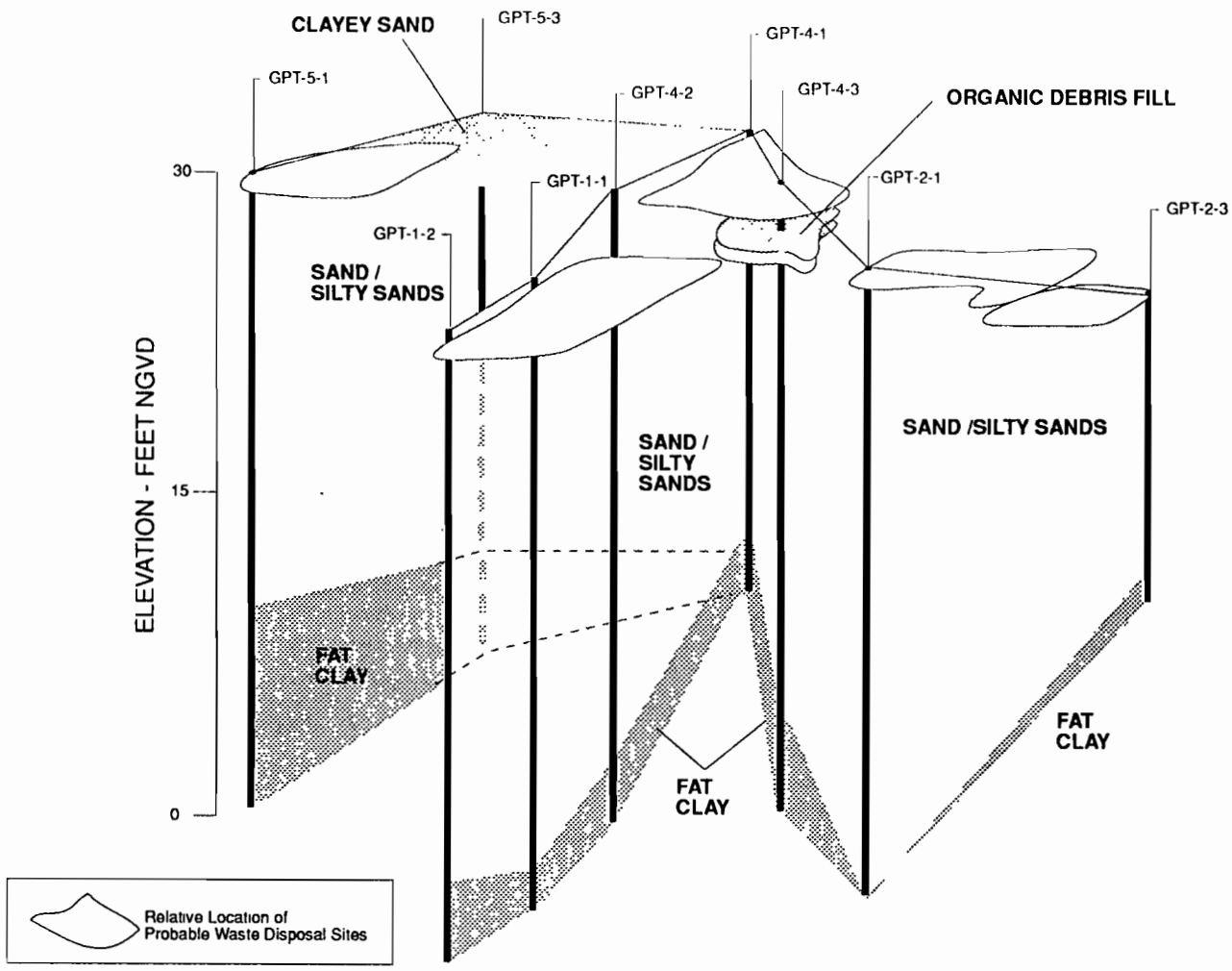

FIGURE 2-7

FENCE DIAGRAM ACROSS SITE

RI/FS WORKPLAN

NAVAL CONSTRUCTION BATTALION CENTER GULFPORT, MISSISSIPPI

THIS PAGE LEFT INTENTIONALLY BLANK.

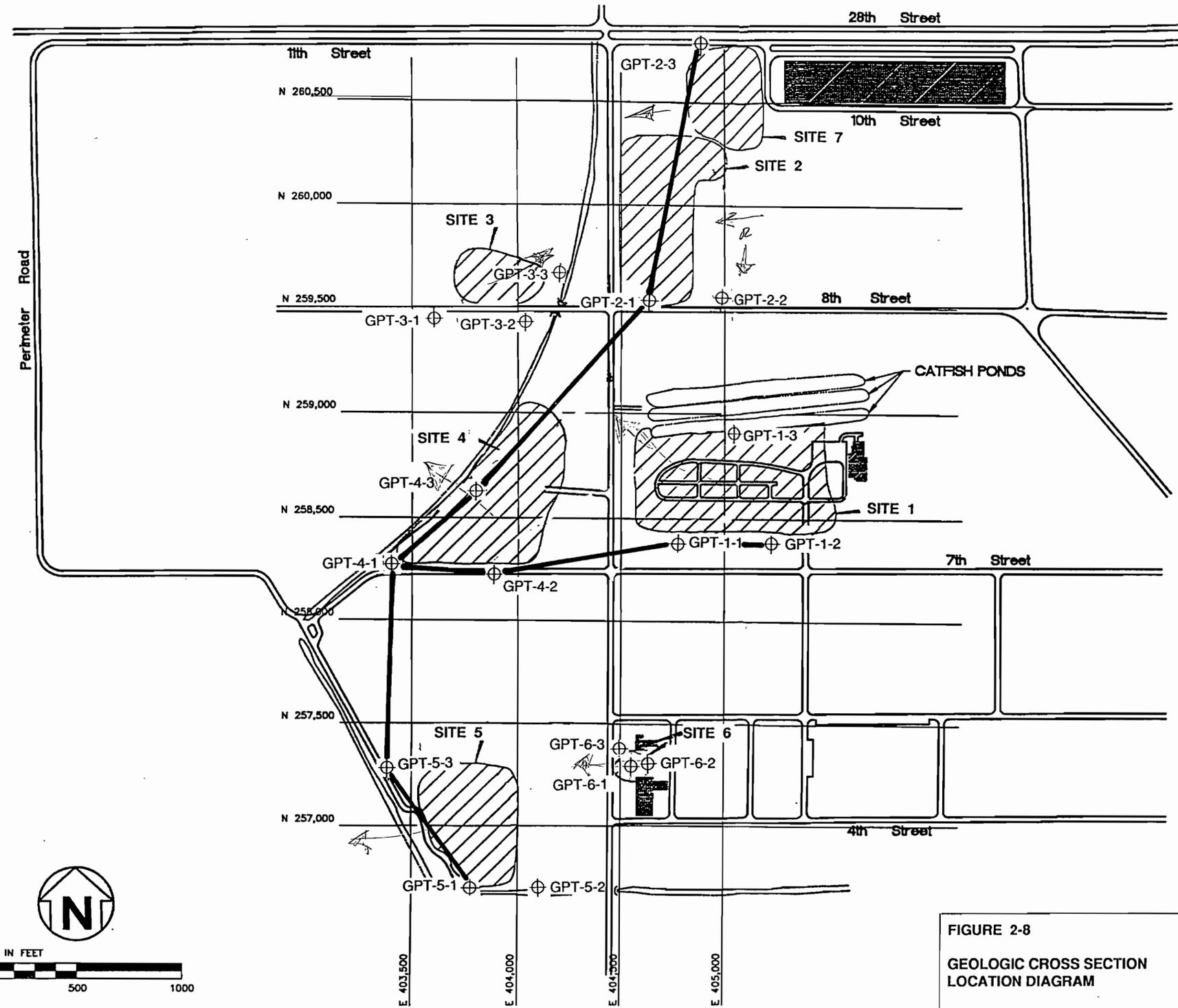

Source: HLA, 1987

GPT-6-3 ⊕	Groundwater Monitoring Well Number and Location
	Probable Waste Disposal Sites
N 260,500 / E 403,500	MISSISSIPPI STATE PLANE COORDINATES (See Appendix C for exact monitoring well locations)

FIGURE 2-8

GEOLOGIC CROSS SECTION LOCATION DIAGRAM

RI/FS WORKPLAN

NAVAL CONSTRUCTION BATTALION CENTER GULFPORT, MISSISSIPPI

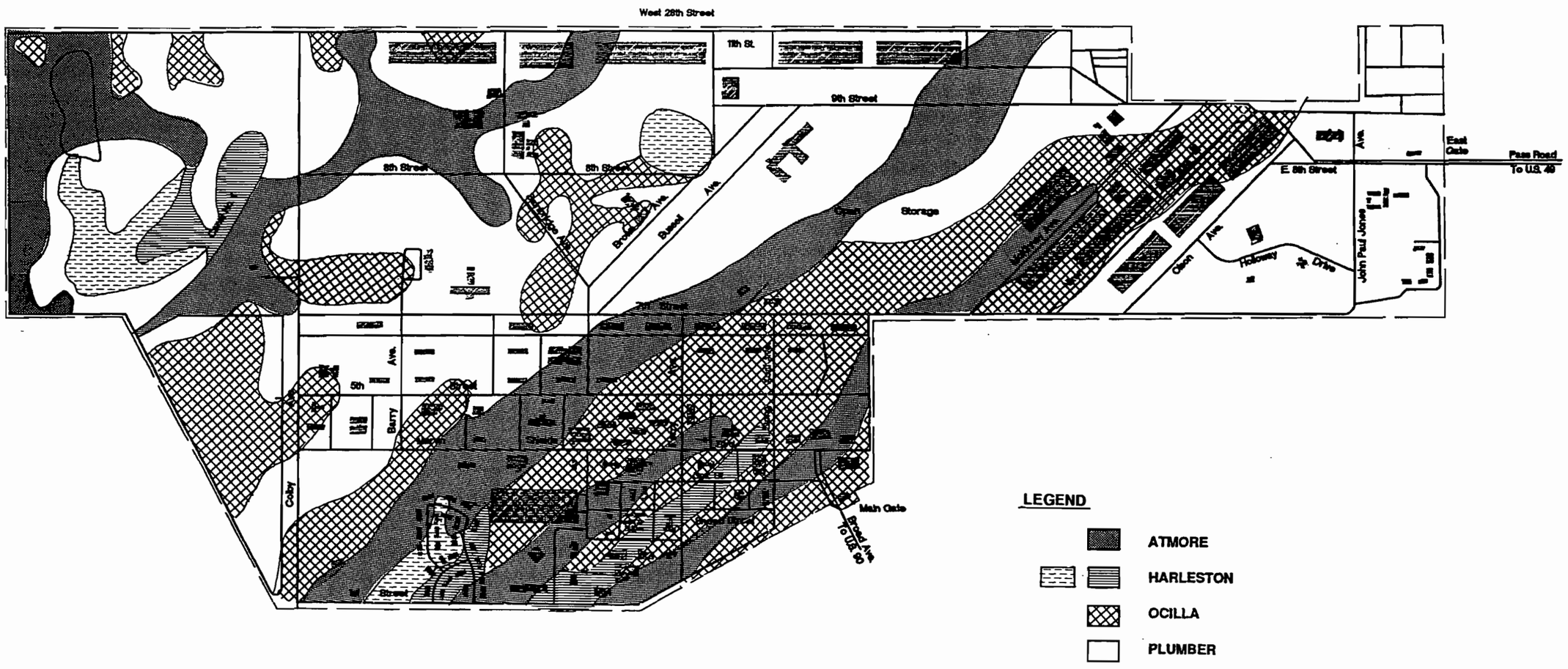

GRAPHIC SCALE IN FEET

0 500 1000 2000 3000

FIGURE 2-9
NCBC GENERAL SOILS MAP

RI/FS WORKPLAN

NAVAL CONSTRUCTION BATTALION CENTER
GULFPORT, MISSISSIPPI

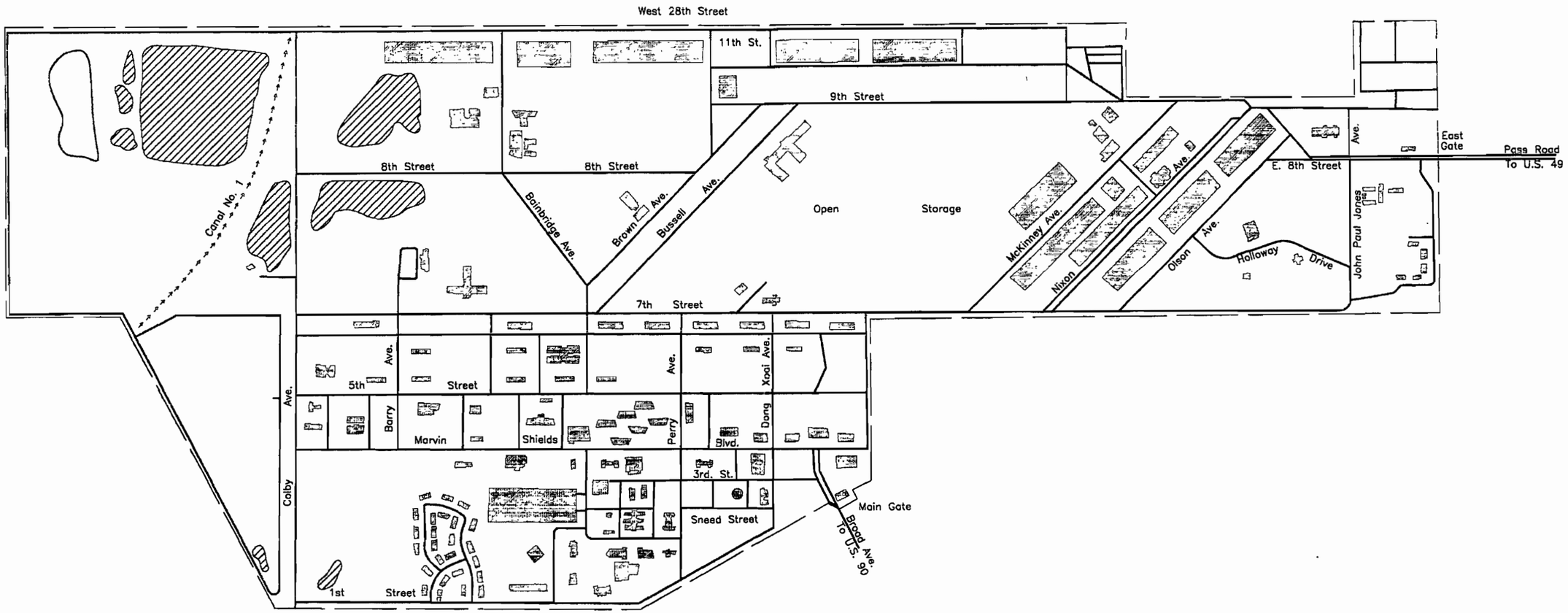

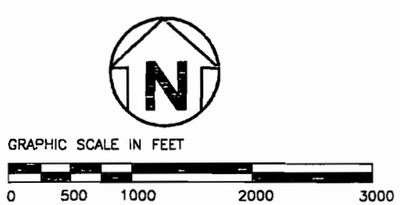

Wetland Boundary

Canal Location and Flow Direction

FIGURE 2-10
NCBC WETLANDS MAP

RI/FS WORKPLAN

NAVAL CONSTRUCTION BATTALION CENTER
GULFPORT, MISSISSIPPI

the multi-parameter method referenced in the *New Federal Wetland Delineation Manual* to delineate the wetlands (USACOE, 1989). The three parameters used in this method included hydric soils, hydrophytic vegetation, and hydrology.

2.3.5 Regional Hydrogeology Based on information presented in the Initial Assessment Study (Envirodyne, 1985) the groundwater sources in southern Mississippi consists of a sand and gravel surficial aquifer overlying the Citronelle Formation and Miocene aquifer system. Potable water in this region is obtained from the latter two aquifer systems, which are confined in the southernmost areas of Mississippi. The Citronelle Formation and the Miocene aquifer systems are vaguely defined; therefore, the first artesian aquifer underlying younger deposits of the surficial aquifer is considered to be a part of the Citronelle Formation and the deeper underlying aquifers are of the Miocene aquifer system. The following subsections describe the characteristics of aquifers present in the Gulfport, Mississippi, area based on information presented in the IAS (Envirodyne, 1985) and other sources as indicated.

2.3.5.1 Surficial Aquifer In Gulfport, the surficial aquifer consists of Pamlico sand and Recent deposits with thicknesses of up to 100 feet (Brown et al, 1944). The water in this unconfined aquifer is generally of poor quality. Based on well logs from NCBC, the surficial aquifer at the Activity comprises sands and gravel ranging from 13 to 45 feet in thickness underlain by a clay layer ranging from 28 to 197 feet in thickness. At NCBC, groundwater flow in the surficial aquifer is from topographic highs to areas of discharge such as nearby drainage ditches or canals. Regional groundwater flows southward to Mississippi Sound (Envirodyne, 1985).

2.3.5.2 Citronelle Formation The Citronelle Formation is composed mostly of quartz sand, chert gravel, and lenses and layers of clay ranging 0 zero to 300 feet thick. The base of the formation is more than 200 feet below the National Geodetic Vertical Datum (NGVD) of 1929 along the Mississippi Gulf Coast (U. S. Geologic Survey [USGS], 1986) and approximately 100 feet below the NGVD at Gulfport. In Southern Mississippi, the Citronelle Formation ranges from 0 to 160 feet thick (USGS, 1989). The formation is highly dissected by streams in its area of outcrop and makes up many discontinuous and hydrologically independent water-bearing units or aquifers.

The Citronelle Formation is primarily unconfined except in the extreme southern regions of Mississippi. The Citronelle Formation in Gulfport is confined by a thick clay layer with varying amounts of sand. The Citronelle, the shallowest of the two major systems, is generally very permeable and readily receives and transmits water from precipitation where exposed at the surface (see Figure 2-4). Water infiltrates to the water table and, depending on the underlying units, either moves laterally to valley walls to be discharged by springs and seeps, or continues downward into underlying Miocene aquifers. If the underlying units are permeable sand, a large part of the water may migrate downward into the Miocene aquifers. Where underlying clays predominate, most of the water moves laterally to discharge points. The Citronelle Formation supports the low flow of streams and, therefore, only a part of the permeable sand and gravel in the Citronelle is saturated where unconfined conditions exist (Boswell, 1979).

Where unconfined, the groundwater hydraulic gradient roughly corresponds to the slope, which varies from 6 to 25 feet per mile. The Citronelle aquifer has an average hydraulic conductivity of about 150 feet per day (Newcome, 1975) and an average transmissivity of 7,000 square feet per day (ft^2/day) (Boswell, 1979).

The regional groundwater flow rate ranges from approximately 60 to 260 feet per year toward the south (Envirodyne, 1985).

The groundwater quality of the Citronelle aquifer is generally good. The water is characterized primarily as having a low pH, being soft to moderately hard, with low mineral content (Shows, 1970). Dissolved solids of less than 1,000 milligrams per liter (mg/l) are typical in the formation (Boswell, 1979).

2.3.5.3 Miocene Aquifer Because the Miocene formations cannot be differentiated from each other, all of the material within the Pascagoula Formation, Hattiesburg Formation, and Catahoula Sandstone is considered one unit, the Miocene aquifer system. The Miocene aquifers randomly occur along the Mississippi coast and comprise thick beds of clean quartz sand or gravel. Thin clay layers sporadically occur within the aquifers separating the sands and gravel.

The thickness and grain size of the Miocene sand beds vary considerably with many beds being more than 100 feet thick. Multiple aquifers or zones of sand that are hydraulically connected are common at any location. The number of major Miocene aquifers along the Mississippi coastline is unknown.

Recharge of the Miocene aquifers occurs through infiltration of precipitation on outcrops located north of the coastal areas, infiltration from overlying surficial deposits, and by interaquifer migration within the Miocene system. The system's water levels have been declining regionally at a rate of 1 to 2 feet per year, and at much faster rates near centers of heavy pumping.

Groundwater movement in the aquifers is generally towards the Gulf of Mexico with an average hydraulic gradient of less than 5 feet per mile. Groundwater in areas with heavy pumping has a greater hydraulic gradient. Hydraulic conductivities of the aquifer vary from approximately 195 to 1,200 gallons per day per square foot and groundwater flow ranges from 9 to 56 feet per year (Envirodyne, 1985).

In general, the Miocene aquifers have good groundwater quality except for some areas where excessive iron occurs. The groundwater is characterized as being soft to moderately hard, with a low pH, and a low mineral content (Shows, 1970). Along the coastal regions of the Mississippi, the deeper aquifers have experienced saline water intrusions (Envirodyne, 1985).

2.3.6 Water Supply Although many domestic wells and a few municipal wells are completed in the Citronelle aquifer in southern Mississippi, more than one-fourth of the groundwater withdrawn in Mississippi for uses other than irrigation is from the Miocene aquifers (Envirodyne, 1985). The Miocene offers the largest potential of groundwater supply due to its thickness, areal extent, and large natural flows.

The City of Gulfport relies on groundwater for its potable water supply. Groundwater at NCBC is withdrawn from supply wells tapped into the Miocene aquifer system, chlorinated, and stored in two 500,000-gallon storage tanks. Five potable wells are used at NCBC with well depths ranging from 722 to 1,196 feet (Envirodyne, 1985). The total capacity of these wells is approximately 3,600 gallons per minute (gpm). The approximate production rate of each potable water well is as follows:

Well No. 1, 600 gpm
Well No. 2, 500 gpm

Well No. 3, 500 gpm
Well No. 4, 1000 gpm
Well No. 5, 1000 gpm

Groundwater is used for potable, industrial, fire-fighting, and recreation purposes. Additional water is available from the City of Gulfport water system if necessary.

Two additional wells were also previously used at NCBC for production. One well was used for process water by the asphalt plant and is no longer in use. The second well was used to replenish the golf course lake and after a period of latency is again in production. Both wells were tapped into the Miocene aquifer system with well depths of 500 and 450 feet, respectively.

A list of all wells on file within a 2-mile radius of NCBC was obtained from the Mississippi Department of Environmental Quality (MDEQ) Bureau of Land and Water Resources. Any well that is 6 inches in diameter or greater must have a permit issued by the Land and Water Resources Board. Table 2-2 summarizes information regarding each of these wells.

2.4 SITE DESCRIPTIONS. As previously discussed, this workplan focuses on seven sites identified at NCBC Gulfport. These sites comprise three landfills, two disposal areas, and two fire-fighting training pits. The following presents a brief description of the seven sites to be investigated at this stage of the RI/FS process. The location of the seven sites at NCBC Gulfport is presented in Figure 2-11.

2.4.1 Site 1, Disaster Recovery Disposal Area. Site 1 is an inactive landfill that encompasses approximately 9 acres of land on the northeast corner of Seventh Street and Colby Avenue. A mock disaster recovery training area is currently located at this site. Three former catfish ponds, that are currently being filled in, are located directly north of Site 1. Disposal at Site 1 consisted of burying wastes contained in 55-gallon drums in trenches which were greater than 8 feet deep and had standing water (presumably groundwater). In operation from 1942 to 1948, the landfill served as the primary disposal area for chemical wastes generated by public works shops or the Supply Department. Wastes disposed at the landfill reportedly include paints (which may contain cadmium, chromium, and lead), oils, solvents (Stoddard, which contains petroleum distillates, xylene, toluene, methyl ethyl ketone [MEK], and trichloroethylene), paint strippers, and cleaning compounds. Analytical results of a sample taken from extremely deteriorated drums encountered during water line repair operations revealed xylene, toluene, and 1,2-dichloroethane constituents.

2.4.2 Site 2, World War II (WWII) Landfill Site 2 is an inactive landfill that encompasses approximately 11 acres of land on the northeast corner of Eighth Street and Colby Avenue. A planted pine forest and dense underbrush now occupy the site. From 1942 to 1948, general refuse collected from dumpsters located throughout NCBC Gulfport was disposed at this site. Wastes disposed in this area were reportedly burned in a structure formerly located in the northern part of the site. The ash and noncombustible material were then buried in trenches, which were greater than 8 feet deep with standing water (presumably from the surficial aquifer), in the southern part of the site.

Table 2-2 Water Wells Within a 2-Mile Radius of NCBC Gulfport, Mississippi
RI/FS Workplan NCBC Gulfport Gulfport, Mississippi

Well/Permit Number	Primary Use of Water	Well Depth (feet)	Top of Open Interval (feet)	Aquifer Code	Discharge (GPM)
L429[1]	U	---	---	---	---
L432[1]	U	---	---	---	---
L652	U	45	---	---	---
K009	U	55	53	CRNL	---
L010	U	21	19	CRNL	---
L030	U	20	18	CRNL	---
L451	H	140	120	CRNL	100
L462	H	54	49	CRNL	---
L499	H	30	20	CRNL	11
L532	H	35	25	CRNL	12
L552	H	28	18	CRNL	14
L567	H	30	20	CRNL	15
L568	H	30	20	CRNL	12
L659	H	30	20	CRNL	15
L664	I	140	120	CRNL	100
0023	H	295	285	CRNL	---
0034	H	282	267	CRNL	---
0035	H	125	119	CRNL	---
0043	H	278	273	CRNL	---
0103	H	310	304	CRNL	20
0161	I	28	18	CRNL	15
K004/GW-01073	P	785	765	GRMF	100
K033	H	392	387	GRMF	---
K068	H	252	246	GRMF	---
K085	H	580	565	GRMF	12
K086	H	431	420	GRMF	---
K089	H	193	183	GRMF	10
K090	H	194	189	GRMF	---
K091	H	323	300	GRMF	23
K096	H	200	190	GRMF	10
K099	H	283	273	GRMF	15
K114	H	414	394	GRMF	---
K117	H	420	410	GRMF	8
K312	H	430	420	GRMF	6
L017	P	848	768	GRMF	500

See notes at end of table.

Table 2-2 (Continued) Water Wells Within a 2-Mile Radius of NCBC Gulfport, Mississippi RI/FS Workplan NCBC Gulfport Gulfport, Mississippi

Well/Permit Number	Primary Use of Water	Well Depth (feet)	Top of Open Interval (feet)	Aquifer Code	Discharge (GPM)
L161[1]	T	850	820	GRMF	1,000
L162[1]	T	757	697	GRMF	500
L164	H	548	538	GRMF	---
L173	U	830	790	GRMF	253
L174	---	832	792	GRMF	---
L353[1]	I	752	712	GRMF	100
L430[1]	P	746	686	GRMF	1,000
L433[1]	P	720	649	GRMF	1,000
L667	P	952	772	GRMF	1,000
0004	I	640	610	GRMF	80
0012	I	604	564	GRMF	---
0050	H	470	460	GRMF	---
0077	H	718	688	GRMF	---
0084	H	499	489	GRMF	---
0090	H	480	460	GRMF	---
0102	H	506	496	GRMF	14
0115	H	417	407	GRMF	15
0118	H	477	462	GRMF	10
0119	H	493	483	GRMF	---
0120	H	270	261	GRMF	15
0126	P	792	772	GRMF	100
0129	H	572	557	GRMF	---
0141	H	240	230	GRMF	---
0144	H	203	193	GRMF	---
0153	H	483	478	GRMF	---
0162/GW-02055	U	760	697	GRMF	350
0168	H	610	---	GRMF	---
0191	H	260	250	GRMF	10
0192	H	198	188	GRMF	10
0195	H	788	778	GRMF	20
0196	H	594	574	GRMF	---
0197	H	198	188	GRMF	---
0202	H	219	209	GRMF	10
0204	H	283	273	GRMF	---
0206	H	282	272	GRMF	10
0208[1]	---	720	700	GRMF	60

See notes at end of table.

Table 2-2 (Continued) Water Wells Within a 2-Mile Radius of NCBC Gulfport, Mississippi RI/FS Workplan NCBC Gulfport Gulfport, Mississippi

Well/Permit Number	Primary Use of Water	Well Depth (feet)	Top of Open Interval (feet)	Aquifer Code	Discharge (GPM)
0210	H	753	713	GRMF	25
0215	H	303	283	GRMF	10
0219	H	395	385	GRMF	9
0222	H	581	565	GRMF	---
0225	H	735	720	GRMF	32
0230	H	252	242	GRMF	---
0234	H	290	280	GRMF	8
0251/GW-02056	P	850	790	GRMF	500
0266	T	582	567	GRMF	---
0267	P	693	683	GRMF	65
0274	H	516	506	GRMF	15
0291	H	580	570	GRMF	7
0296	P	862	778	GRMF	1,000
K152	H	322	312	MOCN	12
K161	I	624	604	MOCN	65
K213	H	467	457	MOCN	---
K245	H	504	494	MOCN	12
K262	H	194	184	MOCN	10
K276	H	435	425	MOCN	15
K287	H	250	240	MOCN	20
L358	H	452	442	MOCN	8
L431/GW-12894	T	850	820	MOCN	500
L454	H	2,400	---	MOCN	---
L460	H	319	309	MOCN	---
L602	H	100	90	MOCN	---
L666/GW-7985	H	750	650	MOCN	1,000
L655	H	250	240	MOCN	10
0113	H	420	410	MOCN	10
0249	H	506	496	MOCN	12
0250	H	462	442	MOCN	15
0253	H	630	620	MOCN	10
0254	H	370	360N	MOCN	10
0252	H	600	590	MOCN	20
0273	H	883	873	MOCN	15
K108	H	526	516	PCGL	10
K149	H	380	360	PCGL	10

See notes at end of table.

Table 2-2 (Continued) Water Wells Within a 2-Mile Radius of NCBC Gulfport, Mississippi RI/FS Workplan NCBC Gulfport Gulfport, Mississippi

Well/Permit Number	Primary Use of Water	Well Depth (feet)	Top of Open Interval (feet)	Aquifer Code	Discharge (GPM)
L160[1]	T	1,200	1,130	PCGL	822
L654	P	1,690	1,670	PCGL	150
GW-01493	P	880	800	GRMF	600
GW-01494	P	880	820	GRMF	1,000
GW-2053	P	611	571	MOCN	350
GW-03967	P	825	765	MOCN	1000
GW-12171[1]	I	750	730	---	200
GW-12892[1]	T	1,196	1,126	MOCN	600
GW-12893[1]	P	746	686	MOCN	1,000
GW-12894[1]	P	722	647	MOCN	1,000
GW-12896[1]	P	757	697	MOCN	480

[1]Located on NCBC

Codes:

H - Domestic
U - Unused
P - Public Supply
I - Irrigation
T - Institutional

GPM = gallons per minute

---- data not reported

Aquifers:

CRNL - Citronelle
GRMF - Graham Ferry
MOCN - Miocene
PCGL - Pascagoula

THIS PAGE LEFT INTENTIONALLY BLANK.

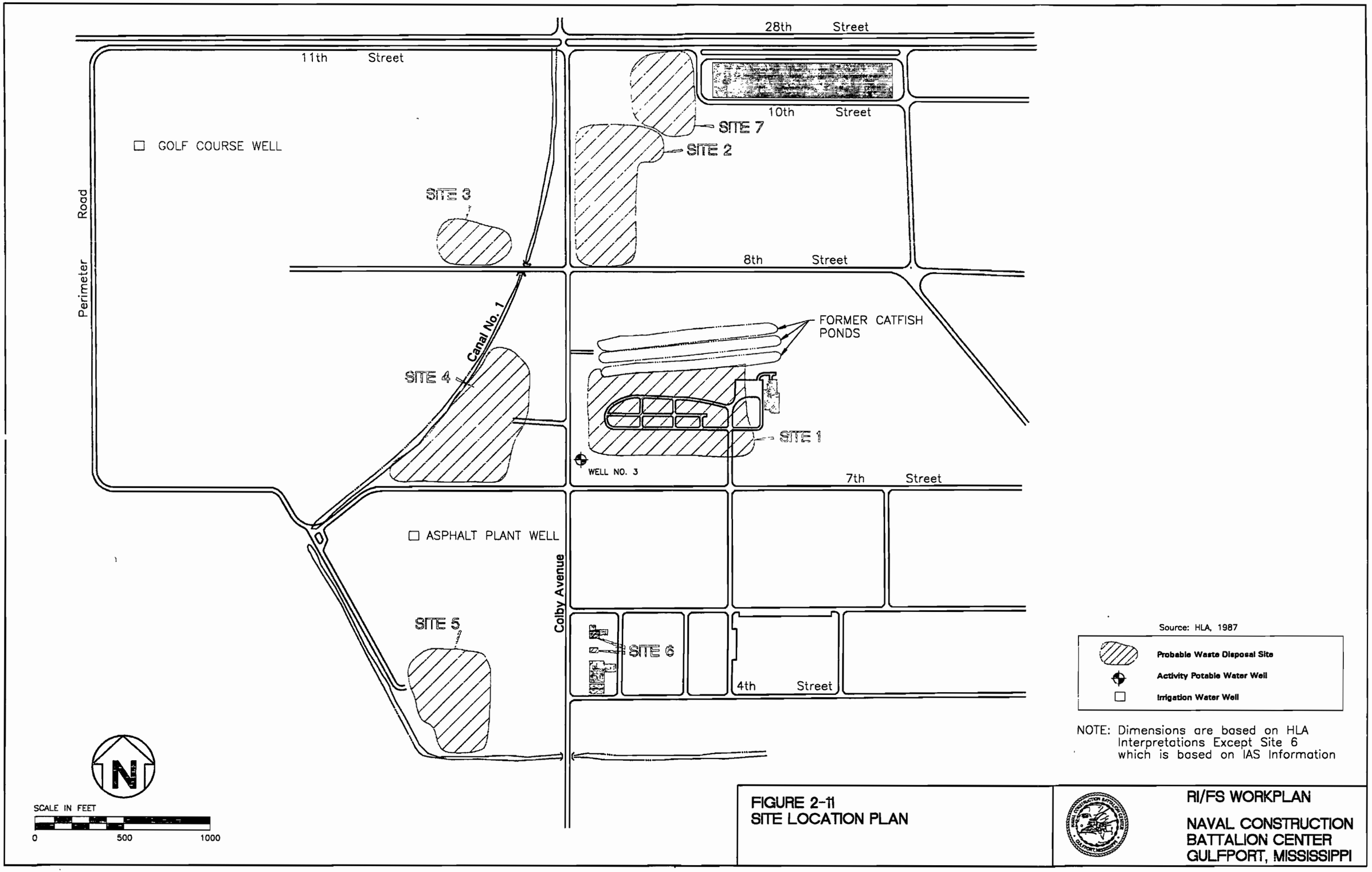

FIGURE 2-11
SITE LOCATION PLAN

RI/FS WORKPLAN

NAVAL CONSTRUCTION BATTALION CENTER
GULFPORT, MISSISSIPPI

Although the majority of the wastes disposed at the site included general refuse such as paper, cardboard, wood, and garbage, liquid wastes such as paints, paint thinners, solvents, oils, and fuels were also disposed at the site. According to the IAS, portions of the waste are in direct contact with groundwater.

2.4.3 Site 3, Northwest Landfill and Burn Pit Site 3 is an inactive landfill located on the northwest corner of Eighth Street and Colby Avenue, just west of Canal No. 1. The landfill was the primary disposal area for solid wastes and some liquid and chemical wastes from 1948 to the mid-1960s. Additionally, from the mid-1950s until 1966, a burn pit used for fire-fighting training was located in the northwestern part of the site. The unlined pit was approximately 25 feet by 15 feet by 4 feet deep. Upon closure of the site, the pit was filled with soil and there is now no indication of the pit at Site 3.

Landfill disposal operations included burning the wastes daily and burial of ashes and noncombustible materials in trenches. These trenches were approximately 6 to 8 feet deep with groundwater from the surficial aquifer standing as much as 1 foot above the trench pit surface. Fire-fighting training included extinguishing ignited liquid wastes that had been transported to the site in bowsers or 55-gallon drums and drained into the unlined pit. The fires were extinguished with a biodegradable and nontoxic protein foaming agent and water. Approximately 30,000 tons of solid wastes, and some additional liquid wastes, were disposed at the landfill. Approximately 130,000 gallons of waste fuels, oils, solvents (Stoddard, MEK, toluene, and xylene), paints, and paint thinners were burned at the site during fire-fighting training operations. Waste paints are suspected of containing cadmium, chromium, and lead. Waste fuels are also suspected of containing lead.

2.4.4 Site 4, Golf Course Landfill The Golf Course Landfill is an inactive 4-acre landfill located approximately 600 feet west of the northwest corner of Seventh Street and Colby Avenue just east of Canal No. 1. Upon closure of the site, approximately 10 feet of fill was placed over the site and, therefore, there is no longer any indication of past disposal practices. The practice putting green, the No. 9 green, and the No. 1 tee are currently located in this area. As the only landfill operating from 1966 to 1972, almost all the solid waste and some chemical and liquid wastes produced at NCBC Gulfport were disposed at the landfill.

Approximately 200,000 gallons of fuels, oils, solvents (MEK, toluene, and xylene), paints (suspected of containing cadmium, chromium, and lead), and paint thinners were presumably disposed at the landfill. Approximately 16,000 tons of solid waste were disposed at the landfill along with demolition debris from Hurricane Camille. Disposal methods during the early operational years consisted of incinerating the wastes and burying the wastes in trenches. Throughout the latter years, liquid wastes were drummed, instead of incinerated, and buried in trenches.

2.4.5 Site 5, Heavy Equipment Training Area Landfill Site 5 is an inactive landfill that was in operation from 1972 to 1976. The landfill is located approximately 200 feet west of the corner of Fourth Street and Colby Avenue and encompasses approximately 8.5 acres of land. The area is presently used as a heavy equipment training area.

Wastes disposed at the landfill included approximately 6,000 cubic yards of solid wastes and unknown quantities of liquid and chemical wastes. Liquid wastes

consisted of fuels, oils, solvents (Stoddard, toluene, xylene, and MEK), paints, and paint thinners. Chemical wastes buried at the landfill included 50 to 100 55-gallon drums of liquid dichlorodiphenyltrichloroethane (DDT) and 12 pounds of powder DDT.

2.4.6 Site 6, Fire-Fighting Training Area Site 6 consists of two unlined pits located southeast of the Fifth Street and Colby Avenue intersection. One pit was approximately 50 feet by 35 feet and 4 to 5 feet deep and the other was approximately 40 feet by 25 feet and 6 feet deep. Upon closure of the pits, the areas were filled with soil. Presently, one of the pits is partially covered by Building No. 383. Site 6 is currently used for training electricians how to construct and dismantle powerlines and transformers on electric utility poles.

From 1966 until 1975, liquid wastes from throughout NCBC, as well as flammable liquids from Keesler Air Force Base, the Air National Guard Base, and Pascagoula Shipyard were drained into the pits and set afire. One to 2 feet of water were typically present when the liquids were poured into the pits. Approximately 500,000 gallons of waste fuels, oils, solvents (Stoddard, xylene, toluene, and MEK), paints (suspected of containing cadmium, chromium, and lead), paint thinners, and cleaning compounds were burned at the site.

2.4.7 Site 7, Rubble Disposal Area Site 7 is located approximately 400 feet east of the southeast corner of Eleventh Street and Colby Avenue on the east side of Building No. 225. The site was used from 1978 to 1984 for disposal of concrete, lumber, scrap metal, and other inert materials. The materials were buried just below the ground surface. Additionally, tree clippings, sawdust, lumber, and concrete have been placed aboveground along the southeastern part of the site. There are no reports of hazardous waste disposal at this site.

2.5 PREVIOUS INVESTIGATIONS. Two previous investigations were performed to assess and characterize sites identified at NCBC Gulfport. These investigations included an IAS concluded in 1985 and a Verification Study concluded in 1987.

2.5.1 Initial Assessment Study An IAS was conducted by Envirodyne Engineers, Inc., at NCBC Gulfport in 1985 to identify sites posing a potential threat to human health and the environment due to contamination from past hazardous materials disposal practices. Nine sites were identified at NCBC Gulfport based on historical data, aerial photographs, field inspections, and personnel interviews. All nine sites were evaluated to determine contamination characteristics, migration pathways, and potential receptors. The nine sites included the following:

Site 1, Disaster Recovery Disposal Area;
Site 2, WWII Landfill;
Site 3, Northwest Landfill and Burn Pit;
Site 4, Golf Course Landfill;
Site 5, Heavy Equipment Training Area Landfill;
Site 6, Fire-Fighting Training Area;
Site 7, Rubble Disposal Area;
Site 8, Air Force Herbicide Orange Spill Area; and
Site 9, Building Foundation 271 Excavated Drum Storage Area.

The primary pathways identified for migration of contaminants from the nine IAS sites include surface water runoff and groundwater transport. A system of grassed ditches predominantly discharge to Canal No. 1, which lies on the west

part of NCBC Gulfport and discharges to Turkey Creek north of the Activity. Contaminants could enter the surface waters and eventually Turkey Creek by direct surface runoff or through groundwater discharge from the surficial aquifer. The surficial aquifer is not used for public water supply and, therefore, no direct impacts to water supplies are expected. However, the integrity of the confining layer should be evaluated due to the possibility for vertical contaminant migration. Potential receptors identified included aquatic wildlife and humans using potable water from the Citronella aquifer and using Mississippi Sound for recreational purposes.

The IAS concluded that six of the nine sites warranted further investigation under the NACIP Program to assess long-term impacts. The primary recommendation of the study was to conduct a confirmation study to confirm or disprove the existence of the suspected contamination and to quantify the extent of any existing problems. The six sites recommended for confirmation study, in order of priority, were as follows:

(1) Site 5, Heavy Equipment Training Area Landfill;
(2) Site 6, Fire-Fighting Training Area;
(3) Site 4, Golf Course Landfill;
(4) Site 3, Northwest Landfill and Burn Pit;
(5) Site 1, Disaster Recovery Disposal Area; and
(6) Site 2, WWII Landfill.

Confirmation studies at these sites were recommended to determine: (1) whether a threat to human health or the environment exists, (2) the extent of contamination, and (3) the potential for contaminant migration.

2.5.2 Verification Study A Verification Study was conducted by HLA at the NCBC Gulfport facility in 1987 to assess the existence of contamination at seven sites: (a) the six sites recommended for further evaluation by the IAS (Sites 1 through 6) and (b) one additional site, Site 7. This site was recommended by HLA due to its close proximity to Site 2 and ease of integration into the Verification Study. The field investigations completed during the 1987 Verification Study at each of the seven sites are summarized in Sections 2.5.2.1 through 2.5.2.6. Boring logs and well construction details from a total of 18 monitoring wells installed by Southwestern Laboratories of Houston, Texas, during the Verification Study are provided in Appendix A. A summary of groundwater monitoring well installation details is presented in Table 2-3. A summary of groundwater level measurements and elevations is presented in Table 2-4. Chemical analyses were performed by JTC Environmental Consultants of Rockville, Maryland. A summary of the chemical analysis performed on each sample is provided in Table 2-5.

Each of the potable wells located at NCBC Gulfport were also sampled and analyzed for the parameters presented in Table 2-5. Results of these analyses are provided in Table 2-6. Two samples of water used for decontamination were collected. Decon 1 was collected from a construction water standpipe supplied by the base potable water system. Decon 2 was collected from commercially available, bottled, deionized water. These were also analyzed for the parameters presented in Table 2-5. Results of these analyses are presented in Table 2-7.

2.5.2.1 Site 1, Disaster Recovery Disposal Area Figure 2-12 shows sampling and monitoring well locations of the Verification Study. The following paragraphs summarize activities of the Verification Study.

Table 2-3 Groundwater Monitoring Well Construction RI/FS Workplan NCBC Gulfport Gulfport, Mississippi

Boring/Well Number	Elevation of Top of Casing[1] (feet)	Height of Top of Casing Above Ground Level (feet)	Depth of Boring Below Ground Level (feet)	Screened Interval Below Ground (feet)	Soil Classification[2]
GPT-1-1	28.19	2.5	30.0	3.0 - 30.0	SM, CH
GPT-1-2	29.40	2.6	27.5	3.0 - 27.0	CL, SC, SP, CH
GPT-1-3	27.28	2.3	28.0	3.3 - 25.3	SW, SM, SP, CH
GPT-2-1	25.23	2.5	30.5	3.0 - 30.0	ML, SM, SW, CH
GPT-2-2	25.32	2.5	20.0	3.0 - 18.0	SM, ML, SP, SM, CH
GPT-2-3	24.62	2.5	15.0	3.0 - 13.0	SP, SM, SW, CH
GPT-3-1	25.63	2.5	29.0	2.5 - 28.5	CL, SM, SP, CH
GPT-3-2	25.43	2.4	29.0	3.0 - 29.0	SM, SP, CH
GPT-3-3	25.01	2.5	26.0	2.8 - 25.8	SM, SP, CH
GPT-4-1	24.83	2.5	19.0	3.0 - 19.0	SP, SM, SW, CH
GPT-4-2	28.76	2.5	28.0	2.7 - 25.7	SP, CH
GPT-4-3	31.38	2.6	29.0	3.0 - 26.0	SP, SM, SW, CH
GPT-5-1	29.57	2.5	24.0	3.0 - 21.0	SM, CH
GPT-5-2	27.55	2.5	19.0	2.5 - 18.0	SM, SP, CH
GPT-5-3	30.82	2.5	21.5	4.0 - 21.0	SC, SP, CH

See notes at end of table.

Table 2-3 (Continued) Groundwater Monitoring Well Construction RI/FS Workplan NCBC Gulfport Gulfport, Mississippi

Boring/Well Number	Elevation of Top of Casing[1] (feet)	Height of Top of Casing Above Ground Level (feet)	Depth of Boring Below Ground Level (feet)	Screened Interval Below Ground (feet)	Soil Classification[2]
GPT-6-1	31.73	2.5	29.5	3.0 - 27.5	SP, SM, CH
GPT-6-2	31.93	2.5	23.0	3.0 - 22.0	SC, SW, Ch
GPT-6-3	28.27	2.1	24.0	3.0 - 22.0	SW, CH

Notes:

[1]Top of Casing elevations referenced to National Geodetic Vertical Datum (NGVD) of 1929.

[2]Unified Soil Classification System Symbols:
SW = well graded sands, little or no fines
SM = silty sands, poorly graded sand-silt mixtures
CH = inorganic clays of high plasticity, fat clays
CL = inorganic clays of low to medium plasticity, lean clays
SC = clayey sands
SP = poorly graded sands, little or no fines
ML = inorganic silts and very fine sands, silty or clayey fine sand

Source: HLA, 1987

Table 2-4 Groundwater Level Measurements and Elevations RI/FS Workplan NCBC Gulfport Gulfport, Mississippi

Well Number	Groundwater Depth (feet BLS)		Groundwater Elevation (feet MSL)		Bottom Depth (feet BLS)
	3-30-87	10-31-91	3-30-87	10-31-91	
GPT-1-1	1.19	4.60	24.50	21.09	30.0
GPT-1-2	1.57	5.71	25.23	21.09	27.0
GPT-1-3	0.82	4.61	23.96	20.39	26.0
GPT-2-1	2.82	5.50	19.91	17.23	30.0
GPT-2-2	2.51	5.59	20.31	17.23	18.0
GPT-2-3	1.19	3.75	20.93	18.37	13.0
GPT-3-1	1.91	6.10	21.22	17.03	28.5
GPT-3-2	4.39	6.30	18.64	16.73	29.0
GPT-3-3	4.31	5.89	18.20	16.62	25.8
GPT-4-1	0.16	3.00	22.17	19.33	19.0
GPT-4-2	2.53	5.53	23.73	20.73	25.7
GPT-4-3	6.94	9.52	21.84	19.26	26.0
GPT-5-1	4.86	7.26	22.21	19.81	21.0
GPT-5-2	2.77	5.03	22.28	20.02	18.0
GPT-5-3	6.97	9.36	21.35	18.96	21.0
GPT-6-1	4.39	10.19	24.84	19.04	29.5
GPT-6-2	4.22	7.38	25.19	22.05	23.0
GPT-6-3	1.45	4.30	24.72	21.87	22.0

Notes:

BLS = below land surface
MSL = mean sea level

Table 2-5 Chemical and Physical Parameters Identified for Analysis of Sediment, Soil, and Water Samples RI/FS Workplan NCBC Gulfport Gulfport, Mississippi

Parameter	Surface and Groundwater Samples		Sediment and Soil Samples	
	Analytical Method Number	Method Detection Limit	Analytical Method Number	Method Detection Limit
pH	[1]150.1	0.1 su	[2]3-51	0.01 su
Specific conductance	[1]120.1	1 μmhos/cm	Not applicable	
Total Organic Carbon (TOC)	[1]415.2	1 mg/l	[3]DC-80	100 mg/kg
Total Organic Halogen (TOX)	[4]9020	5 μg/l	[5]DX-20	200 mg/kg
Chemical Oxygen Demand (COD)	[6]Hach	5 mg/l	[2]3-393	50 mg/kg
Oil and grease (O and G)	[1]413.2	1.0 mg/l	[2]3-284	100 mg/kg
Cadmium (Cd)	[1]213.2	5 μg/l	[1]213.2	3 mg/kg
Chromium (Cr)	[1]218.2	10 μg/l	[1]218.2	5 mg/kg
Lead (Pb)	[1]239.2	5 μg/l	[1]239.2	3 mg/kg
Volatile organics[8]	[7]624		Not applicable	
Acrolein		20		
Acrylonitrile		10		
Benzene		5		
Bromoform		5		
Bromomethane		10		
Carbon tetrachloride		5		
Chlorobenzene		5		
Chlorodibromomethane		5		
Chloroethane		10		
Chloromethane		10		
1,1-Dichloroethane		5		
1,2-Dichloroethane		5		
1,1-Dichloroethylene		5		
1,2-Dichloropropane		5		
trans-1,3-Dichloropropene		5		
Ethyl Benzene		5		
Methylene Chloride		5		
1,1,2,2-Tetrachloroethane		5		
Tetrachloroethylene		5		
Toluene		5		
1,2-trans-Dichloroethylene		5		
1,1,1-Trichloroethane		5		
1,1,2-Trichloroethane		5		

See notes at end of table.

Table 2-5 (Continued) Chemical and Physical Parameters Identified for Analysis of Sediment, Soil, and Water Samples RI/FS Workplan NCBC Gulfport Gulfport, Mississippi

Parameter	Surface and Groundwater Samples		Sediment and Soil Samples	
	Analytical Method Number	Method Detection Limit	Analytical Method Number	Method Detection Limit
Trichloroethylene		5		
Trichlorofluoromethane		10		
Vinyl chloride		10		
cis-1,3-Dichloropropene		10		
Semivolatile organics[8]	[7]625		Not applicable	
2-Chlorophenol		10		
2,4-Dichlorophenol		10		
2,4-Dimethylphenol		10		
4,6-Dinitro-o-cresol		50		
2,4-Dinitrophenol		50		
2-Nitrophenol		10		
4-Nitrophenol		50		
P-chloro-m-cresol		10		
Pentachlorophenol		50		
Phenol		10		
2,4,5-Trichlorophenol		50		
2,4,6-Trichlorophenol		10		
Acenaphthene		10		
Acenaphthylene		10		
Anthracene		10		
Benzidine		50		
Benzo(a)anthracene		10		
Benzo(a)pyrene		10		
Benzo(b)fluoranthene		10		
Benzo(ghi)perylene		10		
Benzo(k)fluoranthene		10		
bis(2-Chloroethoxy)methane		10		
bis(2-Chloroethyl)ether		10		
bis(2-Chloroisoprophyl)ether		10		
bis(2-Ethylhexyl)phthalate		10		
4-Bromophenylphenyl ether		10		
Butyl benzyl phthalate		10		
2-Chloronaphthalene		10		

See notes at end of table.

Table 2-5 (Continued) Chemical and Physical Parameters Identified for Analysis of Sediment, Soil, and Water Samples RI/FS Workplan NCBC Gulfport Gulfport, Mississippi

Parameter	Surface and Groundwater Samples		Sediment and Soil Samples	
	Analytical Method Number	Method Detection Limit	Analytical Method Number	Method Detection Limit
4-Chlorophenyl phenyl ether		10		
Chrysene		10		
Dibenzo(a,h)anthracene		10		
1,2-Dichlorobenzene		10		
1,3-Dichlorobenzene		10		
1,4-Dichlorobenzene		10		
3,3'-Dichlorobenzidine		20		
Diethylphthalate		10		
Dimethyl phthalate		10		
Di-n-butylphthalate		10		
1,2-Diphenylhydrazine		10		
2,4-Dinitrotoluene		10		
2,6-Dinitrotoluene		10		
Di-n-octyl phthalate		10		
Fluoranthene		10		
Fluorene		10		
Hexachlorobenzene		10		
Hexachlorobutadiene		10		
Hexachlorocyclopentadiene		10		
Hexachloroethane		10		
Ideno(1,2,3-cd)pyrene		10		
Isophorone		10		
Naphthalene		10		
Nitrobenzene		10		
N-nitrosodi-n-propylamine		10		
N-nitrosodiphenylamine		10		
Phenanthrene		10		
Pyrene		10		
1,2,4-Trichlorobenzene		10		
Pesticides and PCBs[8]	[7]608		Not applicable	
Aldrin		0.1		
alpha-BHC		0.1		
beta-BHC		0.1		

See notes at end of table.

Table 2-5 (Continued) Chemical and Physical Parameters Identified for Analysis of Sediment, Soil, and Water Samples RI/FS Workplan NCBC Gulfport Gulfport, Mississippi

Parameter	Surface and Groundwater Samples		Sediment and Soil Samples	
	Analytical Method Number	Method Detection Limit	Analytical Method Number	Method Detection Limit
gamma-BHC		0.1		
delta-BHC		0.1		
alpha Chlorodane		0.5		
gamma Chlorodane		0.5		
4,4'-DDT		0.1		
4,4'-DDE		0.1		
4,4'-DDD		0.1		
Dieldrin		0.1		
alpha-Endosulfan		0.1		
beta-Endosulfan		0.1		
Endosulfan sulfate		0.1		
Endrin		0.1		
Endrin ketone		0.1		
Heptachlor		0.1		
Heptachlor epoxide		0.1		
Methoxychlor		0.5		
PCB-1242		1.0		
PCB-1254		1.0		
PCB-1221		1.0		
PCB-1232		1.0		
PCB-1248		1.0		
PCB-1260		1.0		
PCB-1016		1.0		
Toxaphene		1.0		

[1]Methods for Chemical Analysis of Water and Wastes, USEPA-600/4-79-020, March 1979.
[2]Plumb, R.H., Jr., 1981, Procedures for Handling Sediment and Water Samples, Technical Report USEPA/CE-81-1.
[3]Dohrmann DC-80 Analysis Specifications.
[4]USEPA Test Methods for Evaluating Solid Waste-Physical/Chemical Methods, SW-846, 2nd Edition, USEPA, 1985a.
[5]Dohrmann DX-20 Analysis Specification.
[6]HACH COD Specifications.
[7]USEPA Test Methods for Organic Chemical Analysis of Municipal and Industrial Wastewater, USEPA-600/4-82-057, July 1982.
[8]All method detection limits for volatile and semi-volatile organics and pesticides/PCB's are in μg/l.

Notes: SU = standard units
umhos/cm = micromhos per centimeter
ug/l = micrograms per liter
PCBs = polychlorinated biphenyl compounds
mg/kg = milligrams per kilogram
mg/l = milligrams per liter

Source: HLA, 1987.

Table 2-6 Summary of Chemical Analysis Results, Activity Potable Wells RI/FS Workplan NCBC Gulfport Gulfport, Mississippi

Parameter	Detection Limit	Location Well No. 1	Well No. 2	Well No. 3	Well No. 4	Well No. 5
Sampling Date		03/27/87	03/27/87	03/27/87	03/27/87	03/27/87
Temperature	-	26	25	24	28	24
pH (field)	0.1	9.02	8.73	7.57	8.36	7.49
Specific conductance (field)	1	740	400	310	320	310
pH (laboratory)	0.1	8.69	9.03	8.30	8.88	8.00
Specific conductance (laboratory)	1	500 (500)	220	190	190	190
cadmium	5.0	<4.7	<4.7	<4.7	<4.7	<4.7
chromium	10.0	<7.8	<7.8	<7.8	<7.8	9.0
Lead	5.0	<5.0	<5.0	<5.0	<5.0	<5.0
Volatile organics	ND	ND	ND	ND	ND	ND
Toluene	5.0	7	7	11	10	6
Acid-base neutrals		ND	ND	ND	ND	ND
Phenol	10	12				
bis(2-Ethylhexyl) phthalate	10	24		277		

Source: HLA, 1987.

Notes:

All analysis results are reported in µg/l except temperature, pH, and specific conductance which are in °C, standard units and µmhos/cm at 25°C, respectively.

Temperature, pH (field), and specific conductance (field) data for groundwater samples are an average of three separate measurements.

Results presented in parentheses are for duplicate analyses.

- = Sample not analyzed or measured for these parameters.
ND = not detected at or below the reporting unit for all chemical parameters not specifically reported (see Table 2-5).

Table 2-7 Summary of Chemical Analysis Results, Field and Laboratory Control Samples RI/FS Workplan NCBC Gulfport Gulfport, Mississippi

Parameter	Decon 1	Decon 2
Sampling date	04/07/87	04/07/87
Temperature	22	21
pH (field)	7.42	678[1]
Specific conductance (field)	245	20
Total Organic Carbon (TOC)	3	<1
Total Organic Halogens (TOX)	7	11
Chemical Oxygen Demand (COD)	24	19
oil and grease (O and G)	1.5	1.7
cadmium (Cd)	<4.7	<4.7
chromium (Cr)	<7.8	<7.8
lead (Pb)	<5.0	<5.0
Volatile organics	ND	ND
Toluene		8
Chloroform	14	
Dichlorobromomethane	2[2]	
	ND	ND
Acid-Base Neutrals		
Pesticides-PCBs	ND	ND

Source: HLA, 1987.

[1]As reported in Verification Study and apparently decimal omitted (6.78).
[2]Found below detection limit for analytical method.

Notes:

All analyses results are reported in µg/l except TOC, COD and O and G, which are reported in mg/l. Temperature, pH, and specific conductance are reported in °C, standard units and µmhos/cm at 25°C, respectively.

Results presented in parentheses are for duplicate analyses.

- = Sample not analyzed or measured for these parameters.
Cd = cadmium
COD = chemical oxygen demand
Cr = chromium
G = grease
ND = Not detected at or below the reporting unit for all chemical parameters not specifically reported (see table 2-5).
O = oil
Pb = lead
PCB = polychlorinated biphenyl compounds

COMPOSITE SEDIMENT SAMPLES (SD1-4) AND SURFACE WATER SAMPLE (SW1-4) WERE COLLECTED FROM NORTH CATFISH POND APPROXIMATELY 110 FT. NORTH OF SAMPLES COLLECTED IN SOUTH CATFISH POND.

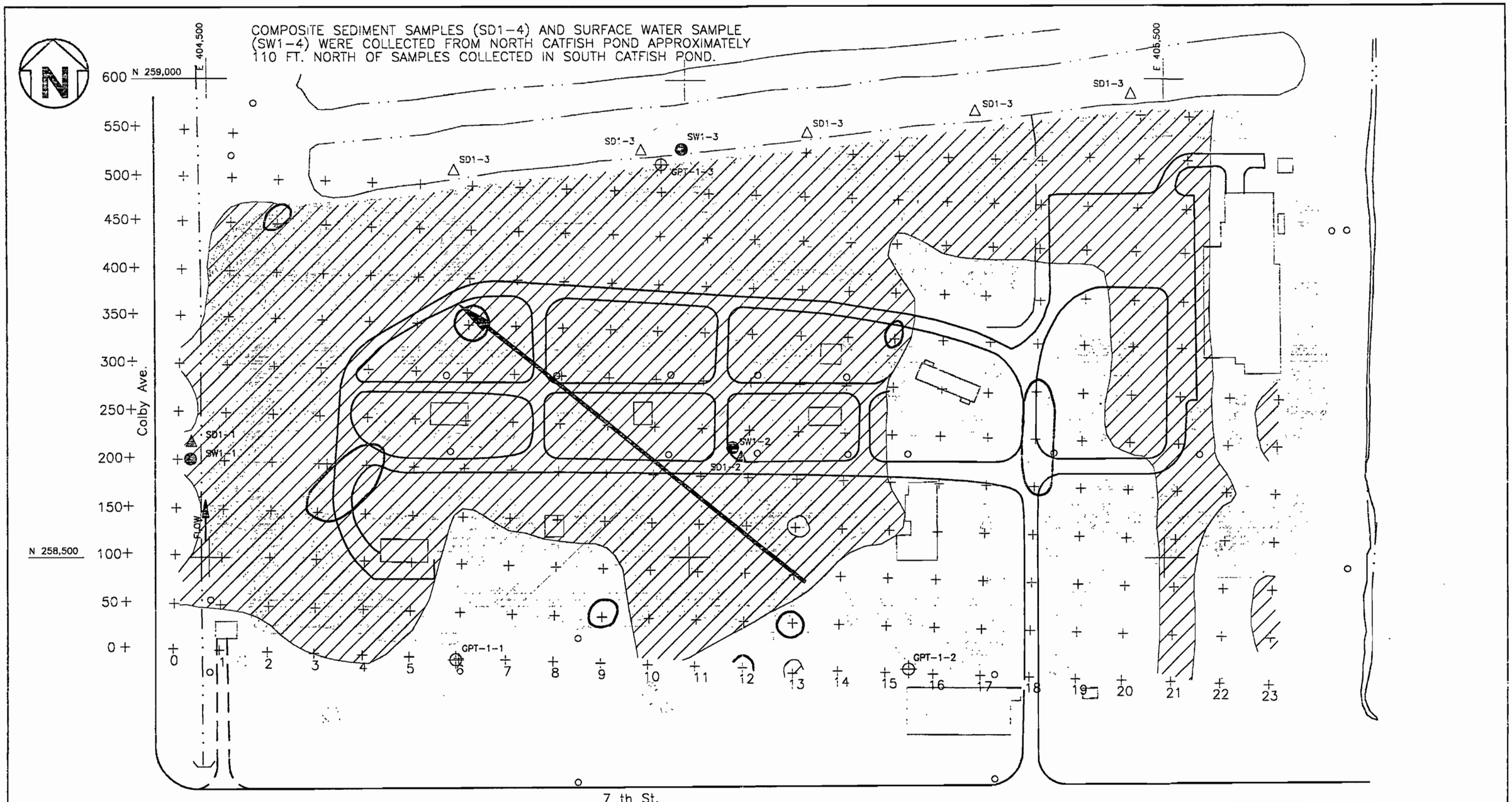

Source: HLA, 1987

Reference: Map of Harrison County, Mississippi by Continental Aerial Surveys, Inc., 1982 as modified by HLA Field Reconnaissance, March, 1987.

Boundary of Area of VLF Values above Background	
Area of Magnetic Anomalies	
Geophysical Station Location	
2	Line Number
250	Station Number
Heavily Vegetated Area	
SW1-1	Surface Water Sample Number and Location
GPT-1-1	Groundwater Monitoring Well Number and Location
SD1-1	Sediment Sample Number and Location
SD1-3	Composite Sediment Sample
	Approximate Direction of Groundwater Flow in Surficial Aquifer

SCALE IN FEET

0 100 200

FIGURE 2-12
SAMPLING AND MONITORING WELL LOCATIONS FROM PREVIOUS INVESTIGATIONS
SITE-1

RI/FS WORKPLAN

NAVAL CONSTRUCTION BATTALION CENTER
GULFPORT, MISSISSIPPI

Three soil borings (GPT-1-1 through GPT-1-3) were drilled at Site 1 (Figure 2-12) to total depths ranging from 27.5 to 30 feet BLS. Monitoring wells were installed in all three soil borings. Surface water and sediment samples were collected from the northern and southern catfish ponds (SW1-3, and SD1-3), a drainage ditch located in the central part of the site (SW1-2 and SD1-2), and a drainage ditch along Colby Avenue at the west end of Site 1 (SW1-1 and SD1-1) (see Figure 2-12). No surface or subsurface soil samples were collected from the site. Table 2-5 summarizes analyses, methods, and detection limits for the Verification Study samples.

Geophysical studies were conducted using a Scintrex-IGS™ (Integrated Geophysical System) with magnetometer and very low frequency (VLF) sensors. A 50-foot by 50-foot grid was established extending 1,150 feet in the east- to -west direction and up to 550 feet north of the baseline. Areas of magnetic anomalies and VLF values detected above background are shown on Figure 2-12.

Water-level data indicated the groundwater flow in the surficial aquifer generally flows towards the northwest, different than the presumed regional flow direction (south). Therefore, GPT-1-1 and GPT-1-2 are upgradient instead of downgradient. The results of the sediment, surface water, and groundwater samples were consistent for Site 1. In general, concentrations of chromium and lead were detected at levels ranging from 81 micrograms per liter (μg/l) to 392 μg/l and 52 to 79 μg/l, respectively. However, no volatile organic compounds (VOC), semivolatile organic compounds (SVOC), pesticides, polychlorinated biphenyls (PCBs) were detected in the groundwater samples. Analytical results are summarized in Table 2-8.

2.5.2.2 Site 2, WWII Landfill, and Site 7, Rubble Disposal Area Figure 2-13 shows sampling and monitoring well locations at Sites 2 and 7 from the Verification Study. The following paragraphs summarize activities of the Verification Study.

Because Site 7 intersects Site 2, the sites were combined and treated as one site for purposes of the field investigations (see Figure 2-13). Three borings were drilled at these combined sites, two (GPT-2-1 and GPT-2-2) along the southern side of Site 2 and one (GPT-2-3) along the northern side of Site 7. The total depth of borings ranged from 15.5 to 30.5 feet. Monitoring wells were installed in all three borings. One surface water sample (SW2-1) and one sediment sample (SD2-1) were collected from a drainage ditch just south of Eighth Street. No surface or subsurface soil samples were collected from the site. Table 2-5 summarizes analyses, methods, and detection limits for the Verification Study samples.

A geophysical survey using a Scintrex-IGS™ was conducted at these sites. Data were collected from a 50-foot by 50-foot grid system on Site 2 and a 100-foot by 100-foot grid system on Site 7. The grid extended 600 feet in the east-to-west direction and approximately 800 feet north of the baseline on Site 2. On site 7, the grid extended 400 feet in the east-to-west direction and 500 feet north of the baseline. Areas of magnetic anomalies and VLF values detected above background are shown on Figure 2-13.

Water-level data indicated that the site-specific direction of groundwater flow is different than the regional direction (south) that HLA originally presumed.

Table 2-8 Summary of Chemical Analysis Results, Site 1 RI/FS Workplan NCBC Gulfport Gulfport, Mississippi

Location	GPT-1-1	GPT-1-2	GPT-1-3	SW1-1	SW1-2	SW1-3	SW1-4
Sampling Date	3/29/87	3/28/87	3/28/87	3/28/87	3/28/87	3/28/87	3/28/87
Temperature	17	17	15	20	17	20	24
pH (field)	5.03	4.59	5.34	6.00	7.34	7.01	7.64
Specific conductance (field)	150	130	200	160	620	100	100
pH (laboratory)	5.61	5.25	5.73	6.46	7.18	9.41	7.10
Specific conductance (laboratory)	100	90	120	110	390	62	48
Total Organic Carbon (TOC)	-	-	-	6	10	6	6
Total Organic Halogens (TOX)	-	-	-	42	228	33	73(73)
Chemical Oxygen Demand (COD)	-	-	-	22	37	47	17
oil and grease (O and G)	-	-	-	1.4	<1.0	1.0	1.2
cadmium (Cd)	<4.7 (<4.7)	<4.7(<4.7)	<4.7	<4.7	<4.7	<4.7	<4.7
chromium (Cr)	136 (165)	392 (415)	81	<7.8	<7.8	<7.8	<7.8
lead (Pb)	52 (61)	79 (70)	66	<5.0	<5.0	<5.0	<5.0
Volatile organics	ND	ND	ND	-	-	-	-
Semivolatile organics	ND	ND	ND	-	-	-	-
Pesticides and PCBs	ND	ND	ND	-	-	-	-

See notes at end of table.

Table 2-8 (Continued) Summary of Chemical Analysis Results, Site 1 RI/FS Workplan NCBC Gulfport Gulfport, Mississippi

Location	SD1-1	SD1-2	SD2-3	SD1-4
Sampling Date	3/28/87	3/28/87	3/28/87	3/28/87
Temperature	-	-	-	-
pH (field)	-	-	-	-
Specific conductance (field)	-	-	-	-
pH (laboratory)	6.15	5.44 (5.49)	5.79	5.84
Specific conductance (laboratory)	-	-	-	-
Total Organic Carbon (TOC)	6,400	4,200	1,900	1,000
Total Organic Halogens (TOX)	280	150 (160)	210	260
Chemical Oxygen Demand (COD)	5,480	3,530 (3,180)	2,190	2,670
oil and grease (O and G)	366	<122	<134	<131 (<131)
cadmium (Cd)	<3.2	<2.9	<3.2	<3.1 (<3.1)
chromium (Cr)	<5.3	7.3	<5.2	7.2 (6.6)
lead (Pb)	<3.4	<3.0	<3.4	<3.3 (<3.3)
Volatile organics	-	-	-	-
Semivolatile organics	-	-	-	-
Pesticides and PCBs	-	-	-	-

Source: HLA, 1987.

Notes:

All analyses results for water samples are reported in µg/l except TOC, COD, and O and G which are reported in mg/l. Analyses results for sediment and soil samples are reported in mg/kg. Temperature, pH, and specific conductance are reported in °C, standard units, and µmhos/cm at 25°C, respectively.

Temperature, pH (field), and specific conductance (field) data for groundwater samples are an average of three separate measurements.

Results presented in parentheses are for duplicate analyses.

- = Sample not analyzed or measured for these parameters.
Cd = cadmium
COD = chemical oxygen demand
Cr = chromium
G = grease
ND = Not detected at or below the reporting unit for all chemical parameters not specifically reported (see table 2-5).
O = oil
Pb = lead
PCB = polychlorinated biphenyl compounds

THIS PAGE LEFT INTENTIONALLY BLANK.

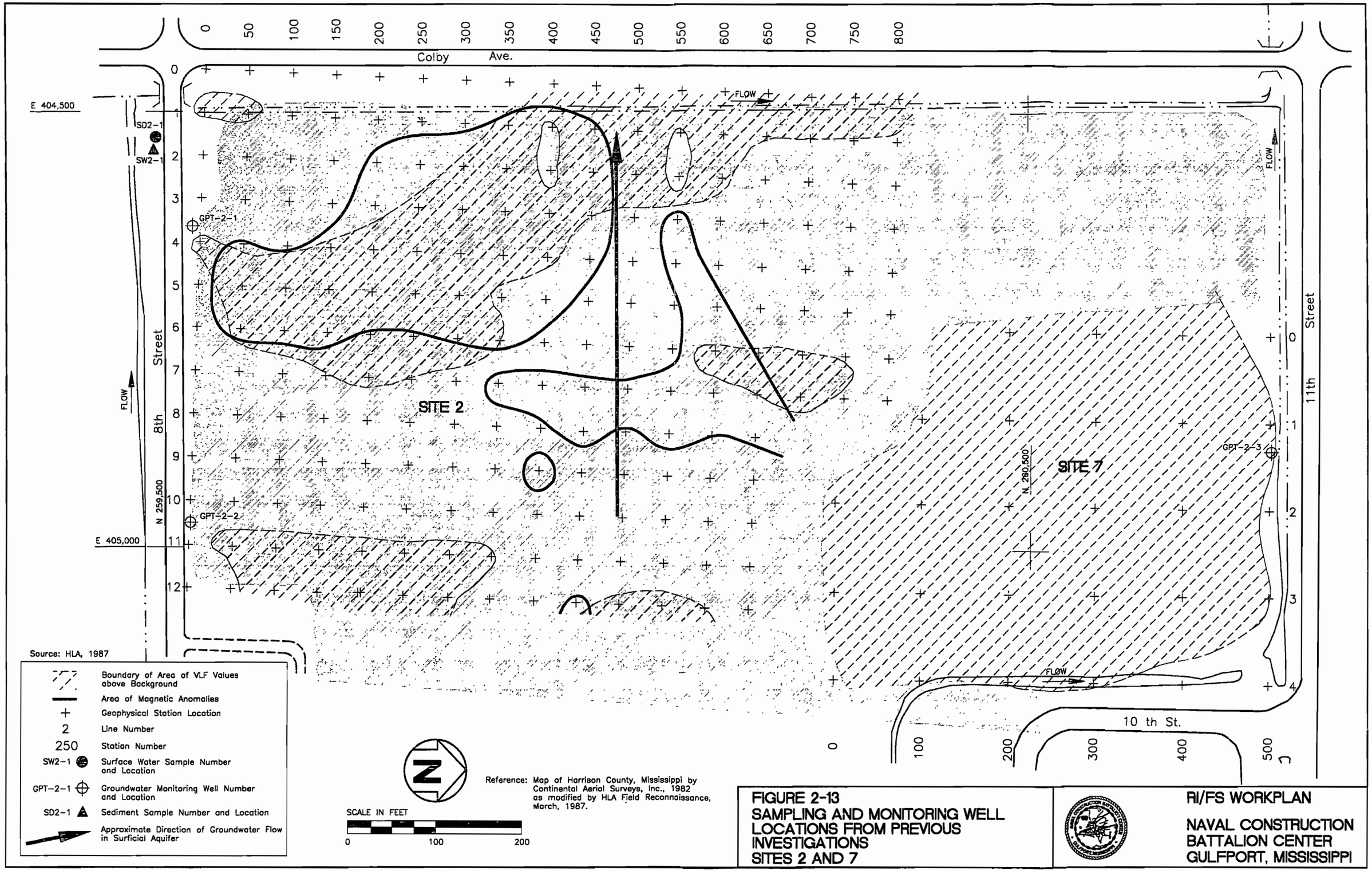

FIGURE 2-13
SAMPLING AND MONITORING WELL LOCATIONS FROM PREVIOUS INVESTIGATIONS
SITES 2 AND 7

RI/FS WORKPLAN

NAVAL CONSTRUCTION BATTALION CENTER
GULFPORT, MISSISSIPPI

Because of this, wells GPT-2-1 and GPT-2-2 are upgradient rather than downgradient. Concentrations of 1,2-dichloroethylene (37 μg/l), trichloroethylene (5 μg/l), and toluene (1 μg/l) were detected in samples from monitoring well GPT-2-3. Lead and chromium were detected in samples from all three monitoring wells at levels ranging from 13 to 41 μg/l and 21 to 73 μg/l, respectively. No pesticides or PCBs were detected in groundwater samples. Analytical results of the groundwater, surface water, and sediment samples are listed in Table 2-9.

2.5.2.3 Site 3, Northwest Landfill and Burn Pit Figure 2-14 shows sampling and monitoring well locations at Site 3 from the Verification Study. The following paragraphs summarize activities of the Verification Study.

Three soil borings (GPT-3-1, GPT-3-2, and GPT-3-3) were drilled at Site 3 (see Figure 2-14) to total depths ranging from 26 to 29 feet BLS. Monitoring wells were installed in all three soil borings. Surface water (SW1-1) and sediment (SD1-1) samples were collected from a drainage ditch just south of Eighth Street. No surface or subsurface soil samples were collected from the site. Table 2-5 summarizes analyses, methods, and detection limits for the Verification Study samples.

A geophysical study was conducted using a Scintrex-IGS™. A 50-foot by 50-foot grid was established extending 1,250 feet in the east-to-west direction and up to 350 north of the baseline. A large concentration of magnetic anomalies was observed in the center of the site. Areas of magnetic anomalies and VLF values detected above background are shown on Figure 2-14.

Water-level data indicated the site-specific groundwater flow direction in the surficial aquifer is towards the northeast, different than the regional flow direction (south) originally presumed. Therefore, GPT-3-1 and GPT-3-2 are upgradient instead of downgradient. The results of the sediment, surface water, and groundwater samples were consistent at Site 3. Lead and chromium were detected at levels ranging from 17 to 35 μg/l and 40 to 70 μg/l, respectively, in groundwater samples. No VOC, SVOC, pesticides, or PCBs were detected in the groundwater samples. Analytical results are summarized in Table 2-10.

2.5.2.4 Site 4, Golf Course Landfill Figure 2-15 shows sampling and monitoring well locations at Site 4 from the Verification Study. The following paragraphs summarize activities of the Verification Study.

Three borings were drilled at the site, two (GPT-4-1 and GPT-4-2) along the south side of the site and one (GPT-4-3) along the northern side of Site 4 (see Figure 2-15). Total depth of borings ranged from 19 to 29 feet BLS. Monitoring wells were installed in all three borings. One surface water sample (SW4-1) and one sediment sample (SD4-1) were collected from Canal No. 1. No surface or subsurface soil samples were collected from the site. Table 2-5 summarizes analyses, methods, and detection limits for the Verification Study samples.

A geophysical survey using Scintrex-IGS™ was conducted at these sites. Data were collected from a 50-foot by 50-foot grid system extending 600 feet in the east-to-west direction and approximately 650 feet north of the baseline. Magnetometer anomalies and VLF values detected above background were observed throughout the site. The locations of these anomalies and elevated values are shown in Figure 2-15.

Table 2-9 Summary of Chemical Analysis Results, Sites 2 and 7 RI/FS Workplan NCBC Gulfport Gulfport, Mississippi

Location	GPT-2-1	GPT-2-2	GPT-2-3	SW2-1	SD2-1
Sampling Date	3/28/87	3/28/87	3/28/87	3/26/87	3/26/87
Temperature	20	18	17	20	-
pH (field)	5.99	5.49	5.19	7.41	-
Specific conductance (field)	230	210	660	270	-
pH (laboratory)	6.42	5.66	5.61	7.52(7.48)	5.80
Specific conductance (laboratory)	160	120	440	200(200)	-
Total Organic Carbon (TOC)	-	-	-	10	2,800
Total Organic Halogen (TOX)	-	-	-	73	300
Chemical Oxygen Demand (COD)	-	-	-	40(35)	8,240
oil and grease (O and G)	-	-	-	1.5	<123
cadmium (Cd)	<4.7	<4.7	<4.7	<4.7(<4.7)	<2.9(<2.9)
chromium (Cr)	26	73	21	<7.8(<7.8)	4.9(<4.8)
lead (Pb)	20	41	13	<5.0(<5.0)	4.7(3.7)
Volatile organics	ND	ND	ND	-	-
1,2-trans-Dichloroethylene			37		
Trichloroethylene			5		
Toluene			1[1]		
Semivolatile Organics	ND	ND	ND	-	-
bis(2-Ethylhexyl) Phthalate			21		
Pesticides/PCBs	ND	ND	ND		

Source: HLA, 1987.

[1] Found below detection limit for analytical method.

Notes:

All analyses results for water samples are reported µg/l except TOC, COD, and O and G which are reported in mg/l. Analyses results for sediment and soil samples are reported in mg/kg. Temperature, pH, and specific conductance are reported in °C, standard units, and µmhos/cm at 25°C, respectively.

Temperature, pH (field), and specific conductance (field) data for groundwater samples are an average of three separate measurements.

Results presented in parentheses are for duplicate analyses.

- = Sample not analyzed or measured for these parameters.
Cd = cadmium
COD = chemical oxygen demand
Cr = chromium
G = grease
ND = Not detected at or below the reporting unit for all chemical parameters not specifically reported (see table 2-5).
O = oil
Pb = lead
PCB = polychlorinated biphenyl compounds

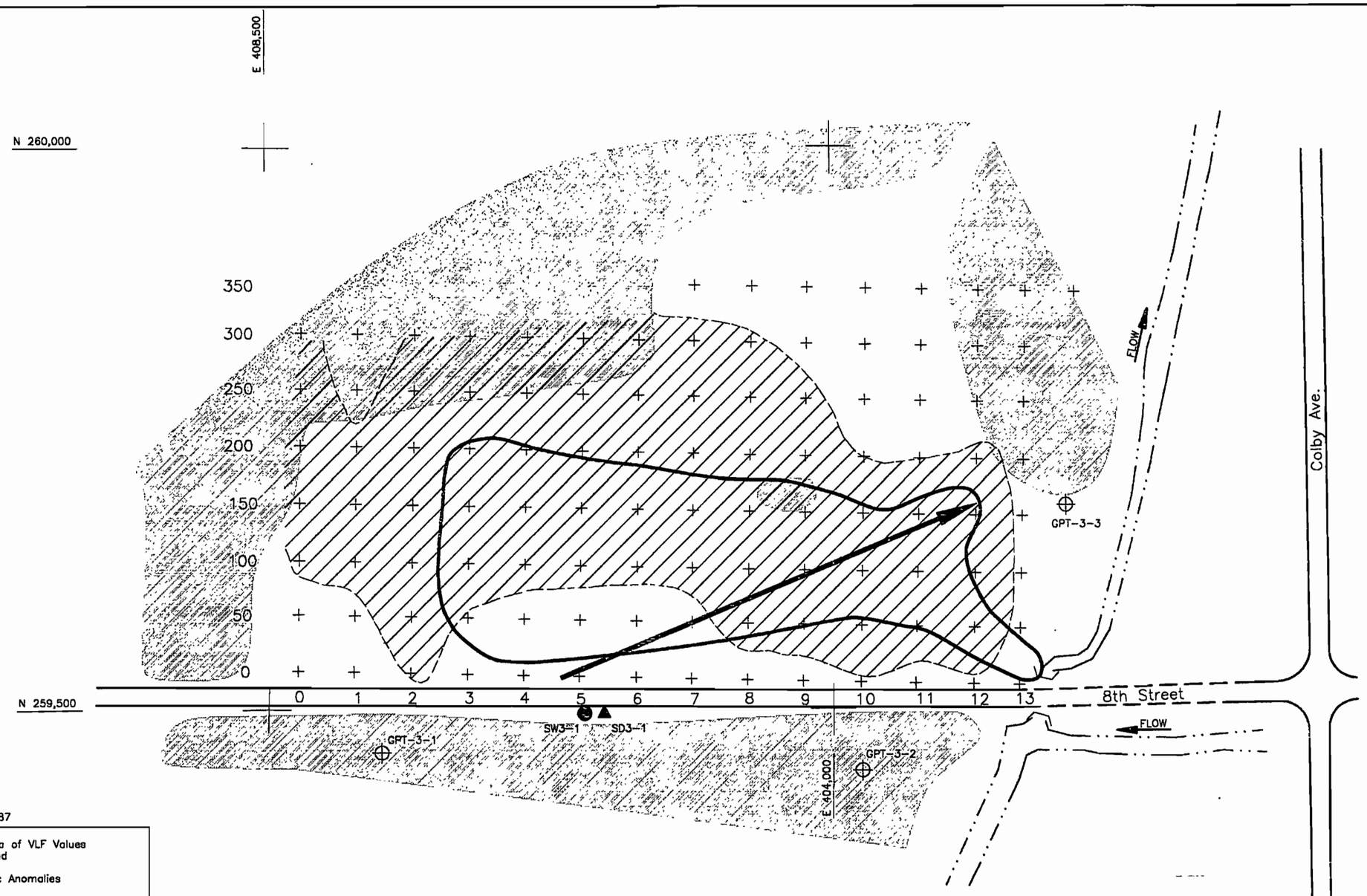

Source: HLA, 1987

- Boundary of Area of VLF Values above Background
- Area of Magnetic Anomalies
- Geophysical Station Location
- 2 Line Number
- 250 Station Number
- SW3-1 Surface Water Sample Number and Location
- GPT-3-1 Groundwater Monitoring Well Number and Location
- SD3-1 Sediment Sample Number and Location
- Approximate Direction of Groundwater Flow in Surficial Aquifer

N

SCALE IN FEET

0 100 200

Reference: Map of Harrison County, Mississippi by Continental Aerial Surveys, Inc., 1982 as modified by HLA Field Reconnaissance, March, 1987.

FIGURE 2-14
SAMPLING AND MONITORING WELL LOCATIONS FROM PREVIOUS INVESTIGATIONS
SITE-3

RI/FS WORKPLAN

NAVAL CONSTRUCTION BATTALION CENTER
GULFPORT, MISSISSIPPI

Table 2-10 Summary of Chemical Analysis Results, Site 3 RI/FS Workplan NCBC Gulfport Gulfport, Mississippi

Location	GPT-3-1	GPT-3-2	GPT-3-3	SW3-1	SD3-1
Sampling Date	3/28/87	3/28/81	3/28/87	4/7/87	5/4/87
Temperature	17	15	19	16	-
pH (field)	5.24	4.96	4.88	6.12	-
Specific conductance (field)	180	100	120	95	-
pH (laboratory)	5.75	4.66	5.41	6.06(7.48)	4.76(4.78)
Specific conductance (laboratory)	140	140	80	92	-
Total Organic Carbon (TOC)	-	-	-	8	4,800
Total Organic Halogen (TOX)	-	-	-	29	<200
Chemical Oxygen Demand (COD)	-	-	-	28	1450(1280)
oil and grease (O and G)	-	-	-	2.1(2.2)	<123(123)
cadimum (Cd)	<4.7	<4.7	<4.7	<4.7(<4.7)	<2.9
chromium (Cr)	40	71	45	<7.8(<7.8)	5.0
lead (Pb)	26	35	17	<5.0(<5.0)	6.8
Volatile organics	ND	ND	ND	-	-
Semivolatile organics	ND	ND	ND	-	-
Pesticides/PCBs	ND	ND	ND	-	-

Source: HLA, 1987.

Notes:

All analyses results for water samples are reported µg/l except TOC, COD, and O and G which are reported in mg/l. Analyses results for sediment and soil samples are reported in mg/kg. Temperature, pH, and specific conductance are reported in °C, units, and µmhos/cm at 25°C, respectively.

Temperature, pH (field), and Specific Conductance (field) data for groundwater samples are an average of three separate measurements.

Results presented in parentheses are for duplicate analyses.

- = Sample not analyzed or measured for these parameters.
Cd = cadmium
COD = chemical oxygen demand
Cr = chromium
G = grease
ND = Not detected at or below the reporting unit for all chemical parameters not specifically reported (see table 2-5).
O = oil
Pb = lead
PCB = polychlorinated biphenyl compounds

THIS PAGE LEFT INTENTIONALLY BLANK.

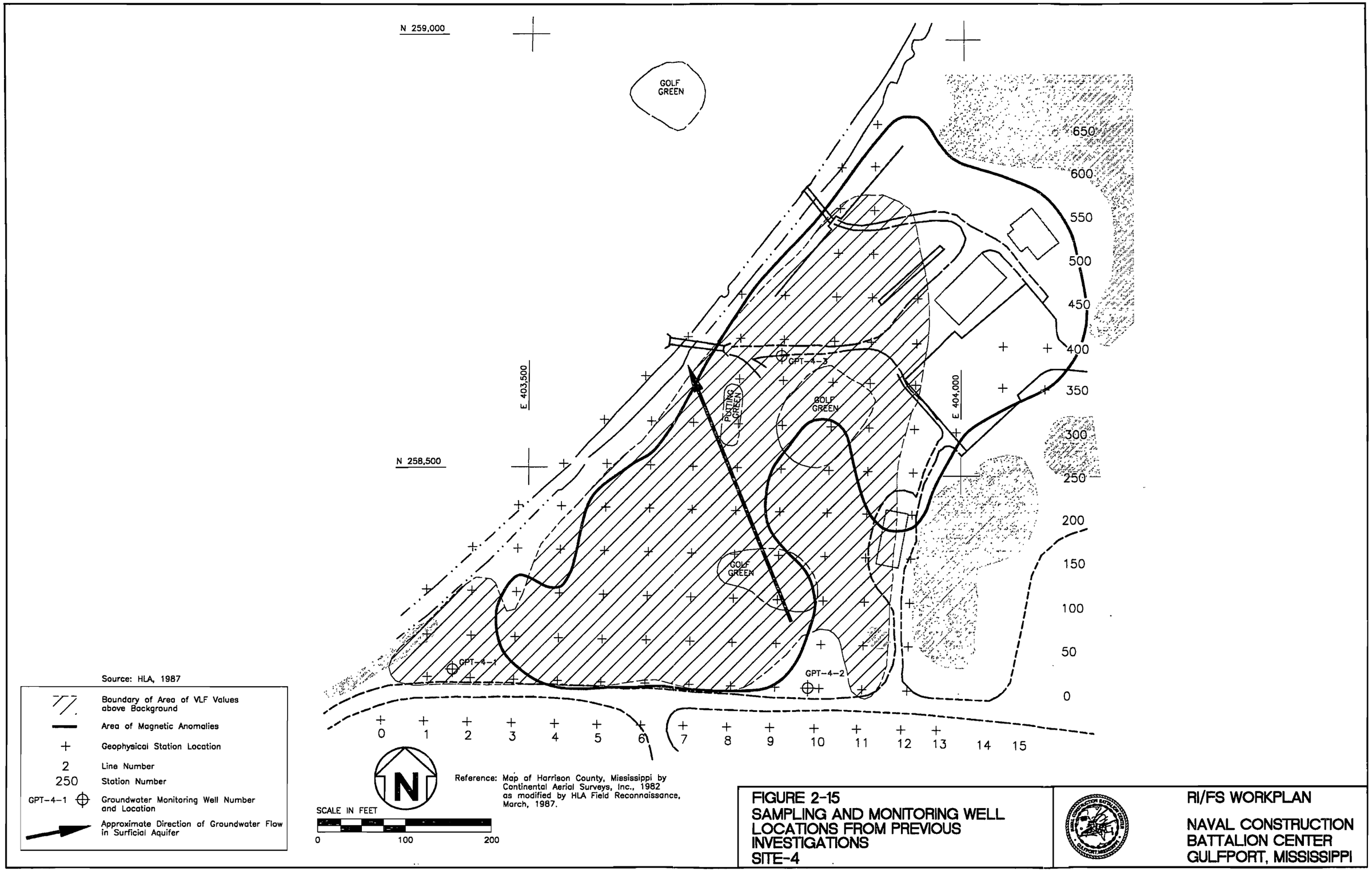

FIGURE 2-15
SAMPLING AND MONITORING WELL LOCATIONS FROM PREVIOUS INVESTIGATIONS
SITE-4

RI/FS WORKPLAN

NAVAL CONSTRUCTION BATTALION CENTER
GULFPORT, MISSISSIPPI

Water-level data indicated that the site-specific direction of groundwater flow (northwest) is different than the regional flow direction (south) that HLA originally presumed. Because of this, wells GPT-4-1 and GPT-4-2 are upgradient rather than downgradient. Analytical results of the groundwater, surface water, and sediment samples indicated that all the samples were relatively consistent. However, elevated concentrations of total organic carbon (TOC) and chemical oxygen demand (COD) were detected in sediment sample SD4-1. Lead and chromium were detected in groundwater samples at levels ranging from 5.4 to 124 μg/l and 22 to 155 μg/l, respectively. No VOC, SVOC, pesticides, or PCBs were detected in groundwater samples. Analytical results of the groundwater, surface water, and sediment samples are listed in Table 2-11.

2.5.2.5 Site 5, Heavy Equipment Training Area Landfill Three soil borings (GPT-5-1, GPT-5-2, and GPT-5-3) were drilled at Site 5 (Figure 2-16) to total depths ranging from 19 to 24 feet BLS. Monitoring wells were installed in all three soil borings. Surface water (SW5-1) and sediment (SD5-1) samples were collected from a drainage ditch south of the site between GPT-5-1 and GPT-5-2. No surface or subsurface soil samples were collected from the site. Table 2-5 summarizes analyses, methods, and detection limits for the Verification Study samples.

A geophysical study was conducted using a Scintrex-IGS™. A 50-foot by 50-foot grid was established extending approximately 950 feet in the east-to-west direction and up to 850 north of the baseline. A large concentration of magnetic anomalies was observed in the southern half of the site. Areas of magnetic anomalies and VLF values detected above background are shown on Figure 2-16.

Water-level data indicated the site-specific groundwater flow direction in the surficial aquifer generally flows towards the west, different than the regional flow direction (south) originally presumed. Therefore, GPT-5-1 and GPT-5-2 are upgradient instead of downgradient. The results of the sediment, surface water, and groundwater samples were consistent with background levels; however, elevated concentrations of TOC and COD were observed in sediment sample SD5-1. Groundwater samples contained lead and chromium at levels ranging from 35 to 48 μg/l and 79 to 104 μg/l, respectively. No VOC, SVOC, pesticides, or PCBs were detected in the groundwater samples. Analytical results are summarized in Table 2-12.

2.5.2.6 Site 6, Fire-Fighting Training Area Figure 2-17 shows sampling and monitoring well locations for the Verification Study. The following paragraphs summarize activities of the Verification Study.

Three borings were drilled at the site, two (GPT-6-1 and GPT-6-2) along the southern edge of the site and one (GPT-6-3) along the western edge of Site 6 (see Figure 2-17). Total depth of borings ranged from 23 to 29.5 feet BLS. Monitoring wells were installed in all three borings. One sediment sample (SD6-1) was collected from a drainage ditch located west of the site. Two surface soil samples (SL6-1 and SL6-2) were collected from areas assumed to be downgradient from the two pits.

A geophysical survey using a Scintrex-IGS™ was conducted at these sites. Data were collected from a 50-foot by 50-foot grid system extending 150 feet in the east-to-west direction and approximately 250 feet north of the baseline shown in Figure 2-17. Magnetometer anomalies and VLF values detected above background were observed around Building No. 383 and in the eastern half and southwestern part of the site. The locations of the magnetic anomalies and elevated VLF values are shown in Figure 2-17.

Table 2-11 Summary of Chemical Analysis Results, Site 4 RI/FS Workplan NCBC Gulfport Gulfport, Mississippi

Location	GPT-4-1	GPT-4-2	GPT-4-3	SW4-1	SD4-1
Sampling Date	3/29/87	3/29/81	4/7/87	4/7/87	4/7/87
Temperature	16	16	20	20	-
pH (field)	5.18	6.36	6.86	7.21	-
Specific conductance (field)	470	330	1600	140	-
pH (laboratory)	5.58	6.75	7.05	6.60	6.31
Specific Conductance (laboratory)	370(370)[3]	210	1600	120	-
Total Organic Carbon (TOC)	-	-	-	7	30,000
Total Organic Halogen (TOX)	-	-	-	60(60)	340
Chemical Oxygen Demand (COD)	-	-	-	20	5,140
oil and grease (O and G)	-	-	-	3.0	442(442)
cadmium (Cd)	<4.7	<4.7	<4.7	<4.7	<4.6
chromium (Cr)	72	22	155	<7.8	19
lead (Pb)	50	5.4	124	<5.0(<5.0)	39
Volatile organics	ND	ND	ND	-	-
Semivolatile organics	ND	ND	ND	-	-
Pesticides and PCBs	ND	ND	ND	-	-

Source: HLA, 1987.

Notes:

All analyses results for water samples are reported µg/l except TOC, COD, and O and G which are reported in mg/l. Analyses results for sediment and soil samples are reported in mg/kg. Temperature, pH, and specific conductance are reported in °C, standard units, and µmhos/cm at 25°C, respectively.

Temperature, pH (field), and specific conductance (field) data for groundwater samples are an average of three separate measurements.

Results presented in parentheses are for duplicate analyses.

- = Sample not analyzed or measured for these parameters.
Cd = cadmium
COD = chemical oxygen demand
Cr = chromium
G = grease
ND = Not detected at or below the reporting unit for all chemical parameters not specifically reported (see table 2-5).
O = oil
Pb = lead
PCB = polychlorinated biphenyl compounds

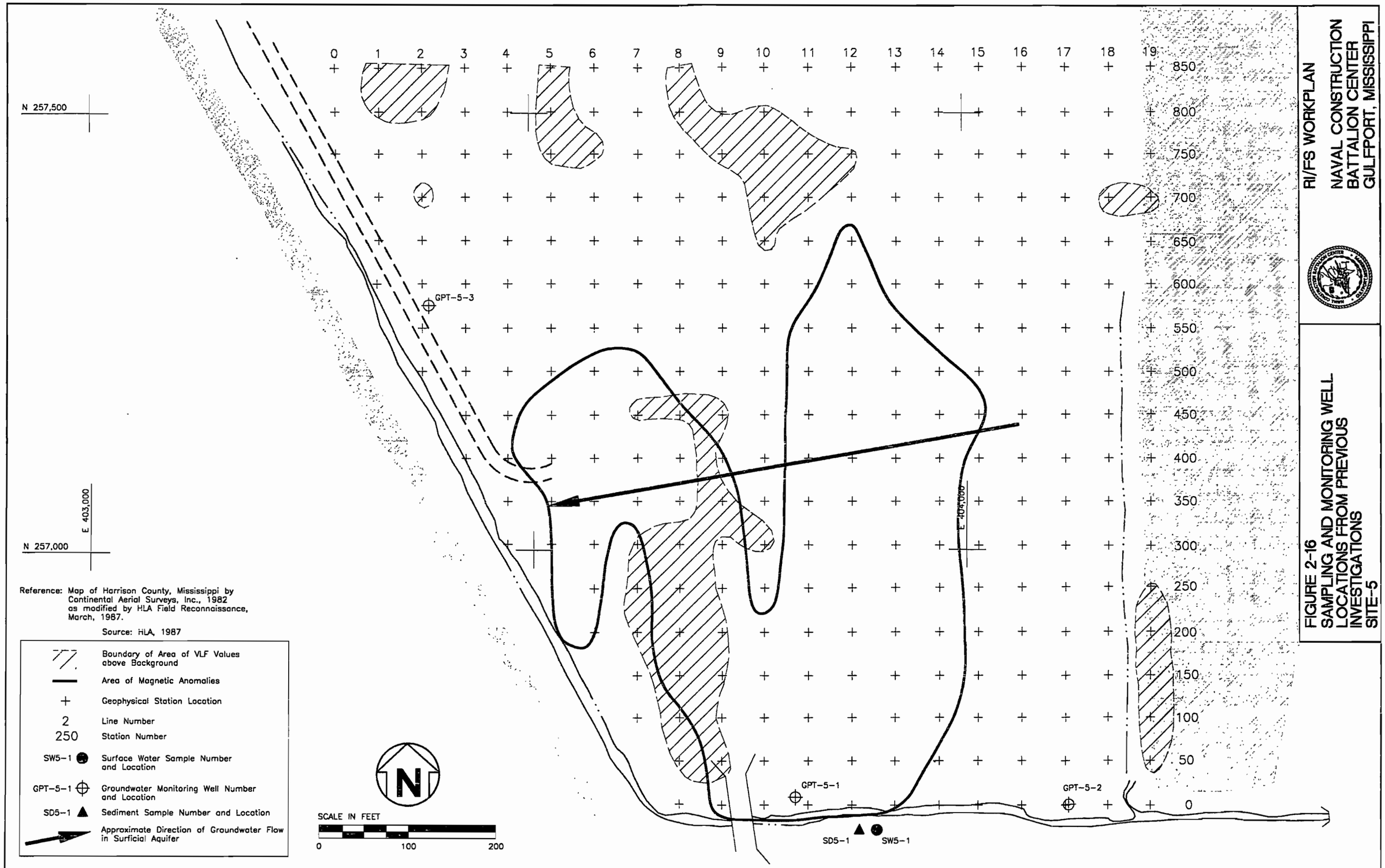
0 1 2 3 4 5 6 7 8 9 10 11 12 13 14 15 16 17 18 19
850
800
750
700
650
600
550
500
450
400
350
300
250
200
150
100
50
0
N 257,500
N 257,000
E 403,000
E 404,000
GPT-5-3
GPT-5-1
GPT-5-2
SD5-1
SW5-1
N
SCALE IN FEET
0
100
200
Reference: Map of Harrison County, Mississippi by Continental Aerial Surveys, Inc., 1982 as modified by HLA Field Reconnaissance, March, 1987.
Source: HLA, 1987
Boundary of Area of VLF Values above Background
Area of Magnetic Anomalies
Geophysical Station Location
2 Line Number
250 Station Number
SW5-1 Surface Water Sample Number and Location
GPT-5-1 Groundwater Monitoring Well Number and Location
SD5-1 Sediment Sample Number and Location
Approximate Direction of Groundwater Flow in Surficial Aquifer
RI/FS WORKPLAN
NAVAL CONSTRUCTION BATTALION CENTER GULFPORT, MISSISSIPPI
FIGURE 2-16
SAMPLING AND MONITORING WELL LOCATIONS FROM PREVIOUS INVESTIGATIONS SITE-5

Table 2-12 Summary of Chemical Analysis Results, Site 5 RI/FS Workplan NCBC Gulfport Gulfport, Mississippi

Location	GPT-5-1	GPT-5-2	GPT-5-3	SW5-1	SD5-1
Sampling Date	3/29/87	3/29/87	3/29/87	4/7/87	3/27/87
Temperature	18	18	16	22	-
pH (field)	5.70	5.16	5.22	6.72	-
Specific conductance (field)	110	800	1200	900	-
pH (laboratory)	6.19	5.66	5.42	6.50	5.12(5.09)
Specific conductance (laboratory)	72	80	100	140	-
Total Organic Carbon (TOC)	-	-	-	6	1,800
Total Organic Halogen (TOX)	-	-	-	327	280(250)
Chemical Oxygen Demand (COD)	-	-	-	<5(<5)	1530(1650)
oil and grease (O and G)	-	-	-	1.3	301(442)
cadmium (Cd)	<4.7	<4.7	<4.7	21	<3.0
chromium (Cr)	79	104	91	<7.8	<5.0
lead (Pb)	39	48	35	<5.0	<3.2
Volatile organics	(1)	(1)	(1)	-	-
semivolatile organics	(1)	(1)	(1)	-	-
Pesticides and PCBs	(1)	(1)	(1)	-	-

Source: HLA, 1987.

Notes:

All analyses results for water samples are reported µg/l except TOC, COD, and O and G which are reported in mg/l. Analyses results for sediment and soil samples are reported in mg/kg. Temperature, pH, and specific conductance are reported in °C, standard units, and µmhos/cm at 25°C, respectively.

Results presented in parentheses are for duplicate analyses.

Temperature, pH (field), and specific conductance (field) data for groundwater samples are an average of three separate measurements.

- = Sample not analyzed or measured for these parameters.
Cd = cadmium
COD = chemical oxygen demand
Cr = chromium
G = grease
ND = Not detected at or below the reporting unit for all chemical parameters not specifically reported (see table 2-5).
O = oil
Pb = lead
PCB = polychlorinated biphenyl compounds

THIS PAGE LEFT INTENTIONALLY BLANK.

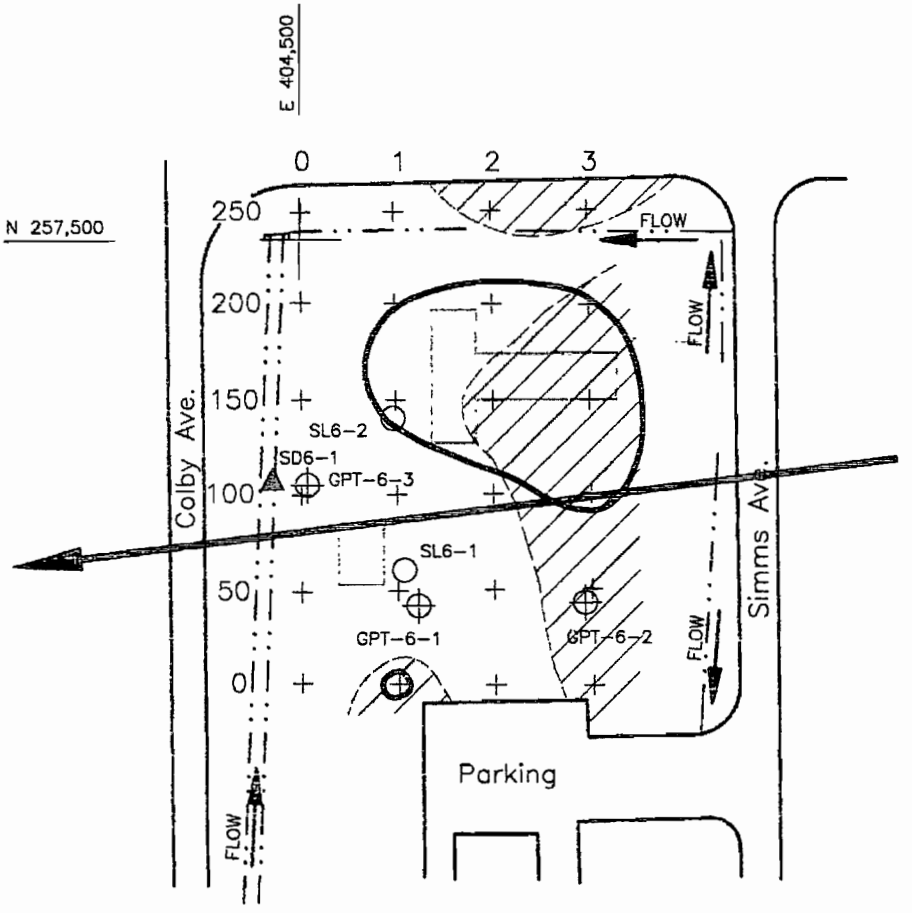

Source: HLA, 1987.

	Boundary of Area of VLF Values above Background
	Area of Magnetic Anomalies
+	Geophysical Station Location
2	Line Number
250	Station Number
SL6-1 ○	Soil Sample Number and Location
GPT-6-1 ⊕	Groundwater Monitoring Well Number and Location
SD6-1 ▲	Sediment Sample Number and Location
	Approximate Direction of Groundwater Flow in Surficial Aquifer

N

Reference: Map of Harrison County, Mississippi by Continental Aerial Surveys, Inc., 1982 as modified by HLA Field Reconnaissance, March, 1987.

SCALE IN FEET

0 100 200

FIGURE 2-17
SAMPLING AND MONITORING WELL LOCATIONS FROM PREVIOUS INVESTIGATIONS
SITE-6

RI/FS WORKPLAN

NAVAL CONSTRUCTION BATTALION CENTER
GULFPORT, MISSISSIPPI

Site-specific water-level data indicated that the hydraulic gradient of the surficial groundwater table slopes to the west. Well GPT-6-2 is upgradient rather than downgradient. Analytical results of the groundwater and sediment samples indicated that all the samples were relatively consistent. Chromium and lead were detected in groundwater samples at levels ranging from 30 to 72 $\mu g/l$ and 21 to 70 $\mu g/l$, respectively. Concentrations of 1,1- and 1,2-dichloroethane were observed in samples from well GPT-6-3 at 2 and 5 $\mu g/l$, respectively. No other volatile organic compounds, and no semivolatile organic compounds, pesticides, or PCBs were detected in groundwater samples. Elevated concentrations of TOC, COD, and oil and grease were detected in soil sample SL6-1. Analytical results of the groundwater, soil, and sediment samples are presented in Table 2-13.

Table 2-13 Summary of Chemical Analysis Results, Site 6 RI/FS Workplan NCBC Gulfport Gulfport, Mississippi

Location	GPT-6-1	GPT-6-2	GPT-6-3	SD6-1	SL6-1	SL6-2
Sampling Date	4/7/87	3/29/87	3/29/87	3/26/87	3/26/87	3/26/87
Temperature	21	18	19	-	-	-
pH (field)	4.91	4.94	4.85	-	-	-
Specific conductance (field)	95	120	1,400	-	-	-
pH (laboratory)	5.23(5.21)	5.44	5.10	5.26	6.95	5.75(5.70)
Specific conductance (laboratory)	80	90	110	-	-	-
Total Organic Carbon (TOC)	-	-	-	5,500	11,800	5,100
Total Organic Halogen (TOX)	-	-	-	<200	210	380(370)
Chemical Oxygen Demand (COD)	-	-	-	3,800	9,450	3,770(3,750)
oil and grease (O and G)	-	-	-	<132	7,248	135
cadimum (Cd)	<4.7	<4.7	<4.7	<3.1	<2.6	<2.6
chromium (Cr)	72	38	30	<5.9	5.4	7.7
lead (Pb)	70	21	26	4.1	<3.3	6.9
Volatile Organics	ND	ND	ND	-	-	-
1,1-Dichloroethane			2[1]			
1,2-Dichloroethane			5			
semivolatile organics	ND	ND	ND	-	-	-
Pesticides and PCBs	ND	ND	ND	-	-	-

Source: HLA, 1987.

[1] Found below detection limit for analytical method.

Notes:

All analyses results for water samples are reported µg/l except TOC, COD, and O and G which are reported in mg/l. Analyses results for sediment and soil samples are reported in mg/kg. Temperature, pH, and specific conductance are reported in °C, standard units, and µmhos/cm at 25°C, respectively.

Temperature, pH (field), and specific conductance (field) data for groundwater samples are an average of three separate measurements.

Results presented in parentheses are for duplicate analyses.

- = Sample not analyzed or measured for these parameters.
Cd = cadmium
COD = chemical oxygen demand
Cr = chromium
G = grease
ND = Not detected at or below the reporting unit for all chemical parameters not specifically reported (see table 2-5).
O = oil
Pb = lead
PCB = polychlorinated biphenyl compounds

3.0 GENERAL DESCRIPTION OF REMEDIAL INVESTIGATION/FEASIBILITY STUDY TASKS

The purpose of the RI/FS at NCBC Gulfport is to characterize the nature and extent of contamination at the seven sites to the degree necessary to allow for an informed risk-management decision on the remedial alternatives that will satisfy the remedial action objectives. Accordingly, strategies for site investigations are developed, data quality objectives are established, and priorities are assigned according to the importance of the data in meeting the objectives. The following sections include a general description of DQOs and the investigative methods that will be used to characterize the NCBC Gulfport sites. More detailed descriptions such as number, types, and locations of samples and the level of quality control to be exercised during the investigations are included in the QAPP part of Volume II, the SAP.

If groundwater or surface water contamination is not judged to be an immediate threat, delineation of the complete extent of groundwater and surface water contamination may be performed on a larger scale, after source data on several sites have been gathered. This allows delineation on a larger scale by viewing local aquifer and surface water systems as an individual operable unit(s) that may be impacted by several sites simultaneously.

If initial data evaluation at any site shows groundwater or surface water contamination to be an immediate threat to human health or the environment, interim or early remedial actions may be performed to mitigate further transport from the site.

In this process, data are continually assessed and sites are evaluated to determine: (1) if contamination is present, (2) if it presents a threat, (3) if it has been delineated, and, finally, (4) what further action is needed (i.e., delineation, interim or early remedial actions, or evaluation of remedial alternatives). The process eliminates lengthy interim report development and review times by allowing continual data assessment and rapid decision making.

3.1 DATA QUALITY OBJECTIVES. The intended use of data and the required DQOs are best defined during the planning stages to ensure that collection, decontamination, containerization, shipping, and analytical methods are consistent with the degree of confidence required of the resultant data. The following sections provide a brief description of U.S. Environmental Protection Agency (USEPA) DQO levels and identifies the levels associated with each RI/FS field task.

3.1.1 DQOs, General Description DQOs refer to standards for analytical precision, accuracy, representativeness, completeness, and comparability (PARCC). Five DQO levels have been defined by the USEPA: Level I, Field Screening; Level II, Field Analysis; Level III, Laboratory Analysis; Level IV, Contract Laboratory Program-Routine Analytical Services (CLP-RAS); and Level V, Nonconventional Parameter Analysis (USEPA, 1987).

The Naval Energy and Environmental Support Activity (NEESA) has adopted three of these levels as QA requirements; Levels C, D, and E, which correspond with USEPA Levels III, IV, and V (NEESA, 1988). For the purposes of this document, the USEPA nomenclature (Levels I through V) will be used.

The DQO level needed for a specific task is generally based on the intended use of the data and on the limitations of the analytical instrumentation. Many field screening and field analytical techniques are intended to provide a rapid turn-around time and qualitative data for decision making in the field. Field techniques necessarily involve rugged instrumentation with less sample preparation and rapid analysis. More precise and accurate analytical methods are used when both qualitative and quantitative data are needed, such as to support site characterization, confirmation, enforcement, treatability, and/or remedial action. The five broad categories of data quality used in the RI/FS process are described below.

Level I, Field Screening Field screening provides rapid real-time results that can be used to determine optimal placement of sampling locations and for health and safety support. Data that are generated provide information concerning the presence or absence of certain constituents or groups of constituents. The data are generally qualitative rather than quantitative.

Level I sampling requirements include the use of equipment and sampling containers that are clean (soap and tap water), visibly free of contamination, and free of analytes detectable by the screening method employed (USEPA, 1987).

Level II, Field Analysis Field analysis includes the use of more sophisticated analytical instruments in the field, including on-site gas chromatographs (GCs) and mobile laboratories. The data that are generated may be both qualitative and quantitative, but the degree of QA/QC achievable may be more variable than with laboratory analysis.

Level II sampling and equipment requirements include the use of sampling equipment constructed of material that is compatible with the parameters being analyzed (e.g., polyvinyl chloride [PVC] for inorganic parameter analyses, or chrome plated material for organic parameter analyses) and field cleaning procedures that include a potable water and soap scrub followed by a potable water rinse (or steam cleaning or high pressure washing).

The use of potable water is limited only by the parameters being analyzed for and the minimum quantitation limits of the analytical method; water containing up to one half the minimum quantitation limit of the parameters of concern may be used. A minimum of 5 percent of samples collected for DQO Level II analysis should be split for DQO Level IV analysis. Level IV DQOs may not be attainable for analyses other than those performed using USEPA Contract Laboratory Program (CLP) methods. These samples must be representative of all samples analyzed in the field (USEPA, 1991c).

Level III, Laboratory Analysis Laboratory analytical data are generated using USEPA-approved methods to achieve a level of confidence set by specified QA/QC protocols. Level III DQOs are appropriate for data that are collected for most activities including site characterization (i.e., qualitative and quantitative identification of contaminants and contaminant source(s) and extent of migration) and treatability studies. This level corresponds to NEESA Level C.

Level III field methods, decontamination procedures, and sampling equipment construction materials are as specified in the *USEPA Standard Operating Procedures and Quality Assurance Manual* (USEPA Standard Operating Procedures [SOPs] [USEPA, 1991c]). Cleaning of down-hole drilling or excavation equipment must be performed as with Level IV requirements with the exclusion of the

deionized water rinse, the double rinse with pesticide-grade isopropanol, and the rinse with organic-free water. All other cleaning and decontamination guidance must be followed.

When wells are constructed using materials that are not inert with respect to the contaminants being analyzed, data that are collected from those wells are DQO Level III or lower for those incompatible analytes, even if DQO Level IV analytical procedures are used.

Level III QA/QC sampling blank requirements include:

- a minimum of one equipment rinsate blank per week for each week sampling equipment is field cleaned,
- if samples are preserved, a preservative blank must be collected and analyzed at the beginning and end of the study, and
- a blank of the rinse water must be collected and analyzed prior to beginning the study and at the end of each week that sampling equipment is field cleaned.

A minimum of 5 percent of samples collected for DQO Level III analysis using CLP methods should be split for DQO Level IV analysis. These samples must be representative of all samples submitted for Level III analysis (USEPA, 1991c). Level IV DQOs may not be acheivable for analyses that are other than CLP.

Level IV, CLP Level IV DQOs are the most stringent and are defined as data collected in accordance with USEPA SOPs (USEPA, 1991c) and analyzed in accordance with the USEPA CLP (USEPA, 1991a; 1991b). Data that are collected for characterization and confirmation during an RI/FS, during remedial action, for compliance monitoring, or for enforcement often require Level IV for DQOs. This level corresponds to NEESA Level D.

Level V, Nonconventional Parameter Analysis Individual site or remedial design characteristics may require the analysis of contaminants or conditions for which USEPA-approved methods do not exist; these fall into the category of non-conventional parameter analyses. The Level V DQOs associated with these types of analyses must, by definition, be defined on an individual basis. The DQOs identified will be dependent on the specific collection method, decontamination procedures, and analyses to be used. This level corresponds with NEESA Level E.

3.1.2 Task Specific DQOs Tasks for the RI/FS at NCBC Gulfport will involve data collection with DQOs ranging from Level I through Level IV. The following discusses the primary RI/FS tasks for NCBC Gulfport and the associated DQO level.

- **Geophysical Survey, Level I:** Magnetometer, terrain conductivity, and ground-penetrating radar (GPR) surveys will be used to define the perimeter of disposal areas. Data that are generated as a result of the surveys will indicate the presence or absence of subsurface objects (e.g., drums or refuse) and structures. Terrain conductivity data can also provide qualitative information regarding high concentrations of conductive or nonconductive constituents in shallow groundwater. Data requirements are primarily qualitative.

- **Soil Sample Screening, Level I:** Split-spoon samples from discrete depths in soil borings will be screened in the field with an organic vapor analyzer (OVA), providing Level I data concerning the presence or absence of volatile compounds.

- **Soil and Groundwater Sample Screening, Level II:** TerraProbe soil sampling will be conducted at Site 6 and field GC analyses will be performed. Field GC analyses will also be performed on groundwater samples collected from new and existing monitoring wells. The Level II data for soil samples will be used to assist in placement of soil borings. The Level II groundwater data will be used to screen samples for volatile organic contamination to allow field decisions regarding the need for additional monitoring wells at any of the seven sites.

- **Air Quality Monitoring, Level I:** For health and safety purposes, air quality will be monitored in the breathing zone by OVA and/or by photoionization detector (PID), providing Level I data concerning the presence or absence of volatile compounds.

- **Field Parameter Analysis, Level I and Level II:** Field measurements of surface water and groundwater temperature, pH, and specific conductance will be performed to screen samples for laboratory analysis and to determine aquifer stabilization during well purging. These measurements are both quantitative and qualitative, and the data that are generated can conform with both Level I and II DQOs.

- **Characterization and Confirmation Sampling, Level IV:** Groundwater and soil samples that are collected from monitoring wells and split-spoon soil sampling, respectively, and all surface water and sediment samples that are collected during the RI field program will be collected and analyzed in conformance with Level IV DQOs and CLP methods.

- **Treatability Studies, Level III:** Samples that are collected to evaluate the effectiveness and feasibility of selected remedial alternatives will be analyzed in conformance with Level III DQOs. A minimum of 5 percent of these samples will be split for Level IV DQO analysis.

- **Remedial Monitoring and Confirmation Sampling, Level IV:** Samples that are collected to confirm the input and output of treatment methods and samples that are collected to confirm the effectiveness of remedial actions will be analyzed in conformance with Level IV DQOs.

These RI/FS data will be used, as applicable, for health and safety monitoring, site characterization, public health and ecological risk assessment, evaluating remedial alternatives, treatability studies, remedial action, and monitoring.

<u>3.1.3 Precision, Accuracy, Representativeness, Completeness, and Comparability Definition</u> Parameters used within the data validation process to evaluate data quality include measurements of PARCC. The achievable limits for these parameters vary with the DQO level of the data. The limits used for CLP analytical data in this RI program will be those set by the CLP for Level IV

DQOs. These parameters are defined here and methods of calculation are discussed in Section 3.6.2.

Precision and Accuracy Precision, the ability to replicate a value, and accuracy, the ability to obtain a true value, are addressed for all generated data. Precision and accuracy requirements vary depending on intended data uses and are selected in accordance with project requirements. The DQOs for precision and accuracy are established for each major parameter to be measured at the site based on knowledge of the capabilities of available measurement systems and the detection limits required.

Representativeness Representativeness expresses the degree to which sample data depict an existing environmental condition. Representativeness is accomplished through proper selection of sampling locations and sampling techniques and collection of a sufficient number of samples.

The sampling locations in this RI will be chosen in a biased approach based on previous analytical data, screening data collected in the field, and apparent and measured flow directions. Sampling and analytical protocols will be chosen so that measurements of samples will be as representative of the media and conditions being measured as possible.

Sample collection, handling, and documentation will be performed in accordance with USEPA Region IV SOPs (USEPA, 1991c) to ensure that collection and handling techniques do not alter the sample and to provide an adequate tracking mechanism from the time of collection through laboratory analysis.

Completeness The characteristic of completeness is a measure of the amount of valid data obtained compared to the amount of data originally intended to be obtained. The completeness goal for DQO Levels III and IV has been chosen as 80 percent, which is consistent with CLP requirements of 80 to 85 percent.

Field activities performed at DQO Levels I and II are on-site measurement techniques that provide information in real-time or after minimal delay. The completeness achieved for these methods may be more variable than those for standard analytical methods. A higher degree of completeness may be achieved because measurements can be readily repeated; however, site conditions may constrain the use of some techniques, resulting in fewer valid analyses than anticipated.

The sampling objectives that are described in these planning documents allow for a sufficient number of samples to accomplish the project objectives; however, the number of samples presented are estimates that may be revised based on screening data that are collected in the field. Examples of circumstances that may cause variations might include increasing or decreasing the number of samples needed for adequate delineation or characterization, increasing or decreasing the number of samples required for characterization of investigation-derived waste, and/or decreasing the number of screening samples if site conditions constrain the use of a particular method.

Comparability The characteristic of comparability reflects the confidence with which one data set can be compared with other measurements and the expression of results consistent with other organizations reporting similar data. This will be accomplished through the use of standard techniques for sample collection and analysis and the reporting of results in appropriate units. Comparability of

analytical procedures also implies using analytical methodologies that produce results that are comparable in terms of precision, accuracy, and effective range of calibration.

3.2 PRELIMINARY ACTIVITIES.

3.2.1 Subcontractor Coordination Upon receipt of notice to proceed, ABB-ES will contact all appropriate subcontractors to finalize any remaining contractual matters and plan the mobilization and related activities associated with fieldwork for each site. Coordination activities include: scheduling, staffing, and procurement of all personnel, materials, equipment, and supplies required to complete the proposed work. Such subcontractors may include drillers, land surveyors, explosive ordnance location and disposal specialists, and analytical laboratories. Laboratory approval is required on a project-specific basis. The approval process requires approximately 2 weeks. It is the responsibility of ABB-ES to initiate the approval process through the Engineer-in-Charge (EIC).

3.2.2 Permitting, Authorization, and Site Access In conjunction with subcontractor scheduling, ABB-ES will ensure that the necessary authorization and approval is secured for all personnel scheduled for field activities. The Environmental Coordinator at NCBC Gulfport will be contacted to arrange authorization of the appropriate contractor identification badges for both ABB-ES and subcontractor personnel. Such badges will permit authorized personnel to enter specified areas on the NCBC Gulfport facility for the purpose of completing approved fieldwork. The ABB-ES will ensure that all necessary permits (e.g., drilling, monitoring well installation, and excavation permits) have been obtained through the Environmental Coordinator or appropriate State agencies prior to mobilization for fieldwork. Additionally, the COE and the MDEQ will be contacted concerning wetlands at sites where work will be performed to notify them of remedial investigation activities.

3.2.3 Utility Identification and Location Prior to mobilization for fieldwork, ABB-ES will coordinate with NCBC Gulfport personnel to identify and locate all underground utilities and other underground structures, as well as overhead utilities at each site that may obstruct field activities. Upon mobilization to the field, ABB-ES will work with base personnel to mark each utility for future reference, to minimize the risk of jeopardizing the health and safety of field personnel or the integrity of the utility. Identification and location of utilities may include referring to blueprints and using electronic equipment, such as GPR, in the field for physical location of utility lines. NCBC Gulfport will assume final responsibility for the location and identification of utilities or other subsurface structures.

3.3 COMMUNITY RELATIONS. NCBC Gulfport will be responsible for conducting a community relations program consistent with USEPA guidance and perceived community needs. The community relations program will promote community awareness through fact sheets, public meetings, and/or news releases. The program will solicit community input during the decision-making process through Technical Review Committee (TRC) meetings and public review of primary documents. The ABB-ES will provide technical support to Naval personnel in conducting the community relations program.

3.4 GENERAL DESCRIPTION OF FIELD INVESTIGATIVE TASKS. The purpose of the RI/FS field program is: to collect sufficient data to characterize and quantify the extent of contamination, to assess potential risks to human health and the

environment posed by contaminants of concern, to support an FS at sites where remedial action is warranted, and to support an Record of Decision (ROD) at all sites.

The investigative methods that will be used to collect RI/FS data are briefly discussed in this section. A more detailed discussion of each method, including decontamination and waste disposal procedures, is presented in Section 3.0 of the SAP. Details concerning site-specific investigation and sampling activities are discussed in Section 4.0 of this report. QA/QC procedures are detailed in Section 4.0 of the SAP.

3.4.1 Exploratory Geophysics Program Geophysical techniques that will be used at NCBC Gulfport include magnetometry, terrain conductivity, and GPR. These techniques will be used in an attempt to define the horizontal and vertical extent of waste-disposal trenches, to identify buried metallic objects, to identify areas of disturbed or previously excavated soil, and to locate utilities and lines. Each technique is briefly described below.

Magnetometers measure small variations in the earth's magnetic field due to changes in soil composition and stratigraphy. A magnetometer survey can be used to screen for the presence of buried ferrous materials (such as 55-gallon containers and abandoned tanks) and to define the edge of landfills where there is sufficient ferrous debris to show a contrast with natural terrain. Metal detectors can be used for smaller-scale surveys to locate buried metal or utilities.

Terrain conductivity refers to the relative ability of the earth to conduct electricity. Terrain conductivity can be measured using electromagnetic ground conductivity meters. As some types of leachate can alter the electrical properties of soil pore waters and groundwater, this technique can be useful in tracing ionic fractions of leachate plumes. In addition (by measuring the in-phase response) the instruments can detect buried metallic objects and can profile some changes in soil composition. These features can provide data for determining the limits of waste-disposal areas or landfills. Both the magnetometry and terrain conductivity instruments are sensitive to metal objects; therefore, on-site fences, pipes, and power lines may cause interference. For areas where interferences may occur, GPR may be used to define potential waste-disposal areas and buried objects.

The GPR technique uses high frequency radio waves to determine the presence of subsurface objects and structures. GPR can be used to delineate the vertical and horizontal boundaries of trenches and other excavated or disturbed areas. GPR can also be used before drilling at selected locations to screen for possible underground utility or fuel distribution lines or subsurface structures that could interfere with proposed field investigations.

3.4.2 Subsurface Exploration and Sampling The stratigraphy and distribution of contaminants in soils at NCBC Gulfport will be evaluated through soil borings and TerraProbe sampling with soil samples collected from estimated depth intervals ranging from 0 to 50 feet.

3.4.2.1 TerraProbe Soil Sampling Shallow subsurface soils at Site 6 will be sampled using the TerraProbe system. The samples will be analyzed using a field GC and infrared spectroscopy analyses and Level II DQOs. The Level II data will

be used to assist in optimizing placement of soil borings and monitoring well installations.

The TerraProbe system is comprised of a self-contained, hydraulically operated earth probe capable of collecting discrete vapor, soil, and water samples from the subsurface. As indicated above, the TerraProbe will be used at Site 6 for collection of shallow subsurface soils. The TerraProbe is cost-effective and quickly obtains soil samples that can be analyzed on-site, yielding real-time analytical data for immediate interpretation. A more detailed description of the TerraProbe system is found in Section 2.2.2 of the SAP.

3.4.2.2 Soil Borings Soil borings will be drilled using hollow-stem auger and split-spoon sampling techniques in areas where confirmatory soil sampling is needed and where exploration depths exceed 5 feet. If conditions are encountered where the hollow-stem auger method cannot be used (i.e., hard bedrock or caving sands), other investigative techniques, such as solid-stem auger, water rotary, and air rotary, may be used. If water rotary methods are used, potable water, which has been analyzed for contaminants of concern, will be used. The borings will be sampled continuously to the water table and at 5-foot intervals thereafter. Air quality in the breathing zone will be monitored using a PID or OVA during borehole advancement.

Soil samples will be logged by ABB-ES field personnel. The soils will be classified using the Unified Soil Classification System (USCS). Soil borings will be used to obtain characterization and confirmation samples for laboratory analysis. Soil samples will be collected and analyzed in accordance with Level IV DQOs. In general, samples collected for laboratory analysis will be selected based on previous field screening results, field monitoring results (i.e., elevated PID, OVA, or GC readings), visual examination, and/or at pre-designated depth intervals. With the exception of Site 6, soil boring locations will correspond with monitoring well installations. At Site 6, soil borings not used for monitoring well installation will be grouted to ground surface using a bentonite-cement mixture by tremie method.

The data that are collected during the RI need to characterize and delineate areas of contaminated soils. Delineation, by nature, requires that samples be collected from both contaminated and uncontaminated intervals of soil borings. During the process of selecting soil samples from soil borings using OVA headspace readings, the responsible party selecting the samples for laboratory analysis must give thought to selecting some samples for characterization of contaminated areas for purposes of obtaining laboratory analytical data that confirm the vertical extent of contamination. The field team performing the OVA headspace analyses and selecting subsurface soil samples for laboratory analysis must also consider that the OVA has a detection limit an order of magnitude higher than the laboratory analysis and that the OVA will not detect all VOCs and is not sensitive to SVOCs, pesticides, PCBs, or metals. The OVA detects organic vapors that are present at concentrations on the order of 1 mg/kg, whereas laboratory analysis of volatile organic compounds is capable of detecting concentrations as low as 1 μg/kg. Delineation of the vertical extent of contamination does not necessarily require samples that are nondetectable for all COPCs, but should provide an approximation, at minimum, of the depth at which contamination is no longer present. Identification of the types and concentrations of COPCs (characterization) in soil and the horizontal and vertical extent of the presence of COPCs (delineation) are both used to support the development of human and ecological risk assessments and remedial

alternatives. Risk analysis and selection of remedial measures are the end result of the entire investigation process.

3.4.2.3 Surface Soil Sampling Hand augers or similar devices will be used to collect shallow soil samples from 0 to 1 foot for laboratory analysis on all sites. Devices will be decontaminated prior to use and between each sampling location. The soil samples will be logged by field personnel using the USCS.

3.4.3 Monitoring Well Installation Groundwater monitoring wells will be installed to provide groundwater samples in accordance with Level IV DQOs for CLP laboratory analysis, to monitor groundwater elevations, and to perform in situ aquifer hydraulic conductivity tests. The monitoring well depths and screened intervals will depend on site-specific data objectives. In general, wells will be installed for confirmation sampling in the surficial aquifer. At each site, one boring of each well pair will be drilled into the clay layer underlying the surficial aquifer. Split-spoon soil samples will be screened in the field using an OVA, and subsequently in the laboratory for confirmation purposes. Based on field screening and laboratory results, drilling into the first confined aquifer may be required, at which time up to four monitoring wells will be installed. These wells will be installed along the periphery of the source areas suspected of contributing contaminants, which will be monitored collectively. Well screens will be placed at depths designed to intercept suspected site-specific contaminants.

Monitoring wells will be constructed of 4-inch, schedule 40, threaded, flush-jointed PVC pipe with PVC screen and riser (Appendix B). Ten-foot well screens with slotting appropriate for the representative formation will be used to construct all wells. The use of 5-foot screens may be necessary in some instances to avoid overlap of screened intervals in a well pair. Monitoring wells will be constructed and installed in accordance with USEPA SOPs (Appendix C) and SOUTHNAVFACENGCOM Guidelines For Groundwater Monitoring Well Installation (Appendix D). The annular space around all well screens will be backfilled with a clean silica sand, compatible with the screen slot size, from a minimum of 2 feet below the bottom of the well screen to 3 feet above the top of the screen (depending on depth BLS). A minimum 2-foot (if possible, depending on depth BLS) bentonite pellet seal will be installed above the sandpack. A cement-bentonite grout will be tremied from the bentonite seal to within 2 feet of the ground surface. A cement plug and surface pad will complete the well to ground surface. The well will be developed prior to sampling (after a minimum of 24 hours grout set time) to remove fines, improve the hydraulic connection with natural soils, and to obtain a representative sample.

Monitoring wells will be developed using an air-activated (pneumatic) surge pump, gasoline-powered diaphragm pump, or both. No air or water will be injected into the wells during development. Wells will generally be purged of at least three well volumes, until the water is clear and free of silts, and/or until field measurements of pH, temperature, and conductivity have stabilized.

Monitoring wells will either be flush-mounted with protective steel casing at ground surface or will have aboveground protective casings to protect the well riser. Aboveground wells in high traffic areas will be surrounded by four protective steel posts. Protective steel casings will be equipped with locking covers. A concrete seal and concrete pad will be placed from the top of the grout to the ground surface around each protective casing to secure the casing,

prevent surface runoff from entering the borehole, and to direct runoff away from the casing. The aboveground parts of both the well riser and protective casing will be vented. The protective casing will have two weep holes near ground level to allow water to drain from inside the casing. Wells will be permanently and properly identified as specified in SOUTHNAVFACENGCOM guidance (Appendix D).

3.4.4 Groundwater Sampling This section briefly describes groundwater sampling from monitoring wells and potable wells. Where possible, sampling of wells will proceed from the upgradient (background) wells to the downgradient (or potentially contaminated) wells. Wells with free product will not be sampled for trace chemical analyses unless necessitated by special circumstances or client request. The sampling locations will be recorded in the field logbook and indicated on a site map.

Wells will be purged of a minimum of three well volumes prior to sampling and/or until clarity, pH, temperature, and conductivity have stabilized. Field measurements of pH, temperature, and conductivity will be recorded. Groundwater samples will be collected for laboratory analysis using stainless-steel or Teflon™ bailers and clean nylon or monofilament line. Samples from relatively deep wells may require the use of a sampling pump.

3.4.5 Surface Water and Sediment Sampling Surface water and sediment samples will be collected from selected surface water drainage features to assess potential contaminant migration from the sites through groundwater-surface water interaction, surface water runoff, or soil erosion. Both upgradient and downgradient samples will be collected from each site to distinguish potential source areas.

Based on observed flows and shallow depths of water at the designated sampling locations, most water samples will be collected by direct immersion of sample bottles. If water depths of 2 feet or more are encountered, the samples will be collected using a discrete stainless-steel water sampler at approximately mid-depth levels in the water column by direct immersion of sample bottles. Care will be taken to avoid stirring up sediments that would contaminate the water sample. Field measurements of surface water pH, temperature, and conductivity will be recorded for each sampling location. Sediment samples will be collected using either a gravity corer or stainless-steel trowel, depending on the bottom type and overlying water depth.

3.4.6 Aquifer Characterization Hydraulic conductivity testing (slug tests) will be performed on selected monitoring wells representative of each sampling interval. Hydraulic conductivity measurements can be useful for calculating estimated groundwater flow parameters, for evaluating the heterogeneity of the aquifer, for identifying high permeability zones, and for determining the viability of various remedial options.

Slug tests will be performed in accordance with USEPA Method 9100, Section 3.0, Field Methods (USEPA, 1986). In general, the test consists of the introduction or withdrawal of either a slug of water or a weight (such as a tube filled with sand), and the measurement of the change in water level, or fluid pressure, in the well over time. For the NCBC Gulfport RI/FS, slug tests will be performed using a PVC tube filled with clean silica sand. The slug-test data from unconfined aquifers will be analyzed using a method developed by Bouwer and Rice (1976) for calculating the hydraulic conductivity of an aquifer from partially penetrating wells in an unconfined aquifer. The slug test data from confined

aquifers, if any, will be analyzed using a similar method by Cooper, Bredehoef, and Papadopulos (1967).

Slug tests can be categorized into falling-head and rising- and/or falling-head tests. Falling-head tests are typically performed by introducing a solid 'slug' below the water level and measuring the rate of water level decrease per time until equilibrium conditions are reached (i.e., the rate of recovery). Rising-head tests are performed by withdrawing a solid 'slug' and measuring the rate of recovery. The change in water level with time is measured with an electronic pressure transducer and data logger over specified time intervals. Rising-head tests will be performed on wells that are screened across the water table. Rising- and falling-head tests will be performed on wells that are screened below the water table.

Based on previous site investigations, contamination of the aquifer is not expected. More extensive tests (e.g., pumping tests or step drawdown tests), therefore, are not warranted at this time to evaluate hydrologic properties of the aquifer. More extensive aquifer tests will be designed when conditions are identified that warrant such an activity (i.e., groundwater contamination and the need for treatability studies for groundwater).

3.4.7 Ecological and Public Health Surveys An ecological survey and a public health survey will be conducted to identify potential receptors, to provide data for wetland and floodplain assessments, and to evaluate potential risk assessment exposure pathways. The presence and uses of private wells in the area have been identified. Public water supply is discussed in Section 2.3.6 herein.

3.4.7.1 Ecological Survey The ecological survey will consist of an informal visual identification of terrestrial vegetation cover types (e.g., herbaceous plants, emergents, shrubs, and trees) and terrestrial wildlife (e.g., mammals, reptiles, amphibians, and birds). Local wildlife officials may also be contacted to determine the presence of terrestrial species reported to be in the area or reported to inhabit the types of vegetative cover identified. Additional information may be collected for use in wetlands and floodplains assessments, including identification of soil types and wetland vegetation.

Wetland and Floodplain Evaluation According to the preamble of the National Contingency Plan (NCP) (Code of Federal Regulations, Title 40, Part 300 [40 CFR, Part 300]), CERCLA actions will consider Federal environmental standards such as the Floodplains Management Executive Order 11990; the Clean Water Act (CWA) Section 404(b)(1) Guidelines; and the Office of Emergency and Remedial Response *Policy on Floodplains and Wetlands Assessments for Superfund Sites* (USEPA, 1985b). To evaluate the impact of remedial alternatives on wetlands and floodplains, it is necessary to first identify the location of floodplains and wetlands and then determine wetland functional attributes.

Wetlands on NCBC Gulfport have been identified and mapped (see Figure 2-9). If necessary, additional wetlands and floodplains may be identified using information collected during the ecological survey and a review of available wetland and floodplain mapping of the area. Floodplain Insurance Rate Maps (FIRMs) prepared by the Federal Emergency Management Agency (FEMA) will be used to evaluate the 100-year floodplain boundaries. If available, additional wetlands will be identified using U.S. Fish and Wildlife Survey wetland inventory maps and on-site inspections. Wetland functional attributes may be identified

based on a qualitive evaluation of the ecological survey information and hydrogeology of the area.

3.4.7.2 Public Health Survey A public health survey consisting of an area reconnaissance, interviews, and records search will be conducted by an ABB-ES Public Health Risk-Assessment specialist. The survey will be conducted to examine on-base and off-base communities, activities, and drinking water sources. Information gathered will be used to develop potential exposure pathways to be evaluated in the Baseline Risk Assessment.

3.4.8 Topographic and Water Elevation Survey The existing topographic map of NCBC Gulfport will be used as a base map for additional survey data collection. This base map is available in digitized and hard copy formats.

An elevation and location survey will be performed by a Mississippi-licensed surveyor under contract to ABB-ES to locate all sampling locations including monitoring wells, soil borings, surface soil samples, surface water and sediment samples, and any other necessary control points. The inner casing (riser) for the monitoring wells will be surveyed for both horizontal and vertical control to a minimum degree of accuracy of 0.1 and 0.01 foot, respectively. Other exploration locations will be marked in the field and will be surveyed for horizontal and vertical control to a minimum degree of accuracy of 0.1 foot.

Sampling locations and other control points will be plotted on site-specific base maps and will be available in both digitized and hard copy formats. In addition, the survey data will be organized and reported in accordance with *USEPA Locational Data Policy and Region IV Environmental Monitoring and Data Reporting Requirements* (Appendix E). These documents require the identification of sampling locations in terms of latitude and longitude coordinates in accordance with the Federal Interagency Coordinating Committee for Digital Cartography (FICCDC) recommendations.

3.4.9 Decontamination Procedures In-house cleaning procedures, field cleaning procedures, and containment and disposal of wastewater and solvents will be performed in accordance with USEPA Region IV SOPs (USEPA, 1991c) and are detailed in Section 2.1.5 of the SAP. This SAP section includes cleaning procedures for: sampling equipment, submersible pumps and hoses, sampling and/or filtering tubing, well sounders and measurement tapes, ice chests and shipping containers, field parameter measurement probes, organic-free water containers, and large equipment. In addition, Section 2.1.5.4 of the SAP includes a detailed description of the decontamination staging area and fluid disposal practices.

3.4.10 Investigation-Derived Wastes This waste-management plan has been prepared in accordance with USEPA Region IV SOPs to address the disposal of contaminated and uncontaminated investigation-derived wastes (IDW) (i.e., soil cuttings and other soil or sediment wastes, purging and development water, wastewater and waste solvents from decontamination activities, personal protective clothing, and other disposable items [including disposable equipment and/or parts]). Investigation-derived purge and development water, decontamination water, and soil cuttings may be disposed on-site within the area of contamination (AOC), if exposure to discharged waste or vapors will not present a known health risk and if the wastes will not be discharged in a manner that would affect surface water bodies.

Decontamination water resulting from washing of drilling equipment in the central decontamination area will be placed in new, 55-gallon, steel drums and staged in an area designated by the Base Environmental Coordinator. The drums will be labeled to indicate the site and borings from which they are derived, dated and contents indicated. Following receipt of laboratory analytical data for environmental samples, the contents of each drum will be evaluated to determine whether the associated environmental samples suggest that a drum may contain a RCRA- or CERCLA-listed or characteristic hazardous waste. If environmental data do suggest a drum may contain a hazardous waste, a sample will be collected from the drum contents and submitted for Toxicity Characteristic Leaching Procedure (TCLP) analysis. The TCLP analysis will be limited to constituents suspected of being present at levels that may cause the waste to be regulated as a RCRA hazardous waste. If the environmental data do not suggest that CERCLA or RCRA listed wastes are present in a drum at levels that would cause it to be regulated as a RCRA hazardous waste, permission to discharge the drum contents to the local Public Owned Treatment Works (POTW) will be sought.

Other IDW associated with the RI includes decontamination water produced from washing groundwater and Terraprobe sampling equipment, monitoring well purge water, and soil cuttings from drilling operations. These materials will be screened with an OVA or PID. If concentrations above background readings are detected, or if visual evidence of contamination is noted, the materials will be placed in 55-gallon drums, labeled and dated, and stored on the site from which it is derived. If concentrations are at or below background readings, the material will be disposed on site within the AOC.

Personal protective equipment and other disposable items will also be screened with an OVA or PID. If OVA or PID screening concentrations are at or below background, these items will be double-bagged in plastic garbage bags and disposed in an NCBC dumpster. If screening concentrations are above background concentrations, contaminated personal protective equipment or other disposable items will be drummed until receipt of laboratory analysis of the associated site matrix. If the associated analytical data do not suggest a drum contains a RCRA- or CERCLA-listed waste or characteristic hazardous waste, the personal protective equipment or other items will be double-bagged in plastic garbage bags and disposed in an NCBC dumpster. If contaminants are detected, these items will be properly disposed as hazardous waste or cleaned and the associated wastewater will be treated as other contaminated wastewaters described above.

Materials that are stored in drums will be staged by field personnel at the respective site and will become the property of NCBC Gulfport. At each site, and at the decontamination area, drums will be staged on pallets and covered with plastic sheeting secured with ropes. Signs will be prominently displayed on the staged material indicating that the drums are not to be moved and providing the name and telephone number of the Base Environmental Coordinator. The ABB-ES will maintain a log of the drums and their contents and will clearly label the containers, on weather-resistant labels, with the drum contents, site and sample location number, date filled, and corresponding log entry number. The ABB-ES personnel or their subcontractor will prepare the staging area and move drums to the staging area located on the site. The staging area location will be coordinated with the Base Environmental Coordinator.

The hazardous materials, if any, will be handled, transported, and treated/ disposed according to ARARs for IDW. The ARARs may include RCRA, CWA, the Toxic Substances Control Act (TSCA), and/or existing State regulations. Upon receipt

of RI analytical data, ABB-ES will evaluate the data and recommend disposal alternatives. If off-site disposal at a permitted hazardous waste disposal facility is a selected alternative, ABB-ES personnel will collect samples to send to each facility for waste approval (as required by each disposal facility). The ABB-ES will prepare mainfest document(s) for the wastes. NCBC Gulfport will be responsible for bidding, subcontracting, signing of manifests, and scheduling transportation and disposal. USEPA guidance and SOP indicate that the standard 90-day, hazardous-waste storage period applied to CERCLA site investigations. Furthermore, if this timeframe cannot be met, no special permits are required. The ABB-ES personnel will work closely with SOUTHNAVFACENGCOM and NCBC Gulfport personnel in the effort to have the hazardous waste, if any, appropriately disposed before the 90-day period expires. The 90-day storage period begins when it is determined that a waste is hazardous. On-site disposal within the AOC will be evaluated as a potential disposal alternative in consideration of site-specific information during the RI. Nonhazardous (noncontaminated) materials will be returned to the site where they originated and disposed on-site or in a dumpster, as appropriate.

3.5 LABORATORY ANALYSIS. Sample analyses range from screening techniques and field analysis to CLP laboratory analyses. This section will discuss the laboratory analytical methods, and associated DQO levels, for the matrices to be sampled during the NCBC Gulfport RI (Table 3-1).

Screening methods will be employed to define high concentration areas and to gain information concerning the horizontal and vertical extent of contamination. TerraProbe samples (Site 6) and groundwater samples (all sites) will be analyzed for selected volatile organic constituents in the field using an on-site mobile laboratory equipped with a GC with an electron capture detector (ECD) and PID.

These analytical results will be evaluated to determine optimal locations for placement of soil borings and monitoring wells (Site 6) and the need for additional monitoring wells (all sites). Because screening analyses are intended only to identify locations for confirmation sampling, the Level II DQO screening samples will not be split for Level IV analysis. Actual confirmation samples will be collected as described in the following paragraph.

Soil, groundwater, surface water (where present), and sediment samples (where present) will be collected from each site for laboratory analysis. Laboratory analyses will be conducted in conformance with the USEPA CLP, except total petroleum hydrocarbons and total dissolved and suspended solids determinations, which will be done according to other USEPA-approved methods as shown in Table 3-1. These analyses are intended to provide confirmatory information concerning the nature and distribution of contamination at a site. All samples for CLP analyses will be analyzed according to Level IV DQOs. Level III DQOs will be used for laboratory analyses that are not included in the CLP. The choice of constituents to be analyzed is based on several factors including: (1) previous analytical results (contaminants detected or contaminants not adequately tested), (2) previous sampling locations (sufficient and representative downgradient locations), and (3) site history (types of wastes disposed). All samples that are collected for laboratory analysis will be analyzed for TCL volatile organics, TCL semivolatile organics, TCL pesticides and PCBs, TAL inorganics, and total petroleum hydrocarbons. Groundwater and surface water samples will be analyzed for total dissolved solids, and total suspended solids, in addition to TAL inorganics. Both filtered and unfiltered water samples will be submitted for TAL

Table 3-1 Laboratory Analytical Program RI/FS Workplan NCBC Gulfport Gulfport, Mississippi

Media	Parameter	Method	Reference	DQO Level
Soils	TCL volatiles	Purge and trap GC/MS	CLP-COP	IV
	TCL semivolatiles	GC/MS	CLP-COP	IV
	TAL inorganics	AAS/PES	CLP-CIP	IV
	TCL pesticide and PCBs	GC/ECD	CLP-COP	IV
	TPH	Infrared	EPA-418.1-M	III
	Selected screening volatiles	GC/ECD/PID	SW846-M	II
Groundwater	TCL volatiles	Purge and trap GC/MS	CLP-COP	IV
	TCL semivolatiles	GC/MS	CLP-COP	IV
	TAL inorganics	AAS/PES	CLP-CIP	IV
	TCL pesticides and PCBs	GC/ECD	CLP-COP	IV
	TPH	Infrared	418.1	III
	Total dissolved solids			
	Total suspended solids	Gravimetric	SM2540C	III
	Selected screening volatiles	Gravimetric	SM2540D	III
		GC/ECD/PID	SW846-M	II
Sediments	TCL volatiles	Purge and trap GC/MS	CLP-COP	IV
	TCL semivolatiles	GC/MS	CLP-COP	IV
	TAL inorganics	AAS/PES	CLP-CIP	IV
	TPH	Infrared	418.1-M	III
	TCL pesticides and PCBs	GC/ECD	CLP-COP	IV
Surface water	TCL volatiles	Purge and trap GC/MS	CLP-COP	IV
	TCL semivolatiles	GC/MS	CLP-COP	IV
	TAL inorganics	AAS/PES	CLP-CIP	IV
	TCL pesticides and PCBs	GC/ECD	CLP-COP	IV
	TPH	Infrared	418.1-M	III
	Total dissolved solids			
	Total suspended solids	Gravimetric	SM2540C	III
		Gravimetric	SM2540D	III

Notes: DQO = data quality objectives
TCL = target compound list
GC/MS = gas chromatograph/mass spectrometry
CLP-COP = Contract Laboratory Program - Caucus Organic Protocol, Control No. 887
AA/PES = Atomic Absorption/Plasma Emission Spectroscopy
CLP-CIP = Contract Laboratory Program - Caucus Inorganic Protocol, Control No. 787
GC/ECD = gas chromatography/electron capture detection
PID = photoionization detector
M = method modified for field screen
PCBs = polychlorinated biphenyls
SM = Standard Methods for the Examination of Water and Wastewater

inorganic analyses. Groundwater and surface water samples will be analyzed for TCL volatile organic compounds using the CLP method for low-level analysis so that detection limits for these compounds will be similar in magnitude to ARARs. Some volatile organics have ARARs below the standard CLP CRQLs.

Standard field methods and equipment decontamination procedures for Level IV DQOs will be followed in accordance with USEPA Region IV SOPs (USEPA, 1991c). Deviations will be documented in the field logbook or in the approved work plan.

Sample handling and documentation are described in the site-specific QAPP, which is incorporated as Section 4.0 of the SAP. The QAPP includes procedures for sample container and preservation requirements, sample labelling, chain-of-custody and sample tracking, and shipping.

3.6 DATA ASSESSMENT. Data that are collected from investigation activities include survey data, field screening data, and laboratory analytical data. The ultimate data uses include site characterization, the assessment of potential risk to human health and the environment, and the development of effective remedial measures, where necessary.

Field screening of the data provide real-time qualitative data and Level II quantitative data. This information is useful for site characterization and for determining strategic sampling locations. Laboratory analytical data provide qualitative and quantitative confirmation data concerning the type, quantity, and distribution of contaminants.

Laboratory data must be validated and assessed to determine the validity of the data and to ensure that DQOs are met. Sample results are validated through comparison to QA/QC data to assure that analytical results fall within acceptable accuracy and precision confidence limits, and to eliminate, correct, or flag matrix and other interference effects. Validated data are summarized and organized into formats that facilitate evaluation. Data evaluation includes site characterization and analysis of contaminants, contaminant distribution, and transport, fate, and risk assessment.

3.6.1 Screening Data Screening data will include results from geophysical surveys (magnetometer, terrain conductivity, and GPR), soil sample screening at discrete depths, air quality monitoring, field parameter (pH, temperature, and specific conductance) measurement, and on-site GC analysis of soil and groundwater samples.

Screening activities allow real-time or rapid analysis of contaminant distribution or of indicator parameters that may correlate with the presence of contamination. Quality control procedures used with qualitative screening instruments (e.g., pH meter, photoionization meter, etc.) include calibration and comparison of results. Analytical QC procedures used with field GC screening include: reference standard calibration, retention-time window control, analytical blanks, field blanks, internal-standard recovery control, logbook documentations, and review of calculated results.

3.6.2 Laboratory Data Validation Upon receipt, analytical data are systematically validated in conformance with USEPA *Functional Guidelines for Evaluating Organic Analyses* (USEPA, 1991g) and *Functional Guidelines for Evaluating Inorganic Analyses* (USEPA, 1991f). These guidelines provide a systematic procedure for evaluating laboratory QA/QC measures such as holding

times, blank analyses, surrogate recoveries, matrix spike results, GC/MS tuning, instrument calibration, compound identification, and method performance.

Validated data will be prepared in three initial formats: raw laboratory data, data marked with validation qualifiers or annotations, and corrected or validated data. The validated data can then be used for site contaminant characterization and assessment.

The PARCC parameters will be evaluated during validation of laboratory analytical results. The acceptance criteria for PARCC parameters for Level III and Level IV DQOs are defined by the CLP guidelines and by the laboratory analytical methods chosen. The CLP contract-required quantitation limits (CRQLs) will be requested for laboratory analyses.

Precision Laboratory analytical precision is a quantitative measurement of reproduceability. Precision is the variability of a group of measurements compared to their average value, monitored and evaluated for this project through comparison of duplicate samples (including matrix spike duplicates).

Precision and reproducibility can be affected by both sample collection and laboratory analytical techniques. For example, volatile organic samples may exhibit variability due to improper collection (airspace in the sample) or to variability in purging or injection times. Duplicate samples, when taken from a homogenized sample, are primarily affected by analytical precision.

Precision is a parameter evaluated during the data validation process. Precision will be calculated as relative percent difference (%RPD) using the formula:

$$\%RPD = \frac{D_1 - D_2}{(D_1 + D_2)/2} \times 100 \qquad (1)$$

where:

%RPD = relative percent difference,
D_1 = first sample value, and
D_2 = duplicate sample value.

Duplicate samples and the comparison between matrix spike and matrix spike duplicate samples, calculated as %RPD, will be used to measure analytical precision. Matrix spike and matrix spike duplicates are also used to measure analytical recovery, or accuracy.

Accuracy Accuracy is the quantitative measurement of the bias of a system, relating a reported sample concentration to its actual value. Analytical accuracy is quantified by calculation of spike recovery. In the laboratory an aliquot of either a surrogate or a specific target compound(s), (i.e., spike) at known concentrations, is added to the sample. The concentration of the recovered spike is compared to the original concentration added and expressed as a percent recovery (%R). This measurement provides an estimate of the percent loss of a given compound during analysis (e.g., loss due to sorption to glassware, volatilization, degradation, etc.). The percent recovery is calculated by the formula:

$$matrix\ spike\ \%\ R = \frac{SSR - SR}{SA} \times 100 \qquad (2)$$

where:

%R = percent recovery,
SSR = spike sample results,
SR = sample results, and
SA = spike added from spiking mix.

The comparison of matrix spike and matrix spike duplicate samples to the original sample, as well as calculation of surrogate recoveries in original samples, will be used to measure accuracy.

Representativeness Representativeness expresses the degree to which sample data depict an existing environmental condition. Representativeness is accomplished through proper selection of sampling locations and sampling techniques and collection of a sufficient number of samples.

The sampling locations in this RI will be chosen in a biased approach based on previous analytical data, screening data collected in the field, and apparent and measured flow directions. Sampling and analytical protocols were chosen so that measurements of samples will be as representative of the media and conditions being measured as possible.

Completeness Percent completeness (%C) is the number of valid measurements collected compared to the number of samples collected for analysis. Valid measurements refer to data validated in conformance with USEPA guidelines (USEPA, 1988; 1991f). It is calculated by the formula:

$$\%C = \frac{N_A}{N_1} \times 100 \qquad (3)$$

where:

%C = percent completeness,
N_A = actual number of valid measurements, and
N_1 = number of samples collected.

The CLP requirements for completeness are 80 to 85 percent. The program goal of 80 percent is consistent with these requirements.

Comparability Comparability is qualitatively measured through an evaluation of the consistency of sample collection, handling, analysis, validation, and reporting. Project activities, from sample collection through reporting, will be conducted consistent with the DQO requirements outlined in USEPA Region IV SOPs (USEPA, 1991c), USEPA CLP requirements, and USEPA data-validation requirements (USEPA, 1988; 1991f).

PARCC Parameters for Level I and II DQOs For Level I and II field measurement data the objective for precision is to achieve and maintain factory equipment specifications. For the pH meter, precision will be tested by multiple readings in the medium of concern. Consecutive readings should agree within ~0.1 standard pH units after the instrument has been field calibrated with standard buffers before each use. The thermometer will be visually inspected prior to each use. The OVA will be calibrated prior to field use. Water-level indicator readings will be precise within ~0.01 foot for duplicate measurements.

As with precision, accuracy of field measurements is achieved through maintenance of equipment in accordance with factory specifications and calibration instructions. For many instruments, accuracy can be assessed through comparison of instrument response to an independent known standard. The pH meter and conductivity meters are calibrated with solutions traceable to the National Bureau of Standards (NBS). A calibration check will be made on all water-level indicators before the initiation of field work. The calibration check will be made using a surveyor's tape or other standard measuring device. If the calibration check is not within ~0.01 foot, the instrument will be returned for service. The OVA will be calibrated prior to shipment to the field. For field GC analyses, the GC will be calibrated with standards for the target analytes according to standard operating procedures a minimum of four times daily.

Field activities performed at DQO Levels I and II are on-site measurement techniques that provide information in real-time or after minimal delay. The completeness achieved for these methods may be more variable than those for standard analytical methods. A higher degree of completeness may be achieved because measurements can be readily repeated. However, site conditions may constrain the use of some techniques, resulting in fewer valid analyses than anticipated.

Comparability of Levels I and II data will be maintained through consistent sample collection, handling, analysis, data evaluation, record keeping, and reporting.

3.6.3 Data Management Plan Sampling locations and laboratory analytical data will be organized and reported in accordance with USEPA Locational Data Policy and Region IV Environmental Monitoring and Data Reporting Requirements (Appendix E). These requirements were developed to provide a standardized reporting system for locating and tracking environmental data.

These policy documents require: (1) the identification of sampling locations in terms of latitude/longitude coordinates in accordance with the FICCDC recommendations, and (2) the development of four databases or data files with electronic copies in American Standard Code for Information Interchange (ASCII) file format.

The four data files include the following.

- **STATION.DAT** This file contains basic information about the type and location of the sampling or monitoring station. Data fields include information concerning the type, location, and elevation of sampling locations.

- **WELL.DAT** This file contains detailed information about the construction and characteristics of groundwater monitoring stations. Data fields include information concerning well location, construction methods, construction materials, development methods, availability of lithologic logs, and the use of the well (i.e., monitoring, drinking water, irrigation, etc.).

- **SAMPLE.DAT** This file contains basic information about the collection and characteristics of samples. Data fields include information concerning station status, field parameter measurements,

water level, wind speed and direction, sample collection methods, and name of sampling agency.

- **PARM.DAT** This file contains measured values and reporting units for specific parameters. Data fields include information concerning sampling station type and unique identifier characters, Chemical Abstract Service (CAS) number of the constituent(s) to be analyzed, the reported analytical result, reporting units, name or code of analytical method, date of analysis, detection limit, and the name of the analytical laboratory.

For USEPA computing purposes, the first line of EACH of the four files MUST contain the following text starting in position one: 19901001. USEPA Region IV *Interchange File Format for Electronic Data Reports* (Appendix E) details specific field names, field lengths, data types, and descriptions for each of the four data files.

Each data file must be updated as new stations or sampling locations are created and/or as new samples are collected. Data will be submitted in ASCII format using 5.25-inch flexible disk or nine-track magnetic tape and as a printed hardcopy.

3.6.4 Data Evaluation Chemical and physical data collected during the RI will be used to characterize the site and to evaluate the potential levels of risk posed to human health and the environment. Physical data (groundwater and surface water elevations and flow, soil composition, hydraulic conductivity, etc.) and chemical data (laboratory analyses and field screening data) will be integrated to form a conceptual overview of the site.

Data will be summarized and plotted on scaled maps to facilitate the analysis of contaminant distribution and potential mechanisms of transport. Chemical data will be compared to ARARs and contaminants of concern will be identified.

Physical and chemical data will be evaluated to determine the distribution of contaminants, contaminant interactions, transport mechanisms, and potential fates. These include evaluations of factors such as: groundwater transport, groundwater surface water interactions, surface water transport, vadose zone transport, volatilization and advection, soil erosion, retardation, degradation, and transformation. The evaluation of the factors listed above will be subject to the availability of sufficient experimental and empirical reference data.

Groundwater, solute transport, geochemical, and/or ecosystem fate and transport modeling may be performed after initial data evaluation. There are currently insufficient data to determine which model(s) may be useful for these sites.

Plausible exposure pathways and exposure scenarios will be evaluated to assess potential levels of risk posed by the contaminants of concern. The risk assessment is based on an evaluation of exposure patterns, available toxicity data, and dose-response relationships.

Ultimately, the data collected will be evaluated to support no further action or remedial action decisions, treatability studies, and remedial design.

3.6.5 Evaluation of Data Gaps All data will be continually assessed and sites will be evaluated to determine: (1) if contamination is present, (2) if it

presents a threat, (3) if it has been delineated, and finally (4) what further action is needed (i.e., delineation, interim or early remedial action, or evaluation of remedial alternatives). The goal is to eliminate lengthy interim report development and review times by allowing continual data assessment and rapid decision making.

Data gaps will be addressed in Project Managers meetings, as described in Section 3.6.6. This approach allows additional data to be collected when they are needed and minimizes reporting, review, and mobilization costs. Where appropriate, data gaps may be addressed by integrating data from several sites and viewing the facility, or sections of the facility, on a larger scale. This should simplify addressing sites with overlapping plumes, surface water systems, and/or complex groundwater systems.

3.6.6 Address Data Gaps The RI/FS process will be tailored to allow prioritization of sites according to potential threat to human health and the environment. The process will initially focus on source identification, with delineation of soil and sediment contamination and confirmation of groundwater and surface water contamination.

Decisions concerning data assessment and actions to be taken will be made during Project Management meetings that will include representatives from the Navy, USEPA, MDEQ, and ABB-ES. These meetings will provide a forum for discussion of investigative results and proposed actions. The verbal decisions made in these meetings may be final with no reporting or review time.

If initial data evaluation shows groundwater or surface water contamination to be an immediate threat to human health or the environment, interim or early remedial actions may be performed to mitigate further transport from the site.

If groundwater or surface water contamination is not judged to be an immediate threat, delineation may be performed at a later time and on a facility-wide or area-wide scale, after source data on several sites have been gathered. This allows delineation on a larger scale by viewing local aquifer and surface water systems as an individual operable unit(s) that may be impacted by several sites simultaneously.

3.7 BASELINE RISK ASSESSMENT. Human health and ecological Baseline Risk Assessments will be conducted for each of the seven sites (Site 1, Disaster Recovery Disposal Area; Site 2, World War II Landfill; Site 3, Northwest Landfill/Burn Pit; Site 4, Golf Course Landfill; Site 5, Heavy Equipment Training Area Landfill; Site 6, Fire-Fighting Training Area; and Site 7, Rubble Disposal Area). Unless a significant difference is found in the nature and degree of contamination of Site 2 and Site 7, these sites may be combined for the Baseline Risk Assessments because of their proximity and similarity. The purpose of the Baseline Risk Assessments is to determine whether contaminants at these sites pose a risk to human and/or ecological receptors. The human-health Risk Assessment will be conducted in accordance with the following USEPA guidance documents: (1) *Risk Assessment Guidance for Superfund (RAGS), Volume 1, Human Health Evaluation Manual (Part A)* (USEPA, 1989b); and (2) *Human Health Evaluation Manual, Supplemental Guidance, Standard Default Exposure Factors* (USEPA, 1991e). Guidance followed in conducting the Ecological Risk Assessments will include the *Risk Assessment Guidance for Superfund; Environmental Evaluation Manual* (USEPA, 1989a).

The Baseline Risk Assessment for the NCBC Gulfport sites will consist of three components: (1) data evaluation and data summarization, (2) human-health risk assessment, and (3) ecological risk assessment. Data evaluation and summarization will be performed to determine which environmental data are suitable for use in the risk assessment and to organize data in a useful format. The human health assessment will be performed to determine if the contamination present at these sites poses significant risks to public health in the absence of any remedial action. The ecological risk assessment will be performed to define potential ecological effects resulting from chemicals in environmental media at each site.

The following sections summarize the approach and principal assumptions proposed for the Baseline Risk Assessments. Proposed site-specific approaches to each component of the risk assessments are presented where appropriate.

3.7.1 Data Evaluation and Summarization Sampling data from each of the seven sites will be evaluated independently to determine (1) which detected chemicals are believed to be site-related, and (2) which data are of sufficient quality for use in a quantitative risk assessment. The individual steps involved in this process are briefly discussed below.

Sort Data By Medium Data from the RI and previous investigations will be compiled and sorted by environmental medium (i.e., soil, groundwater, surface water, sediment, and air). Data that are collected from different sampling events will be combined if the distribution of concentrations are determined to be statistically similar. All chemicals detected in at least one sample in each medium will be identified.

Evaluate the Quality of the Data Based on the results of the data validation the overall quality of the data will be reviewed to determine which data are of sufficient quality for use in quantitative risk assessment. This review will be conducted in accordance with the USEPA's *Guidance for Data Useability in Risk Assessment (Interim Final)* (USEPA, 1990a).

Comparison With Background A comparison of geometric means of sample concentrations from the different source areas with site-specific and/or southeastern United States background concentrations will be performed to determine which chemicals may reasonably be attributed to the site. Where possible, site-specific background concentrations will serve as the primary comparison point and local and/or references for regional background concentrations will be used as a secondary source for comparison.

Develop a Data Set for Use in Risk Assessment The ultimate product of the data evaluation and summarization is a set of analytical data in a form that can be used as input for quantitative risk assessments. Data that have been determined to be site-related and of sufficient quality will be summarized in tables that will include: (1) all compounds detected in at least one sample from each sampling event, (2) ranges of detected concentrations, (3) frequencies of detection, (4) mean concentrations, and (5) 95th-percentile upper confidence limits (UCLs) of the mean concentration.

In calculating mean and 95th-percentile UCLs of mean concentrations in these tables, the following adjustments will be made as appropriate: (1) results from duplicate samples from the same location will be averaged to yield one number; and (2) nondetectable values will be assigned a proxy value equal to one-half of

the sample quantitation limit (SQL), and (3) the data will be normalized (e.g., log-transformed) and the mean and 95th-percentile UCLs will be calculated from the normalized data. The presence of potential hot spots and trends in concentrations will be noted as appropriate.

Data Uncertainty A discussion of the uncertainties, both inherent and site-specific, that are associated with the data collection or analyses will be included. The potential effects of these uncertainties on the remaining portions of the risk assessment will be discussed.

Preliminary List of Site-Related Chemicals Based on the results of sampling conducted at the NCBC Gulfport sites in 1987 (HLA, 1987), a preliminary list of site-related chemicals has been developed for each site. These lists are presented in Table 3-2.

Preliminary Contaminants of Potential Concern Preliminary lists of contaminants of potential concern (COPC) have been developed based on the results of previous investigations at NCBC Gulfport (Table 3-3). These lists will be revised based on the results of sampling and analyses conducted during the RI.

3.7.2 Human-Health Risk Assessment The purpose of the Human-Health Risk Assessment will be to determine if contamination at the NCBC Gulfport sites could pose a health risk to individuals under current or foreseeable future site conditions. This assessment will be conducted in accordance with appropriate USEPA guidance documents in four basic steps:

- identification of contaminants of potential concern,
- exposure assessment,
- toxicity assessment, and
- risk characterization.

Collectively, these components describe (1) the contaminants at the site in each medium that may pose a hazard to human health, (2) the populations that might come in contact with site-related chemicals and the pathways through which they might be exposed, (3) the toxicity of contaminants of potential concern and the relationship between the dose and potential toxic effects, and (4) the likelihood of potential adverse health effects associated with contaminant exposure. The sections that follow describe the proposed approach to each of these individual components as they apply to the seven NCBC Gulfport sites.

3.7.2.1 Identification of COPC The data evaluation described above is expected to reduce the number of chemicals used in the risk-assessment data set by deleting chemicals which are:

- not analyzed by appropriate methods,
- not properly qualified,
- not positively identified in at least one sample,
- not detected in concentrations significantly elevated above blank concentrations,
- not detected in concentrations significantly above natural background levels, or

Table 3-2 Range of Detected Contaminants, 1987 Sampling (HLA, 1987) RI/FS Workplan NCBC Gulfport Gulfport, Mississippi

	Groundwater (µg/l)
Site 1	
Metals	
Chromium	81-415
Lead MCL 50 ppb	52-79
Sites 2 and 7	
Volatile Organics	
1,2-trans Dichloroethene	37
Trichloroethene	5
Toluene	1*
Metals	
Chromium	21-73
Lead	13-41
Site 3	
Metals	
Chromium	40-71
Lead	17-35
Site 4	
Metals	
Chromium	22-155
Lead	5.4-124
Site 5	
Metals	
Chromium	79-104
Lead	35-48
Site 6	
Volatile organics	
1,1-Dichloroethane	2
1,2-Dichloroethane	5
Metals	
Chromium	30-72
Lead	21-70

* = Below detection limit for analytical method.

Notes: ug/l = microgram per liter
mg/kg = milligram per kilogram
mg/l = milligram per liter

Table 3-3 Preliminary Contaminants of Potential Concern RI/FS Workplan NCBC Gulfport Gulfport, Mississippi

Identified by:	Analysis	Use History
Site 1		
	Chromium	2-butanone
	Lead	Cadmium
		1,2-Dichloroethane
		Polychlorinated biphenyls
		Toluene
		Xylenes
		Trichloroethene
Sites 2 and 7		
	1,2-trans Dichloroethene	Benzene
	1,1-Dichloroethene	Cadmium
	Trichloroethene	Ethylbenzene
	Toluene	Polychlorinated biphenyls
	Chromium	2-butanone
	Lead	Toluene
		Xylenes
Site 3		
	Chromium	Benzene
	Lead	2-Butanone
		Cadmium
		Ethylbenzene
		Polycyclic aromatic hydrocarbons
		Polychlorinated biphenyls
		Toluene
		Xylenes
Site 4		
	Chromium	2-Butanone
	Lead	Polycyclic aromatic hydrocarbons
		Polychlorinated biphenyls
		Toluene
		Xylenes

Table 3-3 (Continued) Preliminary Contaminants of Potential Concern RI/FS Workplan NCBC Gulfport Gulfport, Mississippi

Identified by:	Analysis	Use History
Site 5		
	Chromium	2-Butanone
	Lead	Dichlorodiphenyltrichloro-ethane (DDT)
		Polychlorinated biphenyls
		Toluene
		Xylenes
Site 6		
	1,1-Dichloroethane	2-Butanone
	1,2-Dichloroethane	Cadmium
	Chromium	Polycyclic aromatic hydrocarbons
	Lead	Toluene

- tentatively identified but not associated with the site based on historical information.

Previous USEPA guidance allowed a further reduction from the total set of chemicals detected at a site to present a set of chemicals that are likely to pose the greatest risks to human health. However, current Risk-Assessment Guidance for Superfund (RAGS) (USEPA, 1989a) suggests that all chemicals found be carried through the risk assessment. The most important contaminants, those presenting 99 percent of the risk, can be presented in the main text of the report. The results of the risk assessment for the remaining chemicals can be presented in appendices. This approach makes the risk-assessment report easier to read and understand and better focuses on the chemicals posing the major risks associated with the sites (contaminants of potential concern). The major criteria for selecting COPCs will be based on a concentration-toxicity screen. However, in selecting COPCs for human health at NCBC Gulfport, the following USEPA criteria will also be used in making a final selection (USEPA, 1989a):

- weight-of-evidence classification will be considered in addition to concentration and toxicity in risk screening;

- mobility, persistence, bioaccumulation, and potentially significant exposure routes will be considered;

- chemicals that are reliably associated with site activities will not be eliminated; and

- chemicals in concentrations approaching or exceeding ARARs will not be eliminated.

Chemicals that are not identified as COPCs will be clearly identified and the justification for their exclusion from the main text will be noted. Risks that are associated with these chemicals will be presented in an appendix, and total risk numbers for these chemicals will be added as appropriate to risk estimates in the main text.

3.7.2.2 Exposure Assessment The overall objective of the Exposure Assessment is to estimate the amount of contaminants to which individuals may be exposed via multiple-exposure pathways. This process involves exposure characterization, pathway identification, and exposure quantification. First exposure settings are characterized in terms of physical characteristics and the populations that could be exposed to site-related chemicals. The second step identifies all pathways through which exposure could occur. The final step is quantification of exposure for each population in terms of the amount of chemical either ingested, inhaled, or absorbed through the skin from all exposure pathways. This assessment process is performed for both current and foreseeable future site conditions.

Characterization of Exposure Setting The first step in the Exposure Assessment of a site is to characterize the physical and demographic features of the site that may influence the degree of human exposure. The physical setting at each site will be characterized in terms of the following attributes:

- climate
- meteorology
- geology
- vegetation

- soil type
- groundwater
- surface water

This information will be gathered from previous investigations and additional information collected during the RI. The information generated from this analysis will aid in defining the physical mechanisms that control or influence how people could be exposed at each site.

This initial step in the Exposure Assessment will also involve identifying potentially exposed populations surrounding each site and NCBC Gulfport as a whole. The focus of this step will be on identifying (1) the populations residing or working near each site, (2) the activity patterns of residents and/or workers, and (3) the locations of potentially sensitive subgroups. The following steps will be performed in order to characterize potentially exposed populations:

- determine current land use of the sites and surrounding areas (e.g., residential, commercial-industrial, or recreational),

- determine foreseeable future land use of the sites and surrounding areas, and

- identify potentially sensitive subpopulations.

Sources for this information will include the following: (1) site visit to NCBC Gulfport, (2) previous investigations, (3) information generated in the RI, (4) maps and photographs, and (5) interviews with NCBC Gulfport personnel.

Potentially Exposed Populations Based on current and expected future land use at the seven NCBC Gulfport sites and adjacent areas, the following potentially exposed populations have been identified: (1) child and adult residents, (2) trespassers and recreational populations, and (3) NCBC Gulfport workers. NCBC Gulfport operations at the seven sites are not expected to change so the current and expected future uses of the each site are assumed to be the same with the same potentially exposed populations. The potentially exposed populations may be revised as more information is gathered. The final list of potentially exposed populations for each site will reflect those individuals that may reasonably be expected to be exposed to site-related contaminants under current and foreseeable site conditions.

Identification of Exposure Pathways The purpose of this step in the Exposure Assessment is to identify all pathways through which people may be exposed to site-related contaminants. An exposure pathway consists of four necessary elements: (1) a source or mechanism of chemical release, (2) a transport or retention medium, (3) a point of human contact with the chemical, and (4) a route of exposure at the point of contact (USEPA, 1989b). In some cases, the source of release may be the point of contact, such as direct contact with a spill area.

Potential exposure pathways will be identified by first identifying sources of contamination and receiving media (i.e., groundwater, soils, surface water, or air). Once the sources are identified, relevant fate and transport mechanisms will be evaluated to predict future exposures. Exposure points and exposure routes (i.e., ingestion, inhalation, or dermal absorption) will be identified by determining the areas where people could come in contact with contaminated media and the likely mechanisms of exposure. Exposure pathways are considered complete

if they contain a source or mechanism of release, an exposure point where contact can occur, and an exposure route at the point of contact.

Complete pathways will be identified in the Exposure Assessment. Each complete pathway will be selected for quantitative evaluation in the risk assessment unless it can be shown that one of the following criteria applies (USEPA, 1989a):

- exposure from one pathway is much less than that from another involving the same medium and exposure point;
- the potential magnitude of exposure from a pathway is low; or
- the probability of the exposure occurring is very low and the risks associated with the occurrence are not high.

Justification will be provided for the exclusion of pathways from the quantitative evaluation.

Potential Exposure Pathways Potential exposure pathways for each of the seven NCBC Gulfport sites have been identified based on current knowledge of the sites. The similarities among the seven sites in terms of location and physical characteristics have lead to the identification of the same pathways for each of the seven sites. Pathways have been identified for three basic scenarios: (1) residential, (2) occupational, and (3) recreational or trespasser. A list of potential exposure pathways is presented in Table 3-4.

Unless information gathered in the RI indicates that these pathways are not relevant to the sites, these pathways will be evaluated in the Baseline Risk Assessment. Additional pathways may also be added, as appropriate, based on any new information.

Residential None of the seven NCBC Gulfport sites is currently used as a residential area. NCBC Gulfport has not been proposed for closure under the Base Realignment and Closure Act of 1991. The training and support activities conducted at NCBC Gulfport make the base unlikely to close in the foreseeable future. It is therefore unlikely that NCBC Gulfport will ever be used for residential purposes. If, however, NCBC Gulfport should close at some future date, potentials for residential exposure would be required to be addressed in base closure plans. Therefore, exposure to surface soil under residential conditions will not be evaluated as a current or future exposure pathway at any of the sites.

There is a potential for contaminant migration from soil to the surficial aquifer due to close proximity of groundwater to the surface and the rapid permeability of soils common to the area. Migration of contaminants in the surficial aquifer is expected to be primarily lateral because of impedance of vertical migration by underlying clayey sediments. Groundwater in the surficial aquifer moves primarily from topographic highs to areas of natural discharge, such as ditches and canals. The surficial aquifer is not used as a water source in the NCBC area. Groundwater from deeper aquifers is used as a source of potable water both on base and off base. There is some potential for vertical contaminant migration to underlying artesian aquifers. The uppermost artesian aquifer is at a depth of approximately 100 feet. The potential for vertical contaminant migration depends on the continuity and thickness of confining clay layers in the area. Ingestion of and dermal contact with contaminated groundwater and inhalation

Table 3-4 Matrix of Potential Current and Future Exposure Pathways RI/FS Workplan NCBC Gulfport Gulfport, Mississippi

Exposure Medium and Exposure Route	Exposure Point by Site Number	Residential Population	Occupational Population	Recreational/ Trespasser Population
Groundwater				
Ingestion	1, 2, 3, 4, 5, 6, and 7	A, C		
Dermal contact	1, 2, 3, 4, 5, 6, and 7	A, C		
Surface Soil				
Ingestion	1, 2, 3, 4, 5, 6, and 7		W	T
Dermal contact	1, 2, 3, 4, 5, 6, and 7		W	T
Surface Water				
Ingestion	1 and 4			A, C
Dermal contact	1 and 4			A, C
Air				
Inhalation	1, 2, 3, 4, 5, 6, and 7	A, C		
Showering	1, 2, 3, 4, 5, 6, and 7	A, C		

Notes:
A = Adult (18 to 70 years)
C = Child (1 to 6 years)
T = Trespasser
W = Adult worker

of volatilized contaminants from showering will be evaluated for on-base and off-base residents. Concentrations of volatile compounds released during showering will be estimated using a model developed by Foster and Chrostowski (1987).

Occupational Base personnel could be exposed to contaminants at the NCBC Gulfport sites if job-related activities require them to come in contact with the sites. Examples of activities that could result in exposure at these sites include installing and repairing fences and road construction. The actual relevance of these activities to each of the seven sites will be determined based on interviews with base personnel regarding future plans for the sites. The frequency and duration of such activities are highly variable and will depend on the specific activities, if any, that are planned for these sites.

Recreational-Trespasser Groundwater flows to areas of natural discharge, such as ditches and Canal No. 1 on NCBC. Although the canal is not directly related to any of the seven sites, it does border on Sites 3, 4, and 5. The catfish ponds adjacent to Site 1 have been drained and will be completely filled in prior to completion of the RI/FS. Evaluation of the base population will need to be conducted to determine whether dermal contact with and incidental ingestion of contaminated surface water is a potential exposure pathway. The catfish ponds will not be considered as a potential exposure pathway. Swimming and wading are of a recreational nature and are therefore addressed in the recreational-trespasser scenario.

As indicated above, exposure to surface soil under residential conditions at any of the sites is not likely. However, since many of the sites are in the relatively undeveloped western area of the NCBC, adults and children could trespass through the sites to varying degrees. Sites 1 and 5 are used as training areas for base personnel, while Site 4 is a golf course. Therefore, base populations could be exposed to surface soil via incidental ingestion and dermal contact as a result of trespassing on each site under both current and future site conditions.

Quantification of Exposure Once complete exposure pathways are selected for evaluation, the final step is to quantify exposure (i.e., intake) for each pathway. This quantification process involves developing exposure scenarios to estimate the total amount of contaminants that a hypothetical individual may ingest, absorb, or inhale from each exposure pathway. These exposure scenarios are based on several variables that can be grouped into the following categories:

- chemical-related variables,
- population-related variables, or
- assessment-related variables.

The ultimate goal of the step, as defined by USEPA guidance, is to identify the combination of these exposure variables or parameters that results in the most intense level of exposure that may "reasonably" be expected to occur under current and future site conditions (USEPA, 1989a). This is performed for each complete exposure pathway selected for evaluation. The resulting exposure scenarios are referred to as the "Reasonable Maximum Exposure" (RME) for each exposure pathway. The relative "intensity" of exposure for each pathway is a function of the identity of the potentially exposed population (e.g., child, adult, or worker) and the characteristics of exposure, such as frequency and duration.

The chemical-related variable in exposure quantification is the exposure concentration. The exposure concentration is the chemical concentration in the environmental medium that will be used to estimate intake. USEPA Region IV indicates that in human health risk assessment, data should be log-transformed and the 95-percentile UCL of the mean should be used as the exposure concentration. If there is wide variability in the data, the 95-percentile UCL may exceed the maximum detected concentration. In such cases, the maximum concentration will be used as the exposure concentration in place of the 95-percentile UCL.

Population-related variables describe the characteristics of a hypothetical individual within each potentially exposed population. These variables are either contact rates, such as exposure frequencies, and water and soil ingestion rates, or physical characteristics of human bodies, such as body weights and surface areas. When applicable, contact rates will be selected from the USEPA supplemental RAGs guidance *Standard Default Exposure Factors* (USEPA, 1991e). If site-specific factors indicate that such parameters are not appropriate, alternative parameters will be used based on knowledge of human behavior and the relative accessibility of the sites. Parameters describing the physical characteristics of the exposed populations will be identified from appropriate USEPA guidance (e.g., *Exposure Factors Handbook*, USEPA, 1989c).

The assessment-related variable that is involved in exposure quantification is the averaging time. Averaging time reflects the duration of exposure and depends on the type of effect being evaluated. Exposure intake during a defined interval (e.g., a lifetime) is averaged over the entire period, resulting in an estimate of average daily intake. This averaging is performed regardless of whether exposure actually takes place on a daily basis. It is assumed that infrequent exposure to chemicals over the exposure period is equivalent to daily exposure to a proportionately lesser amount as long as the total intake over the exposure period is the same.

There are essentially two types of effects typically evaluated in human-health risk assessment: (1) carcinogenic effects, and (2) noncarcinogenic effects. The averaging time for carcinogenic effects is assumed to be a 70-year lifetime according to USEPA guidance (USEPA, 1989a).

The averaging times for noncarcinogenic effects are equivalent to the duration of the exposure event and may vary depending on the nature of exposure. There is a wide range of possible estimates, from a few weeks to a lifetime. However, based on USEPA RAGS guidance, exposure duration for noncarcinogenic effects can roughly be categorized into one of three periods: (1) chronic exposures, 7 years to a lifetime; (2) subchronic exposures, 2 weeks to 7 years; and (3) acute exposures, less than 2 weeks (USEPA, 1989a). The length of the exposure period will depend on the potentially exposed population and the characteristics of exposure.

As indicated, USEPA has established default values for many of the variables that may be used in the risk assessments of the NCBC Gulfport sites. Table 3-5 presents a summary of some of these variables. Unless site-specific factors indicate otherwise, the values listed in Table 3-5 will be used to estimate intake.

Based on these variables, the RME intake for each exposure pathway selected for quantitative evaluation will be calculated. The equations used to calculate

Table 3-5 Default Exposure Parameters RI/FS Workplan NCBC Gulfport Gulfport, Mississippi

Parameter	Value	Units
Soil and Sediment Ingestion		
Adult	100	mg/day
Child (1 to 6)	200	mg/day
Worker	50	mg/day
Soil-skin adherence factor	1.45	mg/cm^2
Drinking Water Ingestion		
Residential	2	liters/day
Occupational	1	liter/day
Surface Water Ingestion	50	ml/hour
Inhalation Rate		
Adult, ambient air	20	m^3/day
Adult, indoor air	15	m^3/day
Adult, showering	0.6	m^3/hour
Fish consumption	54	g/day
Body Weight		
Child (1 to 6)	15	kg
Adult	70	kg
Averaging Time		
Lifetime	70	Years
Exposure Frequency		
Residential	350	Days/year
Occupational	250	Days/year
Exposure Duration		
Residential	30	Years
Occupational	25	Years

Sources: USEPA, 1989a; 1991e

Notes: mg/day = milligrams per day
mg/cm^2 = milligrams per square centimeter
liters/day = liters per day
ml/hour = milliliters per hour
m^3/day = cubic meter per day
m^3/hour = cubic meter per hour
g/day = grams per day
kg = kilogram
days/year = days per year

intake are those presented in Section 6 of USEPA's RAGS guidance, *Exposure Assessment*. The general equation for calculating chemical intake is as follows:

$$\text{Intake} = \frac{C \times CR \times EF \times ED}{BW \times AT}$$

where:

Intake	=	daily intake averaged over the exposure period,
C	=	concentration of the chemical in the exposure medium,
CR	=	contact rate for the medium of concern,
EF	=	exposure frequency,
ED	=	exposure duration,
BW	=	body weight of the hypothetically exposed individual, and
AT	=	averaging time (for carcinogens AT equals 70 years, for noncarcinogens, AT equals ED).

3.7.2.3 Toxicity Assessment The purpose of the Toxicity Assessment is to weigh available evidence regarding the potential for a chemical to cause adverse effects in exposed individuals and to provide an estimate of the relationship between the extent of exposure to the chemical and the increased likelihood or severity of adverse effects. The Toxicity Assessment is generally accomplished in two steps: hazard identification and dose-response assessment.

Hazard identification is the process of determining whether exposure to an agent can cause an increase in the incidence of a particular adverse health effect (e.g., cancer or birth defects) and whether that effect is likely to occur in humans. In this instance, hazard is defined as any chemical, substance, or situation at a site that is capable of doing harm to human health. The object of the dose-response assessment is to define the relationship between the dose of a substance and the likelihood that a toxic effect, either carcinogenic or noncarcinogenic, will result from exposure to that substance. As a result of this assessment, dose-response values are derived that will be used to estimate the incidence of adverse effects as a function of human exposure to an agent. There are two types of dose-response values: cancer slope factors (SF) and reference doses (RfD). The derivation of each value for a particular compound depends on the toxicity of that compound and whether it displays carcinogenic or noncarcinogenic effects. For many compounds, both types of values have been developed by USEPA because many compounds elicit both carcinogenic and noncarcinogenic (systemic) effects. In addition, because the toxicity and carcinogenicity of a compound can depend on the route of exposure (oral, inhalation, or dermal), unique dose-response values have been developed for the oral and inhalation exposure routes. In the absence of analogous values for the dermal route, the oral values will be used. Table 3-6 lists the Oral Toxicity Values for COPCs.

In most cases, the hazard identification and dose-response assessments have been performed by the USEPA. That is, USEPA has determined the hazards (carcinogenic versus systemic effects) associated with most chemicals that may be detected at hazardous waste sites, and has derived appropriate dose-response values for use in characterizing risks. The purpose of the dose-response assessment for the NCBC Gulfport sites will be to identify appropriate dose-response values for the COPCs at each site.

Sources of Dose-Response Values The primary source for identifying dose-response values for the COPCs at the NCBC Gulfport sites will be the USEPA's Integrated Risk Information System (IRIS). The IRIS is an on-line database containing health risk and USEPA regulatory information about specific chemicals. Health-risk information is included on IRIS only after a comprehensive review of chronic toxicity data by working groups composed of USEPA scientists. If no information can be found in IRIS, the USEPA Health Effects Assessment Summary Tables (HEAST) will be used (USEPA, 1990b). If appropriate dose-response values cannot be located from either of these two sources, other USEPA sources will be consulted. As a last resort, surrogate values will be developed from other chemicals based on similarities in toxicity and chemical structure of the compounds.

Dose-Response Values The IRIS database and HEAST tables have been searched to develop a set of dose-response values for contaminants of potential concern. These values, presented in Table 3-6, will be used in the quantitative human-health risk assessment to calculate potential risks to human health. Prior to using these values, the appropriate sources will be consulted to ensure that they are the most current dose-response values endorsed by USEPA. For those chemicals for which values could not be located (e.g., lead), a surrogate value or another method of assessing risks will be used.

Toxicity Assessment for Lead At the present time, there are no suitable dose-response values for assessing the risks associated with exposure to lead. However, USEPA has developed a biokinetic model to estimate blood-lead levels in children resulting from exposure via multiple sources (e.g., soil, water, air, food, and paint). This model will be used in the risk assessments to assess the potential risks associated with lead, as appropriate, rather than develop a surrogate dose-response value.

3.7.2.4 Risk Characterization Risk Characterization is the final step in the Human Health Risk Assessment in which the exposure and toxicity information generated in previous sections are integrated to qualitatively or quantitatively evaluate the potential health risks associated with exposure to chemicals at a site. For the NCBC Gulfport sites, quantitative estimates of both carcinogenic and noncarcinogenic risks will be calculated for each COPC identified in the Toxicity Assessment and each complete exposure scenario selected for evaluation in the Exposure Assessment.

Quantifying Risks Carcinogenic risks associated with exposure to individual chemicals will be estimated by multiplying the estimated chemical intake for each carcinogen (in units of milligrams per kilograms per day [mg/kg/day]) by its USEPA cancer SF (in units of [$mg/kg/day^{-1}$]). The result is a chemical-specific lifetime incremental cancer risk. This value represents the probability of developing cancer over the course of a 70-year lifetime as a result of exposure to a chemical. Within each exposure pathway, cancer risks that are associated with multiple carcinogenic compounds will be determined by summing the chemical-specific risks to yield a pathway-specific lifetime incremental cancer risk. The equations for calculating chemical-specific and pathway-specific cancer risks follow.

Table 3-6 Oral Toxicity Values for Chemicals of Potential Concern RI/FS Workplan NCBC Gulfport Gulfport, Mississippi

Chemical	WOE Class	Slope Factor $(mg/kg/day)^{-1}$	Source	Chronic Reference Dose (mg/kg/day)	Source
Benz(a)pyrene	-	-	-	-	-
Benzene	A	2.9×10^{-2}	IRIS, 10/31/91	-	-
2-Butanone	-	-	-	5×10^{-2}	IRIS, 4/25/91
Cadmium	-	-	-	5×10^{-4}	HEAST, 4th Q 89
Chromium III	-	-	-	1×10^{0}	IRIS, 3/19/91
Ethylbenzene	-	-	-	1×10^{-1}	IRIS, 5/1/90
Lead	B2	-	-	-	-
1,2-Dichloroethane	B2	9.1×10^{-2}	IRIS, 5/1/90	-	-
1,1-Dichloroethene	C	6×10^{-1}	IRIS, 4/25/91	9×10^{-3}	IRIS, 4/25/91
trans-1,2-Dichloroethene	-	-	-	2×10^{-2}	IRIS, 4/25/91
Dichlorodiphenyltrichloroethane (DDT)	B2	3.4×10^{-1}	IRIS, 10/31/91	5×10^{-4}	IRIS, 10/31/91
Polychlorinated biphenyls (PCBs)	B2	7.7×10^{0}	IRIS, 1/17/91	-	-
Toluene	-	-	-	3×10^{-1}	IRIS, 4/25/91
Trichloroethylene	B2	1.1×10^{-2}	HEAST, 4th Q 89	-	-
Xylenes	-	-	-	2×10^{0}	IRIS, 4/25/91

Notes:

WOE = weight of evidence
$(mg/kg/day)^{-1}$ = per milligram per kilogram per day
A = class A carciongen (proven carcinogen to humans)
Heast = Health Effects Assessment Summary Tables
IRIS = Integrated Risk Information System (database)
B2 = class B2 carcinogen (probable carcinogen to humans)
C = class C carcinogen (possible carcinogen to humans)

Chemical-specific lifetime incremental cancer risk

$$Risk_i = CDI_i \times SF_i$$

where:

$Risk_i$ = unitless probability of an individual developing cancer as a result of exposure to a chemical *i*,

CDI_i = chronic daily intake of chemical *i* averaged over 70 years (mg/kg/day), and

SF_i = USEPA cancer slope factor for chemical *i* $(mg/kg/day)^{-1}$.

Pathway-specific lifetime incremental cancer risk

$$Risk_T = \sum Risk_i$$

where:

$Risk_T$ = unitless probability of an individual developing cancer as a result of multiple chemical exposure, and

$Risk_i$ = unitless cancer risk estimate for the ith chemical.

Noncarcinogenic risk estimates will be determined by dividing estimated chemical intakes for each noncarcinogen (in units of mg/kg/day) by the appropriate RfD (in units of mg/kg/day). The resulting ratio is called the hazard quotient. The hazard quotients for individual compounds within an exposure pathway will be summed resulting in a hazard index for that pathway. The equations that will be used to calculate hazard quotients and hazard indices are as follows:

Hazard quotient

$$HQ_i = \frac{I_i}{RfD_i}$$

where:

HQ_i = hazard quotient of chemical *i*,

I_i = intake of chemical *i* averaged over the exposure period (chronic, subchronic, or acute) (mg/kg/day), and

RfD_i = reference dose for chemical *i* corresponding to the same exposure duration as the intake (mg/kg/day).

Hazard index

$$\text{Hazard Index} = \sum HQ_i$$

where:

HQ_i = hazard quotient for the ith chemical.

Separate hazard indices will be calculated for the three lengths of exposure discussed earlier: chronic, subchronic, and acute. Depending on the type of

chemicals present, a separate hazard index might also be calculated for developmental toxicants.

Combination of Risks Across Exposure Pathways USEPA guidance states that risk estimates should be combined across exposure pathways if the same individual could reasonably be exposed to more than one pathway, and it is reasonable to assume that the same individual would consistently experience the RME intake estimated in the exposure assessment (USEPA, 1989a). Therefore, if the same potentially exposed population could be exposed to contaminants via more than one pathway, the pathway-specific risks will be summed to yield a single risk estimate for each population. Similarly, the hazard indices from multiple pathways will be summed to yield a single hazard index for each population.

Uncertainty Evaluation The interpretation of risk estimates is subject to a number of uncertainties as a result of the multiple layers of conservative assumptions inherent in risk assessment. All quantitative estimates of risk are based on numerous assumptions, most intended to be protective of public health (i.e., conservative). As such, risk estimates are not truly probabilistic estimates of risk, but rather conditional estimates given a series of conservative assumptions about exposure and toxicity.

In general, sources of uncertainty can be categorized into site-specific factors and Toxicity Assessment factors. A thorough discussion of all potential sources of uncertainty in risk assessment is not feasible; however, a discussion of the major sources of uncertainty and their potential effects will be provided to aid the reader in interpreting the relative significance of the results.

Summary The risk estimates calculated for each of the NCBC Gulfport sites will be presented in tabular form by potentially exposed population. The calculations of these estimates will be documented in spreadsheets in an appendix. Within the summary text, a discussion will be provided of the relative significance of each risk estimate.

The relative significance of risk estimates will be evaluated in terms of a comparison with target risk levels established by the USEPA. USEPA's guidelines state that the total incremental carcinogenic risk for an individual resulting from exposure at a hazardous waste site should not exceed a range of 10^{-6} to 10^{-4} (USEPA, 1989a). The target risk level for noncarcinogenic effects is a hazard index of 1 (USEPA, 1989a).

The significance of an elevated hazard index requires evaluation on a case-by-case basis. It is assumed that if the hazard index is less than or equal to 1, no adverse health effects will result from the predicted exposure level. If the ratio is greater than 1, the predicted exposure level could potentially cause adverse health effects. This determination is necessarily imprecise because the derivation of RfDs involves the use of multiple safety factors. In addition, although hazard quotients are typically summed regardless of target organ effects, hazard quotients for individual compounds should properly be summed only if their target organs or mechanisms of action are similar. Therefore, the potential for adverse health effects for a mixture having a hazard index in excess of 1 will be assessed on a case-by-case basis.

3.7.3 Ecological Risk Assessment The purpose of the Ecological Risk Assessments for NCBC Gulfport is to provide a baseline evaluation of actual and potential risks to the natural environment posed by chemicals present in environmental

media at the seven sites. This information, in conjunction with the Human-Health Risk Assessments (Section 3.7.2) and other information collected, will be used to determine appropriate future action at the sites. The *Risk Assessment Guidance for Superfund (RAGS)*, Volume 2, *Environmental Evaluation Manual* (USEPA, 1989b), will be used to prepare the ecological risk assessments.

Each ecological risk assessment will include the following elements:

- biological characterization (Section 3.7.3.1),
- identification of chemicals of potential concern (Section 3.7.3.2),
- ecological exposure assessment (Section 3.7.3.3),
- ecotoxicity assessment (Section 3.7.3.4), and
- ecological risk characterization (Section 3.7.3.5).

The following sections describe the proposed approach for each of these components of the risk assessment and, where possible, discuss site-specific information.

3.7.3.1 Biological Characterization The biological characterization will serve as a basis for identifying potential ecological receptors at NCBC Gulfport. It provides a description of the different biological habitats located at NCBC Gulfport, and of the animal life that is expected to be found associated with these habitats. This characterization will be based on a site reconnaissance, background information available for the site, literature information on the range and distribution of wildlife species, and interviews with local, State, and Federal wildlife officials. Particular emphasis will be placed on the following: assessing habitat suitability for aquatic and terrestrial organisms; assessing the potential occurrence of rare, threatened, or endangered species; and identifying wetland or other aquatic areas that may be receptors of site-related contaminants. Additionally, plant communities at each site will be described and observations of aquatic or terrestrial organisms will be recorded. The results of the receptor analysis will be used to further develop exposure scenarios for the ecological Exposure Assessment.

Using information presented in the IAS (Envirodyne, 1985), a brief discussion of terrestrial and aquatic habitats and local species expected at NCBC Gulfport is provided in the following sections.

<u>Terrestrial Habitats</u> The physiographic province in which NCBC Gulfport is situated is called the Coastal Pine Meadows. This region can be characterized as a flat and local swampy belt that meanders along the Gulf coast, typically ranging from 5 to 15 miles in width and 5 to 30 feet above sea level. Groundwater lies near the surface throughout this region and may occasionally pool in depressions during the rainy season. The vegetation typical of this land form is an open growth of pine with an understory characteristic of bogs and pine savannas. Table 3-7 lists common flora occurring at NCBC. The area in which NCBC Gulfport is situated was previously typified by the pine species: the longleaf pine (*Pinus palustris*), loblolly pine (*Pinus taeda*), and slash pine (*Pinus elliotti*). A number of other tree species could be found in drier areas: water oak (*Quercus nigra*), live oak (*Quercus virginiana*), turkey oak (*Quercus leaevis*), magnolia (*Magnolia grandiflora*), sourwood (*Oxydendrum arboreum*), and leatherwood (*Cyrilla racemiflora*). The shores of creeks and low, wet depressions typically harbored the following: water tupelo (*Nyssa aquatica*), gallberry (*Ilex spp.*), saw palmetto (*Serenoa repens*), titi (*Cliftonia monophylla*), bald cypress

Table 3-7 List of Common Flora Occurring in Plant Communities Near NCBC Gulfport RI/FS Workplan NCBC Gulfport Gulfport, Mississippi

Common Name	Scientific Name
Black titi	*Cliftonia monophylla*
Titi	*Cyrilla racemiflora*
Pipewort	*Eriocaulon decangulare*
Pipewort	*Eriocaulon septangulare*
Dwarf huckleberry	*Gaylusacia dumosa*
Gallberry	*Ilex glabra*
Yaupon	*Ilex vomitoria*
Magnolia	*Magnolia grandiflora*
Water tupelo	*Nyssa aquatica*
Wild olive	*Osmanthus americanus*
Sourwood	*Oxydendrum arboreum*
Red bay	*Persea palustris*
Yellow butterwort	*Pinguicula lutea*
Slash pine	*Pinus elliotti*
Longleaf pine	*Pinus palustris*
Loblolly pine	*Pinus taeda*
Spreading pogonia	*Pogonia divaricata*
Pine-barren milkwort	*Polygala cymosa*
Yellow milkwort	*Polygala lutea*
Dwarf milkwort	*Polygala nane*
Turkey oak	*Quercus laevis*
Laurel oak	*Quercus laurifolia*
Live oak	*Quercus virginiana*
Deer grass	*Rhexia blabella*
Swamp meadow beauty	*Rhexia stricta*
Sweet pitcher plant	*Sarracenia rubra*
Trumpet-leaf	*Sarracenia flava*
Yellow-eyed grass	*Xyris torta*

Source: Initial Assessment Study (Envirodyne, 1985)

(*Taxodium distichum*), red maple (*Acer rubrum*) and willows (*Salix spp.*) (Lowe, 1921).

Remaining natural areas within the NCBC Gulfport boundaries consist of 401 acres of slash pine with the western portion of the property retaining many of the original characteristics of the area (flat and swampy) and a number of original species constituents. Among the species present in the pine areas in a previous study (Envirodyne, 1985) were: sweet gallberry (*Ilex coriacea*), southern magnolia (*Magnolia grandiflora*), tallow tree (*Sapium sebiferum*), morning glory (*Ipomea sp.*), fennel (*Eupatorium spp.*) and golden rod (*Solidago spp.*). Where standing water persists, bald cypress (*Taxodium distichum*) and willow (*Salix spp.*) were periodically found growing in association with slash pine stands.

A remnant of a small stand of oak trees was noted near the western edge of the property in one of the better drained areas. Live oak (*Quercus virginiana*) and water oak (*Quercus nigra*) were the most conspicuous species with occasional tallow trees (*Sapium sebiferum*) growing among them. Fennel (*Eupatorium spp.*) and greenbriar (*Smilax sp.*) were constituents of groundcover. Resurrection fern (*Polypodium polypoioides*) was growing epiphytically on a number of oak limbs. Scattered occurrences of smaller oak trees were noted elsewhere.

Because of activities at NCBC Gulfport, some areas were predominated by species characteristic of disturbed areas. Fennel, goldenrod, morning glory, poison ivy (*Toxicodendron radicans*), poison sumac (*Toxicodendron vernix*), and rattlebox (*Sesbania sp.*) were common in these areas.

Aquatic Habitats There are no natural drainage systems, such as creeks, present at NCBC Gulfport, though most areas drain off-base. Turkey Creek represents the closest natural drainage system which would receive Base runoff. Turkey Creek, which lies approximately 2,000 feet north of the NCBC property line, is classified by the State of Mississippi as a water for the propagation and management of fish and wildlife. The vegetation associated with Turkey Creek is typical of the region.

Aquatic habitats associated with NCBC Gulfport include man-made lakes and drainage ditches. As these areas appear to be periodically maintained, most of the wetlands vegetation associated with their borders tend to remain artificial or at early successional stages. Some of the plant species found in or adjacent to NCBC Gulfport include: rattlebox (*Sesbania sp.*), cattail (*Typha sp.*), morning glory (*Ipomea* sp.), unidentified pipewort (*Eriocaulon* spp.), pennywort (*Hydrocotyle* sp.), willow (*Salix* sp.), and unidentified grasses. A rare plant, *Lilaeopsis carolinensis*, was also noted inhabiting some of the grassed ditches during the IAS (Envirodyne, 1985).

Aquatic and Terrestrial Animals Turkey, deer, fox, and skunk have been reported to be occasionally seen just off the NCBC property. Two interviewees during the IAS (Envirodyne, 1985) reported that an alligator inhabited one of the golf course lakes. The NCBC lakes and former sewage lagoons (catfish ponds) were reported as being stocked with largemouth bass, bluegill, redear sunfish, and channel catfish for recreational fishing. The catfish ponds have been drained and are currently being filled. During the IAS on-site survey, numerous species (or evidence of them) were observed on the NCBC property. Turtles were observed in a number of drainage ditches. The cattle egret and great egret were observed foraging in aquatic habitats. Raccoon tracks were found at various locations on NCBC, particularly near aquatic habitats. Rabbit scat was also observed in

wooded areas, suggesting that at least one species of rabbit is present in moderate numbers on the NCBC property.

A list of various species of aquatic and terrestrial organisms common to the Coastal Pine Meadows of Mississippi is provided in Table 3-8. This list will be supplemented with additional fauna observed during the biological survey that will be conducted for each site as part of the baseline risk assessment.

According to the IAS (Envirodyne, 1985), there are 20 species of animals in Mississippi listed as endangered or threatened by the U.S. Fish and Wildlife Service (USFWS); five of these may occur in the NCBC Gulfport region. In addition, the Mississippi Department of Wildlife Conservation (MDWC) lists a total of 39 species that it considers endangered, threatened, or unusual. Of these, three species in addition to the five federally listed species are known in the region. The Mississippi Natural Heritage Program (NHP), an affiliate of the MDWC, lists another 110 species as endangered, threatened, or rare. Although this listing has no currently defined legal status, the Program is recognized and given consideration statewide. Nine species listed on the NHP may occur at NCBC Gulfport, in addition to those listed by the USFWS and MDWC. The seventeen endangered, threatened, or unusual species potentially occurring near NCBC Gulfport are listed in Table 3-9. No protected plant species, as listed by the USFWS or MDWC, are known to occur in Mississippi, but the NHP lists 16 endangered, threatened, or rare species occurring in the vicinity of NCBC Gulfport (Table 3-9). These listings of threatened, endangered, and rare species are, however, over 5 years old. These lists will be updated for the RI/FS.

3.7.3.2 Identification of Chemicals of Potential Concern A summary of contaminants detected at each site during the 1987 sampling is presented in Table 3-3. Based on the data evaluation described in Section 3.7.1 and other information (including new data), the list of detected chemicals will be screened and a list of ecological COPCs will be developed. This screening process limits the number of chemicals evaluated by focusing on those chemicals expected to pose ecological risks at each site. The identification of chemicals of potential concern will be based on:

- the measured chemical concentrations and frequency of detection in various media at the various sites,
- the inherent toxicity and bioaccumulation potential of chemicals detected,
- the probability of significant exposure,
- the physical and chemical properties of chemicals detected, and
- for inorganics, relation to the chemical concentration in background samples.

Limiting the chemicals evaluated in the ecological risk assessments at this time is not warranted given the amount of available data. Therefore, for the purposes of this work plan, all chemicals listed in Table 3-3 will be considered as COPCs.

3.7.3.3 Ecological Exposure Assessment The purpose of the ecological exposure assessment is to evaluate the potential for ecological exposure to site-related chemicals at NCBC Gulfport. This involves identification of actual or potential

Table 3-8 Fauna Potentially Inhabiting the NCBC Gulfport Area RI/FS Workplan
NCBC Gulfport Gulfport, Mississippi

Common Name	Scientific Name
Fishes	
Naked sand darter	*Ammocrypta beani*
Banded pygmy sunfish	*Elassoma zonatum*
Sharpfin chubsucker	*Erimyzon tenuis*
Swamp darter	*Etheostoma fusiforme*
Speckled darter	*Etheostoma stigmaeum*
Banded darter	*Etheostoma zonale*
Starhead topminnow	*Fundulus notti*
Bayou killifish	*Fundulus pulvereus*
Mosquitofish	*Gambusia affinis*
Freshwater goby	*Gobionellus shufeldi*
Yellow bullhead	*Ictalurus natalis*
Channel catfish	*Ictalurus punctatus*
Bluegill	*Lepomis macrochirus*
Spotted gar	*Lepisosteus oculatus*
Redear sunfish	*Lepomis microlophus*
Spotted sunfish	*Lepomis punctatus*
Spotted bass	*Micropterus punctulatus*
Largemouth bass	*Micropterus salmoides*
Longnose shiner	*Notropis longirostris*
Blacktail shiner	*Notropis venustrus*
Blackbanded darter	*Percina nigrofasciata*
Dusky darter	*Percina sciera*
Herpetofauna	
Cottonmouth	*Agkistrodon piscivorus*
Flatwoods salamander	*Ambystoma cingulatum*
Mole salamander	*Ambystoma talpoideum*
Green anole	*Anolis carolinensis*
Common snapping turtle	*Chelydra serpentina*
Pond Slider	*Chrysemys scripta*
Southern black racer	*Coluber constrictor*
Southern dusky salamander	*Desomognathus auriculatus*
Ringneck snake	*Diadophis punctatus*
Corn snake	*Elaphe guttata*

Table 3-8 (Continued) Fauna Potentially Inhabiting the NCBC Gulfport Area
RI/FS Workplan NCBC Gulfport Gulfport, Mississippi

Common Name	Scientific Name
Herpetofauna -- continued	
Five-lined skink	*Eumeces fasciatus*
Eastern narrow-mouthed toad	*Gastrophryne carolinensis*
Mississippi map turtle	*Graptemys kohni*
Green treefrog	*Hyla cinerea*
Pine woods tree frog	*Hyla femorlis*
Mississippi mud turtle	*Kinosternon subrubum*
Water snake	*Nerodia sipedon*
Pig frog	*Rana grylio*
Southern leopard frog	*Rana utricularia*
Eastern spadefoot toad	*Scaphiopus holbrooki*
Southern fence lizard	*Sceloporus undulatus*
Pygmy rattlesnake	*Sistrurus miliarus*
Stinkpot	*Sternotherus odoratus*
Box turtle	*Terrapene carolina*
Garter snake	*Thamnophis sirtalis*
Birds	
Red-winged blackbird	*Agelaius phoeniceus*
Cattle egret	*Bubulcus ibis*
Green heron	*Butorides striatus*
Northern cardinal	*Cardinalis cardinalis*
Great egret	*Casmerodius albus*
Common nighthawk	*Chordeiles minor*
Common bobwhite	*Colinus virginianus*
American crow	*Corvus brachyrhynchus*
Blue jay	*Cyanocitta cristata*
Yellow-throated warbler	*Dendroica dominica*
American kestrel	*Falco sparverius*
Common moorhen	*Gallinula chloropus*
Louisiana heron	*Hydranassa tricolor*
Ring-billed gull	*Larus delawarensis*
Belted kingfisher	*Megaceryle alcyon*
Red-bellied woodpecker	*Melanerpes carolinus*
Turkey	*Meleagris gallopavo*

Table 3-8 (Continued) Fauna Potentially Inhabiting the NCBC Gulfport Area
RI/FS Workplan NCBC Gulfport Gulfport, Mississippi

Common Name	Scientific Name
Birds--continued	
Northern mockingbird	*Mimus polyglottos*
Osprey	*Pandion haliaetus*
House sparrow	*Passer domesticus*
Common grackle	*Quiscalus quiscula*
King rail	*Rallus elegans*
Rough-winged swallow	*Stelgidopterux ruficollis*
Foster's tern	*Sterna fosteri*
Eastern meadowlark	*Sturnella magna*
Caroline wren	*Thryothorus ludovicianus*
Eastern kingbird	*Tyrannus tyrannus*
Mourning dove	*Zenaida macroura*
Starling	*Sturnus vulgaris*
Mammals	
River otter	*Lutra canadensis*
Bobcat	*Lynx rufus*
Striped skunk	*Mephitis mephitis*
Mink	*Mustela vison*
Eastern woodrat	*Neotoma floridana*
Whitetail deer	*Odocoileus virginianus*
Muskrat	*Ondatra zibethica*
Rice rat	*Oryzomus palustris*
Cotton mouse	*Peromyscus gossypinus*
Raccoon	*Procyon lotor*
Black rat	*Rattus rattus*
Eastern harvest mouse	*Reithrodontomys humulis*
Eastern gray squirrel	*Sciurus carolinensis*
Eastern fox squirrel	*Sciurus niger*
Cotton rat	*Signmodon hispidus*
Spotted skunk	*Spilogale putorius*
Swamp rabbit	*Sylvilagus aquaticus*
Eastern cottontail	*Sylvilagus floridanus*

Table 3-8 (Continued) Fauna Potentially Inhabiting the NCBC Gulfport Area
RI/FS Workplan NCBC Gulfport Gulfport, Mississippi

Common Name	Scientific Name
Mammals - continued	
Gray fox	*Urocyon cineroargenteus*
Opossum	*Didelphis marsupialis*
Nine-banded armadillo	*Dasypus novemcinctus L.*

Source: Initial Assessment Study (Envirodyne Engineers, 1985)

Table 3-9 List of Endangered, Threatened, and Rare Flora and Fauna of the Coastal Pine Meadows Region RI/FS Workplan NCBC Gulfport Gulfport, Mississippi

Common Name	Scientific Name	Likely to be found at NCBC	MDWC	USFWS
Flora				
Spreading pogonia	*Cleistes divaricata*	P	R	
Balsomscale	*Elyonyrus tripsacoides*	P	R	
Green fly orchid	*Epidendrum conopseum*	N	R	
Pipewort	*Eriocaulon lineare*	P	R	
Dangleberry	*Gaylussacia frondosa*	P	R	
Parsley	*Lilaeopsis carolinensis*	Y	R	
Paspalum	*Paspalum monostachym*	P	R	
Prairie clover	*Petalostemum gracile*	P	R	
Butterwort	*Pinguicula primuliflora*	N	R	
Large white-fringed orchid	*Plantanthera blephariglottis*	P	R	
Crested fringed orchid	*Plantanthera cristata*	P	R	
Clammy-weed	*Polanisia tenufoilia*	N	R	
Milkwort	*Polygala hookeri*	P	R	
Murtle oak	*Quercus myrtifolia*	N	R	
Beak rush	*Rhynchospora macra*	P	R	
Giant spiral orchid	*Spiranthes longilabris*	P	R	
Fishes				
Atlantic sturgeon	*Acipenser oxyrhynchus*	N	E	E
Striped bass	*Morone saxtilis*	N		R
Herpetofauna				
American alligator	*Alligator mississippiensis*	Y	E	E
Scarlet snake	*Cemophora coccinea*	P	R	
Southern hognose snake	*Heterodon simus*	P	E	E

See notes at end of table.

Table 3-9 (Continued) List of Endangered, Threatened, and Rare Flora and Fauna of the Coastal Pine Meadows Region RI/FS Workplan NCBC Gulfport Gulfport, Mississippi

Common Name	Scientific Name	Likely to be found at NCBC	MDWC	USFWS
Scarlet kingsnake	*Lampropeltis triangulum elapsoides*	P	R	
Atlantic Ridley turtle	*Lepidochelys kempi*	N	E	E
Yellow-lipped snake	*Rhainaea flavilata*	P	R	
Birds				
Snowy plover	*Charadrius alexandrinus*	N	E	
Reddish egret	*Egretta rufescens*	Y	R	
American oystercatcher	*Haematopus palliatus*	N	R	
Bald eagle	*Haliaeetus leucocephalus*	N	E	E
Black rail	*Laterallus jamaicensis*	N	R	
Brown pelican	*Pelecanus occidentalis*	P	E	E
Least tern	*Sterna antillarum*	P	R	
Mammals				
Southeastern shrew	*Sorex longirostris*	P	R	
West Indian Manatee	*Trichechus mantus*	N	E	E

Source: Initial Assessment Study, Envirodyne (1985)

Notes: MDWC = Mississippi Department of Wildlife Conservation
USFWS = United States Fish and Wildlife Service
NHP = Mississippi Natural Heritage Program
Y = Yes, has been or is likely to be observed at NCBC
N = No, not likely to be observed at NCBC
P = Potential for observation at site
E = Endangered
T = Threatened
R = Rare (NHP)

exposure routes to receptors (identified based on the biological characterization) and the evaluation of the magnitude of exposure. The exposure information is used in conjunction with toxicological information presented in Section 3.7.3.4 to evaluate risk in the ecological risk characterization (Section 3.7.3.5).

Identification of Potential Receptors In this section, potential receptor areas and associated receptor species at each site at NCBC Gulfport will be described. If appropriate, indicator species will be selected for exposure modeling. Based on existing information, potential receptor areas at NCBC Gulfport will be identified (drainage ditches, Canal No. 1, and wooded areas). These areas will be re-evaluated and described in greater detail after completing the biological survey for each site. Various aquatic and terrestrial organisms are expected or have been documented in these receptor areas. Organisms living in these areas or passing through the study area may come into contact with contaminated water, sediment, and soil.

Identification of Ecological Exposure Pathways To determine if exposure might occur, at present or in the future, the most likely pathways of chemical release and transport, and the activity patterns of potential receptors that occur near the site need to be defined. In this section, exposure pathways to these ecological receptors will be identified and the magnitude of potential exposure estimated.

Exposure pathways describe how ecological receptors may come in contact with contaminated media and are based on identifying (1) the contaminant source, (2) the environmental transport medium, (3) the point of receptor contact, and (4) the exposure route (e.g., ingestion of prey items that have bioaccumulated chemicals in their tissues, drinking of contaminated surface water, incidental soil ingestion, or dermal absorption).

There are three environmental media by which environmental receptors may come into contact with chemical constituents present at NCBC Gulfport: surface water (including groundwater as it discharges to surface water), sediments, and surface soil. Exposure to constituents in these media at NCBC Gulfport may occur via several pathways. This assessment will be expanded and revised based on agency reviews and as additional information becomes available.

The locations of the NCBC sites suggest ecological receptors could be exposed through the following routes of exposure:

- direct contact or incidental ingestion of surface soils,
- ingestion of contaminated food items (food chain exposure), and
- direct contact with or ingestion of surface water and sediments.

Incidental ingestion of contaminated surface soil by environmental receptors associated with foraging and preening activities may result in exposure. The consumption of prey items that have bioaccumulated chemicals in their tissues is another potentially significant exposure pathway.

Potential exposures to terrestrial organisms (birds, mammals, reptiles, and amphibians) are expected to vary considerably between species due to differences in feeding behavior, habitat preferences, and other factors affecting exposure. Because of this variability, indicator species will be selected as part of the

exposure assessment to best represent the species of terrestrial wildlife potentially exposed.

Direct contact with soil by terrestrial organisms is not considered a likely exposure pathway because fur, feathers, and chitinous exoskeletons act to impede chemical absorption across the dermal layer or body integument. Inhalation of particulate airborne constituents by terrestrial organisms is also not considered a significant route of exposure because of the limited extent of barren soil associated with the various sites, which would be necessary to produce significant airborne dust concentrations.

Estimation of Exposure Based on chemical concentration data, exposure concentrations will be estimated for aquatic and terrestrial organisms identified as potential receptors at each site. If sufficient information exists, integrated exposure analyses will be performed by combining exposure information (e.g., populations exposed, duration and frequency of exposure, and routes of exposure) to calculate a quantitative estimate of the exposure concentration for representative receptor species.

Exposure to Aquatic Receptors Exposure levels for terrestrial and aquatic organisms are developed separately because terrestrial and aquatic organisms are exposed to different media. As noted above, aquatic organisms are exposed to surface water and sediments, but terrestrial exposure occurs via exposure to surface soil, ingestion of biota containing bioaccumulated chemicals, or incidental ingestion of surface water or sediment.

To evaluate exposure to aquatic organisms, concentrations of site-related chemicals in surface water and sediment will serve as representative exposure concentrations. Average and maximum values will be used to represent chronic and acute exposures, respectively.

Exposure to Terrestrial Receptors The process of evaluating the degree of terrestrial exposure involves estimating the likely exposure dosage for each relevant pathway, and then summing these estimates to derive an expected total body dosage for each receptor type. The degree of exposure will depend on various factors including the type of food consumed, feeding rates, habitat preference, and home range. Indicator species will be chosen to best characterize the organisms and trophic levels potentially at risk because of incidental ingestion of contaminated soil and consumption of contaminated prey items. It is assumed that each species chosen will be representative of other species at a similar trophic position. The documentation of exposure parameters for each representative species will be presented in tabular format (an example is presented in Table 3-10).

Using information on water intake rate, body weight, and dermal absorption rate, exposures will be estimated for each terrestrial indicator species for each of the exposure pathways identified. These exposures, which are body doses expressed in milligrams per kilogram body weight per day (mg/kg BW/day) for each COPC, will be calculated using computer spreadsheet models.

A simple food-web model may be used to estimate contaminant levels in the various prey items consumed by each receptor species. Estimated contaminant tissue residues in each prey species will be calculated using specific bioaccumulation factors obtained directly or extrapolated from values in the scientific literature as shown in the following equation:

Table 3-10 Ecological Exposure Parameters, Example Table RI/FS Workplan NCBC Gulfport Gulfport, Mississippi

Receptor Species	Exposure Parameter	Reported Values	Reference	Value Selected for Ecological Risk Assessment
Eastern gray squirrel (Sciurus carolinensis)	Home range (acres)	2 to 7 acres, >1.24 acres, 1.2 acres, and 1.4 acres.	DeGraaf and Rudis, 1986	1.4 acres
	Percent prey items	**Plant food:** 10 to 50 percent oak acorns and flowers, 10 to 25 percent hickory, 5 to 10 percent beech and maple, and <5 percent other plant species. **Animal food:** incidental ingestion of weevils; occasionally eats caterpillars, beetles, and ants.	Martin, and others 1951	Plants: 80% Invertebrates: 15% Soil: 5%
	Ingestion rate (kilograms per day)	Allometric relationship between body weight (W) and ingestions rate (F) for laboratory mammals: F = 0.056×W^0.6611	USEPA, 1988b	0.035 kilograms per day
	Body weight (kg)	0.34 to 0.68 kg	Baker, 1983	[1]0.5 kilogram
	Drinking water intake rate (1 per day)	Allometric relationship between body weight (W) and drinking water intake rate (L) for laboratory mammals: L = 0.10×W^0.7377	USEPA, 1988	0.06 liter per day
	Density (number per acre)	2 per acre, 1 per acre, and 0.65 per acre	Baker, 1983	1 per acre
	Lifespan (years)	>3 to 4 years, and 7 to 8 years	Baker, 1983	6 years

Prey tissue concentration (mg/kg) = soil concentration (mg/kg) × bioconcentration factor (BCF)

The potential dietary exposure (PDE) level, for each modeled receptor species, will be calculated by multiplying each predicted prey species tissue concentration by the proportion of that prey type in the diet, summing these values, adding soil exposure (soil ingestion will be assumed to be 5 percent of diet), and multiplying by the receptor species' Site Foraging Frequency (SFF). PDE is represented by the following equation:

$$PDE = [\sum_{1 "n} P_1 \times T_1 + P_2 \times T_2 + \ldots P_n \times T_n + \text{soil exposure}] \times SFF$$

where:

PDE	=	potential dietary exposure (mg/kg),
P_n	=	percent of prey item ingested,
T_n	=	tissue concentration in prey item n (mg/kg),
Soil Exposure	=	(0.05) (soil concentration in mg/kg), and
SFF	=	area of contaminated soil (acres) divided by home range (acres).

Finally, the potential dietary exposure for each receptor species is multiplied by the receptor-specific ingestion rate and divided by the estimated body weight to calculate a total body dose (TBD):

$$TBD = PDE \times IR \times \frac{I}{BW}$$

where:

TBD	=	total body dose (mg/kg BW/day),
PDE	=	potential dietary exposure (mg/kg),
IR	=	ingestion rate (kg/day), and
BW	=	body weight (kg).

These TBD estimates are directly comparable to available toxicological test data, which are discussed in the ecotoxicity portion of the Workplan (Section 3.7.3.4).

3.7.3.4 Ecotoxicity Assessment In the Ecotoxicity Assessment, the environmental hazards associated with the chemicals of concern identified in Section 3.7.3.2. will be described, and the relationship between the concentration to which an organism is exposed and the potential for adverse environmental effects will be evaluated.

The toxicological evaluation comprises the process of characterizing the inherent toxicity of the compounds. Information necessary to evaluate the potential impacts to receptors at the exposure concentration determined in Section 3.7.3.3 consists of laboratory-derived toxicological data published in the literature. Toxicological effects considered include the acute and chronic toxic effects of hazardous constituents on aquatic biota and terrestrial wildlife.

Toxicological effects considered in the Ecotoxicity Assessment include concentration-response data on the acute and chronic toxic effects of hazardous constituents on aquatic biota and terrestrial wildlife. The concentration-

response information, in conjunction with exposure information is used to develop Reference Toxicity Values (RTVs) for each COPC.

Toxicity to Terrestrial Receptors Toxicity data for terrestrial receptors consist of acute and chronic ingestion studies. Based on these data, RTVs are developed for terrestrial organisms that represent a threshold concentration for effects to terrestrial organisms. The RTVs are expressed in mg/kg/BW/per day. From the toxicological data set, the lowest acute and chronic values for each type of receptor (representative species) will be selected as the RTV.

Toxicity to Aquatic Receptors Information available to evaluate the toxicity of COPCs in surface water includes Ambient Water Quality Criteria (AWQC), laboratory-derived toxicity data, and toxicity threshold values developed using extrapolation techniques. These sources will be used to generate RTVs for the COCPs in surface water. The aquatic toxicological data available for all preliminary COPCs are presented in Table 3-11; however, this list will be modified as more data become available (e.g., if all chemicals listed are not detected in surface water). As noted earlier, aquatic organisms will not be exposed to chemicals in groundwater unless the groundwater is discharged to a surface water body. Therefore, the aquatic RTVs apply to exposure to aquatic organisms in the water column and do not apply to groundwater directly.

If AWQC are not available for certain site chemicals, USEPA Lowest Observed Effect Levels (LOEL) will be used. The LOEL values, which are the lowest concentrations causing toxicity reported in the literature, are used instead of AWQC when insufficient data exist for USEPA to develop a national criterion. For certain chemicals, toxicity data may be limited to the results of acute toxicity studies. To develop a chronic RTV for these chemicals, a Quantitative Structure Activity Relationship (QSAR) model presented in Hermens et al, (1984) or other appropriate references will be used to estimate an RTV.

Sediment Quality Criteria (SQC) for hydrophobic organic chemicals (USEPA, 1988) and "non polluted threshold values" for inorganic chemicals are available to evaluate the effects of the COPCs in sediment on aquatic life. The SQCs have been developed for a number of hydrophobic organic compounds based on their expected partitioning between sediment organic matter and interstitial water, and are dependent on the total organic carbon present in the sediment. Using this equilibrium-partitioning approach, an SQC value will be calculated for COPCs detected in sediment.

The SQCs are not suitable for evaluating the effects of the inorganic COPCs on aquatic life. In lieu of SQCs, "nonpolluted threshold values" have been calculated based on USEPA water-quality criteria and assumed partitioning equilibrium between sediment and water. These threshold values are based on the assumption that the distribution of a chemical between the organic carbon phase of the sediment and the soluble phase in interstitial water of the sediment is described by the organic carbon-water partition coefficient (K_{oc}) for the chemical. The sediment threshold value is the concentration in sediment that will not exceed the USEPA water quality criterion in the interstitial water.

3.7.3.5 Ecological Risk Characterization This section characterizes the risk to aquatic and terrestrial receptors potentially exposed to COPCs at NCBC Gulfport. The magnitude of risk present depends upon the magnitude, duration, and frequency of exposure to the chemicals and on the characteristics of the exposed populations. This exposure information, detailed in Section 3.7.3.3,

Table 3-11 Reference Toxicity Values for Aquatic Organisms RI/FS Workplan
NCBC Gulfport Gulfport, Mississippi

Chemical	Reference Toxicity Value		
	Surface Water		Sediment
	Chronic (μg/l)	Acute (μg/l)	Chronic (mg/kg)
Volatile organics			
Benzene	530(c)	5,300(d)	NA
2-Butanone	50,900(a)	3,200,000	NA
1,1-Dichloroethane	6,740(a)	144,000(b)	NA
1,1-Dichloroethylene	1,160(c)	11,600(d)	NA
trans-1,2-Dichloroethene	1,160	11,600(d)	NA
Ethylbenzene	3,200(c)	32,000(d)	NA
Toluene	1,750(c)	17,500(d)	NA
Trichloroethylene	21,900(d)	45,000(d)	NA
Xylenes	TBD	TBD	NA
Semivolatile Organics			
Benz(a)pyrene	TBD	TBD	TBD
Polychlorinated biphenyls	0.014	2.0	TBD
Pesticides			
Dichlorodiphenyl-trichloroethane (DDT)	0.001	1.1	TBD
Inorganics			
Cadmium	1.1(e)	3.9(e)	31
Chromium III	210(e)	1,700(e)	NA
Lead	3.2(e)	82(e)	132

a = Hermens, et al, 1984
b = Veith, et al, 1986
c = Ten-Fold Acute/Chronic Factor applied.
d = Insufficient data available to develop a criterion. Value presented is a L.O.E.L. - Lowest Observed Effect Level.
e = Hardness-dependent criteria (100 mg/l $CaCO_3$ used)

Notes:
NA = Not Applicable
TBD = To be determined based upon total organic content of the site-specific sediments.
μg/l = micrograms per liter
mg/kg = milligram per killigram

combined with the appropriate toxicity data presented in Section 3.7.3.4 will be the basis for the risk characterization. Risks to aquatic and terrestrial receptors will be characterized for each site.

The projected intakes and exposure concentrations calculated in the exposure assessment for each COPC and exposure route will be compared with the RTVs developed in the Ecotoxicity Assessment. The ecological risk assessment will also include a discussion of visual observations of ecosystem degradation and qualitative species diversity, abundance, and distribution among trophic levels, if observable during the site reconnaissance.

Risks to Aquatic Receptors Comparison of the mean and maximum concentrations of chemicals detected in surface water and sediments with RTVs for aquatic organisms provides a means of evaluating the potential for adverse effects from exposure to site-related chemicals. Hazard indices (HI) will be calculated by dividing the exposure concentration by the RTV. A cumulative HI will then be determined by summing the HIs for each chemical. If the cumulative HI value is greater than 1.0, effects to aquatic organisms may be occurring. From this comparison, it will be possible to determine if COPCs are posing a threat to aquatic organisms.

Risks to Terrestrial Receptors Risks to terrestrial receptors will be evaluated by calculating an HI by dividing the estimated body dose by the RTV for each COPC. A cumulative HI will then be determined by summing the HIs for each chemical. If the cumulative HI value is greater than 1.0, effects to terrestrial organisms may be occurring. The HIs will be calculated on the same spreadsheets used to estimate terrestrial exposure presented.

3.8 PROJECT MANAGER MEETINGS. During the RI program, and prior to initiation of FS activities, one or more interim technical Project Managers meetings will be held. These meetings will consist of a presentation of work performed and data evaluated, a verbal report of significant findings, identification of data gaps, and a decision for additional data collection or further action needed at any of the sites. These decisions will be documented in meeting minutes and will be implemented in a timely manner.

Final data interpretation will conclude with an evaluation of the degree and distribution of contamination, and one of the following recommendations:

- take no further action or initiation long-term monitoring and prepare a ROD,
- perform source removal or migration mitigration (interim or early remedial action),
- obtain additional RI data needed for additional characterization,
- conduct a Focused Feasibilty Study (FFS),
- conduct Treatability Studies, and/or
- conduct a Feasibilty Study.

3.9 FEASIBILITY STUDY PROCESS. The overall objective of the FS is to develop and evaluate remedial alternatives which will allow the selection of a remedial

action that is protective of public health and the environment, implementable, cost-effective, and meets CERCLA requirements, as amended by SARA.

If a site has a limited number of remedial alternatives, an FFS may be conducted. Interim or early remedial actions may be performed if site conditions pose an immediate threat to human health or the environment. Details of interim or early remedial actions and FFS processes will be determined on a site-specific basis. The standard RI/FS approach consists of an RI, treatability studies, an FS, and preparation of an ROD.

The standard FS will consist of the following tasks:

- compilation of ARARs,
- development of remedial alternatives,
- screening of remedial alternatives,
- detailed analysis of remedial alternatives,
- engineering description of selected remedial alternatives,
- RI/FS reports,
- public meetings, and
- Record of Decision (ROD)

3.9.1 Applicable or Relevant and Appropriate Requirements The ARARs are used to help determine the appropriate extent of site cleanup, develop site-specific remedial response objectives, develop remedial action alternatives, and direct site cleanup. The SARA (Section 121) and the NCP require that CERCLA remedial actions comply with Federal ARARs and State requirements when applied legally and consistently statewide. Appendix F contains a preliminary checklist of Federal ARARs pertinent to the Gulfport RI/FS program. Federal Maximum Contaminant Levels (MCLs) and MCL Goals (MCLGs) have been established for NCBC and are listed in Appendix G of this document.

Applicable requirements are Federal and State requirements that specifically address substances or contaminants and actions. Relevant and appropriate requirements are Federal and State requirements that, while not legally applicable, can be applied if the site circumstances are sufficiently similar to those covered by jurisdiction, and if use of the requirement is appropriate. Applicable requirements and relevant and appropriate requirements are considered equivalent compliance standards for CERCLA site cleanups.

The SARA also identifies a "to be considered" (TBC) category, which includes Federal and State nonregulatory requirements such as criteria, advisories, and guidance documents. The TBCs do not have the same status as ARARs; however, if no ARAR exists for a chemical or particular situation, TBCs can be used to ensure that a remedy is protective.

The ARARs must be attained for hazardous substances remaining on-site at the completion of the remedial action. Remedial action implementation should also comply with ARARs (and TBCs, as appropriate) to protect public health and the environment. Generally, ARARs pertain to either contaminant levels or to performance or design standards to ensure protection at all points of potential exposure. The ARARs are divided into three general categories: chemical-specific, location-specific, and action-specific.

Both Federal and State ARARs must be considered; prior to the 1986 SARA amendments, compliance to State requirements was not required. In addition,

USEPA draft guidance entitled *CERCLA Compliance With Other Laws Manual*, revised in August 1988, identifies new methods and guidance for identifying, categorizing, and evaluating ARARs.

The ARARs are usually identified and considered during several phases of the RI/FS process. A preliminary checklist of probable ARARs has been compiled during the scoping of the RI/FS (see Appendix F). Additional chemical- and location-specific ARARs will be identified during the site-characterization phase of the RI. Consideration and identification of additional action-specific ARARs will take place during the development and screening of alternatives during the FS.

Detailed discussions of action-specific ARARs with respect to each proposed alternative and compliance of each alternative to all ARARs will be discussed during the detailed analysis and selection of the preferred alternatives section. The ARARs are also summarized in the RODs and play an important role in remedial design and remedial action plans.

Examples of ARARs of importance in determining clean-up standards, restricting location of activities, and specifying design and operation features follow.

- Chemical-specific ARARs (e.g., Federal MCLs for drinking water) will be used to help set clean-up levels for water. Appendix G contains a listing of compounds and elements with their associated action or clean-up levels based on USEPA standards, MCLs, and MCLGs.

- The CWA and COE regulations are location-specific ARARs. These are example ARARs that will limit activities in and near a wetland that may have a detrimental impact on the functioning of the wetland. If Federal- or State-endangered or threatened species are identified at the site, the Federal and State laws protecting these species will comply.

- Federal RCRA regulations and the Mississippi Waste Management Regulations are action-specific ARARs. These ARARs will govern the location, design, construction, operation, performance, and closure of all activities generating, storing, transporting, treating, or disposing of hazardous waste. In addition, these ARARs play an important role in determining the cost of design, construction, operation, and closure of proposed remedial response alternatives. The RCRA land-ban regulations will also determine the degree of treatment and the possibility of land disposal for certain wastes. Other important action-specific ARARs include the Federal CWA National Pollutant Discharge Elimination System (NPDES) program and State-specific surface and groundwater discharge standards, if any. These standards will determine the type, quantity, and concentrations of wastewater discharge allowable. For incineration alternatives, proposing to incinerate waste or treat groundwater via air stripping for example, the Federal and State Clean Air Act and emissions standards are considered ARARs. The Mississippi Wetlands Protection Law will be an ARAR if the site is designated as a wetlands area.

- The TBCs, such as USEPA guidance on landfill liners and caps and conducting RI/FSs, and USEPA health advisories and risk-related criteria will be identified and used where necessary.

3.9.2 Development of Remedial Alternatives There are four standard steps for developing remedial alternatives:

- development of remedial response objectives,
- development of general response actions,
- identification and screening of applicable remedial technologies, and
- assembly of remedial alternatives.

3.9.2.1 Development of Remedial Response Objectives Remedial response objectives consist of medium-specific or operable-unit-specific goals to protect public health and the environment; they may also be site-specific if the site consists of one medium (e.g., soils). Remedial response objectives specify primary COPCs by medium, exposure routes, and receptors, and list target cleanup levels for each contaminant.

Standard preliminary response objectives (USEPA standards, MCLs, and MCLGs) are listed in Appendix G. More specific objectives will be developed based on information obtained from the RI site characterization and risk assessment. These objectives will specify COPCs, exposure routes and receptors, and potentially acceptable contaminant levels or ranges of levels for each exposure route.

3.9.2.2 Development of General Response Actions General response actions are general purpose statements describing probable remediation activities at a given site to achieve remedial response objectives. Preliminary response actions will be refined throughout the FS as technologies and action-specific ARARs are identified and as a more complete understanding of a site is reached. As with remedial response objectives, general response actions may be medium, operable unit, or site-specific.

3.9.2.3 Identification and Screening of Applicable Remedial Technologies Documented technologies will be reviewed to identify those representative of general response actions. This initial assessment will involve a literature search of USEPA-published reports, environmental journals, and vendor information. Results of the literature search will be presented as an identification table including the general response action category, the specific technology, and a brief technology description. The initial identification will be performed once for NCBC Gulfport as a whole, with consideration to general response actions for individual sites and media of concern.

Data needs for remediation can include environmental factors such as topography, climate, site geology and hydrogeology; physical and chemical characteristics of the matrices and contaminants of concern; and site characteristics such as area for equipment set-up, accessibility, and proximity of utilities, sewer systems, and water supplies. Appendix H contains a detailed list of data needs for a representative selection of remedial technologies.

After the RI, applicable technologies may be identified and screened. The screening step assesses each technology for its probable effectiveness and implementability with regard to site-specific conditions, known and suspected

contaminants, and affected environmental media. These factors will be incorporated into two screening criteria: waste- and site-limiting characteristics. Waste-limiting characteristics largely determine effectiveness and performance of a technology; site-limiting characteristics affect implementability of a technology.

Waste-limiting characteristics consider the effect that physical and chemical properties of individual compounds, and of compound mixtures, might have on a given process. Physical and chemical properties that are considered might include volatility, solubility, specific gravity, sorption potential, degradation, cosolvent effects, and reactivity.

Site-limiting characteristics consider site-specific physical features including topography, buildings, underground utilities, available space, and proximity to sensitive operations. For example, a mobile incinerator may require an area of 2 acres, which may not be available at a particular site.

3.9.2.4 Assembly of Remedial Alternatives A range of remedial alternatives will be developed that, as a group, addresses each remedial response objective established for a particular site. The range of alternatives will reflect (1) a no-action alternative, (2) various volumes of media and/or areas of the site, (3) several degrees of long-term management, and (4) differences in reduction of mobility, toxicity, and volume.

For each alternative developed, a narrative description will be provided, including the logic used to develop the alternative and other information describing its implementation.

3.9.3 Screening of Remedial Alternatives Alternatives will be screened on the basis of effectiveness, implementability, and cost. These three screening criteria conform with remedy selection requirements of CERCLA and the NCP.

Screening eliminates impractical alternatives or higher cost alternatives (i.e., order of magnitude) that provide little or no increase in effectiveness or implementability over the lower cost counterparts. The no-action alternative will not be evaluated according to screening criteria; this alternative will be evaluated during detailed analysis as a baseline for other alternatives.

The effectiveness criteria are based on factors such as reductions in mobility, toxicity, and volume in terms of protection of public health and the environment. Both short- and long-term aspects will be evaluated. Short-term aspects refer to risks posed to the community and workers during the construction and implementation period, the alternative's compliance with chemical- and location-specific ARARs, and the time required to achieve remedial action objectives. Long-term aspects, which apply after the remedial action has been completed, consider the magnitude of the remaining risk due to untreated wastes and waste residuals, and the adequacy and reliability of specific technical components and control measures.

The implementability criteria are a measure of technical and administrative feasibility. Short-term technical feasibility considers the availability of a technology for construction or mobilization and operation, as well as compliance with action-specific ARARs during the remedial action. After the remedial action is complete, technical feasibility focuses on operation and maintenance (O&M), replacement, and monitoring of technical controls of residuals and untreated

wastes. Administrative feasibility addresses coordination with regulatory and other agencies, and the availability of required services and trained specialists or operators.

Costs include an estimate of both capital and O&M expenditures. Accuracy of -30 to +50 percent is not required at this stage; the focus is to identify costs of primary technical components to facilitate a comparative analysis. Indirect costs, contingencies, and costs common to all alternatives need not be considered.

Based on this screening evaluation, a decision will be made to either eliminate an alternative from further consideration or retain it for detailed analysis. Recommendations will be documented in a conclusion for each alternative. Before proceeding further in the FS process, a meeting will be held among the Navy, USEPA, MDEQ, and ABB-ES representatives. The objective of this meeting will be to discuss alternatives to be carried into detailed analysis.

3.9.4 Detailed Analysis of Remedial Alternatives A detailed analysis of each remedial alternative may include the following:

- detailed descriptions with emphasis on application, and
- detailed analysis of each remedial alternative relative to the nine evaluation criteria established to address CERCLA requirements (Section 121[b]).

Where appropriate, alternative descriptions may present preliminary design calculations, process flow diagrams, sizing of key components, preliminary site layouts, and a discussion of limitations, assumptions, and uncertainties concerning each alternative.

As part of the criteria analyses, remedial alternatives are examined with respect to requirements stipulated in CERCLA (Section 121), as amended by SARA. The CERCLA emphasizes the evaluation of long-term effectiveness and related considerations for each remedial alternative. The statutory considerations listed in Section 121 include the following seven criteria:

- long-term uncertainties associated with land disposal;
- goals, objectives, and requirements of the Solid Waste Disposal Act;
- persistence, toxicity, and mobility of hazardous substances and their constituents and their propensity to bioaccumulate;
- short- and long-term potential for adverse health effects from human exposure;
- long-term maintenance costs;
- potential for future remedial action costs if the remedial alternative were to fail; and
- potential threat to public health and the environment associated with excavation, transportation, and redisposal or containment.

The USEPA's nine criteria will be used to address these considerations, as well as technical and policy factors likely to be important for selecting remedial alternatives (USEPA, 1988). These criteria are:

- short-term effectiveness;
- long-term effectiveness and permanence;
- reduction of toxicity, mobility, or volume;
- implementability;
- cost;
- compliance with ARARs;
- overall protection of human health and environment;
- State acceptance; and
- community acceptance.

3.10 RI/FS REPORTS. The RI/FS report will address the field program methods and results, laboratory analytical results, site characterization, and risk assessment based on evaluations and interpretations of RI data. Hydrogeologic, hydrologic, contaminant assessment, and risk-assessment data will be synthesized to provide a comprehensive understanding of site conditions. Those data will be used to identify ARARs, screen applicable remedial technologies, develop remedial alternatives, select the preferred alternative, prepare the proposed plan, and to prepare the ROD.

Primary documents will include a Draft RI/FS Report, an Interim Draft RI/FS Report, the Final RI/FS Report, and a proposed plan. Each document will be submitted to the Navy for review. After comments have been addressed, the Navy will release the Interim Draft RI/FS Report and Proposed Plan to USEPA and MSDEQ for review and comment.

3.11 RECORD OF DECISION. The RODs will be prepared, following a public review period, in accordance with USEPA *Interim Final Guidance on Preparing Superfund Decision Documents* (OSWER Directive 9355.3-02) and USEPA *Guide to Developing Superfund No Action, Interim Action, and Contingency Remedy RODs* (USEPA, 1991d).

No-Action Record of Decision A No-Action ROD may be prepared after completion of the RI at sites or portions of sites (operable units) where one or more of the conditions listed below apply.

1. The site (or operable unit) poses no current or potential threat to human health or the environment. For example, sites where the baseline risk assessment determines that site conditions do not pose unacceptable risks to human health or the environment.

2. Sites (or operable units) where the authority for remedial action is not covered under CERCLA. For example, a release that contained only petroleum product that is exempt under CERCLA Section 101.

3. Sites (or operable units) where previous response actions eliminated the need for further action. For example, where a previous removal action eliminated potential risks to human health and the environment.

Interim Action Record of Decision An Interim Action ROD is an intermediate decision document that addresses specific actions or temporary measures taken to mitigate an imminent threat to human health or the environment. Interim Actions

are not final remedial solutions and must be followed by a standard operable unit ROD. Examples of Interim Actions are listed below (USEPA, 1991d):

- installing extraction wells to restrict the migration of contaminated groundwater, with the intention of later initiating a final remedial action;

- providing a temporary alternate source of drinking water, with the intention of later initiating a final remedial action;

- constructing a temporary cap to control or reduce migration and/or exposures until final action can be taken; or

- relocating contaminated material for temporary storage to reduce the risk of exposure. For example, moving excavated soil from a residential area. This could also be considered a final Early Action if no further excavation or treatment is required.

An RI/FS report is not required prior to initiation of an Interim Action; however, sufficient data to support an interim action or decision must be documented in the Interim Record of Decision as well as a brief description of alternatives considered and the rationale for the selected action.

Early Remedial Action Early Remedial Actions can be divided into two categories: interim or final. The primary distinction between the two categories is that Interim and Interim-Early Remedial Actions are temporary measures taken to mitigate an imminent threat. In contrast, Early Remedial Actions are final actions that can lead to a No-Action ROD or may be a portion of a standard FS ROD.

Examples of final Early Remedial Actions include: source removal and contaminated soil excavation to the extent that no further action is required, or drum removal, limited soil excavation, and disposal.

FS Record of Decision An FS ROD is a standard ROD describing the selected remedial action for a particular site or operable unit. In general, this document will summarize problems that are associated with a site, alternatives that are considered in addressing such problems, and a comparative analysis that is based on nine CERCLA criteria (see Section 3.9.4). The components of a standard ROD, as stated in USEPA guidance (USEPA, 1991d), are outlined below.

1. **Declaration**
   - Site name and location
   - Statement of basis and purpose
   - Assessment of the site
   - Description of the selected remedy
   - Statutory determinations
   - Signature and support agency acceptance of the remedy

2. **Decision Summary**
   - Site name, location, and description
   - Site history and enforcement activities
   - Highlights of community participation
   - Scope and role of operable unit
   - Site characteristics

Summary of site risks
Description of alternatives
Summary of comparative analysis of alternatives
Selected remedy
Statutory determinations
Documentation of significant changes

3. **Responsiveness Summary**
Community preferences
Integration of comments

Key aspects include presentation of the selected remedy with the rationale applied in its selection, and explanation of how the remedy satisfies the requirements of CERCLA, Section 121(b).

SECTION 4

4.0 TECHNICAL APPROACH

The RI technical approach that is developed for each site is based on several considerations including: (1) the physical characteristics and geographic location of the site, (2) the history and previous use of the site, (3) results and conclusions of previous investigations, and (4) site reconnaissance. Two previous investigations have been conducted: (1) an IAS by Envirodyne Engineers, Inc., completed in July 1985, and (2) a Verification Study by HLA, completed in November 1987. Previous investigative results are detailed in Section 2.0 and previous analytical results are summarized in Tables 2-7 through 2-12.

This section provides a summary of the proposed technical approach for RI activities for each of the seven sites (and areas on the base selected for background/base-wide information) that will be investigated. Each subsection provides: background information and a description of each location; a summary of previous investigative results, if applicable; a rationale for proposed remedial investigative activities; and a description of proposed RI survey and sampling activities for each of the seven sites. The final subsections describe activities that are common to all sites and a summary of the number of survey and sampling points for all sites.

The general approach for investigating the seven sites includes three basic steps: (1) survey techniques to define the lateral and vertical extent of the disposal areas, this information provides guidance for defining the source area and selecting subsequent sampling locations; (2) screening techniques with on-site analyses, these data can be used to direct and refine confirmation sampling locations; and (3) CLP sampling and analyses in conformance with Level IV DQOs, to provide defensible confirmation of the presence or absence, magnitude, and quantification limits of contaminants. Level III DQOs will be used for analyses not included in the CLP SOW.

For health and safety reasons, invasive sampling techniques (e.g., drilling or TerraProbe) performed within the boundaries of the disposal areas will be limited. Invasive sampling within disposal areas will be performed only where necessary to characterize the source area and only after disposal trenches have been located. Sampling locations adjacent to and beyond the boundary of the disposal areas can generally provide sufficient characterization and delineation data.

All existing monitoring wells at NCBC Gulfport are constructed of standard Schedule 40 PVC casings and well screens. This material (PVC) is not expected to significantly interact with contaminants detected or suspected at NCBC Gulfport (Appendix B). For these reasons, and to avoid excessive cost, proposed monitoring wells will be constructed of standard Schedule 40 PVC casings and well screens. All monitoring well sampling for laboratory analysis will be conducted in conformance with Level IV DQOs for CLP analyses and Level III DQOs for analyses not included in the CLP SOW to minimize and trace potential sampling interferences.

4.1 BACKGROUND/BASE-WIDE SAMPLING.

4.1.1 Description and Background Background sampling and monitoring of groundwater and surface and subsurface soils will be performed in the Housing/

Recreation Area in the eastern section of the Activity (Figure 4-1). This location was selected because it is away from the sites that will be investigated and industrial areas at the Activity, it is primarily a residential area with recreational facilities (e.g., swimming pool, picnic pavilion, and ballfield), and has no history itself of industrial operations. Six additional surface soil samples will be collected in the vicinity of the sites as shown in Figure 4-1.

Surface water and sediment sampling will be performed on NCBC Gulfport property at the locations where Canal No. 1 enters and exits the Activity (see Figure 4-1). Canal No. 1 enters the NCBC Gulfport along the western boundary of the Activity and exits along the northern boundary of the base.

4.1.2 Rationale and Technical Approach The data generated from base-wide sampling activities will be used to evaluate the following:

- background levels of naturally occurring TAL inorganics in the subsurface soils;
- background levels of naturally occurring TAL inorganics in the surface soils and the potential impact on surface soils from wide-spread use of pesticides and vehicular traffic; and
- background levels of naturally occurring TAL compounds in groundwater.

The objectives of sampling the surface water and sediments in Canal No. 1 are to determine if potential contaminants are entering the Activity from areas outside the Base and if potential site-related contaminants are leaving the Base through surface water and/or bedload transport.

4.1.3 Proposed Investigation The following provides brief descriptions of proposed Base-wide investigative methods and sampling and analysis plans.

Aerial Photography Survey An aerial photography survey will be conducted, consisting of procuring, evaluating, analyzing, and interpreting available historical and recent aerial photographs to aid in the assessment of background data and to evaluate the history of Canal No. 1.

Surface Soil Sampling Six surface soil samples will be collected from areas in the western part of NCBC Gulfport. The proposed locations are shown in Figure 4-1. The locations were selected to represent four soil types reported to be present at NCBC Gulfport (see Section 2.3.3.2 of the Workplan). These samples will be submitted to the laboratory for analysis of TCL SVOC, TCL pesticides and PCBs, TAL inorganics, and TPH. Analytical data will be used to evaluate background surface soils for compounds that are associated with wide-spread use of pesticides and vehicular traffic, and to provide data regarding natural levels of TAL inorganics at NCBC Gulfport.

Actual sample locations will be chosen in the field based on reconnaissance of the proposed locations. Samples will be collected in areas that are free of visible contamination and away from local industrial-type activities. Surface soil samples will be collected from 0- to 1-foot using a hand auger or similar device.

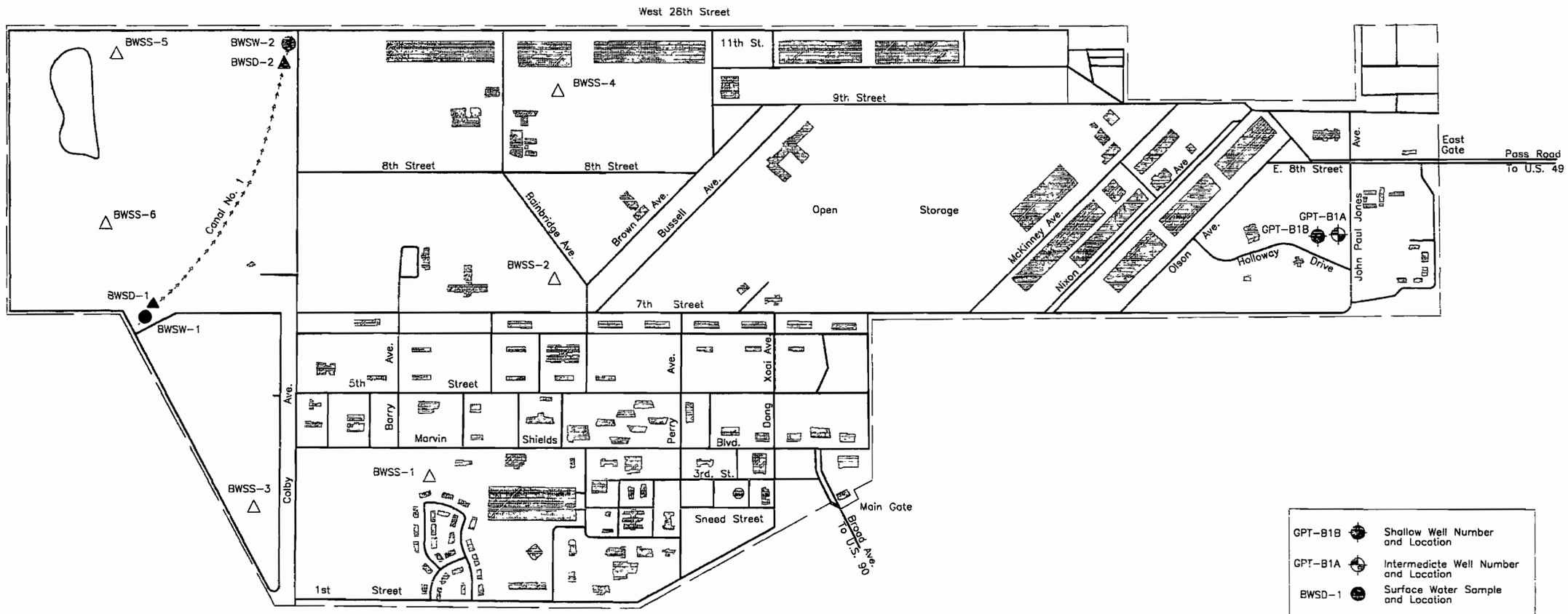

Reference: Map of Harrison County, Mississippi by Continental Aerial Surveys, Inc., 1982 as modified by HLA Field Reconnaissance, March, 1987.

FIGURE 4-1
BACKGROUND/BASE-WIDE SAMPLING AND MONITORING LOCATIONS

RI/FS WORKPLAN

NAVAL CONSTRUCTION BATTALION CENTER
GULFPORT, MISSISSIPPI

Soil Borings Two borings will be conducted in the eastern part of the Activity off John Paul Jones Avenue (see Figure 4-1). These borings correlate with completion of a monitoring well pair (GPT-B1A and GPT-B1B). One of the borings will extend into the clay layer and will be the location of an intermediate-depth monitoring well. The other boring will extend approximately 9 feet below the water table and will be the location of a shallow monitoring well. The borings are located away from the sites and in an area used for housing and recreation that does not have a history of industrial activity.

Split-spoon sampling will be conducted continuously to the water table and each 5 feet thereafter. The purposes of split-spoon sampling are to characterize subsurface soils to confirm the presence of the clay layer, and to obtain background data for soil to use in evaluating the status of contamination at the sites. Three soil samples will be collected for laboratory analysis; one surface soil (0 to 2 ft), one sample above the water table, and one from the top of the clay layer. The surface soil sample will be submitted for analysis of TCL pesticides and PCBs, TCL SVOC, TCL VOC, TPH and TAL inorganics. These data will be used to evaluate background surface soils for compounds that are associated with wide-spread use of pesticides and vehicular traffic, and to provide data regarding natural levels of TAL inorganics at NCBC Gulfport. The other two soil samples that are collected from the intermediate boring will be submitted to the laboratory for analysis of TAL inorganics, TCL VOCs, and TPHs. The data from all three background soil samples will be compared to data for soil samples that are collected from the sites to aid in identification of potential inorganic contaminants at the sites. Soil samples will be collected and analyzed in conformance with Level IV DQOs except that analyses not included in the CLP SOW will be analyzed using Level III DQOs.

Groundwater Sampling Two monitoring wells will be installed in the eastern part of the Activity off John Paul Jones Avenue (see Figure 4-1). The well pair will be installed in an area that is used for housing and recreation that does not have a history of industrial activity. The purpose of the well pair is to obtain groundwater samples for a full TCL and TAL analyses. Sampling and analysis will be in conformance with Level IV DQOs for CLP analyses and Level III DQOs for TDS and TSS. The data will be used to evaluate background concentrations of inorganics in groundwater. Active potable wells will also be sampled.

Analysis of groundwater samples that are collected from the area of the sites during the Verification Study indicated concentrations of chromium and lead in groundwater ranging from 21 to 392 $\mu g/l$ and 5.4 to 124 $\mu g/l$, respectively. These compounds were present at apparent elevated concentrations in monitoring wells upgradient and downgradient of the individual sites and are not presently considered to be site related. The concentrations of chromium and lead that were detected in groundwater samples may be indicative of groundwater quality in the surficial aquifer or may be a consequence of analyzing turbid groundwater samples. The TAL inorganic, TDS, and TSS data from the two monitoring wells to be installed in the eastern part of the Activity will provide information regarding chromium and lead levels at a location away from the sites. Laboratory analysis of background groundwater samples will include TAL inorganics on filtered and unfiltered samples.

The well pair will consist of a shallow well and an intermediate-depth well, which is consistent with monitoring well installations proposed for the sites. The shallow well will be constructed to intercept the water table in the screened interval. The intermediate well will be constructed with the screened interval

situated above the clay layer. The wells will be constructed using 2-inch-ID, Schedule 40 PVC riser pipe and well screens. Justification for the use of PVC in well construction is included in Appendix B. Well screens will have 0.01-inch machined slots, based on the anticipated occurrence of silty sands. The wells will be constructed and installed in conformance with USEPA Region IV SOPs (USEPA, 1991) and SOUTHNAVFACENGCOM guidelines.

Sediment and Surface Water Sampling Two sediment and two surface water samples (two "sets") will be collected from Canal No. 1 at locations shown on Figure 4-1. One sample set will be collected from a location near the NCBC property line where Canal No. 1 enters the property. The second sample set will be collected from a location near the NCBC property line where Canal No. 1 exits the property. The purpose of this sampling is to evaluate sediment and surface water in Canal No. 1 for contaminants from sources outside the limits of NCBC Gulfport and for the presence of contaminants being transported off NCBC Gulfport property.

Surface water and sediment samples, including background samples, will be collected and analyzed in conformance with Level IV DQOs. Level III DQOs will be used for analyses not included in the CLP SOW. Laboratory analyses, for both sediment and surface water samples, will include TCL VOC, TCL SVOC, TCL pesticides and PCBs, TPH, and TAL inorganics. In addition, surface water samples will be analyzed for TAL inorganics, TDS, and TSS. Both filtered and unfiltered surface water samples will be submitted for TAL inorganic analyses. The TCL VOC of surface water samples will use a low-concentration method. A low level CLP analysis is preferred (1991 SOW) because surface water ARARs are commonly below the CRQL associated with the 1988 CLP SOW.

4.2 CHARACTERIZATION OF FIRST CONFINED AQUIFER.

4.2.1 Description and Background The groundwater sources in southern Mississippi consists of a sand and sand-and-gravel surficial aquifer overlying the Citronelle Formation and the Miocene aquifer system. In Gulfport, the surficial aquifer and the Citronelle Formation are separated by a layer of clay, with varying amounts of sand, ranging in thickness from 28 to 197 feet. The Citronelle Formation, which is confined by this clay layer, is composed mostly of quartz sand, chert gravel, and lenses and layers of clay ranging from 0 to 300 feet thick. In Southern Mississippi, the Citronelle formation ranges from 0 to 160 feet thick (USGS, 1989). More detailed information regarding regional hydrogeology is presented in Section 2.3.5.

4.2.2 Rationale for Technical Approach The top 2 feet of the clay layer will be sampled and analyzed for potential site-related contaminants during the installation of intermediate wells and from additional borings made solely to evaluate subsurface soils. The analytical data from every clay sample will be evaluated to determine the need for the installation of as many as four deep wells around the periphery of the potential source area(s). These deep wells will be installed such that the wells monitor the source areas collectively. Locations of these wells will be approved by the USEPA and SOUTHNAVFACENGCOM prior to installation.

4.2.3 Proposed Investigation. The decision to install deep groundwater monitoring wells into the first confined aquifer (Citronelle Formation) will be based on TCL/TAL analytical results of groundwater samples that are collected from monitoring wells completed in the surficial aquifer and subsurface soil

samples collected from the top of the clay layer. Participants in the decision-making process include SOUTHNAVFACENGCOM, USEPA Region IV, MDEQ, and ABB-ES. The purpose of completing deep monitoring wells would be to evaluate groundwater in the Citronelle Formation for contaminants suspected of migrating through the confining clay layer. The confining clay layer is estimated to be 28 to 197 feet thick (Envirodyne, 1985) in the area of NCBC. The locations of the wells will be chosen based on the sites suspected of contributing contaminants.

Double-cased well construction will be used for the deep wells to avoid interconnection of the surficial aquifer and confined aquifer by well construction. Interconnection of the two aquifers could result in cross contamination. The installation of double-cased wells involves setting an outer steel casing that extends from the surface into the confining unit. After the outer casing is grouted in place (and grout has set) the borehole is advanced by drilling inside the outer casing. Should deep wells be installed, it is anticipated that both hollow-stem auger and air/wet rotary drilling will be used.

Deep wells would be constructed of 2-inch-ID, Schedule 40 PVC with 10 feet of machine-slotted standard PVC well screen. Slot size may vary dependent upon stratigraphic characterization. Deep wells will be constructed and installed in conformance with USEPA Region IV SOPs (USEPA, 1991c) and SOUTHNAVFACENGCOM guidelines (Appendix D).

If deep wells are installed, groundwater samples will be collected and analyzed in conformance with Level IV DQOs. Level III DQOs will be used for analyses not included in the CLP SOW. Laboratory analyses will probably be limited to include compounds that are suspected of being present based on results of analyses of surficial groundwater samples and subsurface soil samples that are collected during the initial phase of the RI/FS field program.

4.3 SITE 1, DISASTER RECOVERY DISPOSAL AREA.

4.3.1 Description and Background The Disaster Recovery Disposal Area is located on the northeast corner of Seventh Street and Colby Avenue. The site consists of an inactive landfill measuring approximately 400 by 1,000 feet. The site is bordered on the north by three parallel catfish ponds, on the west by Colby Avenue, and on the south by Seventh Street. One-third of each of the three catfish ponds have been filled in along their eastern ends. Prior to fill operations, three soil samples were collected from each of the ponds on 16 August 1990 and were tested for extraction procedure, toxicity characteristic metals (EP toxicity metals). Analytical results indicated that none of the samples exhibited characteristics of EP toxicity for metals (Table 4-1).

An unknown quantity of chemical wastes generated mainly by the public works shops or the Supply Department and containerized in 55-gallon drums were disposed by trench-and-fill operations at this location between 1942 to 1948. The chemical wastes disposed reportedly included paints (which may contain cadmium, chromium, and lead), oils, solvents (Stoddard, xylene, toluene, MEK, and trichloroethylene), paint strippers, and cleaning compounds. The site was subsequently covered and is now characterized by planted pine trees and grassed areas that surround roads and buildings associated with the Disaster Recovery Training.

Table 4-1 Results of Extraction Procedure Toxicity Tests of Catfish Pond Soil Samples

	South Pond			Center Pond			North Pond		
	#1	#2	#3	#1	#2	#3	#1	#2	#3
Arsenic	<0.01	<0.01	<0.01	<0.01	<0.01	<0.01	<0.01	<0.01	<0.01
Barium	0.14	0.18	0.33	0.25	0.03	0.12	0.19	0.20	0.20
Cadmium	<0.01	<0.01	<0.01	<0.01	<0.01	<0.01	<0.01	<0.01	<0.01
Chromium	<0.01	<0.01	<0.01	<0.01	<0.01	<0.01	<0.01	<0.01	<0.01
Lead	<0.01	<0.01	<0.01	<0.01	<0.01	<0.01	<0.01	<0.01	<0.01
Mercury	<0.005	<0.005	<0.005	<0.005	<0.005	<0.005	<0.005	<0.005	<0.005
Selenium	<0.01	0.01	0.02	<0.01	<0.01	<0.01	<0.01	<0.01	<0.01
Silver	<0.01	<0.01	<0.01	<0.01	<0.01	<0.01	<0.01	<0.01	<0.01

Note: Concentrations are in milligrams per liter.

Verification Study Three soil borings were completed and a monitoring well was installed in each of these borings. Four surface water samples and four sediment samples were collected and analyzed for pH, specific conductance (conductance), total organic carbon (TOC), total organic halogen (TOX), chemical oxygen demand (COD), oil and grease (O&G), cadmium (Cd), chromium (Cr), and lead (Pb). Every sediment sample showed concentrations of Cd, Cr, and Pb slightly higher than the detection limits.

One groundwater sample from each well was collected and analyzed for pH, conductance, Cd, Cr, Pb, volatile organic compounds (VOCs), and acid and base-neutral extractables (extractables). Compounds detected in groundwater samples by these analyses include Cr and Pb as follows:

GPT-1-1	Cr, 136 μg/l;	Pb, 52 μg/l
GPT-1-2	Cr, 392 μg/l;	Pb, 79 μg/l
GPT-1-3	Cr, 81 μg/l;	Pb, 66 μg/l.

A geophysical survey using a Scintrex-IGS™ was conducted at these sites. A 50-foot by 5-foot grid was used for the survey of Site 1. Areas of magnetic anomalies and VLF values detected above background are shown on Figure 2-10.

4.3.2 Rationale for Technical Approach The objectives of the RI/FS program at Site 1 are to define the location and orientation of the landfill burial trenches; to determine the composition, magnitude, and extent of potential soil and sediment contamination; to determine the composition and magnitude of potential groundwater and surface water contamination; and to determine whether an imminent hazard to human health or the environment exists.

The concentrations of chromium and lead may be inherent to the groundwater in the region. This will be evaluated by obtaining background samples, by analyzing filtered and unfiltered samples, and by analyzing TDS and TSS. Results of the Verification Study indicate that except for the concentrations of chromium and lead, there does not appear to be contamination of the shallow groundwater. However, two of the monitoring wells were installed upgradient of the landfill and only one was installed downgradient of the landfill. Additionally, monitoring well screens range from 23 to 27 feet long and may result in dilution of groundwater samples. Therefore, additional monitoring wells are needed to evaluate the status of contamination in the surficial aquifer at Site 1.

The following investigative objectives and methods are proposed to characterize Site 1.

Objective 1: to determine the location and orientation of the landfill burial trenches.

Methods: aerial photography analysis, and
geophysical surveys (magnetometer, terrain conductivity, and GPR).

Objective 2: to determine the composition, magnitude, and extent of potential soil contamination.

Methods: soil boring and subsurface soil sampling, surface soil sampling, and sediment sampling.

Objective 3: to determine the composition and magnitude of potential groundwater and surface water contamination.

Methods: sampling of existing monitoring wells, monitoring well installation and sampling, and surface water sampling.

4.3.3 Proposed Investigation The following provides descriptions of proposed investigative methods and sampling and analysis plans for Site 1, Disaster Recovery Disposal Area.

Aerial Photography Survey An aerial photography survey will be conducted, consisting of procuring, evaluating, analyzing, and interpreting available historical and recent aerial photographs to aid in the assessment of former landfill operations and the historical development of the site.

Geophysical Survey A geophysical survey consisting of magnetometer, GPR, and/or terrain conductivity will be completed. The magnetometer survey will be comprised of survey lines spaced 100 feet apart, with readings taken each 20 feet along a survey line. Figure 4-2 shows the area to be included in the magnetometer survey. Each survey line will extend beyond the anticipated limits of the site. Terrain conductivity and GPR surveys will be located to confirm magnetic anomalies suspected of indicating areas of buried metal such as drums. Geophysical results will be presented on scaled site maps. Cumulative evaluation and interpretation of data from the three geophysical methods will be used to interpret the extent, location, and orientation of the landfill.

Because Site 1 is near the location of a communications radio antenna, the geophysical survey crew should contact the activity responsible for or using the antenna to schedule site work such that potential interaction between the geophysical instruments and the antenna do not create problems.

Surface Soil Sampling Nine surface soil samples will be collected from locations within the boundaries of the disposal area at Site 1. Surface soil samples will provide information concerning potential human and ecological exposure and possible off-site transport through soil erosion.

Proposed surface soil sample locations are shown in Figure 4-2, however, actual locations will be chosen in the field based on results of the geophysical survey. Some locations will be at or near areas interpreted as disposal trenches based on geophysical data. Other locations will be selected so that sampling generally covers all areas of the site, as necessary to support the Baseline Risk Assessment. Surface soil samples will be collected from 0 to 1 foot using a hand auger or similar device. Laboratory analyses will include TCL VOCs, TCL SVOCs, TCL pesticides and PCBs, TPH, and TAL inorganics.

Subsurface Soil Sampling At Site 1, subsurface soil samples will be collected from soil borings conducted in association with monitoring well installation at the periphery of the site. Figure 4-2 shows proposed locations for soil borings

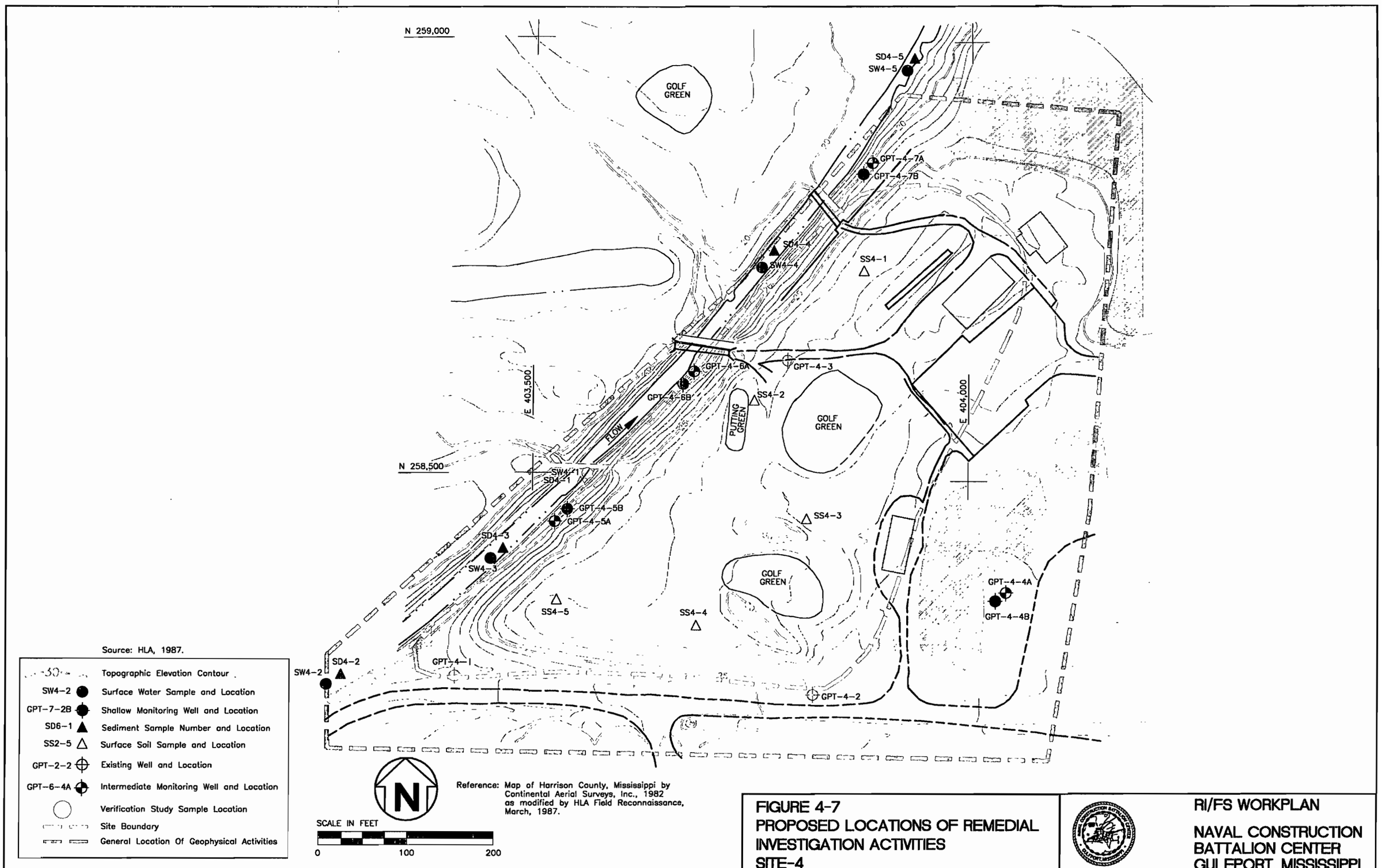

FIGURE 4-7
PROPOSED LOCATIONS OF REMEDIAL INVESTIGATION ACTIVITIES
SITE-4

RI/FS WORKPLAN

NAVAL CONSTRUCTION BATTALION CENTER
GULFPORT, MISSISSIPPI

and monitoring well installations. Because of the nature of the site (a landfill), no soil borings will be conducted within the limits of the site.

Split-spoon sampling will be conducted continuously (every 2 feet) to the water table, then every 5 feet or at facies boundaries in intermediate-depth borings associated with monitoring well pairs. Headspace analysis using an OVA will be performed in the field on all samples from the intermediate borings. Four soil samples will be selected from each intermediate boring for laboratory analysis, including the sample from the interval above the water table and the top 2-foot interval of the clay layer. Two additional samples will be selected for laboratory analysis based on results of OVA headspace analysis. The rationale for selection of subsurface soil samples for laboratory analysis based on OVA headspace analysis is included in Section 3.4.2.2 of this document. A total of 24 subsurface soil samples from six borings will be submitted for analysis of TCL VOC, TCL SVOC, TCL pesticides and PCBs, TPH, and TAL inorganics. Sampling and analysis will conform with Level IV DQOs; however, Level III DQOs will be used for TPH analyses because they are not included in the CLP SOW.

Split-spoon sampling will be conducted every 5 feet and/or at facies boundaries in shallow soil borings associated with monitoring well pairs. These samples will be used for soil classification and visual inspection only.

As many as 12 subsurface soil samples from Site 1 will be submitted for analysis of TOC for purposes of estimating soil-water partitioning coefficients. The 12 samples will represent four different facies expected of being at the site. These four facies are sand, silty sand, clayey sand, and clay. To evaluate spatial variation in organic carbon content, the samples will be collected from three boring locations. If all four facies are not represented at three locations the number of samples submitted for organic carbon content determination will decrease accordingly. The data will be used to evaluate spatial and depth variation of organic carbon, as well as variation among facies.

Three samples of the clay layer will be collected from three intermediate borings using Shelby tubes. The Shelby tubes will be sealed on each end with wax, capped, labeled, and submitted to a geotechnical laboratory for constant-head flexible-wall permeability tests using the method found in the COE *Engineering Manual 1110-2-1906* (USCOE, 1970). The laboratory permeability data will be used in conjunction with slug-test data (discussed in Section 4.10.1) and TOC data to evaluate fate and transport of potential contaminants at the site.

Monitoring Well Installation Proposed locations for groundwater monitoring wells were selected based on groundwater flow direction determined by two sets of water-level measurements obtained from three existing monitoring wells at Site 1. Figures 4-3 and 4-4 are potentiometric surface maps developed from water-level measurements collected 30 March 1987 and 31 October 1991. Groundwater flow direction at Site 1 is northwest during periods of high water table (Figure 4-3) and north-northwest during periods of low water table (Figure 4-4). Available data indicate groundwater flow in the eastern part of the site may be more northerly than in the western part of the site.

Six monitoring well pairs are proposed at Site 1. Figure 4-2 shows the proposed location of the monitoring well pairs. Each pair is comprised of a shallow well and an intermediate-depth well. Shallow wells will be constructed to intercept the water table in the screened interval. Shallow wells will be used to monitor

THIS PAGE LEFT INTENTIONALLY BLANK.

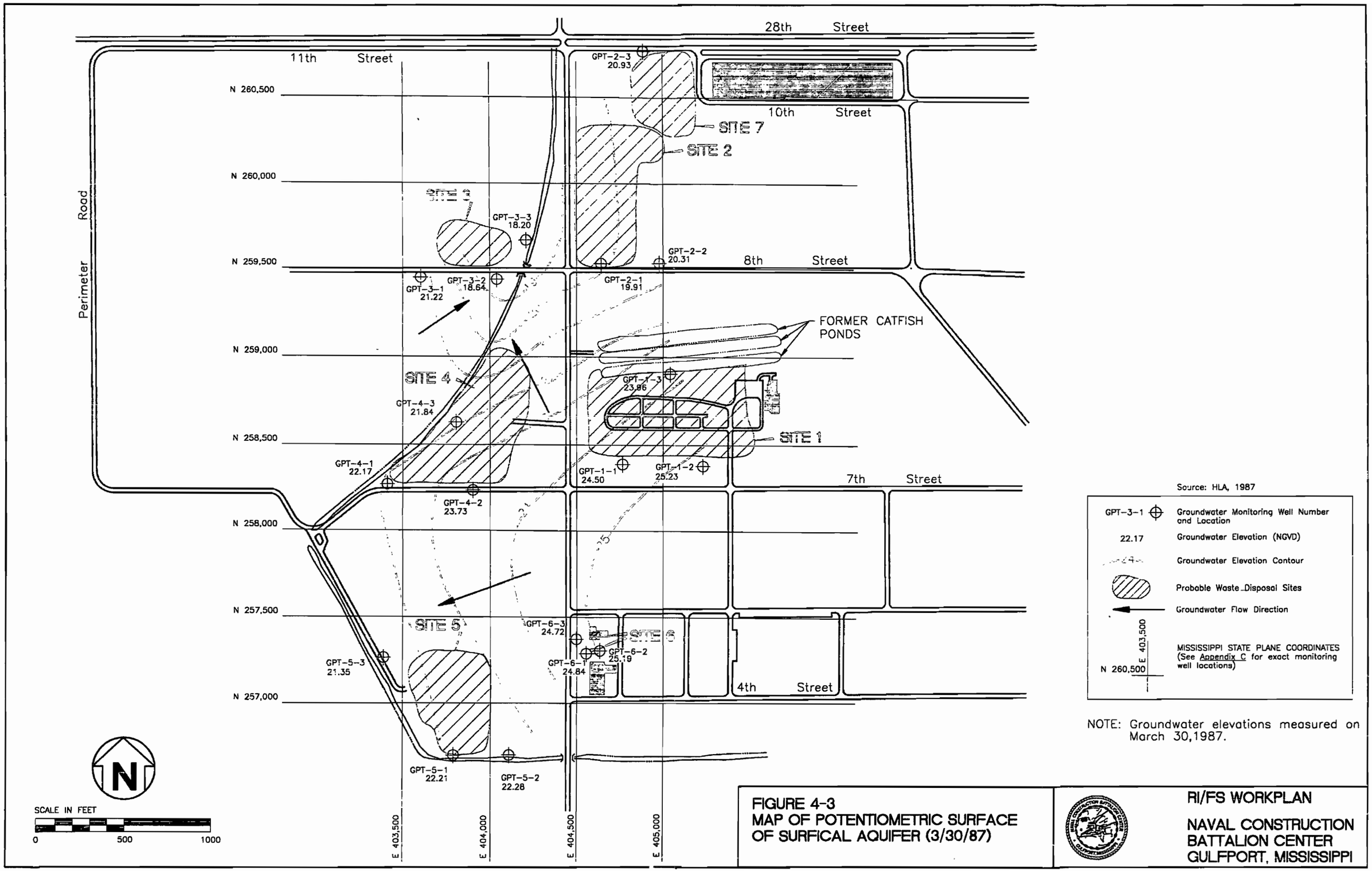

NOTE: Groundwater elevations measured on March 30,1987.

FIGURE 4-3
MAP OF POTENTIOMETRIC SURFACE OF SURFICAL AQUIFER (3/30/87)

RI/FS WORKPLAN

NAVAL CONSTRUCTION BATTALION CENTER
GULFPORT, MISSISSIPPI

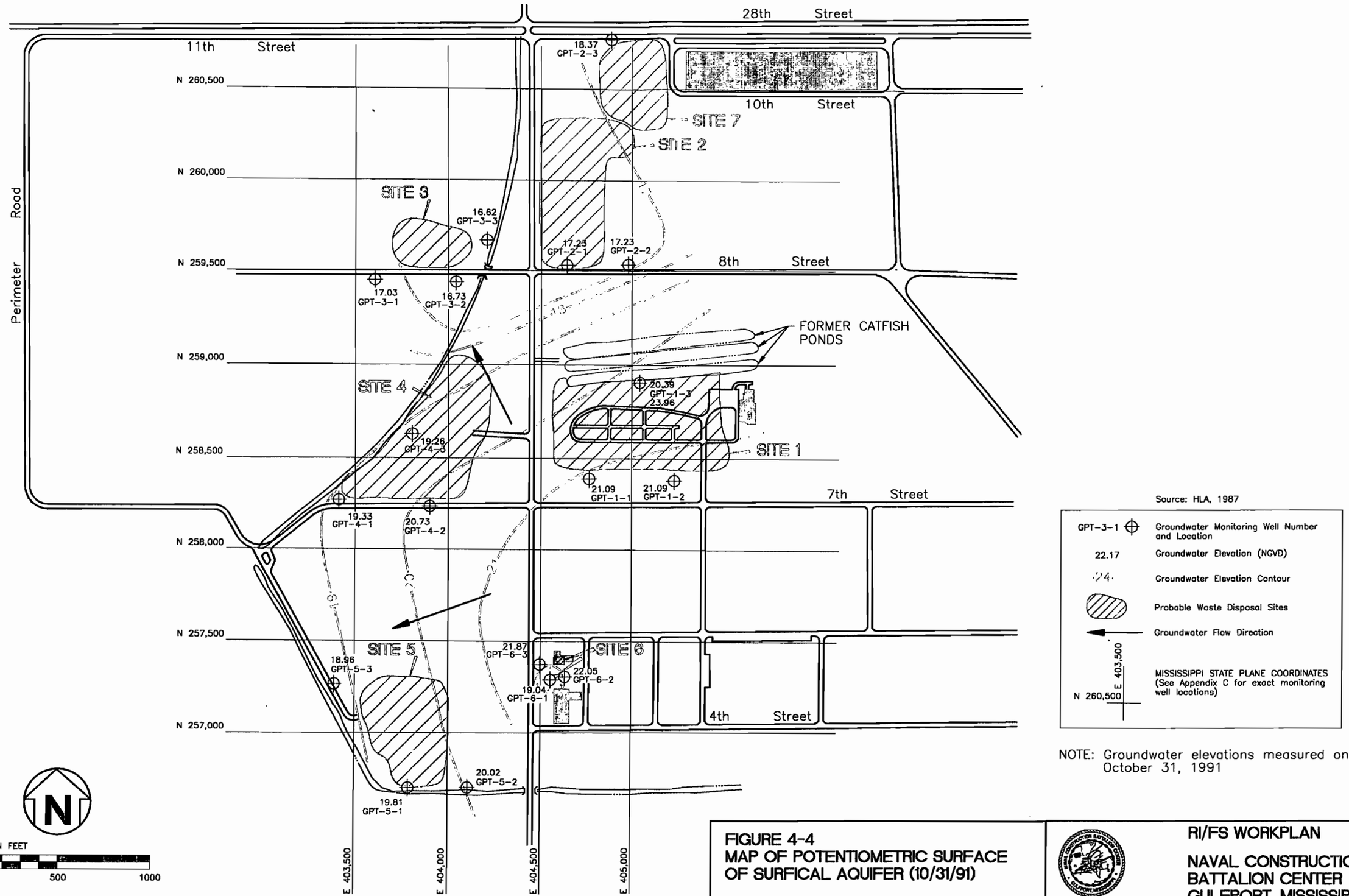

NOTE: Groundwater elevations measured on October 31, 1991

FIGURE 4-4
MAP OF POTENTIOMETRIC SURFACE OF SURFICAL AQUIFER (10/31/91)

RI/FS WORKPLAN

NAVAL CONSTRUCTION BATTALION CENTER GULFPORT, MISSISSIPPI

groundwater for free-phased floating product and detection of shallow groundwater contaminants. Intermediate-depth wells will be constructed to monitor groundwater on top of the clay layer. Intermediate-depth monitoring wells will be used to monitor groundwater for free-phase product that is denser than water and to provide information regarding vertical distribution of potential contaminants in groundwater.

Two well pairs will be located south and southeast of the site to provide information regarding upgradient groundwater conditions. Two upgradient well pairs are proposed because of the large size of the site and the variation in groundwater flow directions over time. Four downgradient well pairs will be located along the western and northern boundaries of the site. The locations of downgradient monitoring wells were selected based on the variation in groundwater flow direction over time and the need to detect potential small plumes of groundwater contamination originating from one or more burial trenches.

During the 1987 Verification Study conducted by HLA, soil borings were conducted for installation of three monitoring wells. Boring logs that were provided in the Verification Report (HLA, 1987) indicate that the depth of the clay layer ranges from 26 to 29 feet BLS at Site 1. Therefore, intermediate-depth wells installed during the RI/FS are expected to range from 26 to 29 feet BLS. Groundwater levels at Site 1 range from less than 1 foot to 6 feet BLS. Depths of shallow wells installed during the RI/FS are expected to range from 10.5 to 15 feet BLS. Actual depths of both shallow and intermediate wells will depend on site conditions at the boring locations. Actual locations of monitoring wells will depend on obtaining clearance for drilling activities and accessibility of the area to drilling equipment. Because the proposed well locations are based on knowledge of groundwater flow directions, actual well locations should be as close as possible to proposed locations.

All wells will be constructed of flush-threaded, 2-inch-ID, Schedule 40 PVC riser pipe and well screen. Justification for the use of PVC well construction material is presented in Appendix B. A well screen slot size of 0.01 inch has been chosen based on the presence of silty sand and clayey sand in the subsurface at Site 1. Well screens that are in associated well pairs should be positioned such that there is no overlap of the screened intervals. Ten-foot-long well screens will be used; however, 5-foot screens may be used in intermediate-depth wells as necessary to avoid overlap of screened intervals in associated wells of a well pair. Wells will be constructed and installed in conformance with USEPA Region IV SOPs (USEPA, 1991c) (Appendix C) and SOUTHNAVFACENGCOM guidelines (Appendix D).

Groundwater samples will be collected from all new and existing monitoring wells. Groundwater samples will be collected and analyzed in conformance with Level IV DQOs. Level III DQOs will be used for analyses not included in the CLP SOW. Groundwater samples will be analyzed for TCL VOC, TCL SVOC, TCL pesticides and PCBs, TPH, TAL inorganic compounds, TDS, and TSS. Both filtered and unfiltered groundwater samples will be submitted for TAL inorganic analyses. The TCL VOC of surface soil samples will use a low-concentration method included in the CLP SOW that has lower detection limits than the usual CLP CRQLs. The lower detection limits are similar to ARARs for some volatile organic compounds.

If the sample results of the first round of groundwater sampling indicate the presence of site-related contaminants a second-round of groundwater samples will be collected for confirmation. The analyses performed on the second round of

groundwater samples will be limited to include previously detected contaminants and will not necessarily include the entire TCL/TAL analyses. Level IV DQOs will be used for second-round groundwater analyses using CLP methods. Level III DQOs will be used for non-CLP analyses. If the analytical results of the first round of groundwater samples from Site 1 do not reveal detectable levels of any TCL chemical and all TAL inorganics are within background ranges, no further groundwater sampling will be conducted at Site 1.

Surface Water and Sediment Sampling Six surface water samples and six sediment samples (six "sets") will be collected in and adjacent to Site 1. Collection of surface water and sediment samples will be dependent upon the presence of sufficient material to sample. If sample material is not present at a proposed location, alternate sample locations will be chosen if sample material is present elsewhere in the area of interest. The purpose of sediment and surface water sampling is to provide data for evaluation of possible ecological and human exposure pathways and to assess the potential for contaminant transport.

Three sets of samples will be collected from the drainage ditch west of the site and east of Colby Avenue (Figure 4-2). One set will be collected from a location that is hydraulically upgradient of Site 1. Two sets of samples will be collected from locations that are adjacent to and downgradient of Site 1. The remaining three sets of samples will be collected from drainage ditches within the boundaries of Site 1 (Figure 4-2).

Surface water and sediment samples will be collected and analyzed in conformance with Level IV DQOs for CLP analyses and Level III for non-CLP analyses. Laboratory analyses will include TCL VOC, TCL SVOC, TCL pesticides and PCBs, TPH, and TAL inorganic compounds. In addition, surface water samples will be analyzed for TAL inorganic compounds, TDS, and TSS. Both filtered and unfiltered surface water samples will be submitted for TAL inorganic analyses. The TCL volatile organic analysis of surface water samples will use a low-concentration method. A low level CLP analysis is preferred (1991 SOW) because surface water ARARs are commonly below the CRQL associated with the 1988 CLP SOW.

4.4 SITE 2, WW II LANDFILL.

4.4.1 Description and Background The WWII Landfill is located on the northeastern corner of Eighth Street and Colby Avenue. The site consists of an inactive landfill measuring approximately 600 by 800 feet, bordered on the west by Colby Avenue and on the south by Seventh Street. Site 7 is located just northeast of Site 2.

The WW II Landfill was active from 1942 to 1948, during the same time period as Site 1. Site 2 was used primarily for the disposal of an unknown quantity of general refuse and inert material such as paper, cardboard, wood, and garbage generated at the installation. Additionally, liquid wastes were disposed at the site that reportedly included paints (which may contain cadmium, chromium, and lead), paint thinners, solvents, oils, and fuels. A former structure located at the northern end of the site was used for burning of combustible materials. The ash and noncombustible materials were then disposed using trench-and-fill operations. The site was subsequently covered and planted with pine trees that now occupy the site. The site is presently densely vegetated with pines and underbrush.

Verification Study Sites 2 and 7 were investigated as one site for the purposes of groundwater monitoring and surface water and sediment sampling during the Verification Study. Three soil borings were completed and a monitoring well was installed in each of these borings to monitor Sites 2 and 7, combined. One surface water sample and one sediment sample were collected and analyzed for pH, conductance, TOC, TOX, COD, O&G, Cd, Cr, and Pb (Table 2-5). The sediment sample contained lead at a concentration of 4.9 mg/kg and chromium at a concentration of 4.7 mg/kg. One groundwater sample from each well was collected and analyzed for pH, conductance, Cd, Cr, Pb, VOC, and SVOC (Table 2-5). Compounds detected in groundwater samples by these analyses include Cr and Pb as follows:

GPT-2-1	Cr, 26 μg/l;	Pb, 20 μg/l
GPT-2-2	Cr, 73 μg/l;	Pb, 41 μg/l
GPT-2-3	Cr, 21 μg/l;	Pb, 13 μg/l.

Additionally, elevated concentrations of 1,2-trans-dichloroethylene (37 μg/l), trichloroetheylene (5 μg/l), and bis(2-ethylhexyl)phthalate (21 μg/l) were detected in samples from GPT-2-3. This well is north of Site 7.

A geophysical survey using a Scintrex-IGS™ was conducted at the site. A 50-foot by 50-foot grid was used for the survey of Site 2. Areas of magnetic anomalies and VLF values detected above background are shown on Figure 2-11.

4.4.2 Rationale for Technical Approach The objectives of the RI/FS program at Site 2 are to define the location and orientation of the landfill burial trenches; to determine the composition, magnitude, and extent of potential soil and sediment contamination; to determine the composition and magnitude of potential groundwater and surface water contamination; and to determine whether an imminent hazard to human health or the environment exists.

The concentrations of chromium and lead may be inherent to the groundwater in the region or may be the consequence of analyzing turbid samples. This will be evaluated by obtaining background groundwater samples, by analyzing filtered and unfiltered samples, and by analyzing total dissolved solids and total suspended solids. The status of contamination of the surficial aquifer, based on the concentrations of 1,2-trans-dichloroethene, trichloroethylene, and bis(2-ethylhexyl)phthalate in samples from GPT-2-3 cannot be evaluated based on results of the Verification Study alone. The concentrations of the organic compounds were only detected in one of the wells (GPT-2-3) and only one of the three monitoring wells is suspected of being downgradient of the landfill. The three wells are insufficient for determining groundwater flow direction in the area of Site 2 and Site 7. Therefore, there currently are not a sufficient number of monitoring wells at the site to evaluate the status of contamination of the surficial aquifer.

During this remedial investigation program, Sites 2 and 7 will be investigated as two separate entities. The following investigative objectives and methods are proposed to characterize Site 2.

Objective 1: to determine the location and orientation of the landfill burial trenches.

Methods:	aerial photography analysis, and geophysical surveys (magnetometer, terrain conductivity and ground-penetrating radar)
Objective 2:	to determine the composition, magnitude, and extent of potential soil contamination.
Methods:	soil boring and subsurface soil sampling, surface soil sampling, and sediment sampling.
Objective 3:	to determine the composition and magnitude of potential groundwater and surface water contamination.
Methods:	sampling of existing monitoring wells, monitoring well installation and sampling, and surface water sampling.

4.4.3 Proposed Investigation The following provides descriptions of proposed investigative methods and sampling and analysis plans for Site 2, WWII Landfill.

Aerial Photography Survey An aerial photography survey will be conducted, consisting of procuring, evaluating, analyzing, and interpreting available historical and recent aerial photographs to aid in the assessment of former landfill operations and the historical development of the site.

Geophysical Survey A geophysical survey consisting of magnetometer, GPR, and/or terrain conductivity transects will be completed. The magnetometer survey will be comprised of survey lines spaced 100 feet apart, with readings taken each 20 feet along a survey line. Figure 4-5 shows the area to be included in the magnetometer survey. Each survey line will extend beyond the anticipated limits of the site. Terrain conductivity and GPR surveys will be located to confirm magnetic anomalies suspected of indicating areas of buried metal such as drums. Geophysical results will be presented on scaled site maps. Cumulative evaluation and interpretation of data from the three geophysical methods will be used to interpret the extent, location, and orientation of the landfill.

Surface Soil Sampling Eleven surface soil samples will be collected from locations within the boundaries of the disposal area at Site 2. Surface soil samples will provide information concerning potential human and ecological exposure and possible off-site transport through soil erosion.

Proposed surface soil sample locations are shown in Figure 4-5. Actual locations will be chosen in the field based on results of the geophysical survey. Some locations will be at or near areas interpreted as disposal trenches based on geophysical data. Other locations will be selected so that sampling generally covers all areas of the site, as necessary to support the Baseline Risk Assessment. Surface soil samples will be collected from the surface to 1-foot depth using a hand auger or similar device. Laboratory analyses will include TCL VOC, TCL SVOC, TCL pesticides and PCBs, TPH, and TAL inorganic compounds.

Subsurface Soil Sampling At Site 2, subsurface soil samples will be collected from soil borings conducted in association with monitoring well installation at the periphery of the site. Figure 4-5 shows proposed locations for soil borings

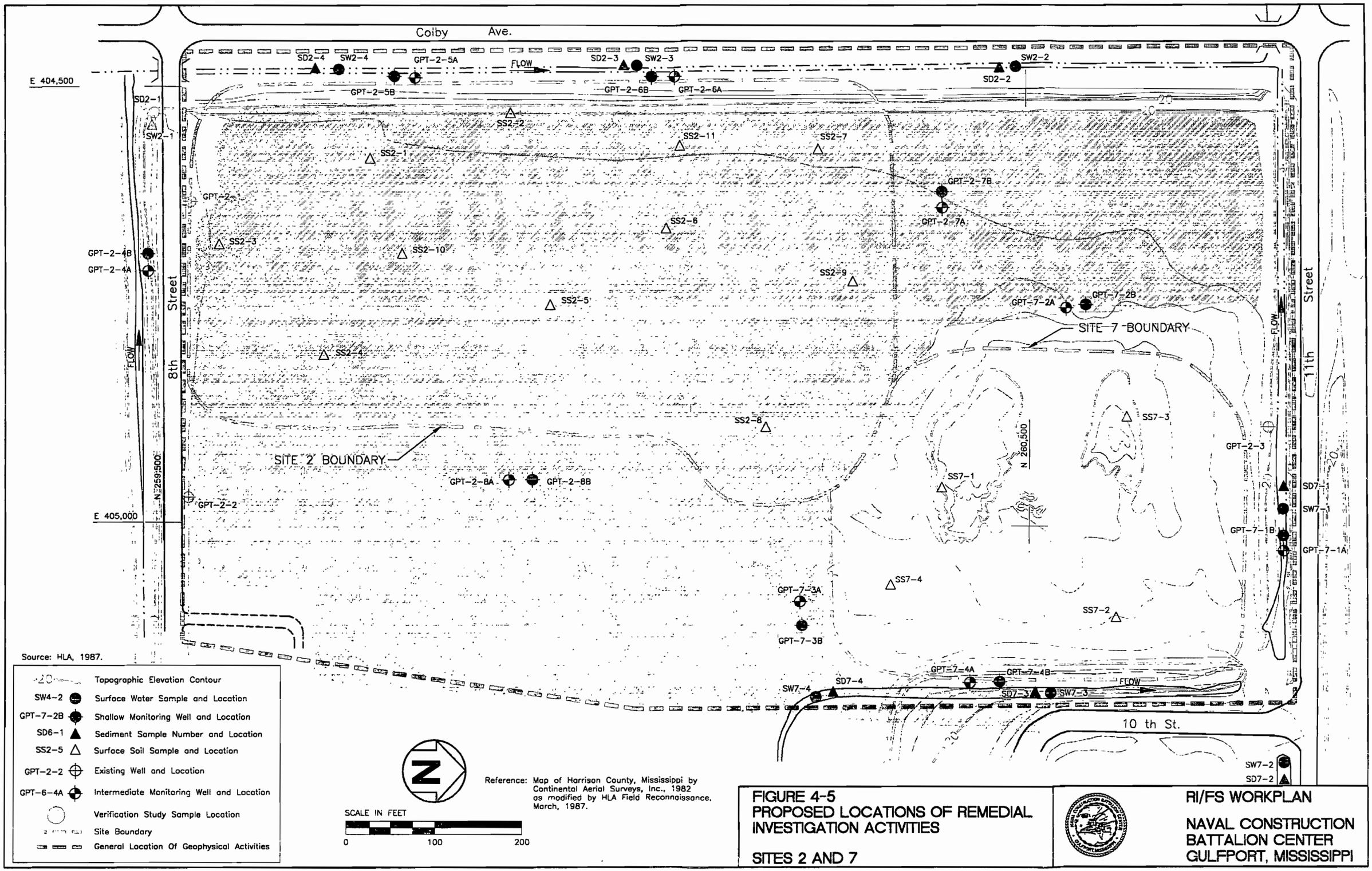

Source: HLA, 1987.

Reference: Map of Harrison County, Mississippi by Continental Aerial Surveys, Inc., 1982 as modified by HLA Field Reconnaissance, March, 1987.

FIGURE 4-5
PROPOSED LOCATIONS OF REMEDIAL INVESTIGATION ACTIVITIES

SITES 2 AND 7

RI/FS WORKPLAN

NAVAL CONSTRUCTION BATTALION CENTER
GULFPORT, MISSISSIPPI

and monitoring well installations. The purpose of this sampling is to determine whether subsurface soils at the periphery of the site have been impacted by past waste disposal. Because of the nature of the site (a landfill) borings will not be conducted within the limits of the site.

Split-spoon sampling will be conducted continuously (every 2 feet) to the water table then every 5 feet (or at facies boundaries) in intermediate-depth borings associated with monitoring well pairs. Headspace analysis using an OVA will be performed in the field on all samples from the intermediate borings. Four soil samples will be selected from each intermediate boring for laboratory analysis, including the sample from the interval above the water table and the top 2-foot interval of the clay layer. Two additional samples will be selected for laboratory analysis based on results of OVA headspace analysis. The rationale for selecting subsurface soil samples for laboratory analysis based on OVA headspace analysis is included in Section 3.4.2.2 of this document. Twenty subsurface soil samples from five borings will be submitted for analysis of TCL VOC, TCL SVOC, TCL pesticides and PCBs, TPH, and TAL inorganic compounds. Sampling and analysis will conform with Level IV DQOs, except that Level III DQOs will be used for TPH analyses because this analyte is not included in the CLP SOW.

Split-spoon sampling will be conducted every 5 feet and/or at facies boundaries in shallow soil borings associated with monitoring well pairs. These samples will be used for soil classification and visual inspection only.

As many as 12 subsurface soil samples from Site 2 will be submitted for analysis of TOC for purposes of estimating soil-water partitioning coefficients. The 12 samples will represent four different facies expected of being at the site. These four facies are sand, silty sand, silt, and clay. To evaluate spatial variation in organic carbon content, the samples will be collected from three boring locations. If all four facies are not represented at three locations, the number of samples submitted for organic carbon content determination will decrease accordingly. The data will be used to evaluate spatial and depth variations of organic carbon, as well as variation among facies.

Three samples of the clay layer will be collected from three intermediate borings using Shelby tubes. The Shelby tubes will be sealed on each end with wax, capped, labeled, and submitted to a geotechnical laboratory for constant-head flexible-wall permeability tests using the method found in the COE *Engineering Manual 1110-2-1906* (USCOE, 1970). The laboratory permeability data will be used in conjunction with slug-test data (discussed in Section 4.10.1) and TOC data to evaluate fate and transport of potential contaminants at the site.

<u>Installation of Monitoring Well</u> Proposed locations for groundwater monitoring wells were selected based on groundwater flow direction determined by two sets of water-level measurements obtained from two existing monitoring wells at Site 2 and a third existing monitoring well at Site 7. Figures 4-3 and 4-4 are potentiometric surface maps developed from water-level measurements collected 30 March 1987, and 31 October 1991. Groundwater flow direction at Site 2 is not well defined. The three wells at Sites 2 and 7 are insufficient for determining groundwater flow directions with certainty. Therefore, the need to define groundwater flow direction at Site 2 was considered in selection of proposed locations for monitoring well installation during the RI/FS.

Five monitoring well pairs are proposed at Site 2. Figure 4-5 shows the proposed locations of the monitoring well pairs. Each pair is comprised of a shallow well and an intermediate-depth well. Shallow wells will be constructed to intercept the water table in the screened interval. Shallow wells will be used to monitor groundwater for free-phase floating product and detection of shallow groundwater contaminants. Intermediate-depth wells will be constructed to monitor groundwater on top of the clay layer. Intermediate-depth monitoring wells will be used to monitor groundwater for free-phase product that is denser than water and to provide information regarding vertical distribution of potential contaminants in groundwater.

Two well pairs will be installed along the western periphery of the site and are expected to be downgradient monitoring wells. One well pair will be installed along each of the remaining three sides of the site. The locations for the five well pairs were selected in consideration of the proximity of Site 2 to Site 7; the potential for contaminated groundwater from Site 1 to migrate towards Site 2; the need to better define groundwater flow directions in the area of Site 2; and the presence of chlorinated solvents in groundwater from existing well GPT-2-3, which was sampled during the Verification Study (March 1987). Additionally, monitoring well locations were selected based on the potential for small plumes of contaminated groundwater because of contaminant releases from one or more disposal trenches.

During the 1987 Verification Study conducted by HLA, soil borings were conducted for installation of three monitoring wells. Boring logs that were provided in the Verification Study report (HLA, 1987) indicate that the depth of the clay layer ranges from 13 to 30 feet BLS at Site 2. Intermediate-depth wells installed in areas where the clay layer is relatively close to the surface of the water table may not require a corresponding shallow well to monitor for shallow or floating contaminants. Monitoring well installations at locations where the clay is relatively shallow may result in completion of only one well; or require the use of 5-foot well screens in the intermediate-depth well; or completing the intermediate well with a portion of the screen in the clay. These determinations will be made in the field on a case-by-case basis.

Groundwater levels at Site 2 range from 1.2 to 5.6 feet BLS. Depths of shallow wells installed at Site 2 during the RI/FS are expected to range from 10.5 to 14.5 feet BLS.

Actual depths of both shallow and intermediate wells will depend on site conditions at the boring locations. Actual locations of monitoring wells will depend on obtaining clearance for drilling activities and accessibility of the area to drilling equipment.

All wells will be constructed of flush-threaded, 2-inch-ID, Schedule 40 PVC riser pipe and well screen. Justification for the use of PVC well construction material is presented in Appendix C. A well screen slot size of 0.01 inch has been chosen based on the presence of silt and sand in the subsurface at Site 2. Well screens that are in associated well pairs should be positioned such that there is no overlap of the screened intervals. Ten-foot-long well screens will be used; however, 5-foot screens may be used in intermediate-depth wells as necessary to avoid overlap of screened intervals in associated wells of a well pair. Wells will be constructed and installed in conformance with USEPA Region IV SOPs (USEPA, 1991c) (Appendix C) and SOUTHNAVFACENGCOM guidelines (Appendix D).

Groundwater samples will be collected from all new and existing monitoring wells. Groundwater samples will be collected and analyzed in conformance with Level IV DQOs for CLP analyses and Level III DQOs for non-CLP analyses. Groundwater samples will be analyzed for TCL VOC, TCL SVOC, TCL pesticides and PCBs, TPH, TAL inorganic compounds, TDS, and TSS. Both filtered and unfiltered groundwater samples will be submitted for TAL inorganic analyses. The TCL volatile organic analysis of groundwater samples will use a low-concentration method included in the CLP SOW that has lower detection limits than the usual CLP CRQLs. The lower detection limits are similar to ARARs for some volatile organic compounds.

If the sample results of the first round of groundwater sampling indicate the presence of site-related contaminants, a second round of groundwater samples will be collected for confirmation. The analyses that are performed on the second round of groundwater samples will be limited to include previously detected contaminants and will not necessarily include the entire TCL/TAL analyses. Level IV DQOs will be used for second-round groundwater analyses using CLP methods and Level III DQOs will be used for non-CLP analyses. If the analytical results of the first round of groundwater samples from Site 2 do not reveal detectable levels of any TCL chemical and all TAL inorganics are within background ranges, no further groundwater sampling will be conducted at Site 2.

Surface Water and Sediment Sampling A total of three surface water samples and three sediment samples (three "sets") will be collected from the drainage ditch west of Site 2 (Figure 4-5). Collection of surface water and sediment samples will be dependent upon the presence of sufficient material to sample. If sample material is not present at a proposed location, alternate sample locations will be chosen if sample material is present elsewhere in the area of interest.

The purposes of sediment and surface water sampling are to provide data for evaluation of possible ecological and human exposure pathways and to assess the potential for contaminant transport.

Three sets of samples will be collected from the drainage ditch west of the site and east of Colby Avenue. One set will be collected from a location hydraulically upgradient of Site 2. Two sets of samples will be collected from locations adjacent to Site 2.

Surface water and sediment samples will be collected and analyzed in conformance with Level IV DQOs, except that Level III DQOs will be used for parameters not included in the CLP SOW. Laboratory analyses will include TCL VOC, TCL SVOC, TCL pesticides and PCBs, TPH, and TAL inorganic compounds. In addition, surface water samples will be analyzed for TAL inorganics, TDS, and TSS. Both filtered and unfiltered surface water samples will be submitted for inorganic analyses. The TCL volatile organic analysis of surface water samples will use a low-concentration method. A low level CLP analysis is preferred (1991 SOW) because surface water ARARs are commonly below the CRQL associated with the 1988 CLP SOW.

4.5 SITE 3, NORTHWEST LANDFILL AND BURN PIT.

4.5.1 Description and Background The Northwest Landfill and Burn Pit are located on the northwestern corner of the intersection of Eighth Street and Canal No. 1. The site consists of an inactive landfill measuring approximately 650 by 240 feet. The site is bordered on the south by Eighth Street, on the east by

Canal No. 1, and wooded areas to the north and west. Additionally, a burn pit was located on the northwestern side of Site 3.

An estimated 30,000 tons of solid waste and an unknown quantity of other liquid wastes such as fuels, oils, solvents (Stoddard, xylene, toluene, and MEK), paints, and paint strippers were disposed in the landfill. The disposal operations consisted of transporting wastes to the burn pit on the site, igniting them with diesel fuel, then pushing the ash and remaining material into the trenches and covering them with soil. The landfill itself was in operation from 1948 to the mid-1960s. The pit was used from the mid-1950s to 1965 for fire-fighting training. Throughout the life of the burn pit, an estimated 130,000 gallons of flammable liquids such as waste fuels, oils, solvents, paints, and paint thinners were burned at the site.

The burn pit was filled in with soil upon closure of the landfill in 1965. The location of the pit is no longer apparent at the site. Although bordered by trees and vegetation, the site itself has little vegetation because of on-going training activities such as dismantling of tents, towers, and other structures.

Verification Study Three soil borings were completed and a monitoring well was installed in each of these borings. One surface water sample and one sediment sample were collected and analyzed for pH, conductance, TOC, TOX, COD, O&G, Cd, Cr, and Pb. Analytical results are presented in Table 2-9. The sediment sample contained lead at a concentration of 6.8 mg/kg and chromium at a concentration of 5.0 mg/kg. One groundwater sample from each well was collected and analyzed for pH, conductance, Cd, Cr, Pb, volatile organic compounds, and semivolatile organic compounds. Analytical results are presented in Table 2-9. Compounds detected in groundwater include Cr and Pb as follows:

GPT-3-1	Cr, 40 μg/l;	Pb, 26 μg/l
GPT-3-2	Cr, 71 μg/l;	Pb, 35 μg/l
GPT-1-3	Cr, 45 μg/l;	Pb, 17 μg/l.

A geophysical survey using a Scintrex-IGS™ was conducted at the site. A 50-foot by 50-foot grid was used for the survey of Site 3. Areas of magnetic anomalies and VLF values detected above background are shown on Figure 2-12.

4.5.2 Rationale for Technical Approach The objectives of the RI/FS program at Site 3 are to define the location and orientation of the landfill burial trenches and burn pit; to determine the composition, magnitude, and extent of potential soil and sediment contamination; to determine the composition and magnitude of potential groundwater and surface water contamination; and to determine whether an imminent hazard to human health or the environment exists.

The concentrations of chromium and lead may be inherent to the groundwater in the region or maybe a consequence of analyzing turbid samples. This will be evaluated by obtaining background samples, by analyzing filtered and unfiltered samples, and by analyzing TDS and TSS. The Verification Study indicated that except for the concentrations of chromium and lead, there was no apparent contamination of the shallow groundwater. However, two of the monitoring wells were installed upgradient of the landfill and only one was installed downgradient of the landfill. Additionally, the monitoring well screens range from 23 to 26 feet long and may cause dilution of groundwater samples. Therefore, additional

wells are needed to evaluate the status of contamination of groundwater in the surficial aquifer at Site 3.

The following investigative objectives and methods are proposed to characterize Site 3.

Objective 1:	to determine the location and orientation of the landfill burial trenches and burn pit.
Methods:	aerial photography analysis, and geophysical surveys (magnetometer, terrain conductivity, and ground-penetrating radar).
Objective 2:	to determine the composition, magnitude, and extent of potential soil and sediment contamination.
Methods:	soil boring and subsurface soil sampling, surface soil sampling, and sediment sampling.
Objective 3:	to determine the composition and magnitude of potential groundwater and surface water contamination.
Methods:	sampling of existing monitoring wells, monitoring well installation and sampling, and surface water sampling.

4.5.3 Proposed Investigation The following provides descriptions of proposed investigative methods and sampling and analysis plans for Site 3, Northwest Landfill and Burn Pit.

Aerial Photography Survey An aerial photography survey will be conducted, consisting of procuring, evaluating, analyzing, and interpreting available historical and recent aerial photographs to aid in the assessment of former landfill operations and the historical development of the site.

Geophysical Survey A geophysical survey consisting of magnetometer, GPR, and/or terrain conductivity transects will be completed. The magnetometer survey will be comprised of survey lines spaced 100 feet apart, with readings taken each 20 feet along a survey line. Figure 4-6 shows the area to be included in the magnetometer survey. Each survey line will extend beyond the anticipated limits of the site. Terrain conductivity and GPR surveys will be located to confirm magnetic anomalies suspected of indicating areas of buried metal such as drums. Geophysical results will be presented on scaled Site maps. Cumulative evaluation and interpretation of data from the three geophysical methods will be used to interpret the extent, location, and orientation of the landfill.

Surface Soil Sampling Five surface soil samples will be collected from locations within the boundaries of the disposal area at Site 3. Surface soil samples will provide information concerning potential human and ecological exposure and possible off-site transport through soil erosion.

THIS PAGE LEFT INTENTIONALLY BLANK.

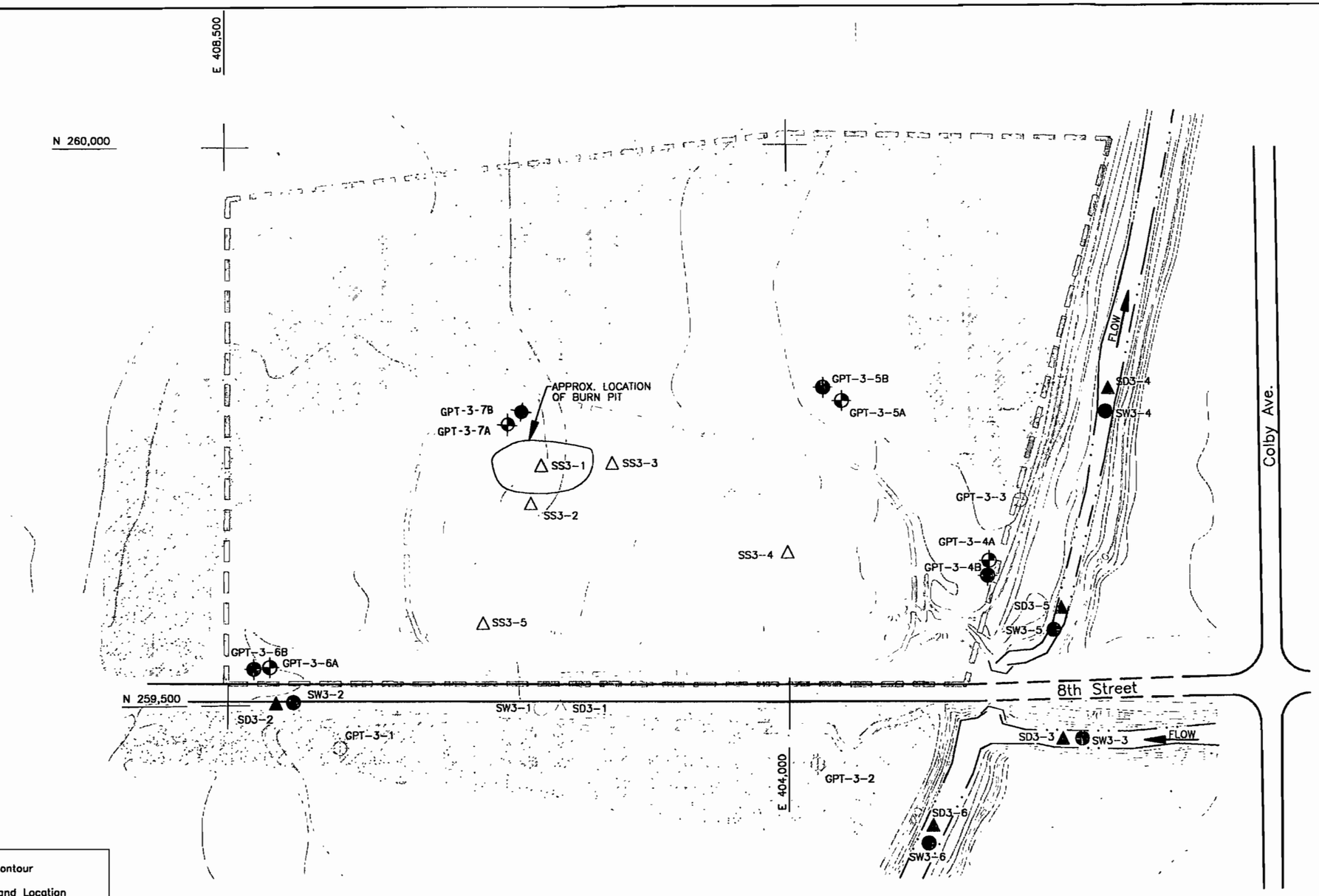

Source: HLA, 1987.

20	Topographic Elevation Contour
SW4-2	Surface Water Sample and Location
GPT-7-2B	Shallow Monitoring Well and Location
SD6-1	Sediment Sample Number and Location
SS2-5	Surface Soil Sample and Location
GPT-2-2	Existing Well and Location
GPT-6-4A	Intermediate Monitoring Well and Location
	Verification Study Sample Location
	Site Boundary
	General Location Of Geophysical Activities

N

SCALE IN FEET

0 100 200

Reference: Map of Harrison County, Mississippi by Continental Aerial Surveys, Inc., 1982 as modified by HLA Field Reconnaissance, March, 1987.

FIGURE 4-6
PROPOSED LOCATIONS OF REMEDIAL INVESTIGATION ACTIVITIES

SITE-3

RI/FS WORKPLAN

NAVAL CONSTRUCTION BATTALION CENTER
GULFPORT, MISSISSIPPI

Proposed surface soil sample locations are shown in Figure 4-6. Actual locations will be chosen in the field based on results of the geophysical survey. Some locations will be at or near areas interpreted as disposal trenches based on geophysical data. Other locations will be selected so that sampling generally covers all areas of the site, as necessary to support the Baseline Risk Assessment. Surface soil samples will be collected from the surface to 1-foot depth using a hand auger or similar device. Laboratory analyses will include TCL VOC, TCL SVOC, TCL pesticides and PCBs, TPH, and TAL inorganic compounds.

Subsurface Soil Sampling At Site 3, subsurface soil samples will be collected from soil borings conducted in association with monitoring well installation at the periphery of the site. Figure 4-6 shows proposed locations for soil borings and monitoring well installations. The purpose of this sampling is to determine whether subsurface soils at the periphery of the site have been impacted by past waste disposal. Because of the nature of the site (a landfill) borings will not be conducted within the limits of the site.

Split-spoon sampling will be conducted continuously (every 2 feet) to the water table then every 5 feet (or at facies boundaries) in intermediate-depth borings associated with monitoring well pairs. Headspace analysis using an OVA will be performed in the field on all samples from the intermediate borings. Four soil samples will be selected from each intermediate boring for laboratory analysis, including the sample from the interval above the water table and the top 2-foot interval of the clay layer. Two additional samples will be selected for laboratory analysis based on results of OVA headspace analysis. Rationale for selection of subsurface soil samples for laboratory analysis based on OVA headspace analysis is included in Section 3.4.2.2 of this document. Twelve subsurface soil samples from three borings will be submitted for analysis of TCL VOC, TCL SVOC, TCL pesticides and PCBs, TPH, and TAL inorganic compounds. Sampling and analysis will conform with Level IV DQOs; however, Level III DQOs will be used for analyses not included in the CLP SOW.

Split-spoon sampling will be conducted every 5 feet and/or at facies boundaries in shallow soil borings associated with monitoring well clusters. These samples will be used for soil classification and visual inspection only.

As many as nine subsurface soil samples from Site 3 will be submitted for analysis of TOC for purposes of estimating soil-water partitioning coefficients. The nine samples will represent three different facies expected of being at the site. These three facies are sand, silty sand, and clay. To evaluate spatial variation in organic carbon content, the samples will be collected from three boring locations. If all three facies are not represented at three locations the number of samples submitted for organic carbon content determination will decrease accordingly. The data will be used to evaluate spatial and depth variations of organic carbon, as well as variation among facies.

Three samples of the clay layer will be collected from three intermediate borings using Shelby tubes. The Shelby tubes will be sealed on each end with wax, capped, labeled, and submitted to a geotechnical laboratory for constant-head flexible-wall permeability tests using the method found in COE *Engineering Manual 1110-2-1906* (USCOE, 1970). The laboratory permeability data will be used in conjunction with slug-test data (discussed in Section 4.10.1) and TOC data to evaluate fate and transport of potential contaminants at the site.

Monitoring Well Installation Proposed locations for groundwater monitoring wells were selected based on groundwater flow direction determined by two sets of water-level measurements obtained from three existing monitoring wells at Site 3. Figures 4-3 and 4-4 are potentiometric surface maps developed from water-level measurements collected 30 March 1987, and 31 October 1991.

Four monitoring well pairs are proposed at Site 3. Figure 4-6 shows the proposed locations of the monitoring well pairs. Each pair is comprised of a shallow well and an intermediate-depth well. Shallow wells will be constructed to intercept the water table in the screened interval. Shallow wells will be used to monitor groundwater for free-phase floating product and detection of shallow groundwater contaminants. Intermediate-depth wells will be constructed to monitor groundwater on top of the clay layer. Intermediate-depth monitoring wells will be used to monitor groundwater for free-phase product that is denser than water and to provide information regarding vertical distribution of potential contaminants in groundwater.

Two well pairs will be installed along the northeastern and eastern periphery of the site to monitor groundwater downgradient of the site. One well pair will be installed at the southwestern corner of the site. One well pair will be installed on the northside of the burn area. The locations for the four wells pairs were selected in consideration of the proximity of Site 3 to Site 2; the potential for contaminated groundwater from Site 2 to migrate towards Site 3; and the groundwater flow direction in the area of Site 3. Additionally, monitoring well locations were selected based on the potential for small plumes of contaminated groundwater because of releases from one or more disposal trenches.

During the 1987 Verification Study conducted by HLA, soil borings were conducted for installation of three monitoring wells. Boring logs that were provided in the Verification Study report (HLA, 1987) indicate that depth of the clay layer ranges from 15.4 to 27.5 feet BLS at Site 3. Intermediate-depth wells installed in areas where the clay layer is relatively close to the surface of the water table may not require a corresponding shallow well to monitor for shallow or floating contaminants. Monitoring well installations at locations where the clay is relatively shallow may result in completion of only one well; or require the use of 5-foot well screens in the intermediate-depth well; or completing the intermediate well with a portion of the screen in the clay. These determinations will be made in the field on a case-by-case basis.

Groundwater levels at Site 3 range from 2 to 6 feet BLS. Depths of shallow wells installed at Site 3 during the RI/FS are expected to range from 11 to 15 feet BLS.

Actual depths of both shallow and intermediate wells will depend on site conditions at the boring locations. Actual locations of monitoring wells will depend on obtaining clearance for drilling activities and accessibility of the area to drilling equipment.

All wells will be constructed of flush-threaded, 2-inch-ID, Schedule 40 PVC riser pipe and well screen. Justification for the use of PVC well construction material is presented in Appendix B. A well screen slot size of 0.01 inch has been chosen based on the presence of silty sand and sand in the subsurface at Site 3. Well screens in associated well pairs should be positioned such that there is no overlap of the screened intervals. Ten-foot-long well screens will be used; however, 5-foot screens may be used in intermediate-depth wells as

necessary to avoid overlap of screened intervals in associated wells of a well pair. Wells will be constructed and installed in conformance with USEPA Region IV SOPs (USEPA, 1991c) (Appendix C) and SOUTHNAVFACENGCOM guidelines (Appendix D).

Groundwater samples will be collected from all new and existing monitoring wells. Groundwater samples will be collected and analyzed in conformance with Level IV DQOs, with the exception of non-CLP analyses, which will be done using Level III DQOs. Groundwater samples will be analyzed for TCL VOC, TCL SVOC, TCL pesticides and PCBs, TPH, TAL inorganic compounds, TDS and TSS. Both filtered and unfiltered groundwater samples will be submitted for TAL inorganic analyses. The TCL volatile organic analysis of groundwater samples will use a low concentration method included in the CLP SOW that has lower detection limits than the usual CLP CRQLs. The lower detection limits are similar to ARARs associated with some volatile organic compounds.

If the sample results of the first round of groundwater sampling indicate the presence of site-related contaminants, a second round of groundwater samples will be collected for confirmation. The analyses performed on the second round of groundwater samples will be limited to include previously detected contaminants and will not necessarily include the entire TCL/TAL analyses. Level IV DQOs will be used for second-round groundwater analyses included in the CLP SOW. Non-CLP analyses will be done using Level III DQOs. If the analytical results of the first round of groundwater samples from Site 3 do not reveal detectable levels of site-related organics and all inorganics are within background ranges, no further groundwater sampling will be conducted at Site 3.

Surface Water and Sediment Sampling Four surface water samples and four sediment samples (four "sets") will be collected from Canal No. 1 east of Site 3 and a tributary entering Canal No. 1 from the east. Collection of surface water and sediment samples will be dependent upon the presence of sufficient material to sample. If sample material is not present at a proposed location, alternate sample locations will be chosen if sample material is present elsewhere in the area of interest.

The purposes of sediment and surface water sampling are to provide data for evaluation of possible ecological and human exposure pathways and to assess the potential for contaminant transport.

Three sets of samples will be collected from Canal No. 1 east of the site and west of Colby Avenue. One set will be collected from a location hydraulically upgradient of Site 3 (Figure 4-6). Two sets of samples will be collected from Canal No. 1 at locations adjacent to and downgradient of Site 3. One set of samples will be collected from a tributary to Canal No. 1, entering the canal from the east. These samples will provide information regarding contribution of potential contaminants from other areas.

Surface water and sediment samples will be collected and analyzed in conformance with Level IV DQOs for CLP parameters and Level III DQOs for non-CLP parameters. Laboratory analyses will include TCL VOC, TCL SVOC, TCL pesticides and PCBs, TPH, and TAL inorganics. In addition, surface water samples will be analyzed for TAL inorganics, TDS, and TSS. Both filtered and unfiltered surface water samples will be submitted for TAL inorganic analyses. The TCL volatile organic analysis of surface water samples will use a low-concentration method. A low level CLP

analysis is preferred (1991 SOW) because surface water ARARs are commonly below the CRQL associated with the 1988 CLP SOW.

4.6 SITE 4, GOLF COURSE LANDFILL.

4.6.1 Description and Background The Golf Course Landfill is located northeast of the intersection of Seventh Street and Canal No. 1. The site consists of an inactive landfill encompassing a trapezoidal area of approximately 4 acres. The site is bordered on the south by Seventh Street and on the west by Canal No. 1. A practice putting green, the No. 9 green, and the No. 1 tee are now located at this site.

An estimated 16,000 tons of solid waste and an unknown quantity of other liquid wastes such as fuels, oils, solvents (Stoddard, xylene, toluene, and MEK), paints, and paint strippers were disposed in the landfill. The majority of the liquid wastes were burned during fire-fighting training. The disposal operations of the solid wastes consisted of transporting wastes to the site, igniting them with diesel fuel, then pushing the ash and remaining material into trenches and covering them with soil. The landfill was in operation from 1966 to the 1972. Ten feet of fill was reportedly placed over the site upon closure of the landfill. There is no indication of the landfill at the site.

Verification Study Three soil borings were completed and a monitoring well was installed in each of these borings. One surface water sample and one sediment sample were collected and analyzed for pH, conductance, TOC, TOX, COD, O&G, Cd, Cr, and Pb. Analytical results are presented in Table 2-11. The sediment sample showed elevated concentrations of chromium (19 mg/kg) and lead (39 mg/kg). One groundwater sample from each well was collected and analyzed for pH, conductance, Cd, Cr, Pb, VOC, and SVOC. Compounds detected in groundwater are presented in Table 2-10 and include Cr and Pb as follows:

GPT-4-1	Cr,	72 μg/l;	Pb,	50 μg/l
GPT-4-2	Cr,	22 μg/l;	Pb,	5.4 μg/l
GPT-4-3	Cr,	155 μg/l;	Pb,	124 μg/l.

A geophysical survey using a Scintrex-IGS™ was conducted at the site. A 50-foot by 50-foot grid was used for the survey of Site 4. Areas of magnetic anomalies and VLF values detected above background are shown on Figure 2-13.

4.6.2 Rationale for Technical Approach The objectives of the RI/FS program at Site 4 are to define the location and orientation of the landfill burial trenches; to determine the composition, magnitude, and extent of potential soil and sediment contamination; to determine the composition and magnitude of potential groundwater and surface water contamination; and to determine whether and imminent hazard to human health or the environment exists.

The concentrations of chromium and lead may be inherent to the groundwater in the region or may be the consequence of analyzing turbid samples. This will be evaluated by obtaining background samples, by analyzing filtered and unfiltered samples, and by analyzing TDS and TSS. The Verification Study indicates that except for the concentrations of chromium and lead there does not appear to be contamination of the shallow groundwater. However, two of the monitoring wells were installed upgradient of the landfill and only one was installed downgradient of the landfill. Well screens in the three monitoring wells range from 16 to 23

feet long and may cause dilution of groundwater samples. Therefore, additional monitoring wells are needed at the site to evaluate the status of contamination in the surficial aquifer at Site 4.

The following investigative objectives and methods are proposed to characterize Site 4.

Objective 1:	to determine the location and orientation of the landfill burial trenches.
Methods:	aerial photography analysis, and geophysical surveys (magnetometer, terrain conductivity, and ground-penetrating radar).
Objective 2:	to determine the composition, magnitude, and extent of potential soil and sediment contamination.
Methods:	soil borings and subsurface soil sampling, surface soil sampling, and sediment sampling.
Objective 3:	to determine the composition and magnitude of potential groundwater and surface water contamination.
Methods:	sampling of existing monitoring wells, monitoring well installation and sampling, and surface water sampling.

4.6.3 Proposed Investigation The following provides descriptions of proposed investigative methods and sampling and analysis plans for Site 4, Golf Course Landfill.

Aerial Photography Survey An aerial photography survey will be conducted, consisting of procuring, evaluating, analyzing, and interpreting available historical and recent aerial photographs to aid in the assessment of former landfill operations and the historical development of the site.

Geophysical Survey A geophysical survey consisting of magnetometer, GPR, and/or terrain conductivity transects will be completed. The magnetometer survey will be comprised of survey lines spaced 100 feet apart, with readings taken each 20 feet along a survey line. Figure 4-7 shows the area to be included in the magnetometer survey. Each survey line will extend beyond the anticipated limits of the site. Terrain conductivity and/or GPR surveys will be located to confirm magnetic anomalies suspected of indicating areas of buried metal such as drums. Geophysical results will be presented on scaled site maps. Cumulative evaluation and interpretation of data from the three geophysical methods will be used to interpret the extent, location, and orientation of the landfill.

Surface Soil Sampling Five surface soil samples will be collected from locations within the boundaries of the disposal area at Site 4. Surface soil samples will provide information concerning potential human and ecological exposure and possible off-site transport through soil erosion.

THIS PAGE LEFT INTENTIONALLY BLANK.

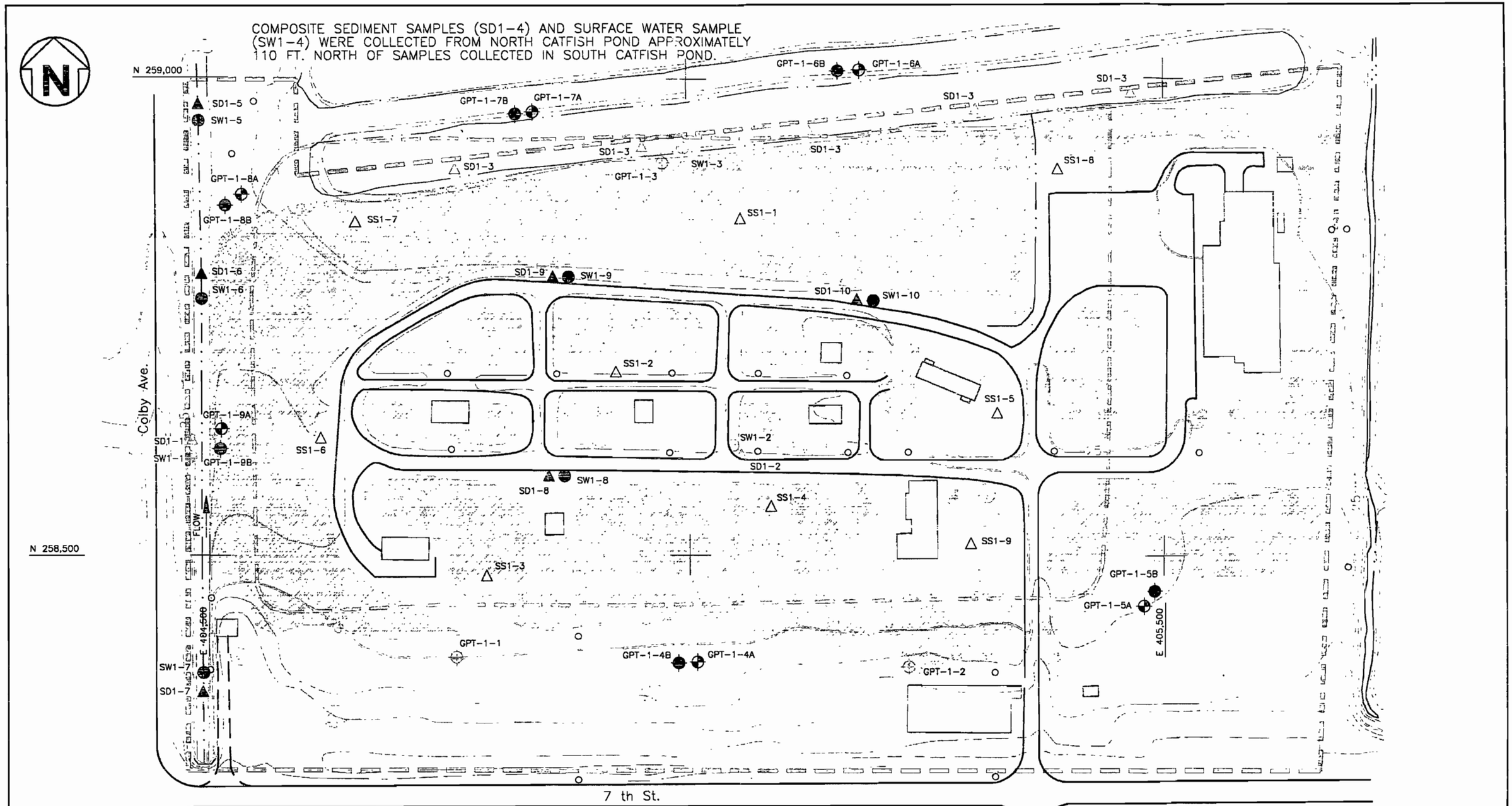

FIGURE 4-2
PROPOSED LOCATIONS OF REMEDIAL INVESTIGATION ACTIVITIES

SITE-1

RI/FS WORKPLAN

NAVAL CONSTRUCTION BATTALION CENTER
GULFPORT, MISSISSIPPI

Proposed surface soil sample locations are shown in Figure 4-7. Actual locations will be chosen in the field based on results of the geophysical survey. Some locations will be at or near areas interpreted as disposal trenches based on geophysical data. Other locations will be selected so that sampling generally covers all areas of the site, as necessary to support the Baseline Risk Assessment. Surface soil samples will be collected from the surface to 1-foot depth using a hand auger or similar device. Laboratory analyses will include TCL VOC, TCL SVOC, TCL pesticides and PCBs, TPH, and TAL inorganic compounds.

Subsurface Soil Sampling At Site 4, subsurface soil samples will be collected from soil borings conducted in association with monitoring well installation at the periphery of the site. Figure 4-7 shows proposed locations for soil borings and monitoring well installations. The purpose of this sampling is to determine whether subsurface soils at the periphery of the site have been impacted by past waste disposal. Because of the nature of the site (a landfill) borings will not be conducted within the limits of the site.

Split-spoon sampling will be conducted continuously (every 2 feet) to the water table then every 5 feet (or at facies boundaries) in intermediate-depth borings that are associated with monitoring well pairs. Headspace analysis using an OVA will be performed in the field on all samples from the intermediate borings. Four soil samples will be selected from each intermediate boring for laboratory analysis, including the sample from the interval above the water table and the top 2-foot interval of the clay layer. Two additional samples will be selected for laboratory analysis based on results of OVA headspace analysis. The rationale for selecting subsurface soil samples for laboratory analysis based on OVA headspace analysis is discussed in Section 3.4.2.2 of this document. Sixteen subsurface soil samples from four borings will be submitted for analysis of TCL VOC, TCL SVOC, TCL pesticides and PCBs, TPH, and TAL inorganic compounds. Sampling and analysis will conform with Level IV DQOs, except for those analyses not included in the CLP SOW which will be performed in accordance with Level III DQOs.

Split-spoon sampling will be conducted every 5 feet and/or at facies boundaries in shallow soil borings that are associated with monitoring well pairs. These samples will be used for soil classification and visual inspection only.

As many as nine subsurface soil samples from Site 4 will be submitted for analysis of total organic carbon for estimating soil-water partitioning coefficients. The nine samples will represent the three different facies expected at the site. These three facies are sand, silty sand, and clay. To evaluate spatial variation in organic carbon content, the samples will be collected from three boring locations. If all three facies are not represented at three boring locations, the number of samples submitted for organic carbon content determination will decrease accordingly. The data will be used to evaluate spatial and depth variations of organic carbon, as well as variation among facies.

Three samples of the clay layer will be collected from three intermediate borings using Shelby tubes. The Shelby tubes will be sealed on each end with wax, capped, labeled, and submitted to a geotechnical laboratory for constant-head flexible-wall permeability tests using the method found in COE *Engineering Manual 1110-2-1906* (USCOE, 1970). The laboratory permeability data will be used in

conjunction with slug-test data (discussed in Section 4.10.1) and total organic carbon data to evaluate fate and transport of potential contaminants at the site.

Installation of Monitoring Wells Proposed locations for groundwater monitoring wells were selected based on groundwater flow direction as determined by two sets of water-level measurements obtained from three existing monitoring wells at Site 4. Figures 4-3 and 4-4 are potentiometric surface maps developed from water-level measurements collected 30 March 1987 and 31 October 1991. Groundwater flow direction at Site 4 is to the northwest towards Canal No. 1.

Five monitoring well pairs are proposed at Site 4. Figure 4-7 shows the proposed locations of the monitoring well pairs. Each pair is comprised of a shallow well and an intermediate-depth well. Shallow wells will be constructed to intercept the water table in the screened interval. Shallow wells will be used to monitor groundwater for free-phase floating product and detection of shallow groundwater contaminants. Intermediate-depth wells will be constructed to monitor groundwater on top of the clay layer. Intermediate-depth monitoring wells will be used to monitor groundwater for free-phase product that is denser than water and to provide information regarding vertical distribution of potential contaminants in groundwater.

Three well pairs will be installed along the western periphery of the site to monitor groundwater downgradient of the site. One well pair will be installed to the southeast of the site to monitor upgradient groundwater for potential contaminants from off-site. The locations for the four well pairs were selected in consideration of the direction of groundwater flow and size of the site, and based on the potential for small plumes of contaminated groundwater caused by releases from one or more disposal trenches.

During the 1987 Verification Study conducted by HLA, soil borings were conducted for installation of three monitoring wells. Boring logs that were provided in the Verification Study report (HLA, 1987) indicate that depth of the clay layer ranges from 19 to 26 feet BLS at Site 4. Intermediate-depth wells that were installed in areas where the clay layer is relatively close to the surface of the water table may not require a corresponding shallow well to monitor for shallow or floating contaminants. Monitoring well installations at locations where the clay is relatively shallow may result in completion of only one well; or require the use of 5-foot well screens in the intermediate-depth well; or completing the intermediate well with a portion of the screen in the clay. These determinations will be made in the field on a case-by-case basis.

Groundwater levels at Site 4 range from less than 1 foot to 9.5 feet BLS. Depths of shallow wells to be installed at Site 4 during the RI/FS are expected to range from 10 to 18.5 feet BLS.

Actual depths of both shallow and intermediate wells will depend on site conditions at the boring locations. Actual locations of monitoring wells will depend on obtaining clearance for drilling activities and accessibility of the area to drilling equipment.

All wells will be constructed of flush-threaded, 2-inch-ID, Schedule 40 PVC riser pipe and well screen. Justification for the use of PVC well construction material is presented in Appendix B. A well screen slot size of 0.01 inch has been chosen based on the presence of silty sand and sand in the subsurface at Site 4. Well screens in associated well pairs should be positioned such that

there is no overlap of the screened intervals. Ten-foot-long well screens will be used; however, 5-foot screens may be used in intermediate-depth wells as necessary to avoid overlap of screened intervals in associated wells of a well pair. Wells will be constructed and installed in conformance with USEPA Region IV SOPs (USEPA, 1991c) (Appendix C) and SOUTHNAVFACENGCOM guidelines (Appendix D).

Groundwater samples will be collected from all new and existing monitoring wells. Groundwater samples will be collected and analyzed in conformance with Level IV DQOs, except those analyses not included in the CLP SOW will be performed in accordance with Level III DQOs. Groundwater samples will be analyzed for TCL VOC, TCL SVOC, TCL pesticides and PCBs, TPH, TAL inorganic compounds, TDS, and TSS. Both filtered and unfiltered groundwater samples will be submitted for TAL inorganic analyses. The TCL volatile organic analysis of groundwater samples will use a low-concentration method included in the CLP SOW that has detection limits lower than the usual CLP CRQLs. The lower detection limits are similar to ARARs associated with some volatile organic compounds.

If the sample results of the first round of groundwater sampling indicate the presence of site-related contaminants, a second round of groundwater samples will be collected for confirmation. The analyses performed on the second round of groundwater samples will be limited to include previously detected contaminants and will not necessarily include the entire TCL/TAL analyses. Level IV DQOs will be used for second-round groundwater sampling and analyses for CLP parameters and Level III DQOs will be used for analyses not included in the CLP SOW. If the analytical results of the first round of groundwater samples from Site 4 do not reveal detectable levels of any TCL chemical and all TAL inorganics are within background ranges, no further groundwater sampling will be conducted at Site 4.

Surface Water and Sediment Sampling Four surface water samples and four sediment samples (four "sets") will be collected from Canal No. 1 west of Site 4. Collection of surface water and sediment samples will be dependent upon the presence of sufficient material to sample. If sample material is not present at a proposed location, alternate sample locations will be chosen if sample material is present elsewhere in the area of interest.

The purpose of sediment and surface water sampling is to provide data for evaluation of possible ecological and human exposure pathways and to assess the potential for contaminant transport.

Four sets of samples will be collected from Canal No. 1 west of the site (Figure 4-7). One set will be collected from a location hydraulically upgradient of Site 4. Three sets of samples will be collected from locations adjacent to and downgradient of Site 4.

Surface water and sediment samples will be collected and analyzed in conformance with Level IV DQOs. Level III DQOs will be used for analyses not included in the CLP SOW. Laboratory analyses will include TCL VOC, TCL SVOC, TCL pesticides and PCBs, TPH, and TAL inorganic compounds. In addition, surface water samples will be analyzed for TAL inorganics, TDS, and TSS. Both filtered and unfiltered surface water samples will be submitted for TAL inorganic analyses. The TCL volatile organic analysis of surface water samples will use a low concentration method. A low level CLP analysis is preferred (1991 SOW) because surface water ARARs are commonly below the CRQL associated with the 1988 CLP SOW.

4.7 SITE 5, HEAVY EQUIPMENT TRAINING AREA LANDFILL.

4.7.1 Description and Background The Heavy Equipment Training Area is located approximately 450 feet west of the intersection of Fourth Street and Colby Avenue. The site consists of an inactive landfill that encompasses an area of approximately 5.5 acres. The site is bordered on the south and west by a drainage ditch. The Navy property line parallels the site approximately 250 feet west of the presumed landfill boundary.

An estimated 6,000 cubic yards of solid waste consisting of mainly trash, refuse from the reserve barracks, and tree cuttings were disposed in the landfill. An unknown quantity of other liquid wastes such as fuels, oils, solvents (Stoddard, xylene, toluene, and MEK), paints, and paint strippers were also disposed in the landfill. The majority of the liquid wastes were burned during fire-fighting training activities. Reportedly, 50 to 100 drums of liquid DDT and boxes of powder containing DDT were disposed in the southern part of the site. The disposal operations of the solid wastes consisted of transporting wastes to the site and disposing them directly in trenches. The landfill was in operation from 1972 to the 1976. The site is currently being used as a heavy equipment training area. The site was eventually covered with a 4- to 6-foot layer of fill dirt because wastes were continually uncovered during training activities. There is no vegetation on the site because of extensive use of heavy equipment at the site.

Verification Study Three soil borings were completed and a monitoring well was installed in each of these borings. One surface water sample and one sediment sample were collected and analyzed for pH, conductance, TOC, TOX, COD, O&G, Cd, Cr, and Pb. Analytical results are summarized in Table 2-12. The surface water sample, collected from the drainage ditch south of the site, had a concentration of cadmium (21 mg/kg) which may indicate a release from the site. One groundwater sample from each well was collected and analyzed for pH, conductance, Cd, Cr, Pb, volatile organic compounds, and semivolatile organic compounds. Compounds detected in groundwater are summarized in Table 2-12 and include Cr and Pb as follows:

GPT-5-1	Cr,	79 μg/l;	Pb,	39 μg/l
GPT-5-2	Cr,	104 μg/l;	Pb,	48 μg/l
GPT-5-3	Cr,	91 μg/l;	Pb,	35 μg/l.

A geophysical survey using a Scintrex-IGS™ was conducted at the site. A 50-foot by 50-foot grid was used for the survey of Site 5. Areas of magnetic anomalies and VLF values detected above background are shown on Figure 2-14.

4.7.2 Rationale for Technical Approach The objectives of the RI/FS program at Site 5 are to define the location and orientation of the landfill burial trenches; to determine the composition, magnitude, and extent of potential soil and sediment contamination; to determine the composition and magnitude of potential groundwater and surface water contamination; and to determine whether an imminent hazard to human health or the environment exists.

The concentrations of chromium and lead may be inherent to the groundwater in the region or may be the consequence of analyzing turbid samples. This will be evaluated by obtaining background samples, by analyzing filtered and unfiltered samples, and by analyzing TDS and TSS. Results of the Verification Study

indicate that, except for the concentrations of chromium and lead, there does not appear to be contamination of the shallow groundwater. However, two of the monitoring wells were installed upgradient of the landfill and only one was installed downgradient of the landfill. Well screens in the three monitoring wells range from 15.5 to 18 feet long and may cause dilution of groundwater samples. Therefore, additional monitoring wells are needed at the site to evaluate the status of groundwater contamination in the surficial aquifer at Site 5.

The following investigative objectives and methods are proposed to characterize Site 5.

Objective 1:	to determine the location and orientation of the landfill burial trenches.
Methods:	aerial photography analysis, and geophysical surveys (magnetometer, terrain conductivity, and ground penetrating radar).
Objective 2:	to determine the composition, magnitude, and extent of potential soil and sediment contamination.
Methods:	soil boring and subsurface soil sampling, surface soil sampling, and sediment sampling.
Objective 3:	to determine the composition and magnitude of potential groundwater and surface water contamination.
Methods:	sampling of existing monitoring wells, monitoring well installation and sampling, and surface water sampling.

4.7.3 Proposed Investigation The following provides descriptions of proposed investigative methods and sampling and analysis plans for Site 5, Heavy Equipment Training Area Landfill.

Aerial Photography Survey An aerial photography survey will be conducted, consisting of procuring, evaluating, analyzing, and interpreting available historical and recent aerial photographs to aid in the assessment of former landfill operations and the historical development of the site.

Geophysical Survey A geophysical survey consisting of magnetometer, GPR, and/or terrain conductivity transects will be completed. The magnetometer survey will be comprised of survey lines spaced 100 feet apart, with readings taken each 20 feet along a survey line. Figure 4-8 shows the area to be included in the magnetometer survey. Each survey line will extend beyond the anticipated limits of the site. Terrain conductivity and GPR surveys will be located to confirm magnetic anomalies suspected of indicating areas of buried metal, such as drums. Geophysical results will be presented on scaled site maps. Cumulative evaluation and interpretation of data from the three geophysical methods will be used to interpret the extent, location, and orientation of the landfill.

THIS PAGE LEFT INTENTIONALLY BLANK.

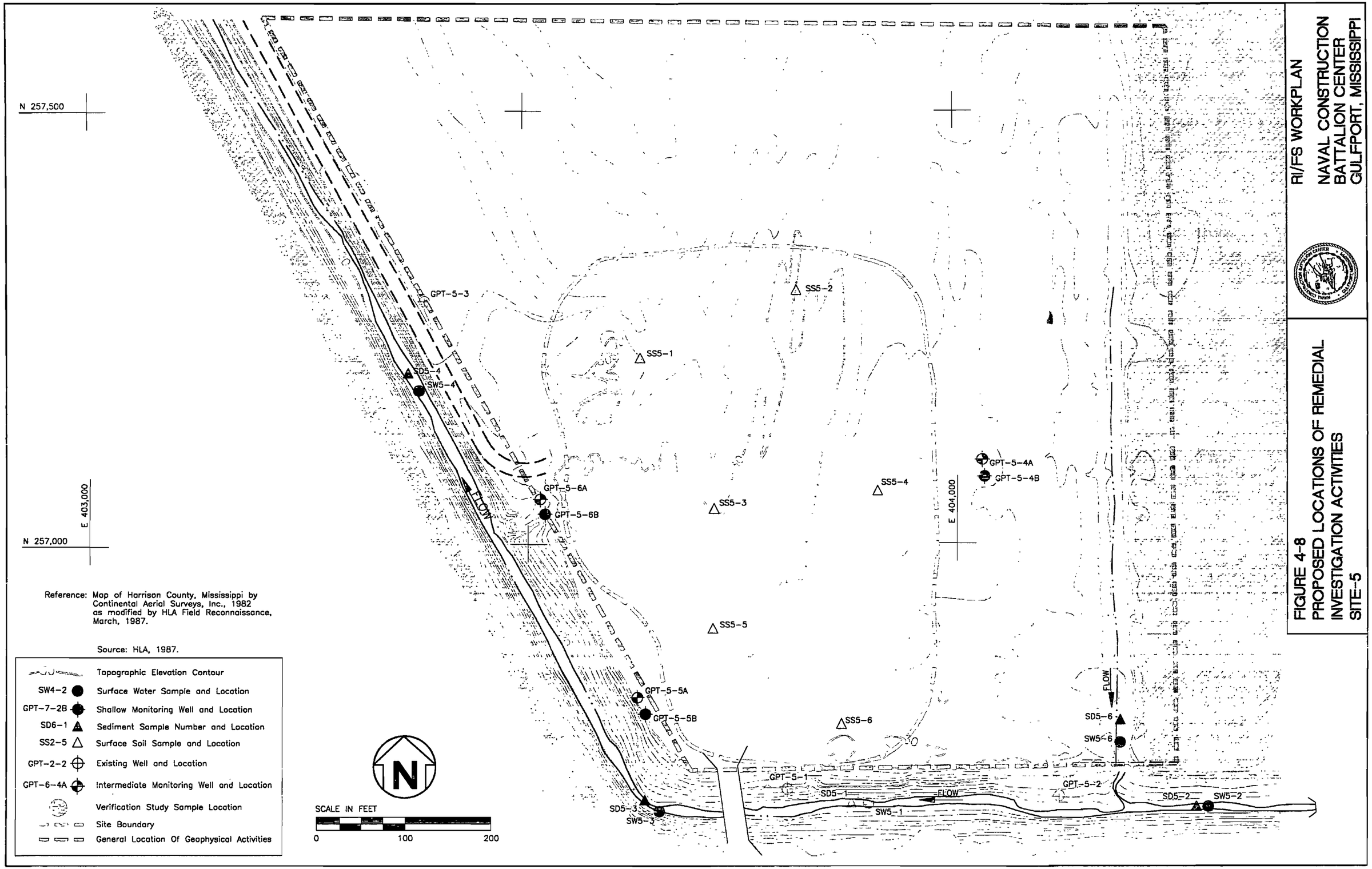
N 257,500
N 257,000
E 403,000
E 404,000
GPT-5-3
SD5-4
SW5-4
GPT-5-6A
GPT-5-6B
FLOW
SS5-1
SS5-2
SS5-3
SS5-4
SS5-5
SS5-6
GPT-5-4A
GPT-5-4B
GPT-5-5A
GPT-5-5B
SD5-3
SW5-3
GPT-5-1
SD5-1
SW5-1
FLOW
SD5-6
SW5-6
FLOW
GPT-5-2
SD5-2
SW5-2
N
SCALE IN FEET
0
100
200
Reference: Map of Harrison County, Mississippi by Continental Aerial Surveys, Inc., 1982 as modified by HLA Field Reconnaissance, March, 1987.
Source: HLA, 1987.
Topographic Elevation Contour
SW4-2 Surface Water Sample and Location
GPT-7-2B Shallow Monitoring Well and Location
SD6-1 Sediment Sample Number and Location
SS2-5 Surface Soil Sample and Location
GPT-2-2 Existing Well and Location
GPT-6-4A Intermediate Monitoring Well and Location
Verification Study Sample Location
Site Boundary
General Location Of Geophysical Activities
RI/FS WORKPLAN
NAVAL CONSTRUCTION BATTALION CENTER GULFPORT, MISSISSIPPI
FIGURE 4-8
PROPOSED LOCATIONS OF REMEDIAL INVESTIGATION ACTIVITIES SITE-5

Surface Soil Sampling Six surface soil samples will be collected from locations within the boundaries of the disposal area at Site 5. Surface soil samples will provide information concerning potential human and ecological exposure and possible off-site transport through soil erosion.

Proposed surface soil sample locations are shown in Figure 4-8. Actual locations will be chosen in the field based on results of the geophysical survey. Some locations will be at or near areas interpreted as disposal trenches based on geophysical data. Other locations will be selected so that sampling generally covers all areas of the site, as necessary, to support the Baseline Risk Assessment. Surface soil samples will be collected from the surface to 1-foot depth using a hand auger or similar device. Laboratory analyses will include TCL VOC, TCL SVOC, TCL pesticides and PCBs, TPH, and TAL inorganic compounds.

Subsurface Soil Sampling At Site 5 subsurface soil samples will be collected from soil borings conducted in association with monitoring well installation at the periphery of the site. Figure 4-8 shows proposed locations for soil borings and monitoring well installations. The purpose of this sampling is to determine whether subsurface soils at the periphery of the site have been impacted by past waste disposal. Because of the nature of the site (a landfill) borings will not be conducted within the limits of the site.

Split-spoon sampling will be conducted continuously (every 2 feet) to the water table then every 5 feet (or at facies boundaries) in intermediate-depth borings associated with monitoring well pairs. Headspace analysis using an OVA will be performed in the field on all samples from the intermediate borings. Four soil samples will be selected from each intermediate boring for laboratory analysis, including the sample from the interval above the water table and the top 2-foot interval of the clay layer. Two additional samples will be selected for laboratory analysis based on results of OVA headspace analysis. The rationale for selecting subsurface soil samples for laboratory analysis based on OVA headspace analysis is discussed in Section 3.4.2.2 of this document. Twelve subsurface soil samples from three borings will be submitted for analysis of TCL VOC, TCL SVOC, TCL pesticides and PCBs, TPH, and TAL inorganic compounds.

Split-spoon sampling will be conducted every 5 feet and/or at facies boundaries in shallow soil borings associated with monitoring well clusters. These samples will be used for soil classification and visual inspection only.

As many as 12 subsurface soil samples from Site 5 will be submitted for analysis of total organic carbon for purposes of estimating soil-water partitioning coefficients. The 12 samples will represent four different facies expected of to be at the site. These four facies are sand, silty sand, clayey sand, and clay. To evaluate spatial variation in organic carbon content, the samples will be collected from three boring locations. If all four facies are not represented at three locations, the number of samples submitted for organic carbon content determination will decrease accordingly. The data will be used to evaluate spatial and depth variations of organic carbon, as well as variation among facies.

Three samples of the clay layer will be collected from three intermediate borings using Shelby tubes. The Shelby tubes will be sealed on each end with wax, capped, labeled, and submitted to a geotechnical laboratory for constant-head flexible-wall permeability tests using the method found in the COE *Engineering*

Manual 1110-2-1906 (USCOE, 1970). The laboratory permeability data will be used in conjunction with slug-test data (discussed in Section 4.10.1) and TOC data to evaluate fate and transport of potential contaminants at the site.

Installation of Monitoring Wells Proposed locations for groundwater monitoring wells were selected based on groundwater flow direction determined by two sets of water-level measurements obtained from three existing monitoring wells at Site 5. Figures 4-3 and 4-4 are potentiometric surface maps developed from water-level measurements collected 30 March 1987 and 31 October 1991. Groundwater flow direction at Site 5 is to the west-southwest during periods of high water table (see Figure 4-3) and west during periods of low water table (see Figure 4-4) towards Canal No. 1, which borders the site on the western and southern sides.

Three monitoring well pairs are proposed at Site 5. Figure 4-8 shows the proposed locations of the monitoring well pairs. Each pair is comprised of a shallow well and an intermediate-depth well. Shallow wells will be constructed to intercept the water table in the screened interval. Shallow wells will be used to monitor groundwater for free-phase floating product and detection of shallow groundwater contaminants. Intermediate-depth wells will be constructed to monitor groundwater on top of the clay layer. Intermediate-depth monitoring wells will be used to monitor groundwater for free-phase product that is denser than water and to provide information regarding vertical distribution of potential contaminants in groundwater.

Two well pairs will be installed along the western periphery of the site to monitor groundwater downgradient of the site. One well pair will be installed to the east of the site to monitor upgradient groundwater for potential contaminants from off-site. The locations for the three well pairs were selected in consideration of the direction of groundwater flow and size of the site, and based on the potential for small plumes of contaminated groundwater resulting from releases from one or more disposal trenches.

During the 1987 Verification Study conducted by HLA, soil borings were conducted for installation of three monitoring wells. Boring logs that were provided in the Verification Study report (HLA, 1987) indicate that depth of the clay layer ranges from 19 to 26 feet BLS at Site 5. Intermediate-depth wells installed in areas where the clay layer is relatively close to the surface of the water table may not require a corresponding shallow well to monitor for shallow or floating contaminants. Monitoring well installations at locations where the clay is relatively shallow may result in completion of only one well, or require the use of 5-foot well screens in the intermediate-depth well, or require completing the intermediate well with a portion of the screen in the clay. These determinations will be made in the field on a case-by-case basis.

Groundwater levels at Site 5 range from 2.8 to 9.4 feet BLS. Depths of shallow wells installed at Site 5 during the RI/FS are expected to range from 12 to 18.5 feet BLS.

Actual depths of both shallow and intermediate wells will depend on site conditions at the boring locations. Actual locations of monitoring wells will depend on obtaining clearance for drilling activities and accessibility of the area to drilling equipment.

All wells will be constructed of flush-threaded, 2-inch-ID, Schedule 40 PVC riser pipe and well screen. Justification for the use of PVC well construction material is presented in Appendix B. A well screen slot size of 0.01 inch has been chosen based on the presence of silty sand, clayey sand, and sand in the subsurface at Site 5. Well screens in associated well pairs should be positioned such that there is no overlap of the screened intervals. Ten-foot-long well screens will be used; however, 5-foot screens may be used in the intermediate-depth wells as necessary to avoid overlap of screened intervals in associated wells of a well pair. Wells will be constructed and installed in conformance with USEPA Region IV SOPs (USEPA, 1991c) (Appendix C) and SOUTHNAVFACENGCOM guidelines (Appendix D).

Groundwater samples will be collected from all new and existing monitoring wells. Groundwater samples will be collected and analyzed in conformance with Level IV DQOs, except for those analyses not included in the CLP SOW, which will be analyzed in conformance with Level III DQOs. Groundwater samples will be analyzed for TCL VOC, TCL SVOC, TCL pesticides and PCBs, TPH, TAL inorganic compounds, TDS and TSS. Both filtered and unfiltered groundwater samples will be submitted for TAL inorganic analyses. TCL volatile organic analysis of groundwater samples will use a low-concentration method included in the CLP SOW that has detection limits lower than the usual CLP CRQLs. The lower detection limits are similar to ARARs associated with some volatile organic compounds.

If the sample results of the first round of groundwater sampling indicate the presence of site-related contaminants, a second-round of groundwater samples will be collected for confirmation. The analyses performed on the second round of groundwater samples will be limited to include previously detected contaminants and will not necessarily include the entire TCL/TAL analyses. Level IV DQOs will be used for second-round groundwater sampling and analyses for CLP parameters and Level III DQOs will be used to analyze parameters not included in the CLP SOW. If the analytical results of the first round of groundwater samples from Site 5 do not reveal detectable levels of any TCL chemical and all TAL inorganics are within background ranges, no further groundwater sampling will be conducted at Site 5.

Surface Water and Sediment Sampling Four surface water samples and four sediment samples (four "sets") will be collected from the drainage ditch west of Site 5 and the drainage ditch east of Site 5. Collection of surface water and sediment samples will be dependent upon the presence of sufficient material to sample. If sample material is not present at a proposed location, alternate sample locations will be chosen if sample material is present elsewhere in the area of interest.

The purpose of sediment and surface water sampling is to provide data for evaluation of possible ecological and human exposure pathways and to assess the potential for contaminant transport.

Three sets of samples will be collected from the drainage ditch west of the site (see Figure 4-8). One set will be collected from a location hydraulically upgradient of Site 5. Three sets of samples will be collected from locations adjacent to Site 5. One set of samples will be collected from the drainage ditch east of Site 5.

Surface water and sediment samples will be collected and analyzed in conformance with Level IV DQOs, except for those analyses not included in the CLP SOW, which

will be analyzed using Level III DQOs. Laboratory analyses will include TCL VOC, TCL SVOC, TCL pesticides and PCBs, TPH, and TAL inorganic compounds. In addition, surface water samples will be analyzed for TAL inorganics, TDS and TSS. Both filtered and unfiltered surface water samples will be submitted for TAL inorganic analyses. The TCL volatile organic analysis of surface water samples will use a low-concentration method. A low level CLP analysis is preferred (1991 SOW) because surface water ARARs are commonly below the CRQL associated with the 1988 CLP SOW.

4.8 SITE 6, FIRE-FIGHTING TRAINING AREA.

4.8.1 Description and Background The former Fire-fighting Training Area consisted of two unlined pits located southeast of the Fifth Street and Colby Avenue intersection. One pit was approximately 50 feet long, 35 feet wide and 4 to 5 feet deep. The other pit was approximately 40 feet long, 25 feet wide, and 6 feet deep. The larger site is now partially covered by Building No. 383 and the smaller site is located just east of Building No. 390.

The two pits were used for fire-fighting training activities from 1966 to 1975. Waste liquids from the CED, NCTC, 20th NCR, and public works shops, as well as flammable liquids from Keesler Air Force Base, the Air National Guard Base, and Pascagoula Shipyard were dumped into the pits and ignited. Approximately 500,000 gallons of liquids such as waste fuels, oils, solvents (Stoddard, xylene, toluene, and MEK), paints, paint thinners, and cleaning compounds were burned at the site. Upon closure of the site, the pits were filled in with soil and are no longer distinguishable. The site is currently used to train personnel how to construct and dismantle power lines and transformers on electric utility poles.

Verification Study Three soil borings were completed and a monitoring well was installed in each of these borings. One sediment sample and two soil samples were collected and analyzed for pH, conductance, TOC, TOX, COD, O&G, Cd, Cr, and Pb. Analytical results are summarized in Table 2-13. Concentration of lead detected in the sediment sample was 4.1 mg/kg and chromium was below detection. Chromium was detected in both soil samples at levels of 5.4 and 7.7 mg/kg. Lead was detected in one soil sample at a concentration of 6.9 mg/kg. One groundwater sample from each well was collected and analyzed for pH, conductance, Cd, Cr, Pb, VOC, and SVOC. Compounds detected in groundwater are summarized in Table 2-13 and include Cr and Pb as follows:

GPT-6-1	Cr,	72 μg/l;	Pb,	70 μg/l
GPT-6-2	Cr,	38 μg/l;	Pb,	21 μg/l
GPT-6-3	Cr,	30 μg/l;	Pb,	26 μg/l.

A geophysical survey using a Scintrex-IGS™ was conducted at the site. A 50-foot by 50-foot grid was used for the survey of Site 6. Areas of magnetic anomalies and VLF values that were detected above background levels are shown on Figure 2-15.

On 31 October 1991 ABB-ES personnel conducted a site visit to NCBC Gulfport. During the site visit water-level measurements were made in three existing monitoring wells at Site 6. Monitoring well GPT-6-1 contained a significant amount of free-phase floating product. Upon retrieval from the well, the probe and line of the water-level indicator were coated with a brown, oily, viscous liquid having an odor and appearance of diesel fuel. Additionally, the water

table is depressed 2 to 3 feet in the area of well GPT-6-1 (see Figure 4-4). The source of the product is unknown. There was no report of confirmed or suspected free product in the 1987 Verification Study report. The presence, extent, and source of free product at Site 6 will be evaluated during the RI/FS.

4.8.2 Rationale for Technical Approach The objectives of the RI/FS program at Site 6 are to assess the location and orientation of the two unlined pits; to evaluate the composition, magnitude, and extent of potential soil contamination; to evaluate the composition and magnitude of potential groundwater and surface water contamination; to assess the presence, extent, and source of free-phase floating product on the water table; and to assess whether an imminent hazard to human health or the environment exists.

The concentrations of chromium and lead may be inherent to the groundwater in the region or may be the consequence of analyzing turbid samples. This will be evaluated by obtaining background groundwater samples, by analyzing filtered and unfiltered samples and by analyzing TDS and TSS. Results of the Verification Study indicate that except for the concentrations of chromium and lead, there appears to be no contamination of the shallow groundwater. However, two of the monitoring wells were installed upgradient of the burn pits and only one was installed downgradient of the burn pits. Well screens in the monitoring wells range from 19 to 24.5 feet long and may cause dilution of groundwater samples. Therefore, additional monitoring wells are needed at the site to evaluate the status of potential groundwater contamination at Site 6.

The following investigative objectives and methods are proposed to characterize Site 6.

Objective 1:	to determine the location and orientation of the two unlined pits.
Methods:	aerial photography analysis, and geophysical surveys (terrain conductivity and ground-penetrating radar).
Objective 2:	to determine the composition, magnitude, and extent of potential soil and sediment contamination.
Methods:	soil boring and subsurface soil sampling, surface soil sampling, TerraProbe sampling, and sediment sampling.
Objective 3:	to determine the composition and magnitude of potential groundwater and surface water contamination.
Methods:	sampling of existing monitoring wells, monitoring well installation and sampling, and surface water sampling.

4.8.3 Proposed Investigation The following provides descriptions of proposed investigative methods and sampling and analysis plans for Site 6, Fire-Fighting Training Area.

Aerial Photography Survey An aerial photography survey will be conducted, consisting of procuring, evaluating, analyzing, and interpreting available historical and recent aerial photographs to aid in the assessment of former training operations and the historical development of the site.

Geophysical Survey A geophysical survey consisting of terrain conductivity and GPR will be completed. The terrain conductivity survey will be comprised of readings collected on a 25-foot grid pattern. The area to be included in the conductivity survey is shown in Figure 4-9. The purpose of the conductivity survey is to assist in delineation of the pits and/or groundwater containing relatively high levels of organic compounds or free product. A GPR survey will be used to confirm terrain conductivity anomalies that are suspected of being the location of the former pits. Geophysical results will be presented on scaled site maps. Cumulative evaluation and interpretation of data from the two geophysical methods will be used to interpret the location and orientation of the former pits.

TerraProbe Sampling Twenty-eight shallow subsurface soil samples will be collected using a TerraProbe. The samples will be screened for fuel-related VOC (benzene, toluene, ethylbenzene, and xylenes), methylene chloride, and TPH in an on-site mobile laboratory using Level II DQOs. The Level II screening data will be used to select locations for six soil borings (discussed separately below).

The TerraProbe soil samples will be collected from an interval above the water table. The samples will be visually inspected for the presence of free product. If free product is apparent (i.e., soils are saturated with an oily material) field analyses will not be conducted because high levels of organic compounds in samples will contaminate the instruments and delay work progress and/or interfere with analysis of other samples. The presence and location of saturated samples will be recorded in the field log book.

Figure 4-9 shows proposed locations for 28 TerraProbe sample points. The proposed sample points are spaced 60 feet apart along offset grid lines. Grid lines are 60 feet apart. Results of field analyses (and observations) may warrant relocating certain points or shifting the grid to concentrate on areas of concern (positive results) and limit sampling in areas consistently lacking detection of analytes.

Surface Soil Sampling Five surface soil samples will be collected from Site 6. Surface soil samples will provide information concerning potential human and ecological exposure and possible off-site transport through soil erosion.

Proposed surface soil sample locations are shown in Figure 4-10. Actual locations will be chosen in the field based on results of the geophysical survey and field analysis of samples collected with the TerraProbe. Two surface soil sample locations will be in the areas interpreted as being within the limits of the former pits. These samples will be collected from the 0 to 1-foot depth using a hand auger or similar device. The three remaining samples will be collected from the uppermost interval of on-site soil borings (discussed below) and will be collected using either a split-spoon or hand auger (or similar device). Sample collection and analysis will conform to Level IV DQOs for CLP parameters and Level III DQOs for parameters not included in the CLP SOW. Laboratory analyses will include TCL VOC, TCL SVOC, TCL pesticides and PCBs, TPH, TAL inorganic compounds, and polychlorinated dibenzodiozins.

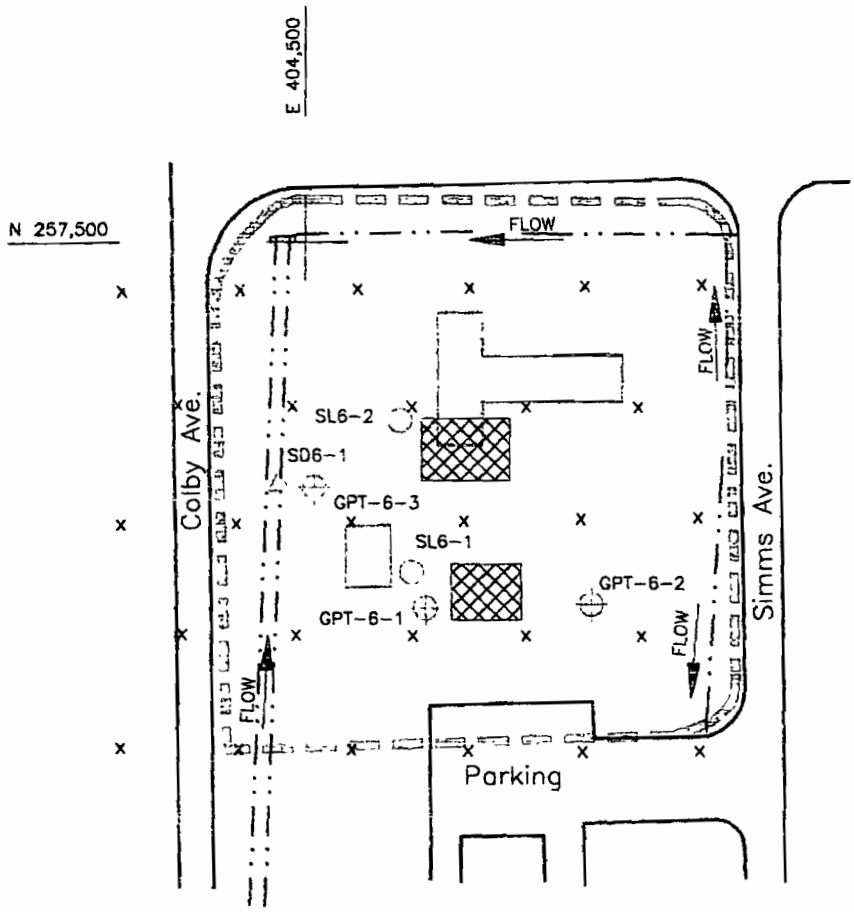

Source: HLA, 1987.

SL6-1	Soil Sample Number and Location
SD6-1	Sediment Sample Number and Location
GPT-2-2	Existing Well and Location
x	Terraprobe Soil Sample Location
	Former Burn Pit
	General Location Of geophysical Activities

N

Reference: Map of Harrison County, Mississippi by Continental Aerial Surveys, Inc., 1982 as modified by HLA Field Reconnaissance, March, 1987.

SCALE IN FEET

0 100 200

FIGURE 4-9
PROPOSED TERRAPROBE SAMPLE LOCATIONS AND AREA OF GEOPHYSICAL SURVEY - SITE-6

RI/FS WORKPLAN

NAVAL CONSTRUCTION BATTALION CENTER
GULFPORT, MISSISSIPPI

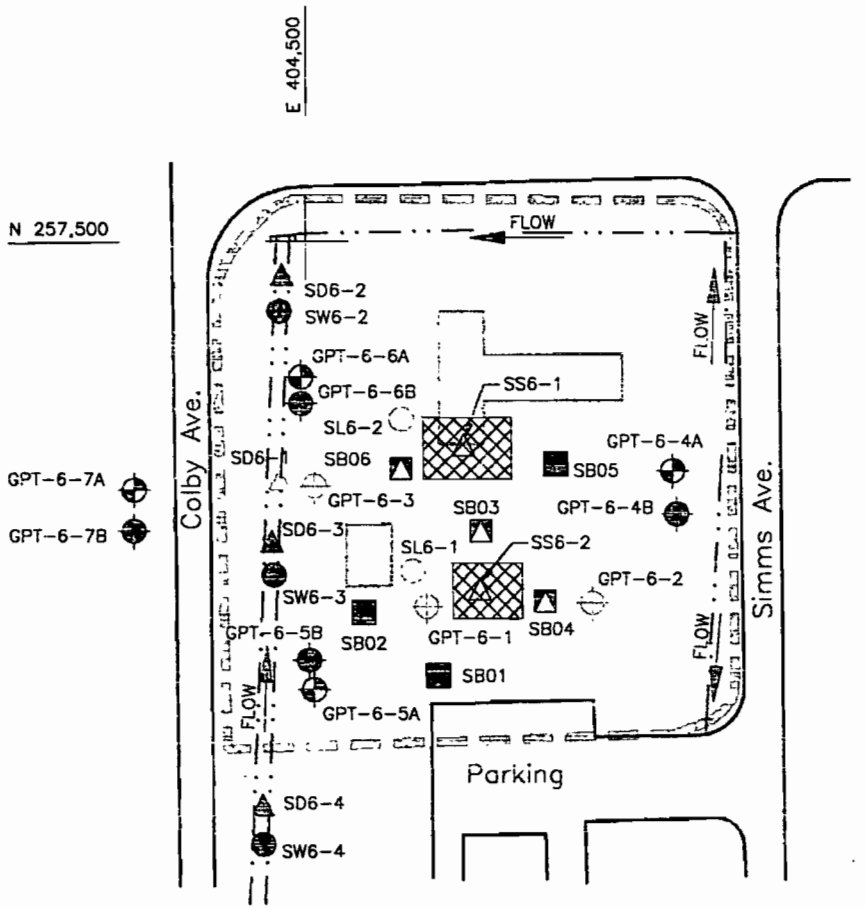

Source: HLA, 1987.

SL6-1	Soil Sample Number and Location
SW4-2	Surface Water Sample and Location
GPT-7-2B	Shallow Monitoring Well and Location
SD6-1	Sediment Sample Number and Location
SS2-5	Surface Soil Sample and Location
SB06	Soil Boring/ Surface Soil
SB01	Soil Boring
GPT-2-2	Existing Well and Location
GPT-6-4A	Intermediate Monitoring Well and Location
	Former Burn Pit
	Verification Study Sample Location
	General Location Of Geophysical Activities

Reference: Map of Harrison County, Mississippi by Continental Aerial Surveys, Inc., 1982 as modified by HLA Field Reconnaissance, March, 1987.

SCALE IN FEET

0 100 200

FIGURE 4-10
PROPOSED LOCATIONS OF REMEDIAL INVESTIGATION ACTIVITIES
SITE-6

RI/FS WORKPLAN

NAVAL CONSTRUCTION BATTALION CENTER
GULFPORT, MISSISSIPPI

Subsurface Soil Sampling Six on-site soil borings will be conducted for purposes of obtaining subsurface soil samples. Subsurface soil samples will also be collected from four soil borings conducted in association with monitoring well installation at the periphery of the site. Subsurface soil samples will provide information regarding the status of contamination in on-site subsurface soils. Proposed soil boring locations are shown in Figure 4-10. Actual locations will be selected based on results of the geophysical survey and field analyses conducted on samples collected with the TerraProbe. At each boring location split-spoon sampling will be conducted continuously (every 2 feet) to the water table, then every 5 feet or at facies boundaries. Split-spoon sampling will extend 2 feet into the clay layer. All split-spoon samples will be evaluated for volatile organic contamination by headspace analysis using an OVA. Four soil samples will be selected from each boring for laboratory analysis, always including the interval above the water table and top 2-foot interval of the clay layer. Additionally, three surface soil samples from three of six on-site borings will be submitted for laboratory analysis. One or two (as appropriate) additional subsurface soil samples will selected for laboratory analysis based on results of headspace analysis. The rationale for selecting subsurface soil samples for laboratory analysis based on OVA headspace analysis is discussed in Section 3.4.2.2 of this document. Completed on-site borings will be plugged with a cement/bentonite grout placed by tremie method.

Forty soil samples from 10 borings will be submitted for laboratory analysis. This total includes samples collected from six on-site borings and four monitoring well borings. Collection and analysis of soil samples from the borings will be in conformance with Level IV DQOs, except for those analyses not included in the CLP SOW, which will be analyzed using Level III DQOs. Laboratory analyses will include TCL VOC, TCL SVOC, TCL pesticides and PCBs, TPH, and TAL inorganic compounds. Surface soil samples that are collected from soil borings will also be analyzed for polychlorinated dibenzodioxins.

As many as 12 subsurface soil samples will be selected from one of the six on-site borings and two of the four intermediate-depth monitoring well borings for analysis of total organic carbon for purposes of estimating soil-water partitioning coefficients. The 12 samples will represent four facies expected of being present at the site. The four facies are sand, silty sand, clayey sand, and clay. If all four facies are not represented at the three boring locations the number of samples collected for analysis of organic carbon content will decrease accordingly.

Three samples of the clay layer will be collected from three borings (one on-site boring and two intermediate monitoring well borings) using Shelby tubes. The Shelby tubes will be sealed on each end with wax, capped, labeled, and submitted to a geotechnical laboratory for constant-head flexible wall permeability tests using the method found in the COE *Engineering Manual 1110-2-1906* (USCOE, 1970). The laboratory permeability data will be used in conjunction with slug-test data (discussed in Section 4.10.1) and total organic carbon data to evaluate fate and transport of potential contaminants at the site.

Installation of Monitoring Wells Proposed locations for groundwater monitoring wells were selected based on groundwater flow direction determined by two sets of water-level measurements that were obtained from three existing monitoring wells at Site 6. Figures 4-3 and 4-4 are potentiometric surface maps developed

from water-level measurements collected 30 March 1987 and 31 October 1991. Groundwater flow at Site 6 is to the west-southwest.

Four monitoring well pairs are proposed at Site 6. Figure 4-10 shows the proposed locations of the monitoring well pairs. Each pair is comprised of a shallow well and an intermediate-depth well. Shallow wells will be constructed to intercept the water table in the screened interval. Shallow wells would be used to monitor groundwater for free-phase floating product and detection of shallow groundwater contaminants. Intermediate-depth wells will be constructed to monitor groundwater for free-phase product that is denser than water and to provide information regarding vertical distribution of potential contaminants in groundwater.

Three well pairs will be installed along the western periphery of the site to monitor groundwater downgradient of the site. One well pair will be installed to the east of the site to monitor groundwater for potential contaminants from off-site sources. The locations for the four well pairs were selected in consideration of the free product observed in well GPT 6-1 during the 31 October 1991 site visit and the groundwater flow direction in the area of the Site 6.

During the 1987 Verification Study conducted by HLA, soil borings were conducted for installation of three monitoring wells. Boring logs that were provided in in the Verification Study report (HLA, 1987) indicate that depth of the clay layer ranges from 22 to 27.5 feet BLS at Site 6. Intermediate-depth wells that are installed in areas where the clay layer is relatively close to the surface of the water table may not require a corresponding shallow well to monitor for shallow or floating contaminants. Monitoring-well installations at locations where the clay is relatively shallow may result in completion of only one well; or require the use of the 5-foot well screens in the intermediate-depth well; or completing the intermediate well with a portion of the screen in the clay. These determinations will be made in the field on a case-by-case basis.

Groundwater levels at Site 6 range from 1.5 to 7.4 feet (10.2 feet in GPT-6-1, due to product on water table) BLS. Depths of shallow wells installed at Site 6 during the RI/FS are expected to range from 10.5 to 16.5 feet BLS.

Actual depths of both shallow and intermediate wells will depend on site conditions at the boring locations. Actual locations of monitoring wells will depend on obtaining clearance for drilling activities and accessibility of the area to drilling equipment.

All wells will be constructed of flush-threaded, 2-inch-ID, Schedule 40 PVC riser pipe and well screen. Justification for the use of PVC well construction material is presented in Appendix B. A well screen slot size of 0.01 inch has been chosen based on the presence of clayey sand, silty sand, and sand in the subsurface at Site 6. Well screens in associated well pairs should be positioned such that there is no overlap of the screened intervals. Ten-foot-long well screens will be used; however, 5-foot screens may be used in intermediate-depth wells as necessary to avoid overlap of screened intervals in associated wells of a well pair. Wells will be constructed and installed in conformance with USEPA Region IV SOPs (USEPA, 1991c) (Appendix C) and SOUTHNAVFACENGCOM guidelines (Appendix D).

Groundwater samples will be collected from all new and existing monitoring wells. Groundwater samples will not be collected from wells containing free product, if

any. Groundwater samples will be collected and analyzed in conformance with Level IV DQOs for CLP parameters and Level III DQOs for parameters not included in the CLP SOW. Groundwater samples will be analyzed for TCL VOC, TCL SVOC, TCL pesticides and PCBs, TPH, TAL inorganic compounds, TDS, and TSS. Both filtered and unfiltered samples will be submitted for TAL inorganic analyses. The TCL volatile organic analysis of groundwater samples will use a low-concentration method included in the CLP SOW that has detection limits lower than the usual CLP CRQLs. The lower detection limits are similar to ARARs associated with some volatile organic compounds.

If the sample results of the first round of groundwater sampling indicate the presence of site related contaminants, a second round of groundwater samples will be collected for confirmation. The analyses performed on the second round of groundwater samples will be limited to include previously detected contaminants and will not necessarily include the entire TCL/TAL analyses. Second-round sampling and analyses will conform with Level IV DQOs for CLP analyses and Level III DQOs for analyses that are not included in the CLP SOW. If the analytical results of the first round of groundwater samples from Site 6 do not reveal detectable levels of any TCL chemical and all TAL inorganics are within background ranges, no further groundwater sampling will be conducted at Site 6.

Surface Water and Sediment Sampling Three surface water samples and three sediment samples (three "sets") will be collected from the drainage ditch west of Site 6. Collection of surface water and sediment samples will be dependent upon the presence of sufficient material to sample. If sample material is not present at a proposed location, alternate sample locations will be chosen if sample material is present elsewhere in the area of interest.

The purpose of sediment and surface water sampling is to provide data for evaluation of possible ecological and human exposure pathways and to assess the potential for contaminant transport.

Three sets of samples will be collected from the drainage ditch west of the site and east of Colby Avenue (Figure 4-10). One set will be collected from a location hydraulically upgradient of Site 6. Two sets of samples will be collected from locations adjacent to and downgradient of Site 6.

Surface water and sediment samples will be collected and analyzed in conformance with Level IV DQOs, except for those analyses not included in the CLP SOW, which will be analyzed according to the Level III DQOs. Laboratory analyses will include TCL VOC, TCL SVOC, TCL pesticides and PCBs, TPH, and TAL inorganic compounds. In addition, surface water samples will be analyzed for TAL inorganics, TDS and TSS. Both filtered and unfiltered surface water samples will be submitted for TAL inorganic analyses. The TCL volatile organic analysis of surface water samples will use a low-concentration method. A low level CLP analysis is preferred (1991 SOW) because surface water ARARs are commonly below the CRQL associated with the 1988 CLP SOW.

4.9 SITE 7, RUBBLE DISPOSAL AREA.

4.9.1 Description and Background Site 7 is located northeast of Site 2; is bordered on the north by Eleventh Street; and is located approximately 200 feet east of Building 225 in an operational storage area. Site 7 consists of an inactive disposal area measuring approximately 375 by 350 feet.

Site 7 was used for the disposal of construction and demolition debris such as concrete, lumber, scrap metal, and similar inert materials. The site was reportedly used from 1978 to 1984. There is no report of hazardous waste disposal at this site. The area is now an open grassed area.

Verification Study Sites 2 and 7 were investigated as one site for the purposes of groundwater monitoring and surface water and sediment sampling during the Verification Study. Three soil borings were completed and a monitoring well was installed in each of these borings to monitor Sites 2 and 7, combined. One monitoring well (GPT-2-3) is located along the northern boundary of Site 7. The other two wells (GPT-2-1 and GPT-2-2) are located along the southern boundary of Site 2. One groundwater sample from each well was collected and analyzed for pH, conductance, Cd, Cr, Pb, VOC, and SVOC. Compounds detected in groundwater by these analyses include Cr and Pb as follows:

GPT-2-1 Cr, 26 μg/l; Pb, 20 μg/l
GPT-2-2 Cr, 73 μg/l; Pb, 41 μg/l
GPT-2-3 Cr, 21 μg/l; Pb, 13 μg/l.

Additionally, concentrations of 1,2-trans-dichloroethene (37 μg/l), trichloroethylene (5 μg/l), and bis(2-ethylhexyl)phthalate (21 μg/l) were detected in samples from GPT-2-3. This well is nearest Site 7.

A geophysical survey using a Scintrex-IGS™ was conducted at Site 7. A 100-foot by 100-foot survey was used for the survey of Site 7. Areas of magnetic anomalies and VLF values detected above background are shown on Figure 2-11.

4.9.2 Rationale for Technical Approach The objectives of the RI/FS program at Site 7 are to assess the location and orientation of the landfill; to evaluate the composition, magnitude, and extent of potential soil contamination; to evaluate the composition and magnitude of potential groundwater and surface water contamination; and to assess whether an imminent hazard to human health or the environment exists.

The concentrations of chromium and lead may be inherent to the groundwater in the region or may be the consequence of analyzing turbid samples. This will be evaluated by obtaining background samples, by analyzing filtered and unfiltered samples, and by analyzing TDS and TSS. Potential contamination of the surficial aquifer based on the concentrations of 1,2-trans-dichloroethene and bis(2-ethylhexyl)phthalate in samples from GPT-2-3 cannot be determined based on results of the Verification Study alone. The concentrations of organic compounds were only detected in one of the wells (GPT-2-3), the only monitoring well installed at Site 7. The well screen in the monitoring well is 19 feet long and may cause dilution of groundwater samples. Therefore, there currently is not a sufficient number of monitoring wells at the site to determine groundwater flow direction or to confirm whether contamination of the surficial aquifer exists.

During this remedial investigation program, Sites 2 and 7 will be investigated as two separate entities. The following investigative objectives and methods are proposed to characterize Site 7.

Objective 1: to determine the location and orientation of the landfill.

Methods:	aerial photography analysis, and geophysical surveys (magnetometer, terrain conductivity and ground-penetrating radar).
Objective 2:	to determine the composition, magnitude, and extent of potential soil and sediment contamination.
Methods:	soil boring and subsurface soil sampling, surface soil sampling, and sediment sampling.
Objective 3:	to determine the composition and magnitude of potential groundwater and surface water contamination.
Methods:	sampling of the existing monitoring well, monitoring well installation and sampling, and surface water sampling.

4.9.3 Proposed Investigation The following provides descriptions of proposed investigative methods and sampling and analysis plans for Site 7, Rubble Disposal Area.

Aerial Photography Survey An aerial photography survey will be conducted, consisting of procuring, evaluating, analyzing, and interpreting available historical and recent aerial photographs to aid in the assessment of former landfill operations and the historical development of the site.

Geophysical Survey A geophysical survey consisting of magnetometer, GPR, and/or terrain conductivity transects will be completed. The magnetometer survey will be comprised of survey lines spaced 100 feet apart, with readings taken each 20 feet along a survey line. Figure 4-5 shows the area to be included in the magnetometer survey. Each survey line will extend beyond the anticipated limits of the site. Terrain conductivity and GPR surveys will be located to confirm magnetic anomalies suspected of indicating areas of buried metal. Geophysical results will be presented on scaled site maps. Cumulative evaluation and interpretation of data from the three geophysical methods will be used to interpret the extent, locations, and orientation of the landfill.

Surface Soil Sampling Four surface soil samples will be collected from locations within the boundaries of the disposal area at Site 7. Surface soil samples will provide information concerning potential human and ecological exposure and possible off-site transport of contaminants through soil erosion.

Proposed surface soil sample locations are shown in Figure 4-5. Actual locations will be chosen in the field based on results of the geophysical survey. Locations will be selected so that sampling generally covers all areas of the site, as necessary to support the Baseline Risk Assessment. Surface soil samples will be collected from the surface to 1-foot depth using a hand auger or similar device. Laboratory analyses will include TCL VOC, TCL SVOC, TCL pesticides and PCBs, TPH, and TAL inorganic compounds.

Subsurface Soil Sampling At Site 7, subsurface soil samples will be collected from soil borings conducted in association with monitoring well installation at the periphery of the site. Figure 4-5 shows proposed locations for soil borings

and monitoring well installations. The purpose of this sampling is to determine whether subsurface soils at the periphery of the site have been impacted by past waste disposal. Because of the nature of the site (a landfill) borings will not be conducted within the limits of the site.

Split-spoon sampling will be conducted continuously (every 2 feet) to the water table than every 5 feet (or at facies boundaries) in intermediate-depth borings associated with monitoring well pairs. Headspace analysis using an OVA will be performed in the field on all samples from the intermediate borings. Four soil samples will be selected from each intermediate boring for laboratory analysis, including the sample from the interval above the water table and the top 2-foot interval of the clay layer. Two additional samples will be selected for laboratory analysis based on results of OVA headspace analysis. The rationale for selecting subsurface soil samples for laboratory analysis based on OVA headspace analysis is discussed in Section 3.4.2.2 of this document. Sixteen subsurface soil samples from four borings will be submitted for analysis of TCL VOC, TCL SVOC, TCL pesticides and PCBs, TPH, and TAL inorganic compounds. Sampling and analysis will conform with Level IV DQOs for CLP analyses. Level III DQOs will be used for analyses not included in the CLP SOW.

Split-spoon sampling will be conducted every 5 feet and/or at facies boundaries in shallow soil borings associated with monitoring well clusters. These samples will be used for soil classification and visual inspection, only.

As many as nine subsurface soil samples from Site 7 will be submitted for analysis of TOC for purposes of estimating soil-water partitioning coefficients. The nine samples will represent three different facies expected of being present at the site. These three facies are sand, silty sand, and clay. To evaluate spatial variation in organic carbon content, the samples will be collected from three boring locations. If all three facies are not represented at three locations, the number of samples submitted for organic carbon content determination will decrease accordingly. The data will be used to evaluate spatial and depth variations of organic carbon, as well as variation among facies.

Three samples of the clay layer will be collected from three intermediate borings using Shelby tubes. The Shelby tubes will be sealed on each end with wax, capped, labeled, and submitted to a geotechnical laboratory for constant-head flexible-wall permeability tests using the method found in COE *Engineering Manual 1110-2-1906* (USCOE, 1970). The laboratory permeability data will be used in conjunction with slug-test data (discussed in Section 4.10.1) and TOC data to evaluate fate and transport of potential contaminants at the site.

Monitoring Well Installation Proposed locations for groundwater monitoring wells were selected based on the need to evaluate groundwater flow direction at Site 7 and monitor groundwater quality in the surficial aquifer. Figures 4-3 and 4-4 are potentiometric surface maps developed from water-level measurements collected 30 March 1987 and 31 October 1991. Groundwater flow direction at Site 7 is not well defined.

Four monitoring well pairs are proposed at Site 7. Figure 4-5 shows the proposed locations of the monitoring well pairs. Each pair is comprised of a shallow well and an intermediate-depth well. Shallow wells will be constructed to intercept the water table in the screened interval. Shallow wells would be used to monitor

groundwater for free-phase floating product and detection of shallow groundwater contaminants. Intermediate-depth wells will be constructed to monitor groundwater on top of the clay layer. Intermediate-depth monitoring wells will be used to monitor groundwater for free-phase product that is denser than water and to provide information regarding vertical distribution of potential contaminants in groundwater.

One well pair will be installed along each of the four sides of the site. The locations for the four well pairs were selected in consideration of the proximity of Site 7 to Site 2, the potential for contaminated groundwater from Site 2 to migrate towards Site 7, and the presence of chlorinated solvents in groundwater from existing well GPT-2-3 which was sampled during the Verification Study (March 1987).

During the 1987 Verification Study conducted by HLA, soil borings were conducted for installation of three monitoring wells at Site 2 and Site 7. Boring logs that were provided in the Verification Study report (HLA, 1987) indicate that depth of the clay layer ranges from 13 to 30 feet BLS at in the area of Site 7. Intermediate-depth wells installed in areas where the clay layer is relatively close to the surface of the water table may not require a corresponding shallow well to monitor for shallow or floating contaminants. Monitoring well installations at locations where the clay is relatively shallow may result in completion of only one well; or require the use of 5-foot well screens in the intermediate-depth well; or require completing the intermediate well with a part of the screen in the clay. These determinations will be made in the field on a case-by-case basis.

Groundwater levels in the area of Site 7 range from less than 1.2 to 5.6 feet BLS. Depths of shallow wells installed at Site 7 during the RI/FS are expected to range from 10.5 to 14.5 feet BLS.

Actual depths of both shallow and intermediate wells will depend on site conditions at the boring locations. Actual locations of monitoring wells will depend on obtaining clearance for drilling activities and accessibility of the area to drilling equipment.

All wells will be constructed of flush-threaded, 2-inch-ID, Schedule 40 PVC riser pipe and well screen. Justification for the use of PVC well construction material is presented in Appendix B. A well screen slot size of 0.01 inch has been chosen based on the expected presence of silty sand and sand in the subsurface at Site 7. Well screens in associated well pairs should be positioned such that there is no overlap of the screened intervals. Ten-foot-long well screens will be used; however, 5-foot screens may be used in intermediate-depth wells as necessary to avoid overlap of screened intervals in associated wells of a well pair. Wells will be constructed and installed in conformance with USEPA Region IV SOPs (USEPA, 1991c) (Appendix C) and SOUTHNAVFACENGCOM guidelines (Appendix D).

Groundwater samples will be collected from all new and existing monitoring wells. Groundwater samples will be collected and analyzed in conformance with Level IV DQOs for analyses included in the CLP SOW, and Level III DQOs for analyses not included in the CLP SOW. Groundwater samples will be analyzed for TCL VOC, TCL SVOC, TCL pesticides and PCBs, TPH, TAL inorganics, TDS, and TSS. Both filtered and unfiltered groundwater samples will be submitted for TAL inorganic analyses. TCL volatile organic analysis of groundwater samples will use a low-concentration

method included in the CLP SOW that has lower detection limits than the usual CLP CRQLs. The lower detection limits are similar to ARARs for some volatile ogranic compounds.

If the sample results of the first round of groundwater sampling indicate the presence of site related contaminants, a second-round of groundwater samples will be collected for confirmation. The analyses performed on the second round of groundwater samples will be limited to include previously detected contaminants and will not necessarily include the entire TCL/TAL analyses. Level IV DQOs will be used for second round groundwater sampling and analyses included in the CLP SOW, and Level III DQOs for analyses not included in the CLP SOW. If the analytical results of the first round of groundwater samples from Site 7 do not reveal detectable levels of site-related organics and all inorganics are within background ranges, no further groundwater sampling will be conducted at Site 7.

Surface Water and Sediment Sampling Four surface water samples and four sediment samples (four "sets") will be collected from the drainage ditch north of Site 7 and the stream east of Site 7 (Figure 4-5). Collection of surface water and sediment samples will be dependent upon the presence of sufficient material to sample. If sample material is not present at a proposed location, alternate sample locations will be chosen if sample material is present elsewhere in the area of interest.

The purpose of sediment and surface water sampling is to provide data for evaluation of possible ecological and human exposure pathways and to assess the potential for contaminant transport.

Two sets of samples will be collected from the drainage ditch north of the site and south of 11th Street. One set from this ditch will be collected from a location hydraulically upgradient of Site 7. Two sets of samples will be collected from the stream east of the site at locations adjacent to and downgradient of Site 7.

Surface water and sediment samples will be collected and analyzed in conformance with Level IV DQOs for analyses included in the CLP SOW and Level III DQOs for analyses not included in the CLP SOW. Laboratory analyses will include TCL VOC, TCL SVOC, TCL pesticides and PCBs, TPH, and TAL inorganic compounds. In addition, surface water samples will be analyzed for TAL inorganics, TDS and TSS. Both filtered and unfiltered surface water samples will be submitted for TAL inorganic analyses. The TCL volatile organic analysis of surface water samples will use a low-concentration method. A low level CLP analysis is preferred (1991 SOW) because surface water ARARs are commonly below the CRQL associated with the 1988 CLP SOW.

4.10 INVESTIGATION ACTIVITIES COMMON TO ALL SITES. Investigation activities common to all seven sites include: aquifer characterization, screening of groundwater samples, ecological survey, public health survey, sample location survey, and decontamination and disposal of investigation waste.

4.10.1 Aquifer Characterization Six slug tests will be conducted at each site to obtain an estimate of the horizontal hydraulic conductivity of the surficial aquifer. This testing can provide estimates for calculating groundwater transport parameters, can potentially identify high hydraulic conductivity zones,

and can provide preliminary data for evaluating the feasibility of selected remedial actions.

The slug tests will include three shallow and three intermediate-depth wells belonging to three well pairs. Only rising-head slug tests will be performed on shallow wells screened across the water table. Both rising- and falling-head slug tests will be performed on intermediate-depth wells screened below the water table.

More extensive aquifer tests are not proposed for the RI because long-term pumping tests in contaminated aquifers are problematic and expensive. Typical problems that are associated with conducting pumping tests include disposal of contaminated water that must be handled as hazardous wastes, and concentration of contaminants at pumping wells. Because preliminary data indicate that little, if any, groundwater contamination exists at the sites, more detailed information regarding hydraulic conductivities is not needed at this time. If significant contamination is detected during the RI, more extensive tests can be designed based on slug-test data and in consideration of contaminants present.

4.10.2 Screening of Groundwater Samples New and existing monitoring wells will be screened for volatile organic contamination using a field GC. Level II DQOs will be used to collect and analyze groundwater samples for field screening. The purpose of this sampling is to assess the need for additional monitoring wells at the sites. For planning purposes, three additional monitoring well pairs are included in the RI field effort for use as needed based on results of screening of groundwater samples. As many as three monitoring well pairs will be installed downgradient of monitoring wells where field screening indicates that volatile organic contamination exists. The purpose of additional wells is to evaluate the horizontal and vertical extent of contamination as necessary to support the Baseline Risk Assessment, Feasibility Study, and selection and evaluation of remedial alternatives.

4.10.3 Ecological Survey An ecological survey consisting of an area reconnaissance, interviews, and records search will be conducted by an Ecological Risk Assessment specialist. The survey will be conducted to note potentially sensitive ecosystems and species that may be impacted by contaminants from the sites and to develop potential exposure pathways to be evaluated in the Baseline Risk Assessment.

The survey will consist of an informal visual identification of terrestrial vegetation cover types and terrestrial and aquatic wildlife. Local wildlife officials may also be contacted to determine terrestrial and aquatic species that are reported to be in the area or reported to inhabit the types of vegetative cover identified. Additional information may be collected for use in wetlands and floodplains assessments, including identification of soil types and wetland vegetation.

4.10.4 Public Health Survey A public health survey consisting of an area reconnaissance, interviews, and records search will be conducted by an ABB-ES Public-Health Risk Assessment specialist. The survey will be conducted to examine on-base and off-base communities and activities and to develop potential exposure pathways to be evaluated in the Baseline Risk Assessment.

4.10.5 Survey of Sampling Locations An elevation and location survey will be performed by a Mississippi-licensed surveyor under contract to ABB-ES to locate all sampling locations including monitoring wells (existing and new), soil borings, surface soil samples, surface water and sediment samples, and any other necessary control points. Sampling locations will be marked upon collection with wooden stakes and flagging tapes.

The inner casing (riser) for the monitoring wells will be surveyed for both horizontal and vertical control to a degree of accuracy of 0.1 and 0.01 foot, respectively. Other exploration locations will be marked in the field and will be surveyed for horizontal and vertical control to a degree of accuracy of 0.1 foot.

Sampling locations and other control points will be plotted on site-specific base maps and will be available in both digitized and hard-copy formats. In addition, the survey data will be organized and reported in accordance with *USEPA Locational Data Policy and Region IV Environmental Monitoring and Data Reporting Requirements* (Appendix E). These documents require the identification of sampling locations in terms of latitude/longitude coordinates in accordance with the FICCDC recommendations.

4.10.6 Decontamination In-house cleaning procedures, field cleaning procedures, and containment and disposal of wastewater and solvents will be performed in accordance with USEPA Region IV SOPs (USEPA 1991c) and are detailed in Section 2.1.5 of the SAP. This SAP section includes cleaning procedures for: sampling sounders and measurement tapes, ice chests and shipping containers, field-parameter measurement probes, organic-free water containers, and large equipment. In addition, Section 2.1.6 of the SAP includes a detailed description of decontamination staging area and fluid disposal practices.

4.11 SUMMARY OF SURVEY AND SAMPLING INVESTIGATIONS. The survey and sampling investigative activities can be divided into two categories: screening samples and samples collected for laboratory analysis. The estimated number of sampling points can be divided into two location categories: upgradient and background locations, and downgradient and source locations. Finally, the types of samples collected can be divided into investigation samples and QA/QC samples. The numbers and types of samples that are proposed for screening and for laboratory analysis at each of the seven sites and base-wide are summarized in Tables 4-2 through 4-10.

Table 4-2 Summary of Sample Screening Program RI/FS Workplan NCBC Gulfport Gulfport, Mississippi

	Screening VOAs							
Sample Type	Base-Wide	Site 1	Site 2	Site 3	Site 4	Site 5	Site 6	Site 7
Groundwater	2	15	12	11	11	9	11	9
Duplicate	1	2	2	2	2	1	2	1
Matrix spike	1	1	1	1	1	1	1	1
Matrix spike duplicate	1	1	1	1	1	1	1	1
Soil (Terraprobe)	NA	NA	NA	NA	NA	NA	28	NA
Duplicate							3	
Matrix spike							2	
Matrix spike duplicate							2	

Notes:

Includes screening for total petroleum hydrocarbons and volatile organic compounds.
All samples to be analyzed in conformance with Level II data quality objectives (DQOs).
VOAs = volatile organic analytes
NA = not applicable

Table 4-3 Summary of Laboratory Analytical Program, Base-Wide RI/FS Workplan NCBC Gulfport Gulfport, Mississippi

Sample Type	Number of Samples for Laboratory Analysis[1]						
	TCL-CLP VOAs	TCL-CLP SVOAs	TCL-CLP Pest/PCBs	TAL-CLP Inorganics	TPH	TDS	TSS
Subsurface Soil							
Source/downgradient	0	0	0	0	0	0	0
Background/upgradient	0	0	0	4	0	0	0
QC samples (number estimated)							
Trip Blank[2]	0	0	0	QA/QC samples are included under surface soil (same boring)	0	0	0
Rinsate Blank[3]	0	0	0		0	0	0
Duplicate[4]	0	0	0		0	0	0
Matrix spike[5]	0	0	0		0	0	0
Matrix spike duplicate[6]	0	0	0		0	0	0
Groundwater[7]							
Source/downgradient	0	0	0	0	0	0	0
Background/upgradient	2	2	2	4	2	2	2
QC samples (number estimated)							
Trip blank	1	0	0	0	0	0	0
Rinsate Blank	1	1	1	1	1	1	1
Duplicate	1	1	1	1	1	1	1
Matrix spike	1	1	1	1	1	0	0
Matrix spike duplicate	1	1	1	1	1	0	0

See notes at end of table.

Table 4-3 (Continued) Summary of Laboratory Analytical Program, Base-Wide RI/FS Workplan NCBC Gulfport Gulfport, Mississippi

Sample Type	Number of Samples for Laboratory Analysis[1]						
	TCL-CLP VOAs	TCL-CLP SVOAs	TCL-CLP Pest/PCBs	TAL-CLP Inorganics	TPH	TDS	TSS
Surface Water							
Source/downgradient	1	1	1	2	1	1	1
Background/upgradient	1	1	1	2	1	1	1
QC samples (number estimated)							
Trip blank	1	0	0	0	0	0	0
Rinsate blank	1	1	1	1	1	1	1
Duplicate	1	1	1	1	1	1	1
Matrix spike	1	1	1	1	1	0	0
Matrix spike duplicate	1	1	1	1	1	0	0
Sediment							
Source/downgradient	1	1	1	1	1	0	0
Background/upgradient	1	1	1	1	1	0	0
QC smples (number estimated)							
Trip blank	1	0	0	0	0	0	0
Rinsate blank	1	1	1	1	1	0	0
Duplicate	1	1	1	1	1	0	0
Matrix spike	1	1	1	1	1		
Matrix spike duplicate	1	1	1	1	1	0	0
Surface Soil							
Source/downgradient	0	0	0	0	0	0	0

See notes at end of table.

Table 4-3 (Continued) Summary of Laboratory Analytical Program, Base-Wide RI/FS Workplan NCBC Gulfport Gulfport, Mississippi

Sample Type	Number of Samples for Laboratory Analysis[1]						
	TCL-CLP VOAs	TCL-CLP SVOAs	TCL-CLP Pest/PCBs	TAL-CLP Inorganics	TPH	TDS	TSS
Background/upgradient	0	8	8	8	8	0	0
QC samples (number estimated)							
Trip blank	0	0	0	0	0	0	0
Rinsate blank	0	3	3	3	3	0	0
Duplicate	0	2	2	2	2	0	0
Matrix spike	0	1	1	1	1	0	0
Matrix spike duplicate	0	1	1	1	1	0	0

[1]To be analyzed in conformance with Level IV data quality objectives (DQOs).
[2]Trip blank frequency, one per cooler.
[3]Rinsate blank frequency, one per day.
[4]Duplicate frequency, 1 per 10 samples of each matrix.
[5]Matrix spike, 1 per 20 samples (or less) of each matrix shipped per day.
[6]Matrix spike duplicate, one duplicate of each matrix spike collected each day.
[7]Two new wells.

Notes: Additional program - specific QC samples include:
Preservative blanks, one set collected at the beginning and end of the program, and
Field blanks, one collected from each water source used during the program.

TCL-CLP = target compound list-contract laboratory program
VOAs = volatile organic analytes
SVOAs = semivolatile organic analytes
Pest/PCBs = pesticides and polychlorinated biphenyls
NR = not requested
QC = quality control
QA = quality assurance

Table 4-4 Summary of Laboratory Analytical Program, Site 1 RI/FS Workplan NCBC Gulfport Gulfport, Mississippi

Sample Type	Number of Samples for Laboratory Analysis[1]							
	TCL-CLP VOAs	TCL-CLP SVOAs	TCL-CLP Pest/PCBs	TAL-CLP Inorganics	TPH	TOC	TDS	TSS
Subsurface Soil								
Source/downgradient	16	16	16	16	16	12	0	0
Background/upgradient	8	8	8	8	8	0	0	0
QC samples (number estimated)								
Trip Blank[2]	6	0	0	0	0	0	0	0
Rinsate Blank[3]	6	6	6	6	6	6	0	0
Duplicate[4]	3	3	3	3	3	3	0	0
Matrix spike[5]	2	2	2	2	2	0	0	0
Matrix spike duplicate[6]	2	2	2	2	2	0	0	0
Groundwater[7]								
Source/downgradient	9	9	9	18	9	0	9	9
Background/upgradient	6	6	6	12	6	0	6	6
QC samples (number estimated)								
Trip blank	3	0	0	0	0	0	0	0
Rinsate Blank	3	3	3	3	3	0	3	3
Duplicate	2	2	2	2	2	0	2	2
Matrix spike	1	1	1	1	1	0	0	0
Matrix spike duplicate	1	1	1	1	1	0	0	0
Surface Water								
Source/downgradient	5	5	5	10	5	0	5	5
Background/upgradient	1	1	1	2	1	0	1	1
QC samples (number estimated)								
Trip blank	1	0	0	0	0	0	0	0
Rinsate blank	1	1	1	1	1	0	1	1
Duplicate	1	1	1	1	1	0	1	1
Matrix spike	1	1	1	1	1	0	0	0
Matrix spike duplicate	1	1	1	1	1	0	0	0
Sediment								
Source/Downgradient	5	5	5	5	5	0	0	0

See notes at end of table.

Table 4-4 (Continued) Summary of Laboratory Analytical Program, Site-1 RI/FS Workplan NCBC Gulfport Gulfport, Mississippi

Sample Type	Number of Samples for Laboratory Analysis[1]							
	TCL-CLP VOAs	TCL-CLP SVOAs	TCL-CLP Pest/PCBs	TAL-CLP Inorganics	TPH	TOC	TDS	TSS
Background/Upgradient	1	1	1	1	1	0	0	0
QC Samples (number estimated)								
Trip blank	1	0	0	0	0	0	0	0
Rinsate blank	1	1	1	1	1	0	0	0
Duplicate	1	1	1	1	1	0	0	0
Matrix spike	1	1	1	1	1	0	0	0
Matrix spike duplicate	1	1	1	1	1	0	0	0
Surface Soil								
Source/Downgradient	9	9	9	9	9	0	0	0
Background/Upgradient	0	0	0	0	0	0	0	0
QC Samples (number estimated)								
Trip blank	1	0	0	0	0	0	0	0
Rinsate blank	1	1	1	1	1	0	0	0
Duplicate	1	1	1	1	1	0	0	0
Matrix spike	1	1	1	1	1	0	0	0
Matrix spike duplicate	1	1	1	1	1	0	0	0

[1]To be analyzed in conformance with Level IV data quality objectives (DQOs).
[2]Trip blank frequency, one per cooler.
[3]Rinsate blank frequency, one per day.
[4]Duplicate frequency, 1 per 10 samples of each matrix.
[5]Matrix spike, 1 per 20 samples (or less) of each matrix shipped per day.
[6]Matrix spike duplicate, one duplicate of each matrix spike collected each day.
[7]Three existing wells and twelve new wells.

Notes: Additional program - specific QC samples include:
Preservative blanks, one set collected at the beginning and end of the program, and
Field blanks, one collected from each water source used during the program.

TCL-CLP = target compound list-contract laboratory program
VOAs = volatile organic analytes
SVOAs = semivolatile organic analytes
NR = not requested
QC = quality control
Pest/PCBs = pesticide/polychlorinated biphenyls

Table 4-5 Summary of Laboratory Analytical Program, Site 2 RI/FS Workplan NCBC Gulfport Gulfport, Mississippi

Sample Type	Number of Samples for Laboratory Analysis[1]							
	TCL-CLP VOAs	TCL-CLP SVOAs	TCL-CLP Pest/PCBs	TAL-CLP Inorganics	TPH	TOC	TDS	TSS
Subsurface Soil								
Source/downgradient	16	16	16	16	16	12	0	0
Background/upgradient	4	4	4	4	4	0	0	0
QC samples (number estimated)								
Trip blank[2]	4	0	0	0	0	0	0	0
Rinsate blank[3]	4	4	4	4	4	4	0	0
Duplicate[4]	2	2	2	2	2	2	0	0
Matrix spike[5]	1	1	1	1	1	0	0	0
Matrix spike duplicate[6]	1	1	1	1	1	0	0	0
Groundwater[7]								
Source/downgradient	8	8	8	16	8	0	8	8
Background/upgradient	4	4	4	8	4	0	4	4
QC samples (number estimated)								
Trip blank	3	0	0	0	0	0	0	0
Rinsate blank	3	3	3	3	3	0	3	3
Duplicate	2	2	2	2	2	0	2	2
Matrix spike	1	1	1	1	1	0	0	0
Matrix spike duplicate	1	1	1	1	1	0	0	0
Surface Water								
Source/downgradient	2	2	2	4	2	0	2	2
Background/upgradient	1	1	1	2	1	0	1	1
QC samples (number estimated)								
Trip blank	1	0	0	0	0	0	0	0
Rinsate blank	1	1	1	1	1	0	1	1
Duplicate	1	1	1	1	1	0	1	1
Matrix spike	1	1	1	1	1	0	0	0
Matrix spike duplicate	1	1	1	1	1	0	0	0
Sediment								
Source/downgradient	2	2	2	2	2	0	0	0

See notes at end of table.

Table 4-5 (Continued) Summary of Laboratory Analytical Program, Site 2 RI/FS Workplan NCBC Gulfport Gulfport, Mississippi

Sample Type	Number of Samples for Laboratory Analysis[1]							
	TCL-CLP VOAs	TCL-CLP SVOAs	TCL-CLP Pest/PCBs	TAL-CLP Inorganics	TPH	TOC	TDS	TSS
Background/upgradient	1	1	1	1	1	0	0	0
QC Samples (number estimated)								
Trip blank	1	0	0	0	0	0	0	0
Rinsate blank	1	1	1	1	1	0	0	0
Duplicate	1	1	1	1	1	0	0	0
Matrix spike	1	1	1	1	1	0	0	0
Matrix spike duplicate	1	1	1	1	1	0	0	0
Surface Soil								
Source/downgradient	11	11	11	11	11	0	0	0
Background/upgradient	0	0	0	0	0	0	0	0
QC Samples (number estimated)								
Trip blank	1	0	0	0	0	0	0	0
Rinsate blank	1	1	1	1	1	0	0	0
Duplicate	2	2	2	2	2	0	0	0
Matrix spike	1	1	1	1	1	0	0	0
Matrix spike duplicate	1	1	1	1	1	0	0	0

[1]To be analyzed in conformance with Level IV data quality objectives (DQOs).
[2]Trip blank frequency, one per cooler.
[3]Rinsate blank frequency, one per day.
[4]Duplicate frequency, 1 per 10 samples of each matrix.
[5]Matrix spike, 1 per 20 samples (or less) of each matrix shipped per day.
[6]Matrix spike duplicate, one duplicate of each matrix spike collected each day.
[7]Two existing wells and ten new wells.

Notes: Additional program - specific QC samples include:
Preservative blanks, one set collected at the beginning and end of the program, and
Field blanks, one collected from each water source used during the program.

TCL-CLP = target compound list-contract laboratory program
VOAs = volatile organic analytes
SVOAs = semivolatile organic analytes
Pest/PCBs = pesticide/polychlorinated biphenyls
NR = not requested
QC = quality control

Table 4-6 Summary of Laboratory Analytical Program, Site 3 RI/FS Workplan NCBC Gulfport Gulfport, Mississippi

Sample Type	Number of Samples for Laboratory Analysis[1]							
	TCL-CLP VOAs	TCL-CLP SVOAs	TCL-CLP Pest/PCBs	TAL-CLP Inorganics	TPH	TOC	TDS	TSS
Subsurface Soil								
Source/downgradient	8	8	8	8	8	9	0	0
Background/upgradient	4	4	4	4	4	0	0	0
QC samples (number estimated)								
Trip blank[2]	3	0	0	0	0	0	0	0
Rinsate blank[3]	3	3	3	3	3	3	0	0
Duplicate[4]	2	2	2	2	2	2	0	0
Matrix spike[5]	1	1	1	1	1	0	0	0
Matrix spike duplicate[6]	1	1	1	1	1	0	0	0
Groundwater[7]								
Source/downgradient	7	7	7	12	7	0	7	7
Background/upgradient	4	4	4	8	4	0	4	4
QC samples (number estimated)								
Trip blank	2	0	0	0	0	0	0	0
Rinsate blank	2	2	2	2	2	0	2	2
Duplicate	1	1	1	1	1	0	1	1
Matrix spike	1	1	1	1	1	0	0	0
Matrix spike duplicate	1	1	1	1	1	0	0	0
Surface Water								
Source/downgradient	2	2	2	4	2	0	2	2
Background/upgradient	2	2	2	4	2	0	2	2
QC samples (number estimated)								
Trip blank	1	0	0	0	0	0	0	0
Rinsate blank	1	1	1	1	1	0	1	1
Duplicate	1	1	1	1	1	0	1	1
Matrix spike	1	1	1	1	1	0	0	0
Matrix spike duplicate	1	1	1	1	1	0	0	0
Sediment								
Source/downgradient	2	2	2	2	2	0	0	0

See notes at end of table.

Table 4-6 (Continued) Summary of Laboratory Analytical Program, Site 3 RI/FS Workplan NCBC Gulfport Gulfport, Mississippi

Sample Type	Number of Samples for Laboratory Analysis[1]							
	TCL-CLP VOAs	TCL-CLP SVOAs	TCL-CLP Pest/PCBs	TAL-CLP Inorganics	TPH	TOC	TDS	TSS
Background/upgradient	2	2	2	2	2	0	0	0
QC Samples (number estimated)								
Trip blank	1	0	0	0	0	0	0	0
Rinsate blank	1	1	1	1	1	0	0	0
Duplicate	1	1	1	1	1	0	0	0
Matrix spike	1	1	1	1	1	0	0	0
Matrix spike duplicate	1	1	1	1	1	0	0	0
Surface Soil								
Source/downgradient	5	5	5	5	5	0	0	0
Background/upgradient	0	0	0	0	0	0	0	0
QC Samples (number estimated)								
Trip blank	1	0	0	0	0	0	0	0
Rinsate blank	1	1	1	1	1	0	0	0
Duplicate	1	1	1	1	1	0	0	0
Matrix spike	1	1	1	1	1	0	0	0
Matrix spike duplicate	1	1	1	1	1	0	0	0

[1]To be analyzed in conformance with Level IV data quality objectives (DQOs).
[2]Trip blank frequency, one per cooler.
[3]Rinsate blank frequency, one per day.
[4]Duplicate frequency, 1 per 10 samples of each matrix.
[5]Matrix spike, 1 per 20 samples (or less) of each matrix shipped per day.
[6]Matrix spike duplicate, one duplicate of each matrix spike collected each day.
[7]Three existing wells and six new wells.

Notes: Additional program - specific QC samples include:
Preservative blanks, one set collected at the beginning and end of the program, and
Field blanks, one collected from each water source used during the program.

TCL-CLP = target compound list-contract laboratory program
VOAs = volatile organic analytes
SVOAs = semivolatile organic analytes
Pest/PCBs = pesticide/polychlorinated biphenyls
NR = not requested
QC = quality control

Table 4-7 Summary of Laboratory Analytical Program, Site 4 RI/FS Workplan NCBC Gulfport Gulfport, Mississippi

Sample Type	Number of Samples for Laboratory Analysis[1]							
	TCL-CLP VOAs	TCL-CLP SVOAs	TCL-CLP Pest/PCBs	TAL-CLP Inorganics	TPH	TOC	TDS	TSS
Subsurface Soil								
Source/downgradient	12	12	12	12	12	9	0	0
Background/upgradient	4	4	4	4	4	0	0	0
QC samples (number estimated)								
Trip blank[2]	3	0	0	0	0	0	0	0
Rinsate blank[3]	3	3	3	3	3	3	0	0
Duplicate[4]	2	2	2	2	2	2	0	0
Matrix spike[5]	1	1	1	1	1	0	0	0
Matrix spike duplicate[6]	1	1	1	1	1	0	0	0
Groundwater[7]								
Source/downgradient	7	7	7	14	7	0	7	7
Background/upgradient	4	4	4	8	4	0	4	4
QC samples (number estimated)								
Trip blank	2	0	0	0	0	0	0	0
Rinsate blank	2	2	2	2	2	0	2	2
Duplicate	2	2	2	2	2	0	2	2
Matrix spike	1	1	1	1	1	0	0	0
Matrix spike duplicate	1	1	1	1	1	0	0	0
Surface Water								
Source/downgradient	3	3	3	6	3	0	3	3
Background/upgradient	1	1	1	2	1	0	1	1
QC samples (number estimated)								
Trip blank	1	0	0	0	0	0	0	0
Rinsate blank	1	1	1	1	1	0	1	1
Duplicate	1	1	1	1	1	0	1	1
Matrix spike	1	1	1	1	1	0	0	0
Matrix spike duplicate	1	1	1	1	1	0	0	0

See notes at end of table.

Table 4-7 (Continued) Summary of Laboratory Analytical Program, Site 4 RI/FS Workplan NCBC Gulfport Gulfport, Mississippi

Sample Type	Number of Samples for Laboratory Analysis[1]							
	TCL-CLP VOAs	TCL-CLP SVOAs	TCL-CLP Pest/PCBs	TAL-CLP Inorganics	TPH	TOC	TDS	TSS
Sediment								
Source/downgradient	3	3	3	3	3	0	0	0
Background/upgradient	1	1	1	1	1	0	0	0
QC Samples (number estimated)								
Trip blank	1	0	0	0	0	0	0	0
Rinsate blank	1	1	1	1	1	0	0	0
Duplicate	1	1	1	1	1	0	0	0
Matrix spike	1	1	1	1	1	0	0	0
Matrix spike duplicate	1	1	1	1	1	0	0	0
Surface Soil								
Source/downgradient	5	5	5	5	5	0	0	0
Background/upgradient	0	0	0	0	0	0	0	0
QC Samples (number estimated)								
Trip blank	1	0	0	0	0	0	0	0
Rinsate blank	1	1	1	1	1	0	0	0
Duplicate	1	1	1	1	1	0	0	0
Matrix spike	1	1	1	1	1	0	0	0
Matrix spike duplicate	1	1	1	1	1	0	0	0

[1]To be analyzed in conformance with Level IV data quality objectives (DQOs).
[2]Trip blank frequency, one per cooler.
[3]Rinsate blank frequency, one per day.
[4]Duplicate frequency, 1 per 10 samples of each matrix.
[5]Matrix spike, 1 per 20 samples (or less) of each matrix shipped per day.
[6]Matrix spike duplicate, one duplicate of each matrix spike collected each day.
[7]Three existing wells and eight new wells.

Notes: Additional program - specific QC samples include:
Preservative blanks, one set collected at the beginning and end of the program, and
Field blanks, one collected from each water source used during the program.

TCL-CLP = target compound list-contract laboratory program
VOAs = volatile organic analytes
SVOAs = semivolatile organic analytes
NR = not requested
Pest/PCBs = pesticide/polychlorinated biphenyls
QC = quality control

Table 4-8 Summary of Laboratory Analytical Program, Site 5 RI/FS Workplan NCBC Gulfport Gulfport, Mississippi

Sample Type	Number of Samples for Laboratory Analysis[1]							
	TCL-CLP VOAs	TCL-CLP SVOAs	TCL-CLP Pest/PCBs	TAL-CLP Inorganics	TPH	TOC	TDS	TSS
Subsurface Soil								
Source/downgradient	8	8	8	8	8	12	0	0
Background/upgradient	4	4	4	4	4	0	0	0
QC samples (number estimated)								
Trip blank[2]	3	0	0	0	0	0	0	0
Rinsate blank[3]	3	3	3	3	3	3	0	0
Duplicate[4]	2	2	2	2	2	2	0	0
Matrix spike[5]	1	1	1	1	1	0	0	0
Matrix spike duplicate[6]	1	1	1	1	1	0	0	0
Groundwater[7]								
Source/downgradient	6	6	6	12	6	0	6	6
Background/upgradient	3	3	3	6	3	0	3	3
QC samples (number estimated)								
Trip blank	2	0	0	0	0	0	0	0
Rinsate blank	2	2	2	2	2	0	2	2
Duplicate	1	1	1	1	1	0	1	1
Matrix spike	1	1	1	1	1	0	0	0
Matrix spike duplicate	1	1	1	1	1	0	0	0
Surface Water								
Source/downgradient	2	2	2	4	2	0	2	2
Background/upgradient	2	2	2	4	2	0	2	2
QC samples (number estimated)								
Trip blank	1	0	0	0	0	0	0	0
Rinsate blank	1	1	1	1	1	0	1	1
Duplicate	1	1	1	1	1	0	1	1
Matrix spike	1	1	1	1	1	0	0	0
Matrix spike duplicate	1	1	1	1	1	0	0	0

See notes at end of table.

Table 4-8 (Continued) Summary of Laboratory Analytical Program, Site 5 RI/FS Workplan NCBC Gulfport Gulfport, Mississippi

Sample Type	Number of Samples for Laboratory Analysis[1]							
	TCL-CLP VOAs	TCL-CLP SVOAs	TCL-CLP Pest/PCBs	TAL-CLP Inorganics	TPH	TOC	TDS	TSS
Sediment								
Source/downgradient	2	2	2	2	2	0	0	0
Background/upgradient	2	2	2	2	2	0	0	0
QC Samples (number estimated)								
Trip blank	1	0	0	0	0	0	0	0
Rinsate blank	1	1	1	1	1	0	0	0
Duplicate	1	1	1	1	1	0	0	0
Matrix spike	1	1	1	1	1	0	0	0
Matrix spike duplicate	1	1	1	1	1	0	0	0
Surface Soil								
Source/downgradient	6	6	6	6	6	0	0	0
Background/upgradient	0	0	0	0	0	0	0	0
QC Samples (number estimated)								
Trip blank	1	0	0	0	0	0	0	0
Rinsate blank	1	1	1	1	1	0	0	0
Duplicate	1	1	1	1	1	0	0	0
Matrix spike	1	1	1	1	1	0	0	0
Matrix spike duplicate	1	1	1	1	1	0	0	0

[1]To be analyzed in conformance with Level IV data quality objectives (DQOs).
[2]Trip blank frequency, one per cooler.
[3]Rinsate blank frequency, one per day.
[4]Duplicate frequency, 1 per 10 samples of each matrix.
[5]Matrix spike, 1 per 20 samples (or less) of each matrix shipped per day.
[6]Matrix spike duplicate, one duplicate of each matrix spike collected each day.
[7]Three existing wells and six new wells.

Notes: Additional program - specific QC samples include:
Preservative blanks, one set collected at the beginning and end of the program, and
Field blanks, one collected from each water source used during the program.

TCL-CLP = target compound list-contract laboratory program
VOAs = volatile organic analytes
SVOAs = semivolatile organic analytes
Pest/PCBs = pesticide/polychlorinated biphenyls
NR = not requested
QC = quality control

Table 4-9 Summary of Laboratory Analytical Program, Site 6 RI/FS Workplan NCBC Gulfport Gulfport, Mississippi

Sample Type	Number of Samples for Laboratory Analysis[1]							
	TCL-CLP VOAs	TCL-CLP SVOAs	TCL-CLP Pest/PCBs	TAL-CLP Inorganics	TPH	TOC	TDS	TSS
Subsurface Soil								
Source/downgradient	36	36	36	36	36	12	0	0
Background/upgradient	4	4	4	4	4	0	0	0
QC samples (number estimated)								
Trip blank[2]	7	0	0	0	0	0	0	0
Rinsate blank[3]	7	7	7	7	7	7	0	0
Duplicate[4]	4	4	4	4	4	4	0	0
Matrix spike[5]	2	2	2	2	2	0	0	0
Matrix spike duplicate[6]	2	2	2	2	2	0	0	0
Groundwater[7]								
Source/downgradient	8	8	8	16	8	0	8	8
Background/upgradient	3	3	3	6	3	0	3	3
QC samples (number estimated)								
Trip blank	2	0	0	0	0	0	0	0
Rinsate blank	2	2	2	2	2	0	2	2
Duplicate	2	2	2	2	2	0	2	2
Matrix spike	1	1	1	1	1	0	0	0
Matrix spike duplicate	1	1	1	1	1	0	0	0
Surface Water								
Source/downgradient	2	2	2	4	2	0	2	2
Background/upgradient	1	1	1	2	1	0	1	1
QC samples (number estimated)								
Trip blank	1	0	0	0	0	0	0	0
Rinsate blank	1	1	1	1	1	0	1	1
Duplicate	1	1	1	1	1	0	1	1
Matrix spike	1	1	1	1	1	0	0	0
Matrix spike duplicate	1	1	1	1	1	0	0	0
Sediment								
Source/downgradient	2	2	2	2	2	0	0	0

See notes at end of table.

Table 4-9 (Continued) Summary of Laboratory Analytical Program, Site 6 RI/FS Workplan NCBC Gulfport Gulfport, Mississippi

Sample Type	Number of Samples for Laboratory Analysis[1]							
	TCL-CLP VOAs	TCL-CLP SVOAs	TCL-CLP Pest/PCBs	TAL-CLP Inorganics	TPH	TOC	TDS	TSS
Background/upgradient	1	1	1	1	1	0	0	0
QC Samples (number estimated)								
Trip blank	1	0	0	0	0	0	0	0
Rinsate blank	1	1	1	1	1	0	0	0
Duplicate	1	1	1	1	1	0	0	0
Matrix spike	1	1	1	1	1	0	0	0
Matrix spike duplicate	1	1	1	1	1	0	0	0
Surface Soil[8]								
Source/downgradient	5	5	5	5	5	0	0	0
Background/upgradient	0	0	0	0	0	0	0	0
QC Samples (number estimated)								
Trip blank	1	0	0	0	0	0	0	0
Rinsate blank	1	1	1	1	1	0	0	0
Duplicate	1	1	1	1	1	0	0	0
Matrix spike	1	1	1	1	1	0	0	0
Matrix spike duplicate	1	1	1	1	1	0	0	0

[1]To be analyzed in conformance with Level IV data quality objectives (DQOs).
[2]Trip blank frequency, one per cooler.
[3]Rinsate blank frequency, one per day.
[4]Duplicate frequency, 1 per 10 samples of each matrix.
[5]Matrix spike, 1 per 20 samples (or less) of each matrix shipped per day.
[6]Matrix spike duplicate, one duplicate of each matrix spike collected each day.
[7]Three existing wells and eight new wells.
[8]Surface soil samples will also be analyzed for polychlorinated dibenzodioxins.

Notes: Additional program - specific QC samples include:
Preservative blanks, one set collected at the beginning and end of the program, and
Field blanks, one collected from each water source used during the program.

TCL-CLP = target compound list-contract laboratory program
VOAs = volatile organic analytes
SVOAs = semivolatile organic analytes
Pest/PCBs = pesticide/polychlorinated biphenyls
NR = not requested
QC = quality control

Table 4-10 Summary of Laboratory Analytical Program, Site 7 RI/FS Workplan NCBC Gulfport Gulfport, Mississippi

Sample Type	Number of Samples for Laboratory Analysis[1]							
	TCL-CLP VOAs	TCL-CLP SVOAs	TCL-CLP Pest/PCBs	TAL-CLP Inorganics	TPH	TOC	TDS	TSS
Subsurface Soil								
Source/downgradient	8	8	8	8	8	9	0	0
Background/upgradient	8	8	8	8	8	0	0	0
QC samples (number estimated)								
Trip blank[2]	3	0	0	0	0	0	0	0
Rinsate blank[3]	3	3	3	3	3	3	0	0
Duplicate[4]	2	2	2	2	2	2	0	0
Matrix spike[5]	1	1	1	1	1	0	0	0
Matrix spike duplicate[6]	1	1	1	1	1	0	0	0
Groundwater[7]								
Source/downgradient	6	6	6	12	6	0	6	6
Background/upgradient	3	3	3	6	3	0	3	3
QC samples (number estimated)								
Trip blank	2	0	0	0	0	0	0	0
Rinsate blank	2	2	2	2	2	0	2	2
Duplicate	1	1	1	2	1	0	1	1
Matrix spike	1	1	1	1	1	0	0	0
Matrix spike duplicate	1	1	1	1	1	0	0	0
Surface Water								
Source/downgradient	2	2	2	4	2	0	2	2
Background/upgradient	2	2	2	4	2	0	2	2
QC samples (number estimated)								
Trip blank	1	0	0	0	0	0	0	0
Rinsate blank	1	1	1	1	1	0	1	1
Duplicate	1	1	1	2	1	0	1	1
Matrix spike	1	1	1	1	1	0	0	0
Matrix spike duplicate	1	1	1	1	1	0	0	0
Sediment								
Source/downgradient	2	2	2	2	2	0	0	0

See notes at end of table.

Table 4-10 (Continued) Summary of Laboratory Analytical Program, Site 7 RI/FS Workplan NCBC Gulfport Gulfport, Mississippi

Sample Type	Number of Samples for Laboratory Analysis[1]							
	TCL-CLP VOAs	TCL-CLP SVOAs	TCL-CLP Pest/PCBs	TAL-CLP Inorganics	TPH	TOC	TDS	TSS
Background/upgradient	2	2	2	2	2	0	0	0
QC Samples (number estimated)								
Trip blank	1	0	0	0	0	0	0	0
Rinsate blank	1	1	1	1	1	0	0	0
Duplicate	1	1	1	1	1	0	0	0
Matrix spike	1	1	1	1	1	0	0	0
Matrix spike duplicate	1	1	1	1	1	0	0	0
Surface Soil								
Source/downgradient	4	4	4	4	4	0	0	0
Background/upgradient	0	0	0	0	0	0	0	0
QC Samples (number estimated)								
Trip blank	1	0	0	0	0	0	0	0
Rinsate blank	1	1	1	1	1	0	0	0
Duplicate	1	1	1	1	1	0	0	0
Matrix spike	1	1	1	1	1	0	0	0
Matrix spike duplicate	1	1	1	1	1	0	0	0

[1]To be analyzed in conformance with Level IV data quality objectives (DQOs).
[2]Trip blank frequency, one per cooler.
[3]Rinsate blank frequency, one per day.
[4]Duplicate frequency, 1 per 10 samples of each matrix.
[5]Matrix spike, 1 per 20 samples (or less) of each matrix shipped per day.
[6]Matrix spike duplicate, one duplicate of each matrix spike collected each day.
[7]One existing well and eight new wells.

Notes: Upgradient and downgradient directions are assumed at this time.
Additional program - specific QC samples include:
Preservative blanks, one set collected at the beginning and end of the program, and
Field blanks, one collected from each water source used during the program.

TCL-CLP = target compound list-contract laboratory program
VOAs = volatile organic analytes
SVOAs = semivolatile organic analytes
Pest/PCBs = pesticide/polychlorinated biphenyls
NR = not requested
QC = quality control

5.0 PROJECT MANAGEMENT

This section identifies key roles in the project organization, project deliverables, and the proposed project schedule.

5.1 ORGANIZATION.

5.1.1 Project Organization These RI/FS planning documents have been prepared under the CLEAN contract with SOUTHNAVFACENGCOM. Key positions in the project structure are highlighted below and the project organization is depicted in Figure 5-1.

SOUTHNAVFACENGCOM SOUTHNAVFACENGCOM is responsible for establishing policy and guidance for the CLEAN program. SOUTHNAVFACENGCOM awards contracts, approves funding, and has primary control of report release and interagency communication.

NCBC Gulfport Environmental Coordinator The environmental coordinator will coordinate and monitor RI/FS activities at NCBC Gulfport. The coordinator maintains a working relationship with local, State, and Federal regulatory agencies.

SOUTHNAVFACENGCOM Engineer-in-Charge (EIC) The SOUTHNAVFACENGCOM EIC is responsible for the technical and financial management of the RI/FS and design activities at NCBC Gulfport. The EIC is the primary project contact. He prepares the project statement of work; develops the project Site Management Plan; manages project scope, schedule, and budget; and provides technical review and approval of all deliverables. The EIC will be responsible for changes in the scope of work determined during Project Managers' Meetings.

Task Order Manager (TOM) The ABB-ES Task Order Manager for the NCBC Gulfport RI/FS is responsible for evaluating the appropriateness and adequacy of the technical and engineering services provided. The TOM is responsible for ABB-ES resource management and for ensuring that the project fulfills the requirements of the Contract Task Order. The TOM is responsible for the daily conduct of work, including integration of input from supporting disciplines and subcontractors.

RI Technical Leader The RI Technical Leader for RI field studies and the development of the RI report will be responsible for the quality and completeness of data gathered during the RI field program, including overall management and coordination of field work, and supervision and scheduling of work.

Field Operations Leader The primary Field Operations Leader will be responsible for ensuring that field activities are performed consistent with the project workplan and supporting documents. This will include appropriate logging and documentation of standard and approved drilling and monitoring well installation methods to ensure that pertinent drilling and testing information is obtained during the exploration program. Other responsibilities include oversight of sampling activities and site characterization studies.

Risk Assessment The Risk Assessment leader will be responsible for the public health and ecological assessment. The leader will plan and perform the risk assessment supported by RI data and will identify potential exposure pathways,

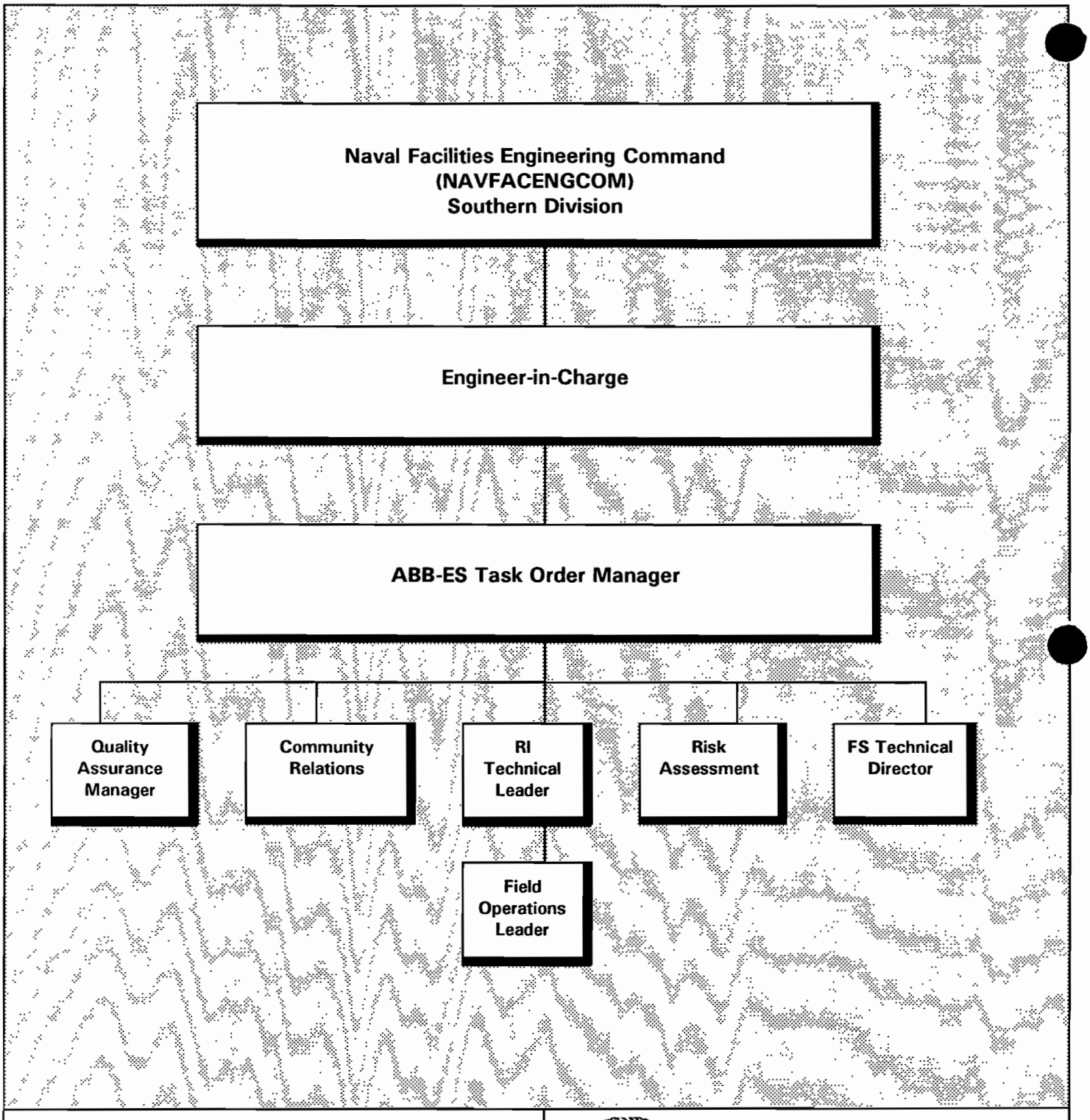

FIGURE 5-1
PROJECT ORGANIZATION

RI/FS WORK PLAN

NAVAL CONSTRUCTION BATTALION CENTER GULFPORT, MISSISSIPPI

evaluate available data, and propose compound target levels within acceptable risk ranges.

Quality Assurance Manager The Quality Assurance Manager will be responsible for ensuring that field and laboratory activities support DQOs and conform with the project workplan. The manager will perform periodic field and laboratory audits to monitor conformance with requirements.

FS Technical Director The FS Technical Director will be responsible for coordinating FS activities and for ensuring that the FS progresses in accordance with project plans and supporting documents. The director will oversee development of remedial alternatives and records of decision.

Community Relations The Community Relations Leader will be responsible for providing community relation support activities, if so requested by NCBC Gulfport. Support may include activities such as the development of fact sheets, press releases, and community interviews.

5.1.2 Program Organization The following highlights key individuals in the ABB-ES CLEAN program and the program organization is depicted in Figure 5-2.

SOUTHNAVFACENGCOM SOUTHNAVFACENGCOM is responsible for establishing policy and guidance for the CLEAN program. SOUTHNAVFACENGCOM awards contracts, approves funding, and has primary control of report release and interagency communication.

Corporate Officer The Corporate Officer and Vice-President of Southeastern Regional Operations is responsible for committing the corporate resources necessary to conduct the program work activities, supplying corporate-level input for problem resolution, and assisting the Task Order Manager as needed in project implementation.

Program Manager The ABB-ES CLEAN Program Manager is responsible for administration and management of the ABB-ES SOUTHNAVFACENGCOM CLEAN contract. The manager is able to perceive program needs, promote technology and other information transfers between various CLEAN projects, and direct resources as appropriate for effective and timely completion of program activities.

Internal Review Committee A Board of Technical Directors, consisting of senior technical staff from the ABB-ES team, supports the Task Order Manager by reviewing technical aspects of the project so that services (1) reflect the accumulated experience of the firm, (2) are produced according to corporate policy, and (3) meet the intended needs of the project. The primary function of the committee is to support the application of technically sound methodologies and the development of defensible data, interpretations, and conclusions.

QA Coordinator The Task Order Manager is supported by a QA Coordinator who will report to the Program Manager. The QA Coordinator, to be appointed, will oversee the implementation of appropriate NEESA and USEPA protocols. The QA Coordinator will also work with the Task Order Manager to establish QC procedures.

Health and Safety Coordinator The Health and Safety Coordinator is responsible for project team compliance with ABB-ES corporate requirements and the CLEAN Program HASP. Conformance with safety protocols will be assessed through periodic site visits and daily supervision by the site leaders.

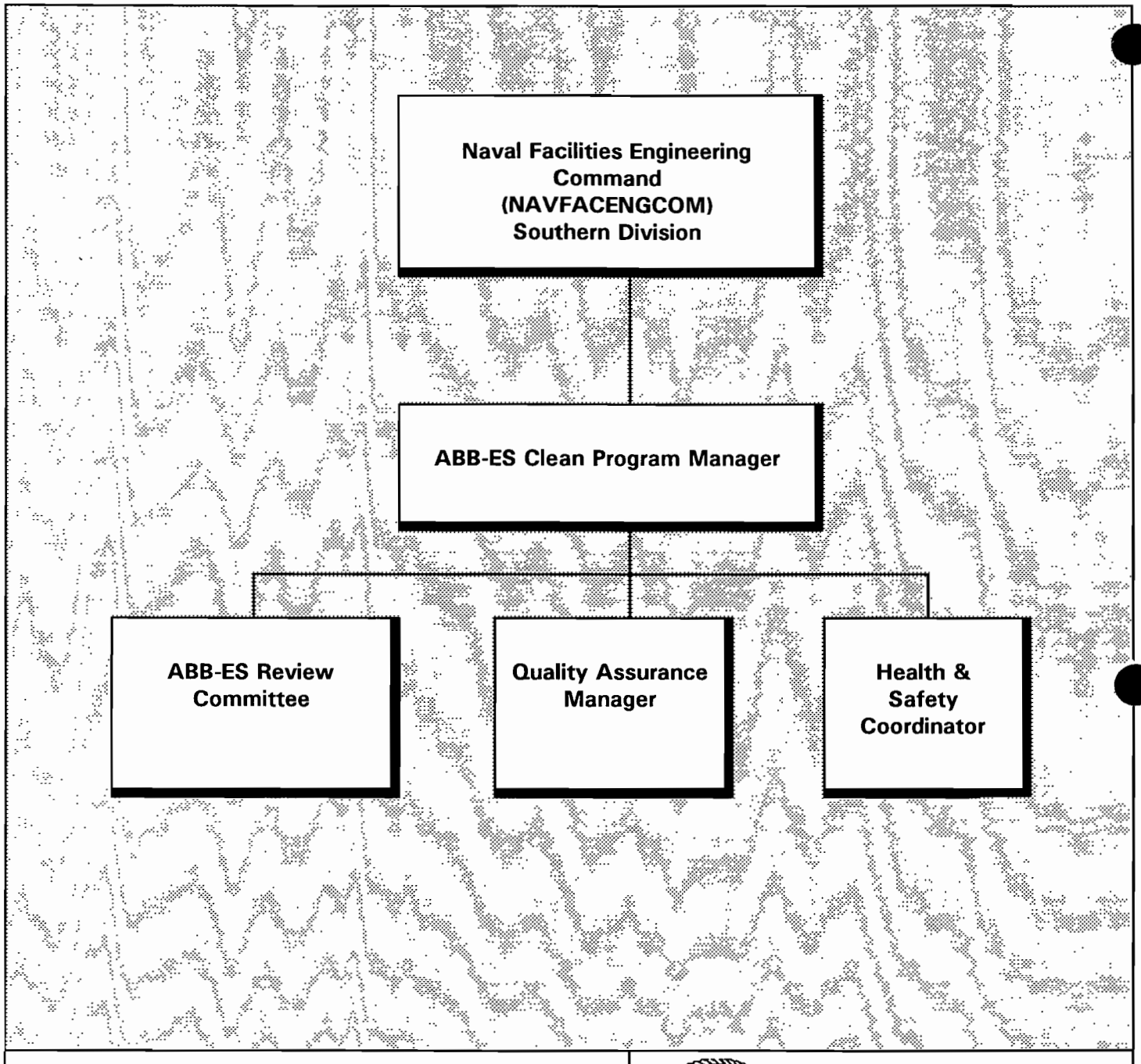

FIGURE 5-2
PROGRAM ORGANIZATION

RI/FS WORK PLAN

NAVAL CONSTRUCTION BATTALION CENTER GULFPORT, MISSISSIPPI

5.2 PROJECT SCHEDULE. The following lists the primary frame projected tasks of the RI/FS at NCBC Gulfport in execution time.

Projected Primary Tasks	Time to Complete
RI Field Work	11 Months
Final Draft RI Report	6 Months
Final RI Report	6 Months
Draft Proposed Plan	3 Months
Final Draft FS Report	8 Months
Final FS Report	6 Months
Final Draft Proposed Plan	6 Months
Final Proposed Plan	4 Months
Final Draft ROD	8 Months
Final ROD	12 Months

REFERENCES

Agency for Toxic Substances and Disease Registry (ATSDR), 1988a, *Toxicological Profile for Cadmium.*

Agency for Toxic Substances and Disease Registry (ATSDR), 1988b, *Toxicological Profile for Lindane.*

Boswell, E.H., 1979, *The Citronelle Aquifers in Mississippi*, U.S. Geological Survey: Water Resources Investigation 78-131, 1797. (No publishing month available.)

Bouwer, and Rice, R.C., 1976, *A Slug Test for Determining Hydraulic Conductivity of Unconfined Aquifers with Completely or Partially Penetrating Wells:* Water Resources Research, Vol. 12, No. 3, pp. 423-428.

Brown, G.F., Foster, V.M., Adams, R.W., Reed, E.W., and Padgett, H.D., Jr., 1944, *Geology and Groundwater Resources of the Coastal Area in Mississippi:* Mississippi Geological Survey, 1944. (No publishing month available.)

Cooper, H.H., Jr., Bredehoeft, J.D., and Papadopulos, I.S., 1967, *Response of a Finite-Diameter Well to an Instantaneous Charge of Water*: Water Resources Research, Vol. 3, No. 1, pp. 263-269.

Eisler, R., 1986, *Chromium Hazards to Fish, Wildlife, and Invertebrates*: A Synoptic Review: U.S. Fish and Wildlife Service Biological Report 85 (1.6), Patuxent Wildlife Research Center, Laurel, Maryland.

Eisler, R., 1987, *Arsenic Hazards to Fish, Wildlife, and Invertebrates*: A Synoptic Review: U.S. Fish and Wildlife Service Biological Report 85 (1.12), Patuxent Wildlife Research Center, Laurel, Maryland.

Eisler, R., 1988a, *Lead Hazards to Fish, Wildlife, and Invertebrates*: A Synoptic Review: U.S. Fish and Wildlife Service Biological Report 85 (1.14), Patuxent Wildlife Research Center, Laurel, Maryland.

Eisler, R., 1988b, *Mercury Hazards to Fish, Wildlife, and Invertebrates*: A Synoptic Review: U.S. Fish and Wildlife Service Biological Report 85 (1.10), Patuxent Wildlife Research Center, Laurel, Maryland.

Envirodyne Engineers, Inc., 1985, *Initial Assessment Study of Naval Construction Battalion Center, Gulfport, Mississippi*, UIC: N62605, prepared for Navy Assessment and Control of Installation Pollutants Department, Naval Energy and Environmental Support Activity; Port Hueneme, California, July 1985.

Foster, S. A. P.C. Chrostowski, 1987, *Inhalation Exposures to Volatile Organic Contaminants in the Shower.* Presented at 80th Annual Meeting at APCA, New York, Paper No. 87-42.6.

Harding Lawson Associates (HLA), 1987, *Draft Final Verification Report, Naval Construction Battalion Center, Gulfport, Mississippi,* prepared for Department of the Navy, Southern Division Naval Facilities Engineering Command, Houston, Texas, November 1987.

Hermens, J., H. Canton, P. Janssen, R. DeJong, 1984, *Quantative Structure - Activity Relationships and Toxicity Studies of Mixtures of Chemicals with Anaesthetic Potency*: Acute, Lethal, and Sublethal Toxicity to Daphnia magna, Aquatic Toxicology, Vol. 5, pp. 143-154.

Hermen, J.L.M., 1986, *Quantitative Structure-Activity Relationships in Aquatic Toxicology*: Pesticide Science, Vol. 71, pp. 287-296.

Integrated Risk Information System (IRIS), 1988, Volumes I and II. Chemical Files: U.S. Environmental Protection Agency.

Integrated Risk Information System (IRIS), 1991, Volumes I and II. Chemical Files: U.S. Environmental Protection Agency.

Lowe, E.N., 1921, *Plants of Mississippi, A List of Flowering Plants and Ferns,* Mississippi State Geological Survey, Bulletin No. 17.

Mississippi Air and Water Pollution Control Commission (AWPCC), 1978, *201 Facilities Plan for Harrison County, Mississippi;* Volume 8; 1978. (No publishing month available.)

National Institute for Occupational Safety and Health (NIOSH), 1985, *Registry of Toxic Effects of Chemical Substances:* NIOSH Publication No. 86-103.

National Oceanic and Atmospheric Administration, 1985, *Climates of the United States: Narrative Summaries, Tables, and Maps for Each State with Overview of State Climatologist Programs,* Third Edition, Gale Research Company, 1985. (No publishing month available.)

Naval Energy and Environmental Support Activity (NEESA), 1988, *Sampling and Chemical Analysis Quality Assurance Requirements for the Navy Installation Restoration Program, Naval Energy and Environment Support Activities:* NEESA 20.2-047B, Port Hueneme, California.

Newcome, R., et al, 1968, *Water for the Growing Needs of Harrison County, Mississippi,* Geological Water Supply Paper 1856, 1968. (No publishing month available.)

Newcome, R., Jr., 1975, *The Miocene Aquifer System in Mississippi,* U.S. Geological Survey, Water Resources Investigation 46-75, December 1975.

Plumb, R.H. Jr., 1981, *Procedures for Handling Sediment and Water Samples,* Technical Report, USEPA/CE-81-1.

Rand McNally and Company, 1991. Rand McNally Road Atlas, United States, Canada, Mexico; U.S.A.

Shows, Thad N., 1970, *Water Resources of Mississippi*, Mississippi Geological, Economic, and Topographical Survey, Bulletin 113, 1970. (No publishing month available.)

Soil Conservation Service, 1975, Soil Survey of Harrison County, Mississippi, U.S. Department of Agriculture, Washington, D.C., June 1975.

Southern Division Naval Facilities Engineering Command (SOUTHNAVFACENGCOM), 1984, *Master Plan for the Naval Construction Battalion Center, Gulfport, Mississippi*, 1984. (No publishing month available.)

U.S. Army Corps of Engineers (USACOE), 1989, *Federal Manual for Identification and Delineation of Jurisdictional Wetlands.*

U.S. Army Corps of Engineers (USACOE), 1989, *New Federal Wetland Delineation Manual.*

U.S. Army Corps of Engineers (USACOE), 1970, *Laboratory Soils Testing*, EM 1110-2-1906, Headquarters, Department of the Army, Office of the Chief of Engineers, Washington, D.C.

U.S. Environmental Protection Agency (USEPA), 1979, *Methods for Chemical Analysis of Water and Wastes*, USEPA-600/4-79-020, March 1979.

U.S. Environmental Protection Agency (USEPA), 1980, *Health Advisory for Endosulfan:* Office of Drinking Water, September 1980.

U.S. Environmental Protection Agency (USEPA), 1982, *USEPA Test Methods for Organic Chemical Analysis of Municipal and Industrial Wastewater*, USEPA-600/4-82-057, July 1982.

U.S. Environmental Protection Agency (USEPA), 1984, *Health Advisory for Benzene:* Office of Drinking Water, September 1984.

U.S. Environmental Protection Agency (USEPA), 1985a, *USEPA Test Methods for Evaluating Solid Waste-Physical/Chemical Methods*, SW-846, 2nd Edition.

U.S. Environmental Protection Agency (USEPA), 1985c, *Health Advisory for Vinyl Chloride:* Office of Drinking Water, September 1985.

U.S. Environmental Protection Agency (USEPA), 1986, *Test Methods for Evaluating Solid Waste, Physical/Chemical Methods* (SE846), 3rd Edition, OSWER, Washington, D.C., 1986.

U.S. Environmental Protection Agency (USEPA), 1987, *Data Quality Objectives for Remedial Response Activities, Development Process*, OSWER Directive 93550.7B, OERR, Washington, D.C.

U.S. Environmental Protection Agency (USEPA), 1988, *Guidance for Conducting Remedial Investigations and Feasibility Studies Under CERCLA:* Office of Emergency and Remedial Response, Directive 9355.3-01.

U.S. Environmental Protection Agency (USEPA), 1989a, *Risk Assessment Guidance for Superfund (RAGS)*, Volume 1, Human Health Evaluation Manual (Part A): Office of Emergency and Remedial Response, December 1989.

U.S. Environmental Protection Agency (USEPA), 1989b, *Risk Assessment Guidance for Superfund, Environmental Evaluation Manual:* Office of Emergency and Remedial Response, March 1989.

U.S. Environmental Protection Agency (USEPA), 1989c, *Exposure Assessment Group:* Office of Health and Environmental Assessment, EPA 6008-89043.

U.S. Environmental Protection Agency, 1990a, *Guidance for Data Usability in Risk Assessment (Interim Final):* Office of Emergency and Remedial Response EPA 540G-90008.

U.S. Environmental Protection Agency (USEPA), 1990b, *Health Effects Assessment Summary Tables (HEAST):* OSWER 0ERR9200.6-303(91-1), NTIS #PB91-921199.

U.S. Environmental Protection Agency (USEPA), 1991a, *Contract Laboratory Program, Statement of Work for Inorganics Analysis*: USEPA Document No. ILM01.0., 1991.

U.S. Environmental Protection Agency (USEPA), 1991b, *Contract Laboratory Program, Statement of Work for Organic Analysis:* USEPA Document No. OLM01.2, Revised January 1991.

U.S. Environmental Protection Agency (USEPA), 1991c, *Environmental Compliance Branch, Standard Operating Procedures and Quality Assurance Manual:* USEPA Region IV, Environmental Services Division, Athens, Georgia, February 1991.

U.S. Environmental Protection Agency (USEPA), 1991d, *Guide to Developing Superfund No Action, Interim Action, and Contingency Remedy RODs:* USEPA Superfund Publication 9355.3-02FS-3, 1991.

U.S. Environmental Protection Agency (USEPA), 1991e, *Human Health Evaluation Manual, Supplemental Guidance, Standard Default Exposure Factors:* Office of Emergency and Remedial Response, OSWER Directive 9285.6-03, March 1991.

U.S. Environmental Protection Agency (USEPA), 1991f, *Laboratory Data Validation: Functional Guidelines for Evaluation of Inorganic Analysis.*

U.S. Environmental Protection Agency (USEPA), 1991g, *Laboratory Data Validation: Functional Guidelines for Evaluation of Organic Analysis.*

U.S. Geological Survey, 1986, *Sources for Water Supplies in Mississippi*, A cooperative study sponsored by the U.S. Geological Survey and the Mississippi Research and Development Center, Jackson, Mississippi, Revised 1986. (No publishing month available.)

U.S. Geological Survey, 1989, *Geohydrology and Simulated Effects of Withdrawals on the Miocene Aquifer System in the Mississippi Gulf Coast Area*, A cooperative study sponsored by the U.S. Geological Survey and the Mississippi Research and Development Center, Jackson, Mississippi, Revised 1989 (No publishing month available.)

APPENDIX A

Appendix A

Verification Study Boring Logs

WELL AND PUMP DATA

Location of Well: GPT - 6-1

County: Harrison

Township: 8 N or S | Range Number: 11 E or W | Section No.: 6 | Fraction: — | NW SW

Address and City or Distance and Direction from Road Intersections

Property owner's name and address:

NCBC Gulfport
Gulfport, Mississippi

Sho[illegible]ation of well in section grid with an 'x'

N

S

1 mile

Addition Name

Block Number

Lot Number

Sketch map of well location

Well depth: 29.5 ft

Datum point from which all measurements are taken: Ground Surface

Method of Drilling: Cable tool; Direct rotary; Reverse rotary; Hollow rod; Air rotary; Jetted; Driven; Bucket auger; Flight auger; Dug; x ~~Hollow~~ stem auger

Use: Domestic; Irrigation; Test Well; Public supply; Municipal; Heating or cooling; Industrial; Commercial; X Monitoring

Casing Type: Steel; Galv; X PVC; SS; X Threaded; Welded; Solvent welded; Height above/~~below~~ surface 2.5 ft; Drive shoe? Yes ___ No ___

2 in to 3 ft Wgt ___ lb/ft Sch No 40 — Hole diameter 6-3/4 in to 29.5 ft

___ in to ___ ft Wgt ___ lb/ft Sch No ___ — ___ in to ___ ft

___ in to ___ ft Wgt ___ lb/ft Sch No ___ — ___ in to ___ ft

Remarks, Elevation, Source of Data, etc.

N 257302.20 E 404554.56 (MS State Plane)

Elevation 31.73 ft (NGVD)

Borehole data

Formation Log	Color	Hardness	From	To
Sand	Tan & Orngе	--	0	0.5
Silty Sand	Dk Brown	--	0.5	1
Silty Sand	Tan & Gray	dense	1	27.5
Fat Clay	Gray	soft	27.5	--

Intake Portion of Well

Screen type: Schedule 40 or open hole from ___ ft to ___ ft

Manufacturer: Trilock

Material: PVC Dia: 2 inches

Fittings: Threaded Length: 24.5

Set between 3 ft and 27.5 ft Slot .020

___ ft and ___ ft Slot ___

___ ft and ___ ft Slot ___

Method of installation ___

Filter Pack

Source: Pearl River Plant I Gradation: 10/20

Method of installation: poured Composition: silica

Volume used: 5.5 sacks Depth to top of f.p.: 2.5 ft

Grout

Used? X Yes No Volume used: 2.5 gal

Neat Cement X Bentonite

Method of installation: poured

Depth from 0 ft to 0.5 ft

from ___ ft to ___ ft

Development

Method: pumped Duration: 15 minutes

Dates: 3/24/87 Sand content after: 5 min 0

Chemicals used: none

Static water Level

3.5 ft X below above grade

Date measured: 3/24/87

Pumping Water Level

N/A ft below above grade Date ___

After ___ hrs pumping at ___ gpm

Specific Capacity: N/A

___ gpm/ft of drawdown at ___ hours

Date ___

Pump: N/A

Date installed ___ Type ___

Manufacturer ___ Model No ___

H.P. ___ Volts ___ Capacity ___

Depth of pump intake setting ___ No. of stages ___

Oil Water lubrication Power source ___

Material of drop pipe ___ bowls ___

shafting ___ impellers ___ Bowl dia ___

Column pipe dia ___ Length ___ Modifications ___

Well Head Completion

Pitless adaptor Basement offset Distance above grade: 2.5 ft

Nearest Sources of Possible Contamination

___ ft Direction ___ Type ___

Well disinfected upon completion? Yes No

Geophysical Logs Run

No

Water Quality

Sample taken X Yes

Where analyzed: JTC Environmental Consultants, Inc.

Name and Address

Name of Driller: Southwestern Laboratories, Inc.

State License Number

Date well completed: 3/24/87

WELL MAINTENANCE RECORD

Problem	Corrective Action Taken	Date	Specific Cap (gpm/ft of dra	
			Before	

DEPARTMENT OF THE NAVY
SOUTHERN DIVISION
NAVAL FACILITIES ENGINEERING COMMAND
2155 EAGLE DR P O BOX 10068
CHARLESTON S C 29411-0068

WELL DATA REPORT

WELL NUMBER GPT - 6-2 AREA 6

DATE OF INSTALLATION 3/17/87

WELL HOLE DATA

Drill Date 3/17/87 Well Driller Southwestern Laboratories, Inc.

Depth of Boring 23 ft Purpose of Boring Soil Sampling and Monitoring Well Installation

Drilling Method Hollow-stem auger Mud Type None

WATER LEVEL DATA (All measurements from top of casing)

Water Level 6.65 Date of Measurement 3/24/87

DEVELOPMENT DATA

Development Method Pumped

Length of Time Developed 30 minutes

LOCATION OF BOREHOLE INFORMATION

Drillers Log X Geophysical Log

Physical Core X Cutting Samples

Water Level Observations 6.72' on 3/30/87

DRILLED BY S. W. Labs SCCWD#

DEVELOPED BY HLA SCCWD#

TECHNICAL OVERSIGHT BY HLA

DEPARTMENT OF THE NAVY
SOUTHERN DIVISION
NAVAL FACILITIES ENGINEERING COMMAND
2155 EAGLE DR., P.O. BOX 10068
CHARLESTON S C 29411-0068

WELL CONSTRUCTION DETAILS

WELL NUMBER GPT - 6-2

DATE OF INSTALLATION 3/17/87

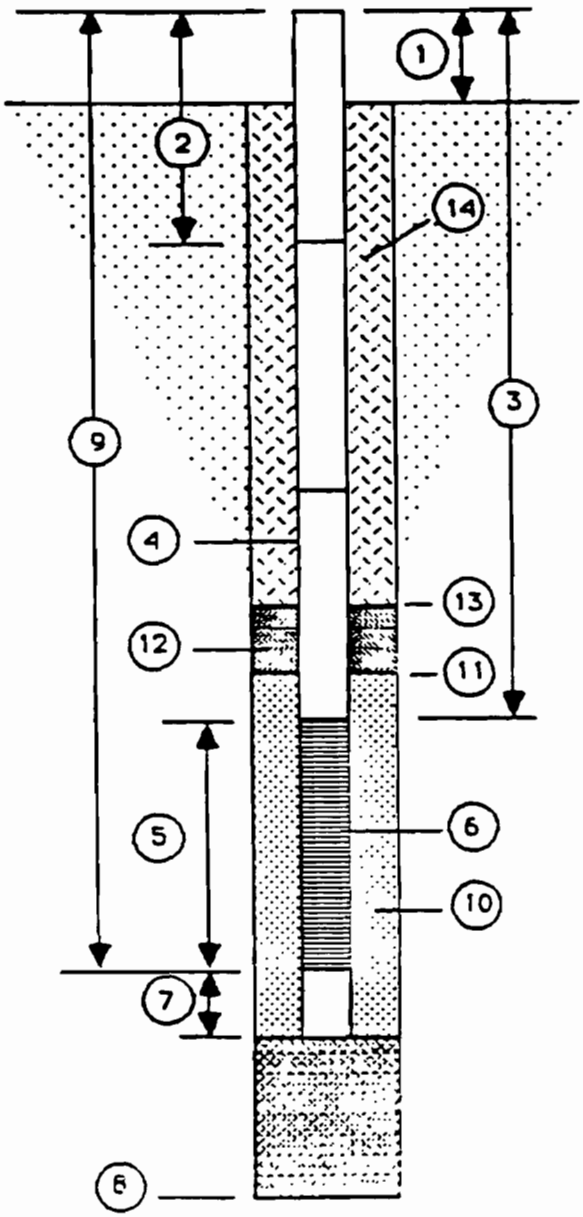

1. Height of Casing above ground 2.5 ft
2. Depth to first Coupling 5.5 ft

   Coupling Interval Depths 15.5 ft
3. Total Length of Blank Pipe 5.5 ft
4. Type of Blank Pipe Schedule 40 PVC
5. Length of Screen 19 ft
6. Type of Screen Sch. 40 PVC, 0.020 slotted
7. Length of Sump N/A
8. Total Depth of Boring 23 ft Hole Diameter 6-3/4 in
9. Depth To Bottom of Screen 24.5 ft
10. Type of Screen Filter No. 1 sand

    Quantity Used _____ Size 10/20 U/C _____
11. Depth To Top of Filter 2.5 ft
12. Type of Seal 1/2-inch bentonite pellets

    Quantity Used 30 lbs.
13. Depth To Top of Seal 0.5 ft
14. Type of Grout cement-bentonite

    Grout Mixture 20:1

    Method of Placement poured

COMMENTS ON INSTALLATION

WELL AND PUMP DATA

Location of Well GPT - 6-2

County	Township Number	Range Number	Section No.	Fraction	
Harrison	8 N or S	11 E or W	6	—	NW SW

Property owner's name and address

NCBC Gulfport
Gulfport, Mississippi

Street Address and City or Distance and Direction from Road Intersections

Sketch map of well location

N

S

1 mile

Addition Name

Block Number

Lot Number

Remarks, Elevation, Source of Data, etc.

257302.82 E 404643.28 (MS State Plane)

Elevation 31.91 ft (NGVD)

Borehole data

Formation Log	Color	Hardness	From	To
Topsoil	Brown	--	0	0.3
Clayey Sand	Tan	med dns	0.3	5.2
Sand	Tan & Brwn	med dns	5.2	23
Fat Clay	Gray	soft	23	--

Well depth 23 ft

Datum point from which all measurements are taken Ground Surface

Method of Drilling
[ ] Cable tool [ ] Hollow rod [ ] Driven [ ] Dug
[ ] Direct rotary [ ] Air rotary [ ] Bucket auger [X] Hollow stem auger
[ ] Reverse rotary [ ] Jetted [ ] Flight auger

Use
[ ] Domestic [ ] Public supply [ ] Industrial [ ]
[ ] Irrigation [ ] Municipal [ ] Commercial
[ ] Test Well [ ] Heating or cooling [X] Monitoring

Casing Type
[ ] Steel [X] Threaded Height above/below surface 2.5 ft
[ ] Galv [ ] Welded
[X] PVC [ ] Solvent welded Drive shoe? Yes ___ No ___
[ ] SS

2 in to 3 ft Wgt ___ lb/ft Sch No 40 Hole diameter 6-3/4 in to =2
___ in to ___ ft Wgt ___ lb/ft Sch No ___ in to ___
___ in to ___ ft Wgt ___ lb/ft Sch No ___ in to ___

Intake Portion of Well
Screen type Schedule 40 or open hole from ___ ft to ___ ft
Manufacturer Trilock
Material PVC Dia 2 inches
Fittings Threaded Length 19 ft
Set between 3 ft and 23 ft Slot .020
___ ft and ___ ft Slot ___
___ ft and ___ ft Slot ___
Method of installation ___

Filter Pack
Source Pearl River Plant I Gradation 10/20
Method of installation poured Composition silica
Volume used 2.5 sacks Depth to top of f.p. 2.5 ft

Grout
Used? [X] Yes [ ] No Volume used ___
[ ] Neat Cement [X] Bentonite [ ] ___
Method of installation poured
Depth from 0 ft to 0.5 ft
from ___ ft to ___ ft

Development
Method pumped Duration 30 minutes
Dates 3/24/87 Sand content after 10 min 0
Chemicals used none

Static Water Level
4.15 ft [X] below [ ] above grade
Date measured 3/24/87

Pumping Water Level
N/A ft below above grade Date ___
After ___ hrs pumping at ___ gpm

Specific Capacity N/A gpm/ft of drawdown at ___ hours
Date ___

Pump
Date installed N/A Type ___
Manufacturer ___ Model No ___
H.P. ___ Volts ___ Capacity ___
Depth of pump intake setting ___ No. of stages ___
[ ] Oil [ ] Water lubrication Power source ___
Material of drop pipe ___ bowls ___
shafting ___ impellers ___ Bowl dia ___
Column pipe dia ___ Length ___ Modifications ___

Well Head Completion
Pitless adaptor Basement offset Distance above grade 2.5 ft

Nearest Sources of Possible Contamination
___ ft Direction ___ Type ___
Well disinfected upon completion? Yes No

Geophysical Logs Run

No

Water Quality
Sample taken? [X] Yes No
Where analyzed JTC Environmental Consultants, Inc.

Contractor Name and Address

Name of Driller Southwestern Laboratories, Inc.

State License Number A-5

Date well completed 3/24/87

WELL MAINTENANCE RECORD

Problem	Corrective Action Taken	Date	Specific Cape (gpm/ft of dra	
			Before	Af

DEPARTMENT OF THE NAVY
SOUTHERN DIVISION
NAVAL FACILITIES ENGINEERING COMMAND
2155 EAGLE DR P O BOX 10068
CHARLESTON, S C. 29411-0068

WELL DATA REPORT

WELL NUMBER GPT - 6-3 AREA 6

DATE OF INSTALLATION 3/16/87

WELL HOLE DATA

Drill Date 3/16/87 Well Driller Southwestern Laboratories, Inc.

Depth of Boring 24 ft Purpose of Boring Soil Sampling and Monitoring Well Installation

Drilling Method Hollow-stem auger Mud Type None

WATER LEVEL DATA (All measurements from top of casing)

Water Level 4.0 ft Date of Measurement 3/23/87

DEVELOPMENT DATA

Development Method Pumped

Length of Time Developed 15 minutes

LOCATION OF BOREHOLE INFORMATION

Drillers Log X Geophysical Log

Physical Core X Cutting Samples

Water Level Observations

DRILLED BY S.W. Labs SCCWD#

DEVELOPED BY HLA SCCWD#

TECHNICAL OVERSIGHT BY HLA

DEPARTMENT OF THE NAVY
SOUTHERN DIVISION
NAVAL FACILITIES ENGINEERING COMMAND
2155 EAGLE DR., P.O BOX 10068
CHARLESTON S C 29411-0068

WELL CONSTRUCTION DETAILS

WELL NUMBER GPT - 6-3

DATE OF INSTALLATION 3/16/87

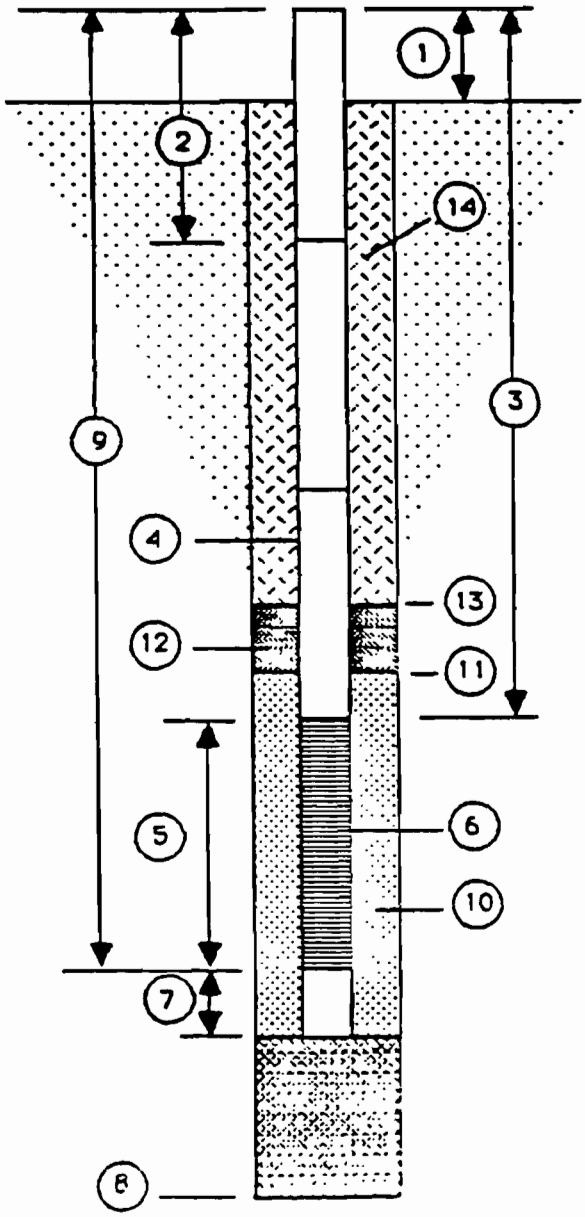

1. Height of Casing above ground 2.1 ft
2. Depth to first Coupling 5.1 ft

   Coupling Interval Depths 15.1 ft
3. Total Length of Blank Pipe 5.1 ft
4. Type of Blank Pipe Schedule 40 PVC
5. Length of Screen 19 ft
6. Type of Screen Schedule 40 PVC, .020 slotted
7. Length of Sump N/A
8. Total Depth of Boring 24 ft Hole Diameter 6-3/4 in
9. Depth To Bottom of Screen 24.1 ft
10. Type of Screen Filter No. 1 sand

    Quantity Used 500 lbs Size 10/20 U/C
11. Depth To Top of Filter 2 ft
12. Type of Seal 1/2-inch bentonite pellets

    Quantity Used 25 lbs.
13. Depth To Top of Seal 0.5 ft
14. Type of Grout cement-bentonite

    Grout Mixture 20:1

    Method of Placement poured

COMMENTS ON INSTALLATION

WELL AND PUMP DATA

Location of Well GPT - 6-3

County	Township Number	Range Number	Section No.	Fraction	
Harrison	8 N or S	11 E or W	6	—	NW SW ¼ ¼ ¼

Township

Street Address and City or Distance and Direction from Road Intersections

Property owner's name and address

NCBC Gulfport
Gulfport, Mississippi

Location of well in section grid with an 'x' — **Sketch map of well location**

N

S

1 mile

Addition Name

Block Number

Lot Number

Remarks, Elevation, Source of Data, etc.

N 257369.86 E 404501.02 (MS State Plane)

Elevation 28.27 ft (NGVD)

Borehole data

Formation Log	Color	Hardness	From	To
Topsoil	Brown	--	0	.3
Sand	Tan & Brown	loose	.3	22
Fat Clay	Gray	soft	22	--

Well depth 22 ft

Datum point from which all measurements are taken Ground Surface

Method of Drilling
☐ Cable tool ☐ Hollow rod ☐ Driven ☐ Dug
☐ Direct rotary ☐ Air rotary ☐ Bucket auger X Hollow
☐ Reverse rotary ☐ Jetted ☐ Flight auger stem auger

Use
☐ Domestic ☐ Public supply ☐ Industrial ☐
☐ Irrigation ☐ Municipal ☐ Commercial
☐ Test Well ☐ Heating or cooling X Monitoring

Casing Type
☐ Steel ☒ Threaded Height above/~~below~~ surface 2.1 ft
☐ Galv ☐ Welded
X PVC ☐ Solvent welded Drive shoe? Yes ___ No ___
☐ SS

2 in to 3 ft Wgt ___ lb/ft Sch No 40 — Hole diameter 6-3/4 in to 24
___ in to ___ ft Wgt ___ lb/ft Sch No ___ — ___ in to ___
___ in to ___ ft Wgt ___ lb/ft Sch No ___ — ___ in to ___

Intake Portion of Well
Screen type Schedule 40 or open hole from ___ ft to ___ ft
Manufacturer Trilock
Material PVC Dia 2 inches
Fittings Threaded Length 19 ft
Set between 3 ft and 22 ft Slot .020
___ ft and ___ ft Slot ___
___ ft and ___ ft Slot ___
Method of installation ___

Filter Pack
Source Pearl River Plant I Gradation 10/20
Method of installation poured Composition silica
Volume used 5 sacks Depth to top of f.p. 2 ft

Grout
Used? X Yes ☐ No Volume used 2.5 gal
☐ Neat Cement X Bentonite ☐
Method of installation poured
Depth from 0 ft to 1 ft
from ___ ft to ___ ft

Development
Method pumped Duration 15 minutes
Dates 3/23/87 Sand content after 5-min 0
Chemicals used none

Static Water Level
1.9 ft X below ☐ above grade
Date measured 3/23/87

Pumping Water Level
N/A ft ☐ below ☐ above grade Date ___
After ___ hrs pumping at ___ gpm

Specific Capacity N/A gpm/ft of drawdown at ___ hours
Date ___

Pump
Date installed N/A Type ___
Manufacturer ___ Model No ___
H.P. ___ Volts ___ Capacity ___
Depth of pump intake setting ___ No. of stages ___
☐ Oil ☐ Water lubrication Power source ___
Material of drop pipe ___ bowls ___
shafting ___ impellers ___ Bowl dia ___
Column pipe dia ___ Length ___ Modifications ___

Well Head Completion
Pitless adaptor Basement offset Distance above grade 2.5 ft

Nearest Sources of Possible Contamination
___ ft Direction ___ Type ___
Well disinfected upon completion? Yes No

Geophysical Logs Run

No

Water Quality
Sample taken? X Yes ☐ No
Where analyzed JTC Environmental Consultants, Inc.

Name and Address

Name of Driller Southwestern Laboratories, Inc.

State License Number ___ A-9

Date well completed 3/23/87

WELL MAINTENANCE RECORD

Problem	Corrective Action Taken	Date	Specific Capac (gpm/ft of drawr	ter
			Before	

DEPARTMENT OF THE NAVY
SOUTHERN DIVISION
NAVAL FACILITIES ENGINEERING COMMAND
2155 EAGLE DR P O BOX 10068
CHARLESTON S C 29411-0068

WELL DATA REPORT

WELL NUMBER GPT - 1-1 AREA 1

DATE OF INSTALLATION 3/21/87

WELL HOLE DATA

Drill Date 3/21/87 Well Driller Southwestern Laboratories, Inc.

Depth of Boring 30 ft Purpose of Boring Soil Sampling and Monitoring Well Installation

Drilling Method Hollow-stem auger Mud Type None

WATER LEVEL DATA (All measurements from top of casing)

Water Level 4.5 ft Date of Measurement 3/23/87

DEVELOPMENT DATA

Development Method Pumping

Length of Time Developed 15 minutes

LOCATION OF BOREHOLE INFORMATION

Drillers Log X Geophysical Log

Physical Core X Cutting Samples

Water Level Observations 3.69' on 3/30/87

DRILLED BY S.W. Labs SCCWD#

DEVELOPED BY HLA SCCWD#

TECHNICAL OVERSIGHT BY HLA

DEPARTMENT OF THE NAVY
SOUTHERN DIVISION
NAVAL FACILITIES ENGINEERING COMMAND
2155 EAGLE DR. P O BOX 10068
CHARLESTON S C 29411-0068

WELL CONSTRUCTION DETAILS

WELL NUMBER GPT - 1-1

DATE OF INSTALLATION 3/21/87

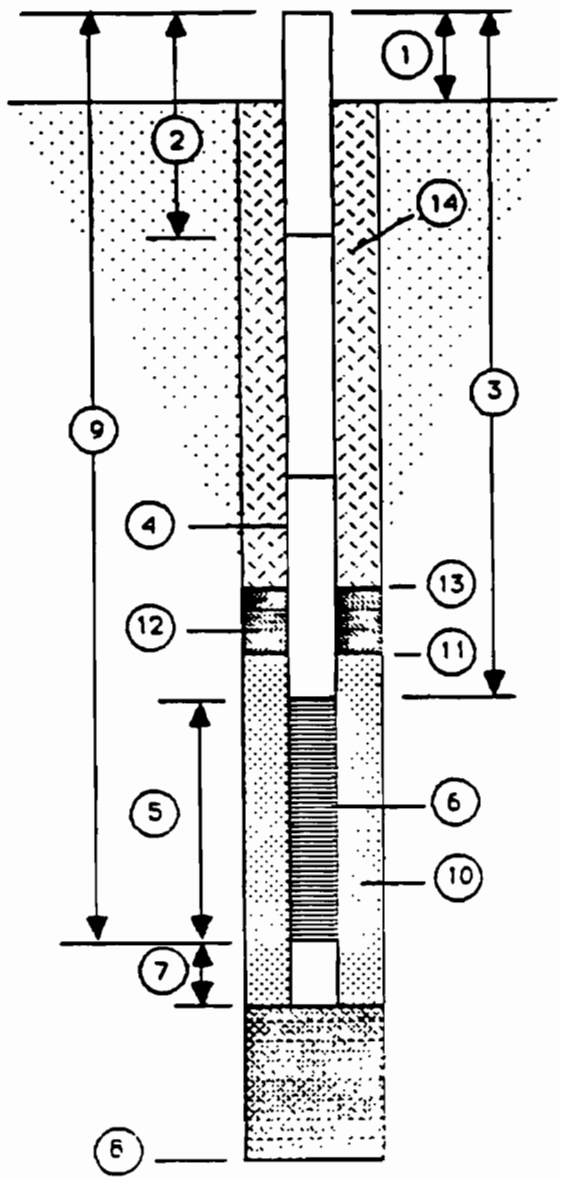

1. Height of Casing above ground 2.5 ft
2. Depth to first Coupling 5.5 ft

   Coupling Interval Depths 15.5 ft, 25.5 ft
3. Total Length of Blank Pipe 5.5 ft
4. Type of Blank Pipe Schedule 40 PVC
5. Length of Screen 27 ft
6. Type of Screen Schedule 40 PVC, .020 slotted
7. Length of Sump N/A
8. Total Depth of Boring 30 ft Hole Diameter 6 3/4 in
9. Depth To Bottom of Screen 32.5 ft
10. Type of Screen Filter #1 sand

    Quantity Used 600 lbs. Size 10/20 U/C
11. Depth To Top of Filter 2 ft
12. Type of Seal 1/2 inch bentonite pellets

    Quantity Used 12 pounds
13. Depth To Top of Seal 1 ft
14. Type of Grout cement-bentonite

    Grout Mixture 20:1

    Method of Placement poured

COMMENTS ON INSTALLATION

WELL AND PUMP DATA

Location of Well GPT - 1-1

County	Township Number	Range Number	Section No.	Fraction
Harrison	8 N or S	11 E or W	6	SW NW

Address and City or Distance and Direction from Road Intersections

Property owner's name and address

NCBC Gulfport
Gulfport, Mississippi

Show exact location of well in section grid with an 'x' — **Sketch map of well location**

N
S
1 mile

Addition Name
Block Number
Lot Number

Remarks, Elevation, Source of Data, etc.

N 258393.57 E 404757.81 (MS State Plane)

Elevation 28.19 ft (NGVD)

Borehole data

Formation Log	Color	Hardness	From	To
Topsoil	Brown	soft	0	0.1
Silty Sand	Tan & Gry	med dense	0.1	3.5
Silty Sand	Dk Gray	loose	3.5	4.6
Silty Sand	Dk Brown	dense	4.6	29
Sandy Fat Clay	Gray	soft	29	--

Well depth 30 ft

Datum point from which all measurements are taken Ground Surface

Method of Drilling
☐ Cable tool ☐ Hollow rod ☐ Driven ☐ Dug
☐ Direct rotary ☐ Air rotary ☐ Bucket auger ☒ Hollow-stem auger
☐ Reverse rotary ☐ Jetted ☐ Flight auger

Use
☐ Domestic ☐ Public supply ☐ Industrial ☐ ____
☐ Irrigation ☐ Municipal ☐ Commercial
☐ Test Well ☐ Heating or cooling ☒ Monitoring

Casing Type
☐ Steel ☒ Threaded ☐ Height above/below surface 2.5 ft
☐ Galv ☐ Welded ☐ Drive shoe? Yes ___ No ___
☒ PVC ☐ Solvent welded
☐ SS

				Hole diameter
2 in to 3 ft	Wgt ___ lb/ft	Sch No 40		6-3/4 in to 30 ft
___ in to ___ ft	Wgt ___ lb/ft	Sch No ___		___ in to ___ ft
___ in to ___ ft	Wgt ___ lb/ft	Sch No ___		___ in to ___ ft

Intake Portion of Well
Screen type Schedule 40 or open hole from ___ ft to ___ ft
Manufacturer Triloc
Material PVC Dia ___
Fittings Threaded Length ___
Set between 3 ft and 30 ft Slot .020
___ ft and ___ ft Slot ___
___ ft and ___ ft Slot ___
Method of installation ___

Filter Pack Pearl River Plant I
Source ___ Gradation 10/20
Method of installation poured Composition silica
Volume used 6 sacks Depth to top of fp 2 ft

Grout
Used? ☒ Yes ☐ No Volume used 2.5 gal
☐ Neat Cement ☒ Bentonite
Method of installation poured
Depth from 0 ft to 2 ft
from ___ ft to ___ ft

Development
Method pumped Duration 15 min
Dates 3/23/87 Sand content after 15 min 0
Chemicals used none

Static Water Level
2.0 ft ☒ below ☐ above grade
Date measured 3/23/87

Pumping Water Level
N/A ft below ☐ above grade Date ___
After ___ hrs pumping at ___ gpm

Specific Capacity
N/A gpm/ft of drawdown at ___ hours
Date ___

Pump
Date installed N/A Type ___
Manufacturer ___ Model No ___
HP ___ Volts ___ Capacity ___
Depth of pump intake setting ___ No of stages ___
☐ Oil ☐ Water lubrication Power source ___
Material of drop pipe ___ bowls ___
shafting ___ impellers ___ Bowl dia ___
Column pipe dia ___ Length ___ Modifications ___

Well Head Completion
Pitless adaptor Basement offset Distance above grade 2.5 ft

Nearest Sources of Possible Contamination
___ ft Direction ___ Type ___
Well disinfected upon completion? Yes No

Geophysical Logs Run

Contractor Name and Address

Name of Driller Southwestern Laboratories, Inc.
State License Number A-13

Water Quality
Sample taken? Yes
Where analyzed JTC Environmental Consultants, Inc.

Date well completed 3/23/87

WELL MAINTENANCE RECORD

Problem	Corrective Action Taken	Date	Specific Capacity (gpm/ft of drawdown)	
			Before	After

DEPARTMENT OF THE NAVY
SOUTHERN DIVISION
NAVAL FACILITIES ENGINEERING COMMAND
2155 EAGLE DR P O BOX 10068
CHARLESTON S C 29411-0068

WELL DATA REPORT

WELL NUMBER GPT - 1-2 AREA 1

DATE OF INSTALLATION 3/21/87

WELL HOLE DATA

Drill Date 3/21/87 Well Driller Southwestern Laboratories, Inc.

Depth of Boring 27.5 ft Purpose of Boring Soil Sampling and Monitoring Well Installation

Drilling Method Hollow-stem auger Mud Type None

WATER LEVEL DATA (All measurements from top of casing)

Water Level 5.0 Date of Measurement 3/22/87

DEVELOPMENT DATA

Development Method pumped

Length of Time Developed 40 minutes

LOCATION OF BOREHOLE INFORMATION

Drillers Log X Geophysical Log

Physical Core X Cutting Samples

Water Level Observations 4.17' on 3/30/87

DRILLED BY S.W. Labs SCCWD#

DEVELOPED BY HLA SCCWD#

TECHNICAL OVERSIGHT BY HLA

DEPARTMENT OF THE NAVY
SOUTHERN DIVISION
NAVAL FACILITIES ENGINEERING COMMAND
2155 EAGLE DR. P O BOX 10068
CHARLESTON S C 29411-0068

WELL CONSTRUCTION DETAILS

WELL NUMBER GPT - 1-2

DATE OF INSTALLATION 3/21/87

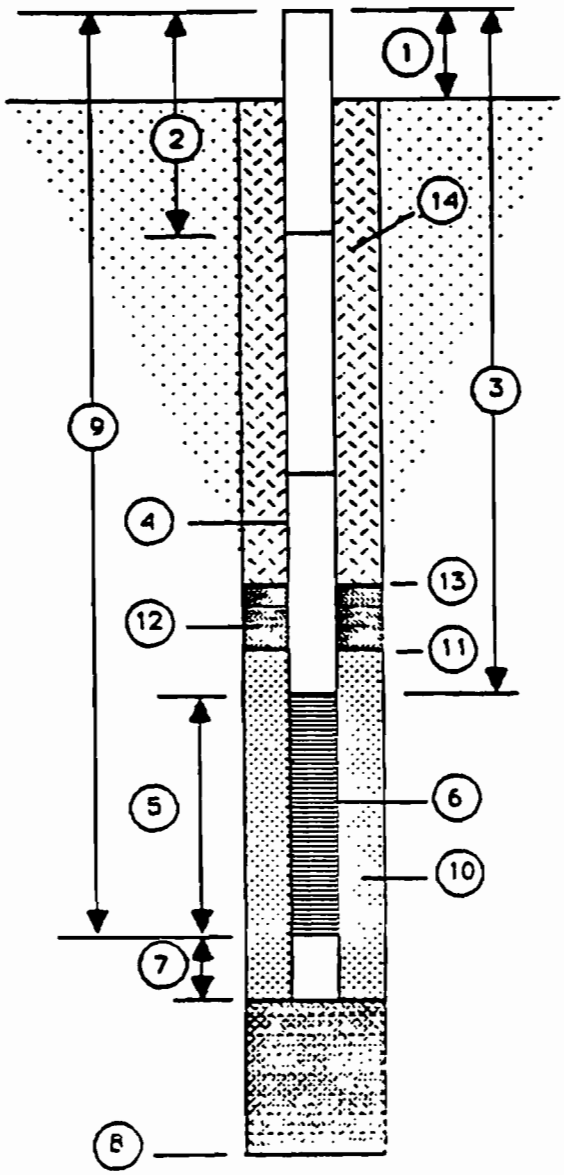

1. Height of Casing above ground 2.6 ft
2. Depth to first Coupling 5.6 ft

   Coupling Interval Depths 15.6 ft, 25.6 ft
3. Total Length of Blank Pipe 5.6 ft
4. Type of Blank Pipe Sch. 40 PVC
5. Length of Screen 24 ft
6. Type of Screen Sch. 40 PVC, .020 slotted
7. Length of Sump N/A
8. Total Depth of Boring 27.5 ft Hole Diameter 6 3/4 i
9. Depth To Bottom of Screen 29.6 ft
10. Type of Screen Filter #1 sand

    Quantity Used 500 lbs Size 10/20 U/C
11. Depth To Top of Filter 2 ft
12. Type of Seal 1/2 inch bentonite pellets

    Quantity Used 12 pounds
13. Depth To Top of Seal 1.0 ft
14. Type of Grout cement-bentonite

    Grout Mixture 20:1

    Method of Placement poured

COMMENTS ON INSTALLATION

WELL AND PUMP DATA

Location of Well GPT - 1-2

County	Township Number	Range Number	Section No.	Fraction	
Harrison	8 N or S	11 E or W	6	—	SW NW ¼ ¼ ¼

Property owner's name and address

NCBC Gulfport
Gulfport, Mississippi

Address and City or Distance and Direction from Road Intersections

Show exact location of well in section grid with an 'x'

N

S

1 mile

Sketch map of well location

Addition Name

Block Number

Lot Number

Well depth 27 ft

Datum point from which all measurements are taken Ground Surface

Method of Drilling
Cable tool, Direct rotary, Reverse rotary, Hollow rod, Air rotary, Jetted, Driven, Bucket auger, Flight auger, Dug, X ~~Hollow~~ stem auge

Use
Domestic, Irrigation, Test Well, Public supply, Municipal, Heating or cooling, Industrial, Commercial, X Monitoring

Casing Type
Steel, Galv, X PVC, SS, X Threaded, Welded, Solvent welded
Height above/below surface 2.6 ft
Drive shoe? Yes ___ No ___

2 in to 3 ft Wgt ___ lb/ft Sch No 40 — Hole diameter 6-3/4 to 27
___ in to ___ ft Wgt ___ lb/ft Sch No ___ — in to ___
___ in to ___ ft Wgt ___ lb/ft Sch No ___ — in to ___

Remarks, Elevation, Source of Data, etc.

N 258384.31 E 405230.90 (MS State Plane)
Elevation 29.40 ft (NGVD)

Borehole data

Formation Log	Color	Hardness	From	To
Sandy Lean Clay	Gray	stiff	0	4
Clayey Sand	Gray	med dense	4	5
Sand	Brown	med dns to dense	5	27
Sandy Fat Clay	Gray	soft	27	--

Intake Portion of Well
Screen type Schedule 40 or open hole from ___ ft to ___ ft
Manufacturer Triloc
Material PVC Dia 2 inches
Fittings threaded Length 24 ft
Set between 3 ft and 27 ft Slot .020
___ ft and ___ ft Slot ___
___ ft and ___ ft Slot ___
Method of installation ___

Filter Pack
Source Pearl River Plant I Gradation 10/20
Method of installation poured Composition silica
Volume used 5 sacks Depth to top of fp 2 ft

Grout
Used? X Yes No Volume used 2.5 gal
Neat Cement X Bentonite
Method of installation poured
Depth from 0 ft to 1 ft
from ___ ft to ___ ft

Development
Method pumped Duration 40 min
Dates 3/22/87 Sand content after 15 min 0
Chemicals used none

Static Water Level
24 ft X below above grade
Date measured

Pumping Water Level
N/A ft below above grade Date ___
After ___ hrs pumping at ___ gpm

Specific Capacity
___ gpm/ft of drawdown at ___ hours
Date ___

Pump
Date installed N/A Type ___
Manufacturer ___ Model No ___
H P ___ Volts ___ Capacity ___
Depth of pump intake setting ___ No of stages ___
Oil Water lubrication Power source ___
Material of drop pipe ___ bowls ___
shafting ___ impellers ___ Bowl dia ___
Column pipe dia ___ Length ___ Modifications ___

Well Head Completion
Pitless adaptor Basement offset Distance above grade 2.5 ft

Nearest Sources of Possible Contamination
___ ft Direction ___ Type ___
Well disinfected upon completion? Yes No

Geophysical Logs Run

No

Water Quality
Sample taken X Yes
Where analyzed JTC Environmental Consultants, Inc.

Name and Address

Name of Driller Southwestern Laboratories, Inc.
State License Number ___

Date well completed 3/22/87

WELL MAINTENANCE RECORD

Problem	Corrective Action Taken	Date	Specific Capacity (gpm/ft of drawdow	
			Before	After

DEPARTMENT OF THE NAVY
SOUTHERN DIVISION
NAVAL FACILITIES ENGINEERING COMMAND
2155 EAGLE DR P O BOX 10068
CHARLESTON S C 29411-0068

WELL DATA REPORT

WELL NUMBER GPT - 1-3 AREA 1

DATE OF INSTALLATION 3/21/87

WELL HOLE DATA

Drill Date 3/21/87 Well Driller Southwestern Laboratories, Inc.

Depth of Boring 28 ft Purpose of Boring Soil Sampling and Monitoring Well Installation

Drilling Method Hollow-stem auger Mud Type None

WATER LEVEL DATA (All measurements from top of casing)

Water Level 3.6 ft Date of Measurement 3/22/87

DEVELOPMENT DATA

Development Method Pumped

Length of Time Developed 40 minutes

LOCATION OF BOREHOLE INFORMATION

Drillers Log X Geophysical Log

Physical Core X Cutting Samples

Water Level Observations 3.32' on 3/30/87

DRILLED BY S.W. Labs SCCWD#

DEVELOPED BY HLA SCCWD#

TECHNICAL OVERSIGHT BY HLA

DEPARTMENT OF THE NAVY
SOUTHERN DIVISION
NAVAL FACILITIES ENGINEERING COMMAND
2155 EAGLE DR., P.O. BOX 10068
CHARLESTON S.C. 29411-0068

WELL CONSTRUCTION DETAILS

WELL NUMBER GPT - 1-3

DATE OF INSTALLATION 3/21/87

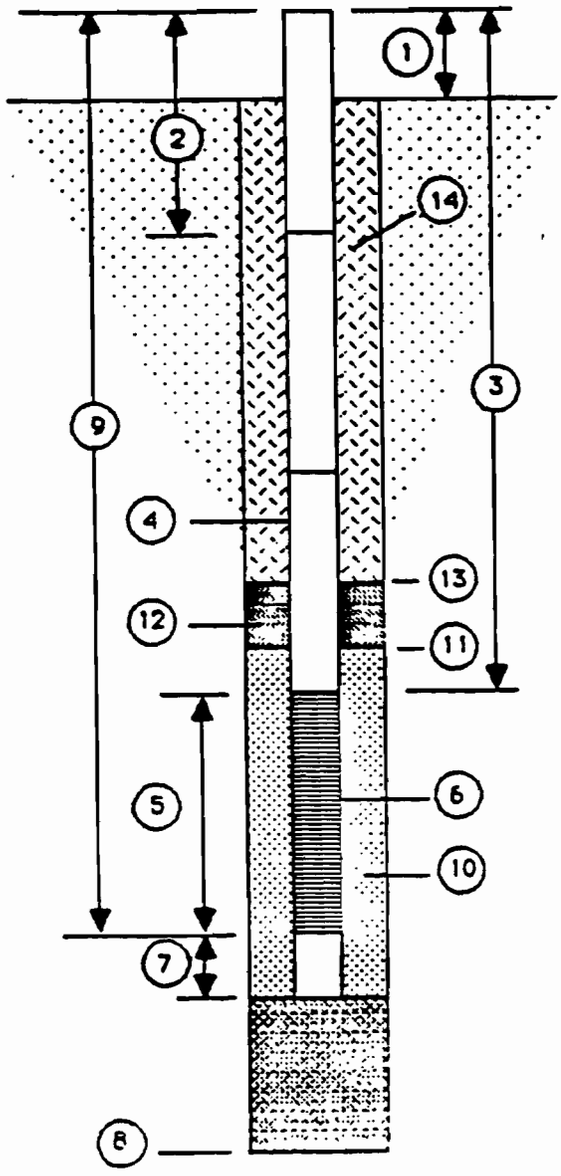

1. Height of Casing above ground 2.3 ft
2. Depth to first Coupling 5.3 ft

   Coupling Interval Depths 15.3 ft, 25.3 ft
3. Total Length of Blank Pipe 5.3 ft
4. Type of Blank Pipe Schedule 40 PVC
5. Length of Screen 23 ft
6. Type of Screen Schedule 40 PVC, .020 slotted
7. Length of Sump N/A
8. Total Depth of Boring 28 ft Hole Diameter 6-3/4 in
9. Depth To Bottom of Screen 28.3 ft
10. Type of Screen Filter #1 sand

    Quantity Used 550 lbs Size 10/20 U/C
11. Depth To Top of Filter 1.5 ft
12. Type of Seal 1/2 inch bentonite pellets

    Quantity Used 12 pounds
13. Depth To Top of Seal 0.5 ft
14. Type of Grout cement-bentonite

    Grout Mixture 20:1

    Method of Placement poured

COMMENTS ON INSTALLATION

WELL AND PUMP DATA

Location of Well GPT - 1-3

County	Township Number (N or S)	Range Number (E or W)	Section No.	Fraction	SW NW
Harrison	8 S	11 W	6	-	

dress and City or Distance and Direction from Road Intersections

Property owner's name and address

NCBC Gulfport

Gulfport, Mississippi

Show exact location of well in section grid with an 'x' — **Sketch map of well location**

N — S — 1 mile

Addition Name

Block Number

Lot Number

Remarks, Elevation, Source of Data, etc.

N 258910.22 E 40[illegible]25.66 (MS State Plane)

Elevation 27.28 ft (NGVD)

Borehole data

Formation Log	Color	Hardness	From	To
Topsoil	Brown	soft	0	0.1
Sand	Tan & Gry	dense	0.1	4
Sand	Tan	dense	4	5.4
Silty Sand	Dk Brown	dense	5.4	7.5
Sand	Tan	dense	7.5	26
dy Fat Clay	Gray	soft	26	--

Well depth 26 ft

Datum point from which all measurements are taken Ground Surface

Method of Drilling
Cable tool; Direct rotary; Reverse rotary; Hollow rod; Air rotary; Jetted; Driven; Bucket auger; Flight auger; Dug; x Hollow-stem auger

Use
Domestic; Irrigation; Test Well; Public supply; Municipal; Heating or cooling; Industrial; Commercial; X Monitoring

Casing Type
Steel; Galv; X PVC; SS; X Threaded; Welded; Solvent welded

Height above/below surface 2.3 ft; Drive shoe? Yes ___ No ___

2 in to 3 ft Wgt ___ lb/ft Sch No 40 — Hole diameter 6-3/4 in to 28 ft

___ in to ___ ft Wgt ___ lb/ft Sch No ___ — ___ in to ___ ft

___ in to ___ ft Wgt ___ lb/ft Sch No ___ — ___ in to ___ ft

Intake Portion of Well
Screen type Schedule 40 or open hole from ___ ft to ___ ft
Manufacturer Triloc
Material PVC Dia 2
Fittings Threaded Length 23 ft
Set between 3 ft and 25.3 ft Slot .020
___ ft and ___ ft Slot ___
___ ft and ___ ft Slot ___
Method of installation ___

Filter Pack
Source Pearl River Plant I Gradation 10/20
Method of installation poured Composition silica
Volume used 5.5 sacks Depth to top of fp 1.5 ft

Grout
Used? X Yes No Volume used 2.5 gal
Neat Cement; X Bentonite
Method of installation poured
Depth from 0 ft to 0.5 ft
from ___ ft to ___ ft

Development
Method pumped Duration 40 minutes
Dates 3/22/87 Sand content after 10 min 0
Chemicals used None

Static Water Level
___ ft X below above grade
Date measured 3/22/87

Pumping Water Level
N/A ft below above grade Date ___
After ___ hrs pumping at ___ gpm

Specific Capacity N/A
___ gpm/ft of drawdown at ___ hours
Date ___

Pump
Date installed N/A Type ___
Manufacturer ___ Model No ___
HP ___ Volts ___ Capacity ___
Depth of pump intake setting ___ No of stages ___
Oil Water lubrication Power source ___
Material of drop pipe ___ bowls ___
shafting ___ impellers ___ Bowl dia ___
Column pipe dia ___ Length ___ Modifications ___

Well Head Completion
Pitless adaptor Basement offset Distance above grade 2.5 ft

Nearest Sources of Possible Contamination
___ ft Direction ___ Type ___
Well disinfected upon completion? Yes No

Geophysical Logs Run

No

Water Quality
Sample taken? X Yes No
Where analyzed JTC Environmental Consultants, Inc

Contractor Name and Address

Name of Driller Southwestern Laboratories Inc.

State License Number ___

Date well completed 3/22/87

WELL MAINTENANCE RECORD

Problem	Corrective Action Taken	Date	Specific Capacity (gpm/ft of drawdown)	
			Before	After

DEPARTMENT OF THE NAVY
SOUTHERN DIVISION
NAVAL FACILITIES ENGINEERING COMMAND
2155 EAGLE DR P O BOX 10068
CHARLESTON S C 29411-0068

WELL DATA REPORT

WELL NUMBER GPT- 2-1 AREA 2

DATE OF INSTALLATION 3/19/87

WELL HOLE DATA

Drill Date 3/19/87 Well Driller Southwestern Laboratories, Inc.

Depth of Boring 30.5 ft Purpose of Boring Soil Sampling and Monitoring Well Installation

Drilling Method Hollow-stem auger Mud Type None

WATER LEVEL DATA (All measurements from top of casing)

Water Level 6.0 ft Date of Measurement 3/22/87

DEVELOPMENT DATA

Development Method Pumped

Length of Time Developed 1 hr.

LOCATION OF BOREHOLE INFORMATION

Drillers Log X Geophysical Log

Physical Core X Cutting Samples

Water Level Observations 5.32' on 3/30/87

DRILLED BY S.W. Labs SCCWD#

DEVELOPED BY HLA SCCWD#

TECHNICAL OVERSIGHT BY HLA

DEPARTMENT OF THE NAVY
SOUTHERN DIVISION
NAVAL FACILITIES ENGINEERING COMMAND
2155 EAGLE DR., P O BOX 10068
CHARLESTON S C 29411-0068

WELL CONSTRUCTION DETAILS

WELL NUMBER GPT - 2-1

DATE OF INSTALLATION 3/19/87

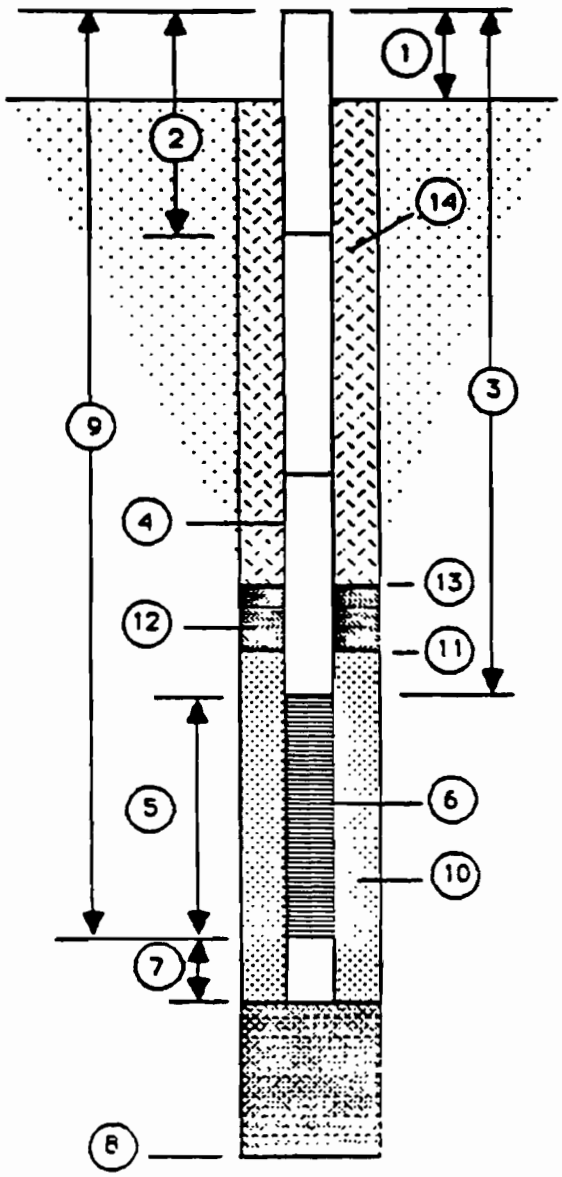

1. Height of Casing above ground 2.5 ft
2. Depth to first Coupling 5.5 ft

   Coupling Interval Depths 15.5 ft, 25.5 ft
3. Total Length of Blank Pipe 5.5 ft
4. Type of Blank Pipe Schedule 40 PVC
5. Length of Screen 27 ft
6. Type of Screen Schedule 40 PVC, .020 slotted
7. Length of Sump N/A
8. Total Depth of Boring 30.5 ft Hole Diameter 6-3/4 in
9. Depth To Bottom of Screen 32.5 ft
10. Type of Screen Filter #1 sand

    Quantity Used 600 lbs. Size 10/20 U/C
11. Depth To Top of Filter 2.3 ft
12. Type of Seal 1/2-inch bentonite pellets

    Quantity Used 12 lbs.
13. Depth To Top of Seal 1 ft
14. Type of Grout cement-bentonite

    Grout Mixture 20:1

    Method of Placement poured

COMMENTS ON INSTALLATION

WELL AND PUMP DATA

Location of Well GPT - 2-1

County	Township Number	Range Number	Section No.	Fraction
Harrison	8 N or S	11 E or W	6	NW ¼ NW ¼

Address and City or Distance and Direction from Road Intersections

Property owner's name and address

NCBC Gulfport
Gulfport, Mississippi

Show exact location of well in section grid with an 'x' — **Sketch map of well location**

N
S
1 mile

Addition Name

Block Number

Lot Number

Well depth 30 ft

Datum point from which all measurements are taken Ground Surface

Method of Drilling
Cable tool; Direct rotary; Reverse rotary; Hollow rod; Air rotary; Jetted; Driven; Bucket auger; Flight auger; Dug; x Hollow-stem auger

Use
Domestic; Irrigation; Test Well; Public supply; Municipal; Heating or cooling; Industrial; Commercial; x Monitoring

Casing Type
Steel; Galv; x PVC; SS; Threaded; Welded; Solvent welded
Height above/below surface 2.5 ft
Drive shoe? Yes ___ No ___
2 in to 3 ft Wgt ___ lb/ft Sch No 40
___ in to ___ ft Wgt ___ lb/ft Sch No ___
___ in to ___ ft Wgt ___ lb/ft Sch No ___
Hole diameter 6-3/4 in to 30 ft

Remarks, Elevation, Source of Data, etc.

N 259531.08 E 404631.47 (MS State Plane)

Elevation 25.23 ft (NGVD)

Borehole data

Formation Log	Color	Hardness	From	To
Topsoil	Brown	soft	0	.25
Silt	Tan	soft	.25	0.5
Silty Sand	Dk Gray to Dk Brown	med dense	0.5	4.7
Sand	Lt Brown	loose med dnse	4.7	30
Sandy Fat Clay	Gray	soft	30	--

Intake Portion of Well
Screen type Schedule 40 or open hole from ___ ft to ___ ft
Manufacturer Trilor
Material PVC Dia 2
Fittings threaded Length 77 ft
Set between 3 ft and 30 ft Slot .020
___ ft and ___ ft Slot ___
___ ft and ___ ft Slot ___
Method of installation ___

Filter Pack
Source Pearl River Plant I Gradation 10/20
Method of installation poured Composition silica
Volume used 6 sacks Depth to top of fp 2.3 ft

Grout
Used? x Yes ___ No Volume used 2.5 gal
___ Neat Cement x Bentonite ___
Method of installation poured
Depth from 0 ft to 1 ft
from ___ ft to ___ ft

Development
Method pumped Duration 1 hr.
Dates 3/22/87 Sand content after 0 min 0
Chemicals used none

Static Water Level
3.5 ft x below ___ above grade
Date measured 3/22/87

Pumping Water Level
N/A ft below ___ above grade Date ___
After ___ hrs pumping at ___ gpm

Specific Capacity N/A
___ gpm/ft of drawdown at ___ hours
Date ___

Pump
Date installed N/A Type ___
Manufacturer ___ Model No ___
HP ___ Volts ___ Capacity ___
Depth of pump intake setting ___ No of stages ___
___ Oil ___ Water lubrication Power source ___
Material of drop pipe ___ bowls ___
shafting ___ impellers ___ Bowl dia ___
Column pipe dia ___ Length ___ Modifications ___

Well Head Completion
Pitless adaptor Basement offset Distance above grade 2.5 ft

Nearest Sources of Possible Contamination
___ Direction ___ Type ___
Well disinfected upon completion? Yes No

Geophysical Logs Run

No

Contractor Name and Address

Name of Driller Southwestern Laboratories, Inc.
State License Number ___

Water Quality
Sample taken? x Yes ___
Where analyzed JTC Environmental Consultants, Inc.

Date well completed 3/22/87

WELL MAINTENANCE RECORD

Problem	Corrective Action Taken	Date	Specific Capacity (gpm/ft of drawdown)	
			Before	After

DEPARTMENT OF THE NAVY
SOUTHERN DIVISION
NAVAL FACILITIES ENGINEERING COMMAND
2155 EAGLE DR P O BOX 10068
CHARLESTON S C 29411-0068

WELL DATA REPORT

WELL NUMBER GPT - 2-2 AREA 2

DATE OF INSTALLATION 3/20/87

WELL HOLE DATA

Drill Date 3/20/87 Well Driller Southerwestern Laboratories, Inc.

Depth of Boring 20 ft Purpose of Boring Soil Sampling and Monitoring Well Installation

Drilling Method Hollow-stem auger Mud Type None

WATER LEVEL DATA (All measurements from top of casing)

Water Level 6.1 ft Date of Measurement 3/23/87

DEVELOPMENT DATA

Development Method Pumping

Length of Time Developed 40 minutes

LOCATION OF BOREHOLE INFORMATION

Drillers Log X Geophysical Log

Physical Core X Cutting Samples

Water Level Observations 5.01' on 3/30/87

DRILLED BY S.W. Labs SCCWD#

DEVELOPED BY HLA SCCWD#

TECHNICAL OVERSIGHT BY HLA

DEPARTMENT OF THE NAVY
SOUTHERN DIVISION
NAVAL FACILITIES ENGINEERING COMMAND
2155 EAGLE DR. P O BOX 10068
CHARLESTON S C 29411-0068

WELL CONSTRUCTION DETAILS

WELL NUMBER GPT - 2-2

DATE OF INSTALLATION 3/20/87

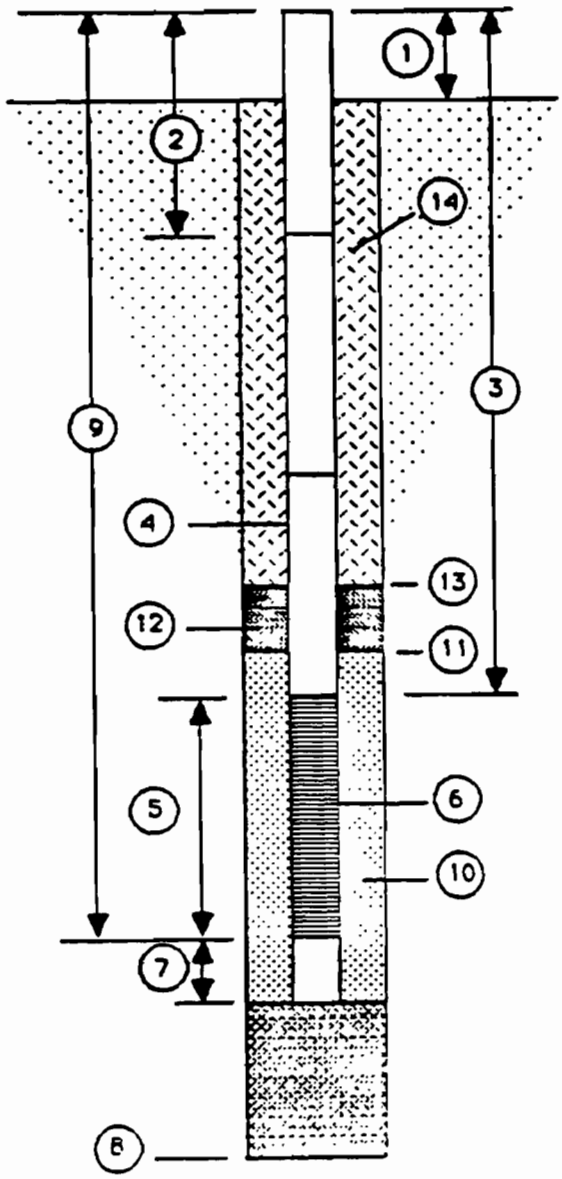

1. Height of Casing above ground 2.5 ft
2. Depth to first Coupling 5.5 ft

   Coupling Interval Depths 15.5 ft
3. Total Length of Blank Pipe 5.5 ft
4. Type of Blank Pipe Sch. 40 PVC
5. Length of Screen 15 ft
6. Type of Screen Sch. 40 PVC, .020 slotted
7. Length of Sump N/A
8. Total Depth of Boring 20 ft Hole Diameter 6-3/4 in
9. Depth To Bottom of Screen 20.5 ft
10. Type of Screen Filter #1 sand

    Quantity Used 500 lbs. Size 10/20 U/C
11. Depth To Top of Filter 2 ft
12. Type of Seal 1/2-inch bentonite pellets

    Quantity Used 12 pounds
13. Depth To Top of Seal 0.5 ft
14. Type of Grout cement-bentonite

    Grout Mixture 20:1

    Method of Placement poured

COMMENTS ON INSTALLATION

WELL AND PUMP DATA

Location of Well GPT - 2-2

County	Township Number	Range Number	Section No.	Fraction	
Harrison	8 N or (S)	11 E or (W)	6	—	NW NW ¼ ¼ ¼

Property owner's name and address

NCBC Gulfport
Gulfport, Mississippi

Street Address and City or Distance and Direction from Road Intersections

Location of well in section grid with an 'x' — **Sketch map of well location**

N — S — 1 mile

Addition Name

Block Number

Lot Number

Well depth 18 ft

Datum point from which all measurements are taken Ground Surface

Method of Drilling
[ ] Cable tool [ ] Hollow rod [ ] Driven [ ] Dug
[ ] Direct rotary [ ] Air rotary [ ] Bucket auger [x] Holl
[ ] Reverse rotary [ ] Jetted [ ] Flight auger stem auge

Use
[ ] Domestic [ ] Public supply [ ] Industrial [ ]
[ ] Irrigation [ ] Municipal [ ] Commercial
[ ] Test Well [ ] Heating or cooling [x] Monitoring

Casing Type
[ ] Steel [x] Threaded Height above/below surface 2.5 ft
[ ] Galv [ ] Welded
[x] PVC [ ] Solvent welded Drive shoe? Yes ___ No ___
[ ] SS

2 in to 3 ft Wgt ___ lb/ft Sch No 40 — Hole diameter 6-3/4 in to 20
___ in to ___ ft Wgt ___ lb/ft Sch No ___ — ___ in to ___
___ in to ___ ft Wgt ___ lb/ft Sch No ___ — ___ in to ___

Remarks, Elevation, Source of Data, etc.

N 259528.99 E 404969.63 (MS State Plane)

Elevation 25.32 ft (NGVD)

Borehole data

Formation Log	Color	Hardness	From	To
Silty Sand	Brown	med dense	0	2
Silty Sand	Gray	med dense	2	4
Sandy Silt	Gray	loose	4	6.6
Sand	Lt Gray	med dense	6.6	8.3
Silty Sand	Gray	dense to v. dense	8.3	12.7
Sand	Brn & Gray	v. dense	12.7	18
Fat Clay	Gray	soft	18	--
↳ Sandy Fat Clay				

Intake Portion of Well
Screen type Schedule 40 or open hole from ___ ft to ___
Manufacturer Triloc
Material PVC Dia ___
Fittings Threaded Length 15 ft
Set between 3 ft and 18 ft Slot .020
___ ft and ___ ft Slot ___
___ ft and ___ ft Slot ___
Method of installation ___

Filter Pack
Source Pearl River Plant I Gradation 10/20
Method of installation poured Composition silica
Volume used 5 sacks Depth to top of f.p. 2 ft

Grout
Used? [x] Yes [ ] No Volume used 2.5 gal
[ ] Neat Cement [x] Bentonite [ ]
Method of installation poured
Depth from 0 ft to 0.5 ft
from ___ ft to ___ ft

Development
Method pumped Duration 40 minutes
Dates 3/23/87 Sand content after 40 min 0
Chemicals used none

Static Water Level
3.6 ft [x] below [ ] above grade
Date measured 3/23/87

Pumping Water Level
N/A ft below above grade Date ___
After ___ hrs pumping at ___ gpm

Specific Capacity N/A gpm/ft of drawdown at ___ hours
Date ___

Pump N/A
Date installed ___ Type ___
Manufacturer ___ Model No ___
H.P. ___ Volts ___ Capacity ___
Depth of pump intake setting ___ No. of stages ___
[ ] Oil [ ] Water lubrication Power source ___
Material of drop pipe ___ bowls ___
shafting ___ impellers ___ Bowl dia ___
Column pipe dia ___ Length ___ Modifications ___

Well Head Completion
Pitless adaptor Basement offset Distance above grade 2.5 ft

Nearest Sources of Possible Contamination
___ ft Direction ___ Type ___
Well disinfected upon completion? Yes No

Geophysical Logs Run

No

Name and Address

Name of Driller Southwestern Laboratories, Inc.

State License Number ___

Water Quality
Sample taken [x] Yes No
Where analyzed JTC Environmental Consultants, Inc.

Date well completed 3/23/87

WELL MAINTENANCE RECORD

Problem	Corrective Action Taken	Date	Specific Cap (gpm/ft of dr	
			Before	Af

DEPARTMENT OF THE NAVY
SOUTHERN DIVISION
NAVAL FACILITIES ENGINEERING COMMAND
2155 EAGLE DR P O BOX 10068
CHARLESTON S C 29411-0068

WELL DATA REPORT

WELL NUMBER GPT - 2-3 AREA 2

DATE OF INSTALLATION 3/20/87

WELL HOLE DATA

Drill Date 3/20/87 Well Driller Southwestern Laboratories, Inc.

Depth of Boring 15 ft Purpose of Boring Soil Sampling and Monitoring Well Installation

Drilling Method Hollow-stem auger Mud Type None

WATER LEVEL DATA (All measurements from top of casing)

Water Level 4.4 Date of Measurement 3/23/87

DEVELOPMENT DATA

Development Method Pumped

Length of Time Developed 30 minutes

LOCATION OF BOREHOLE INFORMATION

Drillers Log X Geophysical Log

Physical Core x Cutting Samples

Water Level Observations 3.69' on 3/30/87

DRILLED BY S.W. Labs SCCWD#

DEVELOPED BY HLA SCCWD#

TECHNICAL OVERSIGHT BY HLA

DEPARTMENT OF THE NAVY
SOUTHERN DIVISION
NAVAL FACILITIES ENGINEERING COMMAND
2155 EAGLE DR. P.O BOX 10068
CHARLESTON S C 29411-0068

WELL CONSTRUCTION DETAILS

WELL NUMBER GPT - 2-3

DATE OF INSTALLATION 3/20/87

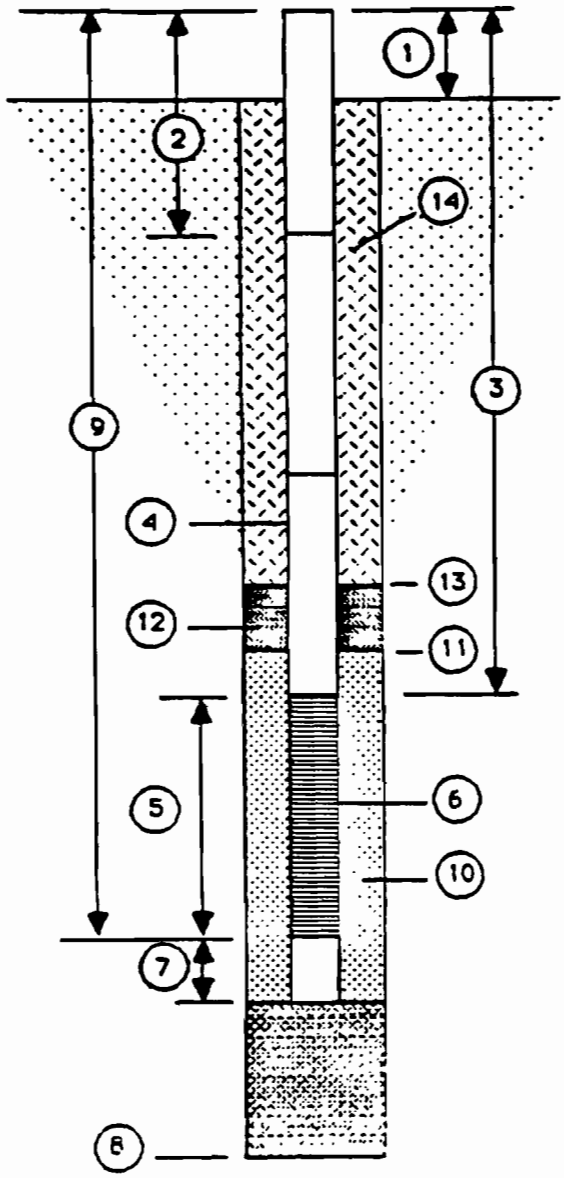

1. Height of Casing above ground 2.5 ft
2. Depth to first Coupling 5.5 ft
   Coupling Interval Depths N/A
3. Total Length of Blank Pipe 5.5 ft
4. Type of Blank Pipe Schedule 40 PVC
5. Length of Screen 10 ft
6. Type of Screen Schedule 40 PVC, .020 slotted
7. Length of Sump N/A
8. Total Depth of Boring 15.5 ft Hole Diameter 6-3/4 in
9. Depth To Bottom of Screen 13 ft
10. Type of Screen Filter #1 sand
    Quantity Used 250 lbs. Size 10/20 U/C
11. Depth To Top of Filter 2 ft
12. Type of Seal 1/2-inch bentonite pellets
    Quantity Used 12 pounds
13. Depth To Top of Seal 0.3 ft
14. Type of Grout cement-bentonite
    Grout Mixture 20:1
    Method of Placement poured

COMMENTS ON INSTALLATION

WELL AND PUMP DATA

Location of Well GPT - 2-3

County	Township Number	Range Number	Section No.	Fraction
Harrison	8 N or S	11 E or W	6	NW NW

Address and City or Distance and Direction from Road Intersections

Property owner's name and address

NCBC Gulfport
Gulfport, Mississippi

Show exact location of well in section grid with an 'x' — **Sketch map of well location**

N — S — 1 mile

Addition Name

Block Number

Lot Number

Remarks, Elevation, Source of Data, etc.

N 260754.23 E 404889.48 (MS State Plane)

Elevation 24.62 ft (NGVD)

Borehole data

Formation Log	Color	Hardness	From	To
Topsoil	Brown	soft	0	0.1
Silty Sand	Lt Gray & Tan	loose	.1	2.8
Silty Sand	Dk Gray	loose	2.8	4.3
Silty Sand	Tan	loose	4.3	8.2
Sand → Silty Sand	Gray	dense	8.2	10.1
Silty Sand	Dk Brown	dense	10.1	13
Sandy Fat Clay	Gray	soft	13	--

Well depth 13 ft — **Datum point from which all measurements are taken** Ground Surface

Method of Drilling
Cable tool; Direct rotary; Reverse rotary; Hollow rod; Air rotary; Jetted; Driven; Bucket auger; Flight auger; Dug; x Hollow-stem auger

Use
Domestic; Irrigation; Test Well; Public supply; Municipal; Heating or cooling; Industrial; Commercial; x Monitoring

Casing Type
Steel; Galv; x PVC; SS; x Threaded; Welded; Solvent welded; Height above/below surface 2.5 ft; Drive shoe? Yes ___ No ___

2 in to 3 ft Wgt ___ lb/ft Sch No 40
___ in to ___ ft Wgt ___ lb/ft Sch No ___
___ in to ___ ft Wgt ___ lb/ft Sch No ___

Hole diameter: 6-3/4 in to 15 ft; ___ in to ___ ft; ___ in to ___ ft

Intake Portion of Well
Screen type Schedule 40 or open hole from ___ ft to ___ ft
Manufacturer Triloc
Material PVC Dia 2
Fittings Threaded Length 10 ft
Set between 3 ft and 10 ft Slot .020
___ ft and ___ ft Slot ___
___ ft and ___ ft Slot ___
Method of installation ___

Filter Pack
Source Pearl River Plant I Gradation 10/20
Method of installation poured Composition silica
Volume used 2.5 sacks Depth to top of fp 2

Grout
Used? x Yes ___ No Volume used 2.5 gal
___ Neat Cement x Bentonite ___
Method of installation poured
Depth from 0 ft to 0.3 ft
from ___ ft to ___ ft

Development
Method Pumped Duration 30 minutes
Dates 3/23/87 Sand content after 5 min 0
Chemicals used None

Static Water Level
1.9 ft x below ___ above grade
Date measured 3/23/87

Pumping Water Level
N/A ft below ___ above grade Date ___
After ___ hrs pumping at ___ gpm

Specific Capacity N/A
___ gpm/ft of drawdown at ___ hours
Date ___

Pump
Date installed N/A Type ___
Manufacturer ___ Model No ___
HP ___ Volts ___ Capacity ___
Depth of pump intake setting ___ No of stages ___
___ Oil ___ Water lubrication Power source ___
Material of drop pipe ___ bowls ___
shafting ___ impellers ___ Bowl dia ___
Column pipe dia ___ Length ___ Modifications ___

Well Head Completion
Pitless adaptor Basement offset Distance above grade 2.5 ft

Nearest Sources of Possible Contamination
___ ft Direction ___ Type ___
Well disinfected upon completion? Yes No

Geophysical Logs Run

No

Contractor Name and Address

Name of Driller Southwestern Laboratories, Inc.
State License Number ___

Water Quality
Sample taken? x Yes No
Where analyzed JTC Environmental Consultants, Inc.

Date well completed 3/23/87

WELL MAINTENANCE RECORD

Problem	Corrective Action Taken	Date	Specific Capacity (gpm/ft of drawdown)	
			Before	After

DEPARTMENT OF THE NAVY
SOUTHERN DIVISION
NAVAL FACILITIES ENGINEERING COMMAND
2155 EAGLE DR P O BOX 10068
CHARLESTON S C 29411-0068

WELL DATA REPORT

WELL NUMBER GPT - 3-1 AREA 3

DATE OF INSTALLATION 3/13/87

WELL HOLE DATA

Drill Date 3/13/87 Well Driller Southwestern Laboratories

Depth of Boring 29 ft Purpose of Boring Soil Sampling and Monitoring Well Installation

Drilling Method Hollow-stem auger Mud Type None

WATER LEVEL DATA (All measurements from top of casing)

Water Level 5 ft Date of Measurement 3/23/87

DEVELOPMENT DATA

Development Method Pumped

Length of Time Developed 30 minutes

LOCATION OF BOREHOLE INFORMATION

Drillers Log X Geophysical Log

Physical Core X Cutting Samples

Water Level Observations 4.41' on 3/30/87

DRILLED BY S.W. Labs SCCWD#

DEVELOPED BY HLA SCCWD#

TECHNICAL OVERSIGHT BY HLA

DEPARTMENT OF THE NAVY
SOUTHERN DIVISION
NAVAL FACILITIES ENGINEERING COMMAND
2155 EAGLE DR., P.O. BOX 10068
CHARLESTON S.C. 29411-0068

WELL CONSTRUCTION DETAILS

WELL NUMBER GPT - 3-1

DATE OF INSTALLATION 3/13/87

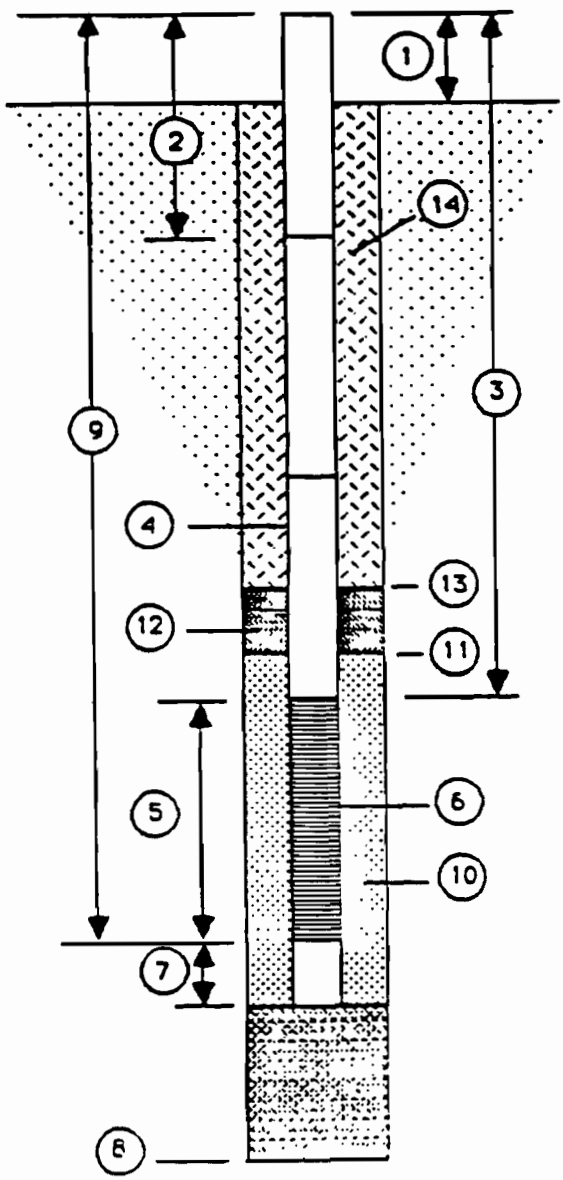

1. Height of Casing above ground 2.5 ft
2. Depth to first Coupling 5.0 ft
   Coupling Interval Depths 15.0 ft, 25.0 ft
3. Total Length of Blank Pipe 5 ft
4. Type of Blank Pipe Sch. 40 PVC
5. Length of Screen 26 ft
6. Type of Screen Sch. 40 PVC, .020 slotted
7. Length of Sump N/A
8. Total Depth of Boring 29 ft Hole Diameter 6-3/4 in
9. Depth To Bottom of Screen 31.0 ft
10. Type of Screen Filter #1 sand
    Quantity Used 650 lbs. Size 10/20 U/C
11. Depth To Top of Filter 1.5 ft
12. Type of Seal 1/2-inch bentonite pellets
    Quantity Used 20 lbs.
13. Depth To Top of Seal 0.2 ft
14. Type of Grout cement-bentonite
    Grout Mixture 20:1
    Method of Placement poured

COMMENTS ON INSTALLATION

WELL AND PUMP DATA

Location of Well GPT - 3-1

County	Township Number	Range Number	Section No.	Fraction
Harrison	8 N or S	12 E or W	1	SE NE

Address and City or Distance and Direction from Road Intersections

Property owner's name and address

NCBC Gulfport
Gulfport, Mississippi

Show exact location of well in section grid with an 'x' — **Sketch map of well location**

N
S
1 mile

Addition Name
Block Number
Lot Number

Remarks, Elevation, Source of Data, etc.

N 259462.41 E 403598.32 (MS State Plane)

Elevation 25.63 ft (NGVD)

Borehole data

Formation Log	Color	Hardness	From	To
Sandy Lean Clay	Brown	med sft	0	6.4
Silty Sand	Gray	--	6.4	6.9
Sand	Gray	--	6.9	15.4
Sandy Fat Clay	Blue Gray	med stf	15.4	19.4
Fat Clay	Blue Gray	med stf	19.4	25.8
Sandy Fat Clay	Blue Gray	med stf	25.8	--

Well depth 28.5 ft

Datum point from which all measurements are taken Ground Surface

Method of Drilling
☐ Cable tool ☐ Hollow rod ☐ Driven ☐ Dug
☐ Direct rotary ☐ Air rotary ☐ Bucket auger ☒ Hollow-stem auger
☐ Reverse rotary ☐ Jetted ☐ Flight auger

Use
☐ Domestic ☐ Public supply ☐ Industrial ☐ _____
☐ Irrigation ☐ Municipal ☐ Commercial
☐ Test Well ☐ Heating or cooling ☒ Monitoring

Casing Type
☐ Steel ☒ Threaded
☐ Galv ☐ Welded
☒ PVC ☐ Solvent welded
☐ SS

Height above/below surface 2.5 ft
Drive shoe? Yes ___ No ___

2 in to 2.5 ft Wgt ___ lb/ft Sch No 40
___ in to ___ ft Wgt ___ lb/ft Sch No ___
___ in to ___ ft Wgt ___ lb/ft Sch No ___

Hole diameter 6-3/4 to 29 ft
___ in to ___ ft
___ in to ___ ft

Intake Portion of Well
Screen type Schedule 40 or open hole from ___ ft to ___ ft
Manufacturer Triloc
Material PVC Dia 2"
Fittings Threaded Length 26 ft
Set between 8.5 ft and 28.5 ft Slot .020
___ ft and ___ ft Slot ___
___ ft and ___ ft Slot ___
Method of installation ___

Filter Pack
Source Pearl River Plant I Gradation 10/20
Method of installation poured Composition silica
Volume used 6.5 sacks Depth to top of fp 1.5

Grout
Used? ☒ Yes ☐ No Volume used 2.5 gal
☐ Neat Cement ☒ Bentonite
Method of installation poured
Depth from 0 ft to 0.2 ft
from ___ ft to ___ ft

Development
Method pumped Duration 30 minutes
Dates 3/23/87 Sand content after 20 min 0
Chemicals used none

Static Water Level
2.5 ft ☒ below ☐ above grade
Date measured 3/23/87

Pumping Water Level
N/A ft. below ___ above grade Date ___
After ___ hrs pumping at ___ gpm

Specific Capacity N/A
___ gpm/ft of drawdown at ___ hours
Date ___

Pump
Date installed N/A Type ___
Manufacturer ___ Model No ___
H P ___ Volts ___ Capacity ___
Depth of pump intake setting ___ No of stages ___
☐ Oil ☐ Water lubrication Power source ___
Material of drop pipe ___ bowls ___
shafting ___ impellers ___ Bowl dia ___
Column pipe dia ___ Length ___ Modifications ___

Well Head Completion
Pitless adaptor Basement offset Distance above grade 2.5 ft

Nearest Sources of Possible Contamination
___ ft Direction ___ Type ___
Well disinfected upon completion? Yes No

Geophysical Logs Run

No

Contractor Name and Address

Name of Driller Southwestern Laboratories
State License Number ___

Water Quality
Sample taken? ☒ Yes ☐ No
Where analyzed ITC Environmental Consultants, Inc.

Date well completed 3/23/87

WELL MAINTENANCE RECORD

Problem	Corrective Action Taken	Date	Specific Capacity (gpm/ft of drawdown)	
			Before	After

DEPARTMENT OF THE NAVY
SOUTHERN DIVISION
NAVAL FACILITIES ENGINEERING COMMAND
2155 EAGLE DR P O BOX 10068
CHARLESTON S C 29411-0068

WELL DATA REPORT

WELL NUMBER GPT - 3-2 AREA 3

DATE OF INSTALLATION 3/13/87

WELL HOLE DATA

Drill Date 3/13/87 Well Driller Southwestern Laboratories, Inc.

Depth of Boring 29 ft Purpose of Boring Soil Sampling and Monitoring Well Installation

Drilling Method Hollow-stem auger Mud Type None

WATER LEVEL DATA (All measurements from top of casing)

Water Level 7.1 ft Date of Measurement 3/17/87

DEVELOPMENT DATA

Development Method Pumped

Length of Time Developed 30 minutes

LOCATION OF BOREHOLE INFORMATION

Drillers Log X Geophysical Log

Physical Core X Cutting Samples

Water Level Observations 6.79' on 3/30/87

DRILLED BY S.W. Labs SCCWD#

DEVELOPED BY S.W. Labs SCCWD#

TECHNICAL OVERSIGHT BY HLA

DEPARTMENT OF THE NAVY
SOUTHERN DIVISION
NAVAL FACILITIES ENGINEERING COMMAND
2155 EAGLE DR., P.O BOX 10068
CHARLESTON S C 29411-0068

WELL CONSTRUCTION DETAILS

WELL NUMBER GPT - 3-2

DATE OF INSTALLATION 3/13/87

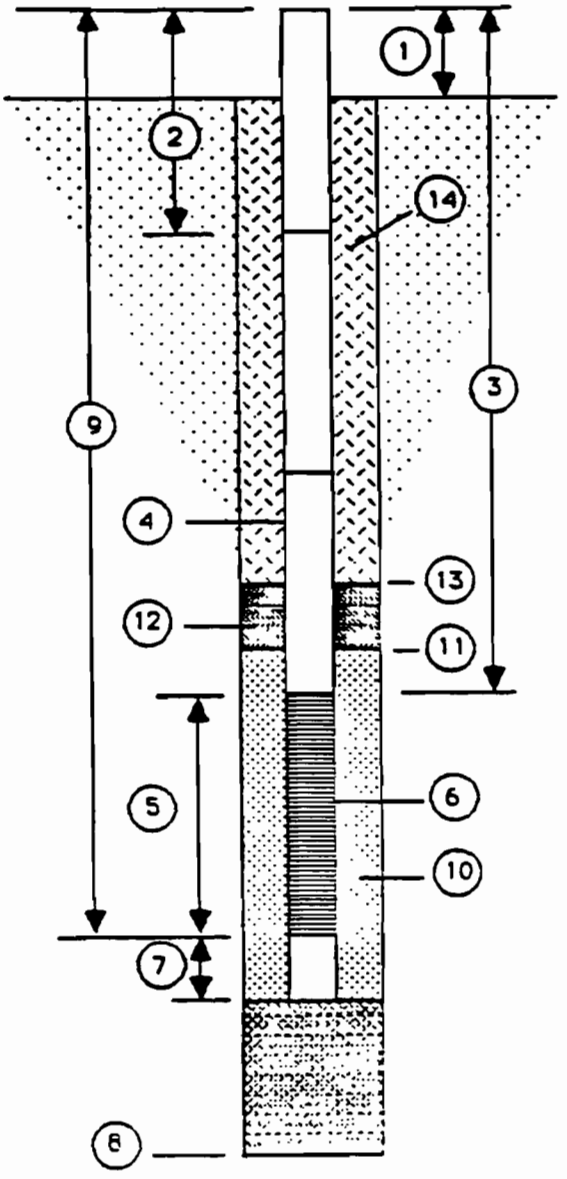

1. Height of Casing above ground 2.4 ft
2. Depth to first Coupling 5.4 ft

   Coupling Interval Depths 15.4 ft, 25.4 ft
3. Total Length of Blank Pipe 5.4 ft
4. Type of Blank Pipe Sch. 40 PVC
5. Length of Screen 26 ft
6. Type of Screen Sch. 40 PVC, .020 slotted
7. Length of Sump N/A
8. Total Depth of Boring 29 ft Hole Diameter 6-3/4 in
9. Depth To Bottom of Screen 31.4 ft
10. Type of Screen Filter #1 sand

    Quantity Used 600 lb Size 10/20 U/C
11. Depth To Top of Filter 2 ft
12. Type of Seal 1/2-inch bentonite pellets

    Quantity Used 25 lbs.
13. Depth To Top of Seal 0.5 ft
14. Type of Grout cement-bentonite

    Grout Mixture 20:1

    Method of Placement poured

COMMENTS ON INSTALLATION

WELL AND PUMP DATA

Location of Well GPT - 3-2

County	Township Number	Range Number	Section No.	Fraction	
Harrison	8 N or S	12 E or W	1	—	SE NE ¼ ¼ ¼

Address and City or Distance and Direction from Road Intersections

Property owner's name and address

NCBC Gulfport
Gulfport, Mississippi

Show exact location of well in section grid with an 'x' — **Sketch map of well location**

N — S — 1 mile

Addition Name

Block Number

Lot Number

Remarks, Elevation, Source of Data, etc.

N 259450.46 E 404024.98 (MS State Plane)

Elevation 25.43 ft (NGVD)

Borehole data

Formation Log	Color	Hardness	From	To
Silty Sand	Gray	--	0	9.5
Sand	Lt Gray	--	9.5	27.5
Fat Clay	Blue Gray	md stff	27.5	--

Well depth 29 ft

Datum point from which all measurements are taken Ground Surface

Method of Drilling
Cable tool; Hollow rod; Driven; Dug
Direct rotary; Air rotary; Bucket auger; x Hollow-stem auger
Reverse rotary; Jetting; Flight auger

Use
Domestic; Public supply; Industrial; ____
Irrigation; Municipal; Commercial
Test Well; Heating or cooling; x Monitoring

Casing Type
Steel; x Threaded; Height above/below surface 2.4 ft
Galv; Welded; Drive shoe? Yes ___ No x
x PVC; Solvent welded
SS

2 in to 3 ft Wgt ___ lb/ft Sch No 40 — Hole diameter 6-3/4 in to 29 ft
___ in to ___ ft Wgt ___ lb/ft Sch No ___ — ___ in to ___ ft
___ in to ___ ft Wgt ___ lb/ft Sch No ___ — ___ in to ___ ft

Intake Portion of Well
Screen type Schedule 40 or open hole from ___ ft to ___ ft
Manufacturer Lrloc
Material PVC Dia 2 inch
Fittings Threaded Length 10 ft.
Set between 3 ft and 29 ft Slot .020
___ ft and ___ ft Slot ___
___ ft and ___ ft Slot ___
Method of installation ___

Filter Pack
Source Pearl River Plant I Gradation 10/20
Method of installation poured Composition silica
Volume used 6 sacks Depth to top of fp 2 ft

Grout
Used? x Yes ___ No Volume used 2.5 gal
___ Neat Cement x Bentonite ___
Method of installation poured
Depth from 0 ft to 0.5 ft
from ___ ft to ___ ft

Development
Method pumped Duration 30 minutes
Dates 3/17/87 Sand content after 10 min. 0
Chemicals used none

Static Water Level
4.7 ft x below ___ above grade
Date measured 3/17/87

Pumping Water Level
N/A ft below ___ above grade Date ___
After N/A hrs pumping at ___ gpm

Specific Capacity N/A gpm/ft of drawdown at ___ hours
Date ___

Pump N/A
Date installed ___ Type ___
Manufacturer ___ Model No ___
H P ___ Volts ___ Capacity ___
Depth of pump intake setting ___ No of stages ___
___ Oil ___ Water lubrication Power source ___
Material of drop pipe ___ bowls ___
shafting ___ impellers ___ Bowl dia ___
Column pipe dia ___ Length ___ Modifications ___

Well Head Completion
Pitless adaptor Basement offset Distance above grade 2.4 ft

Nearest Sources of Possible Contamination
___ ft Direction ___ Type ___
Well disinfected upon completion? Yes No

Geophysical Logs Run

No

Contractor Name and Address

Name of Driller Southwestern Laboratories, Inc.

State License Number ___

Water Quality
Sample taken? x Yes No
Where analyzed ITC Environmental Consultants, Inc.

Date well completed 3/17/87

WELL MAINTENANCE RECORD

Problem	Corrective Action Taken	Date	Specific Capacity (gpm/ft of drawdown)	
			Before	After

DEPARTMENT OF THE NAVY
SOUTHERN DIVISION
NAVAL FACILITIES ENGINEERING COMMAND
2155 EAGLE DR P O BOX 10068
CHARLESTON S C 29411-0068

WELL DATA REPORT

WELL NUMBER GPT - 3-3 AREA 3

DATE OF INSTALLATION 3/14/87

WELL HOLE DATA

Drill Date 3/14/87 Well Driller Southwestern Laboratories

Depth of Boring 26 ft Purpose of Boring Soil Sampling and Monitoring Well Installation

Drilling Method Hollow-stem auger Mud Type None

WATER LEVEL DATA (All measurements from top of casing)

Water Level 7.3 ft. Date of Measurement 3/17/87

DEVELOPMENT DATA

Development Method Pumping

Length of Time Developed 17 minutes

LOCATION OF BOREHOLE INFORMATION

Drillers Log X Geophysical Log

Physical Core X Cutting Samples

Water Level Observations 6.81' on 3/30/87

DRILLED BY S.W. Labs SCCWD#

DEVELOPED BY S.W. Labs SCCWD#

TECHNICAL OVERSIGHT BY HLA

DEPARTMENT OF THE NAVY
SOUTHERN DIVISION
NAVAL FACILITIES ENGINEERING COMMAND
2155 EAGLE DR. P O BOX 10068
CHARLESTON S C 29411-0068

WELL CONSTRUCTION DETAILS

WELL NUMBER GPT - 3-3

DATE OF INSTALLATION 3/14/87

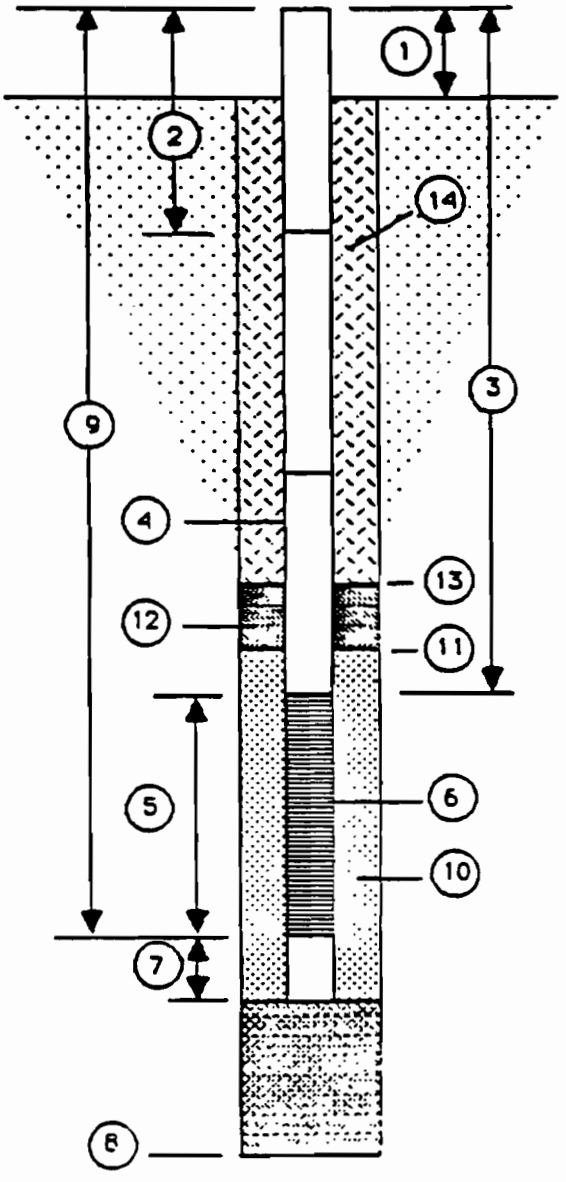

1. Height of Casing above ground 2.5 ft
2. Depth to first Coupling 5.3 ft

   Coupling Interval Depths 15.3 ft, 25.3 ft
3. Total Length of Blank Pipe 5.3 ft
4. Type of Blank Pipe Sch. 40 PVC
5. Length of Screen 23 ft
6. Type of Screen Sch. 40 PVC 0.020 slotted
7. Length of Sump N/A
8. Total Depth of Boring 26 ft Hole Diameter 6-3/4 in
9. Depth To Bottom of Screen 28.3 ft
10. Type of Screen Filter #1 sand

    Quantity Used 400 lbs Size 10/20 U/C
11. Depth To Top of Filter 1.5 ft
12. Type of Seal 1/2-inch bentonite pellets

    Quantity Used 20 lbs
13. Depth To Top of Seal 0.4 ft
14. Type of Grout cement-bentonite

    Grout Mixture 20:1

    Method of Placement poured

COMMENTS ON INSTALLATION

WELL AND PUMP DATA

Location of Well GPT - 3-3

County	Township Number	Range Number	Section No.	Fraction
Harrison	8 N or S	12 E or W	1	NE NE

Address and City or Distance and Direction from Road Intersections

Property owner's name and address

NCBC Gulfport
Gulfport, Mississippi

Show exact location of well in section grid with an 'x' — **Sketch map of well location**

N — S — 1 mile

Addition Name

Block Number

Lot Number

Well depth 25.8 ft

Datum point from which all measurements are taken Ground Surface

Method of Drilling
☐ Cable tool ☐ Hollow rod ☐ Driven ☐ Dug
☐ Direct rotary ☐ Air rotary ☐ Bucket auger ☒ Hollow stem auger
☐ Reverse rotary ☐ Jetted ☐ Flight auger

Use
☐ Domestic ☐ Public supply ☐ Industrial ☐ ____
☐ Irrigation ☐ Municipal ☐ Commercial
☐ Test Well ☐ Heating or cooling ☒ Monitoring

Remarks, Elevation, Source of Data, etc.

N 259681.55 E 404204.99 (MS State Plane)

Elevation 25.01 ft (NGVD)

Casing Type
☐ Steel ☒ Threaded
☐ Galv ☐ Welded
☒ PVC ☐ Solvent welded
☐ SS

Height above ~~grade~~ surface 2.5 ft
Drive shoe? Yes ___ No ___

2 in to 28 ft Wgt ___ lb/ft Sch No 40
___ in to ___ ft Wgt ___ lb/ft Sch No ___
___ in to ___ ft Wgt ___ lb/ft Sch No ___

Hole diameter 6-3/4 in to 26 ft; ___ in to ___ ft; ___ in to ___ ft

Borehole data

Formation Log	Color	Hardness	From	To
Silty Sand	Brown	--	0	4
Sand	Lt Brown & Lt Gray	--	4	26
Fat Clay	Blue Gray	soft	26	--

Intake Portion of Well
Screen type Schedule 40 or open hole from ___ ft to ___ ft
Manufacturer Triloc
Material PVC Dia 2"
Fittings Threaded Length 23 ft
Set between 2.8 ft and 25.8 ft Slot .020
___ ft and ___ ft Slot ___
___ ft and ___ ft Slot ___
Method of installation ___

Filter Pack
Source Pearl River Plant I Gradation 10/20
Method of installation poured Composition silica
Volume used 4 sacks Depth to top of fp 1.5 ft

Grout
Used? ☒ Yes ☐ No Volume used 2.5 gal
☐ Neat Cement ☒ Bentonite ☐ ___
Method of installation ___
Depth from 0 ft to 0.4 ft
from ___ ft to ___ ft

Development
Method pumping Duration 17 min
Dates 3/17/87 Sand content after 10 min 0
Chemicals used none

Static Water Level
4.8 ft ☒ below ☐ above grade
Date measured 3/17/87

Pumping Water Level
N/A ft ☐ below ☐ above grade Date ___
After ___ hrs pumping at ___ gpm

Specific Capacity N/A
___ gpm/ft of drawdown at ___ hours
Date ___

Pump
Date installed N/A Type ___
Manufacturer ___ Model No ___
H P ___ Volts ___ Capacity ___
Depth of pump intake setting ___ No of stages ___
☐ Oil ☐ Water lubrication Power source ___
Material of drop pipe ___ bowls ___
shafting ___ impellers ___ Bowl dia ___
Column pipe dia ___ Length ___ Modifications ___

Well Head Completion
☐ Pitless adaptor ☐ Basement offset Distance above grade 2.5 ft

Nearest Sources of Possible Contamination
___ ft Direction ___ Type ___
Well disinfected upon completion? ☐ Yes ☐ No

Geophysical Logs Run

No

Water Quality
Sample taken ☒ Yes ☐ No
Where analyzed JTC Environmental Consultants, Inc.

Driller Name and Address

Name of Driller Southwestern Laboratories
State License Number ___

3/17/87
Date well completed ___

WELL MAINTENANCE RECORD

Problem	Corrective Action Taken	Date	Specific Capacity (gpm/ft of drawdown)	
			Before	After

DEPARTMENT OF THE NAVY
SOUTHERN DIVISION
NAVAL FACILITIES ENGINEERING COMMAND
2155 EAGLE DR P O BOX 10068
CHARLESTON, S C 29411-0068

WELL DATA REPORT

WELL NUMBER GPT - 4-1 AREA 4

DATE OF INSTALLATION 3/18/87

WELL HOLE DATA

Drill Date 3/18/87 Well Driller Southwestern Laboratories, Inc.

Depth of Boring 19 ft Purpose of Boring Soil Sampling and Monitoring Well Installation

Drilling Method Hollow-stem auger Mud Type None

WATER LEVEL DATA (All measurements from top of casing)

Water Level 2.6 ft Date of Measurement 3/24/87

DEVELOPMENT DATA

Development Method Pumped

Length of Time Developed 40 minutes

LOCATION OF BOREHOLE INFORMATION

Drillers Log X Geophysical Log

Physical Core X Cutting Samples

Water Level Observations 2.66 on 3/30/87

DRILLED BY S.W. Labs SCCWD#

DEVELOPED BY HLA SCCWD#

TECHNICAL OVERSIGHT BY HLA

DEPARTMENT OF THE NAVY
SOUTHERN DIVISION
NAVAL FACILITIES ENGINEERING COMMAND
2155 EAGLE DR., P O BOX 10068
CHARLESTON S C 29411-0068

WELL CONSTRUCTION DETAILS

WELL NUMBER GPT - 4-1

DATE OF INSTALLATION 3/18/87

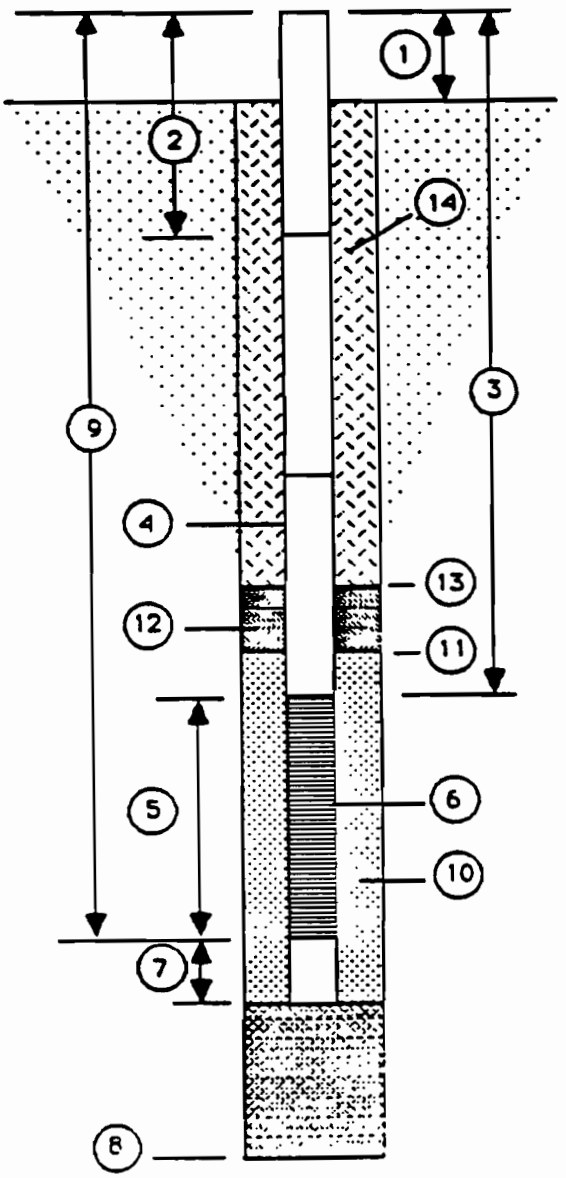

1. Height of Casing above ground 2.5 ft
2. Depth to first Coupling 5.5 ft

   Coupling Interval Depths 15.5 ft
3. Total Length of Blank Pipe 5.5 ft
4. Type of Blank Pipe Schedule 40 PVC
5. Length of Screen 16 ft
6. Type of Screen Schedule 40 PVC, .020 slotted
7. Length of Sump N/A
8. Total Depth of Boring 19 ft Hole Diameter 6-3/4 in
9. Depth To Bottom of Screen 21.5 ft
10. Type of Screen Filter #1 sand

    Quantity Used 400 lbs Size 10/20 U/C
11. Depth To Top of Filter 2.5 ft
12. Type of Seal 1/2-inch bentonite pellets

    Quantity Used 12 pounds
13. Depth To Top of Seal 0.5 ft
14. Type of Grout cement-bentonite

    Grout Mixture 20:1

    Method of Placement poured

COMMENTS ON INSTALLATION

WELL AND PUMP DATA

Location of Well GPT - 4-1

County	Township Number	Range Number	Section No.	Fraction	
Harrison	8 N or S	12 E or W	1	—	SE NE ¼ ¼ ¼

Property owner's name and address

NCBC Gulfport
Gulfport, Mississippi

Address and City or Distance and Direction from Road Intersections

Show exact location of well in section grid with an 'x' **Sketch map of well location**

N
S
1 mile

Addition Name

Block Number

Lot Number

Remarks, Elevation, Source of Data, etc.

N 258263.03 E 403412.44 (MS State Plane)

Elevation 24.83 ft (NGVD)

Borehole data

Formation Log	Color	Hardness	From	To
Gravel	--	--	0	.25
Sand	Tan	loose	.25	1.7
Silty Sand	Brown & Dk Gray	loose	1.7	4
Sand	Lt Gray	dense	4	19
Sandy Clay	Gray		19	--

Well depth 19 ft

Datum point from which all measurements are taken Ground Surface

Method of Drilling
☐ Cable tool ☐ Hollow rod ☐ Driven ☐ Dug
☐ Direct rotary ☐ Air rotary ☐ Bucket auger ☒ Hollow stem auger
☐ Reverse rotary ☐ Jetted ☐ Flight auger

Use
☐ Domestic ☐ Public supply ☐ Industrial ☐ ____
☐ Irrigation ☐ Municipal ☐ Commercial
☐ Test Well ☐ Heating or cooling ☒ Monitoring

Casing Type
☐ Steel ☒ Threaded Height above surface 2.5 ft
☐ Galv ☐ Welded Drive shoe? Yes ___ No ___
☒ PVC ☐ Solvent welded
☐ SS

2.5 in to 3 ft Wgt ___ lb/ft Sch No 40 — Hole diameter 6-3/4 in to 19 ft
___ in to ___ ft Wgt ___ lb/ft Sch No ___ — ___ in to ___ ft
___ in to ___ ft Wgt ___ lb/ft Sch No ___ — ___ in to ___ ft

Intake Portion of Well
Screen type Schedule 40 or open hole from ___ ft to ___ ft
Manufacturer Triloc
Material PVC Dia 2"
Fittings Threaded Length 16 ft
Set between 3 ft and 19 ft Slot ___
___ ft and ___ ft Slot ___
___ ft and ___ ft Slot ___
Method of installation ___

Filter Pack
Source Pearl River Plant I Gradation 10/20
Method of installation poured Composition silica
Volume used 4 sacks Depth to top of f.p. 2.5 ft

Grout
Used? ☒ Yes ☐ No Volume used ___
☐ Neat Cement ☒ Bentonite ☐ ___
Method of installation poured
Depth from 0 ft to 0.5 ft
from ___ ft to ___ ft

Development
Method pumped Duration 40 minutes
Dates 3/24/87 Sand content after 5 min 0
Chemicals used None

Static Water Level
0.1 ft ☒ below ☐ above grade
Date measured 3/24/87

Pumping Water Level
N/A ft ☐ below ☐ above grade Date ___
After ___ hrs pumping at ___ gpm

Specific Capacity N/A gpm/ft of drawdown at ___ hours
Date ___

Pump
Date installed N/A Type ___
Manufacturer ___ Model No ___
H.P. ___ Volts ___ Capacity ___
Depth of pump intake setting ___ No. of stages ___
☐ Oil ☐ Water lubrication Power source ___
Material of drop pipe ___ bowls ___
shafting ___ impellers ___ Bowl dia ___
Column pipe dia ___ Length ___ Modifications ___

Well Head Completion
Pitless adaptor Basement offset Distance above grade 2.5 ft

Nearest Sources of Possible Contamination
___ ft Direction ___ Type ___
Well disinfected upon completion? Yes No

Geophysical Logs Run

No

Water Quality
Sample taken? ☒ Yes ☐ No
Where analyzed ITC Environmental Consultants, Inc.

Contractor Name and Address

Name of Driller Southwestern Laboratories, Inc.
State License Number ___

Date well completed 3/24/87

WELL MAINTENANCE RECORD

Problem	Corrective Action taken	Date	Specific Capacity (gpm/ft of drawdown)	
			Before	After

DEPARTMENT OF THE NAVY
SOUTHERN DIVISION
NAVAL FACILITIES ENGINEERING COMMAND
2155 EAGLE DR P O BOX 10068
CHARLESTON S C 29411-0068

WELL DATA REPORT

WELL NUMBER GPT - 4-2 AREA 4

DATE OF INSTALLATION 3/19/87

WELL HOLE DATA

Drill Date 3/19/87 Well Driller Southwestern Laboratories, Inc.

Depth of Boring 28 ft Purpose of Boring Soil Sampling and Monitoring Well Installation

Drilling Method Hollow-stem auger Mud Type None

WATER LEVEL DATA (All measurements from top of casing)

Water Level 4.9 ft Date of Measurement 3/24/87

DEVELOPMENT DATA

Development Method Pumped

Length of Time Developed 40 minutes

LOCATION OF BOREHOLE INFORMATION

Drillers Log X Geophysical Log

Physical Core X Cutting Samples

Water Level Observations 5.03' on 3/30/87

DRILLED BY S.W. Labs SCCWD#

DEVELOPED BY HLA SCCWD#

TECHNICAL OVERSIGHT BY HLA

DEPARTMENT OF THE NAVY
SOUTHERN DIVISION
NAVAL FACILITIES ENGINEERING COMMAND
2155 EAGLE DR., P O BOX 10068
CHARLESTON S C 29411-0068

WELL CONSTRUCTION DETAILS

WELL NUMBER GPT - 4-2

DATE OF INSTALLATION 3/19/87

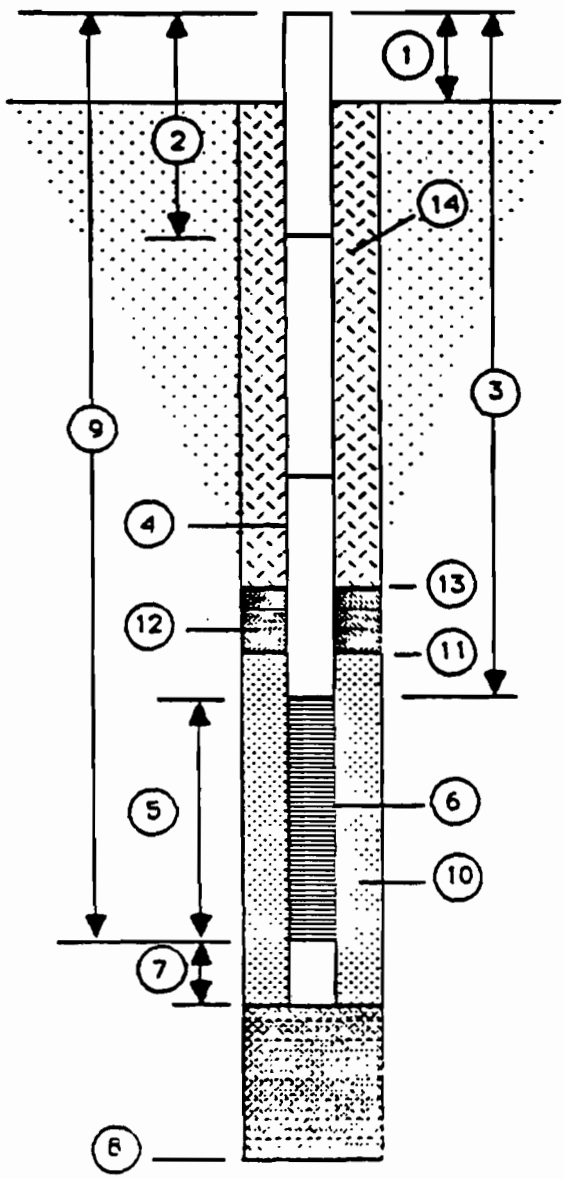

1. Height of Casing above ground 2.5 ft
2. Depth to first Coupling 5.2 ft

   Coupling Interval Depths 15.2 ft, 25.2 ft
3. Total Length of Blank Pipe 5.2 ft
4. Type of Blank Pipe Schedule 40 PVC
5. Length of Screen 23 ft
6. Type of Screen Schedule 40 PVC, .020 slotted
7. Length of Sump N/A
8. Total Depth of Boring 28 ft Hole Diameter 6-3/4 in
9. Depth To Bottom of Screen 28.2 ft
10. Type of Screen Filter #1 sand

    Quantity Used 450 lbs. Size 10/20 U/C
11. Depth To Top of Filter 2 ft
12. Type of Seal 1/2-inch bentonite pellets

    Quantity Used 12 lbs.
13. Depth To Top of Seal 5 ft
14. Type of Grout cement-bentonite

    Grout Mixture 20:1

    Method of Placement poured

COMMENTS ON INSTALLATION

WELL AND PUMP DATA

Location of Well: GPT - 4-2

County	Township Number	Range Number	Section No.	Fraction	
Harrison	8 N or S	12 E or W	1	—	SE NE ¼ ¼ ¼

Property owner's name and address:
NCBC Gulfport
Gulfport, Mississippi

Address and City or Distance and Direction from Road Intersections

Show exact location of well in section grid with an 'x' — **Sketch map of well location**

N
S
1 mile

Addition Name
Block Number
Lot Number

Well depth: 25.7 ft
Datum point from which all measurements are taken: Ground Surface

Method of Drilling: Cable tool; Direct rotary; Reverse rotary; Hollow rod; Air rotary; Jetted; Driven; Bucket auger; Flight auger; Dug; x Hollow stem auger

Use: Domestic; Irrigation; Test Well; Public supply; Municipal; Heating or cooling; Industrial; Commercial; x Monitoring

Casing Type: Steel; Galv; x PVC; SS; x Threaded; Welded; Solvent welded; Height above/below surface 2.5 ft; Drive shoe? Yes ___ No ___

2 in	to 2.7 ft	Wgt ___ lb/ft	Sch No 40	Hole diameter 6-3/4 in	to 28 ft
___ in	to ___ ft	Wgt ___ lb/ft	Sch No ___	___ in	to ___ ft
___ in	to ___ ft	Wgt ___ lb/ft	Sch No ___	___ in	to ___ ft

Remarks, Elevation, Source of Data, etc.
N 258250.00 E 403825.13 (MS State Plane)
Elevation 28.76 ft (NGVD)

Borehole data

Formation Log	Color	Hardness	From	To
Topsoil	Brown	--	0	.2
Sand	Tan	dense	.2	3
Sand	Lt Gray	dense	3	11.7
Sand	Tan & Bwn	dense	11.7	26
Sandy Fat Clay	Gray	soft	26	--

Intake Portion of Well
Screen type: Schedule 40 or open hole from ___ ft to ___ ft
Manufacturer: Triloc
Material: PVC Dia 2"
Fittings: threaded Length 23 ft
Set between 2.7 ft and 25.7 ft Slot .020
___ ft and ___ ft Slot ___
___ ft and ___ ft Slot ___
Method of installation ___

Filter Pack
Source: Pearl River Plant I Gradation 10/20
Method of installation: poured Composition: silica
Volume used: 4.25 sacks Depth to top of f.p. 2 ft

Grout
Used? x Yes No Volume used ___
Neat Cement x Bentonite
Method of installation: poured
Depth from 0 ft to 0.5 ft
from ___ ft to ___ ft

Development
Method: pumped Duration: 40 min
Dates: 3/24/87 Sand content after 10 min 0
Chemicals used: None

Static Water Level
2.4 ft x below above grade
Date measured: 3/24/87

Pumping Water Level
N/A ft below above grade Date ___
After ___ hrs pumping at ___ gpm

Specific Capacity
N/A gpm/ft of drawdown at ___ hours
Date ___

Pump
Date installed: N/A Type ___
Manufacturer ___ Model No ___
H.P. ___ Volts ___ Capacity ___
Depth of pump intake setting ___ No. of stages ___
Oil Water lubrication Power source ___
Material of drop pipe ___ bowls ___
shafting ___ impellers ___ Bowl dia ___
Column pipe dia ___ Length ___ Modifications ___

Well Head Completion
Pitless adaptor Basement offset Distance above grade 2.5 ft

Nearest Sources of Possible Contamination
___ ft Direction ___ Type ___
Well disinfected upon completion? Yes No

Geophysical Logs Run
No

Water Quality
Sample taken? x Yes No
Where analyzed: JTC Environmental Consultants, Inc.

Contractor Name and Address

Name of Driller: Southwestern Laboratories, Inc.
State License Number ___

Date well completed: 3/24/87

WELL MAINTENANCE RECORD

Problem	Corrective Action Taken	Date	Specific Capacity (gpm/ft of drawdown)	
			Before	After

DEPARTMENT OF THE NAVY
SOUTHERN DIVISION
NAVAL FACILITIES ENGINEERING COMMAND
2155 EAGLE DR P O BOX 10068
CHARLESTON S C 29411-0068

WELL DATA REPORT

WELL NUMBER GPT - 4-3 AREA 4

DATE OF INSTALLATION 3/19/87

WELL HOLE DATA

Drill Date 3/19/87 Well Driller Southwestern Laboratories, Inc.

Depth of Boring 29 ft Purpose of Boring Soil Sampling and Monitoring Well Installation

Drilling Method Hollow-stem auger Mud Type none

WATER LEVEL DATA (All measurements from top of casing)

Water Level 10 ft Date of Measurement 3/23/87

DEVELOPMENT DATA

Development Method Pumped

Length of Time Developed 15 minutes

LOCATION OF BOREHOLE INFORMATION

Drillers Log X Geophysical Log

Physical Core X Cutting Samples

Water Level Observations 9.54 on 3/30/87

DRILLED BY S.W. Labs SCCWD#

DEVELOPED BY HLA SCCWD#

TECHNICAL OVERSIGHT BY HLA

DEPARTMENT OF THE NAVY
SOUTHERN DIVISION
NAVAL FACILITIES ENGINEERING COMMAND
2155 EAGLE DR., P O BOX 10068
CHARLESTON S C 29411-0068

WELL CONSTRUCTION DETAILS

WELL NUMBER GPT - 4-3

DATE OF INSTALLATION 3/19/87

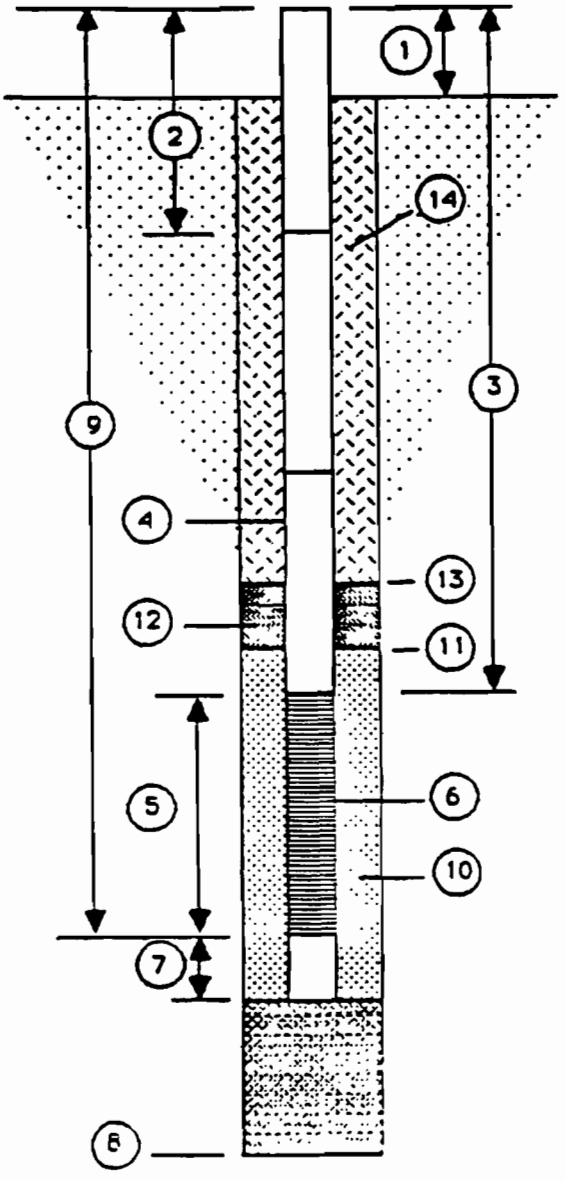

1. Height of Casing above ground 2.6 ft
2. Depth to first Coupling 5.6 ft

   Coupling Interval Depths 15.6 ft, 25.6 ft
3. Total Length of Blank Pipe 5.6 ft
4. Type of Blank Pipe Schedule 40 PVC
5. Length of Screen 23 ft
6. Type of Screen Schedule 40 PVC, .020 slotted
7. Length of Sump N/A
8. Total Depth of Boring 29 ft Hole Diameter 6-3/4 in
9. Depth To Bottom of Screen 28.6 ft
10. Type of Screen Filter #1 sand

    Quantity Used 550 lbs. Size 10/20 U/C
11. Depth To Top of Filter 2.5 ft
12. Type of Seal 1/2-inch bentonite pellets

    Quantity Used 12 pounds
13. Depth To Top of Seal 1 ft
14. Type of Grout cement-bentonite

    Grout Mixture 20:1

    Method of Placement poured

COMMENTS ON INSTALLATION

WELL AND PUMP DATA

Location of Well GPT - 4-3

County	Township Number	Range Number	Section No.	Fraction
Harrison	8 N or S	12 E or W	1	SE NE

Address and City or Distance and Direction from Road Intersections

Property owner's name and address

NCBC Gulfport
Gulfport, Mississippi

Show exact location of well in section grid with an 'x' — **Sketch map of well location**

N — S — 1 mile

Addition Name

Block Number

Lot Number

Well depth 26 ft

Datum point from which all measurements are taken Ground Surface

Method of Drilling
Cable tool · Hollow rod · Driven · Dug
Direct rotary · Air rotary · Bucket auger · x Hollow stem auger
Reverse rotary · Jetted · Flight auger

Use
Domestic · Public supply · Industrial
Irrigation · Municipal · Commercial
Test Well · Heating or cooling · X Monitoring

Casing Type
Steel · Threaded · Height above surface 2.6 ft.
Galv · Welded
X PVC · Solvent welded · Drive shoe? Yes ___ No ___
SS

					Hole diameter
2 in to 3 ft	Wgt ___ lb/ft	Sch No 40			6-3/4 in to 29 ft
___ in to ___ ft	Wgt ___ lb/ft	Sch No ___			___ in to ___ ft
___ in to ___ ft	Wgt ___ lb/ft	Sch No ___			___ in to ___ ft

Remarks, Elevation, Source of Data, etc.
N 258629.94 E 403790.10 (MS State Plane)
Elevation 31.38 ft (NGVD)

Borehole data

Formation Log	Color	Hardness	From	To
Topsoil	Brown	---	0	.4
Sand Fill	Tan	loose	.4	1
Silty Sand Fill	Dk Gray	dense	1	3.9
Organic Debris Fill	Black	dense	3.9	8.3
Sand Fill	Dk Gray	loose	8.3	11
Sand	Tan	med dns	11	26
Sandy Fat Clay	Gray	soft	26	--

Intake Portion of Well
Screen type Schedule 40 or open hole from ___ ft to ___ ft
Manufacturer Triloc
Material PVC Dia 2"
Fittings Threaded Length 23
Set between 3 ft and 26 ft Slot .020
___ ft and ___ ft Slot ___
___ ft and ___ ft Slot ___
Method of installation ___

Filter Pack
Source Pearl River Plant I Gradation 10/20
Method of installation poured Composition silica
Volume used 5.5 sacks Depth to top of fp 2.5 ft

Grout
Used? X Yes ___ No Volume used ___
Neat Cement X Bentonite
Method of installation poured
Depth from 0 ft to 1 ft
from ___ ft to ___ ft

Development
Method pumped Duration 15 minutes
Dates 3/23/87 Sand content after 10 min 0
Chemicals used None

Static Water Level
7.4 ft X below ___ above grade
Date measured 3/23/87

Pumping Water Level
N/A ft below ___ above grade Date ___
After ___ hrs pumping at ___ gpm

Specific Capacity N/A
___ gpm/ft of drawdown at ___ hours
Date ___

Pump
Date installed N/A Type ___
Manufacturer ___ Model No ___
HP ___ Volts ___ Capacity ___
Depth of pump intake setting ___ No of stages ___
Oil ___ Water lubrication Power source ___
Material of drop pipe ___ bowls ___
shafting ___ impellers ___ Bowl dia ___
Column pipe dia ___ Length ___ Modifications ___

Well Head Completion
Pitless adaptor Basement offset Distance above grade 2.5 ft

Nearest Sources of Possible Contamination
___ ft Direction ___ Type ___
Well disinfected upon completion? Yes No

Geophysical Logs Run
No

Contractor Name and Address

Name of Driller Southwestern Laboratories, Inc.
State License Number ___

Water Quality
Sample taken? X Yes No
Where analyzed JTC Environmental Consultants, Inc.

Date well completed 3/23/87

WELL MAINTENANCE RECORD

Problem	Corrective Action Taken	Date	Specific Capacity (gpm/ft of drawdown)	
			Before	After

DEPARTMENT OF THE NAVY
SOUTHERN DIVISION
NAVAL FACILITIES ENGINEERING COMMAND
2155 EAGLE DR P O BOX 10068
CHARLESTON S C 29411-0068

WELL DATA REPORT

WELL NUMBER GPT - 5-1 AREA 5

DATE OF INSTALLATION 3/14/87

WELL HOLE DATA

Drill Date 3/14/87 Well Driller Southwestern Laboratories, Inc.

Depth of Boring 24 ft Purpose of Boring Soil Sampling and Monitoring Well Installation

Drilling Method Hollow-stem auger Mud Type None

WATER LEVEL DATA (All measurements from top of casing)

Water Level 7.32 ft Date of Measurement 3/25/87

DEVELOPMENT DATA

Development Method Pumped

Length of Time Developed 45 minutes

LOCATION OF BOREHOLE INFORMATION

Drillers Log X Geophysical Log

Physical Core X Cutting Samples

Water Level Observations 7.36' on 3/30/87

DRILLED BY S.W. Labs SCCWD#

DEVELOPED BY HLA SCCWD#

TECHNICAL OVERSIGHT BY HLA

DEPARTMENT OF THE NAVY
SOUTHERN DIVISION
NAVAL FACILITIES ENGINEERING COMMAND
2155 EAGLE DR. P.O. BOX 10068
CHARLESTON S.C. 29411-0068

WELL CONSTRUCTION DETAILS

WELL NUMBER GPT - 5-1

DATE OF INSTALLATION 3/14/87

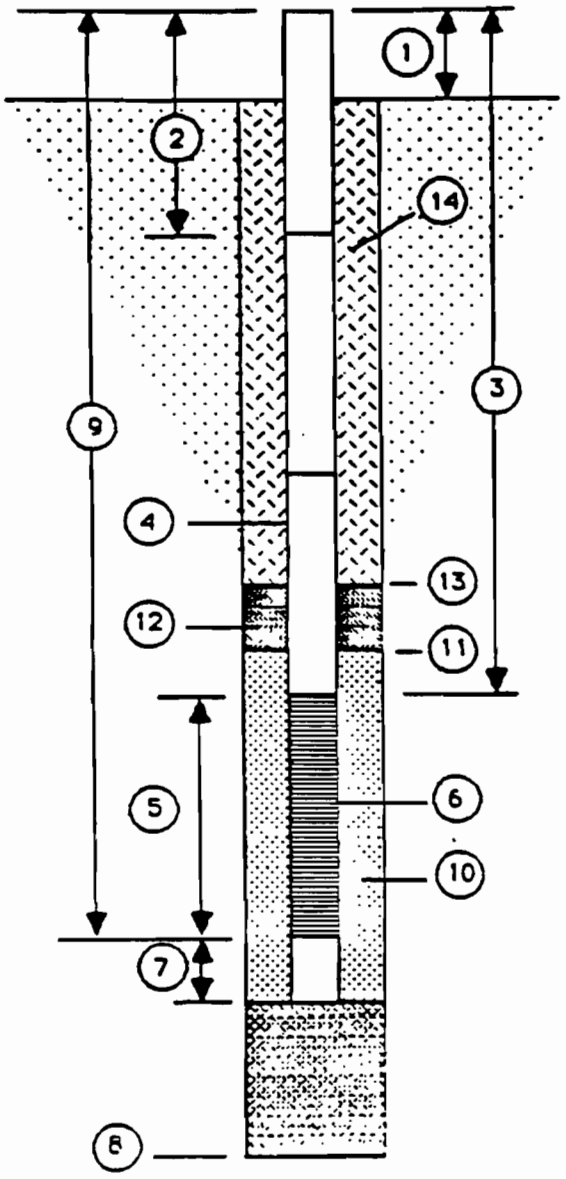

1. Height of Casing above ground 2.5 ft
2. Depth to first Coupling 5.5 ft

   Coupling Interval Depths 15.5 ft
3. Total Length of Blank Pipe 5.5 ft
4. Type of Blank Pipe 3ch. 40 PVC
5. Length of Screen 18 ft
6. Type of Screen Sch. 40 PVC, 0.020 slotted
7. Length of Sump N/A
8. Total Depth of Boring 24 ft Hole Diameter 6-3/4 in
9. Depth To Bottom of Screen 23.5 ft
10. Type of Screen Filter #1 sand

    Quantity Used 550 lb. Size 10/20 U/C
11. Depth To Top of Filter 2 ft
12. Type of Seal 1/2-inch bentonite pellets

    Quantity Used 20 lbs.
13. Depth To Top of Seal 0.5 ft
14. Type of Grout cement-bentonite

    Grout Mixture 20:1

    Method of Placement poured

COMMENTS ON INSTALLATION

WELL AND PUMP DATA

Location of Well GPT - 5-1

County	Township Number	Range Number	Section No.	Fraction
Harrison	8 N or S	12 E or W	1	SE SE

Address and City or Distance and Direction from Road Intersections

Property owner's name and address

NCBC Gulfport
Gulfport, Mississippi

Show exact location of well in section grid with an 'x' — **Sketch map of well location**

N
S
1 mile

Addition Name

Block Number

Lot Number

Remarks, Elevation, Source of Data, etc.

N 256718.91 E 403796.60 (MS State Plane)

Elevation 29.57 ft (NGVD)

Borehole data

Formation Log	Color	Hardness	From	To
Silty Sand	Brown	--	0	20.7
Fat Clay	Blue Gray	med stf	20.7	--

Well depth 21 ft

Datum point from which all measurements are taken Ground Surface

Method of Drilling
Cable tool; Direct rotary; Reverse rotary; Hollow rod; Air rotary; Jetted; Driven; Bucket auger; Flight auger; Dug; x Hollow stem auger

Use
Domestic; Irrigation; Test Well; Public supply; Municipal; Heating or cooling; Industrial; Commercial; x Monitoring

Casing Type
Steel; Galv; x PVC; SS; Threaded; Welded; Solvent welded
Height above/below surface 2.5 ft
Drive shoe? Yes ___ No ___

2 in to 3 ft Wgt ___ lb/ft Sch No 40 — Hole diameter 6-3/4 in to 4 ft
___ in to ___ ft Wgt ___ lb/ft Sch No ___ — ___ in to ___ ft
___ in to ___ ft Wgt ___ lb/ft Sch No ___ — ___ in to ___ ft

Intake Portion of Well
Screen type Schedule 40 or open hole from ___ ft to ___ ft
Manufacturer Trilock
Material PVC Dia 2 inches
Fittings Threaded Length 18 ft
Set between 3 ft and 21 ft Slot .020
___ ft and ___ ft Slot ___
___ ft and ___ ft Slot ___
Method of installation ___

Filter Pack
Source Pearl River Plant I Gradation 10/20
Method of installation poured Composition silica
Volume used 5.5 sacks Depth to top of fp 2 ft

Grout
Used? x Yes ___ No Volume used 2.5 gal
Neat Cement; x Bentonite; ___
Method of installation poured
Depth from 0 ft to 0.5 ft
from ___ ft to ___ ft

Development
Method pumped Duration 45 min
Dates 3/25/87 Sand content after 10 min 0
Chemicals used None

Static Water Level
4.82 ft x below ___ above grade
Date measured 3/25/87

Pumping Water Level
N/A ft below ___ above grade Date ___
After ___ hrs pumping at ___ gpm

Specific Capacity
N/A gpm/ft of drawdown at ___ hours
Date ___

Pump
Date installed N/A Type ___
Manufacturer ___ Model No ___
HP ___ Volts ___ Capacity ___
Depth of pump intake setting ___ No of stages ___
Oil ___ Water lubrication Power source ___
Material of drop pipe ___ bowls ___
shafting ___ impellers ___ Bowl dia ___
column pipe dia ___ Length ___ Modifications ___

Well Head Completion
Pitless adaptor Basement offset Distance above grade 2.6 ft

Nearest Sources of Possible Contamination
___ ft Direction ___ Type ___
Well disinfected upon completion? Yes No

Geophysical Logs Run

No

Contractor Name and Address

Name of Driller Southwestern Laboratories Inc.
State License Number ___

Water Quality
Samples taken x Yes ___
Where analyzed JTC Environmental Consultants, Inc.

Date well completed 3/25/87

WELL MAINTENANCE RECORD

Problem	Corrective Action Taken	Date	Specific Capacity (gpm/ft of drawdown)	
			Before	After

DEPARTMENT OF THE NAVY
SOUTHERN DIVISION
NAVAL FACILITIES ENGINEERING COMMAND
2155 EAGLE DR P O BOX 10068
CHARLESTON S C 29411-0068

WELL DATA REPORT

WELL NUMBER GPT - 5-2 AREA 5

DATE OF INSTALLATION 3/15/87

WELL HOLE DATA

Drill Date 3/15/87 Well Driller Southwestern Laboratories, Inc.

Depth of Boring 19 ft Purpose of Boring Soil Sampling and Monitoring Well Installation

Drilling Method Hollow-stem auger Mud Type None

WATER LEVEL DATA (All measurements from top of casing)

Water Level 5.39 ft Date of Measurement 3/25/87

DEVELOPMENT DATA

Development Method Pumped

Length of Time Developed 20 minutes

LOCATION OF BOREHOLE INFORMATION

Drillers Log X Geophysical Log

Physical Core X Cutting Samples

Water Level Observations 5.27' on 3/30/87

DRILLED BY S.W. Labs SCCWD#

DEVELOPED BY HLA SCCWD#

TECHNICAL OVERSIGHT BY HLA

DEPARTMENT OF THE NAVY
SOUTHERN DIVISION
NAVAL FACILITIES ENGINEERING COMMAND
2155 EAGLE DR. P O BOX 10068
CHARLESTON S C 29411-0068

WELL CONSTRUCTION DETAILS

WELL NUMBER GPT - 5-2

DATE OF INSTALLATION 3/15/87

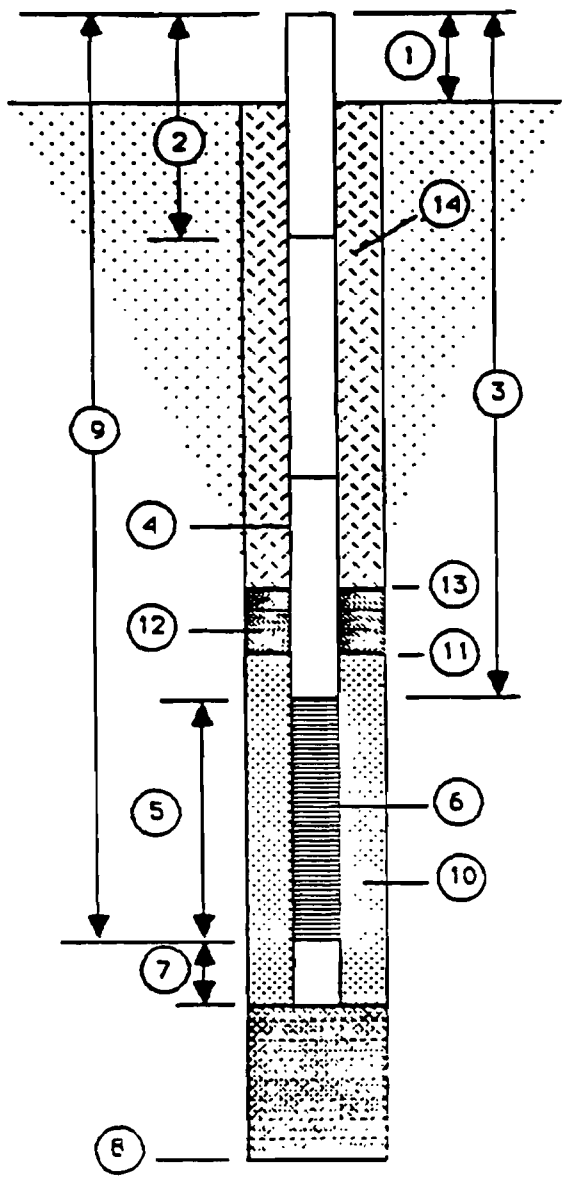

1. Height of Casing above ground 2.5 ft
2. Depth to first Coupling 2.5 ft
   Coupling Interval Depths 5.0 ft, 15.0 ft
3. Total Length of Blank Pipe 5 ft
4. Type of Blank Pipe Sch. 40 PVC
5. Length of Screen 15.5 ft
6. Type of Screen Sch. 40 PVC, 0.020 slotted
7. Length of Sump N/A
8. Total Depth of Boring 19 ft Hole Diameter 6-3/4 in
9. Depth To Bottom of Screen 20.5 ft
10. Type of Screen Filter #1 Sand
    Quantity Used 450 lbs Size 10/20 U/C
11. Depth To Top of Filter 2 ft
12. Type of Seal 1/2-inch bentonite pellets
    Quantity Used 30 lbs.
13. Depth To Top of Seal 0.5 ft
14. Type of Grout cement-bentonite
    Grout Mixture 20:1
    Method of Placement poured

COMMENTS ON INSTALLATION

WELL AND PUMP DATA

Location of Well GPT - 5-2

County	Township Number	Range Number	Section No.	Fraction
Harrison	8 N or S	12 E or W	1	SE SE ¼ ¼ ¼

Property owner's name and address

NCBC Gulfport
Gulfport, Mississippi

Address and City or Distance and Direction from Road Intersections

Show exact location of well in section grid with an "x" — **Sketch map of well location**

N
S
1 mile

Addition Name

Block Number

Lot Number

Remarks, Elevation, Source of Data, etc.

N 256708.02 E 40411[illegible] (MS State Plane)

Elevation 27.55 ft (NG[illegible]

Borehole data

Formation Log	Color	Hardness	From	To
Silty Sand	Brown	-	0	5.7
Sand	Dk Brown	-	5.7	17.5
Fat Clay	Blue Gray	soft	17.5	-

Well depth 18 ft

Datum point from which all measurements are taken Ground Surface

Method of Drilling
☐ Cable tool ☐ Hollow rod ☐ Driven ☐ Dug
☐ Direct rotary ☐ Air rotary ☐ Bucket auger ☒ Hollow stem auger
☐ Reverse rotary ☐ Jetted ☐ Flight auger

Use
☐ Domestic ☐ Public supply ☐ Industrial ☐ _____
☐ Irrigation ☐ Municipal ☐ Commercial
☐ Test Well ☐ Heating or cooling ☒ Monitoring

Casing Type
☐ Steel ☒ Threaded
☐ Galv ☐ Welded
☒ PVC ☐ Solvent welded
☐ SS

Height above land surface 2.5 ft
Drive shoe? Yes ___ No ___

					Hole diameter
2 in to 2.5 ft	Wgt ___ lb/ft	Sch No 40	6-3/4 in to 19 ft
___ in to ___ ft	Wgt ___ lb/ft	Sch No ___	___ in to ___ ft
___ in to ___ ft	Wgt ___ lb/ft	Sch No ___	___ in to ___ ft

Intake Portion of Well
Screen type Schedule 40 or open hole from ___ ft to ___ ft
Manufacturer Trilock
Material PVC Dia 2 inches
Fittings Threaded Length 15.5 ft
Set between 2.5 ft and 18 ft Slot .020
___ ft and ___ ft Slot ___
___ ft and ___ ft Slot ___
Method of installation ___

Filter Pack
Source Pearl River Plant I Gradation 10/20
Method of installation poured Composition silica
Volume used 4.5 sacks Depth to top of fp 2 ft

Grout
Used? ☒ Yes ☐ No Volume used ___
☐ Neat Cement ☒ Bentonite ☐ ___
Method of installation poured
Depth from 0 ft to 0.5 ft
from ___ ft to ___ ft

Development
Method pumped Duration 20 minutes
Dates 3/25/87 Sand content after 10 min. 0
Chemicals used none

Static Water Level
2.89 ft ☒ below ☐ above grade
Date measured 3/25/87

Pumping Water Level
N/A ft ☐ below ☐ above grade Date ___
After ___ hrs pumping at ___ gpm

Specific Capacity N/A
___ gpm/ft of drawdown at ___ hours
Date ___

Pump N/A
Date installed ___ Type ___
Manufacturer ___ Model No ___
H P ___ Volts ___ Capacity ___
Depth of pump intake setting ___ No of stages ___
☐ Oil ☐ Water lubrication Power source ___
Material of drop pipe ___ bowls ___
shafting ___ impellers ___ Bowl dia ___
Column pipe dia ___ Length ___ Modifications ___

Well Head Completion
Pitless adaptor Basement offset Distance above grade 2.5 ft

Nearest Sources of Possible Contamination
___ ft Direction ___ Type ___
Well disinfected upon completion? Yes No

Geophysical Logs Run

No

Water Quality
Sample taken? ☒ Yes ☐ No
Where analyzed JTC Environmental Laboratories, Inc.

Driller Name and Address

Name of Driller Southwestern Laboratories, Inc.
State License Number ___

Date well completed 3/25/87

WELL MAINTENANCE RECORD

Problem	Corrective Action Taken	Date	Specific Capacity (gpm/ft of drawdown)	
			Before	After

DEPARTMENT OF THE NAVY
SOUTHERN DIVISION
NAVAL FACILITIES ENGINEERING COMMAND
2155 EAGLE DR P O BOX 10068
CHARLESTON S C 29411-0068

WELL DATA REPORT

WELL NUMBER GPT - 5-3 AREA 5

DATE OF INSTALLATION 3/15/87

WELL HOLE DATA

Drill Date 3/15/87 Well Driller Southwestern Laboratories, Inc.

Depth of Boring 21.5 ft Purpose of Boring Soil Sampling and Monitoring Well Installation

Drilling Method Hollow-stem auger Mud Type None

WATER LEVEL DATA (All measurements from top of casing)

Water Level 8.95 ft Date of Measurement 3/25/87

DEVELOPMENT DATA

Development Method Pumped

Length of Time Developed 30 minutes

LOCATION OF BOREHOLE INFORMATION

Drillers Log X Geophysical Log

Physical Core X Cutting Samples

Water Level Observations 9.47' on 3/30/87

DRILLED BY S.W. Labs SCCWD#

DEVELOPED BY HLA SCCWD#

TECHNICAL OVERSIGHT BY HLA

DEPARTMENT OF THE NAVY
SOUTHERN DIVISION
NAVAL FACILITIES ENGINEERING COMMAND
2155 EAGLE DR. P O BOX 10068
CHARLESTON S C 29411-0068

WELL CONSTRUCTION DETAILS

WELL NUMBER GPT - 5-3

DATE OF INSTALLATION 3/15/87

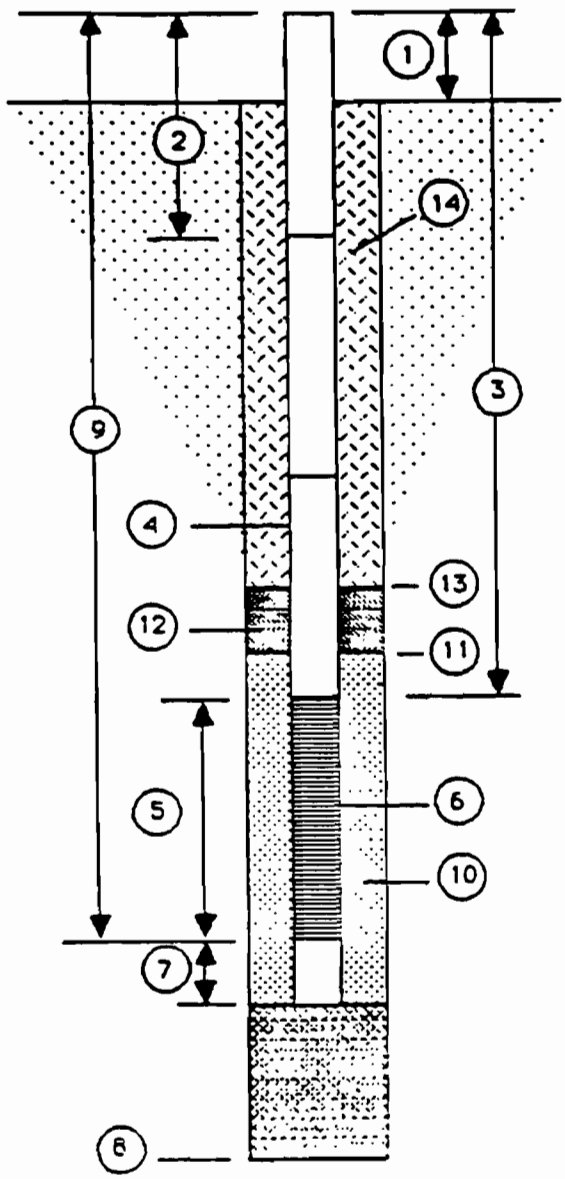

1. Height of Casing above ground 2.5 ft
2. Depth to first Coupling 4.0 ft

   Coupling Interval Depths 6.5 ft, 16.5 ft
3. Total Length of Blank Pipe 6.5 ft
4. Type of Blank Pipe Sch. 40 PVC
5. Length of Screen 17 ft
6. Type of Screen Sch. 40 PVC, 0.020 slotted
7. Length of Sump N/A
8. Total Depth of Boring 21.5 ft Hole Diameter 6-3/4 in
9. Depth To Bottom of Screen 23.5 ft
10. Type of Screen Filter # 1 sand

    Quantity Used 400 lbs. Size 10/20 U/C
11. Depth To Top of Filter 2 ft
12. Type of Seal 1/2-inch bentonite pellets

    Quantity Used 25 lbs.
13. Depth To Top of Seal 0.3 ft
14. Type of Grout cement-bentonite

    Grout Mixture 20:1

    Method of Placement poured

COMMENTS ON INSTALLATION

WELL AND PUMP DATA

Location of Well GPT - 5-3

County	Township Number	Range Number	Section No.	Fraction
Harrison	8 N or S	12 E or W	1	— NE SE ¼ ¼ ¼

Address and City or Distance and Direction from Road Intersections

Property owner's name and address

NCBC Gulfport
Gulfport, Mississippi

Show exact location of well in section grid with an 'x' — **Sketch map of well location**

N — S — 1 mile

Addition Name

Block Number

Lot Number

Well depth 21 ft

Datum point from which all measurements are taken Ground Surface

Method of Drilling
Cable tool; Direct rotary; Reverse rotary; Hollow rod; Air rotary; Jetted; Driven; Bucket auger; Flight auger; Dug; x Hollow stem auger

Use
Domestic; Irrigation; Test Well; Public supply; Municipal; Heating or cooling; Industrial; Commercial; x Monitoring

Casing Type
[ ] Steel; [ ] Galv; [x] PVC; [ ] SS
[x] Threaded; [ ] Welded; [ ] Solvent welded
Height above surface 2.5 ft
Drive shoe? Yes ___ No ___

in	to ft	Wgt lb/ft	Sch No	Hole diameter
2	4		40	6-3/4 to 21 ft
				in to ft
				in to ft

Remarks, Elevation, Source of Data, etc.
N 257283.72 E 403384.58 (MS State Plane)
Elevation 30.82 ft (NGVD)

Borehole data

Formation Log	Color	Hardness	From	To
Clayey Sand	Brown	--	0	5.8
Sand	Lt Gray	--	5.8	20
Fat Clay	Gray	soft	20	---

Intake Portion of Well
Screen type Schedule 40 or open hole from ___ ft to ___ ft
Manufacturer Trilock
Material PVC Dia 2 inches
Fittings Threaded Length 17 ft
Set between 4 ft and 21 ft Slot .020
___ ft and ___ ft Slot ___
___ ft and ___ ft Slot ___
Method of installation ___

Filter Pack
Source Pearl River Plant I Gradation 10/20
Method of installation poured Composition silica
Volume used 4 sacks Depth to top of fp 2

Grout
Used? x Yes ___ No Volume used 2.5 gal
___ Neat Cement x Bentonite ___
Method of installation poured
Depth from ___ ft to ___ ft
from 0 ft to 0.3 ft

Development
Method pumped Duration 25 minutes
Dates 3/25/87 Sand content after 10 min 0
Chemicals used none

Static Water Level
6.45 ft x below ___ above grade
Date measured 3/25/87

Pumping Water Level
N/A ft below ___ above grade Date ___
After ___ hrs pumping at ___ gpm

Specific Capacity
N/A gpm/ft of drawdown at ___ hours
Date ___

Pump
Date installed N/A Type ___
Manufacturer ___ Model No ___
HP ___ Volts ___ Capacity ___
Depth of pump intake setting ___ No of stages ___
___ Oil ___ Water lubrication Power source ___
Material of drop pipe ___ bowls ___
shafting ___ impellers ___ Bowl dia ___
Column pipe dia ___ Length ___ Modifications ___

Well Head Completion
Pitless adaptor Basement offset Distance above grade 2.5 ft

Nearest Sources of Possible Contamination
___ ft Direction ___ Type ___
Well disinfected upon completion? Yes No

Geophysical Logs Run
No

Contractor Name and Address

Name of Driller Southwestern Laboratories, Inc.
State License Number ___

Water Quality
Sample taken x Yes ___ No
Where analyzed ITC Environmental Consultants, Inc.

Date well completed 3/25/87

WELL MAINTENANCE RECORD

Problem	Corrective Action Taken	Date	Specific Capacity (gpm/ft of drawdown)	
			Before	After

DEPARTMENT OF THE NAVY
SOUTHERN DIVISION
NAVAL FACILITIES ENGINEERING COMMAND
2155 EAGLE DR P O BOX 10068
CHARLESTON S C 29411-0068

WELL DATA REPORT

WELL NUMBER GPT - 6-1 AREA 6

DATE OF INSTALLATION 3/17/87

WELL HOLE DATA

Drill Date 3/17/87 Well Driller Southwestern Laboratories, Inc.

Depth of Boring 29.5 ft Purpose of Boring Soil Sampling and Monitoring Well Installation

Drilling Method Hollow-stem auger Mud Type None

WATER LEVEL DATA (All measurements from top of casing)

Water Level 6.0 ft Date of Measurement 3/24/87

DEVELOPMENT DATA

Development Method Pumped

Length of Time Developed 15 minutes

LOCATION OF BOREHOLE INFORMATION

Drillers Log X Geophysical Log

Physical Core X Cutting Samples

Water Level Observations 6.89' on 3/30/87

DRILLED BY S.W. Labs SCCWD#

DEVELOPED BY HLA SCCWD#

TECHNICAL OVERSIGHT BY HLA

DEPARTMENT OF THE NAVY
SOUTHERN DIVISION
NAVAL FACILITIES ENGINEERING COMMAND
2155 EAGLE DR., P.O BOX 10068
CHARLESTON S C 29411-0068

WELL CONSTRUCTION DETAILS

WELL NUMBER GPT - 6-1

DATE OF INSTALLATION 3/17/87

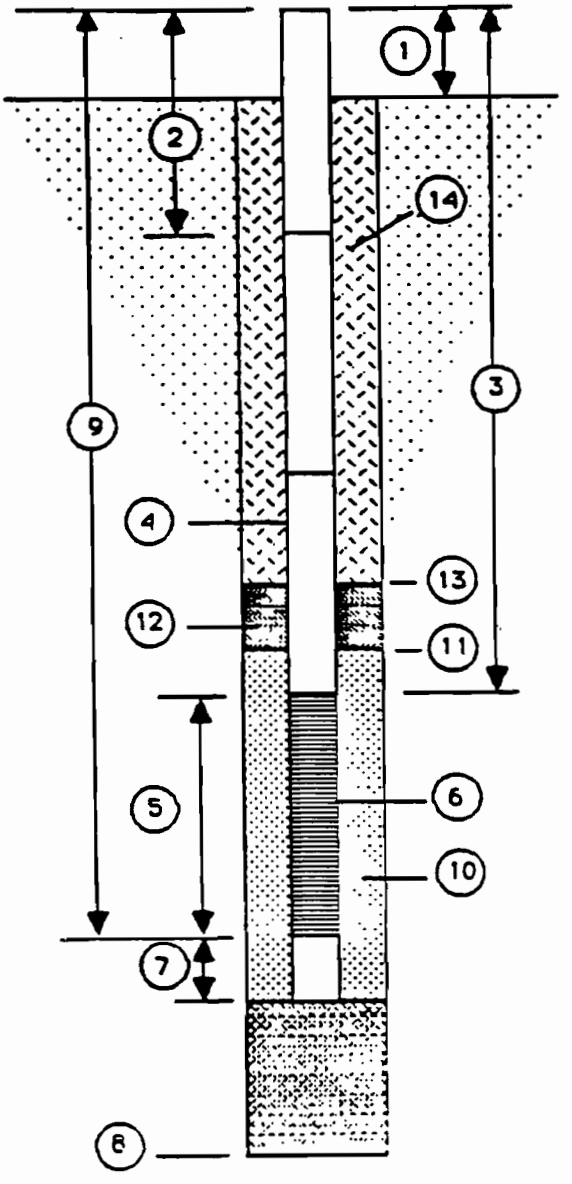

1. Height of Casing above ground 2.5 ft
2. Depth to first Coupling 5.5 ft

   Coupling Interval Depths 15.5 ft, 25.5 ft
3. Total Length of Blank Pipe 5.5 ft
4. Type of Blank Pipe Schedule 40 PVC
5. Length of Screen 24.5 ft
6. Type of Screen Sch. 40 PVC, 0.020 slotted
7. Length of Sump N/A
8. Total Depth of Boring 29.5 ft Hole Diameter 6-3/4 in
9. Depth To Bottom of Screen 30.0 ft
10. Type of Screen Filter # 1 sand

    Quantity Used 550 lbs. Size 10/20 U/C
11. Depth To Top of Filter 2.5 ft
12. Type of Seal 1/2-inch bentonite pellets

    Quantity Used 25 pounds
13. Depth To Top of Seal 0.5 ft
14. Type of Grout cement-bentonite

    Grout Mixture 20:1

    Method of Placement poured

COMMENTS ON INSTALLATION

APPENDIX B

Appendix B

Justification for Use of PVC

Southern Division Naval Facilities Engineering Command (SOUTHNAVFACENGCOM) is committed to using only the most reliable methods to obtain the data used in its investigations. Therefore, SOUTHNAVFACENGCOM recommends the use of well casings made of Polyvinyl chloride (PVC) material for monitoring wells installed at NAS Cecil Field. After reviewing the literature, SOUTHNAVFACENGCOM has concluded that PVC is a superior well casing material when monitoring a plume consisting of both metals and organics. Attached are two recent publication supportive of SOUTHNAVFACENGCOM's position: "Influence of Casing Materials on Trace-Level Chemicals in Well Water" (Parker, 1990) and "Leaching of metal pollutants from four well casing used for ground-water monitoring" (Hewitt, 1989).

SOUTHNAVFACENGCOM requests USEPA consider the following information as required in the "Alternate Well Casing Material Justification" form.

1. The Data Quality Objectives (DQO) for the samples to be collected from wells with PVC casing per EPA/540/G-87/003., "Data Quality Objectives for Remedial Response Activities."

Response: The DQOs for the remedial investigation (RI) at Cecil Field are to provide information of sufficient quality to support risk assessment and feasibility study conclusions. The quality assurance and quality control (QA/QC) procedures are specified in the Sampling and Analysis Plan (SAP). Sample collection and accompanying QA/QC procedures are designed to meet USEPA level 4 criteria.

2. The anticipated compounds and their concentration range.

Response: The following is a list of the contaminants that exceeded an existing maximum contaminant level (MCL) and the highest contaminant concentration detected: Lead at 385 ug/l, Chromium at 425 ug/l, benzene at 4 ug/l, Trichlorethylene at 400 ug/l, and 1,1-Dichloroethane at 210 ug/l.

3. The anticipated residence time of the sample in the well and the aquifer's productivity.

Response: Each well will be purged immediately before the sample is collected. The anticipated residence time of the water prior to sampling should be less than twenty minutes. The surficial aquifer is estimated to have a transmissivity range of 0.05 to 3.93 m^2/day.

4. The reason for not using a hybrid well.

Response: SOUTHNAVFACENGCOM feels that PVC is the preferred material when sampling mixed waste plumes. Stainless steel may absorb or adsorb heavy metals such as lead, chromium and arsenic. Also, the cutting oils used in the manufacturing of stainless-steel riser and screen are difficult to remove. These oils, if not completely removed by the decontamination cleaning, may contaminate the well. Hybrid wells introduce additional problems, such as, the junction is usually a weak point subject to breakage or is a place for down-hole equipment to become ensnared.

5. Literature on adsorption/desorption characteristics of the compounds and elements of interest for the type of PVC to be used.

Response: Two reprints are attached that evaluate the sorptive characteristics of stainless steel and PVC. The study tilted "Influence of Casing Materials on Trace-level Chemicals in Well Water" (Parker, 1990), evaluated all the chemicals of concern identified in previous Cecil Field studies except benzene and 1,1-dichloroethane.

6. If an anticipated increase in thickness of the wall thickness will require a larger annular space.

Response: No change in the annular space is required.

7. The type of PVC to be used and if available the manufacturers specifications. And an assurance that the PVC to be used does not leach, mask, react or otherwise interfere with the contaminants being monitored within the limits of the DQO(s).

Response: The PVC will comply with American Society of Testing and Materials (ASTM) F480 and D1785.

SOUTHNAVFACENGCOM strongly believes that the quality of data obtained by using PVC well construction materials will be equal to or an improvement over the use of stainless steel as a general purpose well construction material.

DEPARTMENT OF THE ARMY
COLD REGIONS RESEARCH AND ENGINEERING LABORATORY, CORPS OF ENGINEERS
HANOVER, NEW HAMPSHIRE 03755-1290
February 25, 1991

Applied Research Branch -

Ms. Peggy Lane
ABB Environmental Services
2571 Executive Center Circle, East
Suite 100
Tallahassee, Florida 32301

Dear Ms. Lane:

I have enclosed a copy of our journal article that compares the sorption of organics and metals by four well casing materials (PVC, PFTE, and stainless steel types 304 and 316). I have also included a more recent study that compares the leaching of metals from these materials; this study was conducted by Alan Hewitt. It is our opinion that since you are monitoring for both VOC's and metals that PVC is the best material to use in your monitoring wells, provided that you do not anticipate encountering an undiluted solvent of PVC. Stainless steel is not a good casing material to use when monitoring for metals. Also, stainless steel should not be placed in any environment that is corrosive. "The Handbook of Suggested Practices for the Design and Installation of Ground-Water Monitoring Wells," by Linda Aller et al. (1989, published by the National Water Well Association, Dublin, Ohio) has an excellent discussion on corrosion of steel products.

If you would like any additional questions answered, please do not hesitate to call me at 603-646-4393. Alan Hewitt can answer any questions on our metals studies. He can be reached at 603-646-4388.

23 FEB 91 23 19

I hope you find this material useful.

Sincerely,

Louise Parker

Louise V. Parker
Research Physical Scientist
Applied Research Branch

2 enclosures

Special Report 89-32

September 1989

US Army Corps
of Engineers
Cold Regions Research &
Engineering Laboratory

Leaching of metal pollutants from four well casings used for ground-water monitoring

Alan D. Hewitt

Prepared for
U.S. ARMY TOXIC AND HAZARDOUS MATERIALS AGENCY
REPORT CETHA-TE-CR-89186

Approved for public release; distribution is unlimited.

UNCLASSIFIED
SECURITY CLASSIFICATION OF THIS PAGE

REPORT DOCUMENTATION PAGE

Form Approved
OMB NO. 0704-0188
Exp. Date: Jun 30, 1986

1a. REPORT SECURITY CLASSIFICATION Unclassified	1b. RESTRICTIVE MARKINGS
2a. SECURITY CLASSIFICATION AUTHORITY	3. DISTRIBUTION/AVAILABILITY OF REPORT Approved for public release; distribution is unlimited.
2b. DECLASSIFICATION/DOWNGRADING SCHEDULE	
4. PERFORMING ORGANIZATION REPORT NUMBER(S) Special Report 89-32	5. MONITORING ORGANIZATION REPORT NUMBER(S) CETHA-TE-CR-89186
6a. NAME OF PERFORMING ORGANIZATION U.S. Army Cold Regions Research and Engineering Laboratory 6b. OFFICE SYMBOL (If applicable) CECRL	7a. NAME OF MONITORING ORGANIZATION U.S. Army Toxic and Hazardous Materials Agency
6c. ADDRESS (City, State, and ZIP Code) 72 Lyme Road Hanover, N.H. 03755-1290	7b. ADDRESS (City, State, and ZIP Code) Aberdeen Proving Ground Maryland 21010
8a. NAME OF FUNDING/SPONSORING ORGANIZATION 8b. OFFICE SYMBOL (If applicable)	9. PROCUREMENT INSTRUMENT IDENTIFICATION NUMBER
8c. ADDRESS (City, State, and ZIP Code)	10. SOURCE OF FUNDING NUMBERS PROGRAM ELEMENT NO. / PROJECT NO. / TASK NO. / WORK UNIT ACCESSION NO.

11. TITLE (Include Security Classification)
Leaching of Metal Pollutants From Four Well Casings Used for Ground-Water Monitoring

12. PERSONAL AUTHOR(S)
Hewitt, Alan D.

13a. TYPE OF REPORT	13b. TIME COVERED FROM ____ TO ____	14. DATE OF REPORT (Year, Month, Day)	15. PAGE COUNT
		September 1989	15

16. SUPPLEMENTARY NOTATION

17. COSATI CODES			18. SUBJECT TERMS (Continue on reverse if necessary and identify by block number)
FIELD	GROUP	SUB-GROUP	Ground-water monitoring; Ground-water pollution; Metal pollutants; PTFE; PVC; Stainless steel; Well casings

19. ABSTRACT (Continue on reverse if necessary and identify by block number)

Polytetrafluoroethylene (PTFE), polyvinylchloride (PVC), stainless steel 304 (SS 304) and stainless steel 316 (SS 316) well casings were tested for suitability for ground-water monitoring. A laboratory experiment, testing for the leaching of Ag, As, Ba, Cd, Cr, Hg, Pb, Se and Cu, was run in triplicate by exposing sections of the well casings to ground water for four periods ranging from 1 to 40 days. The results showed that PTFE did not leach any of the nine analytes studied, while SS 316 and PVC showed significant leaching of Cr, Cd and Pb; SS 316 also leached significant amounts of Ba and Cu. Stainless steel 304 showed significant leaching of Cr and Pb. In every case where contamination was observed, the release of metal analyte, when averaged over all of the exposure periods, was the greatest from either SS 304 or SS 316. Released contaminants were sorbed back onto the well casings in several cases.

20. DISTRIBUTION/AVAILABILITY OF ABSTRACT ☒ UNCLASSIFIED/UNLIMITED ☐ SAME AS RPT. ☐ DTIC USERS	21. ABSTRACT SECURITY CLASSIFICATION Unclassified
22a. NAME OF RESPONSIBLE INDIVIDUAL Alan D. Hewitt	22b. TELEPHONE (Include Area Code) 603-646-4100 22c. OFFICE SYMBOL CECRL-RC

DD FORM 1473, 84 MAR — 83 APR edition may be used until exhausted. All other editions are obsolete.

SECURITY CLASSIFICATION OF THIS PAGE
UNCLASSIFIED

PREFACE

This report was prepared by Alan D. Hewitt, Research Chemist, Geochemical Sciences Branch, Research Division, U.S. Army Cold Regions and Research and Engineering Laboratory. This project was funded by the U.S. Army Toxic and Hazardous Materials Agency (R-90 Multi-analytical Services), Martin H. Stutz, project monitor.

The author thanks Dr. Thomas F. Jenkins and Dr. Clarence Grant for assistance in the experimental design, and Dr. Charles M. Reynolds, James H. Cragin, Dr. Jenkins, Dr. Iskandar K. Iskandar and Dr. Grant for critical reviews of the text.

The contents of this report are not to be used for advertising or promotional purposes. Citation of brand names does not constitute an official endorsement or approval of the use of such commercial products.

CONTENTS

	Page
Abstract	i
Preface	ii
Introduction	1
Materials and methods	2
Materials	2
Test design	2
Analysis	3
Results	5
Barium	5
Cadmium	5
Chromium	5
Lead	5
Copper	7
Arsenic, mercury, selenium and silver	7
Discussion	7
Conclusion	9
Literature cited	9
Appendix A: Levels of Cd, Pb, Cr, Ba and Cu determined in ground-water solutions	11

ILLUSTRATIONS

Figure

1. Ground-water leaching of metals from well casings being examined .. 7

TABLES

Table

1. Recovery of Cd, Cr and Pb from ground water stored in the sample jars and allowed to equilibrate before being acidified with concentrated HNO_3 3
2. EPA interim primary drinking water quality levels and the method detection limits 3
3. Summary of ANOVA and LSD determinations for average analyte concentrations 4
4. Physical state of stainless steel pipes after exposure to ground water .. 8
5. Average metal concentrations for the controls based on the groups established by the Cu populations 8
6. Summary of results 9

Leaching of Metal Pollutants From Four Well Casings Used for Ground-water Monitoring

ALAN D. HEWITT

INTRODUCTION

Ground-water monitoring requires the installation of conduits to transfer water to the surface for collection. Four commonly used well casings are made from 2-in. (5-cm) diameter polyvinylchloride (PVC), stainless steel 304 (SS 304), stainless steel 316 (SS 316) and polytetrafluoroethylene (PTFE) pipes. Representative sampling of ground water requires that materials employed in the saturated zone do not influence the concentration of analytes of interest.

Only a few studies have reported the influence of well-casing materials on the concentrations of inorganic substances in ground water during water quality analyses. Several studies have demonstrated that these materials (stainless steel, PVC and PTFE) sorb appreciable quantities of certain ionic species (Eichholz et al. 1965, Miller 1982, Hewitt 1989). Evidence also exists showing that metals are released into ground water from stainless steel and PVC pipes (Houghton and Berger 1984, Barcelona and Helfrich 1986, Hewitt 1989). The release of metal analytes by stainless steel has been associated with its corrosion, which in some instances has been observed to produce a hydrous iron precipitate (Barcelona and Helfrich 1986, Hewitt 1989).

Recently, a laboratory experiment was conducted testing the effects of ground-water composition on the well casings cited above (Hewitt 1989). In this experiment two concentrations of metals (As, Cd, Cr and Pb), pH and total organic carbon were introduced as ground-water solution variables. Results of this experiment indicated that PTFE was inert to the variables, whereas both PVC and stainless steel well casings were affected. These two materials leached and sorbed some of the metals introduced into the ground water. In addition, several stainless steel casing sections developed surface oxidation, which introduced a random source of variation by providing release mechanisms and active sites for sorption. PVC was a low-level source for Cd and provided sorption sites for Pb. Stainless steel 316 was a low-level source for Cd and provided sorption sites for As, Cr and Pb. Stainless steel 304 was also a low-level source for Cd and provided sorption sites for As and Pb. The extent of the sorption or release of metals was often influenced by the solution variables. This study concluded that the stainless steel casings were the least suitable for monitoring the metals studied (As, Cd, Cr and Pb) in the ground water solutions.

A concurrent study done at CRREL (Parker et al. 1989) looked at ground-water solutions spiked with organic compounds exposed to the same four well casings. In contrast to the results for metals, eight (cis and trans-1,2-dichloroethylene, m-nitrotoluene, trichloroethylene, chlorobenzene, o-,p- and m-dichlorobenzene) of the ten organic compounds studied sorbed more quickly and to a greater extent onto PTFE than PVC and did not sorb onto the stainless steels. The same results were obtained when the ground water was treated with 2.0 g NaCl/L to test for effects of ionic strength. These findings support the earlier work of Reynolds and Gillham (1985) who observed rapid sorption of tetrachloroethylene by PTFE well casing. They suggested that PTFE is the least desirable material for a well casing when organic compounds are monitored in ground water.

The results of these two recent CRREL studies (Hewitt 1989, Parker et al. 1989) and supporting evidence in the literature led to the suggestion that PVC may be the best compromise among these four well casings for monitoring ground water for both inorganic and organic analytes (Parker et al. 1988).

The objective of this study is to examine metal leaching characteristics of these four well-casing materials in ground water. Leaching studies that

compare these four well casings have not been reported in the literature. The results of this experiment will determine which casings are the most or the least susceptible to leaching the metals. The analytes analyzed included all of the metals on the Environmental Protection Agency's priority pollutant list, along with copper.

MATERIALS AND METHODS

Materials

The PVC and stainless steel well casings were obtained from Johnson Well Screen, and the PTFE was obtained from MIP, Inc. All well casings were specifically manufactured for ground-water monitoring. The casings all had approximately a 5-cm inner-wall diameter and were cut in lengths of approximately 2 cm. The exact length of the rings depended on the wall thickness and diameter of the pipe because we wanted to maintain a constant surface area of 80 cm^2. Cut surfaces composed 17% of the area for the PTFE and PVC well casings and 9% for the stainless steels.

Precautions were taken during pipe milling to prevent exposure to grease, dirt, oil and solvents, and to avoid excessive handling. After milling, the individual well-casing rings were rinsed with deionized water (Millipore, Type 1) and air dried before being placed into the ground-water-filled sample containers. During rinsing we made no attempt to remove surface discoloration or ink on the pipes; we used them as we had received them from the manufacturer. This limited cleaning was consistent with commonly employed field protocols.* The well-casing sections were handled with plastic gloves and nylon forceps after milling. Two sections of the SS 316 pipe were not used because excessive surface rust had formed. In general the stainless steel well casings appeared to have developed more rust during the 9-month storage period than they had when first obtained. All experimental work was performed in class 100 cleanrooms.

Polypropylene jars (69 mm od × 62 mm height, 125 mL, Model 6185-E37, Thomas Scientific) served as the sample containers. The jars were soaked in a 10% v/v concentrated, redistilled HNO_3 (G. Fredrick Smith [GFS]) deionized water solution, then rinsed with and soaked for several days in deionized water prior to use. Other materials, such as the 7.5-mL sample aliquot bottles (polyethylene, Nagle), pipette tips (Eppendorf), and the 2-L glass bottles (reagent grade HNO_3 bottles, Baker), were cleaned similarly.

Test design

Tests for the release of metals from PVC, PTFE, SS 304 and SS 316 well casings were done in triplicate by exposing sections of each to ground water for periods of 1, 5, 20 and 40 days. Three sample containers with no well casings served as controls for each of the exposure periods. The containers with and without well casings were filled with 98 mL of ground water collected from a 76-m-deep domestic well system in Weatherfield, Vermont; 60 containers, 12 with a single section of each of the four well-casing candidates (12 × 4) and 12 controls, made up the experimental sample setup. The well-casing rings were submerged in the ground-water-filled sample containers creating a pipe-surface-area-to-aqueous-volume ratio of 0.82 cm^2/cm^3. This experimental design provides a surface-area-to-solution ratio similar to that of well casings in ground-water monitoring wells below the saturated zone; however, the ratio is much lower than that which exists for well screens.

Samples were prepared by transferring weighed amounts of ground water into each jar from a single 2-L glass bottle. The jars were selected randomly for the experiment because the ground water was transported in three separate 2-L glass bottles. The pH and conductivity of the ground water from all of the bottles was 7.8 and 2.40×10^{-2} mho/cm, respectively. Ground water collected from this source previously showed similar pH and conductivity levels (Hewitt 1989). While the well casings were exposed to the ground water, the jars were sealed with a cap and stored in the dark at 24°C. After the well-casing sections had been removed from the jars at the end of each time interval, 2 mL of concentrated HNO_3 (GFS) was added to the ground water to bring the pH below 1.0. Studies have shown that acidification below pH 1.5 is effective in preventing the loss of trace metals from natural waters (Subramanian et al. 1978). The acidified, ground-water-filled jars were recapped, hand-swirled for 10 seconds, then left at rest for at least 72 hours before we transferred a 5-mL aliquot to a 7.5-mL sample vial (polyethylene, Nagle) for the subsequent determination of Ag, As, Ba, Cd, Cu, Cr, Pb and Se.

The entire experimental setup was duplicated for the analysis of Hg, except that we determined Hg immediately after the ground-water-filled jar was acidified.

In a preliminary experiment, ground water stored in the polypropylene jars was spiked with

* Personal communication with Louise V. Parker, CRREL, 1989.

Cd, Cr and Pb to see if sorption of metals ions on the jar walls would interfere with the test results. These metal ions, added to the ground water and stored for 6 days in the sample jars, were recovered upon acidification (Table 1). The desorption of metal ions from container walls has been reported by Choa et al. (1968). For this preliminary test, 5.00 µg/L of Cd, Cr and Pb was allowed to sit in ground-water-filled jars (100 mL) for 6 days. Then we added 2 mL of concentrated HNO_3 (GFS), hand swirled the solution for 10 seconds, and removed a 5-mL aliquot. A second 5-mL aliquot was removed 72 hours later, following the same procedure. The results in Table 1 show that an average of 95% of the aqueous metal was recovered immediately after acidification, and aliquots removed 3 days later showed only 2% (not significant at the 95% confidence level) additional analyte recovery. Thus the metals either remained in the laboratory ground-water solution or were desorbed from the jar walls quickly upon acidification.

Table 1. Recovery of Cd, Cr and Pb (4.90 µg/L) from ground water stored in the sample jars and allowed to equilibrate for 6 days before being acidified with 2 mL of concentrated HNO_3.

	Acidification period			
	Less than 10 minutes		*72 hours*	
	Amount * *added* (µg/L)	*Percent recovered*	*Amount* * *added* (µg/L)	*Percent recovered*
Cd	4.65	94.9	4.72	96.3
	4.72	96.3	4.85	99.0
Cr	4.48	91.4	4.58	93.5
	4.48	91.4	4.69	95.7
Pb	4.93	100.2	4.72	96.3
	4.72	96.3	5.01	102.2
Average recovery	95.1%		97.2%	

* determined

Analysis

Silver, arsenic, barium, cadmium, copper, chromium and lead were determined by Graphite Furnace Atomic Absorption (GFAA) using a Perkin-Elmer (PE) model 403 Atomic Absorption Spectrophotometer (AAS) coupled with a PE model 2200 heated graphite atomizer. Instrumental procedures followed the general guidelines provided in the manufacturer's instrument manual (Perkin-Elmer 1981). Hand injections of either 20, 50 or 100 µL were employed for the analytes mentioned above. For the determination of Se, a matrix modifier—0.015 mg Pd and 0.01 mg $Mg(NO_3)_2$—was added so that the charring temperature could be raised to 1200°C. Of this group, only As and Se determinations required deuterium background correction.

Mercury was determined by Cold Vapor Atomic Absorption (CVAA). We employed a 48-mL aliquot for the Hg determinations, following a modified Hatch and Ott (1968) procedure. Aliquots of 48 mL of ground water were reduced with 2 mL of 10% v/v stannous chloride and then sparged with Hg-free air. The reduced Hg vapor passed through a $Mg(ClO_4)_2$ water vapor trap into an optical cell designed to enhance detection (Tuncel and Atoman 1980). The optical cell was positioned in the light path of the PE model 403 AAS.

Mercury was determined the same day that well casings were removed from ground-water-filled jars to limit volatilization of Hg from solution (Coyne and Collins 1972, Lo and Wai 1975) and to avoid vapor contamination associated with storage in poly containers (Cragin 1979). All of the other metals were determined within 2 weeks after the last exposure period.

Analysis procedures were designed to achieve detection limits of 1% or less of the present domestic water quality levels set by the EPA (Table 2). Selenium, determined by graphite furnace, was the only metal with a detection limit slightly above this level (Table 2). Method Detection Limits (MDLs) were established following the procedure outlined in the Federal Register (1984) for the analysis of a sample in a given solution. The MDL estimate requires that a minimum of seven replicate determinations be made of an analyte concentration that is one to five times the estimated detection level.

Table 2. EPA interim primary drinking water quality levels (1983) and the method detection limits (MDL).

Metal	*EPA primary drinking water levels* (µg/L)	*MDL* (µg/L)
Ar	50	0.48
Ba	1000	2.4
Cd	10	0.059
Cu	1000	4.3
Cr	50	0.16
Pb	50	0.11
Hg	2.0	0.010
Se	10	0.21
Ag	50	0.12

Table 3. Summary of ANOVA and LSD determinations for average analyte concentrations (µg/L). Materials with common underlining are not different at the 95% confidence level as determined by the LSD.

Days	Well casing						
	a. Barium						
1	Control	PTFE	PVC	SS304	SS316		
	4.5	6.0	6.6	7.1	7.7		
(LSD = 1.4)							
5	PTFE	Control	PVC	SS304	SS316		
	5.3	5.8	6.6	7.8	9.9		
(LSD = 2.1)							
20	PTFE	Control	PVC	SS304	SS316		
	5.5	5.9	6.1	7.4	11.3		
(LSD = 2.2)							
40	PTFE	PVC	Control	SS304	SS316		
	5.2	5.6	5.9	7.0	10.1		
(LSD = 2.0)							
	b. Chromium						
1	Control	PTFE	PVC	SS304	SS316		
	0.20	0.22	1.23	1.60	6.06		
(LSD = 9.76)							
5	Control	PTFE	PVC	SS316	SS304		
	0.20	0.22	1.12	1.79	3.34		
(LSD = 0.31)							
20	PTFE	Control	PVC	SS316	SS304		
	0.19	0.22	1.20	3.30	4.61		
(LSD = 1.17)							
40	Control	PTFE	PVC	SS316	SS304		
	0.21	0.21	1.11	2.53	5.13		
(LSD = 1.04)							

Days	Well casing						
	c. Lead						
1	Control	PTFE	SS316	SS304	PVC		
	0.16	0.35	0.90	1.14	2.46		
(LSD = 1.45)							
5	Control	PTFE	SS316	SS304	PVC		
	0.21	0.27	1.27	1.56	2.23		
(LSD = 1.53)							
20	Control	PTFE	SS316	PVC	SS304		
	0.14	0.35	1.00	1.04	2.86		
(LSD = 2.80)							
40	PTFE	Control	PVC	SS316	SS304		
	0.21	0.33	0.78	1.26	2.06		
(LSD = 1.52)							
	d. Copper						
1	PVC	SS304	Control	PTFE	SS316		
	9.4	10.7	11.9	12.1	35.8		
(LSD = 12.0)							
5	PTFE	PVC	Control	SS304	SS316		
	7.8	9.9	10.1	11.0	42.6		
(LSD = 12.4)							
20	PVC	PTFE	Control	SS304	SS316		
	6.8	8.3	10.1	26.1	81.2		
(LSD = 38.5)							
40	PVC	PTFE	SS304	Control	SS316		
	4.4	5.2	11.5	14.0	82.3		
(LSD = 17.2)							

The MDL is obtained by multiplying the standard deviation of the replicate measurements by the appropriate one-sided *t*-statistic corresponding to $n-1$ degrees of freedom at the 99% confidence level.

Each sample aliquot with a determined analyte concentration above the MDL was analyzed at least twice. Analyte concentrations were based on the average peak heights from a strip chart recording.

Aqueous calibration standards for Ag, As, Cd, Cr, Cu, Pb, Hg and Se were prepared by diluting 1000-mg/L certified atomic absorption stock solutions (Fisher Scientific Corp.). A Ba stock standard was made by dissolving a weighed amount of $Ba(NO_3)_2$ (Baker, Reagent Grade) in deionized water. Working standards were prepared in deionized water acidified to 2% v/v with HNO_3 (GFS).

Calibrations were established by determining three different concentration standards in triplicate. Standards were randomly introduced throughout the course of sample analysis, and all of the calibration curves were linear over the concentration range examined. To see if the intercepts were significantly different from zero, we compared the residuals for the models with an intercept and for the models with zero intercept using the *F*-ratio at the 95% confidence level. Analyte concentrations in the samples and controls were determined based on the slope and intercept only if the intercept was deemed significant. Otherwise, a zero-intercept linear model was employed.

To assess leaching of metals from the surfaces of the four well-casing materials, an analysis of variance (ANOVA) was performed on those metals (Ba, Cr, Cu and Pb) that had been consistently found above the established MDL for the four well-casing materials and the control. If a significant

difference was detected by the ANOVA among the average analyte concentrations in the ground water for a given material, then a Least-Significant-Difference (LSD) analysis was performed. Both analyses (ANOVA and LSD) used the 95% confidence level. The results of these analyses established which well casings contributed particular analytes to the ground water over and above those contributed by other well casings or the control for the different exposure periods (Table 3). In addition the aqueous metal concentrations that exceed 1% of the EPA drinking water quality level were identified. This low-level warning criterion was chosen since this study did not always establish the native levels present in the ground water. Thus, the contribution of metals from the well casings could range from one or more orders of magnitude above the background concentrations.

RESULTS

Barium

The analysis of the 1-day exposure samples showed that all of the ground-water-filled vessels containing pipe sections had aqueous Ba concentrations that were significantly greater than that of the control; however, all of the values were low (Table 3a). The subsequent exposure periods do not follow this pattern but instead established that SS 316 was the only material that consistently contributed significant levels of Ba to the solution relative to the other samples and the controls (Fig. 1a). The average increase in aqueous concentration for the ground water exposed to SS 316 was about 70% compared to the control. After 5 days of exposure, ground water in contact with SS 316 developed aqueous Ba concentrations that exceeded 1% of the drinking water quality level established by the EPA. None of the other well casings tested produced aqueous Ba concentrations that exceeded 1% of the EPA drinking water quality criterion or were significantly different from the control after the initial exposure period.

Cadmium

We did not use ANOVA with Cd since the majority of concentrations determined were below the MDL (Appendix A). After 1 day of exposure, both ground-water solutions containing SS 316 and PVC had aqueous Cd that exceeded 1% of the EPA drinking water quality level.

Figure 1b shows the average Cd concentrations determined for the control and well casings. It appears that Cd is initially released from SS 316 and PVC but becomes resorbed onto the well casing with time. Stainless steel 316 contributes approximately an order of magnitude (more than 10% of the EPA drinking water quality level in some cases) more Cd than PVC for equivalent exposure periods.

Chromium

Beyond the 1-day exposure, the analysis consistently demonstrated that both stainless steel well casings contributed significantly greater quantities of Cr to the ground water than the control or the other materials tested (Table 3b). These metal well casings, along with PVC, increased Cr concentrations in the ground water above 1% of the EPA drinking water quality level (Fig. 1c). The extent of the Cr contamination coming from the PVC was three to five times less than that coming from the SS 304, which usually showed the highest average contamination for a given exposure period, the exception being the initial exposure period.

The ANOVA and LSD tests failed to distinguish any difference between the materials for the 1-day exposure because of the large variation among the the three SS 316 samples. If SS 316 is removed, the analysis shows both PVC and SS 304 to contribute significantly greater quantities of Cr to the ground water than do the control and PTFE. The only material that showed a consistent trend was SS 304 (Fig. 1c), which created increasing concentrations of Cr with time. Throughout the experiment there was no significant difference for Cr between the control and the PTFE well casing.

Lead

The first two exposure periods showed PVC to leach the greatest amount of Pb and to be significantly different from the control and PTFE. The two longest exposure periods showed that SS 304 leached the greatest amount of Pb to ground water; however, the levels observed in solution for SS 304 were only statistically different from the rest for the 40-day exposure period (Table 3c). The average levels obtained for both of the stainless steels and for PVC consistently exceeded 1% of the EPA drinking water quality standard (Fig. 1d).

The most distinctive trend was the decrease in Pb with increasing time of exposure for PVC (Fig. 1d). Both stainless steel well casings showed slight decreases in Pb levels after aqueous concentration maxima were obtained. The Pb that was initially released was resorbed by the PVC and stainless steel well casings. Throughout the experiment, there was no significant difference among the control, SS 316 and PTFE.

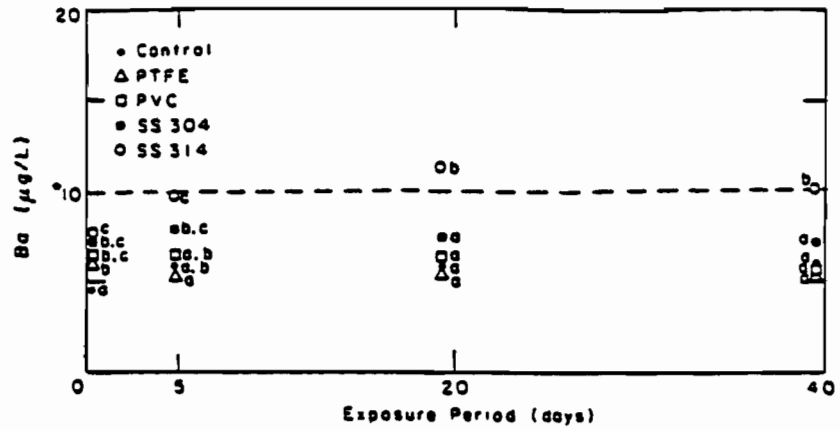

a. Ba.

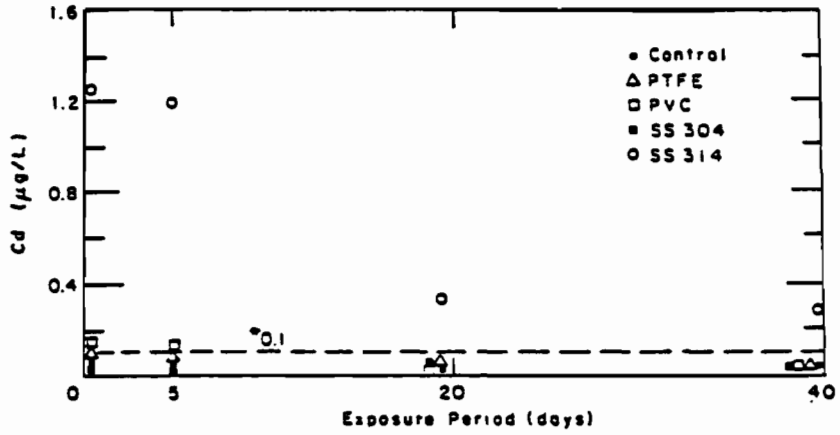

b. Cd.

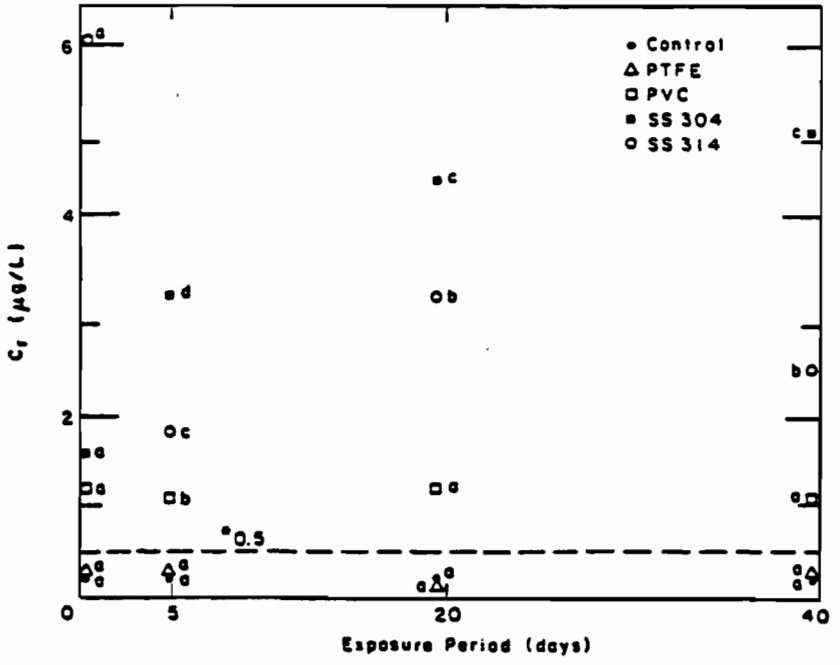

c. Cr.

Figure 1. Ground-water leaching of metals from well casings being examined. Common letters next to points denote no significant difference at the 0.05% confidence interval as determined by ANOVA and LSD.

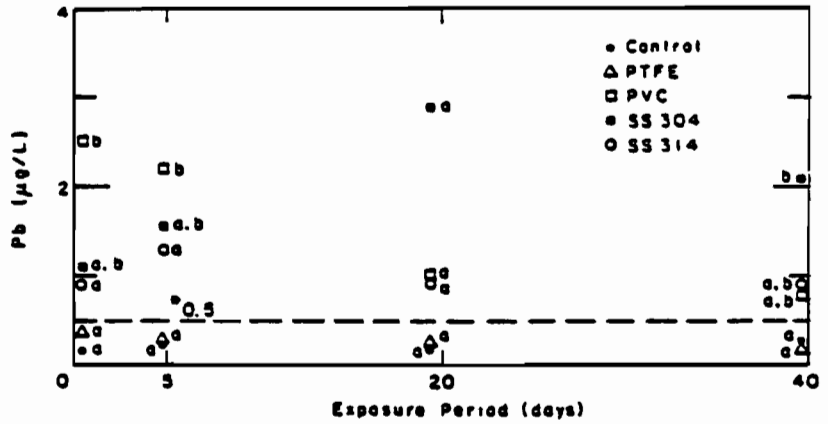

d. Pb.

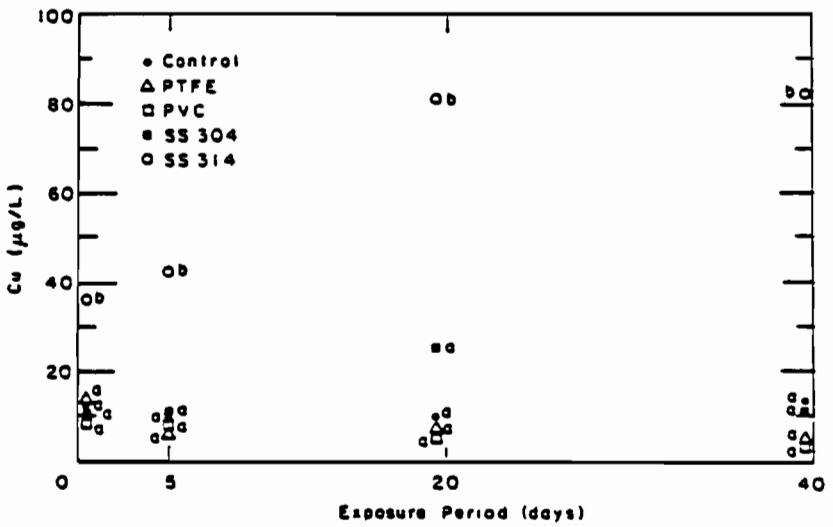

e. Cu.

Figure 1 (cont'd).

Copper

The statistical analysis distinguished SS 316 as the only material that contributed significantly more Cu when exposed to ground water than the other materials tested (Table 3d). Aqueous concentrations exceeded 80 µg/L for SS 316 versus about 10 µg/L for the other materials and the control.

Both PTFE and PVC well casing showed a general trend of decreasing Cu with increasing time of exposure and often showed concentrations below the control (Fig 1e). This trend, along with the lack of any trend with respect to the control, demonstrates that these two plastic pipes provided the substrate for sorption.

Arsenic, mercury, selenium and silver

The determinations for As, Hg, Se and Ag were not statistically analyzed because the majority of the concentrations were at or below the established MDLs. Based on the analysis methods employed, none of the well casings consistently contributed As, Hg or Ag above 1% or Se above 2% of the EPA drinking water quality level.

DISCUSSION

Ground water was collected from a domestic well system and stored in sealed 2-L glass bottles

for approximately 24 hours prior to being transferred into test jars. Ground water collected in this fashion is aerated at the faucet and exposed to an oxygen-rich environment every time the lid of the container is removed. Handling the ground water in this manner most likely changed the oxidation potential, facilitating oxidation reactions (Stumm and Morgan 1970). We made no attempt to simulate the natural ground-water redox state or to quantitatively assess the chemical equilibria that existed during the course of this experiment.

There was visible rust on 11 of 24 sections of the stainless steel pipes (Table 4). Each pipe section was carefully examined prior to submersion and after removal from the ground water. In this experiment and in a previous one (Hewitt 1989), oxidation on the stainless steel was predominantly found on the wall. If oxidation is providing sites for sorption or release mechanisms, then the freshly cut surfaces were most likely not a major factor in the behavior of these two materials. Fresh surfaces on the PVC pipe is not an experimental artifact since PVC well screen is made by slotting the pipe.

It was apparent from the values determined for the control samples that the three 2-L glass bottles used to transport the ground water had different concentrations of aqueous Cu (Appendix A). The range of aqueous Cu concentrations most likely reflect the residence time of the ground water in the household and well plumbing. Three distinct populations of Cu concentration were determined for the controls at the 99% confidence level (X_1 = 9.8±0.0, n = 4; X_2 = 10.3±0.22, n = 5; X_3 = 16.0±0.0, n = 3). Differences between adjacent mean concentrations were established by testing against the maximum variance determined for all of populations (i.e., X_1X_2 and X_2X_3).

The groups established by the three Cu populations were then tested to determine if any of the other metals found above its MDL were also significantly different. Table 5 presents the averages and standard deviations for the metal groups based on the Cu populations for the controls. Only Pb shows the same increasing mean concentration trend as the Cu groupings; however, the averages for the adjacent Pb groups were not significantly different at the 95% or even the 80% confidence level when analyzed in the same manner as the Cu populations. This analysis establishes that only Cu was significantly influenced by the sample preparation procedure. Mixing the ground water from the three collection bottles would have eliminated

Table 4. Physical state of stainless steel pipes after exposure to ground water.

	Section											
	1	2	3	4	5	6	7	8	9	10	11	12
SS 304	WR	WR	—	—	WR	—	WR	WR	ER	WR	WR	WR
SS 316	—	—	—	—	ER	—	—	—	—	—	—	ER

KEY: WR = rust on wall; ER = rust on edge; dash means no rust.

Table 5. Average metal concentrations for the controls based on the groups established by the Cu populations (µg/L).

Populations		*Cu*	*Cr*	*Pb*	*As*	*Ba*
1	Avg.	9.8*	0.22	0.11	0.55	5.2
	Std. Dev.	0.0	0.021	0.00	0.114	0.92
2	Avg.	10.3*	0.20	0.25	0.48	5.8
	Std. Dev.	0.19	0.032	0.154	0.00	0.29
3	Avg.	16.0*	0.22	0.28	0.48	5.6
	Std. Dev.	0.0	0.021	0.048	0.00	0.75

* Statistically different at the 99% confidence level.

Table 6. Summary of results.

	Ba	*Cd*	*Cr*	*Pb*	*Cu*
Materials that leached >1% of the EPA drinking water quality level in ground-water solutions.	SS 316 PVC	SS 316 PVC	SS 304 SS 316 PVC	SS 304 PVC SS 316	NA*
Material that showed the highest average overall amount of analyte leached	SS 316	SS 316	SS 304	SS 304	SS 316

* Does not apply.

this artifact. The level of Cu leached from the SS 316 far exceeded the difference between the established populations.

The results of this study support our previous work (Hewitt 1989) showing that PTFE is the least reactive material, whereas both PVC and stainless steel well casings influence aqueous concentrations of metals in laboratory ground-water solutions. As in the first study, the variance among the stainless steel replicates was often the greatest, indicating that this material is susceptible to producing random error. Both studies found that SS 316 and PVC leach and sorb Cd; in addition, these two materials, along with SS 304, sorb Pb. Studies in the future should be conducted under anoxic conditions to see if oxidation of the stainless steel is simply an artifact of these experiments. If corrosion of stainless steel is absent under reducing conditions, then we might expect less random variation and less of an influence on the metal analytes in ground-water solutions.

A summary of the results (Table 6) clearly shows that the stainless steels were the greatest sources of contamination under these experimental conditions. When PVC leached metals (Pb, Cr and Cd) that exceeded 1% of the EPA drinking water quality specifications into solution, there was always a trend showing a decrease in concentration with time of exposure. This would suggest that the leaching of Pb, Cr and Cd from PVC is a surface process and is small. Most likely the initial release could be decreased by more extensive cleaning before the pipes are used. The same statement does not apply to the stainless steel well casings. In the cases of leached Cu from SS 316 and leached Cr from SS 304, the concentrations of these metals continually increased with time over 40 days. It is possible that stainless steels could supply these analytes to ground water over an extended period of time, perhaps the entire life of the casing.

CONCLUSION

Among the four types of well casings tested, PTFE was the only material that did not leach any of the nine metals examined. The other materials tested in this experiment (PVC, SS 304 and SS 316) compromised laboratory ground-water samples by contributing analytes of interest (Ba, Cd, Cr, Pb and Cu). Investigations where only trace metals are of interest should use PTFE below the saturated zone. PVC would be the appropriate second choice since its influence on metal analytes appears predictable and small. In contrast, the two stainless steel materials should be avoided.

LITERATURE CITED

Barcelona, M.J. and J.A. Helfrich (1986) Well construction and purging effects on ground-water samples. *Environmental Science and Technology*, 20: 1179–1184

Chao, T.T., E.A. Jenne and L.M. Heppting (1968) Adsorption of traces of silver on sample containers. U.S. Geological Survey Professional Paper, 600-D, D13-D15.

Coyne, R.V. and J.A. Collins (1972) Loss of mercury from water during storage. *Analytical Chemistry*, 44: 1093–1096.

Cragin, J. (1979) Increased mercury contamination of distilled and natural waters samples caused by oxidizing preseratives. *Analytica Chimica Acta*, 110: 313–319.

Eichholz, G.G., A.E. Nagel and R.B. Hughes (1965) Adsorption of ions in dilute aqueous solutions on glass and plastic surfaces. *Analytical Chemistry*, 37: 867–867.

Federal Register (1984) Definition and procedure for the determination of the method detection limit. Code of Federal Regulations, Part 136, Appendix B, October 26.

Hatch, W.R. and W.L. Ott (1968) Determination of sub-microgram quantities of mercury by atomic absorption spectrophotometry. *Analytical Chemistry*, 40: 2085–2087.

Hewitt, A.D. (1989) Influence of well casing composition on trace metals in ground water. USA Cold Regions Research and Engineering Laboratory, Special Report 89-9.

Houghton, R.L. and M.E. Berger (1984) Effects of well-casing composition and sampling method on apparent quality of ground water. In: *The Fourth National Symposium and Exposition on Aquifer Restoration and Ground Water Monitoring*. Worthington, Ohio: National Water Well Association, p. 203–213.

Lo, J.M. and C.M. Wai (1975) Mercury loss from water during storage: mechanism and prevention. *Analytical Chemistry*, 47: 1869–1870.

Miller, G.D. (1982) Uptake and release of lead, chromium and trace level volatile organics exposed to synthetic well casing. *Proceedings, Second Annual Symposium on Aquifer Restoration and Ground Water Monitoring*. Worthington, Ohio: National Water Well Association, p. 236–245.

Parker, L.V., A.D. Hewitt and T.F. Jenkins (1988) Influence of well-casing materials on chemical species in ground water. *Proceedings of the 13th Annual Environmental Quality R&D Symposium*. U.S. Army Toxic and Hazardous Material Agency, p. 450–461.

Parker, L.V., T.F. Jenkins and P.B. Black (1989) Evaluation of four well casing materials for monitoring selected trace level organics in ground water. USA Cold Regions Research and Engineering Laboratory, CRREL Report 89-18.

Perkin-Elmer (1981) Analytical methods for furnace atomic absorption spectroscopy. Norwalk, Connecticut: The Perkin-Elmer Corporation, Part No. B010-0108.

Reynolds, G.W. and R.W. Gillham (1985) Absorption of halogenated organic compounds by polymer materials commonly used in ground-water monitors. *Proceedings of the Second Canadian/American Conference on Hydrogeology*, p. 125-132.

Subramanian, K.S., C.L. Chakrabarti, J.E. Sueiras, and I.S. Maines (1978) Preservation of some trace metals in samples of natural water. *Analytical Chemistry*, 50: 444–449.

Stumm, W. and J.J. Morgan (1970) *Aquatic Chemistry*. New York: Wiley-Interscience.

Tuncel, G. and O.Y. Atoman (1980) Design and evaluation of a new absorption cell for cold vapor mercury determination by atomic absorption spectrometry. *Atomic Spectroscopy*, 4: 126–128.

APPENDIX A: LEVELS OF CD, PB, CR, BA AND CU DETERMINED IN GROUND-WATER SOLUTIONS (~~MG~~ µg/L).

Pipe	Replicate	Time (days)	Number	Cd	Pb	Cr	Ba	Cu
Cntrl	1	1	1	< D*	0.11	0.21	4.2	9.8
Cntrl	2	1	2	< D	0.11	0.19	4.6	9.8
Cntrl	3	1	3	< D	0.26	0.21	4.8	16.0
Cntrl	1	5	4	< D	0.40	0.15	5.5	10.5
Cntrl	2	5	5	< D	0.11	0.24	5.8	9.8
Cntrl	3	5	6	< D	0.11	0.20	6.1	10.1
Cntrl	1	20	7	< D	0.11	0.24	6.1	10.1
Cntrl	2	20	8	< D	0.11	0.22	6.1	9.8
Cntrl	3	20	9	< D	0.19	0.20	5.5	10.5
Cntrl	1	40	10	< D	0.42	0.20	5.8	10.1
Cntrl	2	40	11	< D	0.24	0.20	5.7	16.0
Cntrl	3	40	12	< D	0.33	0.24	6.3	16.0
PTFE	1	1	1	< D	0.40	0.19	5.9	10.8
PTFE	2	1	2	< D	0.26	0.28	6.1	9.8
PTFE	3	1	3	< D	0.40	0.19	5.9	15.7
PTFE	1	5	4	0.117	0.40	0.24	4.9	9.1
PTFE	2	5	5	< D	0.30	0.21	5.5	8.4
PTFE	3	5	6	< D	0.11	0.21	5.5	5.9
PTFE	1	20	7	0.117	0.40	0.21	5.8	15.3
PTFE	2	20	8	< D	0.30	0.16	5.2	4.9
PTFE	3	20	9	< D	0.36	0.19	5.5	4.6
PTFE	1	40	10	< D	0.11	0.21	4.9	4.3
PTFE	2	40	11	< D	0.11	0.16	5.5	7.0
PTFE	3	40	12	< D	0.40	0.26	5.2	4.3
PVC	1	1	1	0.109	2.19	1.13	6.7	9.4
PVC	2	1	2	0.125	3.09	1.40	7.0	9.8
PVC	3	1	3	0.175	2.11	1.15	6.1	9.1
PVC	1	5	4	0.075	2.39	1.15	7.3	8.0
PVC	2	5	5	0.142	2.43	1.30	6.4	13.2
PVC	3	5	6	0.109	1.87	0.91	6.1	8.4
PVC	1	20	7	< D	2.11	1.30	6.4	11.9
PVC	2	20	8	< D	0.66	1.40	5.8	4.3
PVC	3	20	9	< D	0.34	0.91	6.1	4.3
PVC	1	40	10	< D	0.93	1.08	6.1	4.3
PVC	2	40	11	< D	0.75	1.03	5.2	4.3
PVC	3	40	12	< D	0.66	1.22	5.5	4.6
SS 304	1	1	1	< D	0.48	1.22	6.7	9.8
SS 304	2	1	2	< D	0.88	1.13	7.0	13.2
SS 304	3	1	3	< D	2.05	2.45	7.6	9.1
SS 304	1	5	4	< D	1.25	3.33	7.3	9.8
SS 304	2	5	5	< D	0.96	3.21	8.2	8.0
SS 304	3	5	6	< D	2.47	3.48	7.9	15.3
SS 304	1	20	7	0.092	0.80	4.36	7.3	9.1
SS 304	2	20	8	< D	2.81	3.87	7.6	49.7
SS 304	3	20	9	< D	4.98	5.59	7.3	19.6
SS 304	1	40	10	< D	2.97	5.10	6.7	9.1
SS 304	2	40	11	< D	1.47	4.56	6.4	9.4
SS 304	3	40	12	< D	1.73	5.73	7.9	15.9
SS 316	1	1	1	2.629	0.41	1.48	7.0	27.5
SS 316	2	1	2	0.209	0.60	1.29	7.3	35.5
SS 316	3	1	3	0.926	1.70	15.36	8.7	44.5
SS 316	1	5	4	0.217	0.96	1.81	8.5	37.2
SS 316	2	5	5	2.930	2.30	1.69	11.5	37.6
SS 316	3	5	6	0.451	0.55	1.86	9.6	52.9
SS 316	1	20	7	0.326	1.50	3.45	12.3	102.2
SS 316	2	20	8	0.376	0.76	2.96	9.3	56.7
SS 316	3	20	9	0.326	0.75	3.50	12.3	84.8
SS 316	1	40	10	0.267	0.67	3.18	11.5	97.3
SS 316	2	40	11	0.384	0.75	1.94	9.0	77.2
SS 316	3	40	12	0.209	2.36	2.45	9.8	72.3

* Less than MDL.

Reprinted from
the Spring 1990 Issue of *Ground Water Monitoring Review*

Vol 10(2) pp 146-156

Influence of Casing Materials on Trace-Level Chemicals in Well Water

by Louise V. Parker, Alan D. Hewitt, and Thomas F. Jenkins

Abstract

Four well casing materials — polyvinyl chloride (PVC), polytetrafluoroethylene (PTFE), and stainless steel 304 (SS 304) and 316 (SS 316) — were examined to determine their suitability for monitoring inorganic and organic constituents in well water.

The inorganic study used a factorial design to test the effect of concentration of mixed metals (arsenic [As], chromium [Cr], lead [Pb], and cadmium [Cd]), pH, and organic carbon. Sample times were 0.5, 4, 8, 24, and 72 hours. Except for slow loss of Pb, PTFE well casings had no significant effect on the concentration of metals in solution. For the other casings, changes in analyte concentration often exceeded 10 percent in eight hours or less and, thus, could bias analyses of samples taken from wells constructed with these materials. Specifically, PVC casings sorbed Pb and leached Cd; SS 316 casings sorbed As and Pb and leached Cd; and SS 304 casings sorbed As, Cr, and Pb and leached Cd. Both stainless steel casing materials showed markedly poorer performance than the PVC casings.

The well casings were also tested for sorption/desorption of 10 organic substances from the following classes: chlorinated alkenes, chlorinated aromatics, nitroaromatics and nitramines. Sample times were 0, 1, 8, 24, and 72 hours, seven days, and six weeks. There were no detectable losses of analytes in any of the sample solutions containing stainless steel well casings. Significant loss of some analytes was observed in sample solutions containing plastic casings, although losses were always more rapid with the PTFE casings than with PVC. Chlorinated organic substances were lost most rapidly. For samples containing PTFE casings, losses of some of these compounds were rapid enough (>10 percent in eight hours) to be of concern for ground water monitoring. Losses of hydrophobic organic constituents in samples containing PTFE casings were correlated with the compound's octanol/water partition coefficient.

Introduction

The U.S. Environmental Protection Agency's (EPA's) RCRA Ground Water Monitoring Technical Enforcement Guidance Document (TEGD) (U.S. EPA 1986a) states that only fluorocarbon resins or stainless steel (SS) casings should be used for monitoring volatile organics in the saturated zone. The original draft of this document (U.S. EPA 1985) suggested that Teflon® or stainless steel 304 be used for all ground water monitoring at RCRA sites. The EPA was concerned that many of the casing materials used for ground water monitoring could either affect the quality of the ground water or did not have the long-term structural characteristics required of RCRA monitoring wells. With respect to the EPA's first concern, a review of the literature published prior to 1986 did not reveal substantial evidence to support the position taken by the EPA in either edition of this document (Parker et al. 1989).

Few studies have specifically addressed the possible interactions between well casing materials and metal species. There is considerable evidence, however, that sorption of metals by plastic and glass containers can be significant (Eicholz et al. 1965, Robertson 1968, Batley and Gardner 1977, and Masse et al. 1981). In one study of PVC well casings, there was negligible loss of chromium but large losses of lead from a deionized water solution (Miller 1982). Other studies with Pyrex glass and polyethylene also found that lead was the most rapidly lost analyte (Shendrikar et al. 1976). Barcelona and Helfrich (1986) compared the concentrations of several metal species in samples taken from adjacent PVC, PTFE, and SS wells. They found increased levels of iron in water samples from the non-purged SS well to be the only statistically significant difference. In a previous in situ study by Houghton and Berger (1984), a steel-cased well appeared to leach a number of metal species, including iron, cadmium, chromium, copper, manganese, molybdenum, selenium, and zinc, when compared with a PVC well and one constructed of acrylonitrile-butadiene-styrene (ABS).

Sorption of organic solutes by well casing materials has been reported in several publications. Miller (1982) tested PVC well casing for sorption of trace levels (2-14 ppb) of six halogenated organic compounds (bromo-

form, trichlorofluoromethane, trichloroethylene, 1,1,1-trichloroethane, 1,1,2-trichloroethane, and tetrachloroethylene) in aqueous solution and found slow losses of tetrachloroethylene (25-50 percent in six weeks).

Reynolds and Gillham (1986) tested both PVC and PTFE materials for sorption of trace levels (ppb) of five halogenated organics. They found rapid sorption of tetrachloroethylene by PTFE, slow sorption of 1,1,1-trichloroethane, 1,1,2,2-tetrachloroethane and hexachloroethane, and no sorption of bromoform. They also found slow sorption of all the analytes except trichloroethane by PVC. While 50 percent of the tetrachloroethylene was sorbed by the PVC in five weeks, the same amount was sorbed by PTFE in only eight hours. They attributed loss of these organics to absorption and developed a model where uptake of the compound proceeds by sorption/dissolution into the polymer surface, followed by diffusion into the polymer matrix. However, Reynolds and Gilham (1986) could not predict which organic chemicals were most susceptible to absorption.

Sykes et al. (1986) compared sorption of several organics by PVC, SS, and PTFE well casings. The casing materials were equilibrated for seven days (5 C) in analyte solution, placed in fresh analyte solution, and then tested for losses due to sorption after one and 24 hours. After 24 hours they did not find any significant losses for any of the casing materials.

While these studies indicate that sorption of some organics may be a significant problem for plastic casings over the long term, only the study by Miller (1982) examined desorption during the first two weeks. In that study, he observed some desorption (25 percent) of the tetrachloroethylene that had been previously sorbed by the PVC casings.

Casing materials may also leach a variety of organic substances. In two studies (Miller 1982, Parker and Jenkins 1986), analytical interferences in leachates from PVC well casings were sought but none were found. Curran and Tomson (1983) also examined the leachates from five plastics, including PVC and PTFE. They found that PTFE leached the fewest contaminants and that non-glued PVC was a close second. While it is possible that organic substances such as lubricants used during manufacture or inks from printing could leach from stainless or plastic casings, no information currently available in the literature confirms this.

It is interesting to note that despite the literature that is available regarding sorption of organics by PTFE, articles have recently been published that claim it is superior for sampling organic substances (e.g., Bryden and Smith 1989).

The purpose of the studies conducted by the authors was to determine the suitability of four well casing materials (PVC, PTFE, SS304, and SS316) for monitoring inorganic and organic solutes in ground water. To do this, two separate studies were conducted, one for inorganics and one for organics.

General Comments on the Inorganic and Organic Studies

Two-inch (inner) diameter well casings manufactured specifically for ground water monitoring were used in all studies. These casings were purchased specifically for the studies and were stored in a cool, dry room prior to use. Precautions were taken while the casings were being cut to prevent contamination from grease, dirt, oil, solvents, and excessive handling. The ground water used in the studies was obtained from a domestic well (249 feet [76m] deep) in Weathersfield, Vermont. No attempt was made to maintain the native dissolved oxygen level. As a general guideline for evaluating our results, we considered any change in concentration (relative to the control samples) of 10 percent in an eight-hour period to be the maximum change tolerable.

Inorganic Study

Experimental

Mixed metal solutions were prepared by spiking ground water with arsenic (As), cadmium (Cd), chromium (Cr) and lead (Pb) at two concentrations: 50 and 100 μg/L (ppb) for As, Cr, and Pb, and 10 and 2 μg/L for Cd. The higher concentrations are the current maximum concentration limits set by the EPA for drinking water (U.S. EPA 1986b). Prior to treatment, the ground water used in this study was analyzed and found to contain no detectable amounts of any of these metals at the sensitivity levels used for analysis. To simulate a wider range of ground water conditions, the tests were run at the natural pH (7.8) of the well water plus a lower pH (5.8) and at two levels of organic carbon. HCl (reagent grade) was added to lower the pH and 5 mg/L (ppm) of humic acid was added to raise the organic carbon content. A complete (2^3) factorial experiment was used to test the effect of these treatments (concentration of metals, pH and organic carbon content) (Table 1).

Because the wall thicknesses varied between the plastic and the two stainless steel casings, the casings

TABLE 1
Matrix Design for Inorganic Study

Test Condition	Metal Concentrations[1]	pH	Organic Carbon Added[2]
1	high	7.8	no
2	high	7.8	yes
3	high	5.8	no
4	high	5.8	yes
5	low	7.8	no
6	low	7.8	yes
7	low	5.8	no
8	low	5.8	yes

[1] High metal concentrations were 50 μg/L As, Cr, Pb, and 10 μg/L Cd. Low metal concentrations were 10 μg/L As, Cr, Pb, and 2 μg/L Cd.
[2] 5 mg/L humic acid was added as a source of organic carbon.

were cut to different lengths so that the surface area of each was constant (80 cm^2). Cut sections were rinsed with deionized water and air-dried before use. Individual well casings were then placed in 125mL polypropylene jars containing 100mL of test solution; the ratio of casing surface area to aqueous volume was 0.82 cm^2/mL. Similar jars that contained the test solutions without any casings were used for control samples. The sample vessels were covered, stored at 24 C and kept from natural light. Duplicates were run for each combination of variables and each casing material.

Sample aliquots (2.5mL) were taken from each container after 0.5, 4, 8, 24, and 72 hours. The aliquots were placed in clean 7.5mL polyethylene vials and acidified to a pH of less than 1 with nitric acid to prevent sorption by the containers. Metal concentrations were obtained by graphite furnace atomic absorption spectroscopy (Perkin-Elmer, model 703 atomic absorption spectrophotometer coupled with a PE model 2200 heated graphite atomizer). The concentrations of metals given in this study were measured as total.

The metal concentrations were normalized by dividing the values obtained for sample solutions that contained well casings by the values found for equivalent controls. This allowed the results for both concentrations to be analyzed by a single analysis of variance (ANOVA). Thus, it was possible to simultaneously test for the effect of solute concentration, pH and organic carbon at each sample time for each casing material. If a casing exerted no influence on analyte concentration, the expected value would be 1.00. An increase in the ratio indicates that the well casing released metal into the solution, while a decrease in the ratio indicates that metal was sorbed by the casing.

Results and Discussions

Approximately half of the stainless steel casings showed signs of surface rust. In some cases (SS 316 at a low pH), sufficient oxidation occurred to form a hydrous iron oxide precipitate. This precipitate was never observed in the control samples or those with PVC or PTFE casings. While the authors realize that rusting of the stainless casings is very condition-specific, the test conditions should be generally representative of shallow wells. Also, it was noticed that the casings had rusted some during storage prior to any testing.

Table 2 gives the normalized mean values and standard deviations for each analyte, well casing and time.

TABLE 2
Normalized Mean Metal Values[1] for Samples as a Function of Time

		Arsenic		Cadmium		Chromium		Lead	
Time (hr)	Pipe	Mean Value	Standard Deviation	Mean Value	Standard Deviation	Mean Value	Standard Deviation	Mean Value	Standard Deviation
0.5	PVC	0.991 ±	0.038	1.01 ±	0.025	1.01 ±	0.018	0.999 ±	0.009
	PTFE	0.999 ±	0.050	1.01 ±	0.011	1.01 ±	0.007	1.00 ±	0.026
	SS304	0.997 ±	0.057	1.06 ±	0.036	1.01 ±	0.016	1.02 ±	0.008
	SS316	0.994 ±	0.040	1.04 ±	0.021	1.02 ±	0.015	1.01 ±	0.025
4.0	PVC	1.02 ±	0.045	1.13 ±	0.037	0.999 ±	0.013	0.889 ±	0.030
	PTFE	0.993 ±	0.052	1.03 ±	0.054	1.01 ±	0.011	0.974 ±	0.019
	SS304	0.978 ±	0.063	1.17 ±	0.15	0.957 ±	0.037	0.784 ±	0.035
	SS316	0.945 ±	0.060	1.24 ±	0.49	0.921 ±	0.052	0.803 ±	0.077
8.0	PVC	1.00 ±	0.045	1.15 ±	0.037	1.00 ±	0.014	0.893 ±	0.035
	PTFE	1.01 ±	0.098	1.03 ±	0.016	0.989 ±	0.019	0.985 ±	0.032
	SS304	0.962 ±	0.057	1.16 ±	0.14	0.972 ±	0.16	0.699 ±	0.031
	SS316	0.945 ±	0.068	1.30 ±	0.47	0.872 ±	0.10	0.804 ±	0.10
24.0	PVC	0.994 ±	0.064	1.16 ±	0.056	1.00 ±	0.016	0.808 ±	0.051
	PTFE	0.992 ±	0.054	1.03 ±	0.017	1.01 ±	0.024	0.951 ±	0.040
	SS304	0.894 ±	0.051	1.12 ±	0.12	1.03 ±	0.37	0.538 ±	0.042
	SS316	0.853 ±	0.080	1.36 ±	0.68	0.855 ±	0.11	0.793 ±	0.19
72.0	PVC	1.03 ±	0.046	1.14 ±	0.049	1.01 ±	0.018	0.743 ±	0.064
	PTFE	1.02 ±	0.045	1.02 ±	0.022	1.00 ±	0.013	0.899 ±	0.034
	SS304	0.891 ±	0.084	1.03 ±	0.14	1.03 ±	0.42	0.452 ±	0.061
	SS316	0.874 ±	0.083	1.25 ±	0.66	0.836 ±	0.099	0.720 ±	0.17

[1] $\frac{\text{(Concentration for samples with casing)}}{\text{(Concentration for control samples)}}$ = Normalized mean value

These normalized values are the mean of all the treatments (i.e., for both pHs, organic carbon content, and concentration).

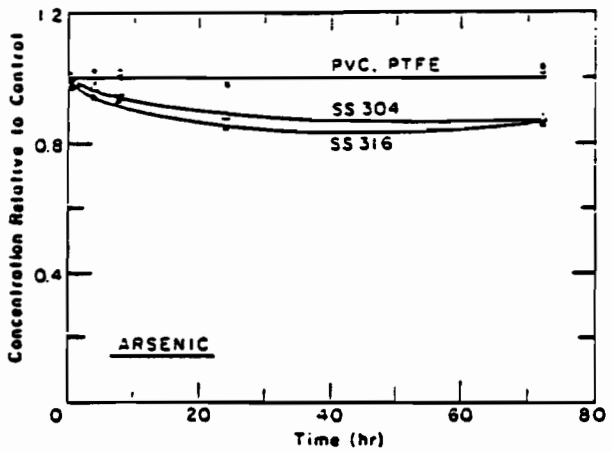

Figure 1. Trends in mean arsenic concentration for four well casing materials.

In general, there was no change in arsenic concentration for the sample solutions containing either the PVC or PTFE casings during the 72-hour test period (Figure 1), and no consistent pattern of effects was evident from the ANOVA. The reason As did not interact with these casings may be because As exists in natural waters in the anionic form (Fowler et al. 1979). Masse et al. (1981) found that anions do not strongly associate with plastic (polyethylene and PTFE) surfaces, which are known for their cation exchange capacity. The samples containing the stainless steel casings, on the other hand, showed a 10 percent decrease in aqueous arsenic concentration relative to the controls after 24 hours (Figure 1). It appears that there was no further loss of this analyte after 24 hours. Although these results cannot be used to predict exactly what losses might occur under field conditions, it is doubtful that this loss was rapid enough to impact water quality measurements (losses were less than 10 percent after eight hours).

The results for Cd are quite different. After only four hours, Cd concentrations in the samples containing PVC and stainless steel casings had increased by more than 10 percent (Figure 2), with the most leaching occurring in the samples containing the SS 316 casings. Cadmium may have been added to the PVC as a UV stabilizer (Wilson et al. 1982), and may have been added to the stainless steel to enhance resistance to chloride cracking (Sedricks 1979). The concentration of Cd in the samples containing PVC casings leveled off after eight hours. ANOVA revealed that pH had a significant effect (at the 95 percent confidence level) for this casing. Although the same amount of Cd leached in all the samples (approximately 0.5 mg/L), concentration was also significant (at the 95 percent confidence level), but only because relatively more was leached in the low-concentration samples. Concentrations in samples containing SS 304 casings decreased after eight hours and after 72 hours had returned to the same levels that were found in the control samples. Again, more Cd leached in the low pH samples. Cd was leached most rapidly in samples containing SS 316 casings. There was a large discrepancy between duplicate treatments for the samples that contained stainless steel casings. With the exception of the first set of samples (t = 0.5 hr), the relative standard deviations ranged from 12 to 15 percent for samples containing SS 304 and from 47 to 68 percent for those containing SS 316. In contrast, the standard deviations for samples containing PVC and PTFE casings were consistently below 6 percent. Because the variance in the samples containing SS 316 was so large, there was no consistent detectable effect of pH for these casings. However, surface oxidation appeared to be the major source of this variance. With respect to the leaching of metal stabilizers from PVC pipes, the literature indicates that loss can be a surface phenomenon that can be reduced or eliminated by either washing (with detergent) or soaking in dilute mineral acid before use (Packham 1971). It may be that the loss of Cd from PVC casings can also be reduced by a similar treatment, although we did not test this possibility.

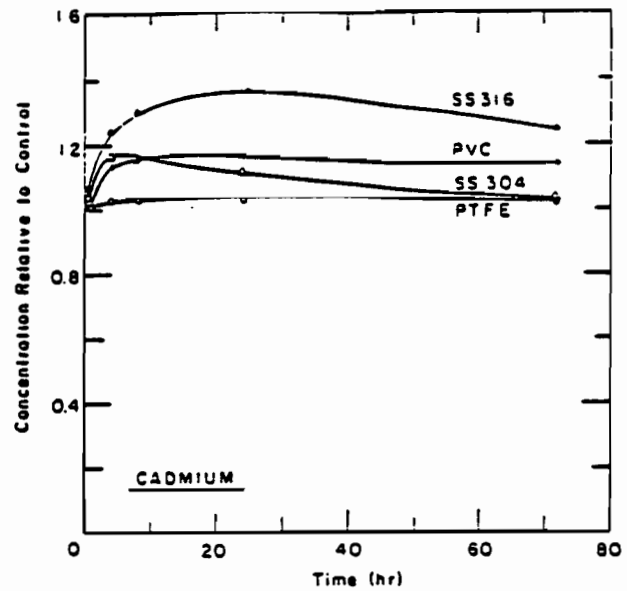

Figure 2. Trends in mean cadmium concentration for four well casing materials.

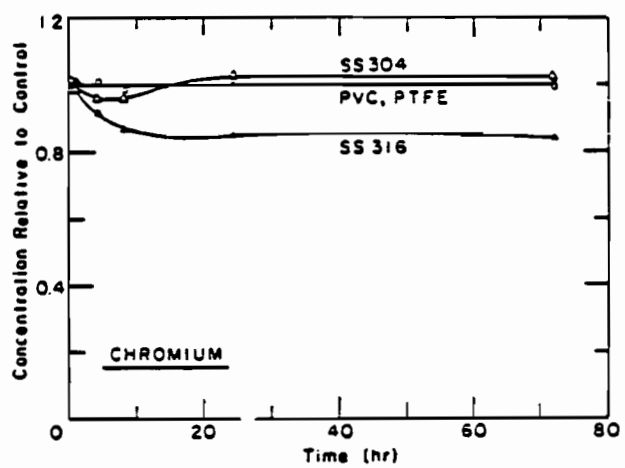

Figure 3. Trends in mean chromium concentration for four well casing materials.

There was no measurable sorption of chromium by the PTFE, PVC, and SS 304 casings (Figure 3). Absence

TABLE 3
Normalized[1] Average Concentrations of Organic Analytes for the Four Well Casings with Time

Analyte	Treatment	1 Hour	8 Hours	24 Hours	72 Hours	168 Hours	1000 Hours
RDX	PTFE	1.03	1.00	1.00	1.02	0.91	0.99
	PVC	1.01	1.00	0.98	1.00	1.02	1.00
	SS304	0.99	0.99	1.01	1.02	1.10	0.98
	SS316	1.01	0.99	1.01	1.02	1.11	1.00
TNB	PTFE	1.01	1.00	1.00	0.98	0.95	1.01
	PVC	1.01	1.00	0.98	1.02	1.01	1.02
	SS304	0.99	1.00	1.00	1.05	1.07	1.00
	SS316	1.02	0.99	1.01	1.07	1.06	1.02
C12DCE	PTFE	1.01	0.96*	0.96*	0.94	0.91*	0.79*
	PVC	1.00	0.99	0.95*	0.96	0.95	0.90
	SS304	0.97	1.00	1.00	0.96	1.04	0.98
	SS316	0.95	0.99	1.00	1.01	0.98	0.99
T12DCE	PTFE	1.00	0.92*	0.88*	0.83	0.66	0.56*
	PVC	1.00	0.98	0.93*	1.06	0.83	0.83
	SS304	0.95*	1.00	1.00	0.96	1.11	1.00
	SS316	1.00	0.99	1.00	1.12	1.03	1.00
MNT	PTFE	1.03	1.00	0.99	0.99	0.90	0.90*
	PVC	1.02	1.00	0.98	1.05	0.99	0.94
	SS304	1.00	1.00	1.01	1.00	1.08	1.07
	SS316	1.02	1.00	1.02	1.08	1.10	0.99
TCE	PTFE	1.00	0.90*	0.85*	0.78*	0.64*	0.40*
	PVE	1.01	0.98	0.94*	0.99	0.94*	0.88*
	SS304	0.96	1.00	1.01	0.96	1.04	0.99
	SS316	1.00	0.99	1.00	1.04	0.98	1.00
CLB	PTFE	1.01	0.93*	0.90*	0.85*	0.74*	0.51*
	PVC	1.01	0.98	0.95*	0.98	0.94*	0.86*
	SS304	0.98	1.00	1.00	0.97	1.05	0.99
	SS316	0.99	0.99	1.01	1.04	0.98	0.99
ODCB	PTFE	1.01	0.91*	0.88*	0.81*	0.68*	0.43*
	PVC	1.02	0.97*	0.94*	0.98	0.93	0.86*
	SS304	0.98	0.99	1.00	0.99	1.04	1.00
	SS316	1.01	0.98*	1.01	1.03	0.98	1.00
PDCB	PTFE	0.92*	0.84*	0.77*	0.64*	0.47*	0.26*
	PVC	0.95	0.95*	0.92*	0.97	0.88*	0.80*
	SS304	0.91*	0.98	1.00	0.98	1.02	1.02
	SS316	0.94	0.97*	1.00	1.04	0.97	1.02
MDCB	PTFE	1.00	0.84*	0.78*	0.66*	0.48*	0.26*
	PVC	1.02	0.95*	0.92*	0.97	0.88*	0.80*
	SS304	0.99	0.96*	1.00	0.99	1.02	1.02
	SS316	1.03	0.96*	1.00	1.04	0.96	1.01

[1] Values are determined by dividing the mean concentration of a given analyte at a given time and for a particular well casing by the mean concentration (for the same analyte) of the control samples taken at the same time.

* Values significantly different from control values ($\alpha = 0.05$)

of interaction with the plastic casings may be due to chromium speciation. In solution, chromium exists predominantly as dichromate and chromate ($Cr_2O_7^{2-}$, CrO_4^{2-}) and, as mentioned previously, anions are not as likely to exchange with plastic surfaces. However, loss of chromium was rapid enough (13 percent after eight hours) for SS 316 casing material to be of concern for ground water monitoring. Losses were greater at the higher pH: Cr speciation is known to be affected by pH and may be responsible for some of these differences. Surface oxidation was greater at the lower pH, which likely contributed to the larger variability. Also, for those samples where a hydrous iron oxide precipitate was formed, co-precipitation may have contributed to the losses from solution. Again, the standard deviations were considerably greater for the samples containing the stainless steel casings. Humic acids apparently increased the stability of aqueous Cr, perhaps by acting as a complexing agent (Stumm and Morgan 1970s).

Lead was by far the most actively sorbed metal species. While all sample solutions containing casing materials showed some loss of Pb with time (Figure 4), PTFE was the least active surface and SS 304 was the most active. The losses for samples containing PTFE casings do not appear to be of concern with respect to ground water monitoring; losses were only 5 percent after 24 hours. However, losses for samples containing PVC and stainless casings are of concern; losses were 10 percent after only four hours in the samples containing PVC casings and 20 percent in those containing stainless casings. Although loss was initially rapid in samples containing SS 316 casings, it leveled off after eight hours. The standard deviation was higher for the samples containing SS 316 casings than for the other casings. For both stainless steel casings, there was less sorption of Pb at the lower pH where hydrogen ions may have competed for sorption sites. Added humic material apparently acted as a complexing agent in solution, making lead less prone to sorption. Concentration had no consistent effect.

Undoubtedly, there were shifts in the chemical equilibria of the well water solutions from the time the well water was collected until the end of the experiment. Ground water that is removed from an anoxic environment and exposed to oxygen-rich air may undergo redox and precipitation reactions (Stumm and Morgan 1970b). Also, lowering the pH shifts the carbonate equilibrium in solution from predominantly bicarbonate species toward carbon dioxide (Manahan 1972) and causes shifts in Cr speciation. Clearly, such changes would alter the trace metal species distribution. These possible changes were not monitored in this experiment.

For further details on this portion of the study, refer to Hewitt (1989).

Organic Study

Experimental

The four well casing materials were also tested for sorption/desorption of low levels of 10 organic substances. The substances tested were hexahydro-1,3,5-trinitro-1,3,5-triazine (RDX), 1,3,5-trinitrobenzene (TNB), cis- and trans-1,2-dichloroethylene (CDCE and TDCE), m-nitrotoluene (MNT), trichloroethylene (TCE), chlorobenzene (CLB), and o-, p- and m-dichlorobenzene (ODCB, PDCB, MDCB). The criteria used for selecting these analytes included being an EPA priority pollutant, molecular structure, solubility in water, K_{ow} value, and retention time (using reversed-phase high performance liquid chromatography [HPLC] analysis). HPLC analysis of the ground water used in these studies revealed no detectable levels of any of these substances.

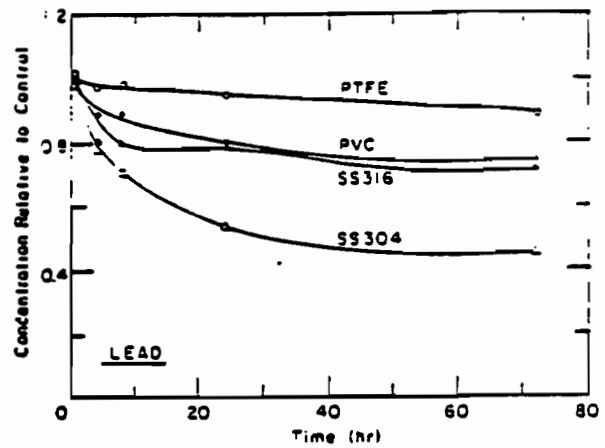

Figure 4. Trends in mean lead concentration for four well casing materials.

For these experiments, casings were cut into 11- to 14mm-long sections, which were then cut into quarters. Again, the length was varied so that the surface area could be maintained constant. The casings were washed in solutions of detergent and deionized water, rinsed many times with deionized water, drained and left to air dry. Two pieces of each type of casing were placed in 40mL glass vials that were filled with the aqueous test solution so there was no head space, and capped with Teflon-lined plastic caps. Vials with test solution but no well casing material served as controls. These controls allowed us to eliminate any effects such as those that might be due to the vials or caps. The ratio of casing surface area to solution volume was 0.79 cm^2/mL. The ratio of solution volume to volume of casing material was approximately 10:1.

In the first experiment, the test solution was prepared by adding known amounts of each of the organic solutes directly to 2.2 L of well water in a glass-stoppered bottle, which was stirred overnight. The final concentration was approximately 2 mg/L for each organic constituent. The solution also contained 40 mg/L of $HgCl_2$, which was added to prevent biodegradation of the organics. Separate vials were prepared for each sample time so that the test solution could be discarded after sampling; there were three replicate samples for each material and time. Contact times were 0 hours, one hour, eight hours, 24 hours, 72 hours (three days), 168 hours (seven days), and approximately 1000 hours (six weeks).

After an aliquot was removed for analysis from each

of the 1000-hour samples, the vials were emptied and the pieces of casing were rinsed with approximately 40mL of fresh well water to remove any residual solution adhering to the surfaces. The casing pieces were then placed in new vials, and fresh unspiked well water was added. The vials were capped with new caps and allowed to equilibrate for three days. Aliquots were then taken from these samples and analyzed to determine if desorption had occurred.

In the second experiment 2.0 g/L of NaCl was also added to the test solution to determine the effect of increased ionic strength on the rates of sorption. Sampling times were the same except that the last samples were taken after approximately 1200 hours (seven weeks).

All analytical determinations were made by reversed-phase high performance liquid chromatography. A modular system was employed that consisted of a Spectra Physics SP 8810 isocratic pump, a Dynatech LC-241 autosampler with a 100-μL loop injector, a Spectra-Physics SP8490 variable wavelength UV detector set at 210 nm, a Hewlett-Packard 3393A digital integrator, and a Linear model 555 strip chart recorder. Separations were obtained on a 25cm x 4.6mm (5 μm) LC-18 column (Supelco) eluted with 1.5 mL/min of 62/38 (v/v) methanol-water. Baseline separation was achieved for all 10 analytes. Detector response was obtained from the digital integrator operating in the peak height mode. Analytical precision ranged from 0.4 to 3.98 percent, as determined by the pooled standard deviation of triplicate initial measurements.

For each analyte and sample time, a one-way analysis of variance (ANOVA) was performed to determine if the well casing material had a significant effect on analyte concentration. Where significant differences were found, Duncan's multiple range test was performed to determine which samples were significantly different from the controls.

Before the two experiments described previously were performed, a preliminary leaching study was conducted to determine if any substances that could interfere with the analytical determinations leached from the casing materials. For this study, two pieces of each type of well casing were placed in each of two vials. The vials were filled with fresh well water so that there was no headspace, capped and allowed to sit for one week. An aliquot was taken from each vial and analyzed. No detectable peaks were observed in any of the samples.

Results and Discussion

The data for the first experiment are summarized in Table 3, where the normalized concentrations for solutions containing well casings are given as a function of time. Neither type of stainless steel casing affected the concentrations of any of the analytes in solution. However, significant loss of solute did occur in the solutions that contained plastic casings. While the rate of loss differed dramatically from analyte to analyte, losses were always greater for PTFE than PVC.

For RDX and TNB there was no loss of analyte from solutions containing either plastic casing, even after 1000 hours. There was some loss of MNT in the sample solutions that contained PTFE casings but the loss only became significant after 1000 hours (10 percent loss); there was no loss with the PVC casings. TDCE was lost much more readily in samples containing PTFE casings than was its isomer pair, CDCE (Figure 5). (The solid lines shown in this figure and Figures 6-9 were fitted manually.) Figure 6 shows the losses of TCE for the four well casings. Figure 7 shows the rate of loss of the three DCB isomers and CLB in the samples that contained PTFE casings. The order of loss was PDCB and MDCB > ODCB > CLB. While the rate of loss did not exceed 10 percent in eight hours for any of the previous solutes, it is noted that losses of PDCB and MDCB were 16 percent in eight hours and thus were rapid enough to be of concern with respect to ground

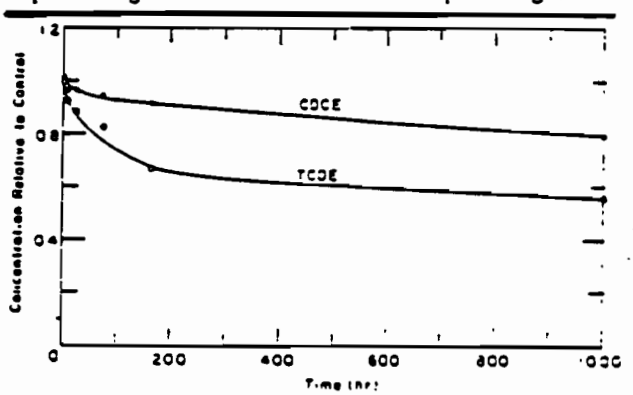

Figure 5. Sorption of CDCE and TDCE by PTFE well casings.

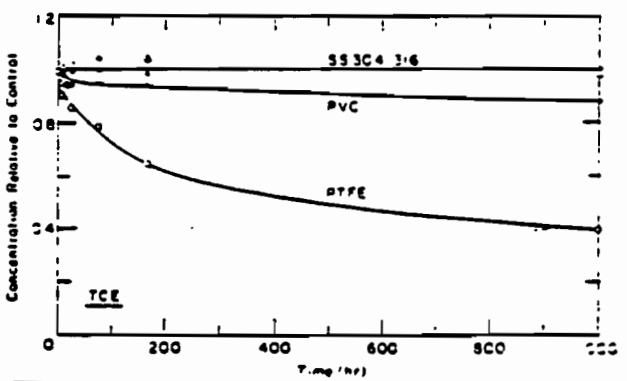

Figure 6. Sorption of TCE by the four well casing materials.

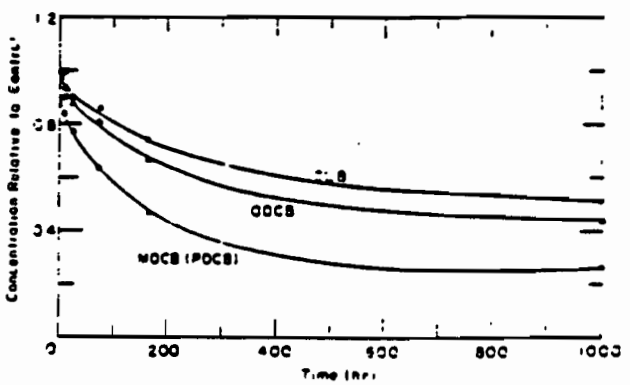

Figure 7. Sorption of CLB, ODCB, MDCB and PDCB by PTFE well casings.

TABLE 4
Results of Desorption Study

	Concentration in mg/L after three days equilibration									
Casing Material	RDX	TNB	CDCE	TDCE	MNT	TCE	CLB	ODCB	PDCB	MDCB
Teflon	ND	ND	0.20	0.43	0.075	0.47	0.28	0.38	0.30	0.35
	ND	ND	0.21	0.45	0.076	0.48	0.28	0.35	0.34	0.36
	ND	ND	*	*	0.074	*	*	*	*	*
PVC	ND	ND	0.079	0.15	0.046	0.14	0.10	0.15	0.17	0.18
	ND	ND	0.080	0.14	0.046	0.14	0.10	0.15	0.16	0.21
	ND	ND	0.080	0.15	0.043	0.13	0.11	0.16	0.16	0.20

* Results not presented because of additional loss of volatiles, probably resulting from a loose cap on this vial.
ND = Not detected.

water monitoring. For PVC, losses never reached 10 percent in eight hours for any of the organics tested, and thus the authors believe that PVC is clearly superior to PTFE for wells where water samples will be analyzed for organic constituents.

To determine if the loss of organic solutes was reversible, the pieces of casing that had been exposed to test solution for 1000 hours were rinsed and then exposed to fresh well water for three days. Measurable quantities of all the organics were recovered where significant losses had been observed (Table 4). Thus, loss was due to sorption and was at least partially reversible. Although this experiment did not give us information on the kinetics of desorption, the amount of analyte desorbed after three days generally paralleled the amount sorbed. However, PDCB and MDCB were sorbed to the greatest extent while TCE and TDCE were desorbed to the greatest extent. Therefore, it may be that diffusion out of the polymer is more rapid for smaller molecules.

In the second experiment NaCl was added to raise the chloride concentration above 1000 mg/L. High chloride concentrations are known to corrode 304 stainless steel. Specifically, tests were performed to determine if rusting would alter the sorptivity of the stainless steel surfaces. It is also possible that sorption on plastic materials would change with increasing ionic strength of the test solution.

While addition of NaCl caused rapid rusting of both stainless steel casings (<24 hr), it did not cause sorption of any of the organic solutes by them. In addition, the increased ionic strength had no detectable effect on the rate of sorption by either plastic casing (for example, Figures 8 and 9). These two figures also demonstrate the excellent reproducibility of the results from these two experiments.

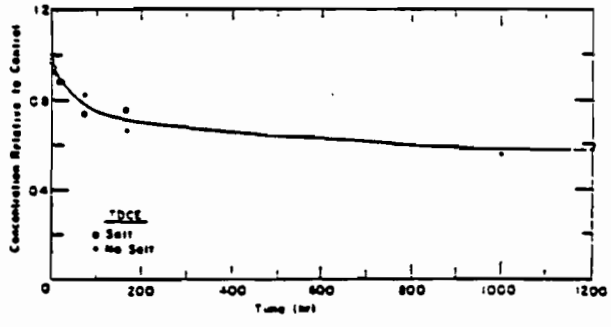

Figure 8. Sorption of TDCE by PTFE well casings in the presence and absence of salt.

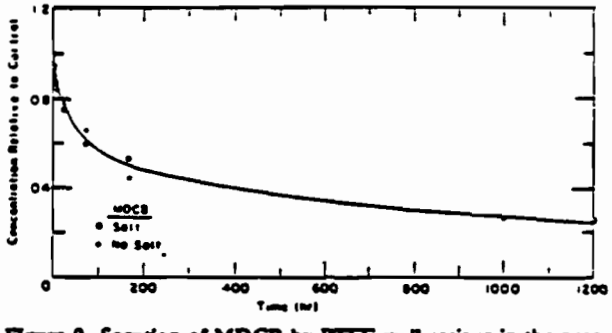

Figure 9. Sorption of MDCB by PTFE well casings in the presence and absence of salt.

Modeling the Sorption Process

These organic studies clearly demonstrated that the loss of organic chemicals from solutions exposed to plastic casing materials is via some reversible sorption process. However, it was uncertain whether this loss was due to sorption on the surface or whether there was penetration into the polymer matrix. The rate of sorption was found to be slow, with no established equilibrium after hundreds of hours. One explanation for this slow rate was that penetration into the polymer was occurring, with the rate controlled by slow diffusion within the bulk polymer and/or the rate of penetration into the small pores on the polymer surface. If it is assumed that this is the case, the process can be kinetically modeled by treating the plastic casing as an immiscible liquid phase in contact with water and relating the degree of partitioning for individual analytes to their octanol/water partition coefficients (K_{ow}). While there are immiscible liquids other than octanol that are better structural models for PTFE or PVC, the most extensive collection of partition coefficients is available for octanol.

If it is assumed that sorption is a reversible process,

$$A_w \underset{k_2}{\overset{k_1}{\rightleftharpoons}} A_s \quad (1)$$

and is first order in both directions, then the rate equation can be written as (Gould 1959):

$$\frac{d[A_w]}{dt} = -k_1 [A_w] + k_2 [A_s] \quad (2)$$

where $[A_w]$ is the concentration of solute A in aqueous solution, $[A_s]$ is the concentration of solute A in the plastic casing material, and k_1 and k_2 are the first-order rate constants for sorption and desorption, respectively.

Integration of the rate equation results in a non-linear relationship for A_w as a function of time t and two constants a and b (Equation 3), where a and b are defined in Equations 4 and 5:

$$\frac{\ln (a[A_w] + b)}{a} = t \quad (3)$$

$$a = k_1 + k_2 \quad (4)$$

$$b = 10k_2 [A_o] \quad (5)$$

where A_o is the initial concentration of solute A in aqueous solution.

Optimal values for a and b were obtained for each solute exposed to PTFE by application of the Gauss-Newton method of non-linear curve fitting using the measured concentrations at 1, 8, 24, 72, 128, and 1000 hours (Parker et al. 1989). Using determined values for a and b, the authors simultaneously solved Equations 4 and 5 for each solute to obtain estimates of k_1 and k_2. Because the process described is assumed to be reversible and first order, the ratio of the rate constants, k_1/k_2, is the equilibrium constant, K_{eq}.

When the eight values of K_{eq} were plotted vs. Log K_{ow}, six of the eight points appeared to fall on a straight line, while the points for MNT and ODCB did not (Figure 10). The poor fit for MNT and the lack of significant sorption for TNB and RDX can be explained by the tendency of nitro-containing organic molecules to form strong hydrogen bonds, which keeps them in solution. While octanol can be a donor in hydrogen bonding, PTFE cannot. Thus, if the authors predict partitioning into PTFE for these molecules based on their octanol/water coefficients, the amount of sorption for these types of compounds will be overestimated.

The poor prediction for ODCB can be explained by the well-documented "ortho effect," which is a complex combination of electronic and steric interactions that often results in ortho di-substituted aromatic molecules behaving much differently than the meta- and para-isomers.

A similar model predicting the loss of analyte for PVC was not created because the percent sorbed was small when compared with the experimental error and this would produce an unacceptable degree of uncertainty in the calculated rate constants.

Therefore, it is concluded that for hydrophobic organic molecules that are not subject to hydrogen bonding, the relationship presented in Figure 10 can be used to estimate the equilibrium partitioning of an analyte between the aqueous phase and PTFE. It is expected that losses in new wells would occur for some time until equilibrium with the water is achieved.

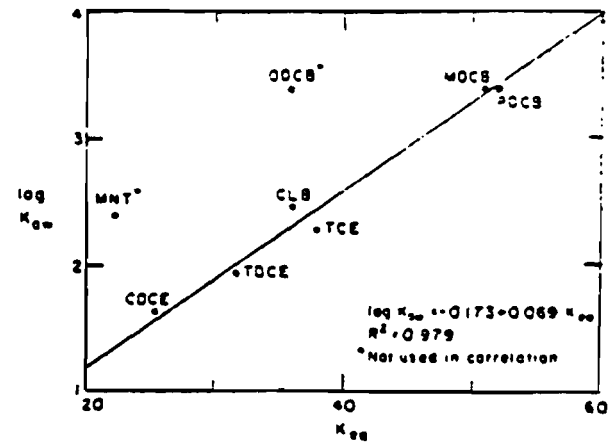

Figure 10. Correlation between log K_{ow} and K_{eq} for solutes exposed to PTFE casings.

While K_{eq} will determine the equilibrium concentrations of each analyte in the water and plastic phases, it is the magnitude of k_1 that will determine how quickly various analytes are depleted. For small, planar molecules like TCE, the k_1 values are quite high compared to the other analytes. This may explain the rapid loss of tetrachloroethylene from solutions containing PTFE casings observed by Miller (1982) and Reynolds and Gillham (1986).

Because the rate of sorption appears to be first order, the relative concentration (concentration at a given time relative to its initial concentration) is independent of initial concentration (Castellan 1964). Thus, the percent loss at a given exposure time is expected to be independent of concentration, as was also predicted by the model of Reynolds and Gillham (1986). We did not confirm this, however, by conducting the test at several concentrations.

For further details on the organic portion of this study, refer to Parker et al. (1989).

Summary and Conclusions

In summary, the inorganic study indicated that three of the metals (As, Cr and Pb) were sorbed by one or more of the casing materials. Specifically, Cr was sorbed by SS 316 casings, As was sorbed by both 304 and 316 stainless steel casings, and Pb was sorbed by all four casings. On the other hand, Cd leached from the stainless steel and PVC casings, although subsequent sorption lowered concentrations in the samples containing stainless steel casings. While sorption of As was slow enough that it is probably not of concern for ground water monitoring, the changes in the Cr, Cd and Pb concentrations are of concern. Both SS 304 and 316 casings were subject to surface oxidation, presumably by galvanic action, which apparently provided active sites for sorption and release of major and minor constitu-

ents. Sorption and leaching of metal species was affected in some cases by the ground water composition (pH and organic carbon content). Specifically, there was more leaching of Cd and less sorption of Pb at the lower pH. Our results indicate that humic material may have acted as a complexing agent, making lead and chromium less prone to sorption. If chemical interactions are used as the only criterion, PTFE is clearly the best candidate for monitoring metal species in ground water. PVC would be a good second choice because its performance was considerably better than either SS 304 or SS 316 casing.

In contrast, the organic studies clearly indicated that PTFE was the poorest choice of the four well casing materials tested. PTFE casings sorbed all the chlorinated compounds and one nitroaromatic compound, and losses of PDCB and MDCB were rapid enough to be of concern for ground water monitoring. PVC casings also sorbed some of the same compounds, but always at rates that were considerably slower than those observed for PTFE casings. The rates of these losses on PVC were slow enough that they did not appear to be of concern for ground water monitoring. There was no loss of any of the organic solutes in the presence of either type of SS casing.

The desorption study showed that the loss of organics from aqueous solution is due to a sorption process that was reversible, or at least partially so. Desorption from contaminated casings could potentially result in falsely high concentrations of analytes if the concentrations of the analytes in the ground water were to drop.

The loss of hydrophobic organic constituents in the samples containing PTFE casings could be correlated with the substance's K_{ow} values. However, this correlation overestimates losses for hydrophilic organic substances.

There are several effects that make extrapolating these test data to a real monitoring situation difficult:

- Casings were tested and not well screens. The rate of sorption could be substantially greater in the screened portions of the well because the surface area of the screened portion would be greater.
- This experiment was conducted under static conditions. The effect of sorption under real conditions would be mitigated to some degree, depending on the rate of exchange of water between the aquifer and well casing.

Clearly, choosing one casing material for samples that will be analyzed for both trace metals and organics involves compromise. However, based on the results of the tests that the authors have performed to date, PVC appears to be the best compromise choice of the four casing materials tested.

Future studies will examine leaching of inorganic and organic solutes, the effect of low dissolved oxygen on interactions between the metals and well casings, and the suitability of other materials for ground water monitoring.

Acknowledgments

Funding for this work was provided by the U.S. Army Toxic and Hazardous Materials Agency, Martin H. Stutz, Project Monitor. The authors also wish to thank Robert Forest and Dennis Lambert, CRREL, for their care and diligence in cutting the casings for the organic studies, and Dr. Clarence Grant (professor emeritus, University of New Hampshire), John Sanda (staff geologist, Office of the Chief of the U.S. Army Corps of Engineers), and Dr. C.M. Reynolds (soil scientist with the authors' laboratory), for their useful comments on our manuscript. Special thanks are given to Dr. Patrick Black, CRREL, for his assistance with the mathematical analysis.

References

Barcelona, M.J. and J.A. Helfrich. 1986. Well construction and purging effects on ground-water samples. *Environmental Science and Technology*, v. 20, pp. 1179-1184.

Batley, G.E. and D. Gardner. 1977. Sampling and storage of natural waters for trace metal analysis. *Water Research*, v. 11, pp. 745-756.

Bryden, G.W. and L.R. Smith. 1989. Sampling for environmental analysis, Part 1: Planning and preparation. *American Laboratory*, July 1989, pp. 30-39.

Castellan, G.W. 1964. *Physical Chemistry*. Addison-Wesley Publishing Company Inc., Reading, Massachusetts, p. 603.

Curran, C.M. and M.B. Tomson. 1983. Leaching of trace organics into water from five common plastics. *Ground Water Monitoring Review*, v. 3, pp. 68-71.

Eicholz, G.G., A.E. Nagel and R.B. Hughes. 1965. Adsorption of ions in dilute aqueous solutions on glass and plastic surfaces. *Analytical Chemistry*, v. 37, pp. 863-868.

Fowler, B.A., R.S. Braman, K.Y. Chen, P.A. Gilderhus, P.V. Hodson, M. Katz, J.C. Kent, L.L. King, J.M. McKim, L.W. Nicholson, D.R.M. Passino, and W.R. Penrose. 1979. Arsenic. *A Review of the EPA Red Book: Quality Criteria for Water* (R.V. Thurston, R.C. Rosso, C.M. Fetteroff Jr., T.A. Edsall and Y.M. Baker Jr., eds.) Water Quality Section, American Fisheries Society, Bethesda, Maryland, pp. 19-33.

Gould, E.S. 1959. *Mechanism and Structure in Organic Chemistry*. Holt, Rinehart and Winston, New York, p. 167.

Hewitt, A.D. 1989. Influence of Well Casing Composition on Trace Metals In Ground Water. U.S. Army Cold Regions Research and Engineering Laboratory, Special Report 89-9, Hanover, N.H. 03755-1290.

Houghton, R.L. and M.E. Berger. 1984. Effects of well-casing composition and sampling method on apparent quality of ground water. In *Fourth National Symposium on Aquifer Restoration and Ground Water Monitoring*, May 23-25, pp. 203-213.

Manahan, S.E. 1972. Environmental Chemistry. Willard Grant Press, Boston, Massachusetts.

Masse, R., F.J.M.J. Maessen, and J.J.M. De Goeij. 1981.

Loss of silver, arsenic, cadmium, selenium and zinc traces from distilled water and artificial sea-water by sorption on various container surfaces. *Analytica Chimica Acta*, v. 127, pp. 181-193.

Miller, G.D. 1982. Uptake and release of lead, chromium, and trace level volatile organics exposed to synthetic well casings. In *Proceedings of the Second National Symposium on Aquifer Restoration and Ground Water Monitoring*, May 26-28, pp. 236-245.

Packham, R.F. 1971. The leaching of toxic substances from unplasticized PVC water pipe: Part III—The measurement of extractable lead in PVC pipes. *Water Treatment and Examination*, v. 20, no. 2, pp. 152-164.

Parker, L.V. and T.F. Jenkins. 1986. Suitability of polyvinyl chloride well casings for monitoring munitions in ground water. *Ground Water Monitoring Review*, v. 6, no. 3, pp. 92-98.

Parker, L.V., T.F. Jenkins and P.B. Black. 1989. Evaluation of Four Well Casing Materials for Monitoring Selected Trace-Level Organics in Ground Water. U.S. Army Cold Regions Research and Engineering Laboratory, CRREL Report 89-18, Hanover, N.H. 03755-1290.

Reynolds, G.W. and R.W. Gillham. 1986. Adsorption of halogenated organic compounds by polymer materials commonly used in ground water monitors. In *Proceedings of the Second Canadian/American Conference on Hydrogeology, Banff, Alberta, Canada*, June 25-29, 1985. Published by the National Water Well Association, Dublin, Ohio.

Robertson, D.E. 1968. The adsorption of trace elements in sea water on various container surfaces. *Analytica Chimica Acta*, v. 42, pp. 533-536.

Sedriks, J.A. 1979. *Corrosion of Stainless Steels*. John Wiley and Sons Inc., New York, p. 146.

Shendrikar, A.D., V. Dharmarajan, H. Walker-Merrick, and P.W. West. 1976. Adsorption characteristics of traces of barium, beryllium, cadmium, manganese, lead and zinc on selected surfaces. *Analytica Chimica Acta*, v. 84, pp. 409-417.

Stumm, W. and J.J. Morgan. 1970a. *Aquatic Chemistry*. Wiley-Interscience, New York, pp. 238-299.

Stumm, W. and J.J. Morgan. 1970b. *Aquatic Chemistry*. Wiley-Interscience, New York, pp. 6-12.

Sykes, A.L., R.A. McAllister, and J.B. Homolya. 1986. Sorption of organics by monitoring well construction materials. *Ground Water Monitoring Review*, v. 6, no. 4, pp. 44-47.

U.S. Environmental Protection Agency. 1986a. RCRA Ground-Water Monitoring Technical Enforcement Guidance Document. U.S. Government Printing Office, Washington, DC 20402.

U.S. Environmental Protection Agency. 1986b. Quality Criteria for Water, 1986. Office of Water and Hazardous Materials, U.S. Environmental Protection Agency, Washington, DC.

Wilson, D.C., P.J. Young, B.C. Hudson and G. Baldwin. 1982. Leaching of cadmium from pigmented plastics in a landfill site. *Environmental Science and Technology*, v. 16, pp. 560-566.

Biographical Sketches

***Louise V. Parker** is a research physical scientist at the U.S. Army Cold Regions Research and Engineering Laboratory (CRREL) (72 Lyme Rd., Hanover, NH 03755-1290). She received her B.A. in microbiology from the University of New Hampshire and her M.S. in food microbiology from the Department of Food Science and Nutrition at the University of Massachusetts. Her research interests include environmental microbiology and chemistry. She is a member of the AGWSE and has been active in ASTM Subcommittee D18.21 on Ground Water and Vadose Zone Investigations.*

***Alan D. Hewitt** is also a research physical scientist at CRREL (72 Lyme Rd., Hanover, NH 03755-1290). He has a B.A. in chemistry from the University of New Hampshire and an M.S. in chemical oceanography from the University of Connecticut. His areas of interest are inorganic hazardous waste chemistry and the chemistry of ice and snow.*

***Thomas F. Jenkins** is a research chemist at CRREL (72 Lyme Rd., Hanover, NH 03755-1290). He received his B.S. in chemistry from the University of Missouri at St. Louis, his M.S. in chemistry at the University of Colorado, and his Ph.D. in chemistry at the University of New Hampshire. His research interest is environmental analytical chemistry.*

APPENDIX C

Appendix C

USEPA SOPs for Monitoring Well Installations

APPENDIX E
DESIGN AND INSTALLATION FOR PERMANENT MONITORING WELLS

E.1 INTRODUCTION

The design and installation of permanent monitoring wells involve the drilling of boreholes into various types of geologic formations that exhibit varying subsurface conditions. Designing and installing permanent monitoring wells in these geologic environments may require several different drilling methods and installation procedures. The selection of drilling methods and installation procedures shall be based on field data collected during a hydrogeologic site investigation and/or a search of existing data. Each permanent monitoring well shall be designed and installed to function properly throughout the entire anticipated life of the monitoring program. When designing monitoring wells the following questions shall be considered:

- What are the short- and long-term objectives?
- How long will the monitoring program last?
- What contaminants are to be monitored?
- What types of well construction materials are to be used?
- What kinds of analyses are needed?
- What are the surface and subsurface geologic conditions?
- What aquifer(s) is going to be monitored?
- Over what depth(s) will the well be screened?
- What is the anticipated total depth of the well?
- What are the general site conditions?
- What are the potential health and safety hazards?
- Are these wells going to serve more than one purpose (i.e., monitoring, pump test, extraction)?

Each of the previous questions can be expanded into many subtopics depending on the complexity of the project. In designing permanent monitoring wells, the most reliable obtainable data shall be utilized. Once the data have been assembled and the well design has been completed, a drilling method(s) has to be selected. The preferred drilling procedure for installing wells is the hollow-stem auger method. However, site conditions may not always be amenable to using the hollow-stem auger method. When this occurs, an alternate method shall be selected that will perform acceptably under the encountered site conditions. It is advisable to select several alternate methods and be prepared to use them if a field problem suddenly occurs that warrants a drilling change.

The following procedures for designing and installing monitoring wells cover the different aspects of selecting materials, drilling boreholes, and installing monitoring devices. This discussion is presented so that standard practices and procedures will be employed by all EPA staff and contractors who are associated with the design, drilling, and installation of permanent monitoring wells in Region IV.

E.2 DRILLING METHODS

The following drilling methods are listed in order of preference; however, final selection shall be based on actual site conditions.

E.2.1 Hollow-stem Auger

This type of auger consists of a hollow, steel stem or shaft with a continuous, spiralled steel flight, welded onto the exterior side of the stem, connected to an auger bit, which when rotated, transports cuttings to the surface. This method is best suited in soils that have a tendency to collapse when disturbed.

A monitoring well can be installed inside of hollow-stem augers with little or no concern for the caving potential of the soils and/or water table. However, retracting augers in caving sand conditions while installing monitoring wells can be extremely difficult or impossible since the augers have to be extracted without being rotated. If caving sands are encountered during monitoring well installations, a drilling rig must be used that has enough power to extract the augers from the borehole without rotating them. A bottom plug or pilot bit assembly can be fastened onto the bottom of the augers to keep out most of the soils and/or water that have a tendency to clog the bottom of the augers during drilling. Potable water (analyzed for contaminants of concern) may be poured into the augers (where applicable) to equalize pressure so that the inflow of formation materials and water will be held to a minimum when the bottom plug is released. Rubber "O" rings are normally furnished with new augers to make the augers water "tight"; however, rubber "O" rings are not acceptable for ESD drilling operations. Only Teflon® "O" rings are acceptable. Water-tight center plugs are not acceptable because they create suction when being extracted from the augers. This suction forces or pulls cuttings and formation materials into the augers, thus defeating the purpose of the centerplug. Auguring without a center plug or pilot bit assembly is permitted, provided that the soil plug which is formed in the bottom of the auger is removed when sampling or installing well casings. Removing the soil plug from the augers can be accomplished by washing out the plug using a side discharge rotary bit, or augering out the plug with a solid-stem auger bit sized to fit into the hollow-stem auger. The type of bottom plug or pilot bit assembly proposed for the drilling activity shall be approved by ESD prior to drilling operations. Boreholes can be augered to depths of 150 feet or more (depending on the auger size), but generally boreholes are augured to depths less than 100 feet.

E.2.2 Solid-stem Auger

This type of auger consists of a solid stem or shaft with a continuous spiralled steel flight, welded onto the stem, and connected to an auger bit. When rotated, cuttings are transported to the surface. This auger method is used in cohesive and semi-cohesive soils that do not have a tendency to collapse when disturbed. Boreholes can be augered to depths of 200 feet or more (depending on the auger size), but generally boreholes are augured to depths less than 150 feet.

Both of the previously discussed auger methods can be used in

unconsolidated soils and semi-consolidated (weathered rock) soils, but not in competent rock. Each method can be employed without introducing foreign materials into the borehole such as drilling fluids, thus minimizing the potential for cross-contamination. Minimizing the risk of potential cross contamination is one of the most important factors to consider when selecting the drilling method(s) for a project.

E.2.3 Rotary Method

This method consists of a drill pipe or drill stem coupled to a drilling bit that rotates and cuts through the soils. The cuttings produced from the rotation of the drilling bit are transported to the surface by drilling fluids which generally consist of water, drilling mud, or air. The water, drilling mud, or air is pumped down through the drill pipe, and out through the bottom of the drilling bit. The cuttings are forced to the surface between the borehole wall and the drill pipe. The drilling fluids not only force the cuttings to the surface but also keeps the drilling bit cool. When considering this method, it is important to evaluate the potential for contamination when fluids and/or air are introduced into the borehole. If the rotary method is selected as one of the drilling methods, water rotary is the preferred method, followed by air rotary and mud rotary.

E.2.3.1 Water Rotary -- When using water rotary, potable water (that has been analyzed for contaminants of concern) shall be used. If potable water (or a higher quality water) is not available, then potable water will have to be transported to the site or an alternative drilling method must be selected. Water rotary is the preferred rotary method because potable water is the only fluid introduced into the borehole during drilling. Water does not clog the formation materials, thus reducing well development time. The potable water will, however, flow out into the surrounding formation materials (if permeable) and mix with the natural formation water. This mixing of the drilling water and the natural formation water should be evaluated when determining the drilling method. Generally, most of the drilling water will be recovered during well development.

E.2.3.2 Air Rotary -- When using air rotary, the air compressor shall have an in-line organic filter system to filter the air coming from the compressor. The organic filter system shall be regularly inspected to insure that the system is functioning properly. Air compressors that do not have in-line organic filter systems are not acceptable for air rotary drilling. A cyclone velocity dissipator or similar air containment system shall also be used to funnel the cuttings to one location instead of letting the cuttings blow uncontrolled out of the borehole. The conventional air rotary method does not control cuttings blowing out of the borehole, and is not acceptable unless the above mentioned cyclone velocity dissipator or similar containment system is employed. Any air rotary method that allows cuttings to blow uncontrolled out of the borehole and does not direct them to a discharge point with minimal disturbance shall not be acceptable. Air rotary that employs the dual-tube (reverse circulation) drilling system is acceptable since the cuttings are contained in the drill stems and blown to the surface through the cyclone velocity dissipator and to the ground with little surface disturbance.

E.2.3.3 Mud Rotary -- Mud rotary is the least preferred rotary method because contamination can be introduced into the borehole from the constituents in the drilling mud, and it is very difficult to remove the drilling mud from the borehole after drilling and during well development. The drilling mud can also carry contaminants from a contaminated zone to an uncontaminated zone, thereby cross-contaminating the borehole. If mud rotary is selected, only potable water and pure (no additives) bentonite drilling muds shall be used. All materials used shall have adequate documentation as to manufacturer's recommendations and product constituents. The proper field QA/QC procedures shall be initiated before and during drilling to minimize the potential for contamination. These QA/QC procedures shall include, but not be limited to, sampling and analyzing of all drilling materials such as drilling muds, bentonite pellets, grouts, sand, etc., and the potable water to be used during drilling (Section E.9).

E.2.4 Other Methods

Other types of drilling procedures are also available, such as the cable-tool, the jetting method, and the boring (bucket auger) method. These methods are used in the installation of water and irrigation wells, but are not common methods for monitoring well installations. If these methods are selected for monitoring well installations, they shall be approved by a senior staff geologist or engineer before field work is initiated.

E.3 BOREHOLE REQUIREMENTS

E.3.1 Annular Space

The borehole shall be of sufficient diameter so that well construction can proceed without major difficulties. To assure adequate size, a minimum 2-inch annular space is required between the casing and the borehole wall (or the hollow-stem auger wall). For example, an 8-inch borehole is required to install a 4-inch outside diameter (OD) casing. However, if the inside diameter (ID) of the casing is 4 inches, the borehole will have to be larger than 8 inches to include the 2-inch annular space and the outside diameter (OD) of the casing (4-inch ID plus the casing wall thickness). The 2-inch annular space around the casing will allow the filter pack, bentonite pellet seal, and the annular grout to be placed at an acceptable thickness. Also, the 2-inch annular space will allow up to a 1.5-inch diameter tremie tube for placing the filter pack, pellet seal, and grout at the specified intervals. An annular space less than the 2-inch minimum will not be acceptable. When installing a well inside of hollow-stem augers, the inside diameter (ID) of the augers is the area to be considered when determining the 2-inch annular space.

E.3.2 Overdrilling The Borehole

Sometimes it is necessary to overdrill the borehole so any soils that have not been removed or have fallen into the borehole during auger or drill stem retrieval, will fall to the bottom of the borehole below the depth where the filter pack and well screen are to be placed. Normally, 3 to 5 feet is sufficient for overdrilling. The borehole can also be overdrilled to allow for placement of a sump in the well below the well screen. A sump usually consists of a 5- or 10-foot section of well casing located below the well screen. Sumps serve as catch basins or storage areas for sediment that flows into the well and drops out of suspension and for high density non-aqueous phase liquids. Sumps are added to the well screens when the wells are screened in aquifers that are naturally turbid and will not yield clear formation water (free of visible sediment) even after extensive development. The sediment can then be periodically pumped out of the sump preventing the well screen from clogging or "silting up". If the borehole is overdrilled too much, it can be backfilled to the designed depth with bentonite pellets or the filter sand that is to be used for the filter pack.

E.3.3 Filter Pack Placement

When placing the filter pack into the borehole, a minimum of 6 inches of the filter pack material shall be placed under the bottom of the well screen to provide a firm footing and an unrestricted flow under the screened area. Also, the filter pack shall extend a minimum of two feet above the top of the well screen. The filter pack shall be placed by the tremie or positive displacement method. Placing the filter pack by "pouring" may be acceptable in certain situations; however, this will be discussed in the next section.

E.3.4 Filter Pack Seal-Bentonite Pellet Seal (Plug)

A seal shall be placed on top of the filter pack. This seal shall consist

of a high solids, pure bentonite material. The solids content shall be at least 20 percent. Bentonite materials that have a solids content of 20 percent or greater are available in powder form or in the form of pellets compressed to a density of 70-80 lbs/cu.ft. The preferred method of placing bentonite pellets is by the positive displacement or the tremie method. Use of the tremie method minimizes the risk of pellets bridging in the borehole and assures the placement of pellets (also sand and grout) at the proper intervals. Pouring of the pellets (and filter pack materials) is acceptable in shallow boreholes (less than 50 feet) where the annular space is large enough to prevent bridging and to allow measuring (with a tape measure) to insure that the pellets have been placed at the proper intervals. In order to insure that the pellets have been placed at the proper intervals, the pellets shall be tamped, with an appropriate tamping tool, while the measuring is being conducted. The tamping process minimizes the potential for pellet bridging by forcing any pellets, that have lodged against the borehole wall and/or the well casing, down to the proper interval. The bentonite seal shall be placed above the filter pack at a minimum of two feet vertical thickness. The hydration time for the bentonite pellets shall be a minimum eight hours or the manufacturer's recommended hydration time, whichever is greater. In all cases, the proper depths shall be documented by measuring and not by estimating. Other forms of bentonite such as granular bentonite, and bentonite chips have limited applications, and are not recommended for the bentonite seal unless special conditions warrant their use. In any case, deviation from bentonite pellets for the seal, such as a 30 percent solids bentonite grout, shall be approved by a senior staff geologist. If for some reason, the water table is temporarily below the pellet seal interval, potable water (or a higher quality water) shall be used to hydrate the pellets.

E.3.5 Grouting The Annular Space

The annular space between the casing and the borehole wall shall be filled with either a high solids, pure (no additives), bentonite grout, a neat cement grout, or a cement/bentonite grout. Each type of grout to be used shall be evaluated as to its intended use and integrity. The grout shall be placed into the borehole, by the tremie method, from the top of the bentonite seal to within 2 feet of the ground surface or below the frostline, whichever is greater. The tremie tube shall have a side discharge port or a bottom discharge port, to minimize damage to the filter pack and/or the bentonite pellet seal, during grout placement. The grout shall be allowed to "set" or cure for a minimum of 24 hours before the concrete surface pad is installed. All grouts shall be prepared in accordance with the manufacturer's specifications. Bentonite grouts shall have a minimum density of 9.4 lbs/gal to ensure proper set-up. The density of the bentonite grouts shall be measured while mixing and no pumping of grout into the borehole will be allowed until the minimum density of 9.4 lbs/gal is attained. In addition, the grouting operation shall not cease until the grout flowing out of the borehole has a minimum density of 9.4 lbs/gal. A mud balance shall be used to measure the specified grout density. Estimating the grout density shall not be acceptable. Drilling muds will not be acceptable for grouting. Cement grouts shall be mixed using 6.5 to 7 gallons of water per 94-lb bag of portland cement (Type I). The addition of bentonite (5-to-10 percent) to the cement grout is for elasticity and the reason for its use shall be documented. The specific mixtures and other types of cements and/or grouts shall be evaluated on a case by case basis.

E.3.6 Above Ground Riser Pipe And Outer Protective Casing

The well casing, when installed and grouted, shall extend above the ground surface a minimum of 2.5 feet. In high traffic areas, the well casing may be located below grade, with a water proof cover. A vent hole shall be drilled or cut into the top of the well casing cap to permit pressure equalization, if applicable. An outer protective casing shall be installed into the borehole after the annular grout has "set" for at least 24 hours. The outer protective casing shall be of steel construction with a hinged, locking cap. Generally, an outer protective casing used over a 2-inch well casing is 4 inches square by 5 feet long. Similarly, a protective casing used over 4-inch well casings is 6 inches square and 5 feet long. Round protective casings are also acceptable. A protective casing shall have sufficient clearance around the inner well casing, so that the outer protective casing will not come into contact with the inner well casing after installation. The protective casing shall have a minimum of two weep holes for drainage. These weep holes shall be a minimum 1/4 inch in diameter and drilled into the protective casing just above the top of the level of concrete inside the protective casing to prevent water from standing inside of the protective casing. A protective casing made of aluminum or other soft metals is not acceptable because it is not strong enough to resist tampering. The protective casing is installed by pouring concrete into the borehole on top of the grout. The protective casing is then pushed into the wet concrete and borehole a minimum of 2 feet. Extra concrete may be needed to fill the inside of the protective casing so that the level of the concrete inside of the protective casing is at or above the level of the surface pad. The protective casings shall extend a minimum of 3 feet above the ground surface or to a height so that the cap of the inner well casing is exposed when the protective casing is opened.

E.3.7 Concrete Surface Pad

A concrete surface pad shall be installed around each well at the same time as the outer protective casing is being installed. The surface pad shall be formed around the well casing. Concrete shall be placed into the formed pad and into the borehole (on top of the grout) in one operation making a contiguous unit. The protective casing is then installed into the concrete as described in the previous section. The size of the concrete surface pad is dependent on the well casing size. If the well casing is two inches in diameter, the pad shall be 3 feet x 3 feet x 6 inches. If the well casing is 4 inches in diameter, the pad shall be 4 feet x 4 feet x 6 inches. Round concrete surface pads are also acceptable. The finished pad shall be sloped so that drainage will flow away from the protective casing and off of the pad. In addition, a minimum of one inch of the finished pad shall be below grade or ground elevation to prevent washing and undermining by soil erosion. At each site, all locks on the outer protective casings shall be keyed alike.

E.3.8 Surface Protection-Bumper Guards

If the monitoring wells are located in a high traffic area, a minimum of three bumper guards consisting of steel pipes 3 to 4 inches in diameter and a minimum 5-foot length shall be installed to a minimum depth of 2 feet below the ground surface in a concrete footing and extend a minimum of 3 feet above ground

surface. Concrete shall also be placed into the steel pipe to provide additional strength. Steel rails and/or other steel materials can be used in place of steel pipe but approval must be granted by a senior staff geologist or engineer prior to field installation.

E.4 CONSTRUCTION TECHNIQUES

E.4.1 Well Installation

The borehole shall be bored, drilled, or augered as close to vertical as possible, and checked with a plumb bob or level. Slanted boreholes will not be acceptable unless specified in the design. The depth and volume of the borehole, including the overdrilling if applicable, shall have been calculated and the appropriate materials procured prior to drilling activities. The well casings shall be secured to the well screen by flush-jointed threads and placed into the borehole and plumbed by the use of centralizers and/or a plumb bob and level. Another method of placing the well screen and casings into the borehole and plumbing it at the same time is to suspend the string of well screen and casings in the borehole by means of the wireline on the drill rig. The string of well screen and casings can be placed into the borehole and plumbed in one easy operation. This wireline method is especially useful if the borehole is deep and a long string of well screen and casings have to be set and plumbed.

No lubricating oils or grease shall be used on casing threads. Teflon tape can be used to wrap the threads to insure a tight fit and minimize leakage. No glue of any type shall be used to secure casing joints. Teflon® "O" rings can also be used to insure a tight fit and minimize leakage; however, "O" rings made of other materials are not acceptable if the well is going to be sampled for organic compounds.

Before the well screen and casings are placed on the bottom of the borehole, at least 6 inches of filter material shall be placed at the bottom of the borehole to serve as a firm footing. The string of well screen and casing shall then be placed into the borehole and plumbed. Centralizers can be used to plumb a well, but centralizers shall be placed so that the placement of the filter pack, bentonite pellet seal, and annular grout will not be hindered. Centralizers placed in the wrong places can cause bridging during material placement. Monitoring wells less than 50 feet deep generally do not need centralizers. If centralizers are used they should be placed below the well screen and above the bentonite pellet seal. The specific placement intervals shall be decided based on site conditions. When installing the well screen and casings through hollow-stem augers, the augers shall be slowly extracted as the sand pack, bentonite seal, and grout are tremied and/or poured into place. The extraction of the augers will allow the materials, being placed through the augers, to flow into the borehole instead of flowing up into the bottom of the augers causing potential bridging problems. After the string of well screen and casing is plumb, the filter material shall then be placed around the well screen (preferably by the tremie method) up to the designated depth. After the filter pack has been installed, the bentonite pellet seal shall be placed (preferably by the tremie method) directly on top of the filter pack up to the designated depth or a minimum of 2 feet above the filter pack. The bentonite pellet seal shall be allowed to hydrate a minimum of eight hours or the manufacturer's recommended hydration time, whichever is longer. After the pellet seal has hydrated for the specified time, the grout shall then be pumped by the tremie method into the annular space around the casings up to within 2 feet of the ground surface or below the frostline, whichever is greater. The grout shall be allowed to set for a minimum of 24 hours before the surface pad and protective

casing are installed. After the surface pad and protective casing are installed, bumper guards shall be installed (if needed). The bumper guards (a minimum of 3 bumper guards per well) shall be placed around or incorporated into the concrete surface pad in a configuration that provides maximum protection to the well. Each piece of steel pipe or approved material shall be installed into an 8- to 10-inch diameter hole, to a minimum depth of 2 feet below ground surface, and filled with concrete. As previously stated, the bumper guard shall extend above the ground surface a minimum of 3 feet. The total length of each bumper guard shall be a minimum of 5 feet.

After the wells have been installed, the outer protective casing shall be painted with a highly visible enamel paint. Care must be taken not to introduce any paint into the well. The wells shall be permanently marked with the well number, date installed, site name, elevation, etc., either on the cover or an appropriate place that will not be easily damaged and/or vandalized.

If the monitoring wells are installed in a high traffic area such as a parking lot, in a residential yard, or along the side of a road it might be desirable to complete the wells flush with the ground surface and install water-tight traffic covers. Traffic covers are designed to extend from the ground surface down into the concrete plug around the well casing. The covers shall have seals that make the unit water-tight when closed and secured. The traffic covers shall be installed as far above grade as practical to minimize standing water and promote runoff.

E.4.2 Double Cased Wells

Double cased wells shall be constructed when there is reason to believe that interconnection of two aquifers by well construction may cause cross contamination, and/or when flowing sands make it impossible to install a monitoring well using conventional methods. A pilot borehole shall be bored through the overburden and/or the contaminated zone into the clay confining layer or bedrock. An outer casing (sometimes called surface or pilot casings) shall then be placed into the borehole and sealed with grout. The borehole and outer casing shall extend into tight clay a minimum of five feet and into competent bedrock a minimum of two feet. The total depths into the clay or bedrock will vary, depending on the plasticity of the clay and the extent of weathering and/or fracturing of the bedrock. The size of the outer casing shall be of sufficient inside diameter (ID) to contain the inner casing, and the 2-inch minimum annular space. In addition, the borehole shall be of sufficient size to contain the outer casing and the 2-inch minimum outer annular space, if applicable. The outer casing shall be grouted by either the tremie method or by pressure grouting to within 2 feet of the ground surface. The grout shall be pumped into the annular space between the outer casing and the borehole wall. This can be accomplished by either placing the tremie tube in the annular space and pumping the grout from the bottom of the borehole to the surface, or placing a grout shoe or plug inside the casing at the bottom of the borehole and pumping the grout through the bottom grout plug and up the annular space on the outside of the casing. If the outer casing is set into very tight clay, both of the above methods might have to be used, because the clay usually forms a tight seal in the bottom and around the outside of the casing preventing grout from flowing freely during grout injection. On the other hand, outer casing set into bedrock

normally will have space enough to allow grout to flow freely during injection. A minimum of 24 hours shall be allowed for the grout plug (seal) to "set" or cure before attempting to drill through it. The grout mixture used to seal the outer annular space can be either a neat cement, cement/bentonite, cement/sand, or a pure bentonite grout. However, the seal or plug at the bottom of the borehole and outer casing shall consist of a Type I portland cement/bentonite or cement/sand mixture. The use of a pure bentonite grout for a bottom plug or seal is not acceptable, because the bentonite grout sets or cures to a gel and is not rigid enough to withstand the stresses of drilling. When drilling through the seal, care shall be taken to avoid cracking, shattering, and/or washing out of the seal, which will be discussed in the next section. If caving conditions exist so that the outer casing cannot be sufficiently sealed by grouting, the outer casing shall be driven into place with a grout seal placed in the bottom of the casing. Removal of outer casings, which are sometimes called temporary surface casings, after well screens and casings have been installed and grouted is not acceptable. Trying to remove outer surface casings after the inner casings have been grouted could only jeopardize the structural integrity of the well.

E.4.3 Bedrock Wells

The installation of monitoring wells into bedrock can be accomplished in two ways:

1. The first method is to drill or bore a pilot borehole through the soil overburden into the bedrock. An outer casing is then installed into the borehole by setting it into the bedrock, and grouting it into place as described in the previous section. After the grout has set, the borehole can then be advanced through the grout seal into the bedrock. The preferred method of advancing the borehole into the bedrock is rock coring. Rock coring makes a smooth, round hole through the seal and into the bedrock without cracking and/or shattering the seal. Roller cone bits are used in soft bedrock, but extreme caution shall be taken when using a roller cone bit to advance through the grout seal in the bottom of the borehole because excessive water and "down" pressure can cause cracking, eroding(washing), and/or shattering of the seal. Low volume air hammers have been used to advance the borehole, but they have a tendency to shatter the seal because of the hammering action. Any proposed method will be evaluated on its own merits, and will have to be approved by a senior staff geologist before drilling activities begin. When the drilling is complete, the finished well consists of an open borehole from the ground surface to the bottom of the well. There is no inner casing, and the outer surface casing, installed down into bedrock, extends above the ground surface, and also serves as the outer protective casing. If the protective casing becomes cracked or is sheared off at the ground surface, the well is open to direct contamination from the ground surface and will have to be repaired immediately or abandoned. In some instances, the outer surface casing is cut off at the surface or below the surface, depending on the design, and a separate outer protective casing is installed. Another limitation to the open rock

well is that the entire bedrock interval serves as the monitoring zone. In this situation, it is very difficult or even impossible to monitor a specific zone, because the contaminants being monitored could be diluted to the extent of being nondetectable. The use of open bedrock wells are generally not acceptable in the Superfund and RCRA programs because of the uncontrolled monitoring intervals. However, some site conditions might exist, especially in cavernous limestone areas (Karst topography) or in areas of highly fractured bedrock, where the installation of the filter pack and its structural integrity are questionable. Under these conditions the design of an open bedrock well may be warranted.

2. The second method of installing a monitoring well into bedrock is to install the outer surface casing and drill the borehole (by the approved method) into bedrock, and then install an inner casing and well screen with the filter pack, bentonite seal, and annular grout. The well is completed with a surface protective casing and concrete pad. This well installation method gives the flexibility of isolating the monitoring zone(s) and minimizing inter-aquifer flow. In addition, it gives structural integrity to the well, especially in unstable areas (steeply dipping shales, etc.) where the bedrock has a tendency to shift or move when disturbed. Omitting the filter pack around the well screen is a general practice in some open rock borehole installations, especially in drinking water and irrigation wells. However, without the filter pack to protect the screened interval, sediment particles from the well installation and/or from the monitoring zone could clog the well screen and/or fill the screened portion of the well rendering it inoperable. Also, the filter pack serves as a barrier between the bentonite seal and the screened interval. Rubber inflatable packers have been used to place the bentonite seal when the filter pack is omitted. This method is not acceptable because the packers have to remain in the well permanently and, over a period of time, will decompose and possibly contribute contaminants to the monitoring zone.

APPENDIX D

Appendix D

Southern Division Guidelines for Monitoring Well Installations

Rev; 4
Date: 27 MAR 89

SOUTHERN DIVISION NAVAL FACILITIES
ENGINEERING COMMAND

GUIDELINES FOR GROUNDWATER MONITORING WELL INSTALLATION

PART 1: GENERAL

1.1 Introduction

Groundwater monitoring wells shall be located at sites approved by the Southern Division Engineer-In-Charge (EIC) and the Activity Environmental Coordinator (EC). All applicable local, state and federal regulations concerning well installations or soil borings shall be followed.

1.2 Applicable Publications

The publications listed below form a part of this guideline to the extent referenced. The publications are referred to in this text by designation only. The latest revision of the specifications shall be followed.

1.2.1 American Association of State Highway and Transportation Officials (AASHTO)

Document No.	Title
M 220	Epoxy Coatings Specifications

1.2.2 American Society of Testing and Materials (ASTM)

Document No.	Title
A 120	Pipe, Steel, Black and Hot-dipped, Zinc coated, welded and seamless
A 312	Seamless and Welded Austenitic Stainless Steel Pipe
B 209	Aluminum and Aluminum-alloy Sheet and Plate
C 150	Portland Cement
C 778	Standard Sand
D 1457	Polytetrafluoroethylene (PTFE) Molding and Extrusion Materials
D 1785	Standard Specification of Polyvinyl Chloride Pipe (PVC Pipe, Schedules 40, 80, 120)
D 1586	Method for Penetration Test and Split Barrel Sampling of Soils
D 1587	Practice for Thin Wall Tube Sampling of Soils.

Document No.	Title
D 2113	Diamond Core Drilling for Site Investigation
F 480	Thermoplastic Water Well Casing, Pipe and Couplings Made in Standard Dimension Ratios (SDR)
F 883	Padlocks

1.2.3 American Petroleum Institute (API)

Document No.	Title
13-A	Oil Well Drilling Fluid Specifications

1.3 Submittals

1.3.1 A completed "Southern Division Naval Facilities Engineering Command Groundwater Monitoring Well Installation Report" will be submitted for each well installation.

1.3.2 Certificates of Conformance: A certificate of conformance shall be provided to the EIC for any of the items below that are used in a well installation. The certificate shall describe in detail how the material meets or exceeds the required specifications for the following, as appropriate:

a) Casing
b) Screen
c) Grout
d) Drilling Mud
e) Gravel Pack
f) Caps and Plugs
g) Centralizers
h) Surface Casing
i) Well Protective Cover
j) Flush Mount Protective Cover
k) Padlock
l) Protective Post
m) Well Designation Sign
o) Epoxy Paint

1.4 Delivery and Storage

All materials shall be delivered in undamaged condition, stored in accordance with manufacturer's recommendations (off the ground) and protected from the weather in an area designated by the EC. All defective or damaged material will be replaced with new material at no cost to the government.

PART 2: PRODUCTS

2.1 All materials shall conform to the respective specifications and other requirements as specified herein.

2.1.1 Well Casing

Material type will be approved by the EIC. The material provided will have adequate strength to resist external forces both during and after installation. The casing threads shall be compatible with the screen listed in 2.2.2. Markings, writing or paint strips are not allowable on any of the materials. The casing shall

conform to the specifications listed below.

a. PVC, flush threaded joints (schedule 40) ASTM F480 and ASTM D1785

All PVC flush threaded joints will meet or exceed the water pressure ratings (at 73 degrees Fahrenheit) for the size and schedule of PVC pipe used in the project, as listed in ASTM D1785: Table XI.2.

b. Polytetrafluoroethylene (PT~E), flush threaded joints, ASTM D1457

Virgin materials shall be used to meet the ASTM specification. Certification of compliance and joint evaluation are required. Shall be shipped in sealed containers that are capable of preventing contact with any foreign substances. PTEF "O" rings are required to seal all joints.

c. 316 stainless steel, flush threaded joints, ASTM A312
d. 304 stainless steel, flush threaded joints, ASTM A312

End fittings shall be double entry flush screw threads. The casing shall be cleaned prior to delivery in the following manner: 5-minute immersion in static bath of dilute acid, pressure ~ash with detergent and cool water, rinse with warm water and allow to air dry.

2.1.2 Well Screen

Material type will be approved by the EIC. The material provided will have adequate strength to resist external forces both during and after installation. Water velocity through the screen openings shall not exceed 0.1 feet/sec. The opening size will be determined from an analysis of the material in geologic formation to be screened and/or the size of the filter pack material. Markings, writing or paint strips are not allowable on any of the materials. The screens shall conform to the specifications listed below.

a. PVC, flush threaded joints (schedule 40), slotted, ASTM F480 and ASTM D1785

Two inch I.D. screens will have 3 rows of slots with a spacing of 1/8 inch between slots. Four inch I.D. screens will have six rows of slots with a spacing of 1/8 inch between slots. All PVC flush threaded joints will meet or exceed the water pressure ratings (at 73 degrees Fahrenheit) for the size and schedule of PVC pipe as listed in ASTM D1785, Table XI.2.

b. Polytetrafluoroethylene (PTFE), flush threaded joints, slotted, ASTM D1457

Virgin materials shall be used to meet the ASTM specification. Certification of compliance and joint evaluation are required. Shall be shipped in sealed containers. PTEF "O" rings will be used to seal all joints.

c. 316 stainless steel, wire wrapped, flush threaded joints, ASTM A312
d. 304 stainless steel, wire wrapped, flush threaded joints, ASTM A312

The well screen shall be of a continuous slot, wire wound design. It shall be fabricated by circumferentially wrapping a triangularly shaped wire around a circular array of internal rods. The configuration must produce sharp outer edges, widening inward. PTFE "O" rings will be used to seal all joints. End fittings will be welded to the screen body.

2.1.3 End Plugs

The end plug shall be flush threaded and shall be constructed of the same type of material selected for the screen or casing above. All ASTM specifications that apply to the screen and casing materials shall apply to the end plugs. Markings, writing or paint strips are not allowable on any of the above materials.

2.1.4 Well Caps

The well cap shall be flush threaded and be constructed of the same type of material selected for the casing above. All ASTM specifications that apply to the casing materials shall apply to the well caps. Markings, writing or paint strips are not allowable on any of the above materials.

2.1.5 Adjustable Centralizers

The centralizer shall be capable of maintaining the casing and screen straight and plumb in the borehole during well installation. The material type shall be the same type of material selected for the casing/screen above. No solvents or glues will be used.

2.1.6 Annular Space Fill Materials

a. Filter pack shall be 98% pure silica, cleaned with potable water, have a uniformity coefficient of 1-3, and a specific gravity of 2.6 - 2.7. The filter pack shall meet ASTM C 775 standard sand specifications.

b. 1/4-inch bentonite pellets shall be 90~ montmorillonite clay, with a bulk dry density 80 lbs/cu ft, a specific gravity 1.2, and a pH of 8.5-10.5.

c. Granular bentonite shall conform to API std 13-A for bentonite. -

d. Portland Cement shall conform to ASTM C 150 Type I.

2.1.7 **Surface Casing**: shall be constructed of steel meeting ASTM A 120 and shall have a wall thickness as specified below.

a. 24 inch diameter 0.25 inch wall thickness
b. 20 inch diameter 0.25 inch wall thickness
c. 16 inch diameter 0.25 inch wall thickness
d. 10.75 inch diameter 0.25 inch wall thickness
e. 24 inch diameter 0.50 inch wall thickness
f. 20 inch diameter 0.50 inch wall thickness
g. 16 inch diameter 0.50 inch wall thickness
h. 10.75 inch diameter 0.365 inch wall thickness

2.1.8 **Surface Completion: all materials provided for a well surface completion shall conform to the specifications listed below.**

a. Locking 16-gauge steel protective well cover, round or square and 5-ft in length

b. Flush mount 22-gauge steel, water resistant welded box with 3/8-inch steel lid, locking

device and padlock guard

c. Concrete pad at ground surface (3' X 4' X 6") ASTM C 150

d. Padlock (brass, corrosion resistant, keyed alike) ASTM F 883

e. Steel protective post (4-inch diameter, 6-ft length, 1/4-inch thickness, concrete filled) ASTM A 120.

f. Well designation sign, sheet aluminum, ASTM B 209, 1/8 inch by 18 inch by 6 inch, anchors and fasteners compatible with sign, designation to be provided by EIC, the designation shall be stamped into the plate with 4-inch letters and numbers.

g. High visibility yellow epoxy paint AASHTO M220.

PART 3: EXECUTION

3.1 Drilling Method

The proposed drilling method must be approved by the EIC. Hollow-stem auger methods will be given first preference, rotary methods second and any other methods will require detailed evaluation by the EIC and written approval.

3.2 Well Installation

Well depths, length of screen and sump will be determined on a site specific basis with approval of the EIC. Screen lengths will be limited to 10 feet unless longer lengths are specifically approved in writing by the EIC. Two inch well diameters will be specified for shallow well installations. Deeper well installations or wells that will be converted to recovery wells may require four inch wells. Recovery well specifications will be approved by the EIC.

Well installation shall follow commonly accepted professional drilling procedures. The borehole will be logged by a qualified geologist/hydrogeologist as drilling proceeds. The minimum qualifications are those describing a "Geologist-in-Training", as described in Article 1, Chapter 23, Title 1, Code of Laws of South Carolina: Rules of the South Carolina State Board of Registration for Geologists. Soil samples shall be collected according to one of the following methods: ASTM D 1586-Method for Penetration Test and Split Barrel Sampling of Soils or ASTM D 1587-Practice for Thin Wall Tube Sampling of Soils. Consolidated Rock will be sampled according to ASTM D2113 Diamond Core Drilling for Site Investigation.

Gravel pack, seals, and grout will be installed using tremie methods. Bentonite seals shall be allowed to hydrate the time period specified by the manufacturer. Accurate measurements shall be made to the top of the gravel pack and seals with a weighted steel tape and adjusted to reflect the top of casing.

If water is used in the drilling process, a sample shall be collected from the source and analyzed for the parameters specified in the investigation. Results will be included in the investigation report.

3.3 Well Development

Well development shall commence no sooner than 24 hours after placement of the grout. The development method shall be approved by the EIC. The selected method shall be capable of removing all drilling fluids and cuttings from inside the well, within the gravel pack and from within the formation. The development method shall not introduce any type of contamination into the aquifer. Introduction of outside water to the well shall be minimized. Any water introduced into the well shall be recovered to the maximum extent possible. A written report will be required describing the reasons why any introduced water could not be recovered.

The development process should result in wells that are sediment free. A well that produces turbid water (as defined by the Safe Drinking Water Act PL 93-523) may be rejected by the EIC. ;

3.4 Material Disposal

All borehole cuttings and development water will be contained in - DOT 17-C Open-top 55-gallon drums, permanently labeled by well number and stored in a location designated by the EC. The material will be handled as hazardous waste until laboratory results are reviewed and certification of the waste is submitted to the Navy. This requirement may be waived if approval is given in writing by the EIC. The material may then be disposed of as normal solid waste if it does not exceed any state or federal regulatory limits for the type of waste in question. The Navy will be responsible for disposal of all waste unless other direction is given by the EIC.

3.5 Decontamination

All down-hole drilling equipment the drill rig, tools, etc.) will be decontaminated according to the approved Quality Control Plan prior to beginning work, between each well location and after the last well is completed. The drill rig will be placed on 10-mil polyethylene sheeting at each drilling site to contain any spillage or leaking of hydraulic fluid or fuel. All of the decontamination waste will be handled according to section 3.4 above.

3.6 Well Protection

A steel, hinged, locking protective casing will be installed within a 3-ft by 4-ft by 6-inch thick concrete pad. The pad will be set level and 4-inches below grade. The pad shall be installed so that surface runoff does not pond around the well casing and protective cover. The concrete mix shall obtain a minimum 28-day compressive strength of 3000 pounds per square inch.

If designated by the EIC, four steel protective posts will be installed 0.5 ft from the corners of the pad but not set within the pad. The post will be 6-ft in length, 4-inch in diameter and have a wall thickness of 0.25-inch. The post will be filled with concrete and set three feet below grade in a 10-inch diameter hole with concrete backfill (as above).

The protective casing and any protective post installed shall be cleaned, primed-and then painted with two coats of high visibility yellow epoxy paint that meets the specifications of AASHTO M 200. The protective casing will be locked with a Type Po1 (Key Operated), Option E (Corrosion Resistant) padlock that conforms to ASTM F 883. When multiple wells are installed, the padlocks for each well at an activity shall be keyed alike. The original and two copies of all keys shall be delivered to the EIC and two copies shall be delivered to the EC. All keys shall be tested to ensure performance prior to delivery.

3.7 Well Designation

A permanent well designation sign will be attached to the protective casing. The sign shall be a 18-inch by 6-inch by 1/8-inch thick sheet aluminum plate, bolted to 1/4-inch studs welded to the casing. The sign shall be stamped with 4-inch letters and numbers in accordance with the numbering system in section 4.0 of this specification.

PART 4. INSTALLATION RESTORATION PROGRAM WELL NUMBERING SYSTEM

The purpose of this well numbering system is to locate a particular well by activity, key it to the Initial Assessment Study (IAS) and sequentially number each well at each site. The EIC will provide designations for sites not included in the IAS.

Example:	CEF-1-I	Cecil Field, Site 1, Well number I
	KYW-5-8	Key West, Site 5, Well Number 8

FLORIDA

Cecil Field	CEF
Ft. Lauderdale	FLD
Key West	KYW
NavHosp Key West	KWH
Homestead	HST
Jacksonville	JAX
Mayport	MPT
Panama City	PCY
Whiting Field	WHF
Andros Island	AIS
Pensacola	PEN
Saufley	SFY
Correy Station	CRY
Orlando	OLD

GEORGIA

Albany	ALB
Atlanta	ATL
Kings Bay	KBA
Athens	ATH

SOUTH CAROLINA

Parris Island	PAI
Beaufort	BFT
NavHosp Beaufort	BFH
NWS Charleston	NWS
NS Charleston	CSY

LOUISIANA

NAS New Orleans	NOA
NSA New Orleans	NOS

MISSISSIPPI

Gulfport	GPT
NavHome Gulfport	GPH
Meridian	MRD

TENNESSEE

Memphis	MPH
Bristol	BRT

TEXAS

Corpus Christi	CCT
Chase Field	CAF
Kingsville	KVE
NAS Dallas	DNA
NWIRP Dallas	DWP
McGregor	MGR

APPENDIX E

Appendix E

USEPA Reporting Requirements for Data

UNITED STATES ENVIRONMENTAL PROTECTION AGENCY

REGION IV

345 COURTLAND STREET, N E
ATLANTA, GEORGIA 30365

FEB 25 1991

4WD-RCRA & FF

CERTIFIED MAIL
RETURN RECEIPT REQUESTED

Mr. Danny Gillum
Natural Resources and Environmental Affairs
Marine Corps Logistics Base Code (506)
Albany, Georgia 31704-5000

Re: EPA Environmental Monitoring Data Reporting Requirements

Dear Mr. Gillum:

Your facility is required to report environmental monitoring data from a variety of media to EPA under requirements of CERCLA pursuant to a Section 120 Federal Facility Agreement. In order to comply with the terms of such Agreements and permits as well as national EPA policies, the Region is establishing minimum requirements for the submission of environmental monitoring data.

The purpose of these requirements is to ensure that all environmental monitoring data reported under RCRA or CERCLA is readily available, reliable and consistent in order for EPA to fulfill its role as regulator and oversight agency through timely reporting and interpretation of environmental monitoring data. This will enable your facility and EPA to better protect public health and the environment.

The minimum requirements are:

1. All environmental monitoring data shall be submitted to EPA in a consistent format with consistent parameters that will facilitate collection and recording of such data in a computer data-file.

   - The data elements reported should meet the specific requirements of the applicable regulatory program(s), field QA/QC procedures, laboratory quality assurance procedures and EPA-approved workplans. EPA Region IV has developed a generic computer data-file and export protocol that is recommended for use in meeting this requirement (enclosure 1). The enclosed data-file protocol indicates the data elements (fields) that will be required at a minimum by EPA to identify sampling stations.

- A Data Management Plan should be developed to establish minimum data elements, parameters and formats for all environmental monitoring data submitted to EPA.

2. All environmental monitoring data shall comply with the EPA National Locational Data Policy developed by EPA's Office of Information Resources Management (enclosure 2).

   - The generic data-file and export format has provisions for meeting this requirement (enclosure 1).

The above requirements must be incorporated into all Remedial Investigation (RI) or RCRA Facility Investigation (RFI) workplans and/or Data Management Plans submitted to EPA for review and approval, in accordance with appropriate timetables and deadlines, subsequent to receipt of this letter.

If you have any questions concerning the above requirements, please contact Mickey Hartnett, Chief, DOD Remedial Unit or Jim Barksdale, Remedial Project Manager at (404) 347-3016. If you have specific questions regarding the data-file export protocol please contact Ms. Phyllis Mann at (404) 347-3402.

Sincerely yours,

Michael G. Hartnett

for James H. Scarbrough, P.E., Chief
RCRA & Federal Facilities Branch
Waste Management Division

Enclosures

cc: Don McHugh, GEPD, w/enclosure
Cacky Barefoot, Southern Division, w/enclosure

EPA LOCATIONAL DATA POLICY

EPA's Officer of Information Resources Mangement (OIRM) has developed a policy to be adopted by EPA, and its delegates and representatives, for collecting and documenting locational data about the entities tracked under Federal Environmental programs within EPA's juridiction. The policy clearly defines responsibilities for obtaining locational measurements for all facilities, sites and monitoring and observation points of primary interest to EPA. In addition, the policy explicitly specifies latitude and longitude, in an intentionally-compatible format, as the Agency's preferred locational coordinate system. Implementation of this policy will allow Agency data to be intergrated based upon location, thereby promoting enhanced use of EPA's extensive data resources for cross-media environmental analyses and management decisions.

1. PURPOSE. This policy establishes the principles for collecting and documenting latitude/longitude coordinates for facilities, sites and monitoring and observation points regulated or tracked under Federal environmental programs within the jurisdiction of the Environmental Protection Agency (EPA). The intent of this policy is to extend environmental analyses and allow data to be integrated based upon location, thereby promoting the enhanced use of EPA's extensive data resources for cross-medial environmental analyses and management decisions. This policy underscores EPA's commitment to establishing the data infrastructure necessary to enable data sharing and secondary data use.

2. SCOPE AND APPLICABILITY. This policy applies to all Environmental Protection Agency (EPA) organizations and personnel of agents (including contractors and grantees) of EPA who design, develop, compile, operate or maintain EPA information collections developed for environmental program support. The requirements of this policy apply to existing as well as new data collections.

3. BACKGROUND.
   a. Fulfillments of EPA's mission to protect and improve the environment depends upon improvements in cross-programmatic, multi-media data analyses. A need

February 1991

for available and reliable location identification information is a commonality which all regulatory tracking programs share.

b. Standard location identification data will provide a return yet unrealized on EPA's sizable investment in environmental data collection by improving the utility of these data for a variety of valued-added secondary applications often unanticipated by the original data collectors.

c. EPA is committed to implementing its locational policy in accordance with the requirements specified by the Federal Interagency Coordinating Committee for Digital Cartography (FICCDC). The FICCDC has identified the collection of latitude/longitude as the most preferred coordinate system for identifying location.

4. AUTHORITIES

a. 15 CFR Part 6 Subtitle A, Standardization of Data Elements and Representations.

b. Geological Survey Circular 878-B, A U.S. Survey Data Standard, Specifications for Representation of Geographic Point Locations for Information Interchange.

c. Federal Interagency Coordinating Committee on Digital Cartigraphy (FICCDC)/U.S. Office of Management and Budget, Digital Cartographic Data Standards: An Interim Proposed Standard.

d. EPA Regulations 40 CFR 30.503 and 40 CFR 31.45, Quality Assurance Practices under EPA's General Grant Regulations.

5. POLICY.

a. It is EPA policy that latitude/longitude ("lat/long") coordinates be collected and documented with environmental and related data. This is in addition to, and not precluding, other critical location identification data that may be needed to satisfy individual program or project needs, such as depth, street address, elevation or altitude.

February 1991

b. This policy serves as a framework for collecting and documenting location identification data. It does not include a requirement that a particular level of precision or accuracy be achieved; managers of individual data collection efforts determine the levels precision and accuracy necessary to support their mission. However, this policy does serve as a starting point for acquiring these critical data.

c. To implement this policy, program data managers must collect and document the following:

(1) Latitude/longitude coordinates in accordance with Federal Interagency Coordinating Communitee for Digital Cartigraphy (FICCDC) recommendations. The coordinates may be present singly or multiple times, to define a point, line or area, according to the most appropriate data type for the entry being represented.

This format for representing this information is:

+/-DD MM SS.SSSS (latitude)
+/-DDD MM SS.SSSS (longitude)

where:

- Latitude is always presented before longitude,
- DD represents degrees of latitude; a digit decimal number ranging from 00 through 90,
- DDD represents degrees of longitude; a three digit decimal number ranging from 000 through 180,
- MM represents minutes of latitude or longitude, a two-digit decimal number ranging from 00 through 60,
- SS.SSSS represents seconds of latitude or longitude, with a format allowing possible precisions to the ten-thousandths of seconds actual accuracy to be program and case specific,

- + specifies latitudes north of the equator and longitudes east of the prime meridian, and

- - specifies latitudes south of the equator and longitudes west of the prime meridian.

(2) Specific method used to determine the lat/long coordinates (e.g., remote sensing techniques, map interpolation, cadastral survey);

(3) Texual description of the entity to which the latitude/longitude coordinates refer (e.g., morth-east corner of site, entrance to facility, point of discharge, drainage ditch);

(4) Estimate of accuracy in terms of the most precise units of measurements used (e.g., if the coordinates are given to tenths-of-seconds precision, the accuracy estimate should be expressed the terms of the range of tenths-of-seconds within which the true value should fall, such as "+/- 0.5 seconds").

d. Recommended labeling of the above information is as follows:

- "Latitude"
- Longitude"
- "Method"
- "Description"
- "Accuracy."

e. This policy does not preclude or rescind more stringent regional or program-specific policy and guidance.

f. Formats, standards, coding conventions or other specifications for the method, description and accuracy information shall be as specified by the Regional Program as appropriate.

6. RESPONSIBILITY FOR IMPLEMENTATION

Assistant Administrators, Associate Administrators, Regional Administrators, Laboratory Directors and the General Counsel shall establish procedures within their respective organizations to ensure information collection and reporting systems under their direction are in compliance with this policy.

February 1991

Interchange File Format
for
Electronic Data Reports

This document establishes, for EPA Region IV, the required format for electronic reporting of monitoring data.

Data will be transported as a set of four ASCII files:

STATION.DAT	-	contains basic information about monitoring station location and type. Detailed description of the structure is contained in appendix A.
WELL.DAT	-	contains detailed information about construction and characteristics of groundwater monitoring stations. See appendix B.
SAMPLE.DAT	-	contains basic information about the collection and characteristics of samples. See appendix C.
PARM.DAT	-	contains measured values and reporting units for specific parameters. See appendix D.

The first line of EACH of the four files MUST contain the following text starting in position one: 19901001

These files are to be transmitted in ASCII format using 5.25 inch flexible disk, nine-track magnetic tape (1600 or 6250 bpi) or, in the future, via communications channels yet to be defined. Hardcopy reporting requirements will continue as currently required until further notice. Additional files may be defined in the future for non-groundwater station types should the need arise.

Several of these files will contain data that is usually static in nature. For example, the basic information contained in STATION.DAT will not normally change for any single station, therefore once the data has been submitted for a particular station, it will not be required to resubmit that information. If, however, the station record is updated or corrected the record would have to be resubmitted. After the initial report then, STATION.DAT would be submitted only when new stations are created, or when an old station record is modified, and need only contain the new or modified records. The same is true of file WELL.DAT. SAMPLE.DAT would, of course, be submitted each time one or more new samples were to be reported, or any sample record required updating. Again, the file need only contain the new or updated records. PARM.DAT is expected to be submitted at each required reporting interval, since it will contain the

analytical results needed to determine compliance. It must contain all new results for the reporting interval, and may contain corrections and updates to older records. As may be observed, the format allows for asynchronous reporting, provided that no sample may be reported before the station with which it is associated, and no parametric record before its sample record.

For each file described in the appendices, all fields must be reported. The null , or "no data", value for all fields is the pound sign (#), and must appear in the first column position of its field. Field values may be listed one per line in the export file, or multiple values may be reported on a single line, provided that field values are reported in the specified order, and each value is terminated by a comma (,). Lines containing multiple values may not exceed 80 characters in length, including the delimiters. Since the comma is used as a delimiter for data values, the values themselves may not contain any comma, even though the value may be a text stream.

Datafile STATION.DAT

field no.	field name	field Description
1	STATION_KEY *	Unique station identifier. Consists of a twenty-seven character alphanumeric field, left justified, containing:

column:	description:
1-12	Unique site identifier as assigned by EPA. Must be alphanumeric.
13-17	Unique solid waste management unit designator. Must be alphanumeric.
18	Media status indicator. Must contain one of the following: C - compliance monitoring station B - baseline monitoring station A - other ambient monitoring station.
19 - 27	Unique station identifier. Must be alphanumeric.

If this data is to be used with the Region IV Query menu, the naming convention recomended for stations is as follows. Monitoring wells should contain 'MW',test pits 'TP',boreholes 'BH', surface soil 'SS'.

2	TYPE *	Type of monitoring station. Consists of a four-character alphanumeric field, left justified, containing one of the following: AIR, SWTR, GWTR, SOIL, SED, and SLDG. The meanings of these abbreviations are as follows: AIR - Air sampling station SWTR - Surface water sampling station GWTR - ground water sampling station SOIL - soil sampling station SED - Stream bed sediment SLDG - process sludge sampling
3	LATITUDE *	Geographic position of the station in degrees north of the equator. Must be in the format DDMMSS.xxxx, where DD represents degrees, MM represents minutes, and SS.xxxx represents seconds, with available precision to four decimal places.
4	LONGITUDE *	Geographic position of the station in degrees

* required field

west of the Prime Meridian. Must be in the format DDDMMSS.xxxx, where DDD represents degrees, MM represents minutes, and SS.xxxx represents seconds, with available precision to four decimal places.

5 LSDAT * Elevation in feet (MSL) of land surface at the location of the monitoring station. Must be a DECIMAL NUMERIC field with a maximum of twelve characters (including the decimal point) and may have up to two digits after the decimal point.

6 RFDAT * Elevation in feet (MSL) of the point from which height above ground, water level and sampling depth measurements are taken. DECIMAL NUMERIC field with a maximum of twelve characters (including the decimal point) and may have up to two digits after the decimal point.

7 CONDT Date construction of the station was completed. Eight character integer field consisting of:

columns	content
1-4	year including century, e.g. 1989
5-6	numeric month
7-8	numeric day of month

Column numbers are relative to the beginning of the CONDT Field. Each subfield described above must be right justified, and may contain leading zeros.

8 ACCUR * Estimated accuracy for the reported latitude and longitude,in meters. DECIMAL NUMERIC field with a maximum of six characters (including the decimal point) and may have up to two digits after the decimal point.

9 LLMETH * One character alphanumeric field which indicates the method used to determine the latitude and longitude. Contains one of the following:

C - Calculated from map
D - Digitized from a map
G - Global Positioning System
L - Loran-C
U - Unknown

10 OMETH Any method for which there is no code. This field consists of 32 character ALPHANUMERIC field,left justified.

11 COMMENT Any additional information the user feels necessary,

* required field

which may not be accomodated in a defined field. Must be ALPANUMERIC consisting of up to 40 characters.

* required field

Appendix B

Datafile WELL.DAT

field no.	field name	field Description
1	STATION_KEY *	Unique station identifier. Consists of a twenty-seven character alphanumeric field, left justified, containing: column: description: 1-12 Unique site identifier as assigned by EPA. Must be alphanumeric. 13-17 Unique solid waste management unit designator. Must be alphanumeric. 18 Media status indicator. Must contain one of the following: C - compliance monitoring station B - baseline monitoring station A - other ambient monitoring station. 19 - 27 Unique station identifier. Must be alphanumeric.
2	AQNAM *	USGS Aquifer Code for aquifer from which samples are obtained. Alphanumeric field with up to eight characters.
3	TOTDP	Total depth to which the hole was drilled, bored or dug in feet below land surface datum. DECIMAL NUMERIC field with a maximum of twelve characters (including the decimal point) and may have up to two digits after the decimal point.
4	DRMTH	Method by which well was constructed. Must be ALPHANUMERIC, consisting of a single character. The character must be one of the following: H - hollow stem auger S - solid stem auger C - cable tool R - rotary V - reverse rotary D - dug J - water jet A - air percussion O -other
5	DRFLD	Fluid used to lubricate cutting tool and/or remove materials from hole. Must be ALPHANUMERIC, consisting of a single character. The character must be one of the following:

* required field

A - air	M - other mud
B - bentonite	N - none
W - water	O - other fluid

6 DVMTH

Method by which well was developed. Must be ALPHANUMERIC, consisting of a single character. The character must be one of the following:

A - air lift pump	B - bailed
C - compressed air	J - jetted
P - other pump	S - surged
Z - other method	N - none

7 DVHRS

Time in hours during which well was developed. Must be INTEGER NUMERIC, consisting of up to 5 digits.

8 SPLTRT

Any special treatment that was applied during the well development process. Must be ALPHANUMERIC, consisting of a single character, which must be one of the following:

C - chemicals	D - dry ice
E - explosives	F - deflocculant
H - hydrofracturing	M - mechanical
Z - other	N - none

9 LIFT

Type of lift indicator. Must be Alphanumeric, consisting of a single character. The character must be one of the following:

A - air lift	R - rotary pump
B - bucket	S - submersible pump
C - centrifugal pump	T - turbine
J - jet pump	U - unknown
P - Piston pump	Z - other

10 NOSEG

Number of bore hole sections. A bore hole section is defined as a length of bore hole of constant diameter. Bore hole sections are designated numerically from top to bottom of bore hole. INTEGER NUMERIC field containing a value of one or two.

11 SGDIA1

Diameter of first bore hole section, in inches.

12 SGDIA2

Diameter of second bore hole section, in inches.

13 SGDIA3

Diameter of third bore hole section, in inches.

Each of the SGDIAx fields is DECIMAL NUMERIC, containing up to twelve characters (including the

* required field

decimal point), and may have up to two digits following the decimal point.

14	STELV1	The depth to the top of the first bore hole section .
15	STELV2	The depth to the top of the second bore hole section .
16	STELV3	The depth to the top of the third bore hole section .

Each of the STELVx fields is DECIMAL NUMERIC with a maximum of twelve characters (including the decimal point) and may have up to two digits after the decimal point. These depths are measured relative to land surface datum.

17	SBELV1	The depth to the bottom of the first bore hole section.
18	SBELV2	The depth to the bottom of the second bore hole section.
19	SBELV3	The depth to the bottom of the third bore hole section.

Each of the SBELVx fields is DECIMAL NUMERIC with a maximum of twelve characters (including the decimal point) and may have up to two digits after the decimal point. These depths are measured relative to land surface datum.

20	NOCAS	Number of casing sections. A casing section is defined as a length of casing of constant diameter and uniform material.Casing sections are designated numerically from top to bottom of well. INTEGER NUMERIC field containing a value of one or two.
21	TCELV1	The depth to the top of the first section of casing(in feet).
22	TCELV2	The depth to the top of the second section of casing(in feet).
23	TCELV3	The depth to the top of the third section of casing(in feet).

The TCELVx fields are DECIMAL NUMERIC, each with a maximum of twelve characters (including the decimal point) and may have up to two digits after the decimal point. These depths are measured relative to land

* required field

surface datum.

24	BCELV1	The depth to the bottom of the first section of casing,in feet.
25	BCELV2	The depth to the bottom of the second section of casing,in feet.
26	BCELV3	The depth to the bottom of the third section of casing,in feet.

The BCELVx fields are DECIMAL NUMERIC,each with a maximum of twelve characters (including the decimal point) and may have up to two digits after the decimal point. These depths are measured relative to land surface datum.

27	CIDIA1	Inside diameter of the first section of casing,in inches.
28	CIDIA2	Inside diameter of the second section of casing,in inches.
29	CIDIA3	Inside diameter of the third section of casing,in inches.

The CIDIAx fields are DECIMAL NUMERIC,each with a maximum of twelve characters (including the decimal point) and may have up to two digits after the decimal point.

30	CODIA1	Outside diameter of the first section of casing, in inches.
31	CODIA2	Outside diameter of the second section of casing, in inches.
32	CODIA3	Outside diameter of the third section of casing, in inches.

The CODIAx fields are DECIMAL NUMERIC,each with a maximum of twelve characters (including the decimal point) and may have up to two digits after the decimal point.

33	CMATR1	Description or name of casing material from which the first section of casing is made.
34	CMATR2	Description or name of casing material from which the second section of casing is made.

* required field

35 CMATR3

Description or name of casing material from which the third section of casing is made.

The CMATRx fields are ALPHANUMERIC, each with a maximum of eight characters.

OPEN INTERVAL - any portion of the well in which the interior of the well is not isolated from the surrounding soil and rock by unbreached casing.

36 OPTYP

Indicator of the type of opening in the open interval. The field is ALPHANUMERIC, consisting of a single character. The character must be one of the following:

O - open end P - perforated or slotted
S - screened T - sand point
W - walled X - open hole
Z - other

37 TOELV

The depth to the top of the open interval. The TOELV field is DECIMAL NUMERIC with a maximum of twelve characters (including the decimal point) and may have up to two digits after the decimal point. Measured relative to land surface.

38 BOELV

The depth to the bottom of the open interval. The BOELV field is DECIMAL NUMERIC with a maximum of twelve characters (including the decimal point) and may have up to two digits after the decimal point. Measured relative to land surface.

39 OMATR

Description or name of material used to screen the open interval. The OMATR field is ALPHANUMERIC with a maximum of eight characters.

40 OWIDT

Width or short dimension of slot or mesh of screen material for the open interval, in inches. The OWIDT field is DECIMAL NUMERIC with up to twelve characters (including the decimal), and may have up to 3 digits following the decimal point.

41 OLENG

Length or long dimension of slot or mesh of screen material for the open interval, in inches. The OLENG field is DECIMAL NUMERIC with up to twelve characters (including the decimal), and may have up to 3 digits following the decimal point.

FILTER PACK - material placed in the annulus of the well between the borehole wall and the well screen to

* required field

prevent formation material from entering through the well screen.

42 FPMTH — Indicator for method of filter pack placement. Must be ALPHANUMERIC consisting of a single character. The character must be one of the following:

- A - dropping material down the hole and tamping
- B - dropping material down hollow-stem auger
- T - tremie pipe
- O - other

43 FPMAT — Description or name of the material which forms the filter pack. Must be ALPHANUMERIC, consisting of up to eight (8) characters.

44 FPGRN — Grain size of the material which forms the filter pack, in mesh guage. Must be INTEGER NUMERIC, with up to four characters.

45 TFELV — The depth to the top of the filter pack. The TFELV field is DECIMAL NUMERIC with a maximum of twelve characters (including the decimal point) and may have up to two digits after the decimal point. Measured relative to land surface.

46 BFELV — The depth to the bottom of the filter pack. The BFELV field is DECIMAL NUMERIC with a maximum of twelve characters (including the decimal point) and may have up to two digits after the decimal point. Measured relative to land surface.

ANNULAR SEALANT - material used to seal the space between the borehole and the casing of the well. The annular sealant is placed directly above the filter pack to prevent the migration of contaminants to the sampling zone from the surface or intermediate zones and prevent cross contamination between strata.

47 SLMTH — Indicator for method of sealant placement. Must be ALPHANUMERIC consisting of a single character. The character must be one of the following:

- A - dropping material down the hole and tamping
- B - dropping material down hollow-stem auger
- T - tremie pipe
- O - other

48 SLMATR — Description or name of the material which forms the seal above the filter pack against entry of surface water. Must be ALPHANUMERIC, consisting of a single

* required field

character. The character must be one of the following

B - bentonite C - other clay
G - cement Z - other
N -none

49 TSLELV The depth to the top of the annular seal. The TSLELV field is DECIMAL NUMERIC with a maximum of twelve characters (including the decimal point) and may have up to two digits after the decimal point. Measured relative to land surface.

50 BSLELV The depth to the bottom of the annular seal. The BSLELV field is DECIMAL NUMERIC with a maximum of twelve characters (including the decimal point) and may have up to two digits after the decimal point. Measured relative to land surface.

51 SRFSL Surface seal Indicator. Indicates whether or not the upper portion of the borehole is sealed to prevent inflow of surface water. Single character ALPHANUMERIC, containing "Y" if well is sealed. Otherwise contains "N".

52 DNGRAD Downgradient indicator. Indicates whether or not, the well has been installed hydraulically downgradient of the source of potential groundwater pollution, and is capable of detecting the migration of contaminants. Single character ALPHANUMERIC, containing "Y" if well is downgradient from waste disposal site. Otherwise contains "N".

53 DRLOG Drillers log indicator. Indicates availability of drillers log. Single character ALPHANUMERIC, containing "Y" if log is available. Otherwise contains "N".

54 LTHLG Lithologic log indicator. Lithologic log shows distribution of lithology with depth in the bore hole. Single character ALPHANUMERIC, containing "Y" if log is available. Otherwise contains "N".

55 WLUSE * Well use indicator. Must be ALPHANUMERIC, consisting of a single character. The character must be one of the following:

D - domestic (private) water supply
I - industrial water supply
M - monitoring well
P - public water supply
O - other

* required field

56	COMMENT	Supplemental information as needed. May contain up to 80 alphanumeric characters.

* required field

Appendix C

Datafile SAMPLE.DAT

field no.	field name		field Description
1	SAMPLE_KEY	*	Unique sample identifier. Consists of a forty-two character field, left justified, containing:

column:	description:
1-12	Unique site identifier as assigned by EPA. Must be alphanumeric.
13-17	Unique solid waste management unit designator. Must be alphanumeric.
18	Media status indicator. Must contain one of the following: C - compliance monitoring station B - baseline monitoring station A - other ambient monitoring station.
19 - 27	Unique station identifier. Must be alphanumeric.
28 - 42	Unique sample identifier. Must be alphanumeric.

2	DELTH	*	Vertical displacement of sample from the reference elevation (in feet) of the sampling station. For surface water, soils, and groundwater stations this would be the depth of the sample and for air monitoring stations, the height above ground. Must be DECIMAL NUMERIC consisting of a maximum of six characters (including the decimal) and may have up to two digits after the decimal point.
3	DATE	*	Date of sample collection. Eight character integer field consisting of:

columns	content
1-4	year including century, e.g. 1989
5-6	numeric month
7-8	numeric day of month

Column numbers are relative to the beginning of the DATE Field. Each subfield described above must be right justified, and may contain leading zeros.

* required field

4	TIME	*	Time (in military format) of sample collection. INTEGER NUMERIC consisting of four characters.
5	SSTAT	*	Station status or condition. Used primarily for groundwater monitoring stations. ALPHANUMERIC consisting of one character. The character must be one of the following: D - Dry O - obstructed W - Destroyed F - Flowing P - Pumping X - Surficial inflow Z - other
			FIELD MEASUREMENTS
6	TEMP		Sample temperature in degrees Celsius. DECIMAL NUMERIC consisting of six characters (including the decimal) and may have up to two digits after the decimal point.
7	PH		Sample pH in standard units. DECIMAL NUMERIC consisting of four characters (including the decimal) and may have one digit after the decimal point.
8	COND		Specific Conductance in uMhos. INTEGER NUMERIC consisting of a maximum of six characters.
9	TURB		Turbidity. INTEGER NUMERIC consisting of a maximum of eight characters. May be reported in JTU or NTU, as required by program.
10	WLEVEL		Well water level, or stream gage height, in feet. Measured relative to the reference datum. Item is DECIMAL NUMERIC consisting of a maximum of six characters (including the decimal) and may have up to two digits following the decimal point.
11	WINDSP		Wind speed in km/h. DECIMAL NUMERIC consisting of a maximum of six characters (including the decimal), and may have up to two digits after the decimal point.
12	WINDIR		Wind direction in degrees. INTEGER NUMERIC consisting of a maximum of four characters.
13	SAMMETH		Method used to collect sample. ALPHANUMERIC field, left justified, consisting of up to 20 characters.
14	SAMPLER		Name of Agency of Organization that collected the sample. Must be ALPHANUMERIC consisting of up to 20 characters.

* required field

15 COMMENT	Any additional information the user feels necessary, which may not be accomodated in a defined field. Must be ALPANUMERIC consisting of up to 40 characters.

* required field

Appendix D

Datafile PARM.DAT

field no.	field name		field Description
1	PARAM_KEY	*	Unique data record identifier. Consists of a fifty-four character field, left justified, containing:

column:	description:
1-12	Unique site identifier as assigned by EPA. Must be alphanumeric.
13-17	Unique solid waste management unit designator. Must be alphanumeric.
18	Media status indicator. Must contain one of the following: C - compliance monitoring station B - baseline monitoring station A - other ambient monitoring station.
19 - 27	Unique station identifier. Must be alphanumeric.
28 - 42	Unique sample identifier. Must be alphanumeric.
43 - 54	Parameter identifier. For chemical constituents for which CAS numbers exist, the CAS number will be the identifier. For other constituents, the identifier will be determined on an as-needed basis.
55 - 58	Replicate number. Identifies the value as one of two or more analyitical results for the same parameter on the same sample. INTEGER NUMERIC, right justified, up to four characters. Not used unless replicate results are reported.

2	QUALF		Qualifier field. ALPHANUMERIC, may contain up to four STORET qualifier codes.
3	VALUE	*	The reported analytical result for the chemical. Must be DECIMAL NUMERIC, consisting of up to twelve character (including the decimal), and may have up to

* required field

four digits after the decimal point.

4	UNITS	*	The units of measurement in which analytical results are reported. ALPHANUMERIC, consisting of up to six characters.
5	METHOD		The name or code of the analytical method or technique used to obtain the reported value. ALPHANUMERIC, containing up to fourteen characters.
6	DATE	*	Date of analysis. Eight character integer field consisting of:

columns	content
1-4	year including century, e.g. 1989
5-6	numeric month
7-8	numeric day of month

Column numbers are relative to the beginning of the DATE Field. Each subfield described above must be right justified, and may contain leading zeros.

7	DETLIM	Detection limit. Must be in same units as the reported value. Must be DECIMAL NUMERIC, consisting of up to twelve characters (including the decimal), and may have up to four digits after the decimal point.
8	LAB	Name of Lab that performed the analysis. ALPHANUMERIC field containing up to 28 characters.
9	COMMENT	Any additional information the user feels necessary, which may not be accomodated in a defined field. Must be ALPANUMERIC consisting of up to 40 characters.

* required field

EPA LOCATIONAL DATA POLICY

EPA's Officer of Information Resources Mangement (OIRM) has developed a policy to be adopted by EPA, and its delegates and representatives, for collecting and documenting locational data about the entities tracked under Federal Environmental programs within EPA's juridiction. The policy clearly defines responsibilities for obtaining locational measurements for all facilities, sites and monitoring and observation points of primary interest to EPA. In addition, the policy explicitly specifies latitude and longitude, in an intentionally-compatible format, as the Agency's preferred locational coordinate system. Implementation of this policy will allow Agency data to be intergrated based upon location, thereby promoting enhanced use of EPA's extensive data resources for cross-media environmental analyses and management decisions.

1. PURPOSE. This policy establishes the principles for collecting and documenting latitude/longitude coordinates for facilities, sites and monitoring and observation points regulated or tracked under Federal environmental programs within the jurisdiction of the Environmental Protection Agency (EPA). The intent of this policy is to extend environmental analyses and allow data to be integrated based upon location, thereby promoting the enhanced use of EPA's extensive data resources for cross-medial environmental analyses and management decisions. This policy underscores EPA's commitment to establishing the data infrastructure necessary to enable data sharing and secondary data use.

2. SCOPE AND APPLICABILITY. This policy applies to all Environmental Protection Agency (EPA) organizations and personnel of agents (including contractors and grantees) of EPA who design, develop, compile, operate or maintain EPA information collections developed for environmental program support. The requirements of this policy apply to existing as well as new data collections.

3. BACKGROUND.

   a. Fulfillments of EPA's mission to protect and improve the environment depends upon improvements in cross-programmatic, multi-media data analyses. A need for available and reliable location identification information is a commonality which all regulatory tracking programs share.

b. This policy serves as a framework for collecting and documenting location identification data. It does not include a requirement that a particular level of precision or accuracy be achieved; managers of individual data collection efforts determine the levels precision and accuracy necessary to support their mission. However, this policy does serve as a starting point for acquiring these critical data.

c. To implement this policy, program data managers must collect and document the following:

(1) Latitude/longitude coordinates in accordance with Federal Interagency Coordinating Committee for Digital Cartigraphy (FICCDC) recommendations. The coordinates may be present singly or multiple times, to define a point, line or area, according to the most appropriate data type for the entry being represented.

This format for representing this information is:

+/-DD MM SS.SSSS (latitude)
+/-DDD MM SS.SSSS (longitude)

where:

- Latitude is always presented before longitude
- DD represents degrees of latitude; a digit decimal number ranging from 00 through 90
- DDD represents degrees of longitude; a three digit decimal number ranging from 000 through 180
- MM represents minutes of latitude or longitude, a two-digit decimal number ranging from 00 through 60
- SS.SSSS represents seconds of latitude or longitude, with a format allowing possible precisions to the ten-thousandths of seconds. (actual accuracy to be program and case specific)
- + specifies <u>latitudes north</u> of the equator and <u>logitudes east</u> of the prime meridian
- - speicifies <u>latitudes south</u> of the equator and <u>longitudes west</u> of the prime meridian

Interchange File Format
for
Electronic Data Reports

This document establishes, for EPA Region IV, the required format for electronic reporting of monitoring data.

Data will be transported as a set of four ASCII files:

STATION.DAT	-	contains basic information about monitoring station location and type. Detailed description of the structure is contained in appendix A.
WELL.DAT	-	contains detailed information about construction and characteristics of groundwater monitoring stations. See appendix B.
SAMPLE.DAT	-	contains basic information about the collection and characteristics of samples. See appendix C.
PARM.DAT	-	contains measured values and reporting units for specific parameters. See appendix D.

The first line of EACH of the four files MUST contain the following text starting in position one: 19901001

These files are to be transmitted in ASCII format using 5.25 inch flexible disk, nine-track magnetic tape (1600 or 6250 bpi) or, in the future, via communications channels yet to be defined. Hardcopy reporting requirements will continue as currently required until further notice. Additional files may be defined in the future for non-groundwater station types should the need arise.

Several of these files will contain data that is usually static in nature. For example, the basic information contained in STATION.DAT will not normally change for any single station, therefore once the data has been submitted for a particular station, it will not be required to resubmit that information. If, however, the station record is updated or corrected the record would have to be resubmitted. After the initial report then, STATION.DAT would be submitted only when new stations are created, or when an old station record is modified, and need only contain the new or modified records. The same is true of file WELL.DAT. SAMPLE.DAT would, of course, be submitted each time one or more new samples were to be reported, or any sample record required updating. Again, the file need only contain the new or updated records. PARM.DAT is expected to be submitted at each required reporting interval, since it will contain the

Datafile STATION.DAT

field #	field name	field Description
1	STATION_KEY *	Unique station identifier. Consists of a twenty-seven character alphanumeric field, left justified, containing:

column:	description:
1-12	Unique site identifier as assigned by EPA. Must be alphanumeric.
13-17	Unique solid waste management unit designator. Must be alphanumeric.
18	Media status indicator. Must contain one of the following: C - compliance monitoring station B - baseline monitoring station A - other ambient monitoring station.
19 - 27	Unique station identifier. Must be alphanumeric.

If this data is to be used with the Region IV Query menu, the naming convention recomended for stations is as follows. Monitoring wells should contain 'MW',test pits 'TP',boreholes 'BH', surface soil 'SS'.

2	TYPE *	Type of monitoring station. Consists of a four-character alphanumeric field, left justified, containing one of the following: AIR, SWTR, GWTR, SOIL, SED, and SLDG. The meanings of these abbreviations are as follows: AIR - Air sampling station SWTR - Surface water sampling station GWTR - ground water sampling station SOIL - soil sampling station SED - Stream bed sediment SLDG - process sludge sampling
3	LATITUDE *	Geographic position of the station in degrees north of the equator. Must be in the format DDMMSS.xxxx, where DD represents degrees, MM represents minutes, and SS.xxxx represents seconds, with available precision to four decimal places.
4	LONGITUDE *	Geographic position of the station in degrees

* required field

which may not be accomodated in a defined field. Must be ALPANUMERIC consisting of up to 40 characters.

* required field

A - air	M - other mud
B - bentonite	N - none
W - water	O - other fluid

6 DVMTH

Method by which well was developed. Must be ALPHANUMERIC, consisting of a single character. The character must be one of the following:

A - air lift pump	B - bailed
C - compressed air	J - jetted
P - other pump	S - surged
Z - other method	N - none

7 DVHRS

Time in hours during which well was developed. Must be INTEGER NUMERIC, consisting of up to 5 digits.

8 SPLTRT

Any special treatment that was applied during the well development process. Must be ALPHANUMERIC, consisting of a single character, which must be one of the following:

C - chemicals	D - dry ice
E - explosives	F - deflocculant
H - hydrofracturing	M - mechanical
Z - other	N - none

9 LIFT

Type of lift indicator. Must be Alphanumeric, consisting of a single character. The character must be one of the following:

A - air lift	R - rotary pump
B - bucket	S - submersible pump
C - centrifugal pump	T - turbine
J - jet pump	U - unknown
P - Piston pump	Z - other

10 NOSEG

Number of bore hole sections. A bore hole section is defined as a length of bore hole of constant diameter. Bore hole sections are designated numerically from top to bottom of bore hole. INTEGER NUMERIC field containing a value of one or two.

11 SGDIA1

Diameter of first bore hole section, in inches.

12 SGDIA2

Diameter of second bore hole section, in inches.

13 SGDIA3

Diameter of third bore hole section, in inches.

Each of the SGDIAx fields is DECIMAL NUMERIC, containing up to twelve characters (including the

required field

		surface datum.
24	BCELV1	The depth to the bottom of the first section of casing,in feet.
5	BCELV2	The depth to the bottom of the second section of casing,in feet.
26	BCELV3	The depth to the bottom of the third section of casing,in feet.
		The BCELVx fields are DECIMAL NUMERIC,each with a maximum of twelve characters (including the decimal point) and may have up to two digits after the decimal point. These depths are measured relative to land surface datum.
27	CIDIA1	Inside diameter of the first section of casing,in inches.
28	CIDIA2	Inside diameter of the second section of casing,in inches.
29	CIDIA3	Inside diameter of the third section of casing,in inches.
		The CIDIAx fields are DECIMAL NUMERIC,each with a maximum of twelve characters (including the decimal point) and may have up to two digits after the decimal point.
30	CODIA1	Outside diameter of the first section of casing, in inches.
31	CODIA2	Outside diameter of the second section of casing, in inches.
32	CODIA3	Outside diameter of the third section of casing, in inches.
		The CODIAx fields are DECIMAL NUMERIC,each with a maximum of twelve characters (including the decimal point) and may have up to two digits after the decimal point.
33	CMATR1	Description or name of casing material from which the first section of casing is made.
34	CMATR2	Description or name of casing material from which the second section of casing is made.

required field

prevent formation material from entering through the well screen.

42 FPMTH — Indicator for method of filter pack placement. Must be ALPHANUMERIC consisting of a single character. The character must be one of the following:

- A - dropping material down the hole and tamping
- B - dropping material down hollow-stem auger
- T - tremie pipe
- O - other

43 FPMAT — Description or name of the material which forms the filter pack. Must be ALPHANUMERIC, consisting of up to eight (8) characters.

44 FPGRN — Grain size of the material which forms the filter pack, in mesh guage. Must be INTEGER NUMERIC, with up to four characters.

45 TFELV — The depth to the top of the filter pack. The TFELV field is DECIMAL NUMERIC with a maximum of twelve characters (including the decimal point) and may have up to two digits after the decimal point. Measured relative to land surface.

46 BFELV — The depth to the bottom of the filter pack. The BFELV field is DECIMAL NUMERIC with a maximum of twelve characters (including the decimal point) and may have up to two digits after the decimal point. Measured relative to land surface.

ANNULAR SEALANT - material used to seal the space between the borehole and the casing of the well. The annular sealant is placed directly above the filter pack to prevent the migration of contaminants to the sampling zone from the surface or intermediate zones and prevent cross contamination between strata.

47 SLMTH — Indicator for method of sealant placement. Must be ALPHANUMERIC consisting of a single character. The character must be one of the following:

- A - dropping material down the hole and tamping
- B - dropping material down hollow-stem auger
- T - tremie pipe
- O - other

48 SLMATR — Description or name of the material which forms the seal above the filter pack against entry of surface water. Must be ALPHANUMERIC, consisting of a single

* required field

56	COMMENT	Supplemental information as needed. May contain up to 80 alphanumeric characters.

* required field

4 TIME * Time (in military format) of sample collection. INTEGER NUMERIC consisting of four characters.

5 SSTAT * Station status or condition. Used primarily for groundwater monitoring stations. ALPHANUMERIC consisting of one character. The character must be one of the following:

D - Dry	F - Flowing
O - obstructed	P - Pumping
W - Destroyed	X - Surficial inflow

Z - other

FIELD MEASUREMENTS

6 TEMP Sample temperature in degrees Celsius. DECIMAL NUMERIC consisting of six characters (including the decimal) and may have up to two digits after the decimal point.

7 PH Sample pH in standard units. DECIMAL NUMERIC consisting of four characters (including the decimal) and may have one digit after the decimal point.

8 COND Specific Conductance in uMhos. INTEGER NUMERIC consisting of a maximum of six characters.

9 TURB Turbidity. INTEGER NUMERIC consisting of a maximum of eight characters. May be reported in JTU or NTU, as required by program.

10 WLEVEL Well water level, or stream gage height, in feet. Measured relative to the reference datum. Item is DECIMAL NUMERIC consisting of a maximum of six characters (including the decimal) and may have up to two digits following the decimal point.

11 WINDSP Wind speed in km/h. DECIMAL NUMERIC consisting of a maximum of six characters (including the decimal), and may have up to two digits after the decimal point.

12 WINDIR Wind direction in degrees. INTEGER NUMERIC consisting of a maximum of four characters.

13 SAMMETH Method used to collect sample. ALPHANUMERIC field,left justified, consisting of up to 20 characters.

14 SAMPLER Name of Agency of Organization that collected the sample. Must be ALPHANUMERIC consisting of up to 20 characters.

* required field

Appendix D

Datafile PARM.DAT

field #	field name		field Description
1	PARAM_KEY	*	Unique data record identifier. Consists of a fifty-four character field, left justified, containing:

column:	description:
1-12	Unique site identifier as assigned by EPA. Must be alphanumeric.
13-17	Unique solid waste management unit designator. Must be alphanumeric.
18	Media status indicator. Must contain one of the following: C - compliance monitoring station B - baseline monitoring station A - other ambient monitoring station.
19 - 27	Unique station identifier. Must be alphanumeric.
28 - 42	Unique sample identifier. Must be alphanumeric.
43 - 54	Parameter identifier. For chemical constituents for which CAS numbers exist, the CAS number will be the identifier. For other constituents, the identifier will be determined on an as-needed basis.
55 - 58	Replicate number. Identifies the value as one of two or more analyitical results for the same parameter on the same sample. INTEGER NUMERIC, right justified, up to four characters. Not used unless replicate results are reported.

2	QUALF		Qualifier field. ALPHANUMERIC, may contain up to four STORET qualifier codes.
3	VALUE	*	The reported analytical result for the chemical. Must be DECIMAL NUMERIC, consisting of up to twelve character (including the decimal), and may have up to

required field

Appendix F

Preliminary Checklist of Federal ARARs

Chemical-Specific ARARs Checklist
Federal Requirements

NCBC Gulfport
Gulfport, Mississippi

Requirements	Is this an ARAR? Yes	Is this an ARAR? No	Comments
1. SDWA - Maximum Contaminant Levels (MCLs) (40 CFR 141)	✓	—	Final or proposed MCLs exist for groundwater contaminants.
2. CAA - National Ambient Air Quality Standards (NAAQS) (40 CFR 50)	✓	—	NAAQS for particulate matter may be considered during assessment of soil removal options.
3. RCRA - Alternative Concentration Levels (ACLs)	—	✓	MCLs and risk-based levels will be used as target levels instead of ACLs. ACLs are not applicable.

Chemical-Specific ARARs Checklist (continued)
Federal Criteria, Advisories, and Guidance (FCAG)

NCBC Gulfport
Gulfport, Mississippi

FCAG	Is this an FCAG? Yes	Is this an FCAG? No	Comments
1. Maximum Contaminant Level Goals (MCLGs)	✓		MCLs are the relevant and appropriate clean-up levels. MCLGs are ARARs unless MCLG is zero.
2. Federal Ambient Water Quality Criteria (AWQC)	✓		AWQC exist for groundwater (which may recharge in the wetland) and surface water contaminants.
3. TSCA Section 8D Health and Safety Data	✓		Will be evaluated during risk assessment.
4. Health Advisories (EPA Office of Drinking Water)	✓		Will be considered for drinking water exposures.
5. TSCA Chemical Advisories/Fact Sheets		✓	Provide qualitative toxicological information on chemical; not applicable here.
6. EPA Risk Reference Doses (RfD)	✓		Intended for use in quantitative public health evaluation of remedial alternatives, if adequate data exist.
7. EPA Carcinogen Assessment Group Potency Factors	✓		Potency factors may be used to develop target soil cleanup levels.
8. Acceptable Intake - Chronic (AIC) and Subchronic (AIS) - EPA Health Assessment Documents		✓	Intended for use in quantitative public health evaluation of remedial alternatives, if adequate data exist.
9. Pesticide Registration Data	✓		Will be reviewed, where available.
10. EPA Office of Water Guidance - Water-Related Environmental Fate of 129 Priority Pollutants (1979)	✓		Transport and fate of pollutants will be assessed.
11. TSCA - Polychlorinated Biphenyls Spill Cleanup Policy (40 CFR 761, Subpart G; 761.120 - 761.135)	✓		Not usually applicable to CERCLA sites, but standard may be considered relevant and appropriate or used as guideline.

Location-Specific ARARs Checklist
Federal Requirements

NCBC Gulfport
Gulfport, Mississippi

Requirements	Does this ARAR apply to existing site conditions? Yes	No	Comments
1. CWA - 40 CFR Part 404	✓		Will be considered for alternatives that affect wetlands.
2. NEPA - 40 CFR Part 6		✓	Preparation of RI/FS incorporates the requirements of NEPA.
3. Endangered Species Act (16 U.S.C. 1531, 50 CFR Parts 81, 225, 402)	tbd		Presence of threatened or endangered species will be evaluated during the RI.
4. Wild and Scenic Rivers Act (16 U.S.C. 1271)		✓	Not applicable.
5. Fish and Wildlife Coordination Act (16 U.S.C. 661 note)	tbd		Applicability to be determined during the RI.
6. Fish and Wildlife Conservation Act (16 U.S.C. 2901, 50 CFR Part 83)	tbd		Applicability to be determined during the RI.
7. Coastal Zone Management Act (16 U.S.C. 1451, 15 CFR Part 930, 923.45)	✓		Will be considered since facility is in a coastal region.
8. Historic Sites, Buildings, and Antiquities Act (16 U.S.C. 461)	tbd		Applicability to be determined during the RI.
9. National historic Preservation Act (16 U.S.C. 470)	tbd		Applicability to be determined during the RI.
10. Protection of Archeological Resources (32 CFR Part 229, 229.4; 43 CFR Parts 107, 107.1 - 171.500)	tbd		Will be considered during the excavation activities.

Note: tbd = to be determined.

Location-Specific ARARs Checklist (Continued)
Federal Requirements

NCBC Gulfport
Gulfport, Mississippi

FCAG	Do these FCAGs apply to existing site conditions? Yes	No	Comments
1. FWS, NWFS Advisories (Under Fish and Wildlife Coordination Act)	✓	—	Requirements addressed in CWA Section 404.
2. Floodplains Executive Order (11988)	tbd	—	Requirements will also be addressed in CWA Section 404.
3. Wetlands Executive Order (11990)	tbd	—	Requirements will also be addressed in CWA Section 404.
4. Federal Sole-Source Aquifer Requirements	—	✓	Not applicable.

Note: tbd = to be determined.

Action-Specific ARARs Checklist (Continued)
Federal Requirements

NCBC Gulfport
Gulfport, Mississippi

Requirement	Is this an ARAR? Yes	No	Comments
1. RCRA - Standards for Owners and Operations of Permitted Hazardous Waste Facilities (40 CFR 264.10 - 264.18)	✓	—	Applicable or relevant and appropriate RCRA Requirements will be identified and considered during the evaluation of remedial alternatives.
2. RCRA - Preparedness and Prevention (40 CFR 264.30 - 264.37)	✓	—	
3. RCRA - Contingency Plan and Emergency Procedures (40 CFR 264.50 - 264.56)	✓	—	
4. RCRA - Manifesting, Recordkeeping, and Reporting (40 CFR 264.70 - 264.77)	✓	—	
5. RCRA - Groundwater Protection (40 CFR 264.90 - 264.109)	✓	—	
6. RCRA - Closure and Post-Closure (40 CFR 264.110 - 264.120)	✓	—	Applicable to site closure.
7. RCRA - Surface Impoundments (40 CFR 264.220 - 264.249)	tbd	—	Applicability will be determined during the development of remedial alternatives.
8. RCRA - Waste Piles (40 CFR 264.250 - 264.269)	tbd	—	Applicability will be determined during the development of remedial alternatives.
9. RCRA - Land Treatment (40 CFR 264.270 - 264-.299)	tbd	—	Applicability will be determined during the development of remedial alternatives.
10. RCRA - Landfills (40 CFR 264.300 - 264.339)	tbd	—	Applicability will be determined during the development of remedial alternatives.
11. RCRA - Incinerators (40 CFR 264.340 - 264.999)	tbd	—	Applicable to alternatives involving incineration.
12. CWA - 40 CFR Parts 122, 125, 403, and 404	tbd	—	Will be considered when remedial alternatives include discharges to surface water.
13. TSCA - Manufacturing, Processing, Distribution in Commerce, Use of PCBs and PCB Items (40 CFR 761.60 - 761.79)	✓	—	Will be considered during remediation of PCB-contaminated areas.
14. TSCA - Markings of PCBs and PCB Items (40 CFR 761.40 - 761.79)	✓	—	Will be considered during remediation of PCB-contaminated areas.
15. TSCA - Storage and Disposal (40CFR 761.60 - 761.79)	✓	—	Governs responses to soil contaminated with PCBs at 50 ppm or greater. Will be considered during evaluation of soil remedial alternatives.
16. TSCA - Records and Reports (40 CFR 761.-180 - 761.185, also 40 CFR 129.105, 750)	✓	—	Will be considered during remediation of PCB-contaminated areas.

Note: tbd = to be determined.

Action-Specific ARARs Checklist (Continued)
Federal Requirements

NCBC Gulfport
Gulfport, Mississippi

	Requirement	Is this an ARAR? Yes	No	Comments
17.	CAA - National Air Quality Standards for Particulate Matter (40 CFR 50)	✓	—	Will be considered for soil removal options.
18.	OSHA - General Industry Standards (29 CFR Part 1910)	✓	—	OSHA requirements will be complied with during implementation of onsite remedial alternatives.
19.	OSHA - Safety and Health Standards for Federal Service Contracts (29 CFR Part 1926)	✓	—	
20.	OSHA - Recordkeeping, Reporting, and Related Regulations	✓	—	
21.	DOT Rules for the Transportation of Hazardous Materials (49 CFR Parts 107, 171.1 - 171.500)	✓	—	Will be complied with the remedial alternatives requiring transportation of hazardous materials off-site.
22.	Rivers and Harbors Act (33 CFR Parts 320-329)	—	✓	Not applicable.
23.	Guidelines for Specifications of Disposal Sites for Dredged or Fill Material (40 CFR 230)	—	✓	Not applicable.
24.	Denial or Restriction of Disposal Sites (40 CFR 231)	—	✓	Not applicable.
25.	Ocean Dumping Regulations (40 CFR 220-229)	—	✓	Not applicable.
26.	Disposal of Waste Material Containing TCDD (40 CFR 775.180 - 775.197)	—	✓	Not applicable.
27.	Federal Insecticide, Fungicide, and Rodenticide Act (FIFRA) and Regulations (40 CFR Part 165)	✓	—	Applicable or relevant and appropriate to pesticides.

Note: tbd = to be determined.

Action-Specific ARARs Checklist (Continued)
Federal Criteria, Advisories, and Guidance (FCAG)

NCBC Gulfport
Gulfport, Mississippi

Requirement	Is this an FCAG? Yes	No	Comments
1. EPA's Groundwater Protection Strategy	✓		To be considered during remedial design.
2. TSCA Compliance Policy	✓		To be considered during remedial design.
3. Waste Load Allocation Procedures (EPA Office of Water)		✓	Not applicable.
U.S. EPA RCRA Design Guidelines			
A. EPA's RCRA Design Guidelines			
1. Surface Impoundments, Liner Systems, Final Cover and Freeboard Control	tbd		These RCRA design guidelines will be considered if these types of facilities will be constructed.
2. Waste Pile Design - Liner Systems	tbd		
3. Land Treatment Units	tbd		
4. Landfill Design - Liner Systems and Final Cover	tbd		
B. Permitting Guidance Manuals			
1. Permit Applicants' Guidance Manual for Hazardous Waste Land Treatment, Storage and Disposal Facilities		✓	These permit guidance manuals are not applicable because permits are not required for onsite actions. Remedial actions taken off-site and discharges occurring off-site (e.g., discharges to surface water from groundwater treatment remedial actions) must comply with all requirements, including obtaining proper federal and state permits. In addition, the contents of the Subpart F Guidance Manual will be reviewed during the development of any proposed groundwater monitoring program.
2. Permit Writers' Guidance Manual for Hazardous Waste Land Treatment, Storage and Disposal Facilities		✓	
3. Permit Writer's Guidance Manual for Subpart F		✓	
4. Permit Applicants' Guidance Manual for General Facility Standards		✓	
5. Waste Analysis Plan Guidance Manual		✓	
6. Permit Writers' Guidance Manual for Hazardous Waste Tanks		✓	
7. Model Permit Application for Existing Incinerators		✓	
8. Guidance Manual for Evaluating Permit Applications for the Operation of Hazardous Waste Incinerator Units		✓	
9. A Guide for Preparing RCRA Permit Applications for Existing Storage Facilities		✓	
10. Guidance Manual on Closure and Post-Closure Interim Status Standards		✓	

Action-Specific ARARs Checklist (Continued)
Federal Criteria, Advisories, and Guidance (FCAG)

NCBC Gulfport
Gulfport, Mississippi

Requirement	Is this an FCAG? Yes	No	Comments
Note: tbd = to be determined.			
C. Technical Resource Documents			
1. Evaluating Cover Systems for Solid and Hazardous Waste	tbd	—	Technical resource and guidance documents are not considered directly applicable; however, their content may be used as guidance for some alternatives.
2. Hydrologic Simulation of Solid Waste Disposal Sites	tbd	—	
3. Landfill and Surface Impoundment Performance Evaluation	tbd	—	
4. Lining of Water Impoundments and Disposal Facilities	tbd	—	
5. Test methods for Evaluating Solid Wastes	tbd	—	
6. A Method for Determining the Compatibility of Hazardous Wastes	tbd	—	
7. Guidance Manual on Hazardous Waste Compatibility	tbd	—	
EPA Office of Water Guidance Documents			
A. Pretreatment Guidance Documents			
1. 304(G) Guidance Document Revised Pre-treatment Guidelines	tbd	—	
B. NPDES Guidance Documents	tbd	—	
1. NPDES Best Management Practices Guidance Manual (6/81)	tbd	—	
2. Case Studies on Toxicity Reduction Evaluation (5/83)	tbd	—	
C. Groundwater/UIC Guidance Document			
USEPA Manuals from the Office of Research and Development			
1. EW 846 Methods - Laboratory Analytical Methods	✓	—	Established lab methods and protocols will be followed during all chemical analysis.
2. Lab Protocols Developed Pursuant to Clean Water Act 304(h)	✓	—	

Note: tbd = to be determined.

APPENDIX G

Appendix G

Federal Water Quality Standards and Criteria

Federal Water Quality Standards and Criteria

NCBC Gulfport
Gulfport, Mississippi

	Federal Primary Drinking Water MCL[1] (µg/ℓ)	Federal Primary Drinking Water MCLG[1] (µg/ℓ)	Federal AWQC Aquatic Organisms[2] (µg/ℓ)	Federal AWQC Human Health[3] (µg/ℓ)	Federal Secondary Drinking Water MCL[6] (µg/ℓ)
VOLATILE ORGANIC COMPOUNDS					
Chloromethane				0(0.19)	
Bromomethane				0(0.19)	
Vinyl Chloride	2	0		0(2.0)	
Chloroethane			IND	IND	
Methylene chloride			11,000[a]	0(0.19)	
Acetone					
Carbon disulfide					
1,1-Dichloroethene	7	7	11,600[a]	0(0.003)	
1,1-Dichloroethane					
Cis-1,2-Dichloroethene	70[4]	70	IND	IND	
Trans-1,2-Dichloroethene	100[4]	100			
Chloroform	100[5]		1,240[b]	0(0.19)	
1,2-Dichloroethane	5	0	20,000	0(0.94)	
2-Butanone					
1,1,1-Trichloroethane	200	200	18,000	18,400	
Carbon tetrachloride	5	0	35,200[a]	0(0.4)	
Vinyl acetate					
Bromodichloromethane	100[5]		11,000[a]		
1,2-Dichloropropane	5	0	5,700[b]	IND	
Trans-1,3-Dichloropropene			244[b]	87	
Trichloroethene	5	0	21,900[b]	0(2.78)	
Dibromochloromethane	100		11,000[a]	0(0.19)	
1,1,2-Trichloroethane			9,400[b]	0(0.6)	
Benzene	5	0	5,300[a]	0(0.66)	
Cis-1,3-Dichloropropene			244[b]	87	
2-Chloroethylvinyl ether					
Bromoform	100[5]		11,000[a]		
4-Methyl-2-Pentanone					
2-Hexanone					
Tetrachloroethene	5[5]	0	840[b]	0(0.80)	

Federal Water Quality Standards and Criteria

NCBC Gulfport
Gulfport, Mississippi

	Federal Primary Drinking Water MCL[1] (μg/ℓ)	Federal Primary Drinking Water MCLG[1] (μg/ℓ)	Federal AWQC Aquatic Organisms[2] (μg/ℓ)	Federal AWQC Human Health[3] (μg/ℓ)	Federal Secondary Drinking Water MCL[6] (μg/ℓ)
1,1,2,2-Tetrachloroethane			9,320[a]	0(0.17)	
Toluene	1,000[4]	1,000	17,500[a]	18,3000	
Ethyl benzene	700[4]	700	3,200[a]	14,000	
Chlorobenzene	100[4]	100	50[b]	488	
Styrene	100[4]	100			
Xylenes (Total)	10,000[4]	10,000			
INORGANIC COMPOUNDS					
Aluminum			87[a]	146	50 to 200
Antimony			1,600[b]		
Arsenic	50	50	190[a]	0.0022	
Asbestos	7×10^6(f/ℓ)[7]	7×10^6(f/ℓ)[7]			
Barium	1,000[4]	1,000[4]		1,000	
Beryllium			5.3[b]	0(0.0068)	
Cadmium	5[4]	5	1.1[c]	10	
Calcium					
Chromium (total)	100[4]	100			
Chromium VI	50	12	11	50	
Chromium III			210[c]	170,000	
Cobalt					
Copper		1,300	12[a]	1,000[f]	1,000
Cyandie, total					
Fluoride	4,000	4,000			2,000
Iron			1,000	200	3,000
Lead	5[4]	0	3.2[c]		
Magnesium				50	
Manganese				50	50
Mercury	2[4]	2	0.012[a]	0.144	
Nitrate (as N)	10,000				
Nitrite (as N)	1,000[4]				
Total Nitrate + Nitrite	10,000[4]				
Nickel			160[c]	13.4	

Federal Water Quality Standards and Criteria

NCBC Gulfport
Gulfport, Mississippi

	Federal Primary Drinking Water MCL[1] (μg/ℓ)	Federal Primary Drinking Water MCLG[1] (μg/ℓ)	Federal AWQC Aquatic Organisms[2] (μg/ℓ)	Federal AWQC Human Health[3] (μg/ℓ)	Federal Secondary Drinking Water MCL[6] (μg/ℓ)
Potassium					
Selenium	50[4]	50	5[a]	10	
Silver	50		0.12[a]	50	100
Sodium					
Thallium			40[b]	13	
Vanadium					
Zinc			110[c]	5,000[f]	5,000
SEMIVOLATILE ORGANIC COMPOUNDS					
3-Nitroaniline				0.0028	
Acenaphthene			520[b]	70	
2,4-Dinitrophenol					
4-Nitrophenol					
Dibenzofuran					
2,4-Dinitrotoluene				0(0.11)	
Diethylphthalate				434,000	
4-Chlorophenyl-phenylether					
Fluorene				0.0028	
4-Nitroaniline					
4,6-Dinitro-2-methylphenol					
N-Nitrosodiphenylamine				0(4.9)	
4-Bromophenyl-phenylether					
Hexachlorobenzene			50[b]	0.021	
Pentachlorophenol	1	0	13[a]	1010	
Phenanthrene				0.0031	
Anthracene			6.3[d]	0.0031	
Di-n-butylphthalate				34,000	
Fluoranthene			3,980[a]	42	
Pyrene				0.0028	
Butylbenzylphthalate					
3,3'-Dichlorobenzidine				470	
Benzo(a)Anthracene				0.0028	

Federal Water Quality Standards and Criteria

NCBC Gulfport
Gulfport, Mississippi

	Federal Primary Drinking Water MCL[1] (μg/ℓ)	Federal Primary Drinking Water MCLG[1] (μg/ℓ)	Federal AWQC Aquatic Organisms[2] (μg/ℓ)	Federal AWQC Human Health[3] (μg/ℓ)	Federal Secondary Drinking Water MCL[6] (μg/ℓ)
Chrysene				0.0028	
bis(2-Ethylhexyl)phthalate			3[b]		
Di-n-octylphthalate					
Benzo(b)Fluoranthene				0(0.0028)	
Benzo(k)Fluoranthene				0(0.0028)	
Benzo(a)Pyrene				0(0.0028)	
Indeno(1,2,3-cd)pyrene				0(0.0028)	
Dibenz(a,h)anthracene				0(0.0028)	
Benzo(g,h,i)perylene				0(0.0028)	
Phenol			2,560[b]	3,500	
bis(2-Chloroethyl)ether				0(30 ng/ℓ)	
2-Chlorophenol			2,000[b]	0.1[f]	
1,3-Dichlorobenzene	600[4]	650	763[b]	400	
1,2-Dichlorobenzene	600[4]	600	730[b]	400	
1,4-Dichlorobenzene	600[4]	600	763[b]	400	
Benzyl alcohol					
2-Methylphenol					
bis(2-Chloroisopropyl)ether				34.7	
4-Methylphenol					
N-Nitroso-di-n-propylamine					
Hexachloroethane			5,850[b]	0(1.9)	
Nitrobenzene			27,000	19,800	
Isophorone			117,500[a]	5,200	
2-Nitrophenol					
2,4-Dimethylphenol			2,120[a]	400[f]	
Benzoic acid					
bis(2-Chloroethoxy)methane					
2,4-Dichlorobenzene			763[b]	3,090	
Naphthalene			920[b]	IND	
4-Chloroaniline					
Hexacholorobutadiene			9.3[b]	0(0.45)	

Federal Water Quality Standards and Criteria

NCBC Gulfport
Gulfport, Mississippi

	Federal Primary Drinking Water MCL[1] (μg/ℓ)	Federal Primary Drinking Water MCLG[1] (μg/ℓ)	Federal AWQC Aquatic Organisms[2] (μg/ℓ)	Federal AWQC Human Health[3] (μg/ℓ)	Federal Secondary Drinking Water MCL[6] (μg/ℓ)
4-Chloro-3-Methylphenol			30[a]	3,000	
2-Methylnaphthalene				0.0028	
Hexachlorocyclopentadiene			5.2[b]	206	
2,4,6-Trichlorophenol			970[b]	0(1.8)	
2,4,5-Trichlorophenol				2,600	
2-Chloronaphthalene			IND	IND	
2-Nitroaniline					
Dimethylphthalate				350,000	
Acenaphthylene				0.0028	
2,6-Dinitrotoluene					
PESTICIDES/PCB COMPOUNDS					
Alachlor	2[4]	0			
Atrazine	3[4]	3			
Carbonfuran	40[4]	40			
Dibromochloropropane	0.2[4]	0			
2,4-D	70[4]	70			
Ethylene dibromide	0.05[4]	0			
2,4,5-TP	50[4]	50			
alpha-BHC			100[a]	0.073	
beta-BHC				0.0233	
delta-BHC	0.2	0	IND	IND	
gamma-BHC (lindane)	0.2[4]	0.2		0.0174	
Heptachlor	0.4[4]	0	0.0038[a]	0.0011	
Aldrin			3.0[d]		
Heptachlor epoxide	0.2[4]	0			
Endosulfan I		0.056[d]	138		
Dieldrin		0.0019[d]	0(1.1 ng/ℓ)		
4,4'-DDE		1,050[a]			
Endrin	0.2	0.0023[d]	1	1	
Endosulfan II					
4,4'-DDD					

Federal Water Quality Standards and Criteria

NCBC Gulfport
Gulfport, Mississippi

	Federal Primary Drinking Water MCL[1] (µg/ℓ)	Federal Primary Drinking Water MCLG[1] (µg/ℓ)	Federal AWQC Aquatic Organisms[2] (µg/ℓ)	Federal AWQC Human Health[3] (µg/ℓ)	Federal Secondary Drinking Water MCL[6] (µg/ℓ)
Endrin Aldehyde		0.001[d]			
Endosulfan sulfate					
4,4'-DDT			0.001[d]	0(1.2 ng/ℓ)	
Methoxychlor	40	40			
Endrin ketone					
Chlordane	2[4]	0	0.0043[d]	0(0.022)	
Toxaphene	3[4]	0	0.0002[e]	0(0.026)	
Aroclor-1016				0(>0.0126)	
Aroclor-1221				0(>0.0126)	
Aroclor-1232				0(>0.0126)	
Aroclor-1242				0(>0.0126)	
Aroclor-1248				0(>0.0126)	
Aroclor-1254				0(>0.0126)	
Aroclor-1260				0(>0.0126)	
PCBs (total)	0.5[4]	0	0.014[e]		

[1]From 40 CFR 161, revised by 56 Federal Register 3578, January 30, 1991.
[2]AWQC for the protection of aquatic life - lowest available number is presented (USEPA, May 1986).
[3]AWQC for the protection of human health - from effects through ingestion and contaminated aquatic organisms (USEPA, May 1986).
[4]Effective July 30, 1992.
[5]MCL for total trihalomethanes (sum of concentrations of bromodichloromethane, dibromochloromethane, tribromomethane (bromoform), and trichloromethane) = 100 ug/ℓ.
[6]Secondary MCLs from 40 CFR 143, revised by 56 Federal Register 3595, January 30, 1991. Secondary MCLs are not federally enforceable, they are guidelines to control aesthetic qualities of drinking water.
[7]Units for asbestos MCLs are Million fibers/liter for fibers longer than 10 um.
[a]Acute lowest observed effect concentration (LOEL).
[b]Chronic LOEL.
[c]Hardness based criteria (based on 100 mg/ℓ as CaCO3).
[d]Acute criteria.
[e]Chronic criteria.
[f]Organoleptic, criteria based on odor and taste, not health. No health-based criteria available.
[g]Aldrin plus dieldrin sum.

Notes: MCL = maximum contaminant level.
µg/ℓ = microgram per liter.
MCLG = maximum contaminant level goal.
AWQC = ambient water quality criteria.
IND = insufficient data.
PCB = polychloride biphenyls.

APPENDIX H

Appendix H

Summary Data Needs Per Remedial Technology

Groundwater Remedial Technologies	Data Needs
Containment	
Slurry Walls	• Accessibility of site materials(soils) • Topography • Depth to impermeable strata • Heterogeneity of subsurface formation • Soil conditions • Groundwater depth, flow rate, and direction of flow • Soil chemistry • Chemistry of groundwater
Cap	• Area of contamination • Depth to groundwater table • Availability of cover materials • Soil characteristics; gradation, Atterberg limits, percent moisture, compaction, permeability and strength • Climate (precipitation) • Land use
Extraction Technologies	
Pumping	• Depth to aquifer • Depth to impermeable strata • Aquifer transmissivity • Aquifer storativity • Hydraulic conductivity • Water solubility of contaminants • Soil type • Soil grain size distribution
Drains	• Depth to aquifer • Depth to impermeable strata • Aquifer transmissivity • Aquifer storativity • Hydraulic conductivity • Water solubility of contaminants • Soil type • Soil grain size distribution

Groundwater Remedial Technologies	Data Needs
In-Situ Treatment Technologies	
In-Situ Bioremediation	• Gross organic components (BOD, COD) • Ammonia • pH • VOCs, SVOCs, Metals concentration
Treatment Technologies	
Air Stripping	• Presence of: VOCs Trihalomethanes Ammonia (Nitrogen) SVOCs Metals Oil & Grease Total Suspended Solids Alkalinity pH Temperature COD BOD
	• Presence of large volumes of contaminated water • Discharge locations • Accessible area for set-up • Proximity to utilities
Carbon Adsorption	• Presence of: VOCs Total Petroleum Hydrocarbons BOD COD TSS Ammonia Metals
	• Effluent discharge locations • Access to area for trucks, equipment and removal of spent carbon

Groundwater Remedial Technologies	Data Needs
Treatment Technologies	
Precipitation/Flocculation	• Concentrations of metals in aqueous stream • Presence of compounds that could inhibit the P/F process • Expected variability of the contaminated stream • Area to set up stationary or mobile plant • Distance/accessibility to Base Sewers • Suitable area for discharge of treated water • Contaminants of concern: COD TSS Alkalinity Hardness as CaC03 Metals pH
Ultraviolet Radiation/Ozonation	• Aquifer characteristics that may affect pumping rates • Distribution of contaminants • Distance/accessibility of Base sewers • Availability of discharge locations • Accessible on-site buildings to house $U/0_3$ unit, or the space to construct buildings of adequate size • Contaminant concentration organics, petroleum hydrocarbons, suspended solids, pH of water, metals
Biological Treatment	• Gross organic components (BOD, COD) • Influent pH • VOCs, SVOCs, Metals Concentrations • Flowrate

Groundwater Remedial Technologies	Data Needs
Treatment Technologies	
Resin Adsorption	• Concentrations of metals in aqueous stream • Presence of compounds that couldinhibit the Resin Adsorption Process • Expected variability of the contaminated stream • Area to set up stationary or mobile plant • Distance/accessibility to nearest Base Sewers • Suitable area for discharge of treated water • Contaminants of Concern: COD TSS Alkalinity Hardness as CaC03 pH Metals
Disposal	
Reinjection	• Depth to aquifer • Depth to bedrock or impermeable strata • Aquifer transmissivity • Aquifer storativity • Hydraulic conductivity • Water solubility of contaminants • Soil type • Soil grain size distribution
Sewage Treatment Plant (on-site)	• Gross Organic Components (BOD, COD) • Specific Organic constituents • Influent pH • Effluent requirements • Metals
Discharge to Surface Water	• Surface Water Classification • State and Federal Standards • Discharge Contaminant Concentrations

DRAFT

Soil and Sediment Remedial Technologies	Data Needs
Containment	
Cap	• Extent of contamination • Depth to groundwater table • Availability of cover materials • Soil types and characteristics • Climate (precipitation) • Land use
Excavation	
Excavation of Soils	• Waste characteristics • Nature and area of contamination • Topography • Geologic characteristics • Climate
In-Situ Treatment Technologies	
Biological Treatment	• Area of contamination • Gross organic components (BOD, COD) • VOCs, SVOCs • Microbiology cell enumerations • Dissolved oxygen • pH • Ammonia as N
Vacuum Extraction	• Area of contamination • Concentration profile for contaminants • Soil types and characteristics • Soil permeability • Depth to groundwater • Vapor pressures for contaminants • Results of soil gas surveys
In-Situ Treatment Technologies	
In-Situ Vitrification	• Depth to groundwater • Presence of high levels of organic and inorganic compounds • Location of contamination in top 20 feet • Volume of contaminated soils • Silica content of soils • Presence of underground tanks, pipe lines, buried drums, or other metal debris • Availability of electrical power of sufficient capacity (3000-4000kw)

Soil and Sediment Remedial Technologies	Data Needs
Treatment Technologies	
Thermal Aeration	• Type of soils (fines content, presence of cobbles, presence of high levels of organics) • Contaminant vapor pressure and boiling points • Extent of contamination, depth of contamination • Metals levels • Open area of 200' by 200' for process equipment • Proximity of neighbors (to determine needs for air monitoring and operating hours)
Land Farming (Bioreclamation)	• Specific organic constituents and concentrations • Soil types and characteristics • Available land area (size) • Access • Depth to groundwater • Site topography
Solvent Extraction	• Electrical power availability • Grain size distribution • Total organics present in soil (for volume extract) • Presence of large gravel/rocks/debris • Access to site (for risk assessment of treated soil) • Distance to neighbors (for evaluation of volatile solvent air impacts) • Open area to set up treatment system • Moisture content of soils
Incineration (Rotary Kiln)	• Presence of drummed organic liquids • Presence of soil areas which are highly contaminated with organics • Types of contaminants • Metals levels • Open area to set up mobile incinerator • Proximity of neighbors (for air modeling purposes) • Presence of large unincinerable material (rock, metal, debris, etc.)

SOIL AND SEDIMENT REMEDIAL TECHNOLOGIES	Data Needs
Disposal	
On-Site Landfill	• Waste characteristics • Property survey • Local geology • Waste volume • SVOCs, VOCs, metals concentration
Off-Site Landfill	• Waste characteristics • Property survey • Local geology • Waste volume