N62604.AR.001578
NCBC GULFPORT
5090.3a

TECHNICAL MEMORANDUM NUMBER 1 AT SITE 8A GROUNDWATER SAMPLING TO DETERMINE EXTENT OF CONTAMINATION FROM ASH STORAGE IN GROUNDWATER

NCBC GULFPORT MS

12/1/1994

ABB ENVIRONMENTAL

TECHNICAL MEMORANDUM NO. 1
SITE A, FORMER HERBICIDE ORANGE STORAGE AREA
GROUNDWATER SAMPLING EVENT NO. 1

NAVAL CONSTRUCTION BATTALION CENTER
GULFPORT, MISSISSIPPI

Unit Identification No. N62604

Contract Task Order No. 096

Contract No. N62467-89-D-0317

Prepared by:

ABB Environmental Services, Inc.
2590 Executive Center Circle, East
Berkeley Building
Tallahassee, Florida 32301

Prepared for:

Department of the Navy, Southern Division
Naval Facilities Engineering Command
2155 Eagle Drive
North Charleston, South Carolina 29418

Baker Mordecai, Code 1816, Remedial Project Manager

December 1994

FOREWORD

To meet its mission objectives, the U.S. Navy performs a variety of operations, some requiring the use, handling, storage, or disposal of hazardous materials. Through accidental spills and leaks and conventional methods of past disposal, hazardous materials may have entered the environment in ways unacceptable by today's standards. With growing knowledge of the long-term effects of hazardous materials on the environment, the Department of Defense initiated various programs to investigate and remediate conditions related to suspected past releases of hazardous materials at their facilities.

One of these programs is the Installation Restoration (IR) program. This program complies with the Comprehensive Environmental Response, Compensation, and Liability Act (CERCLA), as amended by the Superfund Amendments and Reauthorization Act (SARA). The acts, passed by Congress in 1980 and 1986, respectively, established the means to assess and cleanup hazardous waste sites for both private-sector and Federal facilities. These acts are the basis for what is commonly known as the Superfund program.

A second program to address present hazardous waste management is the Resource Conservation and Recovery Act (RCRA) corrective action program. This program is designed to identify and cleanup releases of hazardous wastes at RCRA-permitted facilities. RCRA is the law that ensures that solid and hazardous wastes are managed in an environmentally sound manner. The law applies primarily to facilities that generate or handle hazardous waste.

This technical memorandum discusses the findings and results of the monitoring well installation and first round of groundwater sampling at Site A, Former Herbicide Orange Storage Area, Naval Construction Battalion Center, Gulfport, Mississippi. Investigations at the site discussed in the report focus on characterizing groundwater quality and are in support of a petition to delist the site under the RCRA program.

Southern Division, Naval Facilities Engineering Command (SOUTHNAVFACENGCOM), has the responsibility for implementation of the Navy and Marine Corps RCRA program in the southeastern and midwestern United States. Questions regarding this report should be addressed to the SOUTHNAVFACENGCOM Remedial Project Manager, Mr. Baker Mordecai at (803) 743-0690.

EXECUTIVE SUMMARY

ABB Environmental Services, Inc. (ABB-ES), under contract to Southern Division, Naval Facilities Engineering Command (SOUTHNAVFACENGCOM), has prepared this technical memorandum for the ash on Site A, Former Herbicide Orange Storage Area, located at Naval Construction Battalion Center (NCBC), Gulfport, Mississippi. This memorandum was prepared under the Comprehensive Long-Term Environmental Action, Navy (CLEAN) Contract No. N62467-89-D-0317 as Contract Task Order No. 092.

This memorandum reports on the field and sampling events for the ongoing delisting process for Site A, the Former Herbicide Orange Storage Area. Site A occupies approximately 12 acres of flat land in the northeastern part of the base and was used to store Herbicide Orange from 1965 until 1977.

Before the ash on Site A can be considered for delisting, it must be determined whether or not Site A is a source of groundwater contamination. Eight well points were installed during the February 1994 field effort to determine the direction of groundwater flow across Site A. Groundwater flow was determined to be westward across the site. Four monitoring wells, one upgradient and three downgradient, were installed as part of a quarterly groundwater sampling plan.

Sampling activities included collecting two subsurface soil samples and four groundwater samples. The subsurface soil samples were analyzed for moisture content, total organic carbon, total petroleum hydrocarbons (TPH), and grain size. The soil was characterized as a fine- to medium-grained sand with little silt, moderate levels of total organic carbon, and low levels of TPH.

Groundwater samples were analyzed and validated for full Appendix IX list contaminants (U.S. Environmental Protection Agency [USEPA], 1986) and sulfide, polynuclear aromatic hydrocarbons (PAH) (USEPA Method 8310), and dioxin and furans (USEPA Method 1613). Analytical results indicated little organic contamination. Octachlorodibenzodioxin was detected in all four groundwater samples but the concentration for the upgradient well was comparable to those for the downgradient wells. Several inorganics were detected in samples from the wells. The only inorganic compound detected in samples from the downgradient wells and not in the upgradient well was cyanide.

Based on initial monitoring data, Site A does not appear to be a major source of groundwater contamination. The next sampling event will be conducted in August 1994.

TABLE OF CONTENTS

Technical Memorandum No. 1
Site A, Former Herbicide Orange Storage Area
Groundwater Sampling Event No. 1
Naval Construction Battalion Center
Gulfport, Mississippi

Chapter	Title	Page No.
1.0	INTRODUCTION	1-1
	1.1 PURPOSE OF TECHNICAL MEMORANDUM	1-1
	1.2 FACILITY INFORMATION	1-1
	1.3 SITE INFORMATION	1-1
	1.3.1 Site Location and Description	1-1
	1.3.2 Site History	1-1
2.0	FIELD PROGRAM	2-1
	2.1 WELL POINT INSTALLATION	2-1
	2.2 MONITORING WELL INSTALLATION	2-5
	2.3 SUBSURFACE SOIL SAMPLING	2-9
	2.4 GROUNDWATER SAMPLING	2-9
3.0	ANALYTICAL PROGRAM	3-1
	3.1 CHEMICAL ANALYSES	3-1
	3.2 DATA QUALITY ASSESSMENT	3-1
	3.2.1 Precision	3-1
	3.2.2 Accuracy	3-1
	3.2.3 Representativeness	3-10
	3.2.4 Comparability	3-10
	3.2.5 Completeness	3-10
4.0	INVESTIGATIVE RESULTS	4-1
	4.1 SUBSURFACE SOIL CHARACTERIZATION	4-1
	4.2 GROUNDWATER CHARACTERIZATION	4-1
	4.2.1 Dioxins and Furans Detected in Groundwater	4-1
	4.2.2 Organic Compounds Detected in Groundwater	4-1
	4.2.3 Inorganics Detected in Groundwater	4-1
	4.3 CONCLUSIONS	4-5
5.0	SUMMARY	5-1

REFERENCES

APPENDICES:

APPENDIX A: SOIL BORING LOGS AND MONITORING WELL CONSTRUCTION LOGS
APPENDIX B: SOILS ANALYTICAL RESULTS
APPENDIX C: PRECISION, ACCURACY, REPRESENTATIVENESS, COMPARABILITY, AND COMPLETENESS REPORT
APPENDIX D: VALIDATED ANALYTICAL RESULTS

LIST OF FIGURES

Technical Memorandum No. 1
Site A, Former Herbicide Orange Storage Area
Groundwater Sampling Event No. 1
Naval Construction Battalion Center
Gulfport, Mississippi

Figures	Title	Page No.
1-1	Facility Location	1-2
1-2	Topographic Map of Site Vicinity	1-3
1-3	Location of Former Herbicide Orange Storage Areas	1-4
1-4	Site Map	1-5
2-1	Well Point Locations	2-2
2-2	Potentiometric Surface Map, February 17, 1994, Afternoon	2-4
2-3	Monitoring Well Locations	2-6
2-4	Potentiometric Surface Map, May 19, 1994	2-8
4-1	Groundwater Quality Map	4-4

LIST OF TABLES

Tables	Title	Page No.
2-1	Well Point Survey	2-1
2-2	Well Point Water Level Data	2-3
2-3	Monitoring Well Specifications	2-5
2-4	Monitoring Well Survey	2-7
2-5	Monitoring Well Water Level Data	2-7
3-1	Appendix IX Compound List and Practical Quantitation Limits for Corresponding SW-846 Methods	3-2
4-1	Analytical Results of Subsurface Soil Samples	4-2
4-2	Grain Size Results of Subsurface Soil Samples	4-2
4-3	Dioxins and Furans Detected in Groundwater	4-3
4-4	Organic Compounds Detected in Groundwater	4-3
4-5	Inorganics Detected in Groundwater	4-5
4-6	Maximum Chemical Concentrations in Groundwater	4-6

GLOSSARY

1,2,3,4,6,7,8-HpCDD	1,2,3,4,6,7,8-heptachlorodibenzo-p-dioxin
1,2,3,4,7,8-HxCDF	1,2,3,4,7,8-hexachlorodibenzofuran
2,4,5-T	2,4,5-trichlorophenoxyacetic acid
2,3,7,8-TCDD	2,3,7,8-tetrachlorodibenzo-p-dioxin
ABB-ES	ABB Environmental Services, Inc.
bls	below land surface
btoc	below top of casing
CERCLA	Comprehensive Environmental Response, Compensation, and Liability Act
CLEAN	Comprehensive Long-term Environmental Action, Navy
DQO	data quality objective
HAZWRAP	Hazardous Waste Remedial Actions Program
HO	Herbicide Orange
IAS	Initial Assessment Study
ID	inside diameter
IR	Installation Restoration
J	estimated value
$\mu g/\ell$	micrograms per liter
MCL	maximum contaminant level
mg/kg	milligrams per kilogram
mg/ℓ	milligrams per liter
MPC	maximum possible concentration
MS/MSD	matrix spike and matrix spike duplicate
MSDEQ	Mississippi State Department of Environmental Quality
msl	mean sea level
NA	not applicable
NAD	North American Datum
NCBC	Naval Construction Battalion Center
NCF	Naval Construction Force
ND	not detected
NEESA	Naval Energy and Environmental Support Activity
NGVD	National Geodetic Vertical Datum
OCDD	octachlorodibenzodioxin
PAH	polynuclear aromatic hydrocarbons
PARCC	precision, accuracy, representativeness, comparability, and completeness
PCB	polychlorinated biphenyl
PCDD	polychlorinated dibenzodioxin

GLOSSARY (Continued)

PCDF	polychlorinated dibenzofuran
pg/ℓ	picograms per liter
PQL	practical quantitation limit
ppb	part per billion
ppt	part per trillion
RCRA	Resource Conservation and Recovery Act
RD&D	Research, Development, and Demonstration
SARA	Superfund Amendments and Reauthorization Act
SOUTHNAVFACENGCOM	Southern Division, Naval Facilities Engineering Command
SVOC	semivolatile organic compound
TCDD	tetrachlorodibenzodioxin
TEF	Toxicity Equivalency Factor
TOC	top of casing
TPH	total petroleum hydrocarbon
USAF	United States Air Force
USEPA	U.S. Environmental Protection Agency
VOC	volatile organic compound

1.0 INTRODUCTION

1.1 PURPOSE OF TECHNICAL MEMORANDUM. ABB Environmental Services, Inc. (ABB-ES), under contract to Southern Division, Naval Facilities Engineering Command (SOUTHNAVFACENGCOM), has prepared this Technical Memorandum for the Site A, Former Herbicide Orange (HO) Storage Area, at the Naval Construction Battalion Center (NCBC) in Gulfport, Mississippi. SOUTHNAVFACENGCOM requested the development of this Technical Memorandum to report the results of the field investigations and the first groundwater sampling round and to supplement the on-going Resource Conservation and Recovery Act (RCRA) delisting process for the ash at Site A.

1.2 FACILITY INFORMATION. NCBC is located in the western part of Gulfport, Mississippi, in the southeastern part of the State in Harrison County, approximately 2 miles north of the Gulf of Mexico (Figure 1-1). NCBC occupies approximately 1,100 acres and has an elevation averaging approximately 30 feet above sea level (Figure 1-2). Surface soil is primarily sand to sandy loam with minor clay. The primary purpose of NCBC Gulfport is the support of four battalions of the Naval Construction Force (NCF) and the storage and maintenance of prepositioned War Reserve Material Stock.

1.3 SITE INFORMATION.

1.3.1 Site Location and Description Site A is located in the northeastern part of NCBC Gulfport between Goodier and Greenwood Avenue, approximately 3/4 mile west of the East Gate Entrance (Figure 1-3). Site A covers approximately 12 acres of nearly flat land and is comprised of designated Areas A, B, and C. Approximately 850,000 gallons of HO were stored at Site A from 1965 to 1977. Contaminated soil was removed from Areas A, B, and C and incinerated during a successful verification burn in 1986 and continuing through 1988. The resulting ash was placed in piles at Area A. Ash piles currently cover approximately 60 percent of Area A. Area A is surrounded by an 8-foot high chain-linked fence (Figure 1-4). No liners, covers, or protective barriers have been placed on top of the ground or ash. Area A is the primary focus of this report.

Field observations indicate that the surface of the ash is not stable and may become mobile under the influence of wind and/or rainfall. The water table at Site A ranges from 3 to 10 feet below land surface (bls) (Dames and Moore, 1990). Surface water at the site flows north via several drainage ditches. Some surface drainage is diverted to three onsite basins. The basins are elongated east to west approximately 50 feet long and 10 feet wide and are lined with gravel. The basins are centrally located at Site A. Much of the surface at the site that is not under ash piles is covered with gravel fill material or stabilized with concrete. The remainder of the surface consists of a sandy-grained soil. Vegetation is sparse at the site and is limited to blackberry brambles, low shrubs, and fir trees (generally less than 5 feet tall).

1.3.2 Site History In 1980, the Air Force Surgeon General issued a protocol to return HO-contaminated sites to full use. During 1984, the former storage areas were initially characterized for contamination of 2,3,7,8-tetrachlorodibenzeno-p-dioxin (2,3,7,8-TCDD), which is an impurity found in HO. In 1986,

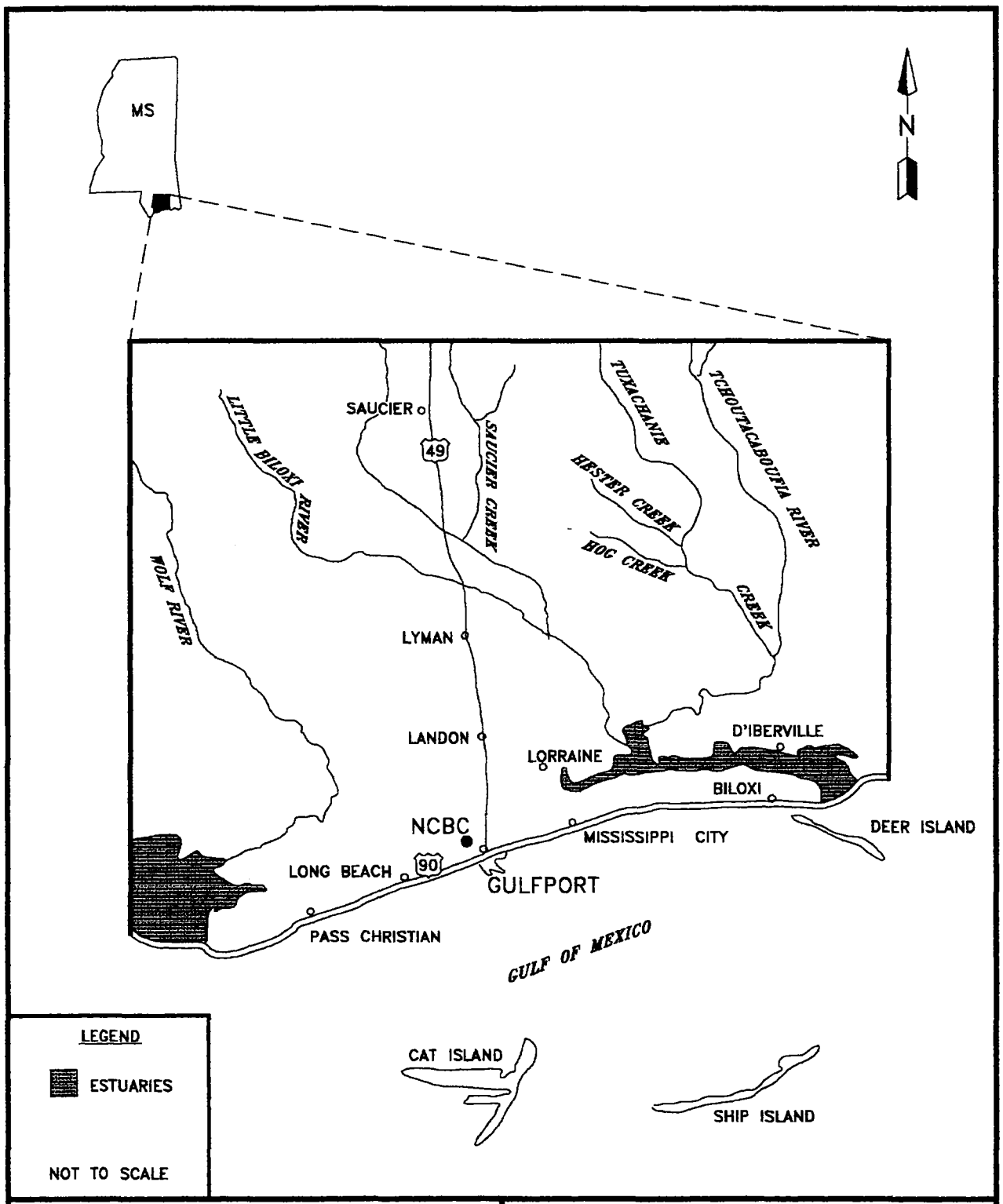

FIGURE 1-1

FACILITY LOCATION

TECHNICAL MEMORANDUM NO. 1
FORMER HERBICIDE ORANGE
SITE A

NCBC GULFPORT
GULFPORT, MISSISSIPPI

C:\GULFPORT\HOTM\NCBC\8504.50\FIG1-1\JSL\940714

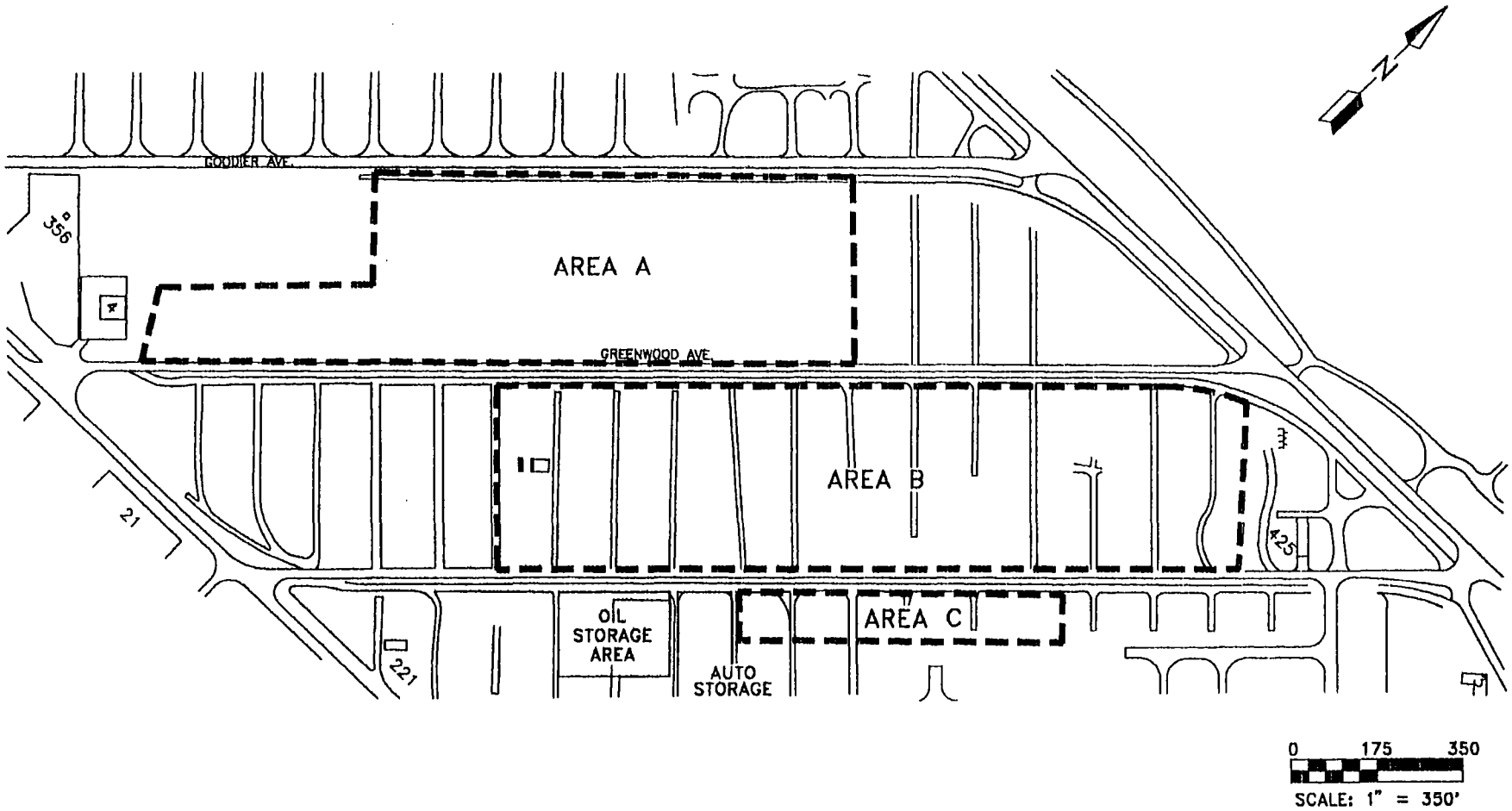

FIGURE 1-4

SITE MAP

TECHNICAL MEMORANDUM NO. 1
FORMER HERBICIDE ORANGE
SITE A

NCBC GULFPORT
GULFPORT, MISSISSIPPI

C:\GULFPORT\HOTM\TM1\NCBC\8504.50\FIG1-4\JSL\941209

MS_SiteA.TM1
MVL(mlv);11.94

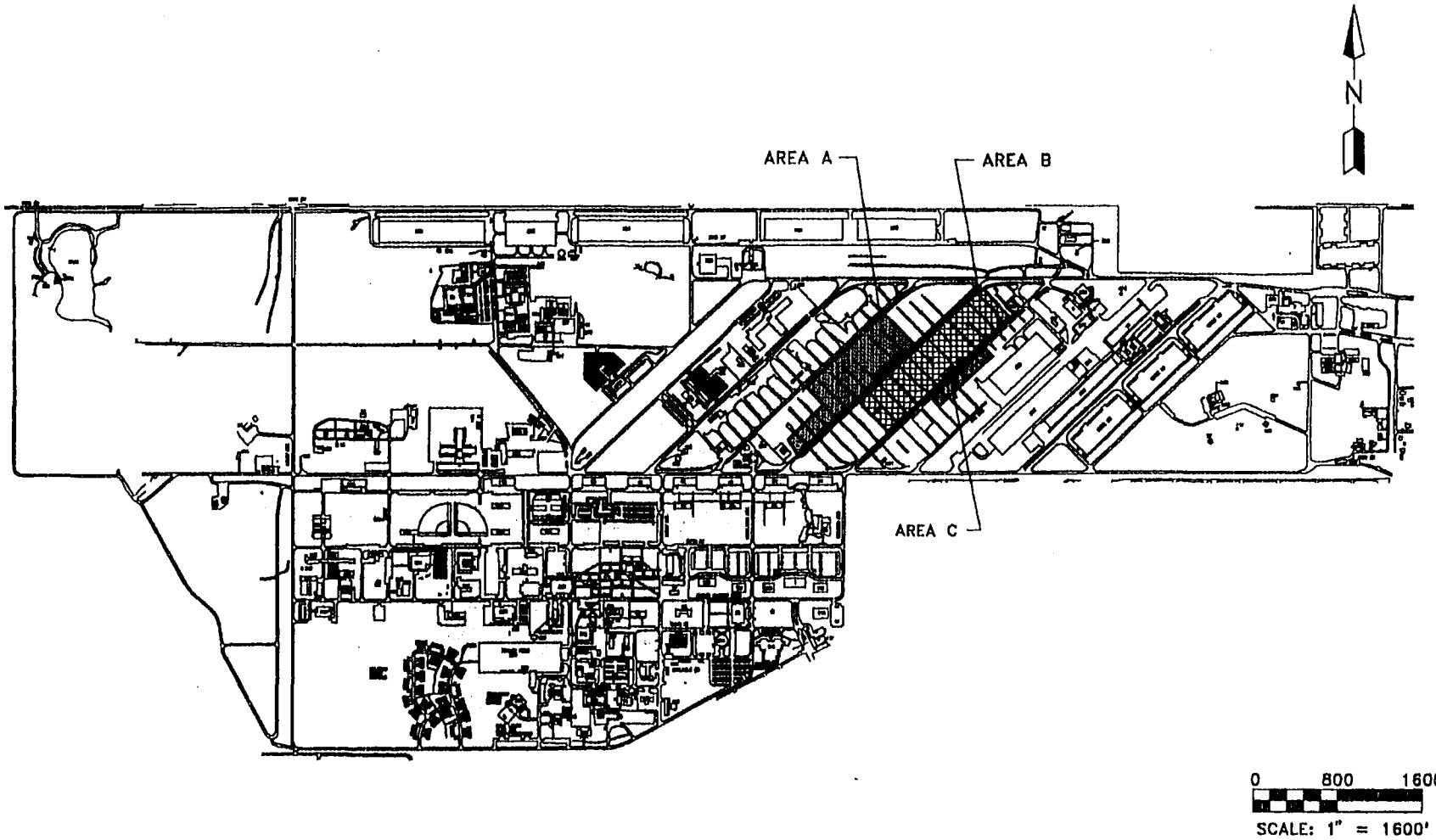

FIGURE 1-3

LOCATION OF FORMER HERBICIDE ORANGE STORAGE AREAS

TECHNICAL MEMORANDUM NO. 1
FORMER HERBICIDE ORANGE SITE A

NCBC GULFPORT
GULFPORT, MISSISSIPPI

C:\GULFPORT\HOTM\TM1\NCBC\8505.50\FIG1-3\JSL\941209

MS_SiteA.1M1
MVL(mlv).11.94

additional contamination within the storage areas was discovered and characterized. This characterization entailed subdividing all areas where HO was known to have been stored on the Base into 20-foot by 20-foot grids and collecting composite samples from each grid. These investigations indicated that an area of approximately 2 to 4 acres was contaminated with HO. Nearly all soil samples collected had 2,3,7,8-TCDD levels in excess of 1 part per billion (ppb) (Hazardous Waste Remedial Actions Program [HAZWRAP], 1991).

The U.S. Air Force (USAF) obtained a RCRA Research, Development, and Demonstration (RD&D) permit from the U.S. Environmental Protection Agency (USEPA) Region IV in July 1986 to operate an incinerator at the base to incinerate the 2,3,7,8-TCDD-contaminated soil. Following a successful verification burn in 1986, full-scale incineration of approximately 30,000 cubic yards of soil contaminated with 2,3,7,8-TCDD was performed through 1988. Analytical tests performed on the resulting ash showed that the 2,3,7,8-TCDD concentrations were below 0.499 part per trillion (ppt). Based on the ash test results, the USAF determined that the treated soil could be returned to selected areas within Site A (Versar, 1990).

The contaminated soil was originally classified as F027 RCRA listed waste. Classification of the incinerated soil is F028, residues resulting from incineration of F027 contaminated soil. The test results from the ash were submitted in a petition for final exclusion of the incinerator residues on November 9, 1988. This petition was considered incomplete and was, therefore, withdrawn. Groundwater information needed to be provided in the petition that characterizes the impact of F028 waste on the quality of the groundwater. It must be determined that the F028 waste does not pose a potential to migrate into the groundwater (Federal Register, 1989).

Versar developed a groundwater monitoring plan for Site A in 1990. However, a groundwater monitoring plan was not implemented until 1994 when ABB-ES installed four monitoring wells in April and collected the first round of quarterly groundwater samples in May. This technical memorandum presents the findings from the monitoring well installation and first groundwater sampling event.

To return the site to active use, the ash on the site must be approved for delisting by the USEPA. The objective of the quarterly groundwater sampling is to determine whether the groundwater is contaminated with dioxin or other inorganic contaminants at levels higher than background. Results from four groundwater sampling events and from the ash sampling will be incorporated into an addendum report for submittal to USEPA headquarters and the Mississippi State Department of Environmental Quality (MSDEQ) to support delisting the ash at Site A.

2.0 FIELD PROGRAM

The field program consisted of installing well points and monitoring wells and of sampling groundwater and subsurface soil. The field program began in February 1994, and the first round of groundwater sampling concluded in May 1994. Additional rounds of groundwater sampling will be conducted quarterly for 1 year.

2.1 WELL POINT INSTALLATION. Eight well points were installed during field activities on February 16, 1994, to assess groundwater flow direction across Site A. Well point locations are shown on Figure 2-1. The horizontal and vertical coordinates of each well point were surveyed by a Mississippi-licensed surveyor and are presented in Table 2-1.

Table 2-1
Well Point Survey

Technical Memorandum No. 1
Site A, Former Herbicide Orange Storage Area
Groundwater Sampling Event No. 1
Naval Construction Battalion Center
Gulfport, Mississippi

Well No.	Horizontal Coordinates[1] North	Horizontal Coordinates[1] East	TOC Elevation (msl)
HO-1	260192.05	410706.45	34.82
HO-2	259685.43	410254.48	33.68
HO-3	258968.67	410436.75	34.13
HO-4	258879.95	409776.39	34.57
HO-5	258533.07	409168.46	33.71
HO-6	258997.27	409409.93	33.18
HO-7	259271.84	409440.20	33.48
HO-8	259736.75	409908.82	33.30

[1] U.S. Geological Survey, North American Datum, 1927.

Notes: TOC = top of casing.
msl = mean sea level.

The elevation of groundwater was determined by subtracting the depth of water below the top of casing (btoc) from the elevation at the top of casing. Several rounds of water level measurements were taken using a water level indicator and are reported in Table 2-2. Figure 2-2 is a potentiometric surface map created using results from a round of water level measurements taken during the afternoon of February 17, 1994. This potentiometric map indicates groundwater flowing to the west across Site A. The potentiometric surface map was used to locate the permanent monitoring wells, such that there are one upgradient and three downgradient monitoring wells.

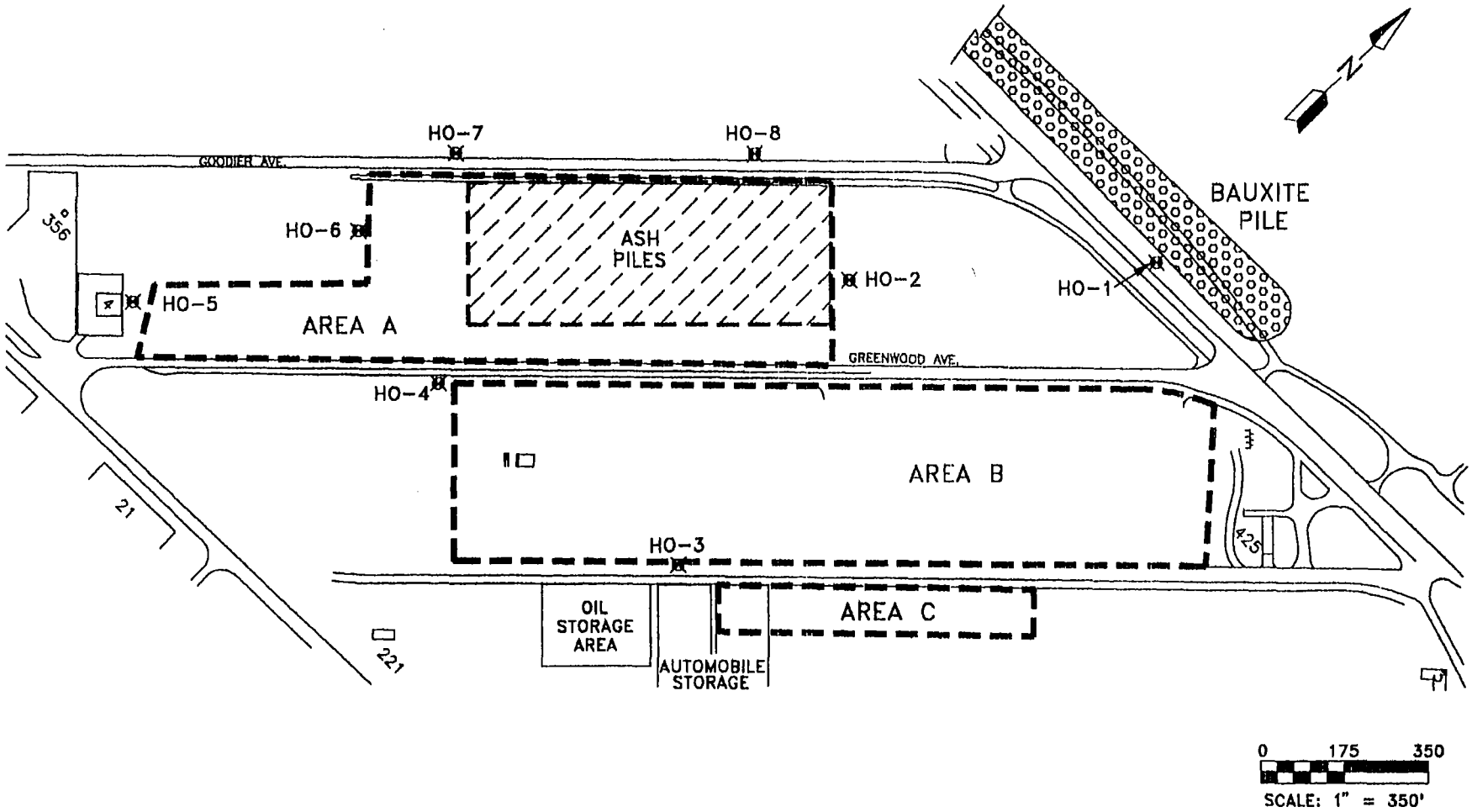

LEGEND

HO-4 ⊠ WELLPOINT LOCATION

FIGURE 2-1

WELL POINT LOCATIONS

TECHNICAL MEMORANDUM NO. 1
FORMER HERBICIDE ORANGE
SITE A

NCBC GULFPORT
GULFPORT, MISSISSIPPI

C:\GULFPORT\HOTM\TM1\NCBC\8504.50\FIG2-1\JSL\941209

2.2 MONITORING WELL INSTALLATION. Four monitoring wells were installed during the April 1994 field effort. The screened interval of all four monitoring wells intersect the water table. The monitoring well locations were determined from the groundwater flow direction across the site (Figure 2-3). One monitoring well (GPT-A-1) was placed upgradient of Site A to establish the upgradient water quality for the site in the surficial aquifer. This well was positioned to be upgradient to Site A without being downgradient to Site B. Three monitoring wells (GPT-A-2, GPT-A-3, and GPT-A-4) were placed downgradient of Site A to establish the downgradient water quality in the surficial aquifer at the site.

The monitoring wells were installed following the protocol outlined in the monitoring well installation plan (ABB-ES, 1993a). The monitoring wells were constructed of 2-inch-inside diameter (ID), stainless-steel casing and 2-inch-ID, wire-wrapped screen 10-foot in length. Well construction information is provided in Table 2-3. Soil boring logs and well construction diagrams are provided in Appendix A.

Table 2-3
Monitoring Well Specifications

Technical Memorandum No. 1
Site A, Former Herbicide Orange Storage Area
Groundwater Sampling Event No. 1
Naval Construction Battalion Center
Gulfport, Mississippi

Well No.	Casing Diameter (inch)	Total Depth (feet bls)	Screen Interval (feet bls)	Screen Slot Size (inch)	Filter Pack Sand Type[1]
GPT-A-1	2	15.0	3.5 to 13.5	0.020	20/30
GPT-A-2	2	14.0	3.0 to 13.0	0.020	20/30
GPT-A-3	2	14.0	2.5 to 12.5	0.020	20/30
GPT-A-4	2	13.0	2.5 to 12.5	0.020	20/30

[1] The first number represents sieve size D_{90} and the second number represents sieve size D_{10}.

Note: bls = below land surface.

Continuous split-spoon samples were taken from the upgradient monitoring well for lithologic descriptions and to allow head space monitoring for volatile organics. Soil samples from two intervals (7 feet to 9 feet bls and 12 feet to 14 feet bls) were collected and sent to an offsite laboratory for grain-size, total petroleum hydrocarbon (TPH), and total organic carbon analyses.

Monitoring wells were installed so that the screened intervals intersect the water table. Enough screen was added above and below the water level to allow for seasonal fluctuations of the water table. Shallow monitoring wells were used because any possible dioxin contamination in the groundwater would remain shallow because dioxin is relatively insoluble in water and has a high affinity for organic material. The horizontal and vertical coordinates of each monitoring well were surveyed by a Mississippi-licensed surveyor and are presented in Table 2-4.

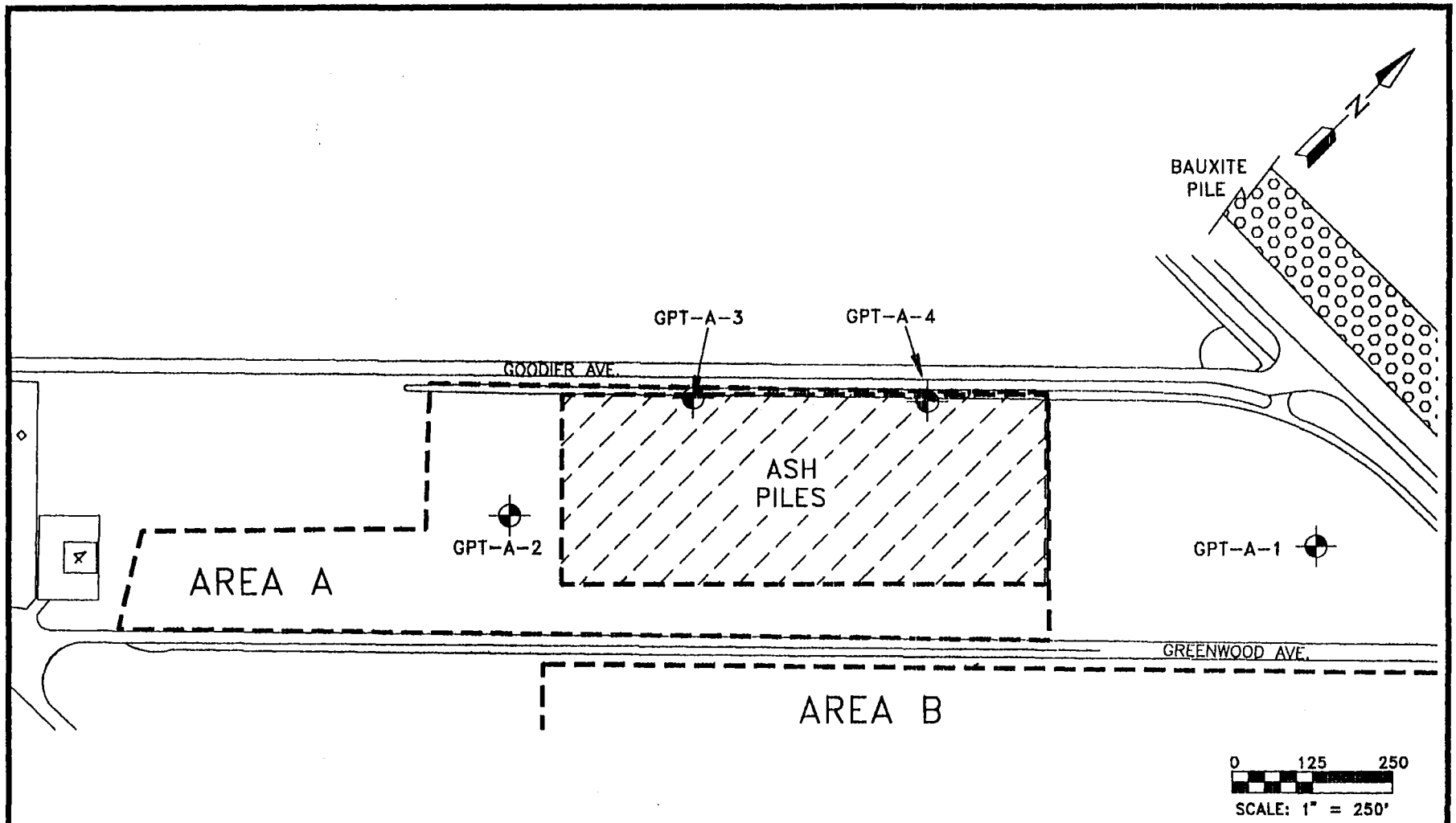

LEGEND

MONITORING WELL LOCATION

FIGURE 2-3

MONITORING WELL LOCATIONS

TECHNICAL MEMORANDUM NO. 1
FORMER HERBICIDE ORANGE
SITE A

NCBC GULFPORT
GULFPORT, MISSISSIPPI

C:\GULFPORT\HOTM\TM1\NCBC\8504.50\FIG2-3\JSL\941209

MS_SiteA.TM1
MVL(mlv),11.94

DISTRIBUTION

	Final Draft
Southern Division, Naval Facilities Engineering Command	3
U.S. Air Force	1
Naval Construction Battalion Center, Gulfport, Mississippi	6

Table 2-4
Monitoring Well Survey

Technical Memorandum No. 1
Site A, Former Herbicide Orange Storage Area
Groundwater Sampling Event No. 1
Naval Construction Battalion Center
Gulfport, Mississippi

Well No.	Horizontal Coordinates[1] North	Horizontal Coordinates[1] East	TOC Elevation (msl)
GPT-A-1	259946.44	410564.84	32.20
GPT-A-2	259040.74	409587.93	31.59
GPT-A-3	259393.81	409662.64	33.71
GPT-A-4	259662.96	409940.39	33.69

[1] U.S. Geological Survey, North American Datum, 1927.

Notes: TOC = top of casing.
msl = mean sea level.

Following monitoring well installation, each well was developed by removing at least 100 gallons of water. Development sheets for all of the monitoring wells are provided in Appendix A. Decontamination procedures are outlined in the monitoring well installation Plan (ABB-ES, 1993a). All decontamination fluids, development fluids, and soil drilling cuttings were properly containerized in 55-gallon U.S. Department of Transportation-approved drums and labeled for special handling and disposal.

All monitoring well installation activities were performed following Level B health and safety protocols (ABB-ES, 1994).

Several rounds of water level readings were taken after the well installations. Results from these rounds are provided in Table 2-5. Figure 2-4 is a potentiometric surface map created from a round of water levels taken on May 19, 1994. The potentiometric surface map indicates groundwater flowing to the west.

Table 2-5
Monitoring Well Water Level Data

Technical Memorandum No. 1
Site A, Former Herbicide Orange Storage Area
Groundwater Sampling Event No. 1
Naval Construction Battalion Center
Gulfport, Mississippi

Well Number	Date	Depth to Water (feet btoc)	Well Top Elevation (feet msl)	Water Level Elevation (feet msl)
GPT-A-1	04/20/94	4.43	32.20	27.77
	05/19/94	4.43		27.77
GPT-A-2	04/20/94	4.75	31.59	26.84
	05/19/94	4.83		26.76
GPT-A-3	04/20/94	7.48	33.71	26.23
	05/19/94	7.49		26.22
GPT-A-4	04/20/94	6.83	33.69	26.86
	05/19/94	6.81		26.88

Notes: btoc = below top of casing.
msl = mean sea level.

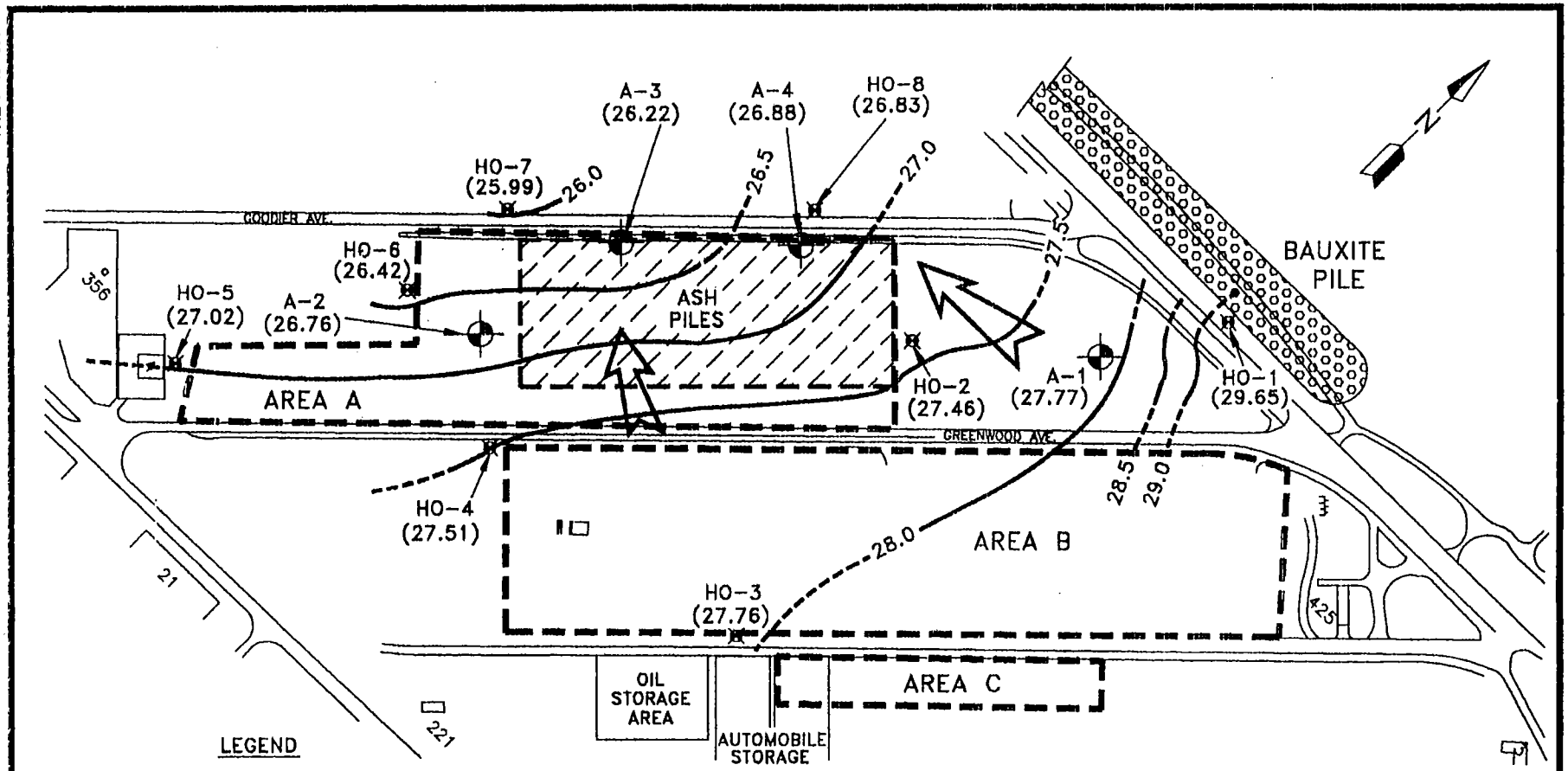

FIGURE 2-4

POTENTIOMETRIC SURFACE MAP, MAY 19, 1994

TECHNICAL MEMORANDUM NO. 1
FORMER HERBICIDE ORANGE SITE A

NCBC GULFPORT
GULFPORT, MISSISSIPPI

C:\GULFPORT\HOTM\NCBC\8504.50\FIG2-4\JSL\941115

MS_SiteA.TM1
MVL(mlv).11.94

2.3 SUBSURFACE SOIL SAMPLING. Subsurface soil was characterized during drilling operations. Continuous split-spoon samples were collected from the upgradient well location. The soil cuttings from the other wells and the split-spoon samples from the upgradient well were screened with an organic vapor analyzer. In addition, two subsurface soil samples were taken from the upgradient well for grain-size, moisture content, total organic carbon, and TPH analyses. The samples were collected at depths of 7 to 9 feet bls and 12 to 14 feet bls. The analytical results from these samples are discussed in Chapter 4.0 and are presented in Appendix B.

2.4 GROUNDWATER SAMPLING. Approximately 30 days following the well installation, the first quarterly sampling event was conducted. Each well was sampled for a full USEPA Appendix IX (1986) analyses, polynuclear aromatic hydrocarbons (PAH) (USEPA Method 8310), and dioxins and furans (USEPA Method 1613). The samples were collected according to Naval Energy and Environmental Support Activity (NEESA) Level D protocol. A distilled water blank, potable water blank, equipment rinsate blank, trip blank, duplicate sample, and matrix spike and matrix spike duplicate (MS/MSD) were collected to fulfill quality assurance requirements.

Sampling procedures followed the requirements and protocol as outlined in the addendum to the Versar sampling and analysis plan (ABB-ES, 1993b). Each well was purged prior to sampling, and all sampling activities were conducted following Level B health and safety requirements.

3.0 ANALYTICAL PROGRAM

This chapter summarizes the analytical program for subsurface soil samples and groundwater samples collected during the field activities in April and May 1994. It also presents a summary of data quality and useability.

3.1 CHEMICAL ANALYSES. Sampling activities included collecting samples of subsurface soil and groundwater. All environmental samples and associated quality control samples (including source water blanks, rinsate blanks, field duplicates, and MS/MSD samples) were collected in accordance with procedures outlined in the addendum to the Versar sampling and analysis plan (ABB-ES, 1993b) and the June 1988 NEESA *Sampling and Chemical Analysis Quality Assurance Requirements for the Navy Installation Restoration Program* (NEESA, 1988).

Subsurface soil samples collected were analyzed for moisture content, total organic carbon, TPH, and grain size according to USEPA-approved methodology and Level V and equivalent NEESA Level E data quality objectives (DQOs).

Groundwater samples collected for USEPA Appendix IX constituents, sulfide, and PAH (USEPA Method 8310) analyses were analyzed according to SW-846 methodology (USEPA, 1986). Analytical data were validated according to USEPA Level IV and equivalent NEESA Level D DQOs. Table 3-1 provides the Appendix IX compounds and their associated practical quantitation limits (PQLs).

Level IV data validation was performed by evaluating conformance to quality control criteria established for each analytical method in the USEPA *National Functional Guidelines for Organic Data Review* (USEPA, 1991) and *Laboratory Data Validation: Functional Guidelines For Evaluating Inorganics Analyses* (USEPA, 1988). Level IV data validation was performed by a subcontractor.

3.2 DATA QUALITY ASSESSMENT. During data validation, data quality indicators of precision, accuracy, representativeness, comparability, and completeness (PARCC), as described in the addendum to the Versar sampling and analysis plan (ABB-ES, 1993b), were evaluated for all groundwater data generated during the investigation to determine data useability. The following subsections summarize the results of the PARCC evaluation for site characterization data.

3.2.1 Precision Precision of the water matrix data was acceptable based on the assessment of duplicate precision criteria except for a few minor exceptions. The octachlorodibenzodioxin (OCDD) for the duplicate sample, GPTHOGW-1D, was reported as a maximum possible concentration (MPC) and should not be considered as a true positive result. The 1,2,3,4,7,8-hexachlorodibenzofuran (1,2,3,4,7,8-HxCDF) and the 1,2,3,4,6,7,8-heptachlorodibenzo-p-dioxin (1,2,3,4,6,7,8-HpCDD) values reported for GPTHOGW-4 are also MPCs and should not be considered as true positive results. Several inorganics exhibited non-compliant relative percent differences; however, the data were not qualified and are considered useable.

3.2.2 Accuracy Accuracy criteria were met for all data with the following exceptions. The MS/MSD exhibited non-compliance for arsenic, selenium, thallium,

Table 3-1
Appendix IX Compound List and Practical Quantitation Limits for Corresponding SW-846 Methods

Technical Memorandum No. 1
Site A, Former Herbicide Orange Storage Area
Groundwater Sampling Event No. 1
Naval Construction Battalion Center
Gulfport, Mississippi

	PQL Water ($\mu g/\ell$)
Appendix IX Volatile Organic Compounds	
Method: USEPA SW-846 Method 8240	
Chloromethane	10
Bromomethane	10
Vinyl chloride	10
Chloroethane	10
Methylene chloride	5
Acetone	10
Carbon disulfide	5
Trichlorofluoromethane	5
1,1-Dichloroethene	5
1,1-Dichloroethane	5
1,2-Dichloroethene (total)	5
Chloroform	5
1,2-Dichloroethane	5
2-Butanone (methyl ethyl ketone)	10
1,1,1-Trichloroethane	5
Carbon tetrachloride	5
Vinyl acetate	10
Bromodichloromethane	5
1,2-Dichloropropane	5
cis-1,3-Dichloropropene	5
Trichloroethene	5
Dibromochloromethane	5
1,1,2-Trichloroethane	5
Benzene	5
trans-1,3-Dichloropropene	5
2-Chloroethylvinylether	10
Bromoform	5
2-Hexanone	10

See notes at end of table.

Table 3-1 (Continued)
Appendix IX Compound List and Practical Quantitation Limits for Corresponding SW-846 Methods

Technical Memorandum No. 1
Site A, Former Herbicide Orange Storage Area
Groundwater Sampling Event No. 1
Naval Construction Battalion Center
Gulfport, Mississippi

	PQL Water (µg/ℓ)
4-Methyl-2-pentanone	10
Tetrachloroethene	5
1,1,2,2-Tetrachloroethane	5
Toluene	5
Chlorobenzene	5
Ethylbenzene	5
Styrene	5
Xylene (total)	5
1,3-Dichlorobenzene	5
1,4-Dichlorobenzene	5
1,2-Dichlorobenzene	5
Acrolein	100
Iodomethane	10
Acrylonitrile	100
Dibromomethane	5
Ethyl methacrylate	5
1,2,3-Trichloropropane	5
trans-1,4-Dichloro-2-butene	5
Acetonitrile	100
3-Chloropropene	5
Propionitrile	100
Methacrylonitrile	5
1,4-Dioxane	200
Methyl methacrylate	10
1,2-Dibromoethane	5
1,1,1,2-Tetrachloroethane	5
1,2-Dibromo-3-chloropropane	10
Pentachloroethane	10
Isobutyl alcohol	200
Chloroprene	200

See notes at end of table.

Table 3-1 (Continued)
Appendix IX Compound List and Practical Quantitation Limits for Corresponding SW-846 Methods

Technical Memorandum No. 1
Site A, Former Herbicide Orange Storage Area
Groundwater Sampling Event No. 1
Naval Construction Battalion Center
Gulfport, Mississippi

	PQL Water ($\mu g/\ell$)
Appendix IX Semivolatile Organic Compounds	
Method: USEPA SW-846 Method 8270	
N-Nitrosodimethylamine	10
Phenol	10
Aniline	10
bis(2-Chloroethyl)ether	10
2-Chlorophenol	10
1,3-Dichlorobenzene	10
1,4-Dichlorobenzene	10
Benzyl alcohol	10
1,2-Dichlorobenzene	10
2-Methylphenol	10
bis(2-Chloroisopropyl)ether	10
N-Nitrosodi-n-propylamine	10
Hexachloroethane	10
Nitrobenzene	10
Isophorone	10
2-Nitrophenol	10
2,4-Dimethylphenol	10
Benzoic acid	50
bis(2-Chloroethoxy)methane	10
2,4-Dichlorophenol	10
1,2,4-Trichlorobenzene	10
Naphthalene	10
4-Chloroaniline	10
Hexachlorobutadiene	10
4-Chloro-3-methylphenol	10
2-Methylnaphthalene	10
Hexachlorocyclopentadiene	10
2,4,6-Trichlorophenol	10
2,4,5-Trichlorophenol	50
2-Chloronaphthalene	10
2-Nitroaniline	50

See notes at end of table.

Table 3-1 (Continued)
Appendix IX Compound List and Practical Quantitation Limits for Corresponding SW-846 Methods

Technical Memorandum No. 1
Site A, Former Herbicide Orange Storage Area
Groundwater Sampling Event No. 1
Naval Construction Battalion Center
Gulfport, Mississippi

	PQL Water (µg/ℓ)
Dimethylphthalate	10
Acenaphthylene	10
2,6-Dinitrotoluene	10
3-Nitroaniline	50
Acenaphthene	10
2,4-Dinitrophenol	50
4-Nitrophenol	50
Dibenzofuran	10
2,4-Dinitrotoluene	10
Diethylphthalate	10
4-Chlorophenyl-phenylether	10
Fluorene	10
4-Nitroaniline	50
4,6-Dinitro-2-methylphenol	50
N-Nitrosodiphenylamine	10
Diphenylamine	10
1,2-Diphenylhydrazine	10
4-Bromophenyl-phenylether	10
Hexachlorobenzene	10
Pentachlorophenol	50
Phenanthrene	10
Anthracene	10
Di-n-butylphthalate	10
Fluoranthene	10
Pyrene	10
Butylbenzylphthalate	10
3,3'-Dichlorobenzidine	20
Benzo(a)anthracene	10
Chrysene	10
bis(2-Ethylhexyl)phthalate	10
Di-n-octyl phthalate	10
Benzo(b)fluoranthene	10
Benzo(k)fluoranthene	10

See notes at end of table.

Table 3-1 (Continued)
Appendix IX Compound List and Practical Quantitation Limits for Corresponding SW-846 Methods

Technical Memorandum No. 1
Site A, Former Herbicide Orange Storage Area
Groundwater Sampling Event No. 1
Naval Construction Battalion Center
Gulfport, Mississippi

	PQL Water (µg/ℓ)
Benzo(a)pyrene	10
Indeno(1,2,3-cd)pyrene	10
Dibenz(a,h)anthracene	10
Benzo(g,h,i)perylene	10
2-Picoline	50
Methyl methanesulfonate	10
Ethyl methanesulfonate	10
Acetophenone	10
N-Nitrosopiperidine	10
Phenyl-tert-butylamine	50
2,6-Dichlorophenol	10
N-Nitrosodi-n-butylamine	10
N-Nitrosodiethylamine	10
N-Nitrosopyrrolidine	10
Benzidine	50
1,2,4,5-Tetrachlorobenzene	50
Pentachlorobenzene	50
1-Naphthylamine	50
2-Naphthylamine	50
2,3,4,6-Tetrachlorophenol	10
Phenacetin	10
4-Aminobiphenyl	50
Pentachloronitrobenzene	50
Pronamide	10
p-Dimethylaminoazobenzene	10
7,12-Dimethylbenz(a)anthracene	10
3-Methylcholanthrene	10
Pyridine	50
N-Nitrosomethylethylamine	10
N-Nitrosomorpholine	10
o-Toluidine	10
3-Methylphenol	20
4-Methylphenol	20

See notes at end of table.

Table 3-1 (Continued)
Appendix IX Compound List and Practical Quantitation Limits for Corresponding SW-846 Methods

Technical Memorandum No. 1
Site A, Former Herbicide Orange Storage Area
Groundwater Sampling Event No. 1
Naval Construction Battalion Center
Gulfport, Mississippi

	PQL Water (μg/ℓ)
Hexachloropropene	50
p-Phenylenediamine	50
Safrole	50
Isosafrole	50
1,4-Naphthoquinone	50
1,3-Dinitrobenzene	10
5-Nitro-o-toluidine	10
1,3,5-Trinitrobenzene	10
4-Nitroquinoline-1-oxide	10
Methapyrilene	50
Aramite	50
3,3'-Dimethylbenzidine	10
2-Acetamidofluorene	10
Hexachlorophene	50
Parameter: Organochlorine Pesticides and PCBs	
Method: USEPA SW-846 Method 8080	
alpha-benzene hexachloride	0.05
beta-benzene hexachloride	0.05
delta-benzene hexachloride	0.05
gamma-benzene hexachloride (Lindane)	0.05
Heptachlor	0.05
Aldrin	0.05
Heptachlor epoxide	0.05
Endosulfan I	0.10
Dieldrin	0.10
4,4'-Dichlorodiphenyldichloroethylene	0.10
Endrin	0.10
Endosulfan II	0.10
4,4'-Dichlorodiphenyldichloroethane	0.10
Endrin aldehyde	0.10
Endosulfan sulfate	0.10
4,4'-Dichlorodiphenyltrichloroethane	0.10

See notes at end of table.

Table 3-1 (Continued)
Appendix IX Compound List and Practical Quantitation Limits for Corresponding SW-846 Methods

Technical Memorandum No. 1
Site A, Former Herbicide Orange Storage Area
Groundwater Sampling Event No. 1
Naval Construction Battalion Center
Gulfport, Mississippi

	PQL Water (µg/ℓ)
Methoxychlor	0.50
Endrin ketone	0.10
Chlordane	0.50
Toxaphene	1.0
Aroclor-1016	0.8
Aroclor-1221	2.0
Aroclor-1232	2.0
Aroclor-1242	0.8
Aroclor-1248	0.5
Aroclor-1254	1.0
Aroclor-1260	1.0
Chlorobenzilate	0.50
Diallate	1.0
Isodrin	0.02
Kepone	1.0
Parameter: Herbicides	
Method: USEPA SW-846 Method 8150	
2,4-Dichlorophenoxyacetic acid	2.5
2,4,5-Trichlorophenoxyacetic acid	0.5
Dinoseb	2.5
Silvex	0.5
Parameter: Organophosphorus Pesticides	
Method: USEPA SW-846 Method 8140	
Triethylphosphorothioate	1.0
Thionazin	1.0
Sulfotepp	1.0
Phorate	1.0
Dimethoate	5.0
Disulfoton	1.0
Methyl parathion	1.0
Ethyl parathion	1.0
Famphur	1.0

See notes at end of table.

Table 3-1 (Continued)
Appendix IX Compound List and Practical Quantitation Limits for Corresponding SW-846 Methods

Technical Memorandum No. 1
Site A, Former Herbicide Orange Storage Area
Groundwater Sampling Event No. 1
Naval Construction Battalion Center
Gulfport, Mississippi

		PQL Water ($\mu g/\ell$)
Parameter: Inorganic Analytes		
Method : Various SW-846 Methods		
Antimony	(Method 6010)	60
Arsenic	(Method 7060)	10
Barium	(Method 6010)	200
Beryllium	(Method 6010)	5
Cadmium	(Method 6010)	5
Chromium	(Method 6010)	10
Cobalt	(Method 6010)	50
Copper	(Method 6010)	25
Lead	(Method 7421)	3
Mercury	(Method 7470)	0.2
Nickel	(Method 6010)	40
Selenium	(Method 7740)	5
Silver	(Method 6010)	10
Thallium	(Method 7841)	10
Vanadium	(Method 6010)	50
Zinc	(Method 6010)	20
Cyanide	(Method 9010)	10
Tin	(Method 6010)	200
Sulfide	(Method 9030)	100

Source: U.S. Environmental Protection Agency, 1986.

Notes: These are typically expected values. Actual practical quantitation limits may vary depending on laboratory historical performances and media.

PQL = practical quantitation limit.
$\mu g/\ell$ = micrograms per liter.
USEPA = U.S. Environmental Protection Agency.
SW-846 = Statement of Work 846, U.S. Environmental Protection Agency, 1986.

and cyanide, which qualified the positive and undetected results as estimated. The MS/MSD exhibited non-compliance for lead also, which caused the undetected results to be rejected and the positive results to be estimated. Internal standard recoveries for several dioxin and furans were unacceptable, and the associated data were qualified as estimated. The accuracy of the groundwater matrix analytical data was acceptable.

3.2.3 Representativeness Representativeness of the analytical data was assessed and corrective action was taken when necessary. The field blank exhibited some laboratory contamination. The dioxin and furan analyses of the rinsate sample were rejected because the initial sample was accidentally spiked at the laboratory and the reanalysis indicated laboratory contamination. The rejection of the rinsate sample did not require sample data to be qualified. The assessment of the method blank for representativeness was acceptable even though some of the analytical results required qualification. Holding times were met with the exception of the semivolatile organic compounds (SVOCs), PAHs, and organophosphorus pesticides. Exceeding the holding times did not require any data to be rejected, only estimated, and the data are considered useable.

3.2.4 Comparability Comparability is the qualitative measure designed to express the confidence with which one data set may be compared to another. The analytical samples were collected and transported to the chemical analytical laboratory in accordance with standard procedures and were analyzed in conformance with acceptable USEPA procedures.

3.2.5 Completeness Overall, the analytical data met the completeness goal of 85 percent for every fraction. The only fraction to fall below the completeness goal was the dioxin and furans for the quality control samples.

4.0 INVESTIGATIVE RESULTS

4.1 SUBSURFACE SOIL CHARACTERIZATION. Subsurface soil was characterized during drilling operations. Continuous split-spoon samples collected during installation of the upgradient well indicated, which was confirmed by laboratory grain-size analyses, a fine- to medium-grained sand with little silt. Several lenses of fine- and medium-grained gravel were observed from split-spoon samples collected between 8 feet and 14 feet bls. These lenses were generally less than 1/10 foot thick. In addition to grain-size analyses, moisture content, total organic carbon, and TPH were analyzed. The samples were properly labeled, packed, and shipped to an offsite laboratory following NEESA Level E protocol (USEPA DQO Level V). Table 4-1 reports the analytical results for moisture content, total organic carbon, and TPH. Table 4-2 presents the grain size results from subsurface samples. Laboratory results are provided in Appendix B.

4.2 GROUNDWATER CHARACTERIZATION. Groundwater samples were collected from the four monitoring wells for analyses and for the associated quality assurance and quality control requirements. The samples were properly labeled, packed, and shipped to an offsite laboratory. All samples were analyzed following NEESA Level D protocol (USEPA DQO Level IV). After the samples were analyzed, the data were validated by offsite validators.

4.2.1 Dioxins and Furans Detected in Groundwater OCDD was detected in all four groundwater samples collected. The sample collected from the upgradient well, GPTHOGW-1D, and sample GPTHOGW-2 had the highest concentrations of OCDD at 215 picograms per liter (pg/ℓ) each. Sample GPTHOGW-4 from well GPT-A-4 was the only sample with detections of dioxins and furans other than OCDD (Table 4-3). This sample had positive detections of 1,2,3,4,7,8-HxCDF and 1,2,3,4,6,7,8-HpCDD of 4.30 and 7.28 pg/ℓ, respectively. Both of these detected values and the OCDD value for GPTHOGW-1D are MPCs, which means that the reported values are the maximum possible concentrations but not confirmed detections.

4.2.2 Organic Compounds Detected in Groundwater Samples GPTHOGW-1, GPTHOGW-1D, GPTHOGW-2, and GPTHOGW-4 did not exhibit any detections of volatile organic compounds (VOCs), SVOCs, PAHs, pesticides, polychlorinated biphenyls (PCBs), or organophosphorus pesticides. Figure 4-1 illustrates which group of compounds were detected and their representative values. The only VOC detected was carbon disulfide, which was estimated at 2 micrograms per liter (μg/ℓ) in sample GPTHOGW-3. Several SVOCs were detected in sample GPTHOGW-3 with the maximum detections being 430 μg/ℓ of naphthalene and 53 μg/ℓ of phenol. The only herbicide detected was 2,4,5-trichlorophenoxyacetic acid (2,4,5-T), which was detected in trace amounts in samples GPTHOGW-2 and GPTHOGW-3. Table 4-4 details all of the organic compounds detected in the samples.

4.2.3 Inorganics Detected in Groundwater Inorganics were detected in all of the samples. Table 4-5 details the inorganics detected and their associated values. Cyanide was the only inorganic detected in samples from the downgradient wells that was not detected in samples from the upgradient well. Cyanide was detected in sample GPTHOGW-3 at an estimated value of 255 μg/ℓ. Overall, sample GPTHOGW-3 had the highest detections of all inorganics with the exceptions of barium, lead, selenium, and zinc.

Table 4-1
Analytical Results of Subsurface Soil Samples

Technical Memorandum No. 1
Site A, Former Herbicide Orange Storage Area
Groundwater Sampling Event No. 1
Naval Construction Battalion Center
Gulfport, Mississippi

Analyte	GP1-A-1 7 to 9 feet	GP1-A-2 12 to 14 feet
Moisture content	12.7%	15.7%
Total organic carbon	1,390 mg/kg	1,090 mg/kg
Total petroleum hydrocarbons	<1.9 mg/kg	<2.0 mg/kg

Notes: mg/kg = milligrams per kilogram.
% = percent.

Table 4-2
Grain Size Results of Subsurface Soil Samples

Technical Memorandum No. 1
Site A, Former Herbicide Orange Storage Area
Groundwater Sampling Event No. 1
Naval Construction Battalion Center
Gulfport, Mississippi

	Percent Passing	
Sieve Size No.	GP1-A-1 7 to 9 feet	GP1-A-2 12 to 14 feet
20	97.4	97.7
40	84.4	79.6
80	18.0	7.8
100	11.2	3.2
200	7.9	1.6
<200	7.8	1.6

Table 4-3
Dioxins and Furans Detected in Groundwater

Technical Memorandum No. 1
Site A, Former Herbicide Orange Storage Area
Groundwater Sampling Event No. 1
Naval Construction Battalion Center
Gulfport, Mississippi

Analyte	GPTHOGW-1	GPTHOGW-1D	GPTHOGW-2	GPTHOGW-3	GPTHOGW-4
1,2,3,4,7,8-Hexachlorodibenzofuran	ND	ND	ND	ND	4.30[1]
1,2,3,4,6,7,8-Heptachlorodibenzo-p-dioxin	ND	ND	ND	ND	7.28[1]
Octachlorodibenzodioxin	133	215	215	116	59.6

[1] Maximum possible concentration.

Notes: All concentrations are reported in picograms per liter.

ND = not detected.

Table 4-4
Organic Compounds Detected in Groundwater

Technical Memorandum No. 1
Site A, Former Herbicide Orange Storage Area
Groundwater Sampling Event No. 1
Naval Construction Battalion Center
Gulfport, Mississippi

Analyte	GPTHOGW-1	GPTHOGW-1D	GPTHOGW-2	GPTHOGW-3	GPTHOGW-4
Volatile Organic Compounds					
Carbon disulfide	ND	ND	ND	2 J	ND
Semivolatile Organic Compounds					
Phenol	ND	ND	ND	53	ND
2-Chlorophenol	ND	ND	ND	10 J	ND
4-Methylphenol	ND	ND	ND	8 J	ND
Benzoic acid	ND	ND	ND	13 J	ND
2,4-Dichlorophenol	ND	ND	ND	8 J	ND
Naphthalene	ND	ND	ND	430	ND
2,4,5-Trichlorophenol	ND	ND	ND	8 J	ND
bis(2-Ethylhexyl)phthalate	ND	ND	ND	38	ND
Polynuclear Aromatic Hydrocarbons	ND	ND	ND	ND	ND
Pesticide and PCB	ND	ND	ND	ND	ND
Organophosphorus Pesticide	ND	ND	ND	ND	ND
Herbicide					
2,4,5-trichlorophenoxyacetic acid	ND	ND	1.5	2.7	ND

Notes: $\mu g/\ell$ = micrograms per liter.
ND = not detected.
J = estimated value.
PCB = polychlorinated biphenyls.

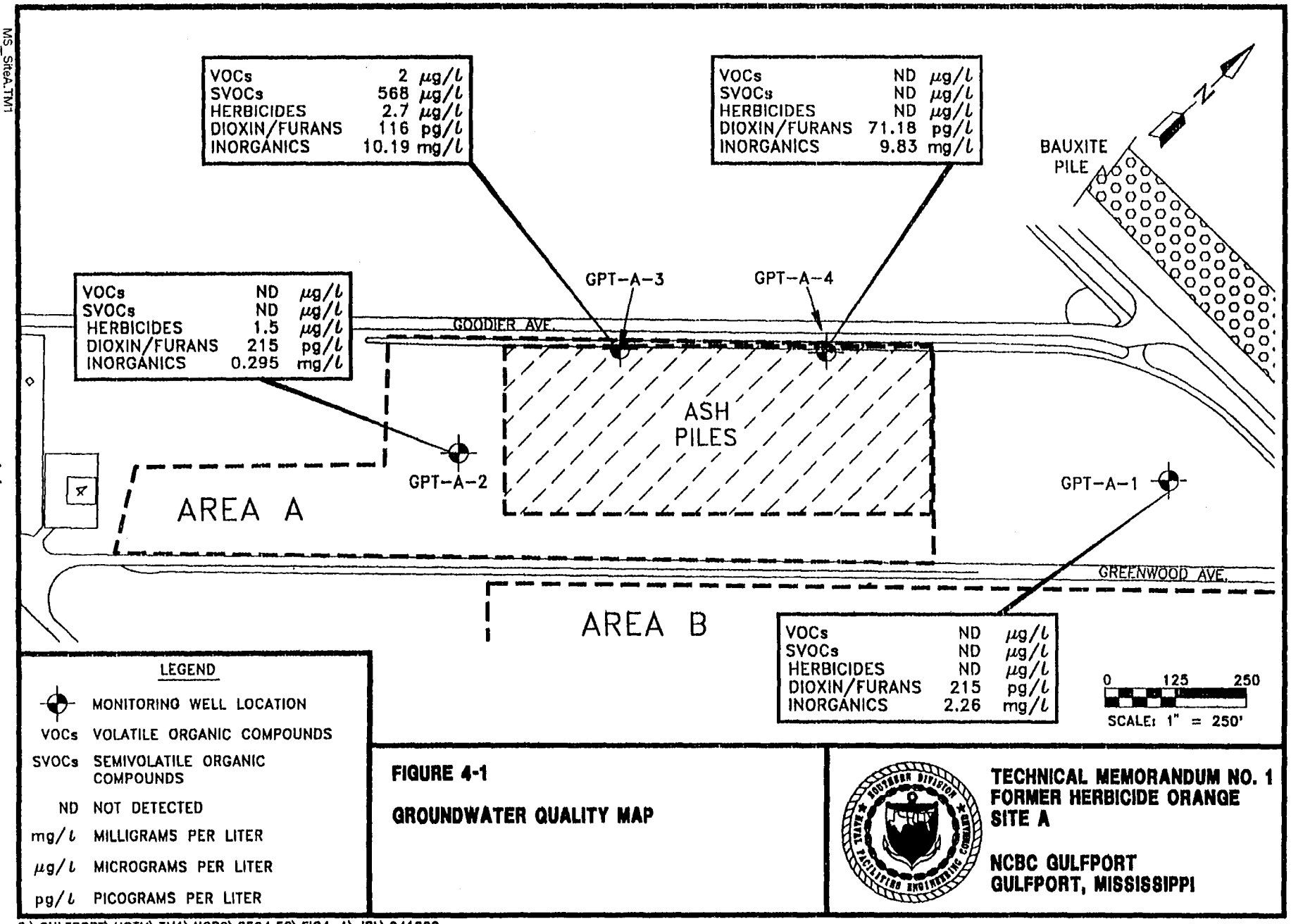

FIGURE 4-1

GROUNDWATER QUALITY MAP

TECHNICAL MEMORANDUM NO. 1
FORMER HERBICIDE ORANGE SITE A

NCBC GULFPORT
GULFPORT, MISSISSIPPI

C:\GULFPORT\HOTM\TM1\NCBC\8504.50\FIG4-1\JSL\941209

MS_SiteA.TM1
MVL(mlv).11.94

Table 4-5
Inorganics Detected in Groundwater

Technical Memorandum No. 1
Site A, Former Herbicide Orange Storage Area
Groundwater Sampling Event No. 1
Naval Construction Battalion Center
Gulfport, Mississippi

Analyte	GPTHOGW-1 (µg/ℓ)	GPTHOGW-1D (µg/ℓ)	GPTHOGW-2 (µg/ℓ)	GPTHOGW-3 (µg/ℓ)	GPTHOGW-4 (µg/ℓ)
Arsenic	19.2 J	26.9 J	9.2 J	35.4 J	12.7 J
Barium	166 J	198 J	123 J	174 J	238
Beryllium	1.2 J	1.7 J	1.2 J	5.5	1.4 J
Chromium	26.6	56.3	30.7	83.5	81.0
Cobalt	12.1 J	22.2 J	5.2 J	30.1 J	12.9 J
Lead	19.8 J	25.5 J	14.3 J	28.4 J	36.8 J
Mercury	0.10 J	ND	0.24	0.51	0.50
Nickel	37.0 J	52.5	23.0 J	79.2	35.0 J
Selenium	ND	0.83 J	1.4 J	8.4 J	13.9 J
Silver	3.4 J	ND	ND	ND	ND
Vanadium	49.1 J	74.7 J	42.6 J	153	122
Zinc	87.9	93.3	42.9	41.1	24.9
Cyanide	ND	ND	1.0 J	255 J	51.2 J
Sulfide	1,000	1,700	ND	9,300	9,200

Notes: µg/ℓ = micrograms per kilogram.
J = estimated value.
ND = not detected.

4.3 CONCLUSIONS. Analytical results for Site A indicate concentrations of detected organic compounds and inorganic chemicals near quantitative limits. The soil samples exhibited TPH values of less than 2 milligrams per kilogram (mg/kg) and total organic carbon values of 1,090 and 1,390 mg/kg. Grain sieve results resemble fine- to medium-grained sand with little silt.

OCDD was detected in all of the groundwater samples. 2,3,7,8-TCDD is considered to be the most potent carcinogen in this family. Toxicologists believe that polychlorinated dibenzodioxins and polychlorinated dibenzofurans (PCDDs/PCDFs) with chlorine atoms at the 2, 3, 7, and 8 positions (2,3,7,8 substituted compounds) in their molecules can mimic the toxic properties of 2,3,7,8-TCDD. The USEPA developed Toxicity Equivalency Factors (TEFs) to quantify the carcinogenicity of these compounds relative to 2,3,7,8-TCDD. Concentrations of PCDDs/PCDFs in a sample are multiplied by TEFs to determine a 2,3,7,8-TCDD equivalent concentration.

In Table 4-6, the maximum concentration for each PCDD/PCDF compound detected is shown multiplied by the TEF for that compound. The total of these values is then

Table 4-6
Maximum Chemical Concentrations in Groundwater

Technical Memorandum No. 1
Site A, Former Herbicide Orange Storage Area
Groundwater Sampling Event No. 1
Naval Construction Battalion Center
Gulfport, Mississippi

Analyte	Maximum Detection Concentration	TEF Equivalent	TCDD Equivalent	MCL
Dioxin and Furans (pg/ℓ)				
1,2,3,4,7,8-Hexachlorodibenzofuran	4.30	0.1	0.430	
1,2,3,4,6,7,8-Heptachlorodibenzo-p-dioxin	7.28	0.01	0.0728	
Octachlorodibenzodioxin	215	0.001	0.215	
			Total 0.7178	30[1]
Volatile Organic Compounds (μg/ℓ)				
Carbon disulfide	2 J			NA
Semivolatile Organic Compounds (μg/ℓ)				
Phenol	53			NA
2-Chlorophenol	10 J			NA
4-Methylphenol	8 J			NA
Benzoic acid	13 J			
2,4-Dichlorophenol	8 J			NA
Naphthalene	430			NA
2,4,5-Trichlorophenol	8 J			NA
bis(2-Ethylhexyl)phthalate	38			
Herbicides (μg/ℓ)				
2,4,5-Trichlorophenoxyacetic acid	2.7			NA
Inorganics (μg/ℓ)				
Arsenic	35.4 J			50
Barium	238			2,000
Beryllium	5.5			4
Chromium	83.5			100
Cobalt	30.1 J			NA
Lead	36.8 J			15
Mercury	0.51			2
Nickel	79.2			100
Selenium	8.4			50
Silver	3.4 J			100[2]
Vanadium	153			NA
Zinc	93.3			NA
Cyanide	255 J			200
Sulfide	9.3			NA

[1] The maximum contamination level (MCL) for 2,3,7,8-tetrachlorodibenzo-p-dioxin is 30 picograms per liter.
[2] Secondary MCL.

Notes: TEF = toxic equivalency factors.
TCDD = tetrachlorodibenzodioxin.
MCL = maximum contaminant limit.
pg/ℓ = picograms per liter.
μg/ℓ = micrograms per liter.
J = estimated value.
NA = not applicable.

compared to the maximum contaminant level (MCL) for 2,3,7,8-TCDD, which is 30 pg/ℓ. The total toxic equivalency for the three PCDD/PCDF compounds detected is several orders of magnitude lower than the MCL for 2,3,7,8-TCDD. Groundwater downgradient of Site A does not appear to have dioxin and furan concentrations higher than the upgradient groundwater based on sample ordinal ranking. Upon completion of the annual groundwater monitoring sampling and analysis, however, data from the upgradient and downgradient wells will be compared to determine if statistically significant differences exist.

Only one VOC was detected at an estimated concentration near quantitation limits; low concentrations of SVOCs were detected; no PAHs, pesticides, PCBs, or organophosphorus pesticides were detected; and only one herbicide was detected. None of the maximum concentrations detected in the groundwater samples exceeded their associated MCLs.

Inorganic contamination is present in upgradient and downgradient groundwater across Site A. Cyanide was the only inorganic compound detected in samples from the downgradient wells that was not detected in samples from the upgradient well. Levels of inorganic chemicals vary from minimal to exceeding MCLs. Maximum detections of beryllium, lead, and cyanide exceed their established MCLs. Upgradient groundwater samples had levels of lead that also exceed their established MCLs.

5.0 SUMMARY

This investigation is part of an ongoing delisting process at Site A, which was an HO storage area from 1965 until 1977. During the February 1994 field effort, eight well points were installed to determine the direction of groundwater flow. Water level information suggests that groundwater flow is westward across Site A.

Four monitoring wells, three downgradient and one upgradient, were installed in April 1994. These wells are part of a quarterly groundwater sampling plan to determine if contamination from Site A extends to the water table.

Two subsurface soil samples were taken during the monitoring well installation and analyzed for percent moisture, total organic carbon, TPH, and grain size. The samples indicated moderate total organic carbon, low TPH, and sand that is medium- to fine-grained with little silt.

Groundwater samples were collected in May 1994 and analyzed for a full Appendix IX and sulfide analyses, PAH (USEPA Method 8310) analyses, and dioxin and furans (USEPA Method 1613) analyses. Samples were collected, analyzed, and validated according to Level IV DQOs. Data quality and useability were good and met the 85 percent completeness goal.

Groundwater samples from the upgradient and downgradient wells exhibited positive OCDD results. Sample GPTHOGW-4 also had positive detections of 1,2,3,4,7,8-HxCDF and 1,2,3,4,6,7,8-HpCDD. The maximum 2,3,7,8-TCDD equivalent concentration detected was 0.7178 pg/ℓ. The MCL for 2,3,7,8-TCDD is 30 pg/ℓ, which far exceeds 0.7178 pg/ℓ.

None of the organic compounds that were analyzed exceeded their associated MCL. Three inorganic chemicals exceeded their associated MCLs: beryllium, lead, and cyanide. Samples from the upgradient well also exceeded MCLs for lead. Cyanide is the only inorganic compound that was detected in samples from the downgradient wells and not in samples from the upgradient well.

The first round of groundwater sample analyses reported minor concentrations of organic compounds and inorganic chemicals. Three more rounds of groundwater samples will be taken quarterly throughout the year. Upgradient and downgradient monitoring well data will be compared to determine if a statistically significant difference does not exist to support the hypothesis that a release to groundwater has not occurred from Site A.

APPENDIX A

SOIL BORING LOGS AND MONITORING WELL CONSTRUCTION LOGS

REFERENCES

ABB Environmental Services, Inc. (ABB-ES), 1993a, Monitoring Well Installation Plan, Former Herbicide Orange Site, Gulfport Mississippi: prepared for Southern Division, Naval Facilities Engineering Command (SOUTHNAVFACENGCOM), November.

ABB-ES, 1993b, Addendum to Versar Sampling and Analysis Plan, Former Herbicide Orange Site A, November: prepared for SOUTHNAVFACENGCOM.

ABB-ES, 1994, Health and Safety Plan: prepared for SOUTHNAVFACENGCOM.

Dames and Moore, 1990, Remedial Characterization and Soil Remediation Technology Review for the Former Herbicide Storage Site at the Naval Construction Battalion Center, Gulfport, Mississippi: Draft, October.

EG&G, 1991, Full-Scale Incineration System Demonstration at the Naval Construction Battalion Center, Gulfport, Mississippi: April.

Federal Register, 1989, Hazardous Waste Management System; Use of Ground-Water Data in Delisting Decisions: Volume 54, No. 196, October 12, 1989, pages 41930-41937.

Hazardous Waste Remedial Actions Program (HAZWRAP), 1991, Summary Report Remedial Characterization and Soil Remediation Technology Review for the Former Herbicide Storage Site at the Naval Construction Battalion Center, Gulfport, Mississippi: Hazardous Waste Remedial Actions Program, Oak Ridge, Tennessee, August.

Naval Energy and Environmental Support Activity (NEESA), 1988, Sampling and Chemical Analysis Quality Assurance Requirements for the Navy Installation Restoration Program: NEESA 20.2-047B, Port Hueneme, California.

U.S. Geological Survey, 1927, North American Datum.

U.S. Environmental Protection Agency (USEPA), 1986, Test Methods for Evaluating Solid Waste, Physical/Chemical Methods (SW-846): 3rd Edition, USEPA.

USEPA, 1988, Laboratory Data Validation: Functional Guidelines For Evaluating Inorganics Analyses: July.

USEPA, 1990, Contract Laboratory Program, Statement of Work for Organics Analysis: USEPA Document No. OLM01.8, last revised August 1991.

USEPA, 1991, National Functional Guidelines for Organic Data Review: Office of Emergency and Remedial Response, June.

Versar, 1990, Ground-Water Monitoring Program Plan, Naval Construction Battalion Center, Gulfport, Mississippi: November 20.

FIELD BORING LOG			BORING NO.: GPT-A-01
PROJECT NO.: 8504.30	PROJECT NAME: NCBC H.O. II		PAGE 1 OF 1
DRILLING CONTRACTOR: Ivey Drilling	DRILLER: E. Fuller	DATE STARTED: 4-12-94	COMPLETED: 4-12-94
METHOD: HSA	AUGER SIZE: 4.25"	OVA: FID	PROTECTION LEVEL: MODIFIED LEVEL D
GROUND ELEV.: NA	SOIL DRILLED: Sand	WATER LEVEL: 3.0'	TOTAL DEPTH: 15'
LOGGED BY: R. Fisher	CHECKED BY: R. Fisher	DATE: 4-12-94	

SAMPLE NO.	DEPTH IN FEET	BLOWS PER 6-INCHES	PEN. REC.	DESCRIPTION	LAB	FIELD SCREENING		MONITORING	
						FID	UV\IR	TIP	LEL
	0 - 3	HSA		Dark brown and gray silty clay with some sand, cohesive and dry		0 ppm			
	3 - 5	2,4,3,8	24/8	Gray fine to medium sand with some silt, moist		70 ppm			
	5 - 7	5,10,11,12	24/22	5.0' - 6.5' gray fine to medium sand, wet		70 ppm			
				6.5' - 7.0' dark brown medium sand with some silt, wet		30 ppm			
GPT-A-01	7 - 9	1,3,4,8	24/16	7.0' - 8.0' dark brown silty sand, wet		20 ppm			
				8.0' - 9.0' dark brown medium sand with some fine sand, wet		10 ppm			
	9 - 11	6,6,7,12	24/18	Dark brown medium sand, fine gravel lens at 10'		0 ppm			
	11 - 13	3,5,14,21	24/18	11.0' - 12.0' dark brown medium sand		0 ppm			
				12.0' - 13.0' fine to medium gray sand, wet		0 ppm			
	13 - 15	2,2,7,9	24/20	Light gray fine sand with some silt, wet		0 ppm			

TITLE: Gulfport HO II		**LOG of WELL:** GPT-A-01	**BORING NO.** GPT-A-01
CLIENT: U.S. NAVY, SOUTHNAVFACENGCOM			**PROJECT NO:** 8504-30
CONTRACTOR: Ivey Drilling		**DATE STARTED:** 04/12/94	**COMPLTD:** 04/12/94
METHOD: HSA	**CASE SIZE:** 2"	**BORING DIA.:** 8.75"	**PROTECTION LEVEL:** D
TOC ELEV.: NA FT.	**MONITOR INST.:** FID	**TOT DPTH:** 15.0FT.	**DPTH TO ▽** 3.0 FT.
LOGGED BY: R. Fisher	**WELL DEVELOPMENT DATE:** 4/16/94		**SITE:** Site A, Former HO Storage Area

DEPTH FT.	LABORATORY SAMPLE ID	SAMPLE	RECOVERY	HEADSPACE (ppm)	SOIL/ROCK DESCRIPTION AND COMMENTS	LITHOLOGIC SYMBOL	SOIL CLASS	
				0	Silty clay, dark brown and gray with some sand, cohesive and dry.		CL	
				70	Sand, fine to medium with some silt, gray, moist.		SM	2,4,3,8
			8"					
5				70	Sand, fine to medium, gray, wet.			5,10,11,12
			22"					
				30	Sand, medium with some silt, dark brown, wet.			
				20	Silty sand, dark brown, wet.			1,3,4,8
			18"	10	Sand, medium with some fine, dark brown, wet.			
				0	Sand, medium, dark brown. Fine gravel lens at 10 ft.			6,6,7,12
10			18"					
				0	Sand, medium, dark brown.			3,5,14,21
			18"		Sand, fine to medium, gray, wet.			
				0	Sand, fine with some silt, light gray, wet.			2,2,7,9
			20"					
15					total depth = 15.0 ft.			
20								

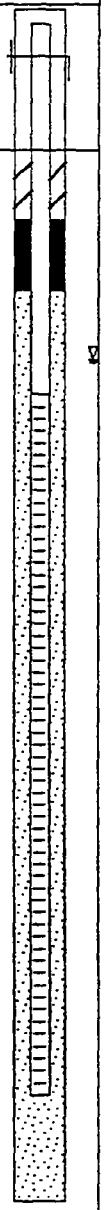

MS_SiteA.TM1
mlv.11.94

ABB ENVIRONMENTAL SERVICES, INC.

DEPARTMENT OF THE NAVY
SOUTHERN DIVISION
NAVAL FACILITIES ENGINEERING COMMAND
2155 EAGLE DRIVE, P. O. Box 190010
NORTH CHARLESTON, S.C. 29419-9010

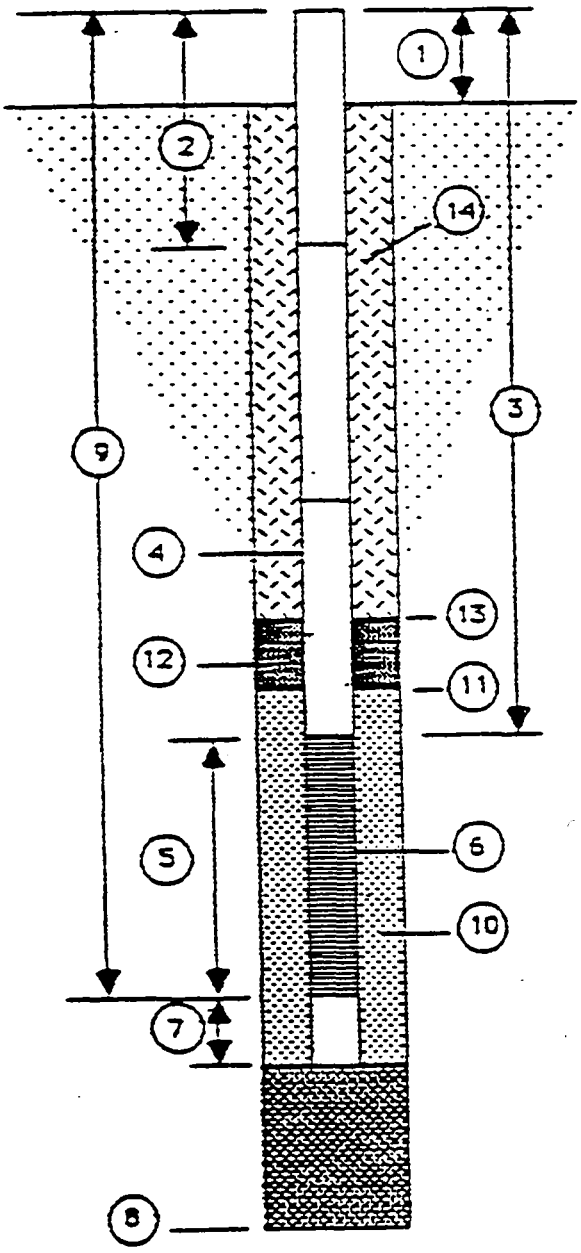

WELL CONSTRUCTION DETAILS

WELL NUMBER GPT-A-01

DATE OF INSTALLATION 4-12-94

1. **Height of Casing Above Ground** 2.5'
2. **Depth to first Coupling** 3.5'

   Coupling Interval Depths NA
3. **Total Length of Blank Pipe** 3.5'
4. **Type of Blank Pipe** 2" Sch 10S, Type 304 Stainless Steel
5. **Length of Screen** 10'
6. **Type of Screen** 0.020-slot, 2" Sch 10S Type 304 Stainless Steel
7. **Length of Sump** NA
8. **Total Depth of Boring** 15' **Hole Diameter** 8.75"
9. **Depth to Bottom of Screen** 13.5'
10. **Type of Screen Filter** Silica Sand

    Quantity Used 200 lbs **Size** 20/30 **U/C** _____
11. **Depth to Top of Filter** 2'
12. **Type of Seal** Bentonite chips

    Quantity Used 50 lbs
13. **Depth to Top of Seal** 1'
14. **Type of Grout** Neat Cement

    Grout Mixture 5% Bentonite

    Method of Placement Poured

COMMENTS ON INSTALLATION:

WELL DEVELOPMENT DATA SHEET

ABB-ES

WELL DESIGNATION: GPT-A-01 DATE OF DEVELOPMENT: 4-18-94

DATE OF WELL INSTALLATION: 4-12-94 PERSONNEL: R. Fisher

STATIC WATER LEVEL BEFORE DEVELOPMENT: 4.01' btoc BOTTOM OF WELL: 16.9' btoc

HEIGHT OF WATER COLUMN: 12.89' WELL I.D.: 2.0" HEIGHT OF SATURATED SANDPACK: 12.89'

GALLONS\VOLUME: 2.1 GAL X 3 VOLUMES = 6.3 GAL TOTAL DEVELOPMENT VOLUME

FIELD MEASUREMENTS

	VOLUME NO. 1 (INITIAL SAMPLE)	VOLUME NO. 2 (20 GAL)	VOLUME NO. 3 (40 GAL)	VOLUME NO. 4 (55 GAL)	VOLUME NO. 5 (75 GAL)	VOLUME NO. 6 (110 GAL)
pH	6.27	6.45	6.48	6.40	6.65	6.64
Conduct.	221	138	109	100	96	90
Temp.	26 °C	21 °C	22 °C	21.5 °C	21 °C	21 °C
Descrip.	light brown, slightly turbid	brown, turbid	brown, turbid		light brown, medium turbidity	very light tan, slightly turbid

TOTAL VOLUME REMOVED: 110 GAL

FINAL FIELD PARAMETERS:

pH - 6.64

Conduct. - 90 microohms

Turbid. - slight

Descrip. - 21 °C

WATER LEVEL 24 HOURS AFTER DEVELOPMENT: 4.43' btoc

* All development was performed with a surg block and submergible pump.

Comments:

Last 20 gallons much clearer.

FIELD BORING LOG			BORING NO.: GPT-A-02
PROJECT NO.: 8504.30	PROJECT NAME: NCBC H.O. II		PAGE 1 OF 1
DRILLING CONTRACTOR: Ivey Drilling	DRILLER: E. Fuller	DATE STARTED: 4-13-94	COMPLETED: 4-13-94
METHOD: HSA	AUGER SIZE: 4.25"	OVA: FID	PROTECTION LEVEL: LEVEL B
GROUND ELEV.: NA	SOIL DRILLED: Sand	WATER LEVEL:	TOTAL DEPTH: 14'
LOGGED BY: R. Fisher	CHECKED BY: R. Fisher		DATE: 4-13-94

SAMPLE NO.	DEPTH IN FEET	BLOWS PER 6-INCHES	PEN. REC.	DESCRIPTION	LAB	FIELD SCREENING		MONITORING	
						FID	UV\IR	TIP	LEL
	0 - 2	HSA		Tan/buff fine to medium sand with little silt, dry		0 ppm			
	2 - 4	3,5,5,6	24/10	Tan/buff fine to medium sand with little silt, wet		3 ppm			
	4 - 6	3,10,11,15	24/18	Tan/buff fine to medium sand with little silt, wet		3 ppm			
	6 - 8	1,1,9,11	24/16	Dark brown fine to medium sand with little silt, wet		2 ppm			
	8 - 10	5,6,7,10	24/20	Dark brown fine to medium sand with little silt, wet		0 ppm			
	10 - 12	1,5,4,7	24/24	Brown medium sand with fine gravel and a trace of cobble, wet		0 ppm			
	12 - 14	2,3,6,11	24/24	Brown medium sand with fine gravel and a trace of cobble, wet		0 ppm			
				Terminate boring at 14' bgs. Redrill with plug for monitoring well.					

TITLE: Gulfport HO II		**LOG of WELL:** GPT-A-02	**BORING NO.** GPT-A-02
CLIENT: U.S. NAVY, SOUTHNAVFACENGCOM			**PROJECT NO:** 8504-30
CONTRACTOR: Ivey Drilling		**DATE STARTED:** 04/13/94	**COMPLTD:** 04/13/94
METHOD: HSA	**CASE SIZE:** 2"	**BORING DIA.:** 8.75"	**PROTECTION LEVEL:** B
TOC ELEV.: NA FT.	**MONITOR INST.:** FID	**TOT DPTH:** 14.0FT.	**DPTH TO ∇** FT.
LOGGED BY: R. Fisher	**WELL DEVELOPMENT DATE:** 4/17/94		**SITE:** Site A, Former HO Storage Area

DEPTH FT.	LABORATORY SAMPLE ID	SAMPLE	RECOVERY	HEADSPACE (ppm)	SOIL/ROCK DESCRIPTION AND COMMENTS	LITHOLOGIC SYMBOL	SOIL CLASS	
				0	Sand, fine to medium with little silt, tan/buff, dry, fill.		SM	
			10"	3	Sand, fine to medium with little silt, tan/buff, wet.			3,5,5,8
5			18"	3	Sand, fine to medium with little silt, tan/buff, wet.			3,10,11,15
			16"	2	Sand, fine to medium with little silt, dark brown, wet.			1,1,9,11
			20"	0	Sand, fine to medium with little silt, dark brown, wet.			5,6,7,10
10			24"	0	Sand, medium with fine gravel and a trace of cobble, brown, wet.			1,5,4,7
			24"	0	Sand, medium with fine gravel and a trace of cobble, brown, wet.			2,3,8,11
					total depth = 14.0 ft.			
15								
20								

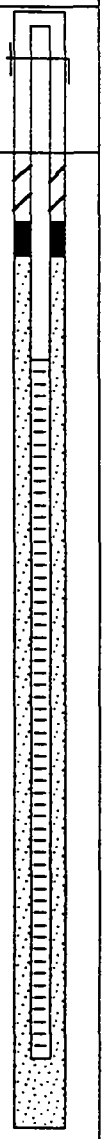

MS_SiteA.TM1
mlv.11.94

ABB ENVIRONMENTAL SERVICES, INC.

DEPARTMENT OF THE NAVY
SOUTHERN DIVISION
NAVAL FACILITIES ENGINEERING COMMAND
2155 EAGLE DRIVE, P. O. Box 190010
NORTH CHARLESTON, S.C. 29419-9010

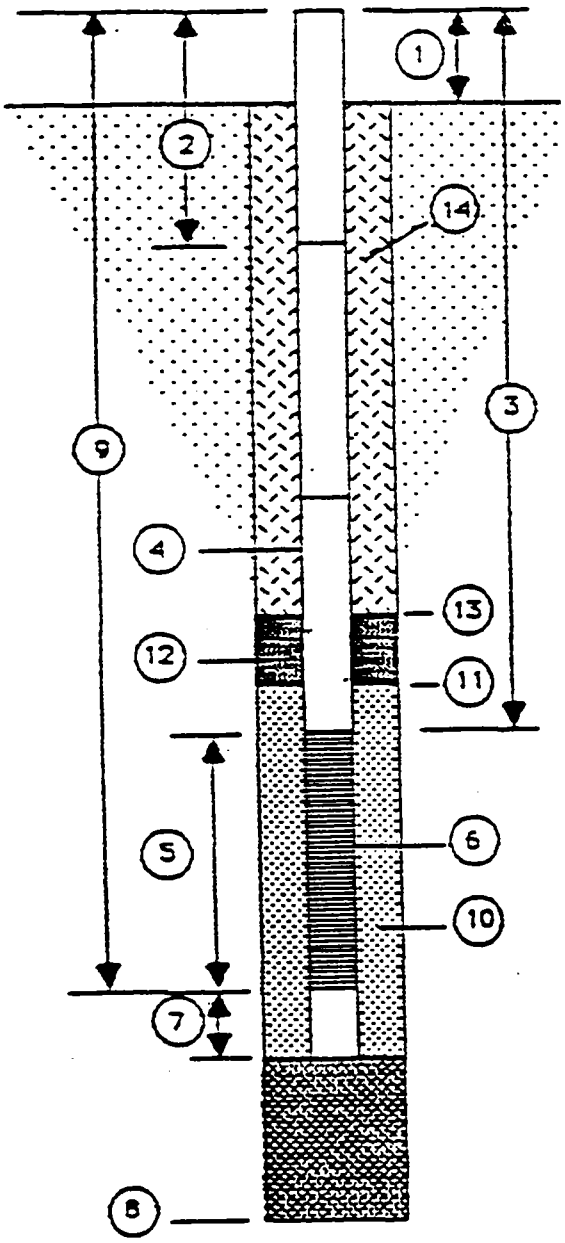

WELL CONSTRUCTION DETAILS

WELL NUMBER GPT-A-02

DATE OF INSTALLATION 4-13-94

1. **Height of Casing Above Ground** 2.5'
2. **Depth to first Coupling** 3.5'

   Coupling Interval Depths NA
3. **Total Length of Blank Pipe** 3.5'
4. **Type of Blank Pipe** 2" Sch 10S, Type 304 Stainless Steel
5. **Length of Screen** 10'
6. **Type of Screen** 0.020-slot, 2" Sch 10S Type 304 Stainless Steel
7. **Length of Sump** NA
8. **Total Depth of Boring** 14' **Hole Diameter** 8.75"
9. **Depth to Bottom of Screen** 13'
10. **Type of Screen Filter** Silica Sand

    Quantity Used 150 lbs **Size** 20/30 **U/C** _____
11. **Depth to Top of Filter** 1.5'
12. **Type of Seal** Bentonite chips

    Quantity Used 60 lbs
13. **Depth to Top of Seal** 1'
14. **Type of Grout** Neat Cement

    Grout Mixture 5% Bentonite

    Method of Placement Poured

COMMENTS ON INSTALLATION:

WELL DEVELOPMENT DATA SHEET

ABB-ES

WELL DESIGNATION: GPT-A-02 DATE OF DEVELOPMENT: 4-17-94

DATE OF WELL INSTALLATION: 4-13-94 PERSONNEL: R. Fisher

STATIC WATER LEVEL BEFORE DEVELOPMENT: 4.09' btoc BOTTOM OF WELL: 16.1' btoc

HEIGHT OF WATER COLUMN: 12.01' WELL I.D.: 2.0" HEIGHT OF SATURATED SANDPACK: 12.01'

GALLONS\VOLUME: 1.96 GAL X 3 VOLUMES = 5.88 GAL TOTAL DEVELOPMENT VOLUME

FIELD MEASUREMENTS

	VOLUME NO. 1 (INITIAL SAMPLE)	VOLUME NO. 2 (30 GAL)	VOLUME NO. 3 (75 GAL)	VOLUME NO. 4 (110 GAL)
pH	6.74	6.50	6.56	6.46
Conduct.	120	110	120	120
Temp.	20 °C	20 °C	20.5 °C	21 °C
Descrip.	very turbid	very turbid	turbid	turbid

TOTAL VOLUME REMOVED: 110 GAL

FINAL FIELD PARAMETERS:
pH - 6.46
Conduct. - 120 microohms
Turbid. - turbid
Descrip. - 21 °C

WATER LEVEL 24 HOURS AFTER DEVELOPMENT: 4.75' btoc

* All development was performed with a surg block and submergible pump.

Comments:

FIELD BORING LOG			BORING NO.: GPT-A-03
PROJECT NO.: 8504.30	PROJECT NAME: NCBC H.O. II		PAGE 1 OF 1
DRILLING CONTRACTOR: Ivey Drilling	DRILLER: E. Fuller	DATE STARTED: 4-14-94	COMPLETED: 4-14-94
METHOD: HSA	AUGER SIZE: 4.25"	OVA: FID	PROTECTION LEVEL: LEVEL B
GROUND ELEV.: NA	SOIL DRILLED: Sand	WATER LEVEL: 3.5'	TOTAL DEPTH: 14'
LOGGED BY: R. Fisher	CHECKED BY: R. Fisher	DATE: 4-14-94	

SAMPLE NO.	DEPTH IN FEET	BLOWS PER 6-INCHES	PEN. REC.	DESCRIPTION	LAB	FIELD SCREENING		MONITORING	
						FID	UV\IR	TIP	LEL
	0 - 3	HSA		Silt with same sand, cohesive, moist		5 ppm			
	3 - 8	HSA		Fine to medium sand, light brown with some silt, moist to wet		60 ppm max.			
	8 - 14	HSA		Fine to medium sand, light brown with some silt, wet		10 ppm			

TITLE: Gulfport HO II		**LOG of WELL:** GPT-A-03	**BORING NO.** GPT-A-03
CLIENT: U.S. NAVY, SOUTHNAVFACENGCOM			**PROJECT NO:** 8504-30
CONTRACTOR: Ivey Drilling		**DATE STARTED:** 04/14/94	**COMPLTD:** 04/14/94
METHOD: HSA	**CASE SIZE:** 2"	**BORING DIA.:** 8.75"	**PROTECTION LEVEL:** B
TOC ELEV.: NA FT.	**MONITOR INST.:** FID	**TOT DPTH:** 14.0FT.	**DPTH TO ∇** FT.
LOGGED BY: R. Fisher	**WELL DEVELOPMENT DATE:** 4/18/94		**SITE:** Site A, Former HO Storage Area

DEPTH FT.	LABORATORY SAMPLE ID	SAMPLE	RECOVERY	HEADSPACE (ppm)	SOIL/ROCK DESCRIPTION AND COMMENTS	LITHOLOGIC SYMBOL	SOIL CLASS
				5	Silt, with some sand, cohesive, moist.		SM
				60 max	Sand, fine to medium with some silt, light brown, moist to wet.		
5							
				10	Sand, fine to medium with some silt, light brown, wet.		
10							
					total depth = 14.0 ft.		
15							
20							

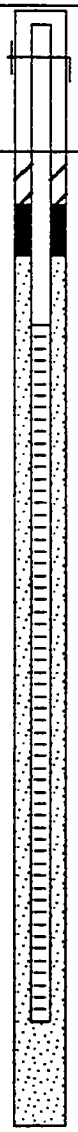

MS_SiteA.TM1
mlv.11.94

ABB ENVIRONMENTAL SERVICES, INC.

DEPARTMENT OF THE NAVY
SOUTHERN DIVISION
NAVAL FACILITIES ENGINEERING COMMAND
2155 EAGLE DRIVE, P. O. Box 190010
NORTH CHARLESTON, S.C. 29419-9010

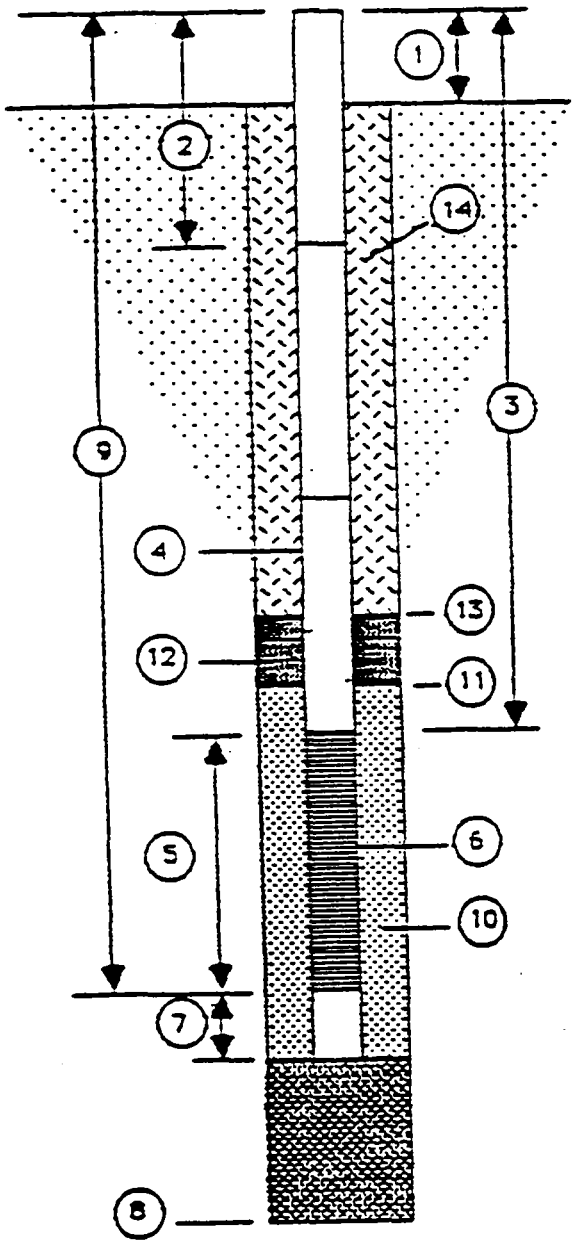

WELL CONSTRUCTION DETAILS

WELL NUMBER GPT-A-03

DATE OF INSTALLATION 4-14-94

1. **Height of Casing Above Ground** 2.5'
2. **Depth to first Coupling** 3.25'

   Coupling Interval Depths NA
3. **Total Length of Blank Pipe** 3.25'
4. **Type of Blank Pipe** 2" Sch 10S, Type 304 Stainless Steel
5. **Length of Screen** 10'
6. **Type of Screen** 0.020-slot, 2" Sch 10S Type 304 Stainless Steel
7. **Length of Sump** NA
8. **Total Depth of Boring** 14' **Hole Diameter** 8.75"
9. **Depth to Bottom of Screen** 12.5'
10. **Type of Screen Filter** Silica Sand

    Quantity Used 200 lbs **Size** 20/30 **U/C** _____
11. **Depth to Top of Filter** 1.5'
12. **Type of Seal** Bentonite chips

    Quantity Used 50 lbs
13. **Depth to Top of Seal** 0.75'
14. **Type of Grout** Neat Cement

    Grout Mixture 5% Bentonite

    Method of Placement Poured

COMMENTS ON INSTALLATION:

WELL DEVELOPMENT DATA SHEET

ABB-ES

WELL DESIGNATION: GPT-A-03 DATE OF DEVELOPMENT: 4-16-94

DATE OF WELL INSTALLATION: 4-14-94 PERSONNEL: R. Fisher/K. Kelly

STATIC WATER LEVEL BEFORE DEVELOPMENT: 7.14' btoc BOTTOM OF WELL: 15.0' btoc

HEIGHT OF WATER COLUMN: 7.86' WELL I.D.: 2.0" HEIGHT OF SATURATED SANDPACK: 7.86'

GALLONS\VOLUME: 1.3 GAL X 3 VOLUMES = 3.9 GAL TOTAL DEVELOPMENT VOLUME

FIELD MEASUREMENTS

	VOLUME NO. 1 (INITIAL SAMPLE)	VOLUME NO. 2 (20 GAL)	VOLUME NO. 3 (40 GAL)	VOLUME NO. 4 (50 GAL)	VOLUME NO. 5 (80 GAL)	VOLUME NO. 6 (100 GAL)
pH	5.04	5.14	5.50	5.71	5.43	6.01
Conduct.	140	109	101	101	90	95
Temp.	19 °C	19 °C	19 °C	21 °C	20 °C	20 °C
Descrip.	brown, turbid	brown, slightly turbid	brown, slightly turbid	brown, slightly turbid	brown, slightly turbid	

TOTAL VOLUME REMOVED: 100 GAL FINAL FIELD PARAMETERS: pH - 6.01

Conduct. - 95 microohms

Turbid. -

Descrip. - 20 °C

WATER LEVEL 24 HOURS AFTER DEVELOPMENT: 7.48' btoc

* All development was performed with a surg block and submergible pump.

Comments:

FIELD BORING LOG			BORING NO.: GPT-A-04
PROJECT NO.: 8504.30	PROJECT NAME: NCBC H.O. II		PAGE 1 OF 1
DRILLING CONTRACTOR: Ivey Drilling	DRILLER: E. Fuller	DATE STARTED: 4-14-94	COMPLETED: 4-14-94
METHOD: HSA	AUGER SIZE: 4.25"	OVA: FID	PROTECTION LEVEL: LEVEL B
GROUND ELEV.: NA	SOIL DRILLED: Sand	WATER LEVEL: 3.5'	TOTAL DEPTH: 13'
LOGGED BY: R. Fisher	CHECKED BY: R. Fisher	DATE: 4-14-94	

SAMPLE NO.	DEPTH IN FEET	BLOWS PER 6-INCHES	PEN. / REC.	DESCRIPTION	LAB	FIELD SCREENING		MONITORING	
						FID	UV\IR	TIP	LEL
	0 - 2			Light brown silty sand, fill		0 ppm			
	2 - 13			Gray medium sand with fine sand and little silt		50 ppm at 8' bgs			
				Terminate boring at 13'					

TITLE: Gulfport HO II	**LOG of WELL:** GPT-A-04	**BORING NO.** GPT-A-04
CLIENT: U.S. NAVY, SOUTHNAVFACENGCOM		**PROJECT NO:** 8504-30
CONTRACTOR: Ivey Drilling	**DATE STARTED:** 04/14/94	**COMPLTD:** 04/14/94
METHOD: HSA	**CASE SIZE:** 2" / **BORING DIA.:** 8.75"	**PROTECTION LEVEL:** B
TOC ELEV.: NA FT.	**MONITOR INST.:** FID / **TOT DPTH:** 13.0FT.	**DPTH TO ∇** FT.
LOGGED BY: R. Fisher	**WELL DEVELOPMENT DATE:** 4/18/94	**SITE:** Site A, Former HO Storage Area

DEPTH FT.	LABORATORY SAMPLE ID	SAMPLE	RECOVERY	HEADSPACE (ppm)	SOIL/ROCK DESCRIPTION AND COMMENTS	LITHOLOGIC SYMBOL	SOIL CLASS
				0	Silty sand, light brown, fill.		SM
					Sand, medium with fine, little silt, gray.		
5							
				50			
10							
					total depth = 13.0 ft.		
15							
20							

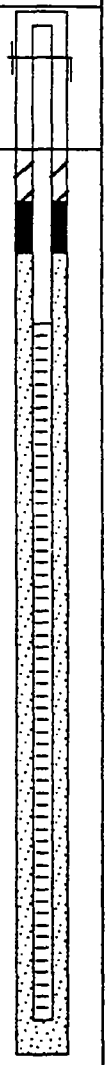

MS_SiteA.TM1
mlv.11.94

ABB ENVIRONMENTAL SERVICES, INC.

DEPARTMENT OF THE NAVY
SOUTHERN DIVISION
NAVAL FACILITIES ENGINEERING COMMAND
2155 EAGLE DRIVE, P. O. Box 190010
NORTH CHARLESTON, S.C. 29419-9010

WELL CONSTRUCTION DETAILS

WELL NUMBER GPT-A-04

DATE OF INSTALLATION 4-14-94

1. **Height of Casing Above Ground** 2.5'
2. **Depth to first Coupling** 3.25'

   Coupling Interval Depths NA
3. **Total Length of Blank Pipe** 3.25'
4. **Type of Blank Pipe** 2" Sch 10S, Type 304 Stainless Steel
5. **Length of Screen** 10'
6. **Type of Screen** 0.020-slot, 2" Sch 10S Type 304 Stainless Steel
7. **Length of Sump** NA
8. **Total Depth of Boring** 13' **Hole Diameter** 8.75"
9. **Depth to Bottom of Screen** 12.5'
10. **Type of Screen Filter** Silica Sand

    Quantity Used 200 lbs **Size** 20/30 **U/C** _____
11. **Depth to Top of Filter** 1.5'
12. **Type of Seal** Bentonite chips

    Quantity Used 50 lbs
13. **Depth to Top of Seal** 0.75'
14. **Type of Grout** Neat Cement

    Grout Mixture 5% Bentonite

    Method of Placement Poured

COMMENTS ON INSTALLATION:

WELL DEVELOPMENT DATA SHEET

ABB-ES

WELL DESIGNATION: GPT-A-04 DATE OF DEVELOPMENT: 4-16-94

DATE OF WELL INSTALLATION: 4-14-94 PERSONNEL: R. Fisher/K. Kelly/A. Cohen

STATIC WATER LEVEL BEFORE DEVELOPMENT: 6.55' btoc BOTTOM OF WELL: 15.0' btoc

HEIGHT OF WATER COLUMN: 8.45' WELL I.D.: 2.0" HEIGHT OF SATURATED SANDPACK: 8.45'

GALLONS\VOLUME: 1.4 GAL X 3 VOLUMES = 4.1 GAL TOTAL DEVELOPMENT VOLUME

FIELD MEASUREMENTS

	VOLUME NO. 1 (INITIAL SAMPLE)	VOLUME NO. 2 (20 GAL)	VOLUME NO. 3 (40 GAL)	VOLUME NO. 4 (60 GAL)	VOLUME NO. 5 (110 GAL)
pH	4.75	4.76	5.14	5.58	5.33
Conduct.	221	121	98	100	106
Temp.	21 °C	20 °C	20 °C	20 °C	20 °C
Descrip.	brown, very turbid	brown, very turbid	brown, very turbid	brown, turbid	

TOTAL VOLUME REMOVED: 100 GAL FINAL FIELD PARAMETERS: pH - 5.33

Conduct. - 106 microohms

Turbid. -

Descrip. - 20 °C

WATER LEVEL 24 HOURS AFTER DEVELOPMENT: 6.83' btoc

* All development was performed with a surg block and submergible pump.

Comments:

APPENDIX B

SOILS ANALYTICAL RESULTS

Soils Analysis

PARTICLE SIZE ANALYSIS
ASTM D-422

Client Name:	ABB	Sample I.D.:	37881002
Proj. Desc. :	ABB/GULFPORT	Client Sample I.D.:	GP1-A-2
Proj. Number:	LRD01000.XY.GP	Date Analyzed:	05/06/94
Attention:	Ms. P. Baxter		

INITIAL SAMPLE MASS	Units		HYGROSCOPIC MOISTURE CONTENT	Units	
Mass Dry Sample	g	50.00	Can No.	--	[ ]
Moisture Cont	%	0.00	Gross Wet Mass	g	50.00
Corr. Dry Mass	g	50.00 (M)	Gross Dry Mass	g	50.00
Pass #10 sieve	%	100.00 (B)	Moisture Mass	g	0.00
Mass of total sample represented			Tare Mass	g	0.00
by mass used in hydrometer test			Dry Soil Mass	g	50.00
W = (M/B) x 100 =		50.00 g	Moisture Content	%	0.00

Hydrometer No.: 87026 Type: 152H
Dispersing Agent: Sodium Hexametaphosphate
Amount Used: 50 ml

Specific Gravity: 2.65

Material Retained On 75 um Sieve After Washing

STD Sieve #	Gross Mass	Tare Mass	Net Mass Indiv.	Retained Accumulative	Percent Retained Individual	Percent Retained Accumulative	STD Sieve	Accum. Percent Passing
20#	429.93	428.77	1.2	--	2.3	2.3	0.850mm	97.7
40#	404.08	395.02	9.1	10.2	18.1	20.4	0.425mm	79.6
80#	372.98	337.12	35.9	46.1	71.7	92.2	0.180mm	7.8
100#	359.84	357.53	2.3	48.4	4.6	96.8	0.150mm	3.2
200#	368.70	367.90	0.8	49.2	1.6	98.4	0.075mm	1.6
<200#	360.24	360.21	0.0	49.2	0.1	98.4	<0.075mm	1.6

Reading Time Day	Hr	Min	Elapsed Time (min)	Hydrom Reading	Temp °C	Corr. Hydrom Reading	Particle Diam. (mm)	Pct Soil Susp.
5	7	11	0	--	21.2	--	--	--
5	7	12	0.67	8.5	21.2	3.2	0.0635	6.4
5	7	42	30	7.5	21.2	2.2	0.0095	4.4
5	8	12	60	7.0	21.1	1.7	0.0068	3.4
5	11	12	240	6.5	21.0	1.2	0.0034	2.4
5	3	12	480	6.5	21.0	1.2	0.0024	2.4
6	7	12	1440	6.5	21.1	1.2	0.0014	2.4

Approved By: Fred Bickell Date: 5/6/94
Fred Bickell
Inorganics Supervisor

000007

Report of Analytical Results
INORGANICS

Date Collected: 04/12/94
Date Received: 04/15/94
Sample Matrix: Soil
Sample Description:

Client Sample ID: GP1-A-1
Lab ReferenceNum: RD-37881
Lab Sample ID: RD-37881-001

CATEGORY NAME Analytical Parameter	Result	Units	Reporting Level	Date of Analysis	Analytical Method(s)
GENERAL					
Moisture	12.7	%		04/28/94	ASTM D2216
DEMAND AND GENERAL ORGANIC					
Total Organic Carbon	1390	mg/Kg	5.0	04/26/94	EPA415.2
Total Petroleum Hydrocarbons	< 1.9	mg/Kg	1.9	05/02/94	S3550/9071/418.1

Fred Bichel 5/6/94
Approved By

(701)

Quality Analytical Laboratories (QAL), Inc. -- Redding

000004

MS_SiteA.TM1
mlv.11.94

R 5/6/94

Soils Analysis

PARTICLE SIZE ANALYSIS
ASTM D-422

Client Name:	ABB	Sample I.D.:	37881001
Proj. Desc. :	ABB/GULFPORT	Client Sample I.D.:	GP1-A-1
Proj. Number:	LRD01000.XY.GP	Date Analyzed:	05/06/94
Attention:	Ms. P. Baxter		

INITIAL SAMPLE MASS	Units		HYGROSCOPIC MOISTURE CONTENT	Units	
Mass Dry Sample	g	50.00	Can No.	--	[ ]
Moisture Cont	%	0.00	Gross Wet Mass	g	50.00
Corr. Dry Mass	g	50.00 (M)	Gross Dry Mass	g	50.00
Pass #10 sieve	%	100.00 (B)	Moisture Mass	g	0.00
Mass of total sample represented			Tare Mass	g	0.00
by mass used in hydrometer test			Dry Soil Mass	g	50.00
W = (M/B) x 100 =		50.00 g	Moisture Content	%	0.00

Hydrometer No.: 87026 Type: 152H
Dispersing Agent: Sodium Hexametaphosphate
Amount Used: 50 ml

Specific Gravity: 2.65

Material Retained On 75 um Sieve After Washing

STD Sieve #	Gross Mass	Tare Mass	Net Mass Indiv.	Retained Accumulative	Percent Retained Individual	Percent Retained Accumulative	STD Sieve	Accum. Percent Passing
20#	430.03	428.75	1.3	--	2.6	2.6	0.850mm	97.4
40#	401.59	395.05	6.5	7.8	13.1	15.6	0.425mm	84.4
80#	370.31	337.15	33.2	41.0	66.3	82.0	0.180mm	18.0
100#	361.04	357.60	3.4	44.4	6.9	88.8	0.150mm	11.2
200#	369.53	367.91	1.6	46.0	3.2	92.1	0.075mm	7.9
<200#	360.30	360.22	0.1	46.1	0.2	92.2	<0.075mm	7.8

Reading Time Day	Hr	Min	Elapsed Time (min)	Hydrom Reading	Temp °C	Corr. Hydrom Reading	Particle Diam. (mm)	Pct Soil Susp.
5	7	09	0	--	21.2	--	--	--
5	7	10	0.67	11.0	21.2	5.7	0.0626	11.4
5	7	40	30	9.0	21.2	3.7	0.0095	7.4
5	8	10	60	8.5	21.1	3.2	0.0067	6.4
5	11	10	240	8.0	21.0	2.7	0.0034	5.4
5	3	10	480	7.5	21.0	2.2	0.0024	4.4
6	7	10	1440	7.0	21.1	1.7	0.0014	3.4

Approved By: Fred Bickell
Fred Bickell
Inorganics Supervisor

Date: 5/6/94

000006

MS_SiteA.TM1
mlv.11.94

Report of Analytical Results
INORGANICS

Date Collected: 04/13/94
Date Received: 04/15/94
Sample Matrix: Soil
Sample Description:

Client Sample ID: GP1-A-2
Lab ReferenceNum: RD-37881
Lab Sample ID: RD-37881-002

CATEGORY NAME Analytical Parameter	Result	Units	Reporting Level	Date of Analysis	Analytical Method(s)
GENERAL					
Moisture	15.7	%		04/28/94	ASTM D2216
DEMAND AND GENERAL ORGANIC					
Total Organic Carbon	1090	mg/Kg	5.0	04/26/94	EPA415.2
Total Petroleum Hydrocarbons	< 2.0	mg/Kg	2.0	05/02/94	S3550/9071/418.1

(701)

Fred Bickell 5/6/94
Approved By

Quality Analytical Laboratories (QAL), Inc. -- Redding

MS_SiteA.TM1
mlv.11.94

000005
RJJ 5/6/94

20 LGN

QAL QUALITY ANALYTICAL LABORATORIES, INC.

CHAIN OF CUSTODY RECORD AND AGREEMENT TO PERFORM SERVICES

MS_SiteA.TM1
mlv.11.94

Project #: [illegible]
Purchase Order #:
Project Name: Gulfport II
Company Name: ABB Environmental Services
Project Manager & Phone #: Mr. [ ] Ms. [X] Dr. [ ] P. Pepper 601-531-1922
Report Copy to: K Kelly
Requested Completion Date: Standard
Sampling Requirements: SDWA [ ] NPDES [ ] RCRA [ ] OTHER
Sample Disposal: Dispose [X] Return [ ]

LAB TEST CODES

ANALYSES REQUESTED

SHADED AREA-- FOR LAB USE ONLY

Lab 1 #: 37881
Lab 2 #:
Quote #:
Kit Request #:
Project #:
No. of Samples:
Page:
of:
COC Rev:
Login: (CB) 4/19/94
LIMS Ver:
Ack Gen:

Sampling Date	Sampling Time	Type COMP	Type GRAB	Matrix WATER	Matrix SOIL	CLIENT SAMPLE ID (9 CHARACTERS)	# OF CONTAINERS	TKN	TPH	Sieve Analysis	Hydrometer	REMARKS	LAB 1 ID	LAB 2 ID
4/12		X			X	GPI-A-1	3	X	X	X	X		1	
4/13		X			X	GPI-A-2	3	X	X	X	X		2	

Response to: Cindy Barda 5/3/94 IN
TOC

Sampled By & Title: K Kelly — K. Kelly
Date/Time: 4/14/94
Received By: D. Wade
Date/Time: 4/19/94 1100
Received By:
Date/Time:
Relinquished By: K. Kelly — K Kelly
Date/Time: 4/14/94
Relinquished By: Bob Kelly
Date/Time: 4/18/94 1445
Relinquished By:
Date/Time:
Received By: Nicholas A. Rivera
Date/Time: 4/15/94 1415
Work Authorized By:
Remarks:
Shipped Via: UPS BUS Fed-Ex Hand Other
Shipping #: 1577941901

HAZWRAP/NESRA: N
QC Level: 1 2 3 Other: IN
COC Rec: Y
Ana Req: Y
Cust Seal: NO
ICE: Y
TEMP: 17°C
Ph:

Instructions and Agreement Provisions on Reverse Side

DISTRIBUTION: Original - LAB Yellow - LAB Pink - Client

B-5

000014

APPENDIX C

PRECISION, ACCURACY, REPRESENTATIVENESS, COMPARABILITY, AND COMPLETENESS REPORT

PRECISION, ACCURACY, REPRESENTATIVENESS, COMPARABILITY, AND COMPLETENESS FOR NCBC GULFPORT HO

NAVAL CONSTRUCTION BATTALION CENTER GULFPORT, MISSISSIPPI

Prepared by:
Heartland Environmental Services, Inc.
P.O. Box 163
St. Peters, Missouri 63376

Prepared for:

ABB Environmental Services, Inc.
1400 Centerpoint Blvd., Suite 158
Knoxville, Tennessee 37922-1968

July 1994

TABLE OF CONTENTS
Precision, Accuracy, Representativeness,
Comparability, and Completeness
NCBC Gulfport HO

Section	Title	Page No.
1.0	INTRODUCTION	1-1
2.0	PRECISION	2-1
2.1	Water Matrix	2-18
3.0	ACCURACY	3-1
3.1	Water Matrix	3-1
4.0	REPRESENTATIVENESS	4-1
4.1	Trip Blanks	4-32
4.2	Field Blanks	4-32
4.3	Equipment Rinseate Blanks	4-33
4.4	Method Blanks	4-34
4.5	Holding Times	4-35
5.0	COMPARABILITY	5-1
6.0	COMPLETENESS	6-1
7.0	PARCC SUMMARY	7-1
7.1	Water Matrix	7-1
7.3	QC Matrix	7-1

REFERENCES

APPENDICES

Appendix A: Calibration Summary
Appendix B: Serial Dilution Summary
Appendix C: Summary of Rejected Data

LIST OF TABLES
Precision, Accuracy, Representativeness,
Comparability, and Completeness
NCBC Gulfport HO

Tables	Title	Page No.
2-1	Organic Compounds, Water Sample and Duplicate Precision	2-2
2-2	Inorganic Compounds, Water Sample and Duplicate Precision	2-6
2-3	GC/MS Volatile Organic Compounds, Water Matrix Spike and Matrix Spike Duplicates	2-8
2-4	Dioxin Furan Compounds, Water Matrix Spike and Matrix Spike Duplicates	2-9
2-5	Semivolatile Organic Compounds, Water Matrix Spike and Matrix Spike Duplicates	2-10
2-6	Polynuclear Aromatic Hydrocarbons, Water Matrix Spike and Matrix Spike Duplicates	2-12
2-7	Pesticide/PCBs, Water Matrix Spike and Matrix Spike Duplicates	2-13
2-8	Organophosphorous Pesticides, Water Matrix Spike and Matrix Spike Duplicates	2-14
2-9	Herbicides, Water Matrix Spike and Matrix Spike Duplicates	2-15
2-10	Metals and Cyanide, Water Matrix and Matrix Duplicates	2-16
2-11	Sulfide, Water Matrix Spike and Matrix Duplicates	2-17
3-1	GC/MS Volatile Surrogate Recoveries in Water Matrix	3-2
3-2	Dioxin/Furan Internal Standard Recoveries in Water Matrix	3-3
3-3	Semivolatile Surrogate Recoveries in Water Matrix	3-4
3-4	Polynuclear Aromatic Hydrocarbons Surrogate Recoveries in Water Matrix	3-5
3-5	Pesticides/PCBs Surrogate Recoveries in Water Matrix	3-6
3-6	Kepone Surrogate Recoveries in Water Matrix	3-7
3-7	Organophosphorous Pesticides Surrogate Recoveries in Water Matrix	3-8
3-8	Herbicides Surrogate Recoveries in Water Matrix	3-9
4-1	GC/MS Volatiles Detected in Trip Blanks	4-2
4-2	GC/MS Volatiles Detected in Field Blanks	4-3
4-3	Dioxin/Furans Detected in Field Blanks	4-4
4-4	GC/MS Semivolatiles Detected in Field Blanks	4-5
4-5	Polynuclear Aromatic Hydrocarbons Detected in Field Blanks	4-6
4-6	Pesticide/PCBs Detected in Field Blanks	4-7
4-7	Kepone Detected in Field Blanks	4-8
4-8	Organophosphorous Pesticides Detected in Field Blanks	4-9
4-9	Herbicides Detected in Field Blanks	4-10
4-10	Metals/Cyanide Detected in Field Blanks	4-11
4-11	Sulfide Detected in Field Blanks	4-12
4-12	GC/MS Volatiles Detected in Rinseate Blanks	4-13
4-13	Dioxin/Furans Detected in Rinseate Blanks	4-14
4-14	GC/MS Semivolatiles Detected in Rinseate Blanks	4-15
4-15	Polynuclear Aromatic Hydrocarbons Detected in Rinseate Blanks	4-16
4-16	Pesticide/PCBs Detected in Rinseate Blanks	4-17
4-17	Kepone Detected in Rinseate Blanks	4-18
4-18	Organophosphorous Pesticides Detected in Rinseate Blanks	4-19
4-19	Herbicides Detected in Rinseate Blanks	4-20
4-20	Metals/Cyanide Detected in Rinseate Blanks	4-21
4-21	Sulfide Detected in Rinseate Blanks	4-22

LIST OF TABLES
Precision, Accuracy, Representativeness,
Comparability, and Completeness
NCBC Gulfport HO

Tables	Title	Page No.
4-22	GC/MS Volatiles Detected in Method Blanks	4-23
4-23	Dioxin/Furans Detected in Method Blanks	4-24
4-24	GC/MS Semivolatiles Detected in Method Blanks	4-25
4-25	Polynuclear Aromatic Hydrocarbons Detected in Method Blanks	4-26
4-26	Pesticide/PCBs Detected in Method Blanks	4-27
4-27	Kepone Detected in Method Blanks	4-28
4-28	Organophosphorous Pesticides Detected in Method Blanks	4-29
4-29	Herbicides Detected in Method Blanks	4-30
4-30	Metals/Cyanide Detected in Method Blanks	4-31
5-1	USEPA Procedure (SW-846 Methodologies	5-1
6-1	Completion Goal (>85 Percent)	6-1
7-1	PARCCs Criteria Summary, Water Samples	7-2
7-2	PARCCs Criteria Summary, Quality Control Samples	7-4

Appendix A
Calibration Criteria Summary

NCBC Gulfport HO

Tables	Title	Page No.
A-1	GC/MS Volatile Organic Compounds, Initial and Continuing Calibration Outlier Summary	Appendix A
A-2	GC/MS Semivolatile Organic Compounds, Initial and Continuing Calibration Outlier Summary	Appendix A

Appendix B
Serial Dilution Summary

NCBC Gulfport HO

Tables	Title	Page No.
B-1	Metals, Water Sample Serial Dilution Summary	Appendix B

Appendix C
Rejected Data Summary

NCBC Gulfport HO

Tables	Title	Page No.
C-1	GC/MS Volatile Organic Compounds, Rejected Data Summary	Appendix C
C-2	Dioxin/Furans, Rejected Data Summary	Appendix C
C-3	GC/MS Semivolatile Organic Compounds, Rejected Data Summary	Appendix C
C-4	Polynuclear Aromatic Hydrocarbons, Rejected Data Summary	Appendix C
C-5	Pesticide/PCBs, Rejected Data Summary	Appendix C
C-6	Organophosphorous Pesticides, Rejected Data Summary	Appendix C
C-7	Herbicides, Rejected Data Summary	Appendix C
C-8	Kepone, Rejected Data Summary	Appendix C
C-9	Total Metals, Rejected Data Summary	Appendix C
C-10	Cyanide, Rejected Data Summary	Appendix C
C-11	Sulfide, Rejected Data Summary	Appendix C

1.0 INTRODUCTION

Prior to evaluating the data for precision, accuracy, representativeness, comparability, and completeness (PARCC) criteria the laboratory reviewed the data package and the data also were independently reviewed and validated using the Naval Energy and Environmental and Support Activity (NEESA) guidance document 20.2-047B (1988) entitled, *Sampling and Chemical Analysis Quality Assurance Requirements for the Navy Installation Program*. Before the laboratory released the chemical analytical results, both the sample and laboratory QC data were carefully reviewed in order to verify sample identity, instrument calibration, detection limits, dilution factors, numerical computations, accuracy of transcriptions, and chemical interpretations. Additionally, the QC data were reduced and spike recoveries were included in control charts, and the resulting data were reviewed to ascertain whether they were within the laboratory defined limits for accuracy and precision. The data were compiled into a NEESA Level D data package and any nonconforming data were discussed in the data package cover letter and case narrative.

The Level D data packages were then reviewed and validated by Heartland Environmental Services, Inc., Missouri (Heartland). Data validation is the technical review of a data package using criteria established in the data quality objectives, the quality assurance project plan and guidance documents prepared by the United States Environmental Protection Agency (USEPA) for the validation of organic and inorganic analytical data (USEPA 1990a and 1990b) as specified by NEESA document 20.2-047B. The data review and validation process is independent of the laboratory's checks because it is impossible to repeat the review conducted by the laboratory.

Samples that did not meet the acceptance limit criteria were qualified with a flag; single letter abbreviations that indicate a problem with the data. Data qualifiers used by the validators when amending the data include the following.

U — Undetected. The analyte was not detected above the contract required quantitation limit (CRQL). The "U" designator also is used to qualify laboratory contaminants. The "U" designator is applied to an environmental sample when the laboratory contaminant is detected in an environmental sample at a concentration less than 5 times (10 X for common contaminants) the value of the concentration detected in any corresponding field QC blank, method blank or preparation blanks.

J — Estimated. The analyte was present, but the reported value may not be accurate or precise. The "J" designator is used to qualify an analyte that was present at a concentration between the CRQL and method detection limit (MDL) or the data "failed" some of the analytical validation criteria but did not require rejections of the data. When combined with the U designator, the quantitation limit is estimated.

R — Rejected. Data was rejected by the data validator during comparison of the NEESA Level D data package with the analytical functional guideline criteria. The "R" designator indicates a significant variance in acceptable laboratory performance. Either re-analysis or re-sampling and analysis would be necessary to determine the presence or absence of the target analyte(s).

Once the data were reviewed and validated according to the guidance presented in NEESA document 20.2-047B, the data were evaluated by Heartland using the PARCCs criteria included in the Data Quality Objectives (DQOs) of the Work Plan for Naval Construction Battalion Center (NCBC) Gulfport, Mississippi, dated October 1993. The following sections present a brief description of PARCCs criteria.

Precision. Precision is a measure of the agreement or repeatability of a set of replicate results obtained from duplicate laboratory analyses of samples collected from the same location/depth interval. Precision was calculated from laboratory analytical data and cannot be measured directly. Precision is expressed as the Relative Percent Difference (RPD) between analytical values for two samples divided by the average of their analytical values. Precision is calculated using the expression:

$$RPD = (D1-D2) / (\tfrac{1}{2}(D1+D2)) \times 100$$

D1 and D2 are the reported values for the duplicate sample pair. Precision was evaluated using field duplicate samples and laboratory split samples (for example, MS/MSD samples).

Precision for environmental samples and their duplicates was assessed using a maximum RPD of 20 Percent for water matrices. Precision for MS/MSD/MD samples was assessed by using the target analyte specific RPD criteria for the spiked compounds and the sample duplicates.

Accuracy. Accuracy is a measure of the agreement between an experimental determination and the true value of the parameter being measured. Accuracy can be calculated from the analytical data and was not measured directly. Accuracy is used to identify the bias in a given measurement system (i.e. laboratory conditions, sample matrix, and sampling conditions). Accuracy is assessed by reviewing the Percent Recovery (%R) between the true value of the spike analyte and the actual analytical value. Accuracy is calculated using the equation:

$$\%R = ((A-B)/C) \times 100$$

A = Measured concentration of the spiked analyte.
B = Measured concentration of the spiked compound in the unspiked sample.
C = True concentration of the spiked analyte.

For the organic analyses, each of the samples was spiked with a surrogate compound; and for inorganic analyses, each chosen matrix spike and matrix duplicate pair was spiked with a known reference material before digestion. The recovery of the internals standards was used to assess accuracy for the Dioxin/Furan fraction. Each of these approaches provides a measure of the matrix effects on the analytical accuracy.

Representativeness. Representativeness is a qualitative measure of the degree to which sample data accurately and precisely represent a characteristic environmental condition. Representativeness is a subjective parameter and is used to evaluate the efficacy of the sampling plan design. Representativeness was evaluated using the field and laboratory QC blank sample results. QC blank samples are equipment rinseate blanks, field blanks, trip blanks, laboratory method blanks for organic analysis and laboratory preparation blanks for inorganic analysis. Positive detection of target analytes in the QC blank samples identify contaminants that possibly were introduced to the associated environmental sample during sample collection, transport or laboratory analysis. Representativeness was also evaluated used the defined extraction and analytical holding time requirements set forth in the Work Plan for NCBC Gulfport or the analytical methodology.

Comparability. Comparability is qualitative measure designed to express the confidence with which one data set may be compared to another. Factors that affect comparability are: sample collection and handling techniques, sample matrix type, and analytical method. Comparability is limited by

the other PARCC parameters because only when precision and accuracy are known can data sets be compared with confidence.

Completeness. Completeness is defined as the percentage of measurements that are judged to be valid compared to the total number of measurements made. Valid usable data are values that were not qualified as rejected (R qualifier) during data validation. A goal of 85 percent usable data was established in the Work Plan for NCBC, Gulfport, Mississippi. Completeness equals the total number of analytes for each matrix minus the total number of rejected analytes divided by the total number of analytes multiplied by 100.

2.0 PRECISION

The following section describes the evaluation of precision for volatile organic compounds, dioxin/furans, semivolatile organic compounds, polynuclear aromatic hydrocarbons, pesticides and polychlorinated biphenyls (PCBs), organophosphorous pesticides, herbicides, metals and cyanide, and the wet chemistry parameter sulfide. Duplicate samples are evaluated for precision only when contaminants are detected in both the environmental sample and the sample's duplicate. A ND in the RPD column of the spreadsheet indicates that a RPD calculation was not required because one result was a non-detect and the other result was less than the compound/analyte CRQL/CRDL. Environmental samples and their respective duplicates may not exhibit positive results for all compounds found at or near the contract required quantitation limit (CRQL) or detection limit (CRDL) because of low levels of contamination found at a site. Duplicates with Relative Percent Differences (RPDs) within control limits indicate adequate sampling practices and/or good analytical precision. Duplicates with RPDs outside the control limits may result from inappropriate sampling procedures, matrix interferences, or non-homogeneity of the sample matrix. In addition, poor precision can be attributed to deviation(s) from the analytical methodology or to poor reproducibility of target analyte concentrations at or near the required quantitation or detection limits (CRQLs or CRDLs). The acceptance criteria for evaluating precision of field duplicates analytical results is a RPD of 20 for water matrices.

The percent of duplicate samples collected for the analytical parameters and sample matrices was greater than ten percent (10%) for the water matrix as specified in the Work Plan for NCBC Gulfport, Mississippi. The following Sections summarize the evaluation of analytical precision for the water matrix for the following analytical groups:

- GC/MS volatile organic compounds (GC/MS VOCs);
- dioxin/furan compounds (D/Fs);
- semivolatile organic compounds (SVOCs);
- polynuclear aromatic hydrocarbons (PAHs);
- pesticides, PCBs,;
- organophosphorous pesticides;
- herbicides; and
- inorganics, cyanide, & sulfide.

Duplicate precision was assessed using both environmental sample and associated duplicates and matrix spike (MS)/matrix spike duplicates (MSDs) pairs for organic fractions, and matrix duplicate pairs (MD pairs) for the metals/cyanide, and sulfide fractions.

Tabulation of the results of assessing duplicate precision and duplicate frequency are presented in Tables 2-1 and 2-2 for the water matrix. The results of the evaluation of precision for MS/MSD samples is provided in Tables 2-3 through 2-11 for the water matrix.

In addition, to assess whether instrument calibration for volatile and semivolatile analytical methods resulted in non-compliant duplicate precision, tables were made of initial and continuing calibration outliers for each sample delivery group (SDG) and are included in Appendix A. Calibration criteria was met in the other organic fractions. Therefore, tables of calibration criteria were not prepared for those fractions. To assess the potential for non-compliance in metals analytical data, caused by physical and/or chemical interferences and indicated by non-compliant serial dilution results, tables were prepared of serial dilution results. These are included in Appendix B.

TABLE 2 - 1

ORGANIC FRACTIONS
WATER SAMPLE AND DUPLICATE PRECISION
NCBC GULFPORT HO

VOLATILES

SDG	SAMPLE ID	MATRIX	NO. ASSC. SAMPLES	COMPOUND	SAMPLE CONC.	DUP CONC	MAX RPD	RPD
27176	GPTHOGW-1	WATER	4	NO COMPOUNDS DETECTED				
	TOTAL SAMPLES		4					

SEMIVOLATILES

SDG	SAMPLE ID	MATRIX	NO. ASSC. SAMPLES	COMPOUND	SAMPLE CONC.	DUP CONC	MAX RPD	RPD
27176	GPTHOGW-1	WATER	4	NO COMPOUNDS DETECTED				
	TOTAL SAMPLES		4					

DIOXIN/FURANS

SDG	SAMPLE ID	MATRIX	NO. ASSC. SAMPLES	COMPOUND	SAMPLE CONC.	DUP CONC	MAX RPD	RPD
27176	GPTHOGW1	WATER	4	TOTAL TCDD	0	24.5	20%	200%
				TOTAL OCDD *	133	215	20%	47%
	TOTAL SAMPLES		4					

* - MPC; MAXIMUM POSSIBLE CONCENTRATION REPORTED IN SAMPLE AND /OR DUPLICATE SAMPLE. REPORTED AS MPC DUE TO THE PRESENCE OF POTENTIAL INTERFERENCES WHICH DO NOT SATISFY IDENTIFICATION CRITERIA (I.E., ION RATIOS).

POLYNUCLEAR AROMATIC HYDROCARBONS

SDG	SAMPLE ID	MATRIX	NO. ASSC. SAMPLES	COMPOUND	SAMPLE CONC.	DUP CONC	MAX RPD	RPD
27176	GPTHOGW1	WATER	4	NO COMPOUNDS DETECTED				
	TOTAL SAMPLES		4					

PESTICIDES/PCBS/KEPONE

SDG	SAMPLE ID	MATRIX	NO. ASSC. SAMPLES	COMPOUND	SAMPLE CONC.	DUP CONC	MAX RPD	RPD
27176	GPTHOGW1	WATER	4	NO COMPOUNDS DETECTED				
	TOTAL SAMPLES		4					

TABLE 2 - 1, CONTINUED

ORGANIC FRACTIONS

WATER SAMPLE AND DUPLICATE PRECISION

NCBC GULFPORT HO

ORGANOPHOSPHOROUS PESTICIDES

SDG	SAMPLE ID	MATRIX	NO. ASSC. SAMPLES	COMPOUND	SAMPLE CONC.	DUP CONC	MAX RPD	RPD
27176	GPTHOGW1	WATER	4	NO COMPOUNDS DETECTED			20%	
	TOTAL SAMPLES		4					

CHLORINATED HERBICIDES

SDG	SAMPLE ID	MATRIX	NO. ASSC. SAMPLES	COMPOUND	SAMPLE CONC.	DUP CONC	MAX RPD	RPD
27176	GPTHOGW1	WATER	4	NO COMPOUNDS DETECTED			20%	
	TOTAL SAMPLES		4					

TABLE 2 - 1, CONTINUED

ORGANIC FRACTIONS
WATER SAMPLE AND DUPLICATE PRECISION
NCBC GULFPORT HO

VOLATILES

% OF DUPLICATES COLLECTED	RPD IN	RPD OUT	% WITHIN RPD LIMIT
25.0%	1	0	100.0%

SEMI VOLATILES

% OF DUPLICATES COLLECTED	RPD IN	RPD OUT	% WITHIN RPD LIMIT
25.0%	1	0	100.0%

DIOXIN/FURANS

% OF DUPLICATES COLLECTED	RPD IN	RPD OUT	% WITHIN RPD LIMIT
25.0%	0	2	0.0%

POLYNUCLEAR AROMATIC HYDROCARBONS

% OF DUPLICATES COLLECTED	RPD IN	RPD OUT	% WITHIN RPD LIMIT
25.0%	1	0	100.0%

PESTICIDES/PCBS

% OF DUPLICATES COLLECTED	RPD IN	RPD OUT	% WITHIN RPD LIMIT
25.0%	1	0	100.0%

ND - INDICATES RPD CALCULATION NOT REQUIRED BECAUSE ONE (1) RESULT IS NON-DETECT AND THE OTHER RESULT IS BELOW THE CRQL.

TABLE 2 - 1, CONTINUED

ORGANIC FRACTIONS
WATER SAMPLE AND DUPLICATE PRECISION
NCBC GULFPORT HO

ORGANOPHOSPHOROUS PESTICIDES

% OF DUPLICATES COLLECTED	RPD IN	RPD OUT	% WITHIN RPD LIMIT
25.0%	1	0	100.0%

CHLORINATED HERBICIDES

% OF DUPLICATES COLLECTED	RPD IN	RPD OUT	% WITHIN RPD LIMIT
25.0%	1	0	100.0%

ND - INDICATES RPD CALCULATION NOT REQUIRED BECAUSE ONE (1) RESULT IS NON-DETECT AND THE OTHER RESULT IS BELOW THE CRQL

2-5

TABLE 2 - 2

INORGANIC FRACTIONS

WATER SAMPLE AND DUPLICATE PRECISION

NCBC GULFPORT HO

METALS

SDG	SAMPLE ID	MATRIX	NO. ASSC. SAMPLES	COMPOUND	SAMPLE CONC.	DUP CONC	MAX RPD	RPD
27176	GPTHOGW-1	WATER	4	ARSENIC	19.2	26.9	20%	33%
				BARIUM	166.0	198.0	20%	18%
				BERYLLIUM	1.2	1.7	20%	34%
				CHROMIUM	26.6	56.3	20%	72%
				COBALT	12.1	22.2	20%	59%
				LEAD	19.8	25.5	20%	25%
				MERCURY	0.1	0	20%	200%
				NICKEL	37	52.5	20%	35%
				SELENIUM	0	0.83	20%	ND
				SILVER	3.4	0	20%	ND
				VANADIUM	49.1	74.7	20%	41%
				ZINC	87.9	93.3	20%	6%
	TOTAL SAMPLES		4					

SULFIDE

SDG	SAMPLE ID	MATRIX	NO. ASSC. SAMPLES	COMPOUND	SAMPLE CONC.	DUP CONC	MAX RPD	RPD
27176	GPTHOGW-1	WATER	4	SULFIDE	1	1.7	20%	52%
	TOTAL SAMPLES		4					

TABLE 2 - 2
INORGANIC FRACTIONS
WATER SAMPLE AND DUPLICATE PRECISION
NCBC GULFPORT HO

METALS

% OF DUPLICATE COLLECTED	RPD IN	RPD OUT	% WITHIN RPD LIMIT
25.0%	4	8	33%

SULFIDE

% OF DUPLICATE COLLECTED	RPD IN	RPD OUT	% WITHIN RPD LIMIT
25.0%	0	1	0.0%

ND - INDICATES RPD CALCULATION NOT REQUIRED BECAUSE ONE (1) RESULT IS NON-DETECT AND THE OTHER RESULT IS BELOW THE CRDL.

TABLE 2 - 3

GC/MS VOLATILE ORGANICS COMPOUNDS
WATER SAMPLE MATRIX SPIKE/MATRIX SPIKE DUPLICATES
NCBC GULFPORT HO

MS = MATRIX SPIKE *SAMPLE GPTHOGW1D*		SDG 27176		
MSD = MATRIX SPIKE DUPLICATE		MS	MSD	
RPD = RELATIVE PERCENT DIFFERENCE		%R	%R	%RPD
VOA COMPOUNDS	UNITS			
1,1-DICHLOROETHENE	ug/L	104	102	2
TRICHLOROETHENE	ug/L	100	94	6
BENZENE	ug/L	992	90	2
TOLUENE	ug/L	98	98	0
CHLOROBENZENE	ug/L	104	102	2

*** DENOTES VALUE NOT WITHIN QA/QC ADVISORY LIMITS**

CORRESPONDING SDG'S AND ASSOCIATED SAMPLES

27176: GPTHOGW-1, GPTHOGW-1D, GPTHOGW-2, GPTHOGW-3, GPTHOGW-4

COMPOUND	ADVISORY LIMITS		RPD
	%R WATER		WATER
1,1-DICHLOROETHENE	61%-145%		14
TRICHLOROETHENE	71%-120%		14
BENZENE	76%-127%		11
TOLUENE	76%-125%		13
CHLOROBENZENE	75%-130%		13

TABLE 2 - 4

DIOXIN/FURAN
WATER SAMPLE MATRIX SPIKE/ DUPLICATES
NCBC GULFPORT HO

MS = MATRIX SPIKE *SAMPLE GPTHOGW-1*		SDG 27176		
MSD = MATRIX SPIKE DUPLICATE		MS	MSD	
RPD = RELATIVE PERCENT DIFFERENCE		%R	%R	RPD
DIOXIN/FURAN CONGENERS	UNITS			
2378-TCDD	ug/L	85.3	80.7	5.5
2378-TCDF	ug/L	118	116	1.7
12378-P5CDD	ug/L	117	132	12.4
12378-P5CDF	ug/L	150	108	32.5
23478-P5CDF	ug/L	104	118	12.1
123478-H6CDD	ug/L	129	163	23.0
123789-H6CDD	ug/L	123	160	25.7
123678-H6CDD	ug/L	113	129	13.2
123478-H6CDF	ug/L	130	154	16.7
123678-H6CDF	ug/L	121	121	0.5
123789-H6CDF	ug/L	127	151	16.8
234678-H6CDF	ug/L	133	111	17.5
1234678-H7CDD	ug/L	152	120	23.7
1234678-H7CDF	ug/L	153	142	7.6
1234789-H7CDF	ug/L	145	114	23.6
OCDD	ug/L	121	122	0.8
OCDF	ug/L	108	108	0.0

*** DENOTES VALUE NOT WITHIN QA/QC ADVISORY LIMITS**

CORRESPONDING SDG'S AND ASSOCIATED SAMPLES

27176: GPTHOGW-1, GPTHOGW-1D, GPTHOGW-2, GPTHOGW-3, GPTHOGW-4

QC LIMITS WERE NOT PROVIDED BY THE LABORATORY.
%R AND RPDS WERE DEEMED IN CONTROL BY THE DATA REVIEWER.

TABLE 2 - 5

SEMIVOLATILE ORGANICS COMPOUNDS
WATER SAMPLE MATRIX SPIKE/MATRIX SPIKE DUPLICATES
NCBC GULFPORT HO

MS = MATRIX SPIKE *SAMPLE GPTHOGW1D*		SDG 27176		
MSD = MATRIX SPIKE DUPLICATE		MS	MSD	
RPD = RELATIVE PERCENT DIFFERENCE		%R	%R	%RPD
SVOA COMPOUNDS	UNITS			
PHENOL	ug/L	* -50	20	* 467
2-CHLOROPHENOL	ug/L	* -58	* 15	*340
1,4-DICHLOROBENZENE	ug/L	96	89	8
N-NITROSO-DI-N-PROP.(1)	ug/L	92	95	-3
1,2,4-TRICHLOROBENZENE	ug/L	* 102	98	4
4-CHLORO-3-METHYLPHENOL	ug/L	* -12	43	* -355
ACENAPHTHENE	ug/L	100	96	4
4-NITROPHENOL	ug/L	* -56	18	* 389
2,4-DINITROTOLUENE	ug/L	67	76	-13
PENTACHLOROPHENOL	ug/L	* -62	16	* 339
PYRENE	ug/L	93	101	-8

*** DENOTES VALUE NOT WITHIN QA/QC ADVISORY LIMITS**

CORRESPONDING SDG'S AND ASSOCIATED SAMPLES

27176: GPTHOGW-1, GPTHOGW-1D, GPTHOGW-2, GPTHOGW-3, GPTHOGW-4

COMPOUND	ADVISORY LIMITS	RPD
	% R WATER	WATER
PHENOL	12%-89%	42
2-CHLOROPHENOL	27%-123%	40
1,4-DICHLOROBENZENE	36%-97%	28
N-NITROSO-DI-N-PROP.(1)	41%-116%	38
1,2,4-TRICHLOROBENZENE	39%-98%	28
4-CHLORO-3-METHYLPHENOL	23%-97%	42
ACENAPHTHENE	46%-118%	31
4-NITROPHENOL	10%-80%	50
2,4-DINITROTOLUENE	24%-96%	38
PENTACHLOROPHENOL	9%-103%	50
PYRENE	26%-127%	31

TABLE 2 - 5, CONTINUED

SEMIVOLATILE ORGANICS COMPOUNDS
WATER SAMPLE MATRIX SPIKE/MATRIX SPIKE DUPLICATES
NCBC GULFPORT HO

MS = MATRIX SPIKE *SAMPLE GPTHOGW1DR*		SDG 27176		
MSD = MATRIX SPIKE DUPLICATE		MS	MSD	
RPD = RELATIVE PERCENT DIFFERENCE		%R	%R	%RPD
SVOA COMPOUNDS	UNITS			
PHENOL	ug/L	60	78	26
2-CHLOROPHENOL	ug/L	62	77	22
1,4-DICHLOROBENZENE	ug/L	95	89	7
N-NITROSO-DI-N-PROP.(1)	ug/L	94	95	1
1,2,4-TRICHLOROBENZENE	ug/L	* 99	98	1
4-CHLORO-3-METHYLPHENOL	ug/L	71	89	22
ACENAPHTHENE	ug/L	93	96	3
4-NITROPHENOL	ug/L	40	73	* 58
2,4-DINITROTOLUENE	ug/L	69	76	10
PENTACHLOROPHENOL	ug/L	56	77	32
PYRENE	ug/L	98	104	6

*** DENOTES VALUE NOT WITHIN QA/QC ADVISORY LIMITS**

CORRESPONDING SDG'S AND ASSOCIATED SAMPLES

27176: GPTHOGW-1DR

COMPOUND	ADVISORY LIMITS	RPD
	% R WATER	WATER
PHENOL	12%-89%	42
2-CHLOROPHENOL	27%-123%	40
1,4-DICHLOROBENZENE	36%-97%	28
N-NITROSO-DI-N-PROP.(1)	41%-116%	38
1,2,4-TRICHLOROBENZENE	39%-98%	28
4-CHLORO-3-METHYLPHENOL	23%-97%	42
ACENAPHTHENE	46%-118%	31
4-NITROPHENOL	10%-80%	50
2,4-DINITROTOLUENE	24%-96%	38
PENTACHLOROPHENOL	9%-103%	50
PYRENE	26%-127%	31

TABLE 2 - 6

POLYNUCLEAR AROMATIC HYDROCARBONS
WATER SAMPLE MATRIX SPIKE/MATRIX SPIKE DUPLICATES
NCBC GULFPORT HO

MS = MATRIX SPIKE *SAMPLE GPTHOGW1DRX*		SDG 27176		
MSD = MATRIX SPIKE DUPLICATE		MS	MSD	
RPD = RELATIVE PERCENT DIFFERENCE		%R	%R	%RPD
PAH COMPOUNDS	UNITS			
NAPTHALENE	ug/L	57	56	1.8
ACENAPHTHYLENE	ug/L	75	75	0.0
ACENAPHTHENE	ug/L	81	79	2.5
FLUORENE	ug/L	83	82	1.2
PHENANTHRENE	ug/L	100	100	0.0
ANTHRACENE	ug/L	73	72	1.4
FLUORANTHENE	ug/L	92	90	2.2
PYRENE	ug/L	98	95	3.1
BENZO(A)ANTHRACENE	ug/L	94	90	4.3
CHRYSENE	ug/L	92	92	0
BENZO(B)FLUORANTHENE	ug/L	96	93	3.2
BENZO(K)FLUORANTHENE	ug/L	92	88	4.4
BENZO(A)PYRENE	ug/L	94	91	3.2
DIBENZO(A,H)ANTHRACENE	ug/L	100	100	0
INDENO(1,2,3-CD)PYRENE	ug/L	120	110	8.7
BENZO(G,H,I)PERYLENE	ug/L	91	88	3.4

*** DENOTES VALUE NOT WITHIN QA/QC ADVISORY LIMITS**

CORRESPONDING SDG AND ASSOCIATED SAMPLES

27176: GPTHOGW-1RX, GPTHOGW-1DRX, GPTHOGW-2RX, GPTHOGW-3RX, GPTHOGW-4RX

QC LIMITS WERE NOT PROVIDED BY THE LABORATORY.
RECOVERIES AND RPDS WERE DEEMED IN CONTROL BY THE DATA VALIDATOR.

TABLE 2 - 7

PESTICIDES/PCBS
WATER SAMPLE MATRIX SPIKE/MATRIX SPIKE DUPLICATES
NCBC GULFPORT HO

MS = MATRIX SPIKE *SAMPLE GPTHOGW1D*		SDG 27176		
MSD = MATRIX SPIKE DUPLICATE		MS	MSD	
RPD = RELATIVE PERCENT DIFFERENCE		%R	%R	%RPD
PEST COMPOUNDS	UNITS			
gamma-BHC (Lindane)	ug/L	80	83	4
Heptachlor	ug/L	78	80	3
Aldrin	ug/L	78	81	4
Dieldrin	ug/L	90	92	2
Endrin	ug/L	94	96	2
4,4'-DDT	ug/L	79	78	1

*** DENOTES VALUE NOT WITHIN QA/QC ADVISORY LIMITS**

CORRESPONDING SDG AND ASSOCIATED SAMPLES

27176: GPTHOGW-1, GPTHOGW-1D, GPTHOGW-2, GPTHOGW-3, GPTHOGW-4

COMPOUND	ADVISORY LIMITS		RPD
	% R WATER		WATER
gamma-BHC(Lindane)	56%-123%		15
HEPTACHLOR	40%-131%		20
ALDRIN	40%-120%		22
DIELDRIN	52%-126%		18
ENDRIN	56%-121%		21
4,4'-DDT	38%-127%		27

TABLE 2 - 8

ORGANOPHOSPHOROUS PESTICIDES
WATER SAMPLE MATRIX SPIKE.MATRIX SPIKE DUPLICATES
NCBC GULFPORT HO

MS = MATRIX SPIKE *SAMPLE GPTHOGW1D*		SDG 27176		
MSD = MATRIX SPIKE DUPLICATE		MS	MSD	
RPD = RELATIVE PERCENT DIFFERENCE		%R	%R	%RPD
OPP COMPOUNDS	UNITS			
PHORATE	ug/L	72	69	4
DISULFOTON	ug/L	68	62	8
METHYL PARATHION	ug/L	83	75	9
ETHYL PARATHION	ug/L	79	71	10

*** DENOTES VALUE NOT WITHIN QA/QC ADVISORY LIMITS**

CORRESPONDING SDG AND ASSOCIATED SAMPLES

27176: GPTHOGW-1, GPTHOGW-1D, GPTHOGW-2, GPTHOGW-3, GPTHOGW-4

NO QC LIMITS WERE REPORTED BY THE LABORATORY.
RECOVERIES WERE DEEMED IN CONTROL BY THE DATA VALIDATOR.

TABLE 2 - 9

HERBICIDES

WATER SAMPLE MATRIX SPIKE.MATRIX SPIKE DUPLICATES

NCBC GULFPORT HO

MS = MATRIX SPIKE *SAMPLE GPTHOGW1D*		SDG 27176		
MSD = MATRIX SPIKE DUPLICATE		MS	MSD	
RPD = RELATIVE PERCENT DIFFERENCE		%R	%R	%RPD
HERB COMPOUNDS	UNITS			
2,4-D	ug/L	98	82	17
SILVEX	ug/L	91	80	13
2,4,5-T	ug/L	91	80	14
DINOSEB	ug/L	46	34	31

*** DENOTES VALUE NOT WITHIN QA/QC ADVISORY LIMITS**

CORRESPONDING SDG AND ASSOCIATED SAMPLES

27176: GPTHOGW-1, GPTHOGW-1D, GPTHOGW-2, GPTHOGW-3, GPTHOGW-4

NO QC LIMITS WERE REPORTED BY THE LABORATORY.
RECOVERIES AND RPDS WERE DEEMED IN CONTROL BY DATA VALIDATOR.

TABLE 2 - 10

METALS AND CYANIDE
WATER SAMPLE MATRIX SPIKE/ DUPLICATES
NCBC GULFPORT HO

MS = MATRIX SPIKE *SAMPLE GPTHOGW-1*		SDG 27176	
MD = MATRIX DUPLICATE *SAMPLE GPTHOGW-1*		MS	MD
RPD = RELATIVE PERCENT DIFFERENCE		%R	RPD
METALS COMPOUNDS	UNITS		
ALUMINUM	ug/L	NA	NA
ANTIMONY	ug/L	82.2	NC
ARSENIC	ug/L	* 67.1	* 34.9
BARIUM	ug/L	102	5.5
BERYLLIUM	ug/L	95.9	13.6
CADMIUM	ug/L	96.5	NC
CALCIUM	ug/L	NA	NA
CHROMIUM	ug/L	111	19.5
COBALT	ug/L	102	1.8
COPPER	ug/L	104	0.0
IRON	ug/L	NA	NA
LEAD	ug/L	* 25.0	* 23.7
MAGNESIUM	ug/L	NA	NA
MANGANESE	ug/L	NA	NA
MERCURY	ug/L	89	200
NICKEL	ug/L	102	4.9
POTASSIUM	ug/L	NA	NA
SELENIUM	ug/L	* 52.8	47.0
SILVER	ug/L	103	200
SODIUM	ug/L	NR	NA
THALLIUM	ug/L	* 66.3	NC
VANADIUM	ug/L	107	11.0
ZINC	ug/L	108	3.2
CYANIDE	ug/L	* 63.2	NC
TIN	ug/L	97.1	NC

*** DENOTES VALUE NOT WITHIN QA/QC ADVISORY LIMITS**

NC DENOTES THAT BOTH SAMPLES ARE NON-DETECT AND A RPD CANNOT BE CALCULATED.
NR DENOTES THAT A MATRIX SPIKE RECOVERY CALCULATION IS NOT REQUIRED.

CORRESPONDING SDG'S AND ASSOCIATED SAMPLES

27176: GPTHOGW-1, GPTHOGW-1D, GPTHOGW-2, GPTHOGW-3, GPTHOGW-4

COMPOUND	ADVISORY LIMITS		RPD
	%R WATER		WATER
ALL COMPOUNDS	75%-125%		+/-20 OR +/-CRDL

+/- CRDL = RPD Limits applicable only on values 5 times the Contract Required Detection Limit (CRDL)

TABLE 2 - 11

SULFIDE
WATER SAMPLE MATRIX SPIKE/ DUPLICATES
NCBC GULFPORT HO

MS = MATRIX SPIKE *SAMPLE GPTHOGW-1D*		SDG 27176	
MD = MATRIX DUPLICATE *SAMPLE GPTHOGW-1D*		MS	MD
RPD = RELATIVE PERCENT DIFFERENCE		%R	RPD
	UNITS		
SULFIDE	ug/L	91.3	* 83.3

*** DENOTES VALUE NOT WITHIN QA/QC ADVISORY LIMITS**

NC DENOTES THAT BOTH SAMPLES ARE NON-DETECT AND A RPD CANNOT BE CALCULATED.

CORRESPONDING SDG'S AND ASSOCIATED SAMPLES

27176: GPTHOGW-1, GPTHOGW-1D, GPTHOGW-2, GPTHOGW-3, GPTHOGW-4

COMPOUND	ADVISORY LIMITS		RPD
	%R WATER		WATER
ALL COMPOUNDS	80%-120%		+/-20

2.1 Water Matrix

No target compounds requiring RPD calculation were detected in either the water samples or associated duplicates for the volatiles, semivolatiles, polynuclear aromatic hydrocarbons, pesticides/PCB/kepone, organophosphorous pesticides, and herbicides (Table 2-1). Therefore, no precision assessment was conducted for those parameters.

The dioxin/furan analysis of the field duplicate pair of sample GPTHOGW1 exhibited a non-compliant RPD for the two (2) congeners detected (Table 2-1). The non-compliant congeners were total TCDD, and total OCDD. A total TCDD concentration was detected in the field duplicate sample, but was not detected in the original sample. The TCDD result is biased high due to laboratory contamination. The contamination was due to the presence of trace amounts of the 1,2,3,4-TCDD marker compound, previously used by the laboratory, that remain in the system. All total TCDD results in the samples can be attributed to this contamination since there were no positive results in the samples for 2,3,7,8-TCDD. The non-compliance for total TCDD can be attributed to laboratory contamination. The congener total OCDD was detected as a MPC in the field duplicate sample. A MPC (maximum possible concentration) value is reported when not all identification criteria; i.e. ion ratios, is satisfied. The concentration may be less than the reported concentration, but not higher. The non-compliance for the congener total OCDD may be attributed to laboratory inconsistencies.

Eight (8) of the twelve (12) target analytes detected in the metals analysis of the field duplicate pair of sample GPTHOGW-1 exhibited non-compliant RPDs (Table 2-2). The target analytes with non-compliant RPDs were arsenic, beryllium, chromium, cobalt, lead, mercury, nickel, and vanadium. The non-compliance for the analytes beryllium, cobalt, nickel, and vanadium can be attributed to the low concentrations detected. Results were less than the CRDL in both of the samples. The analyte lead was also non-compliant for matrix spike and matrix duplicate criteria. This could be indicative of a matrix interference. The non-compliance for lead may be attributed to field inconsistencies. The analyte mercury was detected in the original sample at a concentration above the CRDL of 0.08 ug/L at 0.1 ug/L. The analyte was not detected in the field duplicate sample. The non-compliance for mercury could be attributed to the low concentration detected. The non-compliance for the analytes chromium and arsenic may be attributed to laboratory and/or field inconsistencies. Assessment of the non-compliant analytes for serial dilution criteria indicates that they were in-control (Appendix B).

The field duplicate pair of sample GPTHOGW-1 analyzed for sulfide exhibited a non-compliant RPD value (Table 2-2). Sulfide was detected in the DI field blank associated with the field duplicate pair (Table 4-11). Although the analytical data did not require qualification due to the field blank result, the contamination could affect precision results. The non-compliance for sulfide can be attributed to field contamination.

The evaluation of precision of the water matrix for the MS/MSD samples is provided in Tables 2-3 through 2-11. All MS/MSD sample pairs analyzed for volatiles, dioxin/furans, polynuclear aromatic hydrocarbons, pesticides/PCBs, organophosphorous pesticides and herbicides exhibited acceptable RPDs between spike compounds (Tables 2-3, 2-4, 2-6, 2-7, 2-8, and 2-9).

The semivolatile analysis of the MS/MSD pair of sample GPTHPGW1D exhibited non-compliant RPDs for five (5) of the eleven (11) spike compounds (Table 2-5, page 2-10). The non-compliance resulted from the negative recoveries of the compounds in the MS sample. The sample and the MS/MSD were reanalyzed and exhibited only one non-compliant RPD (Table 2-5, page 2-11). The analytical data did not require qualification.

The target analytes arsenic and lead exhibited non-compliant RPDs between the MD pair analyzed of sample GPTHOGW-1. All positive and non-detect results for arsenic in all field samples were appropriately qualified as estimated, J/UJ. The non-compliance for lead was less than 35%, so the analytical results did not require qualification.

The MD pair analyzed for sulfide exhibited a non-compliant RPD value (Table 2-11). However, based on the assessment of additional QC criteria, the analytical data did not require qualification.

Based on assessment of duplicate precision evaluation criteria, the water matrix analytical data was acceptable for each SDG with the noted potential for bias in the metals analytes arsenic and lead.

3.0 ACCURACY

The assessment of accuracy is evaluated by comparison of the percent recovery (%R) computed from the known concentration of analyte spikes and their recovered concentration versus the analytical method acceptance criteria. Spike recoveries provide an indication of bias, where the reported data may either overestimate or underestimate the actual concentration of detected compounds and/or the detection limits. Recoveries outside acceptable criteria may be caused by factors such as matrix interference, poor analytical precision, or instrument calibration.

The following Sections summarize the evaluation of analytical accuracy for the water matrix for the following analytical groups:

- GC/MS volatile organic compounds (GC/MS VOCs);
- dioxin/furan compounds (D/Fs);
- semivolatile organic compounds (SVOCs);
- polynuclear aromatic hydrocarbons (PAHs);
- pesticides, PCBs,;
- organophosphorous pesticides;
- herbicides; and
- inorganics, cyanide, & sulfide.

Accuracy was assessed using MS and MSD samples for organic analyses and MS samples for inorganic analyses for each matrix, as well as surrogate compound recoveries for those analytical fraction which utilize them. Accuracy for the dioxin/furan fraction was assessed using the recovery of internal standards. The results of the evaluation of accuracy for the MS/MSD samples is provided in Tables 2-3 through 2-11 for water matrix. The results of the evaluation of accuracy for the surrogates in the samples are provided in Table 3-1 through 3-8 for the water matrix.

3.1 Water Matrix

All MS/MSD sample pairs analyzed for volatiles, dioxin/furans, polynuclear aromatic hydrocarbons, pesticides/PCBs, organophosphorous pesticides, herbicides, and sulfide exhibited acceptable recoveries of spike compounds (Tables 2-3, 2-4, 2-6, 2-7, 2-8, 2-9, and 2-11).

The surrogate recoveries for volatiles, polynuclear aromatic hydrocarbons, pesticide/PCBs, kepone, and herbicides were acceptable (Tables 3-1, 3-4, 3-5, 3-6, 3-7, and 3-8).

The internal standard (IS) recoveries for the dioxin/furan fraction were acceptable with the exception of one (1) IS in three (3) samples and two (2) IS in one (1) sample. The reported result for 1,2,3,7,8-PeCDF in sample GPTHOGW-2 was appropriately qualified as estimated, J/UJ, and should be considered potentially underestimated. The reported result for 2,3,4,7,8-PeCDF in sample GPTHOGW1D was appropriately qualified as estimated, J/UJ, and should be considered potentially underestimated. The reported result for 1,2,3,7,8-PeCDD in samples GPTHOGW1D and GPTHOGW-4 were appropriately qualified as estimated, J/UJ, and should be considered potentially underestimated.

The MS/MSD of sample GPTHOGW1D analyzed for semivolatile organics had non-compliant %Rs for six (6) of the eleven (11) spike compounds (Table 2-5, page 2-10). The non-compliant recoveries were due to an error by the laboratory. The MS/MSD pair was re-extracted and reanalyzed and exhibited one (1) compound, 1,2,4-trichlorobenzene, with a non-compliant %R (Table 2-5, page 2-11). Based on the assessment of additional QC criteria the analytical data did not require qualification.

TABLE 3 - 1

SURROGATE % RECOVERIES
GC/MS VOLATILE WATER SAMPLES
NCBC GULFPORT HO

SDG	SAMPLE ID	SMC1	SMC2	SMC3	TOTAL OUT
27176	BS-01-TB	103	90	87	0
	BS-01-DI	103	90	91	0
	BS-01-PI	90	91	89	0
	BS-01-RI	104	92	91	0
	GPTHOGW-1	103	90	92	0
	GPTHOGW1D	104	92	92	0
	GPTHOGW-2	105	90	94	0
	GPTHOGW-3	102	91	92	0
	GPTHOGW-4	103	89	96	0
	GPTHOGW1DMS	104	91	92	0
	GPTHOGW1DMSD	104	87	94	0

SMC1 = TOLUENE-D8 QC LIMITS 88% - 110%
SMC2 = BROMOFLUOROBENZENE QC LIMITS 86% - 115%
SMC3 = 1,2-DICHLOROETHANE-D4 QC LIMITS 76% - 114%

# SAMPLES	% REC IN	%REC OUT	% TOTAL IN
11	33	0	100.0%

3-2

MS_SiteA.TM1
mlv.11.94

TABLE 3 - 2

WATER SAMPLE INTERNAL STANDARDS % RECOVERIES
DIOXIN/FURAN
NCBC GULFPORT HO

	BS-01-DI	BS-01-PI	BS-01-RI	BS-01-RIRE	GPTHOGW-1	GPTHOGW-1MS	GPTHOGW-1MD	GPTHOGW-1D	GPTHOGW-2	GPTHOGW-3	GPTHOGW-4
I.S. COMPOUND											
13C-2378-TCDD	69.5	63.6	64.9	63.7	74.6	61.7	90.5	54.8	42.7	71.6	66.8
13C-2378-TCDF	44	49.6	59.6	53.3	54.7	44.8	67.5	42.6	54.3	48.8	52.6
13C-12378-PeCDD	45.5	44.5	49.3	58.5	45.3	44.8	57.6	38.0 *	47.1	48	38.7 *
13C-12378-PeCDF	51.5	47.8	55.2	48.8	45.7	33.7	76.7	40.9	36.7 *	43.3	53.5
13C-23478-PeCDF	58.6	54.6	68.2	43.4	50.3	52.4	71.5	39.8 *	51.3	47.9	53
13C-123478-HxCDD	63.3	91.2	70.5	73.3	62.4	63.4	50.4	61	53	68.8	87.9
13C-123678-HxCDD	103	109	126	64.7	102	81.6	72.6	73.6	78.4	98.1	109
13C-123478-HxCDF	84.4	106	100	61.2	62.7	63.5	61.6	61.3	82.3	82	75.3
13C-123678-HxCDF	105	** 140	131	59.1	109	86.1	106	84.2	139	90.5	112
13C-234678-HxCDF	100	122	119	58.5	87	73.3	66.5	79.4	75.2	97.4	95.7
13C-123789-HXCDF	91.2	111	85.8	60.1	81.7	71.4	94.4	54	83.1	69.1	96.3
13C-1234678-HpCDD	83.6	74.5	72.1	68.2	62.3	59.8	83.9	63.8	92.3	85.2	86.2
13C-1234678-HpCDF	73.5	100	89.8	58.3	57.3	68.5	83.8	68	92.7	73.2	84.5
13C-1234789-HpCDF	79.7	93.5	82.1	64.5	60.4	68.2	95.4	55.4	67.9	72.3	83.7
13C-OCDD	90.5	95.1	67	79.3	77.6	81.7	81.3	56.4	71.9	74.4	85.5
TOTAL OUT	0	1	0	0	0	0	0	2	1	0	1

QC LIMITS: 40% - 120%
* - VALUE OUTSIDE OF QC LIMITS

# SAMPLE	% REC IN	% REC OUT	% TOTAL IN
11	160	5	97.0%

TABLE 3 - 3

SURROGATE % RECOVERIES
SEMIVOLATILE WATER SAMPLES
NCBC GULFPORT HO

SDG	SAMPLE ID	S1	S2	S3	S4	S5	S6	TOTAL OUT
27176	BS-01-DI	99	97	119	82	79	92	0
	BS-01-PI	97	102	114	*6	*19	46	2
	BS-01-PIRE	78	81	92	*4	31	52	1
	BS-01-RI	97	101	118	83	78	84	0
	GPTHOGW-2	91	100	103	79	73	90	0
	GPTHOGW-3	63	89	60	83	78	92	0
	GPTHOGW-4	83	88	86	77	70	95	0
	GPTHOGW1	95	95	106	82	72	88	0
	GPTHOGW1D	96	99	97	73	61	75	0
	GPTHOGW1DR	79	83	80	80	72	82	0
	GPTHOGW1DMS	99	102	81	74	69	84	0
	GPTHOGW1DMSD	100	100	96	81	72	82	0
	GPTHOGW1DMSR	83	91	71	62	55	64	0

S1 = NITROBENZENE-D5 QC LIMITS = 35% - 114%
S2 = 2-FLUOROBIPHENYL QC LIMITS = 43% - 116%
S3 = TERPHENYL-D14 QC LIMITS = 33% - 141%
S4 = PHENOL D-5 QC LIMITS = 10% - 94%
S5 = 2-FLUOROPHENOL QC LIMITS = 21% - 110%
S6 = 2,4,6-TRIBROMOPHENOL QC LIMITS = 10% - 123%

# SAMPLES	% REC IN	%REC OUT	% TOTAL IN
13	75	3	96.2%

TABLE 3 - 4

SURROGATE % RECOVERIES
POLYNUCLEAR AROMATIC HYDROCARBONS WATER SAMPLES
NCBC GULFPORT HO

SDG	SAMPLE ID	TD-14	TOTAL OUT
27176	BS-01-DI	NA	0
	BS-01-DIRE	86	0
	BS-01-PI	NA	0
	BS-01-PIRE	101	0
	BS-01-RI	NA	0
	BS-01-RIRE	83	0
	GPTHOGW-2	NA	0
	GPTHOGW-2RE	93	0
	GPTHOGW-3	NA	0
	GPTHOGW-3RE	96	0
	GPTHOGW-4	NA	0
	GPTHOGW-4RE	103	0
	GPTHOGW1	NA	0
	GPTHOGW1RE	102	0
	GPTHOGW1D	NA	0
	GPTHOGW1DRE	100	0
	GPTHOGW1DMS	NA	0
	GPTHOGW1DRX1	105	0
	GPTHOGW1DMSD	NA	0
	GPTHOGW1DRX2	102	0

TERPHENYL-d14 QC LIMITS NOT PROVIDED

NA - INDICATES SURROGATE COMPOUND NOT SPIKED
RECOVERIES DEEMED IN-CONTROL BY DATA VALIDATOR

# SAMPLE	% REC IN	%REC OUT	% TOTAL IN
20	15	0	100.0%

TABLE 3 - 5

SURROGATE % RECOVERIES
PESTICIDES/PCB WATER SAMPLES
NCBC GULFPORT HO

SDG	SAMPLE ID	DCB	TOTAL OUT
27176	BS-01-DI	75	0
	BS-01-PI	50	0
	BS-01-RI	85	0
	GPTHOGW-1	41	0
	GPTHOGW1D	33	0
	GPTHOGW-2	45	0
	GPTHOGW-3	44	0
	GPTHOGW-4	43	0
	GPTHOGW1DMS	44	0
	GPTHOGW1DMSD	43	0

DCB = DECACHLOROBIPHENYL QC LIMITS = 17% - 123%

# SAMPLES	% REC IN	%REC OUT	% TOTAL IN
10	10	0	100.0%

3 - 6

TABLE 3 - 6

SURROGATE % RECOVERIES
KEPONE WATER SAMPLES
NCBC GULFPORT HO

SDG	SAMPLE ID	DCB	TOTAL OUT
27176	BS-01-DI	96	0
	BS-01-PI	69	0
	BS-01-RI	110	0
	GPTHOGW-1	49	0
	GPTHOGW1D	42	0
	GPTHOGW-2	54	0
	GPTHOGW-3	57	0
	GPTHOGW-4	50	0

DCB = DECACHLOROBIPHENYL QC LIMITS = 14% - 132%

# SAMPLES	% REC IN	%REC OUT	% TOTAL IN
8	8	0	100.0%

3 - 7

TABLE 3 - 7

SURROGATE % RECOVERIES
ORGANOPHOSPHOROUS PESTICIDES WATER SAMPLES
NCBC GULFPORT HO

SDG	SAMPLE ID	ASPON	TOTAL OUT
27176	BS-01-DI	55	0
	BS-01-PI	22 *	1
	BS-01-PIRE	47	0
	BS-01-RI	69	0
	GPTHOGW-1	50	0
	GPTHOGW1D	64	0
	GPTHOGW-2	66	0
	GPTHOGW-3	45	0
	GPTHOGW-4	82	0
	GPTHOGW1DMS	65	0
	GPTHOGW1DMSD	62	0

ASPON QC LIMITS = 38% - 131%

# SAMPLES	% REC IN	%REC OUT	% TOTAL IN
11	10	1	90.9%

3 - 8

TABLE 3 - 8

SURROGATE % RECOVERIES
CHLORINATED HERBICIDES WATER SAMPLES
NCBC GULFPORT

SDG	SAMPLE ID	DCBA	TOTAL OUT
27176	BS-01-DI	88	0
	BS-01-PI	88	0
	BS-01-RI	85	0
	GPTHOGW-1	81	0
	GPTHOGW1D	70	0
	GPTHOGW-2	83	0
	GPTHOGW-3	71	0
	GPTHOGW-4	89	0
	GPTHOGW1DMS	77	0
	GPTHOGW1DMSD	69	0

DCBA - 3,5-DICHLOROBENZOIC ACID QC LIMITS = 25% - 127%

# SAMPLES	% REC IN	%REC OUT	% TOTAL IN
10	10	0	100.0%

3 - 9

Two (2) semivolatile samples exhibited acid surrogate recoveries which were outside the minimum acceptable criteria for accuracy (Table 3-3). The surrogate compound phenol-d_5 was recovered less than 10% in samples BS-01-PI and BS-01-PIRE. The surrogate compound 2-fluorophenol was recovered less than 10% in sample BS-01-PI. This indicates that positive results for the acid fraction in these two (2) samples may be underestimated and that non-detect results are unreliable. All positive results for acid fraction compounds in samples BS-01-PI and BS-01-PIRE were appropriately qualified as estimated, J, and non-detect results for acid fraction compounds were rejected, R. This constituted a rejection of thirteen (13) data points in the QC blank sample.

The organophosphorous pesticide surrogate recovery for one (1) field QC sample, BS-01-PI, was below the acceptable minimum criteria for accuracy (Table 3-7). This indicates that reported positive and non-detect results for target compounds in the sample may be underestimated. The reported results in sample BS-01-PI were appropriately qualified as estimated, J/UJ.

The MS/MD analyzed for inorganic analytes exhibited five (5) compounds with non-compliant %Rs (Table 2-10). The non-compliant target analytes were arsenic, lead, selenium, thallium, and cyanide the MS sample GPTHOGW-1. The %Rs for all non-compliant analytes were below the minimum criteria for accuracy, which indicates that the quantified values for these analytes may be underestimated. Positive and non-detect results for arsenic, selenium, thallium and cyanide were appropriately qualified as estimated, J/UJ. The %R for lead was less than 30%. This indicates that positive results for lead in associated samples are underestimated, and non-detect results are unreliable. The positive results for lead in the samples in SDG 27176 were qualified as estimated, J, and the non-detect results for lead were rejected, R. This constituted a rejection of three (3) data points in QC blank samples. The completion goal for the metals fraction was still met.

Based on assessment of MS/MSD and surrogate sample accuracy evaluation criteria, the water matrix analytical data was acceptable for each SDG with the exception of the semivolatile fraction and the metals fraction. Some of the analytical results may be overestimated or underestimated. For the semivolatile fraction, thirteen (13) data points in a field QC blank were rejected, R, due to surrogate %R below 10%. For the metals fraction, three (3) data points for lead in the QC blanks were rejected due to MS %R less than 30%.

4.0 REPRESENTATIVENESS

Representativeness of the environmental sample analytical data was assessed using trip blanks, field blanks, equipment rinseate blanks, and laboratory method blanks. The environmental samples and associated blanks were analyzed for the following target analyte groups:

- GC/MS volatile organic compounds (GC/MS VOCs);
- dioxin/furan compounds (D/Fs);
- semivolatile organic compounds (SVOCs);
- polynuclear aromatic hydrocarbons (PAHs);
- pesticides, PCBs,;
- organophosphorous pesticides;
- herbicides; and
- inorganics, cyanide, & sulfide.

The trip blank samples were analyzed for only GC/MS volatile organic target analytes. Field blanks, equipment rinseate blanks, and laboratory method blanks were analyzed for target analytes in each listed category. The assessment of representativeness is summarized in tabular form for each type of blank, trip blank results are summarized in Table 4-1, field blank results are summarized in Tables 4-2 through 4-11, equipment rinseate blank results are summarized in Tables 4-12 through 4-21 and method blank results are summarized in Tables 4-22 through 4-30.

If contaminants were detected in a blank, corrective actions were made for the chemical analytical data during data validation by Heartland. The corrective action consisted of amending the laboratory reported results for organic and inorganic target analytes by the criteria. The following describes the Validation Qualifier code in the blank summary tables.

Organic Target Analytes

- CRDL Validation Qualifier. If a sample result for the blank contaminant was less than the CRQL and less than 5 times the blank value (10 times for common laboratory contaminants), the sample result was rejected and amended as estimated non-detected at the CRQL for the target compound.

- U Validation Qualifier. If a sample result for the blank contaminant was greater than the sample CRQL and less than 5 times the blank value (10 times for common laboratory contaminants), the sample result for the blank contaminant was amended as non detect at the concentration reported in the sample results.

- No Action (NA). If a sample result for the blank contaminant was greater than the CRQL and 5 time the blank value (10 times for common laboratory contaminants), the result was not amended.

Inorganic Target Analytes

- U Validation Qualifier. If a sample result for the blank contaminant was less than the IDL and less than 5 times the blank value, the sample result was amended as non-detected.

- UJ Validation Qualifier. If a sample result for the blank contaminant was less than the sample IDL when the absolute value of the negative blank value was greater

TABLE 4 - 1

GC/MS VOLATILE COMPOUNDS DETECTED IN TRIP BLANKS
NCBC GULFPORT HO

SDG NUMBER	BLANK ID	RELATED ENVIRONMENTAL SAMPLES	CONTAMINANT	TB CONC.	UNITS	VALIDATION QUALIFIER
27176	BS-01-TB	GPTHOGW-1, GPTHOGW-4	ACETONE	8	ug/L	CRQL
		GPTHOGW-3	ACETONE	8	ug/L	U
		GPTHOGW-2, GPTHOGW1D	ACETONE	8	ug/L	

TABLE 4 - 2

GC/MS VOLATILES DETECTED IN FIELD BLANKS
NCBC GULFPORT HO

SDG NUMBER	BLANK ID	RELATED ENVIRONMENTAL SAMPLES	CONTAMINANT	FB CONC.	UNITS	VALIDATION QUALIFIER
27176	BS01DI	GPTHOGW-1, GPTHOGW-1D, GPTHOGW-2, GPTHOGW-3, GPTHOGW-4	ACETONE	38	ug/L	
	BS01PI	GPTHOGW-1, GPTHOGW-1D, GPTHOGW-2, GPTHOGW-3, GPTHOGW-4	CHLOROFORM	1	ug/L	
		GPTHOGW-1, GPTHOGW-1D, GPTHOGW-2, GPTHOGW-3, GPTHOGW-4	ACETONE	7	ug/L	

TABLE 4 - 3

DIOXIN/FURANS DETECTED IN FIELD BLANKS
NCBC GULFPORT HO

SDG NUMBER	BLANK ID	RELATED ENVIRONMENTAL SAMPLES	CONTAMINANT	FB CONC.	UNITS	VALIDATION QUALIFIER
27176	BS01DI	GPTHOGW-1, GPTHOGW-1D, GPTHOGW-2, GPTHOGW-3, GPTHOGW-4	TOTAL TCDD	15.4	pg/L	
	BS01PI	GPTHOGW-1, GPTHOGW-1D, GPTHOGW-2, GPTHOGW-3, GPTHOGW-4	1,2,3,7,8,9-HxCDF *	2.43	pg/L	
		GPTHOGW-1, GPTHOGW-1D, GPTHOGW-2, GPTHOGW-3, GPTHOGW-4	TOTAL TCDD	8.38	pg/L	
		GPTHOGW-1, GPTHOGW-1D, GPTHOGW-2, GPTHOGW-3, GPTHOGW-4	TOTAL HxCDF *	2.43	pg/L	

TABLE 4 - 4

SEMIVOLATILES DETECTED IN FIELD BLANKS
NCBC GULFPORT HO

SDG NUMBER	BLANK ID	RELATED ENVIRONMENTAL SAMPLES	CONTAMINANT	FB CONC.	UNITS	VALIDATION QUALIFIER
27176	BS01DI	GPTHOGW-1, GPTHOGW-1D, GPTHOGW-2, GPTHOGW-3, GPTHOGW-4	NO CONTAMINATION FOUND			
	BS01PI	GPTHOGW1D, GPTHOGW1DR, GPTHOGW1DM GPTHOGW1DMSR	N-NITROSODIPHENYLAMINE	2	ug/L	CRQL
		GPTHOGW-1, GPTHOGW-2, GPTHOGW-3, GPTHOGW-4	N-NITROSODIPHENYLAMINE	2	ug/L	

TABLE 4 - 5

POLYNUCLEAR AROMATIC HYDROCARBONS DETECTED IN FIELD BLANKS
NCBC GULFPORT HO

SDG NUMBER	BLANK ID	RELATED ENVIRONMENTAL SAMPLES	CONTAMINANT	FB CONC.	UNITS	VALIDATION QUALIFIER
27176	BS01DI	GPTHOGW-1, GPTHOGW-1D, GPTHOGW-2, GPTHOGW-3, GPTHOGW-4	NO CONTAMINATION FOUND			
	BS01PI	GPTHOGW-1, GPTHOGW1D, GPTHOGW-2, GPTHOGW-3, GPTHOGW-4	NO CONTAMINATION FOUND			

4 - 6

TABLE 4 - 6

PESTICIDES/PCBS DETECTED IN FIELD BLANKS
NCBC GULFPORT HO

SDG NUMBER	BLANK ID	RELATED ENVIRONMENTAL SAMPLES	CONTAMINANT	FB CONC.	UNITS	VALIDATION QUALIFIER
27176	BS01DI	GPTHOGW-1, GPTHOGW-1D, GPTHOGW-2, GPTHOGW-3, GPTHOGW-4	NO CONTAMINATION FOUND			
	BS01PI	GPTHOGW-1, GPTHOGW1D, GPTHOGW-2, GPTHOGW-3, GPTHOGW-4	NO CONTAMINATION FOUND			

TABLE 4 - 7

KEPONE DETECTED IN FIELD BLANKS
NCBC GULFPORT HO

SDG NUMBER	BLANK ID	RELATED ENVIRONMENTAL SAMPLES	CONTAMINANT	FB CONC.	UNITS	VALIDATION QUALIFIER
27176	BS01DI	GPTHOGW-1, GPTHOGW-1D, GPTHOGW-2, GPTHOGW-3, GPTHOGW-4	NO CONTAMINATION FOUND			
	BS01PI	GPTHOGW-1, GPTHOGW1D, GPTHOGW-2, GPTHOGW-3, GPTHOGW-4	NO CONTAMINATION FOUND			

4 - 8

TABLE 4 - 8

ORGANOPHOSPHOROUS PESTICIDES DETECTED IN FIELD BLANKS
NCBC GULFPORT HO

SDG NUMBER	BLANK ID	RELATED ENVIRONMENTAL SAMPLES	CONTAMINANT	FB CONC.	UNITS	VALIDATION QUALIFIER
27176	BS01DI	GPTHOGW-1, GPTHOGW-1D, GPTHOGW-2, GPTHOGW-3, GPTHOGW-4	NO CONTAMINATION FOUND			
	BS01PI	GPTHOGW-1, GPTHOGW1D, GPTHOGW-2, GPTHOGW-3, GPTHOGW-4	NO CONTAMINATION FOUND			

TABLE 4 - 9

HERBICIDES DETECTED IN FIELD BLANKS
NCBC GULFPORT HO

SDG NUMBER	BLANK ID	RELATED ENVIRONMENTAL SAMPLES	CONTAMINANT	FB CONC.	UNITS	VALIDATION QUALIFIER
27176	BS01DI	GPTHOGW-1, GPTHOGW-1D, GPTHOGW-2, GPTHOGW-3, GPTHOGW-4	NO CONTAMINATION FOUND			
	BS01PI	GPTHOGW-1, GPTHOGW1D, GPTHOGW-2, GPTHOGW-3, GPTHOGW-4	NO CONTAMINATION FOUND			

TABLE 4 - 10

TOTAL METALS/CYANIDE DETECTED IN FIELD BLANKS
NCBC GULFPORT HO

SDG NUMBER	BLANK ID	RELATED ENVIRONMENTAL SAMPLES	CONTAMINANT	FB CONC.	UNITS	VALIDATION QUALIFIER
27176	BS01DI	GPTHOGW-1, GPTHOGW-1D, GPTHOGW-2, GPTHOGW-3, GPTHOGW-4	BARIUM	1.3	ug/L	
	BS01PI	GPTHOGW-1, GPTHOGW1D, GPTHOGW-2, GPTHOGW-3, GPTHOGW-4	BARIUM	6.4	ug/L	
		GPTHOGW-1, GPTHOGW1D, GPTHOGW-2, GPTHOGW-3, GPTHOGW-4	ZINC	5.0	ug/L	

TABLE 4 - 11

SULFIDE DETECTED IN FIELD BLANKS
NCBC GULFPORT HO

SDG NUMBER	BLANK ID	RELATED ENVIRONMENTAL SAMPLES	CONTAMINANT	FB CONC.	UNITS	VALIDATION QUALIFIER
27176	BS01DI	GPTHOGW-1, GPTHOGW-1D, GPTHOGW-2, GPTHOGW-3, GPTHOGW-4	SULFIDE	0.2	mg/L	
	BS01PI	GPTHOGW-1, GPTHOGW1D, GPTHOGW-2, GPTHOGW-3, GPTHOGW-4	NO CONTAMINATION FOUND			

4 - 12

TABLE 4 - 12

GC/MS VOLATILES DETECTED IN EQUIPMENT RINSEATE BLANKS
NCBC GULFPORT HO

SDG NUMBER	BLANK ID	RELATED ENVIRONMENTAL SAMPLES	CONTAMINANT	RB CONC.	UNITS	VALIDATION QUALIFIER
27176	BS-01-RI	GPTHOGW-1, GPTHOGW-1D, GPTHOGW-2, GPTHOGW-3, GPTHOGW-4	ACETONE	14	ug/L	

TABLE 4 - 13

DIOXIN/FURANS DETECTED IN EQUIPMENT RINSEATE BLANKS
NCBC GULFPORT HO

SDG NUMBER	BLANK ID	RELATED ENVIRONMENTAL SAMPLES	CONTAMINANT	RB CONC.	UNITS	VALIDATION QUALIFIER
27176	BS-01-RI	GPTHOGW-1, GPTHOGW-1D, GPTHOGW-GPTHOGW-3, GPTHOGW-4	GROSS CONTAMINATION FOUND **			
	BS-01-RI RE	GPTHOGW-1, GPTHOGW-1D, GPTHOGW-GPTHOGW-3, GPTHOGW-4	GROSS CONTAMINATION FOUND **			

** - GROSS CONTAMINATION FOUND IN THE EQUIPMENT RINSEATE BLANK AND ITS RE-EXTRACTION AND REANALYSIS, WHICH WAS DETERMINED BY THE DATA VALIDATOR TO BE THE LIKELY RESULT OF LABORATORY CONTAMINATION. THE FIELD SAMPLES WERE NOT QUALIFIED. HOWEVER, THE RINSEATE BLANKS WERE REJECTED, R.

TABLE 4 - 14

SEMIVOLATILES DETECTED IN EQUIPMENT RINSEATE BLANKS
NCBC GULFPORT HO

SDG NUMBER	BLANK ID	RELATED ENVIRONMENTAL SAMPLES	CONTAMINANT	RB CONC.	UNITS	VALIDATION QUALIFIER
27176	BS01RI	GPTHOGW-1, GPTHOGW-1D, GPTHOGW-2, GPTHOGW-3, GPTHOGW-4	NO CONTAMINATION FOUND			

TABLE 4 - 15

POLYNUCLEAR AROMATIC HYDROCARBONS DETECTED IN EQUIPMENT RINSEATE BLANKS
NCBC GULFPORT HO

SDG NUMBER	BLANK ID	RELATED ENVIRONMENTAL SAMPLES	CONTAMINANT	RB CONC.	UNITS	VALIDATION QUALIFIER
27176	BS01RI	GPTHOGW-1, GPTHOGW-1D, GPTHOGW-2, GPTHOGW-3, GPTHOGW-4	NO CONTAMINATION FOUND			

TABLE 4 - 16

PESTICIDES/PCBS DETECTED IN EQUIPMENT RINSEATE BLANKS
NCBC GULFPORT HO

SDG NUMBER	BLANK ID	RELATED ENVIRONMENTAL SAMPLES	CONTAMINANT	RB CONC.	UNITS	VALIDATION QUALIFIER
27176	BS01RI	GPTHOGW-1, GPTHOGW-1D, GPTHOGW-2, GPTHOGW-3, GPTHOGW-4	NO CONTAMINATION FOUND			

TABLE 4 - 17

KEPONE DETECTED IN EQUIPMENT RINSEATE BLANKS
NCBC GULFPORT HO

SDG NUMBER	BLANK ID	RELATED ENVIRONMENTAL SAMPLES	CONTAMINANT	RB CONC.	UNITS	VALIDATION QUALIFIER
27176	BS01RI	GPTHOGW-1, GPTHOGW-1D, GPTHOGW-2, GPTHOGW-3, GPTHOGW-4	NO CONTAMINATION FOUND			

4 - 18

TABLE 4 - 18

ORGANOPHOSPHOROUS PESTICIDES DETECTED IN EQUIPMENT RINSEATE BLANKS
NCBC GULFPORT HO

SDG NUMBER	BLANK ID	RELATED ENVIRONMENTAL SAMPLES	CONTAMINANT	RB CONC.	UNITS	VALIDATION QUALIFIER
27176	BS01RI	GPTHOGW-1, GPTHOGW-1D, GPTHOGW-2, GPTHOGW-3, GPTHOGW-4	NO CONTAMINATION FOUND			

TABLE 4 - 19

HERBICIDES DETECTED IN EQUIPMENT RINSEATE BLANKS
NCBC GULFPORT HO

SDG NUMBER	BLANK ID	RELATED ENVIRONMENTAL SAMPLES	CONTAMINANT	RB CONC.	UNITS	VALIDATION QUALIFIER
27176	BS01RI	GPTHOGW-1, GPTHOGW-1D, GPTHOGW-2, GPTHOGW-3, GPTHOGW-4	NO CONTAMINATION FOUND			

TABLE 4 - 20

TOTAL METALS/CYANIDE DETECTED IN EQUIPMENT RINSEATE BLANKS
NCBC GULFPORT HO

SDG NUMBER	BLANK ID	RELATED ENVIRONMENTAL SAMPLES	CONTAMINANT	RB CONC.	UNITS	VALIDATION QUALIFIER
27176	BS01RI	GPTHOGW-1, GPTHOGW-1D, GPTHOGW-2, GPTHOGW-3, GPTHOGW-4	BARIUM	1.2	ug/L	

TABLE 4 - 21

SULFIDE DETECTED IN EQUIPMENT RINSEATE BLANKS
NCBC GULFPORT HO

SDG NUMBER	BLANK ID	RELATED ENVIRONMENTAL SAMPLES	CONTAMINANT	RB CONC.	UNITS	VALIDATION QUALIFIER
27176	BS01RI	GPTHOGW-1, GPTHOGW-1D, GPTHOGW-2, GPTHOGW-3, GPTHOGW-4	NO CONTAMINATION FOUND			

TABLE 4 - 22

GC/MS VOLATILES DETECTED IN METHOD BLANKS
NCBC GULFPORT HO

SDG NUMBER	BLANK ID	RELATED ENVIRONMENTAL SAMPLES	CONTAMINANT	MB CONC.	UNITS	VALIDATION QUALIFIER
27176	VBLK5Q	BS-01-PI, BS-01-RI, GPTHOGW1, GPTHOGW-3, GPTHOGW-4, BS-01-TB	METHYLENE CHLORIDE	1	ug/L	CRQL
		GPTHOGW1D, GPTHOGW-2, BS-01-RI	METHYLENE CHLORIDE	1	ug/L	

TABLE 4 - 23

DIOXIN/FURANS DETECTED IN METHOD BLANKS
NCBC GULFPORT HO

SDG NUMBER	BLANK ID	RELATED ENVIRONMENTAL SAMPLES	CONTAMINANT	MB CONC.	UNITS	VALIDATION QUALIFIER
27176	WBL05254	BS-01-PI, BS-01-RI, GPTHOGW1, GPTHOGW-3, GPTHOGW-4, GPTHOGW1D, GPTHOGW-2, BS-01-RI	2,3,4,7,8-PeCDF	8.07	pg/L	

TABLE 4 - 24

SEMIVOLATILES DETECTED IN METHOD BLANKS
NCBC GULFPORT HO

SDG NUMBER	BLANK ID	RELATED ENVIRONMENTAL SAMPLES	CONTAMINANT	MB CONC.	UNITS	VALIDATION QUALIFIER
27176	SBLK1	BS-01-DI, BS-01-PI, BS-01-PIRE, BS-01-RI, GPTHOGW-2, GPTHOGW1, GPTHOGW1D, GPTHOGW1DR, GPTHOGW1DMS, GPTHOGW1DMSD, GPTHOGW1DMSR	NO CONTAMINATION FOUND			
	SBLK2	GPTHOGW-3, GPTHOGW-4	N-NITROSODIPHENYLAMINE	2	ug/L	CRQL

TABLE 4 - 25

POLYNUCLEAR AROMATIC HYDROCARBONS DETECTED IN METHOD BLANKS
NCBC GULFPORT HO

SDG NUMBER	BLANK ID	RELATED ENVIRONMENTAL SAMPLES	CONTAMINANT	MB CONC.	UNITS	VALIDATION QUALIFIER
27176	NWB10523	BS-01-DI, BS-01-PI, BS-01-RI, GPTHOGW-2, GPTHOGW1, GPTHOGW-3, GPTHOGW1D, GPTHOGW-4, GPTHOGW1DMS, GPTHOGW1DMSD	GROSS CONTAMINATION FOUND **			
	NWB10527	BS-01-DIRE, BS-01-PIRE, BS-01-RIRE, GPTHOGW2RE, GPTHOGW1RE, GPTHOGW3R GPTHOGW1DRE, GPTHOGW4RE, GPTHOGW1 GPTHOGW1DRX2	NO CONTAMINATION FOUND			

** - ALL FIELD AND QC SAMPLES FROM ORIGINAL EXTRACTION REJECTED, R, DUE TO A SPIKING ERROR.

TABLE 4 - 26

PESTICIDE/PCBS DETECTED IN METHOD BLANKS
NCBC GULFPORT HO

SDG NUMBER	BLANK ID	RELATED ENVIRONMENTAL SAMPLES	CONTAMINANT	MB CONC.	UNITS	VALIDATION QUALIFIER
27176	W05204B1	BS-01-DI, BS-01-PI, BS-01-RI, GPTHOGW-2, GPTHOGW1, GPTHOGW-3, GPTHOGW1D, GPTHOGW-4, GPTHOGW1DMS, GPTHOGW1DMSD	NO CONTAMINATION FOUND			

TABLE 4 - 27

KEPONE DETECTED IN METHOD BLANKS
NCBC GULFPORT HO

SDG NUMBER	BLANK ID	RELATED ENVIRONMENTAL SAMPLES	CONTAMINANT	MB CONC.	UNITS	VALIDATION QUALIFIER
27176	W05204B1 K	BS-01-DI, BS-01-PI, BS-01-RI, GPTHOGW-2, GPTHOGW1, GPTHOGW-3, GPTHOGW1D, GPTHOGW-4, GPTHOGW1DMS, GPTHOGW1DMSD	NO CONTAMINATION FOUND			

TABLE 4 - 28

ORGANOPHOSPHOROUS PESTICIDES DETECTED IN METHOD BLANKS
NCBC GULFPORT HO

SDG NUMBER	BLANK ID	RELATED ENVIRONMENTAL SAMPLES	CONTAMINANT	MB CONC.	UNITS	VALIDATION QUALIFIER
27176	W05204B1	BS-01-DI, BS-01-PI, BS-01-RI, GPTHOGW-2, GPTHOGW1, GPTHOGW-3, GPTHOGW1D, GPTHOGW-4, GPTHOGW1DMS, GPTHOGW1DMSD	NO CONTAMINATION FOUND			
	W06014B1	BS-01-PIRE	NO CONTAMINATION FOUND			

TABLE 4 - 29

HERBICIDES DETECTED IN METHOD BLANKS
NCBC GULFPORT HO

SDG NUMBER	BLANK ID	RELATED ENVIRONMENTAL SAMPLES	CONTAMINANT	MB CONC.	UNITS	VALIDATION QUALIFIER
27176	W05194B1	BS-01-DI, BS-01-PI, BS-01-RI, GPTHOGW-2, GPTHOGW1, GPTHOGW-3, GPTHOGW1D, GPTHOGW-4, GPTHOGW1DMS, GPTHOGW1DMSD	NO CONTAMINATION FOUND			

TABLE 4 - 30

TOTAL METALS/CYANIDE DETECTED IN METHOD BLANKS
NCBC GULFPORT HO

SDG NUMBER	BLANK ID	RELATED ENVIRONMENTAL SAMPLES	CONTAMINANT	MB CONC.	UNITS	VALIDATION QUALIFIER
27176	W05194B1	BS-01-DI, BS-01-PI, BS-01-RI, GPTHOGW-2, GPTHOGW1, GPTHOGW-3, GPTHOGW1D, GPTHOGW-4, GPTHOGW1DMS, GPTHOGW1DMSD	COPPER	7.9	ug/L	U
			SELENIUM	-1.4	ug/L	J/UJ
			THALLIUM	-1.4	ug/L	J/UJ

than the IDL, the sample result for the blank contaminant was amended as estimated non-detected.

- J Validation Qualifier. If a sample result for the blank contaminant was greater than the IDL and less than 10 times the blank value, when the absolute of the negative blank value id greater than the IDL the result was amended as estimated at the laboratory value.

4.1 Trip Blanks

Trip blanks contained deionized water from the laboratory and consisted of samples bottles which were similar to the environmental sample containers. The trip blanks were prepared and packaged at the laboratory prior to the sampling event and traveled with the sample bottles to the site. The trip blank bottles were not opened at the site or anytime prior to laboratory analysis.

Target compounds detected in the trip blank sample (Table 4-1) consisted of:

- GC/MS Volatiles (Table 4-1)
  acetone

The compound acetone is a common laboratory contaminant and its presence in the trip blank may be attributed to laboratory contamination. Some analytical results required qualification due to the trip blank contamination. However, based on the assessment of the trip blank results for representativeness, the analytical data is acceptable.

4.2 Field Blanks

The field blank, BS-01-PI, was a sample of potable water from the source at the field staging area and the deionized water blank, BS-01-DI, was prepared from the source potable water. The field blanks were prepared at the site and placed in containers that were similar to those used for the environmental samples. Polynuclear aromatic hydrocarbons, pesticide/PCBs, kepone, organophosphorous pesticides, and herbicides target compounds were not detected in the field blank samples (Tables 4-5, 4-6, 4-7, 4-8, and 4-9). Target compounds and analytes detected in the field blank samples consisted of:

- GC/MS Volatiles (Table 4-2)
  acetone
  chloroform

- Dioxin/Furan (Table 4-3)
  Total TCDD
  1,2,3,7,8,9-HxCDF
  Total HxCDF

- Semivolatiles (Table 4-4)
  n-nitrosodiphenylamine

- Inorganics (Table 4-10)
  barium
  zinc

- Sulfide (Table 4-11)

The detected acetone result in both field blanks is attributed to laboratory contamination because acetone is a common laboratory contaminant. The chloroform detected in the potable water field blank is a trihalomethane, which can be formed when "free" chloride ions are present. It is an artifact of the water source. The dioxin/furan compounds detected in the field blanks are not common blank contaminants. The results detected are most likely the result of laboratory contamination, i.e., glassware used by the laboratory for the extraction process. The inorganic analytes can be attributed to the water source, the water treatment system that was used to make the water or laboratory artifacts. The metals analytes were detected below the CRDL, and none of the sample data required qualification due to the metals analytes in the field blanks.

Target analytes were detected in some of the field blanks. Some of the analytical data required qualification. However, based on assessment of field blanks for representativeness the analytical data was acceptable for the SDG.

4.3 Equipment Rinseate Blanks

The equipment rinseate blank was prepared by rinsing a piece of decontaminated sampling equipment with deionized water from a field DI unit. A sample of this water was collected and placed in sample containers similar to those used for the environmental samples. Semivolatile organics, polynuclear aromatic hydrocarbons, pesticides/PCBs, kepone, organophosphorous pesticides, herbicides, and sulfide target compounds were not detected in equipment rinseate blank samples (Tables 4-14, 4-15, 4-16, 4-17, 4-18, 4-19, and 4-21). Target analytes detected in the equipment rinseate blank samples consisted of:

- GC/MS Volatiles (Table 4-12)
  acetone
- Dioxin/Furan (Table 4-13)
  ***
- Metals (Table 4-20)
  barium

The detected acetone is a common laboratory contaminant and may be attributed to laboratory contamination. The dioxin/furan analysis of the equipment rinseate blank exhibited gross contamination in both the original extraction and analysis, and the re-extraction and analysis. This contamination could be due to laboratory contamination since this type of field contamination is not usual. The field samples did not require qualification. However, the rinseate blanks were rejected, R, due to gross contamination. The inorganic analyte can be attributed to the water source, the water treatment system that was used to make the water or laboratory artifacts. The metals analyte was detected below the CRDL. The data did not require qualification due to the detected barium in the rinseate blank.

Based on assessment of equipment rinseate blanks for representativeness the analytical data was acceptable for the SDG, with the exception of the dioxin/furan fraction. Twenty-seven (27) dioxin/furan data points were rejected due to the contaminated equipment rinseate blanks. The completeness goal for the QC samples fell below the goal of 85% (Appendix C). However, the completion goal for the fraction was still met.

4.4 Method Blanks

The method blanks were a sample of deionized water that is prepared by the laboratory at the time of analysis. Method blanks undergo the same analytical process as the corresponding environmental samples and associated field blanks. The purpose of the method blank is to assess the potential for target compounds and analytes to "contaminate" the sample during analysis. pesticides/PCBs, kepone, organophosphorous pesticides, and herbicides target compounds were not detected in method blank samples (Tables 4-26, 4-27, 4-28, and 4-29). Target analytes detected in the method blank samples consisted of:

- GC/MS Volatiles (Table 4-22)
  methylene chloride
- Dioxin/Furans (Table 4-23)
  2,3,4,7,8-PeCDF
- Semivolatile Organics (Table 4-24)
  n-nitrosodiphenylamine
- Polynuclear Aromatic Hydrocarbons (PAH) (Table 4-25)
  all compounds
- Inorganics (Table 4-30)
  copper
  selenium
  thallium

The detectable acetone results are common laboratory contaminants and are attributed to laboratory contamination. The dioxin/furan congener is an unusual laboratory contaminant and is likely an artifact from glassware used during the extraction process. The n-nitrosodiphenylamine is possibly due to carry over from the instrument calibration or dirty glassware encountered during the extraction process. The PAH compounds in the method blank were the result of a spiking error by the laboratory. All samples and QC were re-extracted and analyzed with acceptable results. The copper can be attributed to the water source, the water treatment system that was used to make the water or laboratory artifacts. The selenium and thallium were negative in concentration and can be attributed to instrumentation anomalies.

Because target analytes were detected in some of the method blanks, some of the analytical results were qualified. However, based on assessment of method blanks for representativeness the analytical data was acceptable for each SDG.

4.5 Holding Times

Holding times requirements are utilized in an effort to minimize the degradation or concentration of constituents in a particular matrix over time. The stability of the constituents is determined to the best extent and then a reasonable time limit is imposed under which the samples must be extracted or prepared and then analyzed. The holding times regulations assume that the samples have been properly preserved according to the guidelines, either at the laboratory or in the field. Analytical results from samples with holding time violations are qualified as estimated, J/UJ, due to the potential for compromising the integrity of the samples.

All holding times requirements, extraction and analytical, were met with the exception of sample BS-01-PIRE for semivolatiles and organophosphorous pesticides, and all samples for the PAH fraction. All results qualified for holding times non-compliance are considered to be useable. The positive results are qualified as estimated, J, in samples with holding times exceeded by up to five (5) days. The non-detect and positive results are qualified as estimated, J/UJ, in samples with holding times exceeded from six (6) to fifteen (15) days. No analytical data was rejected due to holding times violations.

5.0 COMPARABILITY

Comparability is qualitative measure designed to express the confidence with which one data set may be compared to another. The analytical samples were collected and transported to the chemical analytical laboratory in accordance with standard procedures and were analyzed in conformance with acceptable USEPA procedures (Refer to Table 5-1 below). The analytical data are reported in standard units (micrograms per liter, micrograms per kilogram, etc.).

The methods used to collect the environmental samples and the methods used to analyze the samples should assure comparability of the analytical data.

TABLE 5-1
USEPA Procedures (CLP or SW-846 Methodologies)

U.S. EPA Method	Description
SW-846, Method 8240	Volatile Organics
SW-846, Method 8290	Dioxin/Furans
SW-846, Method 8270	Semivolatile Organics
SW-846, Method 8310	Polynuclear Aromatic Hydrocarbons
SW-846, Method 8080	Pesticides/PCBs/Kepone
SW-846, Method 8140	Organophosphorous Pesticides
SW-846, Method 8140	Chlorinated Herbicides
CLP, ILMO2.1	Metals
CLP, ILMO2.1	Cyanide
SW-846, Method 9030	Sulfide

6.0 COMPLETENESS

Completeness is the quantitative measure of the amount of data obtained from a measurement process compared with the amount expected to be obtained under the conditions of measurement. The completeness goal for laboratory analysis for this project was 85 percent useable data. Unusable analytical data are those results reported by the laboratory but rejected during the data validation process. A summary of the completeness goal for NCBC Gulfport is provided in Table 6-1. For more detailed completeness goal tables, please refer to Appendix C.

TABLE 6-1
COMPLETION GOAL (>85%)

	QC	GW	OVERALL
GC/MS Volatiles	96.6	96.6	96.6
Dioxin/Furans	75.0	100.0	87.5
Semivolatiles	86.9	98.6	92.8
PAHs	100.0	100.0	100.0
Pesticide/PCBs	100.0	100.0	100.0
Organophos. Pest.	100.0	100.0	100.0
Herbicides	100.0	100.0	100.0
Kepone	100.0	100.0	100.0
Metals	95.6	100.0	97.8
Cyanide	100.0	100.0	100.0
Sulfide	100.0	100.0	100.0

MATRIX KEY

QC = QC Samples
GW = Ground Water Samples

The analytical data met the 85 percent completeness goal for every fraction. The narrative following describes any extenuating factors involved in the data resolution.

GC/MS Volatiles, Non-Compliant RRFs Two (2) volatile compounds; isobutyl alcohol and 1,4-dioxane, did not always meet the initial and continuing calibration criteria of >0.05 for RRF (Relative Response Factor). The RRF values fell below 0.05 in analyses affecting the SDG associated with this project. All non-detect sample results associated with the initial and continuing calibrations that exhibited either of the two (2) compounds with non-compliant RRFs are rejected, R, (Table A-1). All positive sample results associated with the initial and continuing calibrations that exhibited either of the two (2) compounds with non-compliant RRFs are qualified as estimated, J/UJ, (Table A-1). The non-compliant calibrations resulted in the rejection of eighteen (18) data points. The completeness goal for the fraction was still met.

Non-detect results that were rejected for the compounds may be evaluated by adjusting the CRQL to the concentration of the continuing calibration standard and qualifying the results as not detected at an estimated concentration, UJ. The non-detect qualification at the concentration of the continuing calibration standard insures that the instrumentation is capable of detecting the compound at a known concentration.

Semivolatiles, Non-Compliant RRFs and/or %Ds Two (2) semivolatile compounds; hexachlorophene and benzidine, did not always meet the initial and continuing calibration criteria of

>0.05 for RRF (Relative Response Factor) or %D (Percent Difference). The RRF values fell below 0.05 or the %D value was above 90% in analyses affecting the SDG associated with this project. All non-detect sample results associated with the initial and continuing calibrations that exhibited either of the two (2) compounds with non-compliant RRFs or %Ds are rejected, R, (Table A-1). All positive sample results associated with the initial and continuing calibrations that exhibited either of the two (2) compounds with non-compliant RRFs or %Ds are qualified as estimated, J/UJ, (Table A-1). The non-compliant calibrations resulted in the rejection of eighteen (18) data points. The completeness goal for the fraction was still met.

Non-detect results that were rejected for the compounds may be evaluated by adjusting the CRQL to the concentration of the continuing calibration standard and qualifying the results as not detected at an estimated concentration, UJ. The non-detect qualification at the concentration of the continuing calibration standard insures that the instrumentation is capable of detecting the compound at a known concentration.

Semivolatiles, Appendix IX Calibration The Appendix IX compound results for samples GPTHOGW1DR and GPTHOGW1DMSR were rejected because the laboratory did not analyze a continuing calibration standard with the Appendix IX compounds in it. This constituted a rejection of forty (40) data points. The completion goal was still met for the fraction.

GC/MS Volatiles/Semivolatiles Target compounds for both the volatile and semivolatile fractions were qualified because of non-compliant calibrations. Volatile and semivolatile compounds did not always meet the initial and/or continuing calibration criteria for RSD (Relative Standard Deviation), and %D (Percent Difference). All results qualified for calibration % RSD and % D deficiencies (J/UJ) are considered to be useable. For the compounds in the GC/MS volatile and semivolatile analyses that did not meet calibration criteria, all positive results are qualified as estimated (J) (%Ds >25%) and all non detect results are qualified as estimated (UJ) (>50% D <90%) due to calibration deficiencies.

Semivolatiles Two (2) samples; GPTHOGW1D & GPTHOGW1DMS, were rejected, R, in favor of the re-extracted and analyzed results due to a laboratory error. There was no impact on the completion goal due to these rejections since viable data points were obtained from the reanalysis results.

Polynuclear Aromatic Hydrocarbons The laboratory spiked matrix spike solution into all QC and field samples in the initial extraction batch of samples for this SDG. Therefore, all of the original results were rejected. However, the re-extraction and analysis provided acceptable results for all data points. Therefore, there was no impact on the completion goal due to the error.

Metals Target analytes lead and selenium were qualified as estimated, J/UJ, due to unacceptable graphite furnace MSA results in samples from the SDG. All results qualified for non-compliant MSA recoveries are considered to be useable. If the recovery was above the QC limits, only the positive results for the analyte were qualified. If the recovery was below the QC limits, or the correlation coefficient of an MSA curve was below the QC limits, positive and non-detect results were qualified as estimated, J/UJ.

7.0 PARCC SUMMARY

The purpose of evaluating the quality of the analytical data using the PARCC criteria was to address the qualification of the data in regards to evaluation of the presence, magnitude and characteristics of hazardous substances at NCBC Gulfport. Overall, the chemical analytical data are acceptable and exceeded the completion goal of 85 percent. Tables 7-1 and 7-2 provides a tabulation of the assessment of PARCC criteria each SDG for water samples and quality control samples, respectively.

7.1 Water Samples

The analytical data for this matrix was acceptable for all PARCC criteria categories except completeness. Eight (8) volatile data points were rejected due to initial and/or continuing calibration standards which did not meet QC criteria. The completion goal was met. Six (6) semivolatile data points were rejected due to initial and/or continuing calibration standards which did not meet QC criteria. The completion goal was met.

7.2 QC Samples

The analytical data for this matrix was acceptable for the PARCC criteria of precision and comparability. Thirteen (13) semivolatile data points in the potable water field blank were rejected due to surrogate recovery less than 10%. The completion goal was met. Ten (10) volatile data points were rejected due to initial and/or continuing calibration standards which did not meet QC criteria. The completion goal was met. Four (4) semivolatile data points were rejected due to initial and/or continuing calibration standards which did not meet QC criteria. The completion goal was met. Forty (40) semivolatile data points were rejected in the field duplicate sample reanalysis due to the lack of a continuing calibration standard containing the Appendix IX compounds. The completion goal was met. Twenty-seven (27) dioxin/furan congeners were rejected in the rinseate blank due to gross contamination. The completion goal was met. Three (3) metals data points for lead were rejected in the QC blanks due to MS %R which was below 30%. The completaion goal was met.

TABLE 7-1
PARCC CRITERIA SUMMARY
WATER SAMPLES
NCBC GULFPORT

SDGs	PRECISION	ACCURACY	REPRESENT-ATIVENESS	COMPARABILITY	COMPLETENESS
27176	ACCEPTABLE	ACCEPTABLE	ACCEPTABLE	ACCEPTABLE	ACCEPTABLE (1) (2) WITH REJECTIONS

(1) Eight (8) volatile data points were rejected due to initial and/or continuing calibration standards which did not meet QC criteria. Completion goal was met.

(2) Six (6) semivolatile data points were rejected due to initial and/or continuing calibration standards which did not meet QC criteria. Completion goal was met.

TABLE 7 - 2
PARCC CRITERIA SUMMARY
QUALITY CONTROL SAMPLES
NCBC GULFPORT HO

SDGs	PRECISION	ACCURACY	REPRESENT-ATIVENESS	COMPARABILITY	COMPLETENESS
27176	ACCEPTABLE	ACCEPTABLE (1) (6) WITH REJECTIONS	ACCEPTABLE (5) WITH REJECTIONS	ACCEPTABLE	ACCEPTABLE (1 - 6) WITH REJECTIONS

(1) Thirteen (13) semivolatile data points in the potable water blank were rejected due to surrogate recovery less than 10%. Completion goal was met.
(2) Ten (10) volatile data points were rejected due to initial and/or continuing calibration standards which did not meet QC criteria. Completion goal was met.
(3) Four (4) semivolatile data points were rejected due to initial and/or continuing calibration standards which did not meet QC criteria. Completion goal was met.
(4) Forty (40) semivolatile data points were rejected in the field duplicate sample reanalysis due to the lack of a continuing calibration standard containing the Appendix IX compounds. Completion goal was met.
(5) Twenty-seven (27) dioxin/furan congeners were rejected in the rinseate blank due to gross contamination. Completion goal was met.
(6) Three (3) metals data points for lead were rejected due to matrix spike recovery less than 30% in the QC blanks.

APPENDIX A

CALIBRATION SUMMARY

TABLE A-1

INITIAL AND CONTINUING CALIBRATION
VOLATILE ORGANIC COMPOUNDS
NCBC GULFPORT HO

ICAL = INITIAL CALIBRATION = %RSD	SDG 27176	
CCAL = CONTINUING CALIBRATION = %	**ICAL1**	**CCAL1**
DATE	050594	052394
INSTRUMENT ID	HP1	HP1
CALIBRATION CRITERIA	RRF	RRF/%D
ISOBUTYL ALCOHOL	0.047	0.044
1,4-DIOXANE	0.003	0.003
BROMOMETHANE		27.8

SDGS, STANDARDS, AND ASSOCIATED SAMPLES

SDG 27176

ICAL1: NONE

CCAL1: BS-01-DI, BS-01-PI, BS-01-RI, BS-01-TB, GPTHOGW-1, GPTHOGW-1D, GPTHOGW-2, GPTHOGW-3, GPTHOGW-4

TABLE A - 2

INITIAL AND CONTINUING CALIBRATION
SEMIVOLATILE ORGANIC COMPOUNDS
NCBC GULFPORT HO

ICAL = INITIAL CALIBRATION = %RSD	SDG 27176					
CCAL = CONTINUING CALIBRATION = %D	**ICAL1**	**CCAL1**	**CCAL2**	**CCAL3**	**CCAL4**	**CCAL5**
DATE	051394	052694	052794	060194	060394	060694
INSTRUMENT ID	4600	4600	4600	4600	4600	4600
CALIBRATION CRITERIA	RRF/%RSD	RRF/%D	%D	%D	%D	%D
HEXACHLOROPHENE	0.019/44.4	0.005/73.7	-99.9			
3,3'-DIMETHYLBENZIDINE	51.1	-45.9	-66.7			
4-CHLOROANILINE		32.0				26.1
4-NITROPHENOL		37.6				
BENZOIC ACID		26.7		26.7		
1,3,5-TRINITROBENZENE		33.1				
4-NITROQUINOLINE-1-OXIDE		41.8				
BENZYL ALCOHOL			-27.2			
2,4-DINITROPHENOL			31.2		33.2	
BENZIDINE			-99.9		-99.9	-40.2
2,4,6-TRIBROMOPHENOL					32.8	34.4

SDGS, CALIBRATIONS AND ASSOCIATED SAMPLES:

SDG 27176

ICAL1: NONE

CCAL1: BS-01-DI, BS-01-PI, BS-01-RI, GPTHOGW1, GPTHOGW1D,
GPTHOGW-1DMS, GPTHOGW-1DMSD, GPTHOGW-2

CCAL2: GPTHOGW-3, GPTHOGW-4

CCAL3: GPTHOGW1DMSR

CCAL4: GPTHOGW1DR

CCAL5: BS-01-PIRE

APPENDIX B

SERIAL DILUTION SUMMARY

TABLE B - 1

WATER SAMPLE SERIAL DILUTION
METALS SUMMARY TABLE
NCBC GULFPORT HO

SAMPLE GPTHOGW-4		SDG 27176
%D = PERCENT DIFFERENCE		%D
METALS ANALYTES	UNITS	
ANTIMONY	ug/L	NC
ARSENIC	ug/L	NA
BARIUM	ug/L	1.1
BERYLLIUM	ug/L	100
CADMIUM	ug/L	NC
CHROMIUM	ug/L	2.1
COBALT	ug/L	100
COPPER	ug/L	150
LEAD	ug/L	NA
MERCURY	ug/L	NA
NICKEL	ug/L	100
SELENIUM	ug/L	NA
SILVER	ug/L	NC
THALLIUM	ug/L	NA
VANADIUM	ug/L	3.4
ZINC	ug/L	1.4
TIN	ug/L	NC
CYANIDE	ug/L	NR

*** - INDICATES VALUE OUTSIDE QC LIMITS**
NC DENOTES NO CALCULATION DUE TO NON-DETECT RESULTS IN BOTH SAMPLES
NA DENOTES COMPOUND NOT ANALYZED FOR

CORRESPONDING SDG'S AND ASSOCIATED SAMPLES

27176: GPTHOGW-1, GPTHOGW-1D, GPTHOGW-2, GPTHOGW-3, GPTHOGW-4

ANALYTE	RPD
	WATER
ALL ICP ANALYTES	+/-10%

+/-10% RULE ONLY APPLIES TO RESULTS GREATER THAN 50 TIMES THE IDL
(SOME VALUES ROUNDED TO LIMIT %Ds TO THREE (3) SIGNIFICANT FIGURES)

APPENDIX C

REJECTED DATA SUMMARY

TABLE C-1
GC/MS VOLATILES - REJECTED DATA
NCBC GULFPORT HO

SDG	# SAMPLES/MATRIX			# OF COMPOUNDS REJECTED PER MATIX	
	QC	GW		QC	GW
27176	5	4		10	8
GRAND TOTAL	5	4		10	8
COMPLETION GOAL (>85%)				96.6%	96.6%

OVERALL COMPLETENESS
96.6%

MATRIX KEY

QC = QC SAMPLES
GW = GROUND WATER SAMPLES

*** 59 TARGET COMPOUNDS PER SAMPLE**

TABLE C - 2
DIOXIN/FURANS - REJECTED DATA
NCBC GULFPORT HO

SDG	# SAMPLES/MATRIX			# OF COMPOUNDS REJECTED PER MATIX	
	QC	GW		QC	GW
27176	4	4		27	0
GRAND TOTAL	4	4		27	0
COMPLETION GOAL (>85%)				75.0%	100.0%

OVERALL COMPLETENESS
87.5%

MATRIX KEY

QC = QC SAMPLES
GW = GROUND WATER SAMPLES

*** 27 TARGET CONGENERS/ISOMERS PER SAMPLE**

TABLE C - 3
SEMIVOLATILES - REJECTED DATA
NCBC GULFPORT HO

SDG	# SAMPLES/MATRIX			# OF COMPOUNDS REJECTED PER MATIX	
	QC	GW		QC	GW
27176	4	4		57	6
GRAND TOTAL	4	4		57	6
COMPLETION GOAL (>85%)				86.9%	98.6%

OVERALL COMPLETENESS
92.8%

MATRIX KEY

QC = QC SAMPLES
GW = GROUND WATER SAMPLES

*** 109 TARGET COMPOUNDS PER SAMPLE**

TABLE C - 4
POLYNUCLEAR AROMATIC HYDROCARBONS - REJECTED DATA
NCBC GULFPORT HO

SDG	# SAMPLES/MATRIX			# OF COMPOUNDS REJECTED PER MATIX	
	QC	GW		QC	GW
27176	4	4		0	0
GRAND TOTAL	4	4		0	0
COMPLETION GOAL (>85%)				100.0%	100.0%

OVERALL COMPLETENESS
100.0%

MATRIX KEY

QC = QC SAMPLES
GW = GROUND WATER SAMPLES

*** 16 TARGET CONGENERS/ISOMERS PER SAMPLE**

TABLE C - 5
PESTICIDE/PCBS - REJECTED DATA
NCBC GULFPORT HO

SDG	# SAMPLES/MATRIX			# OF COMPOUNDS REJECTED PER MATIX	
	QC	GW		QC	GW
27176	4	4		0	0
GRAND TOTAL	4	4		0	0
COMPLETION GOAL (>85%)				100.0%	100.0%

OVERALL COMPLETENESS
100.0%

MATRIX KEY

QC = QC SAMPLES
GW = GROUND WATER SAMPLES

*** 30 TARGET COMPOUNDS PER SAMPLE**

TABLE C - 6
ORGANOPHOSPHOROUS PESTICIDES - REJECTED DATA
NCBC GULFPORT HO

SDG	# SAMPLES/MATRIX			# OF COMPOUNDS REJECTED PER MATIX	
	QC	GW		QC	GW
27176	4	4		0	0
GRAND TOTAL	4	4		0	0
COMPLETION GOAL (>85%)				100.0%	100.0%

OVERALL COMPLETENESS
100.0%

MATRIX KEY

QC = QC SAMPLES
GW = GROUND WATER SAMPLES

*** 9 TARGET COMPOUNDS PER SAMPLE**

TABLE C - 7
HERBICIDES - REJECTED DATA
NCBC GULFPORT HO

SDG	# SAMPLES/MATRIX			# OF COMPOUNDS REJECTED PER MATIX	
	QC	GW		QC	GW
27176	4	4		0	0
GRAND TOTAL	4	4		0	0
COMPLETION GOAL (>85%)				100.0%	100.0%

OVERALL COMPLETENESS
100.0%

MATRIX KEY

QC = QC SAMPLES
GW = GROUND WATER SAMPLES

*** 4 TARGET COMPOUNDS PER SAMPLE**

TABLE C - 8
KEPONE - REJECTED DATA
NCBC GULFPORT HO

SDG	# SAMPLES/MATRIX		# OF COMPOUNDS REJECTED PER MATIX	
	QC	GW	QC	GW
27176	4	4	0	0
GRAND TOTAL	4	4	0	0
COMPLETION GOAL (>85%)			100.0%	100.0%

OVERALL COMPLETENESS
100.0%

MATRIX KEY

QC = QC SAMPLES
GW = GROUND WATER SAMPLES

*** 1 TARGET COMPOUND PER SAMPLE**

TABLE C - 9
TOTAL METALS - REJECTED DATA
NCBC GULFPORT HO

SDG	# SAMPLES/MATRIX			# OF COMPOUNDS REJECTED PER MATIX	
	QC	GW		QC	GW
27176	4	4		3	0
GRAND TOTAL	4	4		3	0
COMPLETION GOAL (>85%)				95.6%	100.0%

OVERALL COMPLETENESS
97.8%

MATRIX KEY

QC = QC SAMPLES
GW = GROUND WATER SAMPLES

*** 17 TARGET ANALYTES PER SAMPLE**

TABLE C - 10
CYANIDE - REJECTED DATA
NCBC GULFPORT HO

SDG	# SAMPLES/MATRIX			# OF COMPOUNDS REJECTED PER MATIX	
	QC	GW		QC	GW
27176	4	4		0	0
GRAND TOTAL	4	4		0	0
COMPLETION GOAL (>85%)				100.0%	100.0%

OVERALL COMPLETENESS
100.0%

MATRIX KEY

QC = QC SAMPLES
GW = GROUND WATER SAMPLES

*** 1 TARGET COMPOUND PER SAMPLE**

TABLE C - 11
SULFIDE - REJECTED DATA
NCBC GULFPORT HO

SDG	# SAMPLES/MATRIX			# OF COMPOUNDS REJECTED PER MATIX	
	QC	GW		QC	GW
27176	4	4		0	0
GRAND TOTAL	4	4		0	0
COMPLETION GOAL (>85%)				100.0%	100.0%

OVERALL COMPLETENESS
100.0%

MATRIX KEY

QC = QC SAMPLES
GW = GROUND WATER SAMPLES

*** 1 TARGET COMPOUND PER SAMPLE**

APPENDIX D

VALIDATED ANALYTICAL RESULTS

Validated Groundwater Results

PROJECT: NCBC GULFPORT, MISSISSIPPI — VOLATILE AQUEOUS ANALYSES (ug/l) — Validation Table

ANALYTE	CRQL	GPTHOGW-1	GPTHOGW-1D	GPTHOGW-2	GPTHOGW-3	GPTHOGW-4
SAMPLE LOCATION:		GPTHOGW-1	GPTHOGW-1D	GPTHOGW-2	GPTHOGW-3	GPTHOGW-4
LAB NUMBER:		27176005	27176006	27176007	27176008	27176009
DATE SAMPLED:		05/17/94	05/17/94	05/17/94	05/17/94	05/17/94
DATA ANALYZED:		05/23/94	05/23/94	05/23/94	05/23/94	05/23/94
DILUTION FACTOR:		1.0	1.0	1.0	1.0	1.0
Chloromethane	10	10 U	10 U	10 U	10 U	10 U
Bromomethane	10	10 U	10 U	10 U	10 U	10 U
Vinyl Chloride	10	10 U	10 U	10 U	10 U	10 U
Chloroethane	10	10 U	10 U	10 U	10 U	10 U
Methylene Chloride	5	5 U	5 U	5 U	5 U	5 U
Acetone	10	10 U	10 U	10 U	13 U	10 U
Carbon Disulfide	5	5 U	5 U	5 U	2 J	5 U
1,1-Dichloroethene	5	5 U	5 U	5 U	5 U	5 U
1,1-Dichloroethane	5	5 U	5 U	5 U	5 U	5 U
1,2-Dichloroethene (total)	5	5 U	5 U	5 U	5 U	5 U
Chloroform	5	5 U	5 U	5 U	5 U	5 U
1,2-Dichloroethane	5	5 U	5 U	5 U	5 U	5 U
2-Butanone	10	10 U	10 U	10 U	10 U	10 U
1,1,1-Trichloroethane	5	5 U	5 U	5 U	5 U	5 U
Carbon Tetrachloride	5	5 U	5 U	5 U	5 U	5 U
Bromodichloromethane	5	5 U	5 U	5 U	5 U	5 U
1,2-Dichloropropane	5	5 U	5 U	5 U	5 U	5 U
cis-1,3-Dichloropropene	5	5 U	5 U	5 U	5 U	5 U
Trichloroethene	5	5 U	5 U	5 U	5 U	5 U
Dibromochloromethane	5	5 U	5 U	5 U	5 U	5 U
1,1,2-Trichloroethane	5	5 U	5 U	5 U	5 U	5 U
Benzene	5	5 U	5 U	5 U	5 U	5 U
trans-1,3-Dichloropropene	5	5 U	5 U	5 U	5 U	5 U
Bromoform	5	5 U	5 U	5 U	5 U	5 U
4-Methyl-2-Pentanone	10	10 U	10 U	10 U	10 U	10 U
2-Hexanone	10	10 U	10 U	10 U	10 U	10 U
Tetrachloroethene	5	5 U	5 U	5 U	5 U	5 U
1,1,2,2-Tetrachloroethane	5	5 U	5 U	5 U	5 U	5 U
Toluene	5	5 U	5 U	5 U	5 U	5 U
Chlorobenzene	5	5 U	5 U	5 U	5 U	5 U
Ethylbenzene	5	5 U	5 U	5 U	5 U	5 U
Styrene	5	5 U	5 U	5 U	5 U	5 U
Xylene (total)	5	5 U	5 U	5 U	5 U	5 U
Dichlorodifluoromethane	10	10 U	10 U	10 U	10 U	10 U
Trichlorofluoromethane	5	5 U	5 U	5 U	5 U	5 U
Acrolein	100	100 U	100 U	100 U	100 U	100 U
Iodomethane	10	10 U	10 U	10 U	10 U	10 U
Acrylonitrile	100	100 U	100 U	100 U	100 U	100 U
Vinyl acetate	10	10 U	10 U	10 U	10 U	10 U
Dibromomethane	5	5 U	5 U	5 U	5 U	5 U
2-Chloroethyl vinyl ether	10	10 U	10 U	10 U	10 U	10 U
Ethyl methacrylate	5	5 U	5 U	5 U	5 U	5 U
1,2,3-Trichloropropene	5	5 U	5 U	5 U	5 U	5 U
trans-1,4-Dichloro-2-butene	5	5 U	5 U	5 U	5 U	5 U

PROJECT: NCBC GULFPORT, MISSISSIPPI — VOLATILE AQUEOUS ANALYSES (ug/l) — Validation Table

SAMPLE LOCATION:		GPTHOGW-1	GPTHOGW-1D	GPTHOGW-2	GPTHOGW-3	GPTHOGW-4
LAB NUMBER:		27176005	27176006	27176007	27176008	27176009
DATE SAMPLED:		05/17/94	05/17/94	05/17/94	05/17/94	05/17/94
DATA ANALYZED:		05/23/94	05/23/94	05/23/94	05/23/94	05/23/94
DILUTION FACTOR:		1.0	1.0	1.0	1.0	1.0
	CRQL					
Acetonitrile	100	100 U	100 U	100 U	100 U	100 U
3-Chloropropene	5	5 U	5 U	5 U	5 U	5 U
Chloroprene	200	200 U	200 U	200 U	200 U	200 U
Propionitrile	100	100 U	100 U	100 U	100 U	100 U
Methacrylonitrile	5	5 U	5 U	5 U	5 U	5 U
Isobutyl alcohol	200	200 R	200 R	200 R	200 R	200 R
Methyl methacrylate	10	10 U	10 U	10 U	10 U	10 U
1,4-Dioxane	200	200 R	200 R	200 R	200 R	200 R
1,2-Dibromoethane	5	5 U	5 U	5 U	5 U	5 U
1,1,1,2-Tetrachloroethane	5	5 U	5 U	5 U	5 U	5 U
Pentachloroethane	10	10 U	10 U	10 U	10 U	10 U
1,3-Dichlorobenzene	5	5 U	5 U	5 U	5 U	5 U
1,4-Dichlorobenzene	5	5 U	5 U	5 U	5 U	5 U
1,2-Dichlorobenzene	5	5 U	5 U	5 U	5 U	5 U
1,2-Dibromo-3-chloropropane	10	10 U	10 U	10 U	10 U	10 U

PROJECT: NCBC GULFPORT, MISSISSIPPI — SEMIVOLATILE AQUEOUS ANALYSES (ug/l) — Validation Table

	SAMPLE LOCATION:	GPTHOGW-1	GPTHOGW-1D	GPTHOGW-1DR	GPTHOGW-2	GPTHOGW-3	GPTHOGW-4
	LAB NUMBER:	27176005	27176006	27176006R	27176007	27176008	27176009
	DATE SAMPLED:	05/17/94	05/17/94	05/17/94	05/17/94	05/17/94	05/17/94
	DATE ANALYZED:	05/26/94	05/26/94	06/03/94	06/03/94	06/03/94	06/03/94
	DILUTION FACTOR:	1.0	1.0	1.0	1.0	2.0	1.0
ANALYTE	CRQL						
N-Nitrosodimethylamine	10	10 U	10 R	10 U	10 U	20 U	10 U
Phenol	10	10 U	120 R	10 U	10 U	53	10 U
Aniline	10	10 U	10 R	10 U	10 U	20 U	10 U
bis (2-Chloroethyl) Ether	10	10 U	10 R	10 U	10 U	20 U	10 U
2- Chlorophenol	10	10 U	120 R	10 U	10 U	10 J	10 U
1,3- Dichlorobenzene	10	10 U	10 R	10 U	10 U	20 U	10 U
1,4- Dichlorobenzene	10	10 U	10 R	10 U	10 U	20 U	10 U
Benzyl alcohol	10	10 U	10 R	10 U	10 U	20 U	10 U
1,2- Dichlorobenzene	10	10 U	10 R	10 U	10 U	20 U	10 U
2- Methylphenol	10	10 U	10 R	10 U	10 U	20 U	10 U
bis(2-Chloroisopropyl)ether	10	10 U	10 R	10 U	10 U	20 U	10 U
4-Methylphenol	10	10 U	10 R	10 U	10 U	8 J	10 U
N-Nitroso-Di-n-Propylamine	10	10 U	10 R	10 U	10 U	20 U	10 U
Hexachloroethane	10	10 U	10 R	10 U	10 U	20 U	10 U
Nitrobenzene	10	10 U	10 R	10 U	10 U	20 U	10 U
Isophorone	10	10 U	10 R	10 U	10 U	20 U	10 U
2-Nitrophenol	10	10 U	10 R	10 U	10 U	20 U	10 U
2,4-Dimethylphenol	10	10 U	10 R	10 U	10 U	20 U	10 U
Benzoic acid	50	50 U	50 R	50 U	50 U	13 J	50 U
bis (2-Chloroethoxy) Methane	10	10 U	10 R	10 U	10 U	20 U	10 U
2,4-Dichlorophenol	10	10 U	10 R	10 U	10 U	8 J	10 U
1,2,4-Trichlorobenzene	10	10 U	10 R	10 U	10 U	20 U	10 U
Naphthalene	10	10 U	10 R	10 U	10 U	430	10 U
4-Chloroaniline	10	10 U	10 R	10 U	10 U	20 U	10 U
Hexachlorobutadiene	10	10 U	10 R	10 U	10 U	20 U	10 U
4-Chloro-3-Methylphenol	10	10 U	92 R	10 U	10 U	20 U	10 U
2-Methylnaphthalene	10	10 U	10 R	10 U	10 U	20 U	10 U
Hexachlorocyclopentadiene	10	10 U	10 R	10 U	10 U	20 U	10 U
2,4,6-Trichlorophenol	10	10 U	10 R	10 U	10 U	20 U	10 U
2,4,5-Trichlorophenol	50	50 U	50 R	50 U	50 U	8 J	50 U
2-Chloronaphthalene	10	10 U	10 R	10 U	10 U	20 U	10 U
2-Nitroaniline	50	50 U	50 R	50 U	50 U	100 U	50 U
Dimethylphthalate	10	10 U	10 R	10 U	10 U	20 U	10 U
Acenaphthylene	10	10 U	10 R	10 U	10 U	20 U	10 U
2,6-Dinitrotoluene	10	10 U	10 R	10 U	10 U	20 U	10 U
3-Nitroaniline	50	50 U	50 R	50 U	50 U	100 U	50 U
Acenaphthene	10	10 U	10 R	10 U	10 U	20 U	10 U
2,4-Dinitrophenol	50	50 U	50 R	50 U	50 U	100 U	50 U
4-Nitrophenol	50	50 U	110 R	50 U	50 U	100 U	50 U
Dibenzofuran	10	10 U	10 R	10 U	10 U	20 U	10 U
2,4-Dinitrotoluene	10	10 U	10 R	10 U	10 U	20 U	10 U
Diethylphthalate	10	10 U	10 R	10 U	10 U	20 U	10 U
4-Chlorophenyl-phenylether	10	10 U	10 R	10 U	10 U	20 U	10 U
Fluorene	10	10 U	10 R	10 U	10 U	20 U	10 U
4-Nitroaniline	50	50 U	50 R	50 U	50 U	100 U	50 U
4,6-Dinitro-2-Methylphenol	50	50 U	50 R	50 U	50 U	100 U	50 U
N-Nitrosodiphenylamine	10	10 U	3 R	10 U	10 U	20 U	10 U

PROJECT: NCBC GULFPORT, MISSISSIPPI — SEMIVOLATILE AQUEOUS ANALYSES (ug/l) — Validation Table

ANALYTE	CRQL	GPTHOGW-1	GPTHOGW-1D	GPTHOGW-1DR	GPTHOGW-2	GPTHOGW-3	GPTHOGW-4
SAMPLE LOCATION:		GPTHOGW-1	GPTHOGW-1D	GPTHOGW-1DR	GPTHOGW-2	GPTHOGW-3	GPTHOGW-4
LAB NUMBER:		27176005	27176006	27176006R	27176007	27176008	27176009
DATE SAMPLED:		05/17/94	05/17/94	05/17/94	05/17/94	05/17/94	05/17/94
DATE ANALYZED:		05/26/94	05/26/94	06/03/94	06/03/94	06/03/94	06/03/94
DILUTION FACTOR:		1.0	1.0	1.0	1.0	2.0	1.0
1,2-Diphenylhydrazine	10	10 U	10 R	10 U	10 U	20 U	10 U
4-Bromophenyl-phenylether	10	10 U	10 R	10 U	10 U	20 U	10 U
Hexachlorobenzene	10	10 U	10 R	10 U	10 U	20 U	10 U
Pentachlorophenol	50	50 U	120 R	50 U	50 U	100 U	50 U
Phenanthrene	10	10 U	10 R	10 U	10 U	20 U	10 U
Anthracene	10	10 U	10 R	10 U	10 U	20 U	10 U
Di-n-Butylphthalate	10	10 U	10 R	10 U	10 U	20 U	10 U
Fluoranthene	10	10 U	10 R	10 U	10 U	20 U	10 U
Benzidine	50	50 U	50 R	50 R	50 U	100 R	50 R
Pyrene	10	10 U	3 R	10 U	10 U	20 U	10 U
Butylbenzylphthalate	10	10 U	10 R	10 U	10 U	20 U	10 U
3,3'-Dichlorobenzidine	20	20 U	20 R	20 U	20 U	40 U	20 U
Benzo (a) Anthracene	10	10 U	10 R	10 U	10 U	20 U	10 U
Chrysene	10	10 U	10 R	10 U	10 U	20 U	10 U
bis (2-Ethylhexyl) Phthalate	10	10 U	10 R	10 U	10 U	38	10 U
Di-n-Octyl Phthalate	10	10 U	10 R	10 U	10 U	20 U	10 U
Benzo (b) Fluoranthene	10	10 U	10 R	10 U	10 U	20 U	10 U
Benzo (k) Fluoranthene	10	10 U	10 R	10 U	10 U	20 U	10 U
Benzo (a) Pyrene	10	10 U	10 R	10 U	10 U	20 U	10 U
Indeno (1,2,3-cd) Pyrene	10	10 U	10 R	10 U	10 U	20 U	10 U
Dibenz (a,h) Anthracene	10	10 U	10 R	10 U	10 U	20 U	10 U
Benzo (g,h,i) Perylene	10	10 U	10 R	10 U	10 U	20 U	10 U
2-Picoline	50	50 U	50 R	50 U	50 U	100 U	50 U
Methyl methanesulfonate	10	10 U	10 R	10 U	10 U	20 U	10 U
Ethyl Methansulfonate	10	10 U	10 R	10 U	10 U	20 U	10 U
Acetophenone	10	10 U	10 R	10 U	10 U	20 U	10 U
N-Nitrosopiperidine	10	10 U	10 R	10 U	10 U	20 U	10 U
Phenyl-tert-butlamine	50	50 U	50 R	50 U	50 U	100 U	50 U
2,6-Dichlorophenol	10	10 U	10 R	10 U	10 U	20 U	10 U
N-Nitrosodi-n-butylamine	10	10 U	10 R	10 U	10 U	20 U	10 U
1,2,4,5-Tetrachlorobenzene	50	50 U	50 R	50 U	50 U	100 U	50 U
Pentachlorobenzene	50	50 U	50 R	50 U	50 U	100 U	50 U
1-Naphthylamine	50	50 U	50 R	50 U	50 U	100 U	50 U
2-Naphthylamine	50	50 U	50 R	50 U	50 U	100 U	50 U
2,3,4,6-Tetrachlorophenol	10	10 U	10 R	10 U	10 U	20 U	10 U
Phenacetin	10	10 U	10 R	10 U	10 U	20 U	10 U
4-Aminobiphenyl	50	50 U	50 R	50 U	50 U	100 U	50 U
Pronamide	10	10 U	10 R	10 U	10 U	20 U	10 U
p-(Dimethylamino)azobenzene	10	10 U	10 R	10 U	10 U	20 U	10 U
7,12Dimethylbenz(a)anthracene	10	10 U	10 R	10 U	10 U	20 U	10 U
3-Methylcholanthrene	10	10 U	10 R	10 U	10 U	20 U	10 U
Pyridine	50	50 U	50 R	50 U	50 U	100 U	50 U
N-Nitrosomethylethylamine	10	10 U	10 R	10 U	10 U	20 U	10 U
N-Nitrosodiethylamine	10	10 U	10 R	10 U	10 U	20 U	10 U
N-Nitrosopyrrolidine	10	10 U	10 R	10 U	10 U	20 U	10 U
N-Nitrosomorpholine	10	10 U	10 R	10 U	10 U	20 U	10 U
o-Toluidine	10	10 U	10 R	10 U	10 U	20 U	10 U

PROJECT: NCBC GULFPORT, MISSISSIPPI

SEMIVOLATILE AQUEOUS ANALYSES (ug/l)

Validation Table

	SAMPLE LOCATION:	GPTHOGW-1	GPTHOGW-1D	GPTHOGW-1DR	GPTHOGW-2	GPTHOGW-3	GPTHOGW-4
	LAB NUMBER:	27176005	27176006	27176006R	27176007	27176008	27176009
	DATE SAMPLED:	05/17/94	05/17/94	05/17/94	05/17/94	05/17/94	05/17/94
	DATE ANALYZED:	05/26/94	05/26/94	06/03/94	06/03/94	06/03/94	06/03/94
	DILUTION FACTOR:	1.0	1.0	1.0	1.0	2.0	1.0
ANALYTE	CRQL						
Hexachloropropene	50	50 U	50 R	50 U	50 U	100 U	50 U
p-Phenylenediamine	50	500 U	500 R	500 U	500 U	1000 U	500 U
Safrole	50	50 U	50 R	50 U	50 U	100 U	50 U
Isosafrole	50	50 U	50 R	50 U	50 U	100 U	50 U
1,4-Napthoquinone	50	1000 U	1000 R	1000 U	1000 U	2000 U	1000 U
1,3-Dinitrobenzene	10	10 U	10 R	10 U	10 U	20 U	10 U
5-Nitro-o-toluidine	10	10 U	10 R	10 U	10 U	20 U	10 U
1,3,5-Trinitrobenzene	10	10 U	10 R	10 U	10 U	20 U	10 U
4-Nitroquinoline-1-oxide	10	500 U	500 R	500 U	500 U	1000 U	500 U
Methapyrilene	50	50 U	50 R	50 U	50 U	100 U	50 U
Aramite	50	50 U	50 R	50 U	50 U	100 U	50 U
3,3'-Dimethylbenzidine	10	10 U	10 R	10 U	10 U	20 UJ	10 UJ
Hexachlorophene	50	500 R	500 R	500 R	500 R	1000 R	500 R
2-Acetylaminofluorene	10	10 U	10 R	10 U	10 U	20 U	10 U
Pentachloronitrobenzene	50	50 U	50 R	50 U	50 U	100 U	50 U

PROJECT: NCBC GULFPORT, MISSISSIPPI — POLYNUCLEAR AROMATIC HYDROCARBONS AQUEOUS ANALYSES (ug/l) — Validation Table

SAMPLE LOCATION:	GPTHOGW-1	GPTHOGW-1RE	GPTHOGW-1D	GPTHOGW-1DRE	GPTHOGW-2	GPTHOGW-2RE	GPTHOGW-3
LAB NUMBER:	27176005	27176005-RE	27176006	27176006-RE	27176007	27176007-RE	27176008
DATE SAMPLED:	05/17/94	05/17/94	05/17/94	05/17/94	05/17/94	05/17/94	05/17/94
DATE ANALYZED:	05/31/94	06/01/94	05/31/94	06/01/94	05/31/94	06/01/94	05/31/94
ANALYTE							
Naphthalene	56 R	2.0 U	61 R	2.0 U	63 R	2.0 U	52 R
Acenaphthylene	69 R	2.0 U	66 R	2.0 U	72 R	2.0 U	59 R
Acenaphthene	70 R	2.0 U	71 R	2.0 U	74 R	2.0 U	66 R
Fluorene	77 R	1.0 U	74 R	1.0 U	77 R	1.0 U	72 R
Phenanthrene	91 R	1.0 U	87 R	1.0 U	90 R	1.0 U	86 R
Anthracene	61 R	0.20 U	58 R	0.20 U	61 R	0.20 U	86 R
Fluoranthene	8.5 R	0.20 U	7.9 R	0.20 U	8.3 R	0.20 U	7.9 R
Pyrene	9.2 R	2.0 U	8.5 R	2.0 U	8.7 R	2.0 U	8.2 R
Benzo(a)anthracene	8.4 R	0.20 U	7.5 R	0.20 U	8.1 R	0.20 U	7.6 R
Chrysene	8.4 R	2.0 U	7.2 R	2.0 U	7.9 R	2.0 U	8.4 R
Benzo(b)fluoranthene	8.5 R	0.10 U	7.6 R	0.10 U	8.1 R	0.10 U	7.7 R
Benzo(k)fluoranthene	4.0 R	0.10 U	3.6 R	0.10 U	3.9 R	0.10 U	3.6 R
Benzo(a)pyrene	8.3 R	0.10 U	7.7 R	0.10 U	8.1 R	0.10 U	7.3 R
Dibenzo(a,h)anthracene	9.6 R	0.20 U	8.9 R	0.20 U	9.6 R	0.20 U	9.2 R
Indeno(1,2,3-cd)pyrene	10 R	0.20 U	9.6 R	0.20 U	10 R	0.20 U	9.7 R
Benzo(g,h,i)perylene	8.7 R	0.20 U	8.0 R	0.20 U	8.6 R	0.20 U	8.1 R

PROJECT: NCBC GULFPORT, MISSISSIPPI

POLYNUCLEAR AROMATIC HYDROCARBONS AQUEOUS ANALYSES (ug/l)

Validation Table

SAMPLE LOCATION:	GPTHOGW-3RE	GPTHOGW-4	GPTHOGW-4RE
LAB NUMBER:	27176008-RE	27176009	27176009-RE
DATE SAMPLED:	05/17/94	05/17/94	05/17/94
DATE ANALYZED:	06/01/94	05/31/94	06/01/94
ANALYTE			
Naphthalene	2.0 U	60 R	2.0 U
Acenaphthylene	2.0 U	68 R	2.0 U
Acenaphthene	2.0 U	69 R	2.0 U
Fluorene	1.0 U	75 R	1.0 U
Phenanthrene	1.0 U	89 R	1.0 U
Anthracene	0.20 U	60 R	0.20 U
Fluoranthene	0.20 U	8.3 R	0.20 U
Pyrene	2.0 U	8.8 R	2.0 U
Benzo(a)anthracene	0.20 U	8.2 R	0.20 U
Chrysene	2.0 U	8.6 R	2.0 U
Benzo(b)fluoranthene	0.10 U	8.0 R	0.10 U
Benzo(k)fluoranthene	0.10 U	3.8 R	0.10 U
Benzo(a)pyrene	0.10 U	8.0 R	0.10 U
Dibenzo(a,h)anthracene	0.20 U	9.2 R	0.20 U
Indeno(1,2,3-cd)pyrene	0.20 U	10 R	0.20 U
Benzo(g,h,i)perylene	0.20 U	8.4 R	0.20 U

PROJECT: NCBC GULFPORT, MISSISSIPPI — PESTICIDE/PCB AQUEOUS ANALYSES (ug/l) — Validation Table

	SAMPLE LOCATION:	GPTHOGW-1	GPTHOGW-1D	GPTHOGW-2	GPTHOGW-3	GPTHOGW-4
	LAB NUMBER:	27176005	27176006	27176007	27176008	27176009
	DATE SAMPLED:	05/17/94	05/17/94	05/17/94	05/17/94	05/17/94
	DATE ANALYZED:	05/26/94	05/26/94	05/26/94	05/27/94	05/27/94
	DILUTION:	1.0	1.0	1.0	1.0	1.0
ANALYTE	PQL					
alpha-BHC	0.05	0.020 U	0.020 U	0.020 U	0.020 U	0.020 U
beta-BHC	0.05	0.040 U	0.040 U	0.040 U	0.040 U	0.040 U
delta-BHC	0.05	0.020 U	0.020 U	0.020 U	0.020 U	0.020 U
gamma-BHC (Lindane)	0.05	0.020 U	0.020 U	0.020 U	0.020 U	0.020 U
Heptachlor	0.05	0.020 U	0.020 U	0.020 U	0.020 U	0.020 U
Aldrin	0.05	0.020 U	0.020 U	0.020 U	0.020 U	0.020 U
Heptachlor Epoxide	0.05	0.020 U	0.020 U	0.020 U	0.020 U	0.020 U
Endosulfan I	0.10	0.020 U	0.020 U	0.020 U	0.020 U	0.020 U
Dieldrin	0.10	0.020 U	0.020 U	0.020 U	0.020 U	0.020 U
4,4'- DDE	0.10	0.040 U	0.040 U	0.040 U	0.040 U	0.040 U
Endrin	0.10	0.040 U	0.040 U	0.040 U	0.040 U	0.040 U
Endosulfan II	0.10	0.040 U	0.040 U	0.040 U	0.040 U	0.040 U
4,4'- DDD	0.10	0.040 U	0.040 U	0.040 U	0.040 U	0.040 U
Endrin Aldehyde	0.10	0.040 U	0.040 U	0.040 U	0.040 U	0.040 U
Endosulfan Sulfate	0.10	0.040 U	0.040 U	0.040 U	0.040 U	0.040 U
4,4'- DDT	0.10	0.040 U	0.040 U	0.040 U	0.040 U	0.040 U
Methoxychlor	0.50	0.080 U	0.080 U	0.080 U	0.080 U	0.080 U
Endrin Ketone	0.10	0.040 U	0.040 U	0.040 U	0.040 U	0.040 U
Chlordane	0.5	0.20 U	0.20 U	0.20 U	0.20 U	0.20 U
Toxaphene	1.0	1.0 U	1.0 U	1.0 U	1.0 U	1.0 U
Aroclor-1016	0.8	1.0 U	1.0 U	1.0 U	1.0 U	1.0 U
Aroclor-1221	2.0	2.0 U	2.0 U	2.0 U	2.0 U	2.0 U
Aroclor-1232	2.0	2.0 U	2.0 U	2.0 U	2.0 U	2.0 U
Aroclor-1242	0.8	1.0 U	1.0 U	1.0 U	1.0 U	1.0 U
Aroclor-1248	0.5	1.0 U	1.0 U	1.0 U	1.0 U	1.0 U
Aroclor-1254	1.0	0.50 U	0.50 U	0.50 U	0.50 U	0.50 U
Aroclor-1260	1.0	0.50 U	0.50 U	0.50 U	0.50 U	0.50 U
Chlorobenzilate	0.50	0.50 U	0.50 U	0.50 U	0.50 U	0.50 U
Diallate	1.0	1.0 U	1.0 U	1.0 U	1.0 U	1.0 U
Isodrin	0.02	0.020 U	0.020 U	0.020 U	0.020 U	0.020 U
Kepone	1.0	1.0 U	1.0 U	1.0 U	1.0 U	1.0 U

PROJECT: NCBC GULFPORT, MISSISSIPPI — ORGANOPHOSPHORUS PESTICIDE AQUEOUS ANALYSIS (ug/l) — Validation Table

	SAMPLE LOCATION:	GPTHOGW-1	GPTHOGW-1D	GPTHOGW-2	GPTHOGW-3	GPTHOGW-4
	LAB NUMBER:	27176005	27176006	27176007	27176008	27176009
	DATE SAMPLED:	05/17/94	05/17/94	05/17/94	05/17/94	05/17/94
	DATE ANALYZED:	06/01/94	06/01/94	06/01/94	06/01/94	06/01/94
ANALYTE	PQL					
Triethylphosphorothioate	1.0	1.0 U	1.0 U	1.0 U	1.0 U	1.0 U
Thionazin	1.0	1.0 U	1.0 U	1.0 U	1.0 U	1.0 U
Phorate	1.0	1.0 U	1.0 U	1.0 U	1.0 U	1.0 U
Sulfotepp	1.0	1.0 U	1.0 U	1.0 U	1.0 U	1.0 U
Dimethoate	5.0	2.0 U	2.0 U	2.0 U	2.0 U	2.0 U
Disulfoton	1.0	1.0 U	1.0 U	1.0 U	1.0 U	1.0 U
Methyl Parathion	1.0	1.0 U	1.0 U	1.0 U	1.0 U	1.0 U
Ethyl Parathion	1.0	1.0 U	1.0 U	1.0 U	1.0 U	1.0 U
Famphur	1.0	1.0 U	1.0 U	1.0 U	1.0 U	1.0 U

PROJECT: NCBC GULFPORT, MISSISSIPPI — HERBICIDE AQUEOUS ANALYSES (ug/l) — Validation Table

	SAMPLE LOCATION:	GPTHOGW-1	GPTHOGW-1D	GPTHOGW-2	GPTHOGW-3	GPTHOGW-4
	LAB NUMBER:	27176005	27176006	27176007	27176008	27176009
	DATE SAMPLED:	05/17/94	05/17/94	05/17/94	05/17/94	05/17/94
	DATE ANALYZED:	05/24/94	05/24/94	05/24/94	05/24/94	05/24/94
ANALYTE	PQL					
2,4-D	2.5	2.5 U	2.5 U	2.5 U	2.5 U	2.5 U
2,4,5-T	0.5	0.5 U	0.5 U	1.5	2.7	0.5 U
2,4,5-TP	0.5	0.5 U	0.5 U	0.5 U	0.5 U	0.5 U
Dinoseb	2.5	0.5 U	0.5 U	0.5 U	0.5 U	0.5 U

PROJECT: NCBC GULFPORT, MISSISSIPPI — DIOXIN/FURANS AQUEOUS ANALYSES (pg/l) — Validation Table

	SAMPLE LOCATION:	GPTHOGW-1	GPTHOGW-1D	GPTHOGW-2	GPTHOGW-3	GPTHOGW-4
	LAB NUMBER:	9405219-04	9405219-07	9405219-08	9405219-09	9405219-10
	DATE SAMPLED:	05/17/94	05/17/94	05/17/94	05/17/94	05/17/94
	DATE ANALYZED:	05/28/94	05/28/94	05/28/94	05/28/94	05/28/94
ANALYTE						
2,3,7,8-TCDD		0.26 U	0.43 U	13.8 U	0.40 U	0.24 U
2,3,7,8-TCDF		0.18 U	0.24 U	2.35 U	0.23 U	0.21 U
1,2,3,7,8-PeCDD		0.50 U	0.79 UJ	1.63 U	0.41 U	0.48 UJ
1,2,3,7,8-PeCDF		0.16 U	0.29 U	2.07 UJ	0.23 U	0.22 U
2,3,4,7,8-PeCDF		0.20 U	0.30 UJ	1.49 U	0.19 U	0.22 U
1,2,3,4,7,8-HxCDD		0.34 U	0.62 U	1.40 U	0.28 U	0.31 U
1,2,3,6,7,8-HxCDD		0.28 U	0.54 U	1.98 U	0.35 U	0.34 U
1,2,3,7,8,9-HxCDD		0.34 U	0.47 U	2.30 U	0.43 U	0.27 U
1,2,3,4,7,8-HxCDF		0.18 U	0.42 U	0.69 U	0.17 U	4.30 (MPC)
1,2,3,6,7,8-HxCDF		0.16 U	0.47 U	0.77 U	0.19 U	0.16 U
2,3,4,6,7,8-HxCDF		0.23 U	0.34 U	1.81 U	0.15 U	0.19 U
1,2,3,7,8,9-HxCDF		0.30 U	0.38 U	1.16 U	0.40 U	0.23 U
1,2,3,4,6,7,8-HpCDD		0.55 U	2.25 U	2.36 U	2.05 U	7.28 (MPC)
1,2,3,4,6,7,8-HpCDF		0.39 U	0.27 U	0.45 U	0.43 U	0.32 U
1,2,3,4,7,8,9-HpCDF		0.33 U	0.47 U	1.31 U	0.26 U	0.30 U
OCDD		133	215 (MPC)	215	116	59.6
OCDF		0.72 U	1.10 U	5.44 U	1.15 U	0.51 U

PROJECT: NCBC GULFPORT, MISSISSIPPI — INORGANIC AQUEOUS ANALYSES (ug/l) — Validation Table

ANALYTE	CRQL	GPTHOGW-1	GPTHOGW-1D	GPTHOGW-2	GPTHOGW-3	GPTHOGW-4
SAMPLE LOCATION:		GPTHOGW-1	GPTHOGW-1D	GPTHOGW-2	GPTHOGW-3	GPTHOGW-4
LAB NUMBER:		M2717605	M2717606	M2717607	M2717608	M2717609
DATE SAMPLED:		05/17/94	05/17/94	05/17/94	05/17/94	05/17/94
Antimony	60	15.7 U	15.7 U	15.7 U	15.7 U	15.7 U
Arsenic	10	19.2 J	26.9 J	9.2 J	35.4 J	12.7 J
Barium	200	166 J	198 J	123 J	174 J	238
Beryllium	5	1.2 J	1.7 J	1.2 J	5.5	1.4 J
Cadmium	5	2.7 U	2.7 U	2.7 U	2.7 U	2.7 U
Chromium	10	26.6	56.3	30.7	83.5	81.0
Cobalt	50	12.1 J	22.2 J	5.2 J	30.1 J	12.9 J
Copper	25	24.1 U	24.1 U	23.4 U	24.1 U	24.1 U
Lead	3	19.8 J	25.5 J	14.3 J	28.4 J	36.8 J
Mercury	0.2	0.10 J	0.08 U	0.24	0.51	0.50
Nickel	40	37.0 J	52.5	23.0 J	79.2	35.0 J
Selenium	5	0.79 UJ	0.83 J	1.4 J	8.4 J	13.9 J
Silver	10	3.4 J	2.7 U	2.7 U	2.7 U	2.7 U
Thallium	10	1.1 UJ	1.1 UJ	1.1 UJ	1.1 UJ	1.1 UJ
Vanadium	50	49.1 J	74.7	42.6 J	153	122
Zinc	20	87.9	93.3	42.9	41.1	24.9
Tin	200	9.5 U	9.5 U	9.5 U	9.5 U	9.5 U
Cyanide	10	0.81 UJ	0.81 UJ	1.0 J	255 J	51.2 J
Sulfide	100	1.0	1.7	<0.1	9.3	9.2

Validated Quality Assurance and Quality Control Results

PROJECT: NCBC GULFPORT, MISSISSIPPI — VOLATILE AQUEOUS ANALYSES (ug/l) — Validation Table

ANALYTE	CRQL	BS-01-DI	BS-01-PI	BS-01-RI	BS-01-TB
SAMPLE LOCATION:		BS-01-DI	BS-01-PI	BS-01-RI	BS-01-TB
LAB NUMBER:		27176001	27176002	27176003	27176004
DATE SAMPLED:		05/17/94	05/17/94	05/17/94	05/17/94
DATA ANALYZED:		05/23/94	05/23/94	05/23/94	05/23/94
DILUTION FACTOR:		1.0	1.0	1.0	1.0
Chloromethane	10	10 U	10 U	10 U	10 U
Bromomethane	10	10 U	10 U	10 U	10 U
Vinyl Chloride	10	10 U	10 U	10 U	10 U
Chloroethane	10	10 U	10 U	10 U	10 U
Methylene Chloride	5	5 U	10 U	2 J	1 J
Acetone	10	38	7 J	14	8 J
Carbon Disulfide	5	5 U	5 U	5 U	5 U
1,1-Dichloroethene	5	5 U	5 U	5 U	5 U
1,1-Dichloroethane	5	5 U	5 U	5 U	5 U
1,2-Dichloroethene (total)	5	5 U	5 U	5 U	5 U
Chloroform	5	5 U	1 J	5 U	5 U
1,2-Dichloroethane	5	5 U	5 U	5 U	5 U
2-Butanone	10	10 U	10 U	10 U	10 U
1,1,1-Trichloroethane	5	5 U	5 U	5 U	5 U
Carbon Tetrachloride	5	5 U	5 U	5 U	5 U
Bromodichloromethane	5	5 U	5 U	5 U	5 U
1,2-Dichloropropane	5	5 U	5 U	5 U	5 U
cis-1,3-Dichloropropene	5	5 U	5 U	5 U	5 U
Trichloroethene	5	5 U	5 U	5 U	5 U
Dibromochloromethane	5	5 U	5 U	5 U	5 U
1,1,2-Trichloroethane	5	5 U	5 U	5 U	5 U
Benzene	5	5 U	5 U	5 U	5 U
trans-1,3-Dichloropropene	5	5 U	5 U	5 U	5 U
Bromoform	5	5 U	5 U	5 U	5 U
4-Methyl-2-Pentanone	10	10 U	10 U	10 U	10 U
2-Hexanone	10	10 U	10 U	10 U	10 U
Tetrachloroethene	5	5 U	5 U	5 U	5 U
1,1,2,2-Tetrachloroethane	5	5 U	5 U	5 U	5 U
Toluene	5	5 U	5 U	5 U	5 U
Chlorobenzene	5	5 U	5 U	5 U	5 U
Ethylbenzene	5	5 U	5 U	5 U	5 U
Styrene	5	5 U	5 U	5 U	5 U
Xylene (total)	5	5 U	5 U	5 U	5 U
Dichlorodifluoromethane	10	10 U	10 U	10 U	10 U
Trichlorofluoromethane	5	5 U	5 U	5 U	5 U
Acrolein	100	100 U	100 U	100 U	100 U
Iodomethane	10	10 U	10 U	10 U	10 U
Acrylonitrile	100	100 U	100 U	100 U	100 U
Vinyl acetate	10	10 U	10 U	10 U	10 U
Dibromomethane	5	5 U	5 U	5 U	5 U
2-Chloroethyl vinyl ether	10	10 U	10 U	10 U	10 U
Ethyl methacrylate	5	5 U	5 U	5 U	5 U
1,2,3-Trichloropropene	5	5 U	5 U	5 U	5 U
trans-1,4-Dichloro-2-butene	5	5 U	5 U	5 U	5 U

PROJECT: NCBC GULFPORT, MISSISSIPPI — VOLATILE AQUEOUS ANALYSES (ug/l) — Validation Table

SAMPLE LOCATION:		BS-01-DI	BS-01-PI	BS-01-RI	BS-01-TB
LAB NUMBER:		27176001	27176002	27176003	27176004
DATE SAMPLED:		05/17/94	05/17/94	05/17/94	05/17/94
DATA ANALYZED:		05/23/94	05/23/94	05/23/94	05/23/94
DILUTION FACTOR:		1.0	1.0	1.0	1.0
	CRQL				
Acetonitrile	100	34 J	100 U	100 U	100 U
3-Chloropropene	5	5 U	5 U	5 U	5 U
Chloroprene	200	200 U	200 U	200 U	200 U
Propionitrile	100	100 U	100 U	100 U	100 U
Methacrylonitrile	5	5 U	5 U	5 U	5 U
Isobutyl alcohol	200	200 R	200 R	200 R	200 R
Methyl methacrylate	10	10 U	10 U	10 U	10 U
1,4-Dioxane	200	200 R	200 R	200 R	200 R
1,2-Dibromoethane	5	5 U	5 U	5 U	5 U
1,1,1,2-Tetrachloroethane	5	5 U	5 U	5 U	5 U
Pentachloroethane	10	10 U	10 U	10 U	10 U
1,3-Dichlorobenzene	5	5 U	5 U	5 U	5 U
1,4-Dichlorobenzene	5	5 U	5 U	5 U	5 U
1,2-Dichlorobenzene	5	5 U	5 U	5 U	5 U
1,2-Dibromo-3-chloropropane	10	10 U	10 U	10 U	10 U

PROJECT: NCBC GULFPORT, MISSISSIPPI

SEMIVOLATILE AQUEOUS ANALYSES (ug/l)

Validation Table

	SAMPLE LOCATION:	BS-01-DI	BS-01-PI	BS-01-PIRE	BS-01-RI
	LAB NUMBER:	27176001	27176002	27176002RE	27176003
	DATE SAMPLED:	05/17/94	05/17/94	05/17/94	05/17/94
	DATE ANALYZED:	05/26/94	05/26/94	06/06/94	05/26/94
	DILUTION FACTOR:	1.0	1.0	1.0	1.0
ANALYTE	CRQL				
N-Nitrosodimethylamine	10	10 U	10 U	10 R	10 U
Phenol	10	10 U	10 R	10 R	10 U
Aniline	10	10 U	10 U	10 R	10 U
bis (2-Chloroethyl) Ether	10	10 U	10 U	10 R	10 U
2- Chlorophenol	10	10 U	10 U	10 R	10 U
1,3- Dichlorobenzene	10	10 U	10 U	10 R	10 U
1,4- Dichlorobenzene	10	10 U	10 U	10 R	10 U
Benzyl alcohol	10	10 U	10 R	10 R	10 U
1,2- Dichlorobenzene	10	10 U	10 U	10 R	10 U
2- Methylphenol	10	10 U	10 R	10 R	10 U
bis(2-Chloroisopropyl)ether	10	10 U	10 U	10 R	10 U
4-Methylphenol	10	10 U	10 U	10 R	10 U
N-Nitroso-Di-n-Propylamine	10	10 U	10 U	10 R	10 U
Hexachloroethane	10	10 U	10 U	10 R	10 U
Nitrobenzene	10	10 U	10 U	10 R	10 U
Isophorone	10	10 U	10 U	10 R	10 U
2-Nitrophenol	10	10 U	10 R	10 R	10 U
2,4-Dimethylphenol	10	10 U	10 R	10 R	10 U
Benzoic acid	50	50 U	50 R	50 R	50 U
bis (2-Chloroethoxy) Methane	10	10 U	10 U	10 R	10 U
2,4-Dichlorophenol	10	10 U	10 R	10 R	10 U
1,2,4-Trichlorobenzene	10	10 U	10 U	10 R	10 U
Naphthalene	10	10 U	10 U	10 R	10 U
4-Chloroaniline	10	10 U	10 U	10 R	10 U
Hexachlorobutadiene	10	10 U	10 U	10 R	10 U
4-Chloro-3-Methylphenol	10	10 U	10 U	10 R	10 U
2-Methylnaphthalene	10	10 U	10 U	10 R	10 U
Hexachlorocyclopentadiene	10	10 U	10 U	10 R	10 U
2,4,6-Trichlorophenol	10	10 U	10 R	10 R	10 U
2,4,5-Trichlorophenol	50	50 U	50 R	50 R	50 U
2-Chloronaphthalene	10	10 U	10 U	10 R	10 U
2-Nitroaniline	50	50 U	50 U	50 R	50 U
Dimethylphthalate	10	10 U	10 U	10 R	10 U
Acenaphthylene	10	10 U	10 U	10 R	10 U
2,6-Dinitrotoluene	10	10 U	10 U	10 R	10 U
3-Nitroaniline	50	50 U	50 U	50 R	50 U
Acenaphthene	10	10 U	10 U	10 R	10 U
2,4-Dinitrophenol	50	50 U	50 R	50 R	50 U
4-Nitrophenol	50	50 U	50 R	50 R	50 U
Dibenzofuran	10	10 U	10 U	10 R	10 U
2,4-Dinitrotoluene	10	10 U	10 U	10 R	10 U
Diethylphthalate	10	10 U	10 U	10 R	10 U
4-Chlorophenyl-phenylether	10	10 U	10 U	10 R	10 U
Fluorene	10	10 U	10 U	10 R	10 U
4-Nitroaniline	50	50 U	50 U	50 R	50 U
4,6-Dinitro-2-Methylphenol	50	50 U	50 R	50 R	50 U
N-Nitrosodiphenylamine	10	10 U	2 J	2 R	10 U

PROJECT: NCBC GULFPORT, MISSISSIPPI

SEMIVOLATILE AQUEOUS ANALYSES (ug/l)

	SAMPLE LOCATION:	BS-01-DI	BS-01-PI	BS-01-PIRE	BS-01-RI
	LAB NUMBER:	27176001	27176002	27176002RE	27176003
	DATE SAMPLED:	05/17/94	05/17/94	05/17/94	05/17/94
	DATE ANALYZED:	05/26/94	05/26/94	06/06/94	05/26/94
	DILUTION FACTOR:	1.0	1.0	1.0	1.0
ANALYTE	CRQL				
1,2-Diphenylhydrazine	10	10 U	10 U	10 R	10 U
4-Bromophenyl-phenylether	10	10 U	10 U	10 R	10 U
Hexachlorobenzene	10	10 U	10 U	10 R	10 U
Pentachlorophenol	50	50 U	50 R	50 R	50 U
Phenanthrene	10	10 U	10 U	10 R	10 U
Anthracene	10	10 U	10 U	10 R	10 U
Di-n-Butylphthalate	10	10 U	10 U	10 R	10 U
Fluoranthene	10	10 U	10 U	10 R	10 U
Benzidine	50	50 U	50 U	50 R	50 U
Pyrene	10	10 U	10 U	10 R	10 U
Butylbenzylphthalate	10	10 U	10 U	10 R	10 U
3,3'-Dichlorobenzidine	20	20 U	20 U	20 R	20 U
Benzo (a) Anthracene	10	10 U	10 U	10 R	10 U
Chrysene	10	10 U	10 U	10 R	10 U
bis (2-Ethylhexyl) Phthalate	10	10 U	10 U	10 R	10 U
Di-n-Octyl Phthalate	10	10 U	10 U	10 R	10 U
Benzo (b) Fluoranthene	10	10 U	10 U	10 R	10 U
Benzo (k) Fluoranthene	10	10 U	10 U	10 R	10 U
Benzo (a) Pyrene	10	10 U	10 U	10 R	10 U
Indeno (1,2,3-cd) Pyrene	10	10 U	10 U	10 R	10 U
Dibenz (a,h) Anthracene	10	10 U	10 U	10 R	10 U
Benzo (g,h,i) Perylene	10	10 U	10 U	10 R	10 U
2-Picoline	50	50 U	50 U	50 R	50 U
Methyl methanesulfonate	10	10 U	10 U	10 R	10 U
Ethyl Methansulfonate	10	10 U	10 U	10 R	10 U
Acetophenone	10	10 U	10 U	10 R	10 U
N-Nitrosopiperidine	10	10 U	10 U	10 R	10 U
Phenyl-tert-butlamine	50	50 U	50 U	50 R	50 U
2,6-Dichlorophenol	10	10 U	10 U	10 R	10 U
N-Nitrosodi-n-butylamine	10	10 U	10 U	10 R	10 U
1,2,4,5-Tetrachlorobenzene	50	50 U	50 U	50 R	50 U
Pentachlorobenzene	50	50 U	50 U	50 R	50 U
1-Naphthylamine	50	50 U	50 U	50 R	50 U
2-Naphthylamine	50	50 U	50 U	50 R	50 U
2,3,4,6-Tetrachlorophenol	10	10 U	10 U	10 R	10 U
Phenacetin	10	10 U	10 U	10 R	10 U
4-Aminobiphenyl	50	50 U	50 U	50 R	50 U
Pronamide	10	10 U	10 U	10 R	10 U
p-(Dimethylamino)azobenzene	10	10 U	10 U	10 R	10 U
7,12Dimethylbenz(a)anthracene	10	10 U	10 U	10 R	10 U
3-Methylcholanthrene	10	10 U	10 U	10 R	10 U
Pyridine	50	50 U	50 U	50 R	50 U
N-Nitrosomethylethylamine	10	10 U	10 U	10 R	10 U
N-Nitrosodiethylamine	10	10 U	10 U	10 R	10 U
N-Nitrosopyrrolidine	10	10 U	10 U	10 R	10 U
N-Nitrosomorpholine	10	10 U	10 U	10 R	10 U
o-Toluidine	10	10 U	10 U	10 R	10 U

PROJECT: NCBC GULFPORT, MISSISSIPPI

SEMIVOLATILE AQUEOUS ANALYSES (ug/l)

	SAMPLE LOCATION:	BS-01-DI	BS-01-PI	BS-01-PIRE	BS-01-RI
	LAB NUMBER:	27176001	27176002	27176002RE	27176003
	DATE SAMPLED:	05/17/94	05/17/94	05/17/94	05/17/94
	DATE ANALYZED:	05/26/94	05/26/94	06/06/94	05/26/94
	DILUTION FACTOR:	1.0	1.0	1.0	1.0
ANALYTE	CRQL				
Hexachloropropene	50	50 U	50 U	50 R	50 U
p-Phenylenediamine	50	500 U	500 U	500 R	500 U
Safrole	50	50 U	50 U	50 R	50 U
Isosafrole	50	50 U	50 U	50 R	50 U
1,4-Napthoquinone	50	1000 U	1000 U	1000 R	1000 U
1,3-Dinitrobenzene	10	10 U	10 U	10 R	10 U
5-Nirtro-o-toluidine	10	10 U	10 U	10 R	10 U
1,3,5-Trinitrobenzene	10	10 U	10 U	10 R	10 U
4-Nitroquinoline-1-oxide	10	500 U	500 U	500 R	500 U
Methapyrilene	50	50 U	50 U	50 R	50 U
Aramite	50	50 U	50 U	50 R	50 U
3,3'-Dimethylbenzidine	10	10 U	10 U	10 R	10 U
Hexachlorophene	50	500 R	500 R	500 R	500 R
2-Acetylaminofluorene	10	10 U	10 U	10 R	10 U
Pentachloronitrobenzene	50	50 U	50 U	50 R	50 U

PROJECT: NCBC GULFPORT, MISSISSIPPI — POLYNUCLEAR AROMATIC HYDROCARBONS AQUEOUS ANALYSES (ug/l) — Validation Table

SAMPLE LOCATION:	BS-01-DI	BS-01-DIRE	BS-01-PI	BS-01-PIRE	BS-01-RI	BS-01-RIRE
LAB NUMBER:	27176001	27176001-RE	27176002	27176002-RE	27176003	27176003-RE
DATE SAMPLED:	05/17/94	05/17/94	05/17/94	05/17/94	05/17/94	05/17/94
DATE ANALYZED:	05/31/94	06/01/94	05/31/94	06/01/94	05/31/94	06/01/94
ANALYTE						
Naphthalene	65 R	2.0 U	59 R	2.0 U	56 R	2.0 U
Acenaphthylene	73 R	2.0 U	63 R	2.0 U	68 R	2.0 U
Acenaphthene	75 R	2.0 U	70 R	2.0 U	69 R	2.0 U
Fluorene	79 R	1.0 U	75 R	1.0 U	74 R	1.0 U
Phenanthrene	93 R	1.0 U	90 R	1.0 U	87 R	1.0 U
Anthracene	63 R	0.20 U	50 R	0.20 U	60 R	0.20 U
Fluoranthene	8.8 R	0.20 U	8.5 R	0.20 U	8.3 R	0.20 U
Pyrene	9.6 R	2.0 U	8.9 R	2.0 U	8.9 R	2.0 U
Benzo(a)anthracene	9.0 R	0.20 U	8.4 R	0.20 U	8.7 R	0.20 U
Chrysene	8.8 R	2.0 U	9.4 R	2.0 U	8.7 R	2.0 U
Benzo(b)fluoranthene	9.1 R	0.10 U	9.2 R	0.10 U	8.9 R	0.10 U
Benzo(k)fluoranthene	4.3 R	0.10 U	4.3 R	0.10 U	4.2 R	0.10 U
Benzo(a)pyrene	9.3 R	0.10 U	0.83 R	0.10 U	8.9 R	0.10 U
Dibenzo(a,h)anthracene	10 R	0.20 U	9.8 R	0.20 U	9.6 R	0.20 U
Indeno(1,2,3-cd)pyrene	11 R	0.20 U	11 R	0.20 U	11 R	0.20 U
Benzo(g,h,i)perylene	9.1 R	0.20 U	8.6 R	0.20 U	8.7 R	0.20 U

PROJECT: NCBC GULFPORT, MISSISSIPPI — PESTICIDE/PCB AQUEOUS ANALYSES (ug/l) — Validation Table

	SAMPLE LOCATION:	BS-01-DI	BS-01-PI	BS-01-RI
	LAB NUMBER:	27176001	27176002	37909003
	DATE SAMPLED:	05/17/94	05/17/94	04/19/94
	DATE ANALYZED:	05/26/94	05/26/94	04/26/94
	DILUTION:	1.0	2.0	1.0
ANALYTE	PQL			
alpha-BHC	0.05	0.020 U	0.040 U	0.020 U
beta-BHC	0.05	0.040 U	0.080 U	0.040 U
delta-BHC	0.05	0.020 U	0.040 U	0.020 U
gamma-BHC (Lindane)	0.05	0.020 U	0.040 U	0.020 U
Heptachlor	0.05	0.020 U	0.040 U	0.020 U
Aldrin	0.05	0.020 U	0.040 U	0.020 U
Heptachlor Epoxide	0.05	0.020 U	0.040 U	0.020 U
Endosulfan I	0.10	0.020 U	0.040 U	0.020 U
Dieldrin	0.10	0.020 U	0.040 U	0.020 U
4,4'- DDE	0.10	0.040 U	0.040 U	0.040 U
Endrin	0.10	0.040 U	0.080 U	0.040 U
Endosulfan II	0.10	0.040 U	0.080 U	0.040 U
4,4'- DDD	0.10	0.040 U	0.080 U	0.040 U
Endrin Aldehyde	0.10	0.040 U	0.080 U	0.040 U
Endosulfan Sulfate	0.10	0.040 U	0.080 U	0.040 U
4,4'- DDT	0.10	0.040 U	0.61	0.040 U
Methoxychlor	0.50	0.080 U	0.16 U	0.080 U
Endrin Ketone	0.10	0.040 U	0.080 U	0.040 U
Chlordane	0.5	0.20 U	0.40 U	0.20 U
Toxaphene	1.0	1.0 U	2.0 U	1.0 U
Aroclor-1016	0.8	1.0 U	2.0 U	1.0 U
Aroclor-1221	2.0	2.0 U	4.0 U	2.0 U
Aroclor-1232	2.0	2.0 U	4.0 U	2.0 U
Aroclor-1242	0.8	1.0 U	2.0 U	1.0 U
Aroclor-1248	0.5	1.0 U	2.0 U	1.0 U
Aroclor-1254	1.0	0.50 U	1.0 U	0.50 U
Aroclor-1260	1.0	0.50 U	1.0 U	0.50 U
Chlorobenzilate	0.50	0.50 U	1.0 U	0.50 U
Diallate	1.0	1.0 U	2.0 U	1.0 U
Isodrin	0.02	0.020 U	0.040 U	0.020 U
Kepone	1.0	1.0 U	1.0 U	1.0 U

PROJECT: NCBC GULFPORT, MISSISSIPPI — ORGANOPHOSPHORUS PESTICIDE AQUEOUS ANALYSIS (ug/l) — Validation Table

	SAMPLE LOCATION:	BS-01-DI	BS-01-PI	BS-01-PIRE	BS-01-RI
	LAB NUMBER:	27176001	27176002	27176002RE	27176003
	DATE SAMPLED:	05/17/94	05/17/94	05/17/94	05/17/94
	DATE ANALYZED:	06/01/94	06/01/94	06/02/94	06/01/94
ANALYTE	PQL				
Triethylphosphorothioate	1.0	1.0 U	1.0 UJ	1.0 UJ	1.0 U
Thionazin	1.0	1.0 U	1.0 UJ	1.0 UJ	1.0 U
Phorate	1.0	1.0 U	1.0 UJ	1.0 UJ	1.0 U
Sulfotepp	1.0	1.0 U	1.0 UJ	1.0 UJ	1.0 U
Dimethoate	5.0	2.0 U	2.0 UJ	2.0 UJ	2.0 U
Disulfoton	1.0	1.0 U	1.0 UJ	1.0 UJ	1.0 U
Methyl Parathion	1.0	1.0 U	1.0 UJ	1.0 UJ	1.0 U
Ethyl Parathion	1.0	1.0 U	1.0 UJ	1.0 UJ	1.0 U
Famphur	1.0	1.0 U	1.0 UJ	1.0 UJ	1.0 U

PROJECT: NCBC GULFPORT, MISSISSIPPI — HERBICIDE AQUEOUS ANALYSES (ug/l) — Validation Table

	SAMPLE LOCATION:	BS-01-DI	BS-01-PI	BS-01-RI
	LAB NUMBER:	27176001	27176002	27176003
	DATE SAMPLED:	05/17/94	05/17/94	05/17/94
	DATE ANALYZED:	05/24/94	05/24/94	05/24/94
ANALYTE	PQL			
2,4-D	2.5	2.5 U	2.5 U	2.5 U
2,4,5-T	0.5	0.5 U	0.5 U	0.5 U
2,4,5-TP	0.5	0.5 U	0.5 U	0.5 U
Dinoseb	2.5	0.5 U	0.5 U	0.5 U

PROJECT: NCBC GULFPORT, MISSISSIPPI — DIOXIN/FURANS AQUEOUS ANALYSES (mg/l) — Validation Table

	SAMPLE LOCATION:	BS-01-DI	BS-01-PI	BS-01-RI	BS-01-RIRE
	LAB NUMBER:	9405219-01	9405219-02	9405219-03	9405219-03
	DATE SAMPLED:	05/17/94	05/17/94	05/17/94	05/17/94
	DATE ANALYZED:	05/25/94	05/25/94	05/25/94	06/10/94
ANALYTE					
2,3,7,8-TCDD		1.0 U	1.42 U	0.40 UR	2.02 UR
2,3,7,8-TCDF		0.93 U	0.91 U	0.39 UR	1.94 UR
1,2,3,7,8-PeCDD		0.43 U	0.96 U	14.3 R	2.61 UR
1,2,3,7,8-PeCDF		0.27 U	1.26 U	10.4 R (MPC)	1.55 UR
2,3,4,7,8-PeCDF		0.23 U	0.96 U	6.17 R (MPC)	1.94 UR
1,2,3,4,7,8-HxCDD		0.24 U	0.76 U	21.0 R (MPC)	2.20 UR
1,2,3,6,7,8-HxCDD		0.23 U	0.77 U	15.8 R (MPC)	2.06 UR
1,2,3,7,8,9-HxCDD		0.87 U	0.85 U	15.9 R	2.17 UR
1,2,3,4,7,8-HxCDF		0.26 U	0.56 U	11.1 R	1.69 UR
1,2,3,6,7,8-HxCDF		0.29 U	0.81 U	12.3 R	1.51 UR
2,3,4,6,7,8-HxCDF		0.25 U	0.59 U	10.1 R (MPC)	1.63 UR
1,2,3,7,8,9-HxCDF		0.40 U	2.43 (MPC)	31.3 R (MPC)	1.85 UR
1,2,3,4,6,7,8-HpCDD		1.15 U	1.27 U	34.8 R	2.76 R
1,2,3,4,6,7,8-HpCDF		0.25 U	0.34 U	24.3 R (MPC)	4.65 R (MPC)
1,2,3,4,7,8,9-HpCDF		1.49 U	1.48 U	29.7 R	1.73 UR
OCDD		1.95 U	2.44 U	71.0 R	9.95 R
OCDF		3.32 U	2.05 U	69.3 R	98.2 R

PROJECT: NCBC GULFPORT, MISSISSIPPI — INORGANIC AQUEOUS ANALYSES (ug/l) — Validation Table

ANALYTE	CRQL	BS-01-DI	BS-01-PI	BS-01-RI
SAMPLE LOCATION:		BS-01-DI	BS-01-PI	BS-01-RI
LAB NUMBER:		M2717601	M2717602	M2717603
DATE SAMPLED:		05/17/94	05/17/94	05/17/94
Antimony	60	15.7 U	15.7 U	15.7 U
Arsenic	10	0.60 UJ	0.60 UJ	0.60 UJ
Barium	200	1.3 J	6.4 J	1.2 J
Beryllium	5	0.15 U	0.15 U	0.15 U
Cadmium	5	2.7 U	2.7 U	2.7 U
Chromium	10	2.8 U	2.8 U	2.8 U
Cobalt	50	3.6 U	3.6 U	3.6 U
Copper	25	4.2 U	10.2 U	3.2 U
Lead	3	1.8 R	1.8 R	1.8 R
Mercury	0.2	0.08 U	0.08 U	0.08 U
Nickel	40	9.7 U	9.7 U	9.7 U
Selenium	5	0.79 UJ	0.79 UJ	0.79 UJ
Silver	10	2.7 U	2.7 U	2.7 U
Thallium	10	1.1 UJ	1.1 UJ	1.1 UJ
Vanadium	50	2.1 U	2.1 U	2.1 U
Zinc	20	1.3 U	5.0 J	1.3 U
Tin	200	9.5 U	9.5 U	9.5 U
Cyanide	10	0.81 UJ	0.81 UJ	0.81 UJ
Sulfide	100	0.2	<0.1	<0.1

QAL QUALITY ANALYTICAL LABORATORIES, INC.

MS_Site A.TIM1
mlv.11.94

CHAIN OF CUSTODY RECORD AND AGREEMENT TO PERFORM SERVICES

Project #: 8504.50
Purchase Order #:
Project Name: Gulfport HO
Company Name: ABB - ES
Project Manager or Contact & Phone #: P. Barter / 615-531-1122
Report Copy to: Bob Fisher
Requested Completion Date: 1 Week
Site ID: Site A
Sample Disposal: Dispose [X] Return [ ]

[ ] LGN — One Innovation Drive, Suite C, Alachua, FL 32615-9586, (904) 462-3050 FAX (904) 462-1670
[ ] LRD — 5090 Caterpillar Road, Redding, CA 96003-1412, (916) 244-5227 FAX (916) 244-4109
[X] LMG — 2567 Fairlane Drive, Montgomery, AL 36116-1622, (205) 271-2440 FAX (205) 271-3428
[ ] LKW — Canviro Analytical Laboratories, Inc., 50 Bathurst, Unit 12, Waterloo, Ontario, Canada N2V 2C5, (519) 747-2575 FAX (519) 747-3806

THIS AREA FOR LAB USE ONLY: Lab # | Page | of | Client Service | Price Source A P Q S | Acct Code | Test Group | Project Code | Ack. Gen. | LIMS Ver | Login | Mult. | COC Review

Sampling Date	Sampling Time	Type COMP	Type GRAB	Matrix WATER	Matrix SOIL	CLIENT SAMPLE ID (9 CHARACTERS)	QC ID (3 CHAR)	# OF CONTAINERS	Appendix IX VOAs	App. IX SVOA PAH 8310	App IX - Pest/PCB, Herbicide, OP Pest	Dioxin 8290	App IX Sulfide	App IX Metals	App IX Cyanide	SAMPLE REMARKS	LAB 1 ID	LAB 2 ID
5/17/94	0830		X	X		BS-01-DI	FB	11	3	2	2	1	1	1	1	Field Blank		
5/17/94	0900		X	X		BS-01-PI	FB	11	3	2	2	1	1	1	1	Field Blank		
5/17/94	0845		X	X		BS-01-RI	ER	11	3	2	2	1	1	1	1	Equipment Rinse		
5/17/94	—		X	X		BS-01-TB	TB	3	3							Trip Blank		
5/17/94	1100		X	X		GPTHOGW-1		11	3	2	2	1	1	1	1			
5/17/94	1100		X	X		GPTHOGW-1	MSD	11	6	4	4	2	2	2	2	MS/MSD		
5/17/94	1115		X	X		GPTHOGW1	DUP	11	3	2	2	1	1	1	1	Duplicate		
5/17/94	1330		X	X		GPTHOGW-2		11	3	2	2	1	1	1	1			
5/17/94	1430		X	X		GPTHOGW-3		11	3	2	2	1	1	1	1			
5/17/94	1530		X	X		GPTHOGW-4		11	3	2	2	1	1	1	1			

Sampled By & Title (Please sign and print name): Kate Kelly — Date/Time: 5/17/94 1700
Relinquished By (Please sign and print name): Kate Kelly — Date/Time: 5/17/94 1730
Received By (Please sign and print name) — Date/Time
Relinquished By (Please sign and print name) — Date/Time
Received By (Please sign and print name) — Date/Time
Relinquished By (Please sign and print name) — Date/Time
Received By (Please sign and print name) — Date/Time
Shipped Via: UPS Fed-Ex Other ____ — Shipping #

HAZWRAP/NESSA: Y N
EDATA: Y N
QC LEVEL 1 2 3 OTHER ____
pH | Ice
Custody Seal | Temp

Batch Remarks:

Instructions and Agreement Provisions on Reverse Side

DISTRIBUTION: Original - LAB, Yellow - LAB, Pink - Client

FIELD BORING LOG			BORING NO.: GPT-A-01
PROJECT NO.: 8504.30	PROJECT NAME: NCBC H.O. II		PAGE 1 OF 1
DRILLING CONTRACTOR: Ivey Drilling	DRILLER: E. Fuller	DATE STARTED: 4-12-94	COMPLETED: 4-12-94
METHOD: HSA	AUGER SIZE: 4.25"	OVA: FID	PROTECTION LEVEL: MODIFIED LEVEL D
GROUND ELEV.: NA	SOIL DRILLED: Sand	WATER LEVEL: 3.0'	TOTAL DEPTH: 15'
LOGGED BY: R. Fisher	CHECKED BY: R. Fisher	DATE: 4-12-94	

SAMPLE NO.	DEPTH IN FEET	BLOWS PER 6-INCHES	PEN. / REC.	DESCRIPTION	LAB	FIELD SCREENING		MONITORING	
						FID	UV\IR	TIP	LEL
	0 - 3	HSA		Dark brown and gray silty clay with some sand, cohesive and dry		0 ppm			
	3 - 5	2,4,3,8	24/8	Gray fine to medium sand with some silt, moist		70 ppm			
	5 - 7	5,10,11,12	24/22	5.0' - 6.5' gray fine to medium sand, wet		70 ppm			
				6.5' - 7.0' dark brown medium sand with some silt, wet		30 ppm			
GPT-A-01	7 - 9	1,3,4,8	24/16	7.0' - 8.0' dark brown silty sand, wet		20 ppm			
				8.0' - 9.0' dark brown medium sand with some fine sand, wet		10 ppm			
	9 - 11	6,6,7,12	24/18	Dark brown medium sand, fine gravel lens at 10'		0 ppm			
	11 - 13	3,5,14,21	24/18	11.0' - 12.0' dark brown medium sand		0 ppm			
				12.0' - 13.0' fine to medium gray sand, wet		0 ppm			
	13 - 15	2,2,7,9	24/20	Light gray fine sand with some silt, wet		0 ppm			

TITLE: Gulfport HO II		**LOG of WELL:** GPT-A-01	**BORING NO.** GPT-A-01
CLIENT: U.S. NAVY, SOUTHNAVFACENGCOM			**PROJECT NO:** 8504-30
CONTRACTOR: Ivey Drilling		**DATE STARTED:** 04/12/94	**COMPLTD:** 04/12/94
METHOD: HSA	**CASE SIZE:** 2"	**BORING DIA.:** 8.75"	**PROTECTION LEVEL:** D
TOC ELEV.: NA FT.	**MONITOR INST.:** FID	**TOT DPTH:** 15.0FT.	**DPTH TO ∇** 3.0 FT.
LOGGED BY: R. Fisher	**WELL DEVELOPMENT DATE:** 4/16/94		**SITE:** Site A, Former HO Storage Area

DEPTH FT.	LABORATORY SAMPLE ID	SAMPLE	RECOVERY	HEADSPACE (ppm)	SOIL/ROCK DESCRIPTION AND COMMENTS	LITHOLOGIC SYMBOL	SOIL CLASS	
				0	Silty clay, dark brown and gray with some sand, cohesive and dry.		CL	
			8"	70	Sand, fine to medium with some silt, gray, moist.		SM	2,4,3,8
5			22"	70	Sand, fine to medium, gray, wet.			5,10,11,12
				30	Sand, medium with some silt, dark brown, wet.			
			16"	20	Silty sand, dark brown, wet.			1,3,4,8
				10	Sand, medium with some fine, dark brown, wet.			
10			18"	0	Sand, medium, dark brown. Fine gravel lens at 10 ft.			8,8,7,12
			18"	0	Sand, medium, dark brown.			3,5,14,21
					Sand, fine to medium, gray, wet.			
15			20"	0	Sand, fine with some silt, light gray, wet.			2,2,7,9
					total depth = 15.0 ft.			
20								

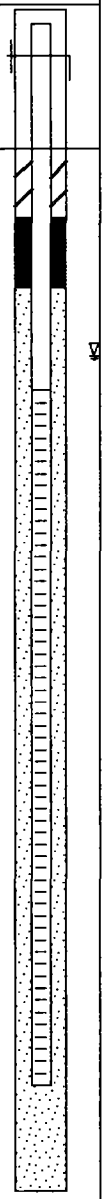

 ABB ENVIRONMENTAL SERVICES, INC.

DEPARTMENT OF THE NAVY
SOUTHERN DIVISION
NAVAL FACILITIES ENGINEERING COMMAND
2155 EAGLE DRIVE, P. O. Box 190010
NORTH CHARLESTON, S.C. 29419-9010

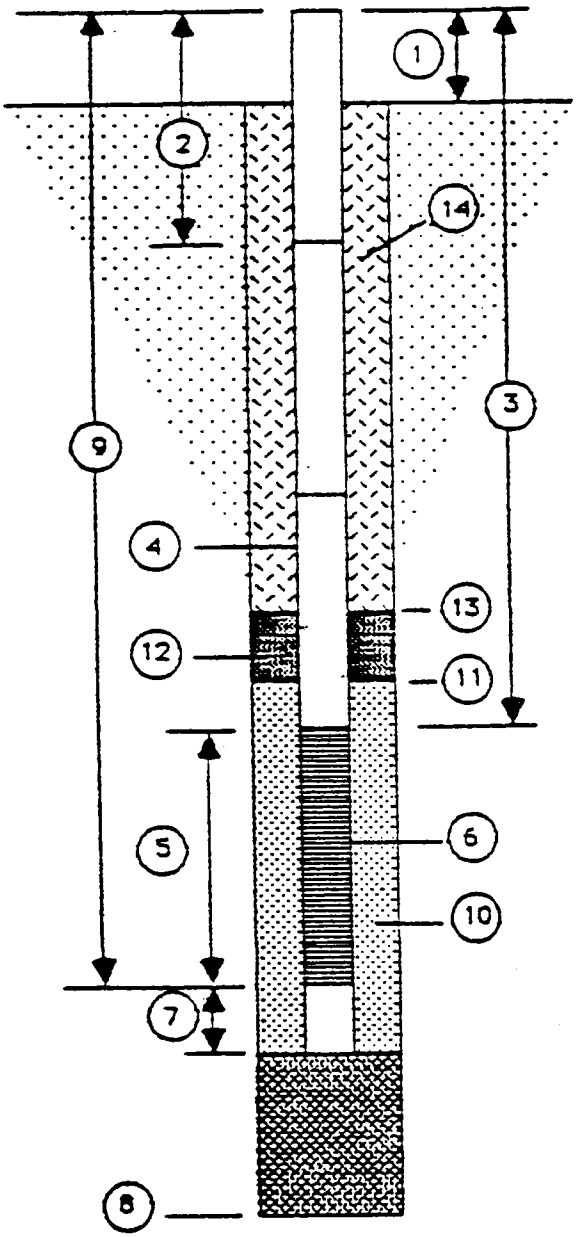

WELL CONSTRUCTION DETAILS

WELL NUMBER GPT-A-01

DATE OF INSTALLATION 4-12-94

1. **Height of Casing Above Ground** 2.5′
2. **Depth to first Coupling** 3.5′

   Coupling Interval Depths NA
3. **Total Length of Blank Pipe** 3.5′
4. **Type of Blank Pipe** 2" Sch 10S, Type 304 Stainless Steel
5. **Length of Screen** 10′
6. **Type of Screen** 0.020-slot, 2" Sch 10S Type 304 Stainless Steel
7. **Length of Sump** NA
8. **Total Depth of Boring** 15′ **Hole Diameter** 8.75"
9. **Depth to Bottom of Screen** 13.5′
10. **Type of Screen Filter** Silica Sand

    Quantity Used 200 lbs **Size** 20/30 **U/C** _____
11. **Depth to Top of Filter** 2′
12. **Type of Seal** Bentonite chips

    Quantity Used 50 lbs
13. **Depth to Top of Seal** 1′
14. **Type of Grout** Neat Cement

    Grout Mixture 5% Bentonite

    Method of Placement Poured

COMMENTS ON INSTALLATION:

WELL DEVELOPMENT DATA SHEET

ABB-ES

WELL DESIGNATION: GPT-A-01 DATE OF DEVELOPMENT: 4-18-94

DATE OF WELL INSTALLATION: 4-12-94 PERSONNEL: R. Fisher

STATIC WATER LEVEL BEFORE DEVELOPMENT: 4.01' btoc BOTTOM OF WELL: 16.9' btoc

HEIGHT OF WATER COLUMN: 12.89' WELL I.D.: 2.0" HEIGHT OF SATURATED SANDPACK: 12.89'

GALLONS\VOLUME: 2.1 GAL X 3 VOLUMES = 6.3 GAL TOTAL DEVELOPMENT VOLUME

FIELD MEASUREMENTS

	VOLUME NO. 1 (INITIAL SAMPLE)	VOLUME NO. 2 (20 GAL)	VOLUME NO. 3 (40 GAL)	VOLUME NO. 4 (55 GAL)	VOLUME NO. 5 (75 GAL)	VOLUME NO. 6 (110 GAL)
pH	6.27	6.45	6.48	6.40	6.65	6.64
Conduct.	221	138	109	100	96	90
Temp.	26 °C	21 °C	22 °C	21.5 °C	21 °C	21 °C
Descrip.	light brown, slightly turbid	brown, turbid	brown, turbid		light brown, medium turbidity	very light tan, slightly turbid

TOTAL VOLUME REMOVED: 110 GAL

FINAL FIELD PARAMETERS:

pH - 6.64

Conduct. - 90 microohms

Turbid. - slight

Descrip. - 21 °C

WATER LEVEL 24 HOURS AFTER DEVELOPMENT: 4.43' btoc

* All development was performed with a surg block and submergible pump.

Comments:

Last 20 gallons much clearer.

Well GPT-A-02

FIELD BORING LOG			BORING NO.: GPT-A-02
PROJECT NO.: 8504.30	PROJECT NAME: NCBC H.O. II		PAGE 1 OF 1
DRILLING CONTRACTOR: Ivey Drilling	DRILLER: E. Fuller	DATE STARTED: 4-13-94	COMPLETED: 4-13-94
METHOD: HSA	AUGER SIZE: 4.25"	OVA: FID	PROTECTION LEVEL: LEVEL B
GROUND ELEV.: NA	SOIL DRILLED: Sand	WATER LEVEL:	TOTAL DEPTH: 14'
LOGGED BY: R. Fisher	CHECKED BY: R. Fisher	DATE: 4-13-94	

SAMPLE NO.	DEPTH IN FEET	BLOWS PER 6-INCHES	PEN. REC.	DESCRIPTION	LAB	FIELD SCREENING		MONITORING	
						FID	UV\IR	TIP	LEL
	0 - 2	HSA		Tan/buff fine to medium sand with little silt, dry		0 ppm			
	2 - 4	3,5,5,6	24/10	Tan/buff fine to medium sand with little silt, wet		3 ppm			
	4 - 6	3,10,11,15	24/18	Tan/buff fine to medium sand with little silt, wet		3 ppm			
	6 - 8	1,1,9,11	24/16	Dark brown fine to medium sand with little silt, wet		2 ppm			
	8 - 10	5,6,7,10	24/20	Dark brown fine to medium sand with little silt, wet		0 ppm			
	10 - 12	1,5,4,7	24/24	Brown medium sand with fine gravel and a trace of cobble, wet		0 ppm			
	12 - 14	2,3,6,11	24/24	Brown medium sand with fine gravel and a trace of cobble, wet		0 ppm			
				Terminate boring at 14' bgs. Redrill with plug for monitoring well.					

TITLE: Gulfport HO II		**LOG of WELL:** GPT-A-02	**BORING NO.** GPT-A-02
CLIENT: U.S. NAVY, SOUTHNAVFACENGCOM			**PROJECT NO:** 8504-30
CONTRACTOR: Ivey Drilling		**DATE STARTED:** 04/13/94	**COMPLTD:** 04/13/94
METHOD: HSA	**CASE SIZE:** 2"	**BORING DIA.:** 8.75"	**PROTECTION LEVEL:** B
TOC ELEV.: NA FT.	**MONITOR INST.:** FID	**TOT DPTH:** 14.0FT.	**DPTH TO ∇** FT.
LOGGED BY: R. Fisher	**WELL DEVELOPMENT DATE:** 4/17/94		**SITE:** Site A, Former HO Storage Area

DEPTH FT.	LABORATORY SAMPLE ID	SAMPLE	RECOVERY	HEADSPACE (ppm)	SOIL/ROCK DESCRIPTION AND COMMENTS	LITHOLOGIC SYMBOL	SOIL CLASS	
				0	Sand, fine to medium with little silt, tan/buff, dry, fill.		SM	
			10"	3	Sand, fine to medium with little silt, tan/buff, wet.			3,5,5,6
5			18"	3	Sand, fine to medium with little silt, tan/buff, wet.			3,10,11,15
			16"	2	Sand, fine to medium with little silt, dark brown, wet.			1,1,9,11
			20"	0	Sand, fine to medium with little silt, dark brown, wet.			5,6,7,10
10			24"	0	Sand, medium with fine gravel and a trace of cobble, brown, wet.			1,5,4,7
			24"	0	Sand, medium with fine gravel and a trace of cobble, brown, wet.			2,3,6,11
15					total depth = 14.0 ft.			
20								

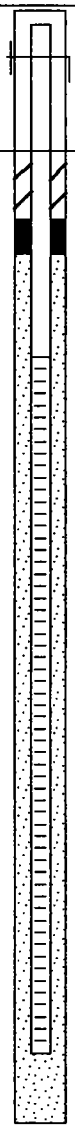

ABB ENVIRONMENTAL SERVICES, INC.

DEPARTMENT OF THE NAVY
SOUTHERN DIVISION
NAVAL FACILITIES ENGINEERING COMMAND
2155 EAGLE DRIVE, P. O. Box 190010
NORTH CHARLESTON, S.C. 29419-9010

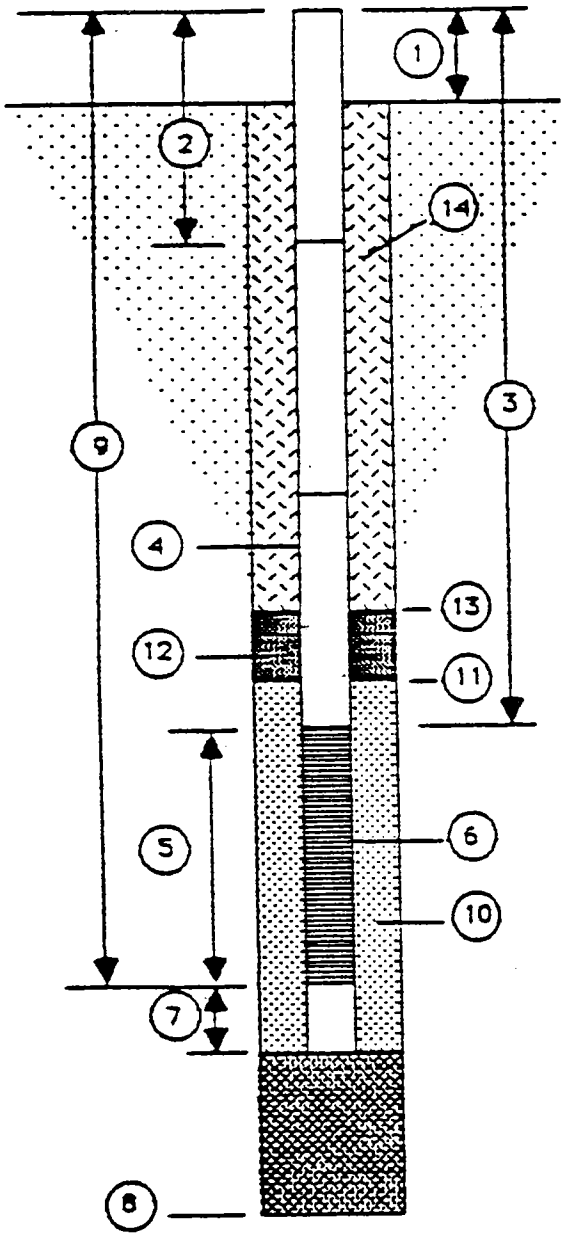

WELL CONSTRUCTION DETAILS

WELL NUMBER GPT-A-02

DATE OF INSTALLATION 4-13-94

1. **Height of Casing Above Ground** 2.5'
2. **Depth to first Coupling** 3.5'

   Coupling Interval Depths NA
3. **Total Length of Blank Pipe** 3.5'
4. **Type of Blank Pipe** 2" Sch 10S, Type 304 Stainless Steel
5. **Length of Screen** 10'
6. **Type of Screen** 0.020-slot, 2" Sch 10S Type 304 Stainless Steel
7. **Length of Sump** NA
8. **Total Depth of Boring** 14' **Hole Diameter** 8.75"
9. **Depth to Bottom of Screen** 13'
10. **Type of Screen Filter** Silica Sand

    Quantity Used 150 lbs **Size** 20/30 **U/C** _____
11. **Depth to Top of Filter** 1.5'
12. **Type of Seal** Bentonite chips

    Quantity Used 60 lbs
13. **Depth to Top of Seal** 1'
14. **Type of Grout** Neat Cement

    Grout Mixture 5% Bentonite

    Method of Placement Poured

COMMENTS ON INSTALLATION:

WELL DEVELOPMENT DATA SHEET

ABB-ES

WELL DESIGNATION: GPT-A-02 DATE OF DEVELOPMENT: 4-17-94

DATE OF WELL INSTALLATION: 4-13-94 PERSONNEL: R. Fisher

STATIC WATER LEVEL BEFORE DEVELOPMENT: 4.09' btoc BOTTOM OF WELL: 16.1' btoc

HEIGHT OF WATER COLUMN: 12.01' WELL I.D.: 2.0" HEIGHT OF SATURATED SANDPACK: 12.01'

GALLONS\VOLUME: 1.96 GAL X 3 VOLUMES = 5.88 GAL TOTAL DEVELOPMENT VOLUME

FIELD MEASUREMENTS

	VOLUME NO. 1 (INITIAL SAMPLE)	VOLUME NO. 2 (30 GAL)	VOLUME NO. 3 (75 GAL)	VOLUME NO. 4 (110 GAL)
pH	6.74	6.50	6.56	6.46
Conduct.	120	110	120	120
Temp.	20 °C	20 °C	20.5 °C	21 °C
Descrip.	very turbid	very turbid	turbid	turbid

TOTAL VOLUME REMOVED: 110 GAL

FINAL FIELD PARAMETERS:

pH - 6.46

Conduct. - 120 microohms

Turbid. - turbid

Descrip. - 21 °C

WATER LEVEL 24 HOURS AFTER DEVELOPMENT: 4.75' btoc

* All development was performed with a surg block and submergible pump.

Comments:

FIELD BORING LOG			BORING NO.: GPT-A-03
PROJECT NO.: 8504.30	PROJECT NAME: NCBC H.O. II		PAGE 1 OF 1
DRILLING CONTRACTOR: Ivey Drilling	DRILLER: E. Fuller	DATE STARTED: 4-14-94	COMPLETED: 4-14-94
METHOD: HSA	AUGER SIZE: 4.25"	OVA: FID	PROTECTION LEVEL: LEVEL B
GROUND ELEV.: NA	SOIL DRILLED: Sand	WATER LEVEL: 3.5'	TOTAL DEPTH: 14'
LOGGED BY: R. Fisher	CHECKED BY: R. Fisher	DATE: 4-14-94	

SAMPLE NO.	DEPTH IN FEET	BLOWS PER 6-INCHES	PEN. REC.	DESCRIPTION	LAB	FIELD SCREENING		MONITORING	
						FID	UV\IR	TIP	LEL
	0 - 3	HSA		Silt with same sand, cohesive, moist		5 ppm			
	3 - 8	HSA		Fine to medium sand, light brown with some silt, moist to wet		60 ppm max.			
	8 - 14	HSA		Fine to medium sand, light brown with some silt, wet		10 ppm			

TITLE: Gulfport HO II		**LOG of WELL:** GPT-A-03	**BORING NO.** GPT-A-03
CLIENT: U.S. NAVY, SOUTHNAVFACENGCOM			**PROJECT NO:** 8504-30
CONTRACTOR: Ivey Drilling		**DATE STARTED:** 04/14/94	**COMPLTD:** 04/14/94
METHOD: HSA	**CASE SIZE:** 2"	**BORING DIA.:** 8.75"	**PROTECTION LEVEL:** B
TOC ELEV.: NA FT.	**MONITOR INST.:** FID	**TOT DPTH:** 14.0FT.	**DPTH TO ∇** FT.
LOGGED BY: R. Fisher	**WELL DEVELOPMENT DATE:** 4/18/94		**SITE:** Site A, Former HO Storage Area

DEPTH FT.	LABORATORY SAMPLE ID	SAMPLE	RECOVERY	HEADSPACE (ppm)	SOIL/ROCK DESCRIPTION AND COMMENTS	LITHOLOGIC SYMBOL	SOIL CLASS
				5	Silt, with some sand, cohesive, moist.		SM
				60 max	Sand, fine to medium with some silt, light brown, moist to wet.		
5							
				10	Sand, fine to medium with some silt, light brown, wet.		
10							
					total depth = 14.0 ft.		
15							
20							

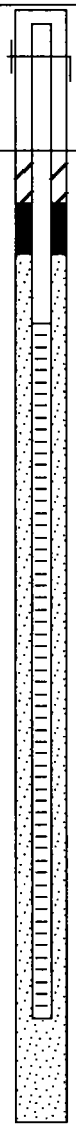

ABB ENVIRONMENTAL SERVICES, INC.

DEPARTMENT OF THE NAVY
SOUTHERN DIVISION
NAVAL FACILITIES ENGINEERING COMMAND
2155 EAGLE DRIVE, P. O. Box 190010
NORTH CHARLESTON, S.C. 29419-9010

WELL CONSTRUCTION DETAILS

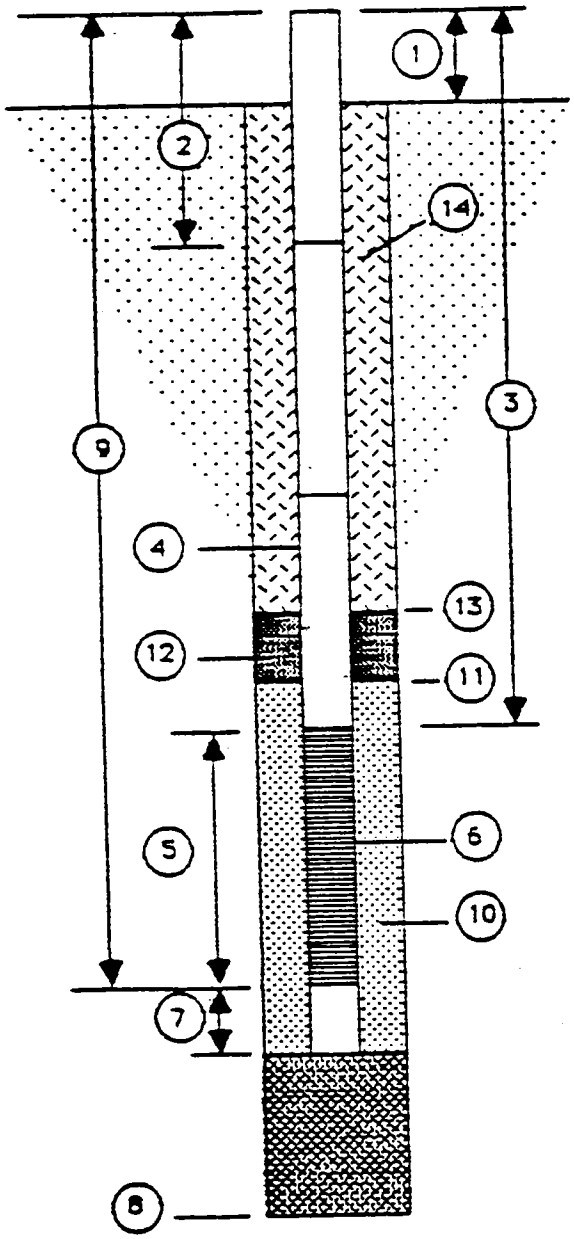

WELL NUMBER GPT-A-03

DATE OF INSTALLATION 4-14-94

1. **Height of Casing Above Ground** 2.5'
2. **Depth to first Coupling** 3.25'

   Coupling Interval Depths NA
3. **Total Length of Blank Pipe** 3.25'
4. **Type of Blank Pipe** 2" Sch 10S, Type 304 Stainless Steel
5. **Length of Screen** 10'
6. **Type of Screen** 0.020-slot, 2" Sch 10S Type 304 Stainless Steel
7. **Length of Sump** NA
8. **Total Depth of Boring** 14' **Hole Diameter** 8.75"
9. **Depth to Bottom of Screen** 12.5'
10. **Type of Screen Filter** Silica Sand

    Quantity Used 200 lbs **Size** 20/30 **U/C** _____
11. **Depth to Top of Filter** 1.5'
12. **Type of Seal** Bentonite chips

    Quantity Used 50 lbs
13. **Depth to Top of Seal** 0.75'
14. **Type of Grout** Neat Cement

    Grout Mixture 5% Bentonite

    Method of Placement Poured

COMMENTS ON INSTALLATION:

WELL DEVELOPMENT DATA SHEET

ABB-ES

WELL DESIGNATION: GPT-A-03 DATE OF DEVELOPMENT: 4-16-94

DATE OF WELL INSTALLATION: 4-14-94 PERSONNEL: R. Fisher/K. Kelly

STATIC WATER LEVEL BEFORE DEVELOPMENT: 7.14' btoc BOTTOM OF WELL: 15.0' btoc

HEIGHT OF WATER COLUMN: 7.86' WELL I.D.: 2.0" HEIGHT OF SATURATED SANDPACK: 7.86'

GALLONS\VOLUME: 1.3 GAL X 3 VOLUMES = 3.9 GAL TOTAL DEVELOPMENT VOLUME

FIELD MEASUREMENTS

	VOLUME NO. 1 (INITIAL SAMPLE)	VOLUME NO. 2 (20 GAL)	VOLUME NO. 3 (40 GAL)	VOLUME NO. 4 (50 GAL)	VOLUME NO. 5 (80 GAL)	VOLUME NO. 6 (100 GAL)
pH	5.04	5.14	5.50	5.71	5.43	6.01
Conduct.	140	109	101	101	90	95
Temp.	19 °C	19 °C	19 °C	21 °C	20 °C	20 °C
Descrip.	brown, turbid	brown, slightly turbid	brown, slightly turbid	brown, slightly turbid	brown, slightly turbid	

TOTAL VOLUME REMOVED: 100 GAL

FINAL FIELD PARAMETERS: pH - 6.01

Conduct. - 95 microohms

Turbid. -

Descrip. - 20 °C

WATER LEVEL 24 HOURS AFTER DEVELOPMENT: 7.48' btoc

* All development was performed with a surg block and submergible pump.

Comments:

FIELD BORING LOG			BORING NO.: GPT-A-04
PROJECT NO.: 8504.30	PROJECT NAME: NCBC H.O. II		PAGE 1 OF 1
DRILLING CONTRACTOR: Ivey Drilling	DRILLER: E. Fuller	DATE STARTED: 4-14-94	COMPLETED: 4-14-94
METHOD: HSA	AUGER SIZE: 4.25"	OVA: FID	PROTECTION LEVEL: LEVEL B
GROUND ELEV.: NA	SOIL DRILLED: Sand	WATER LEVEL: 3.5'	TOTAL DEPTH: 13'
LOGGED BY: R. Fisher	CHECKED BY: R. Fisher	DATE: 4-14-94	

SAMPLE NO.	DEPTH IN FEET	BLOWS PER 6-INCHES	PEN. / REC.	DESCRIPTION	LAB	FIELD SCREENING		MONITORING	
						FID	UV\IR	TIP	LEL
	0 - 2			Light brown silty sand, fill		0 ppm			
	2 - 13			Gray medium sand with fine sand and little silt		50 ppm at 8' bgs			
				Terminate boring at 13'					

TITLE: Gulfport HO II	**LOG of WELL:** GPT-A-04	**BORING NO.** GPT-A-04
CLIENT: U.S. NAVY, SOUTHNAVFACENGCOM		**PROJECT NO:** 8504-30
CONTRACTOR: Ivey Drilling	**DATE STARTED:** 04/14/94	**COMPLTD:** 04/14/94
METHOD: HSA	**CASE SIZE:** 2"	**BORING DIA.:** 8.75"	**PROTECTION LEVEL:** B
TOC ELEV.: NA FT.	**MONITOR INST.:** FID	**TOT DPTH:** 13.0FT.	**DPTH TO ∇** FT.
LOGGED BY: R. Fisher	**WELL DEVELOPMENT DATE:** 4/18/94	**SITE:** Site A, Former HO Storage Area

DEPTH FT.	LABORATORY SAMPLE ID	SAMPLE	RECOVERY	HEADSPACE (ppm)	SOIL/ROCK DESCRIPTION AND COMMENTS	LITHOLOGIC SYMBOL	SOIL CLASS
				0	Silty sand, light brown, fill.		SM
					Sand, medium with fine, little silt, gray.		
5							
				50			
10							
					total depth = 13.0 ft.		
15							
20							

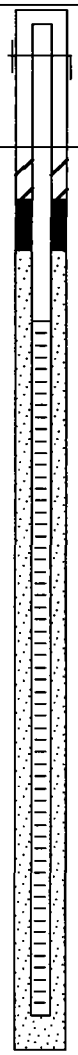

ABB ENVIRONMENTAL SERVICES, INC.

DEPARTMENT OF THE NAVY
SOUTHERN DIVISION
NAVAL FACILITIES ENGINEERING COMMAND
2155 EAGLE DRIVE, P. O. Box 190010
NORTH CHARLESTON, S.C. 29419-9010

WELL CONSTRUCTION DETAILS

WELL NUMBER GPT-A-04

DATE OF INSTALLATION 4-14-94

1. **Height of Casing Above Ground** 2.5'
2. **Depth to first Coupling** 3.25'

   Coupling Interval Depths NA
3. **Total Length of Blank Pipe** 3.25'
4. **Type of Blank Pipe** 2" Sch 10S, Type 304 Stainless Steel
5. **Length of Screen** 10'
6. **Type of Screen** 0.020-slot, 2" Sch 10S Type 304 Stainless Steel
7. **Length of Sump** NA
8. **Total Depth of Boring** 13' **Hole Diameter** 8.75"
9. **Depth to Bottom of Screen** 12.5'
10. **Type of Screen Filter** Silica Sand

    Quantity Used 200 lbs **Size** 20/30 **U/C** _____
11. **Depth to Top of Filter** 1.5'
12. **Type of Seal** Bentonite chips

    Quantity Used 50 lbs
13. **Depth to Top of Seal** 0.75'
14. **Type of Grout** Neat Cement

    Grout Mixture 5% Bentonite

    Method of Placement Poured

COMMENTS ON INSTALLATION:

WELL DEVELOPMENT DATA SHEET

ABB-ES

WELL DESIGNATION: GPT-A-04 DATE OF DEVELOPMENT: 4-16-94

DATE OF WELL INSTALLATION: 4-14-94 PERSONNEL: R. Fisher/K. Kelly/A. Cohen

STATIC WATER LEVEL BEFORE DEVELOPMENT: 6.55' btoc BOTTOM OF WELL: 15.0' btoc

HEIGHT OF WATER COLUMN: 8.45' WELL I.D.: 2.0" HEIGHT OF SATURATED SANDPACK: 8.45'

GALLONS\VOLUME: 1.4 GAL X 3 VOLUMES = 4.1 GAL TOTAL DEVELOPMENT VOLUME

FIELD MEASUREMENTS

	VOLUME NO. 1 (INITIAL SAMPLE)	VOLUME NO. 2 (20 GAL)	VOLUME NO. 3 (40 GAL)	VOLUME NO. 4 (60 GAL)	VOLUME NO. 5 (110 GAL)
pH	4.75	4.76	5.14	5.58	5.33
Conduct.	221	121	98	100	106
Temp.	21 °C	20 °C	20 °C	20 °C	20 °C
Descrip.	brown, very turbid	brown, very turbid	brown, very turbid	brown, turbid	

TOTAL VOLUME REMOVED: 100 GAL

FINAL FIELD PARAMETERS:

pH - 5.33

Conduct. - 106 microohms

Turbid. -

Descrip. - 20 °C

WATER LEVEL 24 HOURS AFTER DEVELOPMENT: 6.83' btoc

* All development was performed with a surg block and submergible pump.

Comments:

Soils Analysis

PARTICLE SIZE ANALYSIS
ASTM D-422

Client Name:	ABB	Sample I.D.:	37881002
Proj. Desc. :	ABB/GULFPORT	Client Sample I.D.:	GP1-A-2
Proj. Number:	LRD01000.XY.GP	Date Analyzed:	05/06/94
Attention:	Ms. P. Baxter		

INITIAL SAMPLE MASS	Units		HYGROSCOPIC MOISTURE CONTENT	Units	
Mass Dry Sample	g	50.00	Can No.	--	[ ]
Moisture Cont	%	0.00	Gross Wet Mass	g	50.00
Corr. Dry Mass	g	50.00 (M)	Gross Dry Mass	g	50.00
Pass #10 sieve	%	100.00 (B)	Moisture Mass	g	0.00
Mass of total sample represented			Tare Mass	g	0.00
by mass used in hydrometer test			Dry Soil Mass	g	50.00
W = (M/B) x 100 =		50.00 g	Moisture Content	%	0.00

Hydrometer No.: 87026 Type: 152H
Dispersing Agent: Sodium Hexametaphosphate
Amount Used: 50 ml

Specific Gravity: 2.65

Material Retained On 75 um Sieve After Washing

STD Sieve #	Gross Mass	Tare Mass	Net Mass Indiv.	Retained Accumulative	Percent Retained Individual	Percent Retained Accumulative	STD Sieve	Accum. Percent Passing
20#	429.93	428.77	1.2	--	2.3	2.3	0.850mm	97.7
40#	404.08	395.02	9.1	10.2	18.1	20.4	0.425mm	79.6
80#	372.98	337.12	35.9	46.1	71.7	92.2	0.180mm	7.8
100#	359.84	357.53	2.3	48.4	4.6	96.8	0.150mm	3.2
200#	368.70	367.90	0.8	49.2	1.6	98.4	0.075mm	1.6
<200#	360.24	360.21	0.0	49.2	0.1	98.4	<0.075mm	1.6

Reading Time Day	Hr	Min	Elapsed Time (min)	Hydrom Reading	Temp °C	Corr. Hydrom Reading	Particle Diam. (mm)	Pct Soil Susp.
5	7	11	0	--	21.2	--	--	--
5	7	12	0.67	8.5	21.2	3.2	0.0635	6.4
5	7	42	30	7.5	21.2	2.2	0.0095	4.4
5	8	12	60	7.0	21.1	1.7	0.0068	3.4
5	11	12	240	6.5	21.0	1.2	0.0034	2.4
5	3	12	480	6.5	21.0	1.2	0.0024	2.4
6	7	12	1440	6.5	21.1	1.2	0.0014	2.4

Approved By: Fred Bickell Date: 5/6/94
Fred Bickell
Inorganics Supervisor

Report of Analytical Results
INORGANICS

Date Collected: 04/12/94
Date Received: 04/15/94
Sample Matrix: Soil
Sample Description:

Client Sample ID: GP1-A-1
Lab ReferenceNum: RD-37881
Lab Sample ID: RD-37881-001

CATEGORY NAME Analytical Parameter	Result	Units	Reporting Level	Date of Analysis	Analytical Method(s)
GENERAL					
Moisture	12.7	%		04/28/94	ASTM D2216
DEMAND AND GENERAL ORGANIC					
Total Organic Carbon	1390	mg/Kg	5.0	04/26/94	EPA415.2
Total Petroleum Hydrocarbons	< 1.9	mg/Kg	1.9	05/02/94	S3550/9071/418.1

(701)

Fred Bichel 5/6/94
Approved By

Quality Analytical Laboratories (QAL), Inc. -- Redding

000004

R 5/5/6/94

Soils Analysis

PARTICLE SIZE ANALYSIS
ASTM D-422

Client Name:	ABB	Sample I.D.:	37881001
Proj. Desc. :	ABB/GULFPORT	Client Sample I.D.:	GP1-A-1
Proj. Number:	LRD01000.XY.GP	Date Analyzed:	05/06/94
Attention:	Ms. P. Baxter		

INITIAL SAMPLE MASS	Units		HYGROSCOPIC MOISTURE CONTENT	Units	
Mass Dry Sample	g	50.00	Can No.	--	[ ]
Moisture Cont	%	0.00	Gross Wet Mass	g	50.00
Corr. Dry Mass	g	50.00 (M)	Gross Dry Mass	g	50.00
Pass #10 sieve	%	100.00 (B)	Moisture Mass	g	0.00
Mass of total sample represented			Tare Mass	g	0.00
by mass used in hydrometer test			Dry Soil Mass	g	50.00
W = (M/B) x 100 =		50.00 g	Moisture Content	%	0.00

Hydrometer No.: 87026 Type: 152H
Dispersing Agent: Sodium Hexametaphosphate
Amount Used: 50 ml

Specific Gravity: 2.65

Material Retained On 75 um Sieve After Washing

STD Sieve #	Gross Mass	Tare Mass	Net Mass Indiv.	Retained Accumulative	Percent Retained Individual	Percent Retained Accumulative	STD Sieve	Accum. Percent Passing
20#	430.03	428.75	1.3	--	2.6	2.6	0.850mm	97.4
40#	401.59	395.05	6.5	7.8	13.1	15.6	0.425mm	84.4
80#	370.31	337.15	33.2	41.0	66.3	82.0	0.180mm	18.0
100#	361.04	357.60	3.4	44.4	6.9	88.8	0.150mm	11.2
200#	369.53	367.91	1.6	46.0	3.2	92.1	0.075mm	7.9
<200#	360.30	360.22	0.1	46.1	0.2	92.2	<0.075mm	7.8

Reading Time Day	Hr	Min	Elapsed Time (min)	Hydrom Reading	Temp °C	Corr. Hydrom Reading	Particle Diam. (mm)	Pct Soil Susp.
5	7	09	0	--	21.2	--	--	--
5	7	10	0.67	11.0	21.2	5.7	0.0626	11.4
5	7	40	30	9.0	21.2	3.7	0.0095	7.4
5	8	10	60	8.5	21.1	3.2	0.0067	6.4
5	11	10	240	8.0	21.0	2.7	0.0034	5.4
5	3	10	480	7.5	21.0	2.2	0.0024	4.4
6	7	10	1440	7.0	21.1	1.7	0.0014	3.4

Approved By: Fred Bickell
Fred Bickell
Inorganics Supervisor

Date: 5/6/94

Report of Analytical Results
INORGANICS

Date Collected: 04/13/94
Date Received: 04/15/94
Sample Matrix: Soil
Sample Description:

Client Sample ID: GP1-A-2
Lab ReferenceNum: RD-37881
Lab Sample ID: RD-37881-002

CATEGORY NAME Analytical Parameter	Result	Units	Reporting Level	Date of Analysis	Analytical Method(s)
GENERAL					
Moisture	15.7	%		04/28/94	ASTM D2216
DEMAND AND GENERAL ORGANIC					
Total Organic Carbon	1090	mg/Kg	5.0	04/26/94	EPA415.2
Total Petroleum Hydrocarbons	< 2.0	mg/Kg	2.0	05/02/94	S3550/9071/418.1

(701)

Fred Bickell 5/6/94
Approved By

Quality Analytical Laboratories (QAL), Inc. -- Redding

RJS 5/6/94

To LGN

QAL

QUALITY ANALYTICAL LABORATORIES, INC.

CHAIN OF CUSTODY RECORD AND AGREEMENT TO PERFORM SERVICES

Project #: [illegible]

Purchase Order #:

Project Name: Gulfport II

Company Name: ABB Environmental Services

Project Manager & Phone #: Mr. [ ] Ms. [X] Dr. [ ] P. Pryor 601-531-1922

Report Copy to: K Kelly

Requested Completion Date: Standard

Sampling Requirements: SDWA [ ] NPDES [ ] RCRA [ ] OTHER [ ]

Sample Disposal: Dispose [X] Return [ ]

LAB TEST CODES

ANALYSES REQUESTED

SHADED AREA-- FOR LAB USE ONLY

Lab 1 #: 37881

Lab 2 #:

Quote #:

Kit Request #:

Project #:

No. of Samples:

Page:

of:

COC Rev:

Login: 19 4/19/94

LIMS Ver:

Ack Gen:

Sampling Date	Sampling Time	Type COMP	Type GARB	Matrix WATER	Matrix SOIL	CLIENT SAMPLE ID (9 CHARACTERS)	# OF CONTAINERS	TKN	TPH	Sieve Analysis	Hydrometer	REMARKS	LAB 1 ID	LAB 2 ID
4/12		X			X	GPI-A-1	2	X	X	X	X		1	
4/13		X			X	GPI-A-2	2	X	X	X	X		2	

Response to: Cindy Barba
5/3/94 IN
TOC

Sampled By & Title: K Kelly — K. Kelly — Date/Time: 4/14/94

Received By: D. Ware — Date/Time: 4/19/94 1100

Received By: [illegible] — Date/Time:

Relinquished By: K Kelly — K Kelly — Date/Time: 4/14/94

Relinquished By: Bob Kelly — Date/Time: 4/18/94 1445

Relinquished By: — Date/Time:

HAZWRAP/NESHAP: N

QC Level: 1 2 3 Other:

COC Rec: Y — ICE: Y

Ana Req: Y — TEMP: 17°C

Cust Seal: NO — Ph:

Received By: Nicholas Rivera — Date/Time: 4/15/94 1415

Work Authorized By: — Date/Time:

Remarks:

Shipped Via: UPS BUS Fed-Ex Hand Other

Shipping #: 157794190 1

Instructions and Agreement Provisions on Reverse Side

DISTRIBUTION: Original - LAB Yellow - LAB Pink - Client

000014

PROJECT: NCBC GULFPORT, MISSISSIPPI — VOLATILE AQUEOUS ANALYSES (ug/l) — Validation Table

	SAMPLE LOCATION:	GPTHOGW-1	GPTHOGW-1D	GPTHOGW-2	GPTHOGW-3	GPTHOGW-4
	LAB NUMBER:	27176005	27176006	27176007	27176008	27176009
	DATE SAMPLED:	05/17/94	05/17/94	05/17/94	05/17/94	05/17/94
	DATA ANALYZED:	05/23/94	05/23/94	05/23/94	05/23/94	05/23/94
	DILUTION FACTOR:	1.0	1.0	1.0	1.0	1.0
ANALYTE	CRQL					
Chloromethane	10	10 U	10 U	10 U	10 U	10 U
Bromomethane	10	10 U	10 U	10 U	10 U	10 U
Vinyl Chloride	10	10 U	10 U	10 U	10 U	10 U
Chloroethane	10	10 U	10 U	10 U	10 U	10 U
Methylene Chloride	5	5 U	5 U	5 U	5 U	5 U
Acetone	10	10 U	10 U	10 U	13 U	10 U
Carbon Disulfide	5	5 U	5 U	5 U	2 J	5 U
1,1-Dichloroethene	5	5 U	5 U	5 U	5 U	5 U
1,1-Dichloroethane	5	5 U	5 U	5 U	5 U	5 U
1,2-Dichloroethene (total)	5	5 U	5 U	5 U	5 U	5 U
Chloroform	5	5 U	5 U	5 U	5 U	5 U
1,2-Dichloroethane	5	5 U	5 U	5 U	5 U	5 U
2-Butanone	10	10 U	10 U	10 U	10 U	10 U
1,1,1-Trichloroethane	5	5 U	5 U	5 U	5 U	5 U
Carbon Tetrachloride	5	5 U	5 U	5 U	5 U	5 U
Bromodichloromethane	5	5 U	5 U	5 U	5 U	5 U
1,2-Dichloropropane	5	5 U	5 U	5 U	5 U	5 U
cis-1,3-Dichloropropene	5	5 U	5 U	5 U	5 U	5 U
Trichloroethene	5	5 U	5 U	5 U	5 U	5 U
Dibromochloromethane	5	5 U	5 U	5 U	5 U	5 U
1,1,2-Trichloroethane	5	5 U	5 U	5 U	5 U	5 U
Benzene	5	5 U	5 U	5 U	5 U	5 U
trans-1,3-Dichloropropene	5	5 U	5 U	5 U	5 U	5 U
Bromoform	5	5 U	5 U	5 U	5 U	5 U
4-Methyl-2-Pentanone	10	10 U	10 U	10 U	10 U	10 U
2-Hexanone	10	10 U	10 U	10 U	10 U	10 U
Tetrachloroethene	5	5 U	5 U	5 U	5 U	5 U
1,1,2,2-Tetrachloroethane	5	5 U	5 U	5 U	5 U	5 U
Toluene	5	5 U	5 U	5 U	5 U	5 U
Chlorobenzene	5	5 U	5 U	5 U	5 U	5 U
Ethylbenzene	5	5 U	5 U	5 U	5 U	5 U
Styrene	5	5 U	5 U	5 U	5 U	5 U
Xylene (total)	5	5 U	5 U	5 U	5 U	5 U
Dichlorodifluoromethane	10	10 U	10 U	10 U	10 U	10 U
Trichlorofluoromethane	5	5 U	5 U	5 U	5 U	5 U
Acrolein	100	100 U	100 U	100 U	100 U	100 U
Iodomethane	10	10 U	10 U	10 U	10 U	10 U
Acrylonitrile	100	100 U	100 U	100 U	100 U	100 U
Vinyl acetate	10	10 U	10 U	10 U	10 U	10 U
Dibromomethane	5	5 U	5 U	5 U	5 U	5 U
2-Chloroethyl vinyl ether	10	10 U	10 U	10 U	10 U	10 U
Ethyl methacrylate	5	5 U	5 U	5 U	5 U	5 U
1,2,3-Trichloropropene	5	5 U	5 U	5 U	5 U	5 U
trans-1,4-Dichloro-2-butene	5	5 U	5 U	5 U	5 U	5 U

PROJECT: NCBC GULFPORT, MISSISSIPPI

VOLATILE AQUEOUS ANALYSES (ug/l)

Validation Table

SAMPLE LOCATION:		GPTHOGW-1	GPTHOGW-1D	GPTHOGW-2	GPTHOGW-3	GPTHOGW-4
LAB NUMBER:		27176005	27176006	27176007	27176008	27176009
DATE SAMPLED:		05/17/94	05/17/94	05/17/94	05/17/94	05/17/94
DATA ANALYZED:		05/23/94	05/23/94	05/23/94	05/23/94	05/23/94
DILUTION FACTOR:		1.0	1.0	1.0	1.0	1.0
	CRQL					
Acetonitrile	100	100 U	100 U	100 U	100 U	100 U
3-Chloropropene	5	5 U	5 U	5 U	5 U	5 U
Chloroprene	200	200 U	200 U	200 U	200 U	200 U
Propionitrile	100	100 U	100 U	100 U	100 U	100 U
Methacrylonitrile	5	5 U	5 U	5 U	5 U	5 U
Isobutyl alcohol	200	200 R	200 R	200 R	200 R	200 R
Methyl methacrylate	10	10 U	10 U	10 U	10 U	10 U
1,4-Dioxane	200	200 R	200 R	200 R	200 R	200 R
1,2-Dibromoethane	5	5 U	5 U	5 U	5 U	5 U
1,1,1,2-Tetrachloroethane	5	5 U	5 U	5 U	5 U	5 U
Pentachloroethane	10	10 U	10 U	10 U	10 U	10 U
1,3-Dichlorobenzene	5	5 U	5 U	5 U	5 U	5 U
1,4-Dichlorobenzene	5	5 U	5 U	5 U	5 U	5 U
1,2-Dichlorobenzene	5	5 U	5 U	5 U	5 U	5 U
1,2-Dibromo-3-chloropropane	10	10 U	10 U	10 U	10 U	10 U

PROJECT: NCBC GULFPORT, MISSISSIPPI — SEMIVOLATILE AQUEOUS ANALYSES (ug/l) — Validation Table

	SAMPLE LOCATION:	GPTHOGW-1	GPTHOGW-1D	GPTHOGW-1DR	GPTHOGW-2	GPTHOGW-3	GPTHOGW-4
	LAB NUMBER:	27176005	27176006	27176006R	27176007	27176008	27176009
	DATE SAMPLED:	05/17/94	05/17/94	05/17/94	05/17/94	05/17/94	05/17/94
	DATE ANALYZED:	05/26/94	05/26/94	06/03/94	06/03/94	06/03/94	06/03/94
	DILUTION FACTOR:	1.0	1.0	1.0	1.0	2.0	1.0
ANALYTE	CRQL						
N-Nitrosodimethylamine	10	10 U	10 R	10 U	10 U	20 U	10 U
Phenol	10	10 U	120 R	10 U	10 U	53	10 U
Aniline	10	10 U	10 R	10 U	10 U	20 U	10 U
bis (2-Chloroethyl) Ether	10	10 U	10 R	10 U	10 U	20 U	10 U
2- Chlorophenol	10	10 U	120 R	10 U	10 U	10 J	10 U
1,3- Dichlorobenzene	10	10 U	10 R	10 U	10 U	20 U	10 U
1,4- Dichlorobenzene	10	10 U	10 R	10 U	10 U	20 U	10 U
Benzyl alcohol	10	10 U	10 R	10 U	10 U	20 U	10 U
1,2- Dichlorobenzene	10	10 U	10 R	10 U	10 U	20 U	10 U
2- Methylphenol	10	10 U	10 R	10 U	10 U	20 U	10 U
bis(2-Chloroisopropyl)ether	10	10 U	10 R	10 U	10 U	20 U	10 U
4-Methylphenol	10	10 U	10 R	10 U	10 U	8 J	10 U
N-Nitroso-Di-n-Propylamine	10	10 U	10 R	10 U	10 U	20 U	10 U
Hexachloroethane	10	10 U	10 R	10 U	10 U	20 U	10 U
Nitrobenzene	10	10 U	10 R	10 U	10 U	20 U	10 U
Isophorone	10	10 U	10 R	10 U	10 U	20 U	10 U
2-Nitrophenol	10	10 U	10 R	10 U	10 U	20 U	10 U
2,4-Dimethylphenol	10	10 U	10 R	10 U	10 U	20 U	10 U
Benzoic acid	50	50 U	50 R	50 U	50 U	13 J	50 U
bis (2-Chloroethoxy) Methane	10	10 U	10 R	10 U	10 U	20 U	10 U
2,4-Dichlorophenol	10	10 U	10 R	10 U	10 U	8 J	10 U
1,2,4-Trichlorobenzene	10	10 U	10 R	10 U	10 U	20 U	10 U
Naphthalene	10	10 U	10 R	10 U	10 U	430	10 U
4-Chloroaniline	10	10 U	10 R	10 U	10 U	20 U	10 U
Hexachlorobutadiene	10	10 U	10 R	10 U	10 U	20 U	10 U
4-Chloro-3-Methylphenol	10	10 U	92 R	10 U	10 U	20 U	10 U
2-Methylnaphthalene	10	10 U	10 R	10 U	10 U	20 U	10 U
Hexachlorocyclopentadiene	10	10 U	10 R	10 U	10 U	20 U	10 U
2,4,6-Trichlorophenol	10	10 U	10 R	10 U	10 U	20 U	10 U
2,4,5-Trichlorophenol	50	50 U	50 R	50 U	50 U	8 J	50 U
2-Chloronaphthalene	10	10 U	10 R	10 U	10 U	20 U	10 U
2-Nitroaniline	50	50 U	50 R	50 U	50 U	100 U	50 U
Dimethylphthalate	10	10 U	10 R	10 U	10 U	20 U	10 U
Acenaphthylene	10	10 U	10 R	10 U	10 U	20 U	10 U
2,6-Dinitrotoluene	10	10 U	10 R	10 U	10 U	20 U	10 U
3-Nitroaniline	50	50 U	50 R	50 U	50 U	100 U	50 U
Acenaphthene	10	10 U	10 R	10 U	10 U	20 U	10 U
2,4-Dinitrophenol	50	50 U	50 R	50 U	50 U	100 U	50 U
4-Nitrophenol	50	50 U	110 R	50 U	50 U	100 U	50 U
Dibenzofuran	10	10 U	10 R	10 U	10 U	20 U	10 U
2,4-Dinitrotoluene	10	10 U	10 R	10 U	10 U	20 U	10 U
Diethylphthalate	10	10 U	10 R	10 U	10 U	20 U	10 U
4-Chlorophenyl-phenylether	10	10 U	10 R	10 U	10 U	20 U	10 U
Fluorene	10	10 U	10 R	10 U	10 U	20 U	10 U
4-Nitroaniline	50	50 U	50 R	50 U	50 U	100 U	50 U
4,6-Dinitro-2-Methylphenol	50	50 U	50 R	50 U	50 U	100 U	50 U
N-Nitrosodiphenylamine	10	10 U	3 R	10 U	10 U	20 U	10 U

PROJECT: NCBC GULFPORT, MISSISSIPPI — SEMIVOLATILE AQUEOUS ANALYSES (ug/l) — Validation Table

	SAMPLE LOCATION:	GPTHOGW-1	GPTHOGW-1D	GPTHOGW-1DR	GPTHOGW-2	GPTHOGW-3	GPTHOGW-4
	LAB NUMBER:	27176005	27176006	27176006R	27176007	27176008	27176009
	DATE SAMPLED:	05/17/94	05/17/94	05/17/94	05/17/94	05/17/94	05/17/94
	DATE ANALYZED:	05/26/94	05/26/94	06/03/94	06/03/94	06/03/94	06/03/94
	DILUTION FACTOR:	1.0	1.0	1.0	1.0	2.0	1.0
ANALYTE	CRQL						
1,2-Diphenylhydrazine	10	10 U	10 R	10 U	10 U	20 U	10 U
4-Bromophenyl-phenylether	10	10 U	10 R	10 U	10 U	20 U	10 U
Hexachlorobenzene	10	10 U	10 R	10 U	10 U	20 U	10 U
Pentachlorophenol	50	50 U	120 R	50 U	50 U	100 U	50 U
Phenanthrene	10	10 U	10 R	10 U	10 U	20 U	10 U
Anthracene	10	10 U	10 R	10 U	10 U	20 U	10 U
Di-n-Butylphthalate	10	10 U	10 R	10 U	10 U	20 U	10 U
Fluoranthene	10	10 U	10 R	10 U	10 U	20 U	10 U
Benzidine	50	50 U	50 R	50 R	50 U	100 R	50 R
Pyrene	10	10 U	3 R	10 U	10 U	20 U	10 U
Butylbenzylphthalate	10	10 U	10 R	10 U	10 U	20 U	10 U
3,3'-Dichlorobenzidine	20	20 U	20 R	20 U	20 U	40 U	20 U
Benzo (a) Anthracene	10	10 U	10 R	10 U	10 U	20 U	10 U
Chrysene	10	10 U	10 R	10 U	10 U	20 U	10 U
bis (2-Ethylhexyl) Phthalate	10	10 U	10 R	10 U	10 U	38	10 U
Di-n-Octyl Phthalate	10	10 U	10 R	10 U	10 U	20 U	10 U
Benzo (b) Fluoranthene	10	10 U	10 R	10 U	10 U	20 U	10 U
Benzo (k) Fluoranthene	10	10 U	10 R	10 U	10 U	20 U	10 U
Benzo (a) Pyrene	10	10 U	10 R	10 U	10 U	20 U	10 U
Indeno (1,2,3-cd) Pyrene	10	10 U	10 R	10 U	10 U	20 U	10 U
Dibenz (a,h) Anthracene	10	10 U	10 R	10 U	10 U	20 U	10 U
Benzo (g,h,i) Perylene	10	10 U	10 R	10 U	10 U	20 U	10 U
2-Picoline	50	50 U	50 R	50 U	50 U	100 U	50 U
Methyl methanesulfonate	10	10 U	10 R	10 U	10 U	20 U	10 U
Ethyl Methansulfonate	10	10 U	10 R	10 U	10 U	20 U	10 U
Acetophenone	10	10 U	10 R	10 U	10 U	20 U	10 U
N-Nitrosopiperidine	10	10 U	10 R	10 U	10 U	20 U	10 U
Phenyl-tert-butlamine	50	50 U	50 R	50 U	50 U	100 U	50 U
2,6-Dichlorophenol	10	10 U	10 R	10 U	10 U	20 U	10 U
N-Nitrosoidi-n-butylamine	10	10 U	10 R	10 U	10 U	20 U	10 U
1,2,4,5-Tetrachlorobenzene	50	50 U	50 R	50 U	50 U	100 U	50 U
Pentachlorobenzene	50	50 U	50 R	50 U	50 U	100 U	50 U
1-Naphthylamine	50	50 U	50 R	50 U	50 U	100 U	50 U
2-Naphthylamine	50	50 U	50 R	50 U	50 U	100 U	50 U
2,3,4,6-Tetrachlorophenol	10	10 U	10 R	10 U	10 U	20 U	10 U
Phenacetin	10	10 U	10 R	10 U	10 U	20 U	10 U
4-Aminobiphenyl	50	50 U	50 R	50 U	50 U	100 U	50 U
Pronamide	10	10 U	10 R	10 U	10 U	20 U	10 U
p-(Dimethylamino)azobenzene	10	10 U	10 R	10 U	10 U	20 U	10 U
7,12Dimethylbenz(a)anthracene	10	10 U	10 R	10 U	10 U	20 U	10 U
3-Methylcholanthrene	10	10 U	10 R	10 U	10 U	20 U	10 U
Pyridine	50	50 U	50 R	50 U	50 U	100 U	50 U
N-Nitrosomethylethylamine	10	10 U	10 R	10 U	10 U	20 U	10 U
N-Nitrosodiethylamine	10	10 U	10 R	10 U	10 U	20 U	10 U
N-Nitrosopyrrolidine	10	10 U	10 R	10 U	10 U	20 U	10 U
N-Nitrosomorpholine	10	10 U	10 R	10 U	10 U	20 U	10 U
o-Toluidine	10	10 U	10 R	10 U	10 U	20 U	10 U

PROJECT: NCBC GULFPORT, MISSISSIPPI

SEMIVOLATILE AQUEOUS ANALYSES (ug/l)

Validation Table

	SAMPLE LOCATION:	GPTHOGW-1	GPTHOGW-1D	GPTHOGW-1DR	GPTHOGW-2	GPTHOGW-3	GPTHOGW-4
	LAB NUMBER:	27176005	27176006	27176006R	27176007	27176008	27176009
	DATE SAMPLED:	05/17/94	05/17/94	05/17/94	05/17/94	05/17/94	05/17/94
	DATE ANALYZED:	05/26/94	05/26/94	06/03/94	06/03/94	06/03/94	06/03/94
	DILUTION FACTOR:	1.0	1.0	1.0	1.0	2.0	1.0
ANALYTE	CRQL						
Hexachloropropene	50	50 U	50 R	50 U	50 U	100 U	50 U
p-Phenylenediamine	50	500 U	500 R	500 U	500 U	1000 U	500 U
Safrole	50	50 U	50 R	50 U	50 U	100 U	50 U
Isosafrole	50	50 U	50 R	50 U	50 U	100 U	50 U
1,4-Napthoquinone	50	1000 U	1000 R	1000 U	1000 U	2000 U	1000 U
1,3-Dinitrobenzene	10	10 U	10 R	10 U	10 U	20 U	10 U
5-Nirtro-o-toluidine	10	10 U	10 R	10 U	10 U	20 U	10 U
1,3,5-Trinitrobenzene	10	10 U	10 R	10 U	10 U	20 U	10 U
4-Nitroquinoline-1-oxide	10	500 U	500 R	500 U	500 U	1000 U	500 U
Methapyrilene	50	50 U	50 R	50 U	50 U	100 U	50 U
Aramite	50	50 U	50 R	50 U	50 U	100 U	50 U
3,3'-Dimethylbenzidine	10	10 U	10 R	10 U	10 U	20 UJ	10 UJ
Hexachlorophene	50	500 R	500 R	500 R	500 R	1000 R	500 R
2-Acetylaminofluorene	10	10 U	10 R	10 U	10 U	20 U	10 U
Pentachloronitrobenzene	50	50 U	50 R	50 U	50 U	100 U	50 U

PROJECT: NCBC GULFPORT, MISSISSIPPI — POLYNUCLEAR AROMATIC HYDROCARBONS AQUEOUS ANALYSES (ug/l) — Validation Table

SAMPLE LOCATION:	GPTHOGW-1	GPTHOGW-1RE	GPTHOGW-1D	GPTHOGW-1DRE	GPTHOGW-2	GPTHOGW-2RE	GPTHOGW-3
LAB NUMBER:	27176005	27176005-RE	27176006	27176006-RE	27176007	27176007-RE	27176008
DATE SAMPLED:	05/17/94	05/17/94	05/17/94	05/17/94	05/17/94	05/17/94	05/17/94
DATE ANALYZED:	05/31/94	06/01/94	05/31/94	06/01/94	05/31/94	06/01/94	05/31/94
ANALYTE							
Naphthalene	56 R	2.0 U	61 R	2.0 U	63 R	2.0 U	52 R
Acenaphthylene	69 R	2.0 U	66 R	2.0 U	72 R	2.0 U	59 R
Acenaphthene	70 R	2.0 U	71 R	2.0 U	74 R	2.0 U	66 R
Fluorene	77 R	1.0 U	74 R	1.0 U	77 R	1.0 U	72 R
Phenanthrene	91 R	1.0 U	87 R	1.0 U	90 R	1.0 U	86 R
Anthracene	61 R	0.20 U	58 R	0.20 U	61 R	0.20 U	86 R
Fluoranthene	8.5 R	0.20 U	7.9 R	0.20 U	8.3 R	0.20 U	7.9 R
Pyrene	9.2 R	2.0 U	8.5 R	2.0 U	8.7 R	2.0 U	8.2 R
Benzo(a)anthracene	8.4 R	0.20 U	7.5 R	0.20 U	8.1 R	0.20 U	7.6 R
Chrysene	8.4 R	2.0 U	7.2 R	2.0 U	7.9 R	2.0 U	8.4 R
Benzo(b)fluoranthene	8.5 R	0.10 U	7.6 R	0.10 U	8.1 R	0.10 U	7.7 R
Benzo(k)fluoranthene	4.0 R	0.10 U	3.6 R	0.10 U	3.9 R	0.10 U	3.6 R
Benzo(a)pyrene	8.3 R	0.10 U	7.7 R	0.10 U	8.1 R	0.10 U	7.3 R
Dibenzo(a,h)anthracene	9.6 R	0.20 U	8.9 R	0.20 U	9.6 R	0.20 U	9.2 R
Indeno(1,2,3-cd)pyrene	10 R	0.20 U	9.6 R	0.20 U	10 R	0.20 U	9.7 R
Benzo(g,h,i)perylene	8.7 R	0.20 U	8.0 R	0.20 U	8.6 R	0.20 U	8.1 R

PROJECT: NCBC GULFPORT, MISSISSIPPI — POLYNUCLEAR AROMATIC HYDROCARBONS AQUEOUS ANALYSES (ug/l) — Validation Table

SAMPLE LOCATION:	GPTHOGW-3RE	GPTHOGW-4	GPTHOGW-4RE
LAB NUMBER:	27176008-RE	27176009	27176009-RE
DATE SAMPLED:	05/17/94	05/17/94	05/17/94
DATE ANALYZED:	06/01/94	05/31/94	06/01/94
ANALYTE			
Naphthalene	2.0 U	60 R	2.0 U
Acenaphthylene	2.0 U	68 R	2.0 U
Acenaphthene	2.0 U	69 R	2.0 U
Fluorene	1.0 U	75 R	1.0 U
Phenanthrene	1.0 U	89 R	1.0 U
Anthracene	0.20 U	60 R	0.20 U
Fluoranthene	0.20 U	8.3 R	0.20 U
Pyrene	2.0 U	8.8 R	2.0 U
Benzo(a)anthracene	0.20 U	8.2 R	0.20 U
Chrysene	2.0 U	8.6 R	2.0 U
Benzo(b)fluoranthene	0.10 U	8.0 R	0.10 U
Benzo(k)fluoranthene	0.10 U	3.8 R	0.10 U
Benzo(a)pyrene	0.10 U	8.0 R	0.10 U
Dibenzo(a,h)anthracene	0.20 U	9.2 R	0.20 U
Indeno(1,2,3-cd)pyrene	0.20 U	10 R	0.20 U
Benzo(g,h,i)perylene	0.20 U	8.4 R	0.20 U

PROJECT: NCBC GULFPORT, MISSISSIPPI — PESTICIDE/PCB AQUEOUS ANALYSES (ug/l) — Validation Table

	SAMPLE LOCATION:	GPTHOGW-1	GPTHOGW-1D	GPTHOGW-2	GPTHOGW-3	GPTHOGW-4
	LAB NUMBER:	27176005	27176006	27176007	27176008	27176009
	DATE SAMPLED:	05/17/94	05/17/94	05/17/94	05/17/94	05/17/94
	DATE ANALYZED:	05/26/94	05/26/94	05/26/94	05/27/94	05/27/94
	DILUTION:	1.0	1.0	1.0	1.0	1.0
ANALYTE	PQL					
alpha-BHC	0.05	0.020 U	0.020 U	0.020 U	0.020 U	0.020 U
beta-BHC	0.05	0.040 U	0.040 U	0.040 U	0.040 U	0.040 U
delta-BHC	0.05	0.020 U	0.020 U	0.020 U	0.020 U	0.020 U
gamma-BHC (Lindane)	0.05	0.020 U	0.020 U	0.020 U	0.020 U	0.020 U
Heptachlor	0.05	0.020 U	0.020 U	0.020 U	0.020 U	0.020 U
Aldrin	0.05	0.020 U	0.020 U	0.020 U	0.020 U	0.020 U
Heptachlor Epoxide	0.05	0.020 U	0.020 U	0.020 U	0.020 U	0.020 U
Endosulfan I	0.10	0.020 U	0.020 U	0.020 U	0.020 U	0.020 U
Dieldrin	0.10	0.020 U	0.020 U	0.020 U	0.020 U	0.020 U
4,4'- DDE	0.10	0.040 U	0.040 U	0.040 U	0.040 U	0.040 U
Endrin	0.10	0.040 U	0.040 U	0.040 U	0.040 U	0.040 U
Endosulfan II	0.10	0.040 U	0.040 U	0.040 U	0.040 U	0.040 U
4,4'- DDD	0.10	0.040 U	0.040 U	0.040 U	0.040 U	0.040 U
Endrin Aldehyde	0.10	0.040 U	0.040 U	0.040 U	0.040 U	0.040 U
Endosulfan Sulfate	0.10	0.040 U	0.040 U	0.040 U	0.040 U	0.040 U
4,4'- DDT	0.10	0.040 U	0.040 U	0.040 U	0.040 U	0.040 U
Methoxychlor	0.50	0.080 U	0.080 U	0.080 U	0.080 U	0.080 U
Endrin Ketone	0.10	0.040 U	0.040 U	0.040 U	0.040 U	0.040 U
Chlordane	0.5	0.20 U	0.20 U	0.20 U	0.20 U	0.20 U
Toxaphene	1.0	1.0 U	1.0 U	1.0 U	1.0 U	1.0 U
Aroclor-1016	0.8	1.0 U	1.0 U	1.0 U	1.0 U	1.0 U
Aroclor-1221	2.0	2.0 U	2.0 U	2.0 U	2.0 U	2.0 U
Aroclor-1232	2.0	2.0 U	2.0 U	2.0 U	2.0 U	2.0 U
Aroclor-1242	0.8	1.0 U	1.0 U	1.0 U	1.0 U	1.0 U
Aroclor-1248	0.5	1.0 U	1.0 U	1.0 U	1.0 U	1.0 U
Aroclor-1254	1.0	0.50 U	0.50 U	0.50 U	0.50 U	0.50 U
Aroclor-1260	1.0	0.50 U	0.50 U	0.50 U	0.50 U	0.50 U
Chlorobenzilate	0.50	0.50 U	0.50 U	0.50 U	0.50 U	0.50 U
Diallate	1.0	1.0 U	1.0 U	1.0 U	1.0 U	1.0 U
Isodrin	0.02	0.020 U	0.020 U	0.020 U	0.020 U	0.020 U
Kepone	1.0	1.0 U	1.0 U	1.0 U	1.0 U	1.0 U

PROJECT: NCBC GULFPORT, MISSISSIPPI — ORGANOPHOSPHORUS PESTICIDE AQUEOUS ANALYSIS (ug/l) — Validation Table

	SAMPLE LOCATION:	GPTHOGW-1	GPTHOGW-1D	GPTHOGW-2	GPTHOGW-3	GPTHOGW-4
	LAB NUMBER:	27176005	27176006	27176007	27176008	27176009
	DATE SAMPLED:	05/17/94	05/17/94	05/17/94	05/17/94	05/17/94
	DATE ANALYZED:	06/01/94	06/01/94	06/01/94	06/01/94	06/01/94
ANALYTE	PQL					
Triethylphosphorothioate	1.0	1.0 U	1.0 U	1.0 U	1.0 U	1.0 U
Thionazin	1.0	1.0 U	1.0 U	1.0 U	1.0 U	1.0 U
Phorate	1.0	1.0 U	1.0 U	1.0 U	1.0 U	1.0 U
Sulfotepp	1.0	1.0 U	1.0 U	1.0 U	1.0 U	1.0 U
Dimethoate	5.0	2.0 U	2.0 U	2.0 U	2.0 U	2.0 U
Disulfoton	1.0	1.0 U	1.0 U	1.0 U	1.0 U	1.0 U
Methyl Parathion	1.0	1.0 U	1.0 U	1.0 U	1.0 U	1.0 U
Ethyl Parathion	1.0	1.0 U	1.0 U	1.0 U	1.0 U	1.0 U
Famphur	1.0	1.0 U	1.0 U	1.0 U	1.0 U	1.0 U

PROJECT: NCBC GULFPORT, MISSISSIPPI — HERBICIDE AQUEOUS ANALYSES (ug/l) — Validation Table

	SAMPLE LOCATION:	GPTHOGW-1	GPTHOGW-1D	GPTHOGW-2	GPTHOGW-3	GPTHOGW-4
	LAB NUMBER:	27176005	27176006	27176007	27176008	27176009
	DATE SAMPLED:	05/17/94	05/17/94	05/17/94	05/17/94	05/17/94
	DATE ANALYZED:	05/24/94	05/24/94	05/24/94	05/24/94	05/24/94
ANALYTE	PQL					
2,4-D	2.5	2.5 U	2.5 U	2.5 U	2.5 U	2.5 U
2,4,5-T	0.5	0.5 U	0.5 U	1.5	2.7	0.5 U
2,4,5-TP	0.5	0.5 U	0.5 U	0.5 U	0.5 U	0.5 U
Dinoseb	2.5	0.5 U	0.5 U	0.5 U	0.5 U	0.5 U

PROJECT: NCBC GULFPORT, MISSISSIPPI — DIOXIN/FURANS AQUEOUS ANALYSES (pg/l) — Validation Table

	SAMPLE LOCATION:	GPTHOGW-1	GPTHOGW-1D	GPTHOGW-2	GPTHOGW-3	GPTHOGW-4
	LAB NUMBER:	9405219-04	9405219-07	9405219-08	9405219-09	9405219-10
	DATE SAMPLED:	05/17/94	05/17/94	05/17/94	05/17/94	05/17/94
	DATE ANALYZED:	05/28/94	05/28/94	05/28/94	05/28/94	05/28/94
ANALYTE						
2,3,7,8-TCDD		0.26 U	0.43 U	13.8 U	0.40 U	0.24 U
2,3,7,8-TCDF		0.18 U	0.24 U	2.35 U	0.23 U	0.21 U
1,2,3,7,8-PeCDD		0.50 U	0.79 UJ	1.63 U	0.41 U	0.48 UJ
1,2,3,7,8-PeCDF		0.16 U	0.29 U	2.07 UJ	0.23 U	0.22 U
2,3,4,7,8-PeCDF		0.20 U	0.30 UJ	1.49 U	0.19 U	0.22 U
1,2,3,4,7,8-HxCDD		0.34 U	0.62 U	1.40 U	0.28 U	0.31 U
1,2,3,6,7,8-HxCDD		0.28 U	0.54 U	1.98 U	0.35 U	0.34 U
1,2,3,7,8,9-HxCDD		0.34 U	0.47 U	2.30 U	0.43 U	0.27 U
1,2,3,4,7,8-HxCDF		0.18 U	0.42 U	0.69 U	0.17 U	4.30 (MPC)
1,2,3,6,7,8-HxCDF		0.16 U	0.47 U	0.77 U	0.19 U	0.16 U
2,3,4,6,7,8-HxCDF		0.23 U	0.34 U	1.81 U	0.15 U	0.19 U
1,2,3,7,8,9-HxCDF		0.30 U	0.38 U	1.16 U	0.40 U	0.23 U
1,2,3,4,6,7,8-HpCDD		0.55 U	2.25 U	2.36 U	2.05 U	7.28 (MPC)
1,2,3,4,6,7,8-HpCDF		0.39 U	0.27 U	0.45 U	0.43 U	0.32 U
1,2,3,4,7,8,9-HpCDF		0.33 U	0.47 U	1.31 U	0.26 U	0.30 U
OCDD		133	215 (MPC)	215	116	59.6
OCDF		0.72 U	1.10 U	5.44 U	1.15 U	0.51 U

PROJECT: NCBC GULFPORT, MISSISSIPPI — INORGANIC AQUEOUS ANALYSES (ug/l) — Validation Table

ANALYTE	CRQL	GPTHOGW-1	GPTHOGW-1D	GPTHOGW-2	GPTHOGW-3	GPTHOGW-4
SAMPLE LOCATION:		GPTHOGW-1	GPTHOGW-1D	GPTHOGW-2	GPTHOGW-3	GPTHOGW-4
LAB NUMBER:		M2717605	M2717606	M2717607	M2717608	M2717609
DATE SAMPLED:		05/17/94	05/17/94	05/17/94	05/17/94	05/17/94
Antimony	60	15.7 U	15.7 U	15.7 U	15.7 U	15.7 U
Arsenic	10	19.2 J	26.9 J	9.2 J	35.4 J	12.7 J
Barium	200	166 J	198 J	123 J	174 J	238
Beryllium	5	1.2 J	1.7 J	1.2 J	5.5	1.4 J
Cadmium	5	2.7 U	2.7 U	2.7 U	2.7 U	2.7 U
Chromium	10	26.6	56.3	30.7	83.5	81.0
Cobalt	50	12.1 J	22.2 J	5.2 J	30.1 J	12.9 J
Copper	25	24.1 U	24.1 U	23.4 U	24.1 U	24.1 U
Lead	3	19.8 J	25.5 J	14.3 J	28.4 J	36.8 J
Mercury	0.2	0.10 J	0.08 U	0.24	0.51	0.50
Nickel	40	37.0 J	52.5	23.0 J	79.2	35.0 J
Selenium	5	0.79 UJ	0.83 J	1.4 J	8.4 J	13.9 J
Silver	10	3.4 J	2.7 U	2.7 U	2.7 U	2.7 U
Thallium	10	1.1 UJ	1.1 UJ	1.1 UJ	1.1 UJ	1.1 UJ
Vanadium	50	49.1 J	74.7	42.6 J	153	122
Zinc	20	87.9	93.3	42.9	41.1	24.9
Tin	200	9.5 U	9.5 U	9.5 U	9.5 U	9.5 U
Cyanide	10	0.81 UJ	0.81 UJ	1.0 J	255 J	51.2 J
Sulfide	100	1.0	1.7	<0.1	9.3	9.2

Validated Quality Assurance and Quality Control Results

PROJECT: NCBC GULFPORT, MISSISSIPPI

VOLATILE AQUEOUS ANALYSES (ug/l)

Validation Table

	SAMPLE LOCATION:	BS-01-DI	BS-01-PI	BS-01-RI	BS-01-TB
	LAB NUMBER:	27176001	27176002	27176003	27176004
	DATE SAMPLED:	05/17/94	05/17/94	05/17/94	05/17/94
	DATA ANALYZED:	05/23/94	05/23/94	05/23/94	05/23/94
	DILUTION FACTOR:	1.0	1.0	1.0	1.0
ANALYTE	CRQL				
Chloromethane	10	10 U	10 U	10 U	10 U
Bromomethane	10	10 U	10 U	10 U	10 U
Vinyl Chloride	10	10 U	10 U	10 U	10 U
Chloroethane	10	10 U	10 U	10 U	10 U
Methylene Chloride	5	5 U	10 U	2 J	1 J
Acetone	10	38	7 J	14	8 J
Carbon Disulfide	5	5 U	5 U	5 U	5 U
1,1-Dichloroethene	5	5 U	5 U	5 U	5 U
1,1-Dichloroethane	5	5 U	5 U	5 U	5 U
1,2-Dichloroethene (total)	5	5 U	5 U	5 U	5 U
Chloroform	5	5 U	1 J	5 U	5 U
1,2-Dichloroethane	5	5 U	5 U	5 U	5 U
2-Butanone	10	10 U	10 U	10 U	10 U
1,1,1-Trichloroethane	5	5 U	5 U	5 U	5 U
Carbon Tetrachloride	5	5 U	5 U	5 U	5 U
Bromodichloromethane	5	5 U	5 U	5 U	5 U
1,2-Dichloropropane	5	5 U	5 U	5 U	5 U
cis-1,3-Dichloropropene	5	5 U	5 U	5 U	5 U
Trichloroethene	5	5 U	5 U	5 U	5 U
Dibromochloromethane	5	5 U	5 U	5 U	5 U
1,1,2-Trichloroethane	5	5 U	5 U	5 U	5 U
Benzene	5	5 U	5 U	5 U	5 U
trans-1,3-Dichloropropene	5	5 U	5 U	5 U	5 U
Bromoform	5	5 U	5 U	5 U	5 U
4-Methyl-2-Pentanone	10	10 U	10 U	10 U	10 U
2-Hexanone	10	10 U	10 U	10 U	10 U
Tetrachloroethene	5	5 U	5 U	5 U	5 U
1,1,2,2-Tetrachloroethane	5	5 U	5 U	5 U	5 U
Toluene	5	5 U	5 U	5 U	5 U
Chlorobenzene	5	5 U	5 U	5 U	5 U
Ethylbenzene	5	5 U	5 U	5 U	5 U
Styrene	5	5 U	5 U	5 U	5 U
Xylene (total)	5	5 U	5 U	5 U	5 U
Dichlorodifluoromethane	10	10 U	10 U	10 U	10 U
Trichlorofluoromethane	5	5 U	5 U	5 U	5 U
Acrolein	100	100 U	100 U	100 U	100 U
Iodomethane	10	10 U	10 U	10 U	10 U
Acrylonitrile	100	100 U	100 U	100 U	100 U
Vinyl acetate	10	10 U	10 U	10 U	10 U
Dibromomethane	5	5 U	5 U	5 U	5 U
2-Chloroethyl vinyl ether	10	10 U	10 U	10 U	10 U
Ethyl methacrylate	5	5 U	5 U	5 U	5 U
1,2,3-Trichloropropene	5	5 U	5 U	5 U	5 U
trans-1,4-Dichloro-2-butene	5	5 U	5 U	5 U	5 U

PROJECT: NCBC GULFPORT, MISSISSIPPI

VOLATILE AQUEOUS ANALYSES (ug/l)

Validation Table

SAMPLE LOCATION:		BS-01-DI	BS-01-PI	BS-01-RI	BS-01-TB
LAB NUMBER:		27176001	27176002	27176003	27176004
DATE SAMPLED:		05/17/94	05/17/94	05/17/94	05/17/94
DATA ANALYZED:		05/23/94	05/23/94	05/23/94	05/23/94
DILUTION FACTOR:		1.0	1.0	1.0	1.0
	CRQL				
Acetonitrile	100	34 J	100 U	100 U	100 U
3-Chloropropene	5	5 U	5 U	5 U	5 U
Chloroprene	200	200 U	200 U	200 U	200 U
Propionitrile	100	100 U	100 U	100 U	100 U
Methacrylonitrile	5	5 U	5 U	5 U	5 U
Isobutyl alcohol	200	200 R	200 R	200 R	200 R
Methyl methacrylate	10	10 U	10 U	10 U	10 U
1,4-Dioxane	200	200 R	200 R	200 R	200 R
1,2-Dibromoethane	5	5 U	5 U	5 U	5 U
1,1,1,2-Tetrachloroethane	5	5 U	5 U	5 U	5 U
Pentachloroethane	10	10 U	10 U	10 U	10 U
1,3-Dichlorobenzene	5	5 U	5 U	5 U	5 U
1,4-Dichlorobenzene	5	5 U	5 U	5 U	5 U
1,2-Dichlorobenzene	5	5 U	5 U	5 U	5 U
1,2-Dibromo-3-chloropropane	10	10 U	10 U	10 U	10 U

PROJECT: NCBC GULFPORT, MISSISSIPPI — SEMIVOLATILE AQUEOUS ANALYSES (ug/l) — Validation Table

	SAMPLE LOCATION:	BS-01-DI	BS-01-PI	BS-01-PIRE	BS-01-RI
	LAB NUMBER:	27176001	27176002	27176002RE	27176003
	DATE SAMPLED:	05/17/94	05/17/94	05/17/94	05/17/94
	DATE ANALYZED:	05/26/94	05/26/94	06/06/94	05/26/94
	DILUTION FACTOR:	1.0	1.0	1.0	1.0
ANALYTE	CRQL				
N-Nitrosodimethylamine	10	10 U	10 U	10 R	10 U
Phenol	10	10 U	10 R	10 R	10 U
Aniline	10	10 U	10 U	10 R	10 U
bis (2-Chloroethyl) Ether	10	10 U	10 U	10 R	10 U
2- Chlorophenol	10	10 U	10 U	10 R	10 U
1,3- Dichlorobenzene	10	10 U	10 U	10 R	10 U
1,4- Dichlorobenzene	10	10 U	10 U	10 R	10 U
Benzyl alcohol	10	10 U	10 R	10 R	10 U
1,2- Dichlorobenzene	10	10 U	10 U	10 R	10 U
2- Methylphenol	10	10 U	10 R	10 R	10 U
bis(2-Chloroisopropyl)ether	10	10 U	10 U	10 R	10 U
4-Methylphenol	10	10 U	10 U	10 R	10 U
N-Nitroso-Di-n-Propylamine	10	10 U	10 U	10 R	10 U
Hexachloroethane	10	10 U	10 U	10 R	10 U
Nitrobenzene	10	10 U	10 U	10 R	10 U
Isophorone	10	10 U	10 U	10 R	10 U
2-Nitrophenol	10	10 U	10 R	10 R	10 U
2,4-Dimethylphenol	10	10 U	10 R	10 R	10 U
Benzoic acid	50	50 U	50 R	50 R	50 U
bis (2-Chloroethoxy) Methane	10	10 U	10 U	10 R	10 U
2,4-Dichlorophenol	10	10 U	10 R	10 R	10 U
1,2,4-Trichlorobenzene	10	10 U	10 U	10 R	10 U
Naphthalene	10	10 U	10 U	10 R	10 U
4-Chloroaniline	10	10 U	10 U	10 R	10 U
Hexachlorobutadiene	10	10 U	10 U	10 R	10 U
4-Chloro-3-Methylphenol	10	10 U	10 U	10 R	10 U
2-Methylnaphthalene	10	10 U	10 U	10 R	10 U
Hexachlorocyclopentadiene	10	10 U	10 U	10 R	10 U
2,4,6-Trichlorophenol	10	10 U	10 R	10 R	10 U
2,4,5-Trichlorophenol	50	50 U	50 R	50 R	50 U
2-Chloronaphthalene	10	10 U	10 U	10 R	10 U
2-Nitroaniline	50	50 U	50 U	50 R	50 U
Dimethylphthalate	10	10 U	10 U	10 R	10 U
Acenaphthylene	10	10 U	10 U	10 R	10 U
2,6-Dinitrotoluene	10	10 U	10 U	10 R	10 U
3-Nitroaniline	50	50 U	50 U	50 R	50 U
Acenaphthene	10	10 U	10 U	10 R	10 U
2,4-Dinitrophenol	50	50 U	50 R	50 R	50 U
4-Nitrophenol	50	50 U	50 R	50 R	50 U
Dibenzofuran	10	10 U	10 U	10 R	10 U
2,4-Dinitrotoluene	10	10 U	10 U	10 R	10 U
Diethylphthalate	10	10 U	10 U	10 R	10 U
4-Chlorophenyl-phenylether	10	10 U	10 U	10 R	10 U
Fluorene	10	10 U	10 U	10 R	10 U
4-Nitroaniline	50	50 U	50 U	50 R	50 U
4,6-Dinitro-2-Methylphenol	50	50 U	50 R	50 R	50 U
N-Nitrosodiphenylamine	10	10 U	2 J	2 R	10 U

PROJECT: NCBC GULFPORT, MISSISSIPPI

SEMIVOLATILE AQUEOUS ANALYSES (ug/l)

	SAMPLE LOCATION:	BS-01-DI	BS-01-PI	BS-01-PIRE	BS-01-RI
	LAB NUMBER:	27176001	27176002	27176002RE	27176003
	DATE SAMPLED:	05/17/94	05/17/94	05/17/94	05/17/94
	DATE ANALYZED:	05/26/94	05/26/94	06/06/94	05/26/94
	DILUTION FACTOR:	1.0	1.0	1.0	1.0
ANALYTE	CRQL				
1,2-Diphenylhydrazine	10	10 U	10 U	10 R	10 U
4-Bromophenyl-phenylether	10	10 U	10 U	10 R	10 U
Hexachlorobenzene	10	10 U	10 U	10 R	10 U
Pentachlorophenol	50	50 U	50 R	50 R	50 U
Phenanthrene	10	10 U	10 U	10 R	10 U
Anthracene	10	10 U	10 U	10 R	10 U
Di-n-Butylphthalate	10	10 U	10 U	10 R	10 U
Fluoranthene	10	10 U	10 U	10 R	10 U
Benzidine	50	50 U	50 U	50 R	50 U
Pyrene	10	10 U	10 U	10 R	10 U
Butylbenzylphthalate	10	10 U	10 U	10 R	10 U
3,3'-Dichlorobenzidine	20	20 U	20 U	20 R	20 U
Benzo (a) Anthracene	10	10 U	10 U	10 R	10 U
Chrysene	10	10 U	10 U	10 R	10 U
bis (2-Ethylhexyl) Phthalate	10	10 U	10 U	10 R	10 U
Di-n-Octyl Phthalate	10	10 U	10 U	10 R	10 U
Benzo (b) Fluoranthene	10	10 U	10 U	10 R	10 U
Benzo (k) Fluoranthene	10	10 U	10 U	10 R	10 U
Benzo (a) Pyrene	10	10 U	10 U	10 R	10 U
Indeno (1,2,3-cd) Pyrene	10	10 U	10 U	10 R	10 U
Dibenz (a,h) Anthracene	10	10 U	10 U	10 R	10 U
Benzo (g,h,i) Perylene	10	10 U	10 U	10 R	10 U
2-Picoline	50	50 U	50 U	50 R	50 U
Methyl methanesulfonate	10	10 U	10 U	10 R	10 U
Ethyl Methansulfonate	10	10 U	10 U	10 R	10 U
Acetophenone	10	10 U	10 U	10 R	10 U
N-Nitrosopiperidine	10	10 U	10 U	10 R	10 U
Phenyl-tert-butlamine	50	50 U	50 U	50 R	50 U
2,6-Dichlorophenol	10	10 U	10 U	10 R	10 U
N-Nitrosoidi-n-butylamine	10	10 U	10 U	10 R	10 U
1,2,4,5-Tetrachlorobenzene	50	50 U	50 U	50 R	50 U
Pentachlorobenzene	50	50 U	50 U	50 R	50 U
1-Naphthylamine	50	50 U	50 U	50 R	50 U
2-Naphthylamine	50	50 U	50 U	50 R	50 U
2,3,4,6-Tetrachlorophenol	10	10 U	10 U	10 R	10 U
Phenacetin	10	10 U	10 U	10 R	10 U
4-Aminobiphenyl	50	50 U	50 U	50 R	50 U
Pronamide	10	10 U	10 U	10 R	10 U
p-(Dimethylamino)azobenzene	10	10 U	10 U	10 R	10 U
7,12Dimethylbenz(a)anthracene	10	10 U	10 U	10 R	10 U
3-Methylcholanthrene	10	10 U	10 U	10 R	10 U
Pyridine	50	50 U	50 U	50 R	50 U
N-Nitrosomethylethylamine	10	10 U	10 U	10 R	10 U
N-Nitrosodiethylamine	10	10 U	10 U	10 R	10 U
N-Nitrosopyrrolidine	10	10 U	10 U	10 R	10 U
N-Nitrosomorpholine	10	10 U	10 U	10 R	10 U
o-Toluidine	10	10 U	10 U	10 R	10 U

PROJECT: NCBC GULFPORT, MISSISSIPPI

SEMIVOLATILE AQUEOUS ANALYSES (ug/l)

	SAMPLE LOCATION:	BS-01-DI	BS-01-PI	BS-01-PIRE	BS-01-RI
	LAB NUMBER:	27176001	27176002	27176002RE	27176003
	DATE SAMPLED:	05/17/94	05/17/94	05/17/94	05/17/94
	DATE ANALYZED:	05/26/94	05/26/94	06/06/94	05/26/94
	DILUTION FACTOR:	1.0	1.0	1.0	1.0
ANALYTE	CRQL				
Hexachloropropene	50	50 U	50 U	50 R	50 U
p-Phenylenediamine	50	500 U	500 U	500 R	500 U
Safrole	50	50 U	50 U	50 R	50 U
Isosafrole	50	50 U	50 U	50 R	50 U
1,4-Napthoquinone	50	1000 U	1000 U	1000 R	1000 U
1,3-Dinitrobenzene	10	10 U	10 U	10 R	10 U
5-Nirtro-o-toluidine	10	10 U	10 U	10 R	10 U
1,3,5-Trinitrobenzene	10	10 U	10 U	10 R	10 U
4-Nitroquinoline-1-oxide	10	500 U	500 U	500 R	500 U
Methapyrilene	50	50 U	50 U	50 R	50 U
Aramite	50	50 U	50 U	50 R	50 U
3,3'-Dimethylbenzidine	10	10 U	10 U	10 R	10 U
Hexachlorophene	50	500 R	500 R	500 R	500 R
2-Acetylaminofluorene	10	10 U	10 U	10 R	10 U
Pentachloronitrobenzene	50	50 U	50 U	50 R	50 U

PROJECT: NCBC GULFPORT, MISSISSIPPI

POLYNUCLEAR AROMATIC HYDROCARBONS AQUEOUS ANALYSES (ug/l)

Validation Table

SAMPLE LOCATION:	BS-01-DI	BS-01-DIRE	BS-01-PI	BS-01-PIRE	BS-01-RI	BS-01-RIRE
LAB NUMBER:	27176001	27176001-RE	27176002	27176002-RE	27176003	27176003-RE
DATE SAMPLED:	05/17/94	05/17/94	05/17/94	05/17/94	05/17/94	05/17/94
DATE ANALYZED:	05/31/94	06/01/94	05/31/94	06/01/94	05/31/94	06/01/94
ANALYTE						
Naphthalene	65 R	2.0 U	59 R	2.0 U	56 R	2.0 U
Acenaphthylene	73 R	2.0 U	63 R	2.0 U	68 R	2.0 U
Acenaphthene	75 R	2.0 U	70 R	2.0 U	69 R	2.0 U
Fluorene	79 R	1.0 U	75 R	1.0 U	74 R	1.0 U
Phenanthrene	93 R	1.0 U	90 R	1.0 U	87 R	1.0 U
Anthracene	63 R	0.20 U	50 R	0.20 U	60 R	0.20 U
Fluoranthene	8.8 R	0.20 U	8.5 R	0.20 U	8.3 R	0.20 U
Pyrene	9.6 R	2.0 U	8.9 R	2.0 U	8.9 R	2.0 U
Benzo(a)anthracene	9.0 R	0.20 U	8.4 R	0.20 U	8.7 R	0.20 U
Chrysene	8.8 R	2.0 U	9.4 R	2.0 U	8.7 R	2.0 U
Benzo(b)fluoranthene	9.1 R	0.10 U	9.2 R	0.10 U	8.9 R	0.10 U
Benzo(k)fluoranthene	4.3 R	0.10 U	4.3 R	0.10 U	4.2 R	0.10 U
Benzo(a)pyrene	9.3 R	0.10 U	0.83 R	0.10 U	8.9 R	0.10 U
Dibenzo(a,h)anthracene	10 R	0.20 U	9.8 R	0.20 U	9.6 R	0.20 U
Indeno(1,2,3-cd)pyrene	11 R	0.20 U	11 R	0.20 U	11 R	0.20 U
Benzo(g,h,i)perylene	9.1 R	0.20 U	8.6 R	0.20 U	8.7 R	0.20 U

PROJECT: NCBC GULFPORT, MISSISSIPPI

PESTICIDE/PCB AQUEOUS ANALYSES (ug/l)

Validation Table

	SAMPLE LOCATION:	BS-01-DI	BS-01-PI	BS-01-RI
	LAB NUMBER:	27176001	27176002	37909003
	DATE SAMPLED:	05/17/94	05/17/94	04/19/94
	DATE ANALYZED:	05/26/94	05/26/94	04/26/94
	DILUTION:	1.0	2.0	1.0
ANALYTE	PQL			
alpha-BHC	0.05	0.020 U	0.040 U	0.020 U
beta-BHC	0.05	0.040 U	0.080 U	0.040 U
delta-BHC	0.05	0.020 U	0.040 U	0.020 U
gamma-BHC (Lindane)	0.05	0.020 U	0.040 U	0.020 U
Heptachlor	0.05	0.020 U	0.040 U	0.020 U
Aldrin	0.05	0.020 U	0.040 U	0.020 U
Heptachlor Epoxide	0.05	0.020 U	0.040 U	0.020 U
Endosulfan I	0.10	0.020 U	0.040 U	0.020 U
Dieldrin	0.10	0.020 U	0.040 U	0.020 U
4,4'- DDE	0.10	0.040 U	0.040 U	0.040 U
Endrin	0.10	0.040 U	0.080 U	0.040 U
Endosulfan II	0.10	0.040 U	0.080 U	0.040 U
4,4'- DDD	0.10	0.040 U	0.080 U	0.040 U
Endrin Aldehyde	0.10	0.040 U	0.080 U	0.040 U
Endosulfan Sulfate	0.10	0.040 U	0.080 U	0.040 U
4,4'- DDT	0.10	0.040 U	0.61	0.040 U
Methoxychlor	0.50	0.080 U	0.16 U	0.080 U
Endrin Ketone	0.10	0.040 U	0.080 U	0.040 U
Chlordane	0.5	0.20 U	0.40 U	0.20 U
Toxaphene	1.0	1.0 U	2.0 U	1.0 U
Aroclor-1016	0.8	1.0 U	2.0 U	1.0 U
Aroclor-1221	2.0	2.0 U	4.0 U	2.0 U
Aroclor-1232	2.0	2.0 U	4.0 U	2.0 U
Aroclor-1242	0.8	1.0 U	2.0 U	1.0 U
Aroclor-1248	0.5	1.0 U	2.0 U	1.0 U
Aroclor-1254	1.0	0.50 U	1.0 U	0.50 U
Aroclor-1260	1.0	0.50 U	1.0 U	0.50 U
Chlorobenzilate	0.50	0.50 U	1.0 U	0.50 U
Diallate	1.0	1.0 U	2.0 U	1.0 U
Isodrin	0.02	0.020 U	0.040 U	0.020 U
Kepone	1.0	1.0 U	1.0 U	1.0 U

PROJECT: NCBC GULFPORT, MISSISSIPPI — ORGANOPHOSPHORUS PESTICIDE AQUEOUS ANALYSIS (ug/l) — Validation Table

	SAMPLE LOCATION:	BS-01-DI	BS-01-PI	BS-01-PIRE	BS-01-RI
	LAB NUMBER:	27176001	27176002	27176002RE	27176003
	DATE SAMPLED:	05/17/94	05/17/94	05/17/94	05/17/94
	DATE ANALYZED:	06/01/94	06/01/94	06/02/94	06/01/94
ANALYTE	PQL				
Triethylphosphorothioate	1.0	1.0 U	1.0 UJ	1.0 UJ	1.0 U
Thionazin	1.0	1.0 U	1.0 UJ	1.0 UJ	1.0 U
Phorate	1.0	1.0 U	1.0 UJ	1.0 UJ	1.0 U
Sulfotepp	1.0	1.0 U	1.0 UJ	1.0 UJ	1.0 U
Dimethoate	5.0	2.0 U	2.0 UJ	2.0 UJ	2.0 U
Disulfoton	1.0	1.0 U	1.0 UJ	1.0 UJ	1.0 U
Methyl Parathion	1.0	1.0 U	1.0 UJ	1.0 UJ	1.0 U
Ethyl Parathion	1.0	1.0 U	1.0 UJ	1.0 UJ	1.0 U
Famphur	1.0	1.0 U	1.0 UJ	1.0 UJ	1.0 U

PROJECT: NCBC GULFPORT, MISSISSIPPI — HERBICIDE AQUEOUS ANALYSES (ug/l) — Validation Table

	SAMPLE LOCATION:	BS-01-DI	BS-01-PI	BS-01-RI
	LAB NUMBER:	27176001	27176002	27176003
	DATE SAMPLED:	05/17/94	05/17/94	05/17/94
	DATE ANALYZED:	05/24/94	05/24/94	05/24/94
ANALYTE	PQL			
2,4-D	2.5	2.5 U	2.5 U	2.5 U
2,4,5-T	0.5	0.5 U	0.5 U	0.5 U
2,4,5-TP	0.5	0.5 U	0.5 U	0.5 U
Dinoseb	2.5	0.5 U	0.5 U	0.5 U

PROJECT: NCBC GULFPORT, MISSISSIPPI — DIOXIN/FURANS AQUEOUS ANALYSES (mg/l) — Validation Table

	SAMPLE LOCATION:	BS-01-DI	BS-01-PI	BS-01-RI	BS-01-RIRE
	LAB NUMBER:	9405219-01	9405219-02	9405219-03	9405219-03
	DATE SAMPLED:	05/17/94	05/17/94	05/17/94	05/17/94
	DATE ANALYZED:	05/25/94	05/25/94	05/25/94	06/10/94
ANALYTE					
2,3,7,8-TCDD		1.0 U	1.42 U	0.40 UR	2.02 UR
2,3,7,8-TCDF		0.93 U	0.91 U	0.39 UR	1.94 UR
1,2,3,7,8-PeCDD		0.43 U	0.96 U	14.3 R	2.61 UR
1,2,3,7,8-PeCDF		0.27 U	1.26 U	10.4 R (MPC)	1.55 UR
2,3,4,7,8-PeCDF		0.23 U	0.96 U	6.17 R (MPC)	1.94 UR
1,2,3,4,7,8-HxCDD		0.24 U	0.76 U	21.0 R (MPC)	2.20 UR
1,2,3,6,7,8-HxCDD		0.23 U	0.77 U	15.8 R (MPC)	2.06 UR
1,2,3,7,8,9-HxCDD		0.87 U	0.85 U	15.9 R	2.17 UR
1,2,3,4,7,8-HxCDF		0.26 U	0.56 U	11.1 R	1.69 UR
1,2,3,6,7,8-HxCDF		0.29 U	0.81 U	12.3 R	1.51 UR
2,3,4,6,7,8-HxCDF		0.25 U	0.59 U	10.1 R (MPC)	1.63 UR
1,2,3,7,8,9-HxCDF		0.40 U	2.43 (MPC)	31.3 R (MPC)	1.85 UR
1,2,3,4,6,7,8-HpCDD		1.15 U	1.27 U	34.8 R	2.76 R
1,2,3,4,6,7,8-HpCDF		0.25 U	0.34 U	24.3 R (MPC)	4.65 R (MPC)
1,2,3,4,7,8,9-HpCDF		1.49 U	1.48 U	29.7 R	1.73 UR
OCDD		1.95 U	2.44 U	71.0 R	9.95 R
OCDF		3.32 U	2.05 U	69.3 R	98.2 R

PROJECT: NCBC GULFPORT, MISSISSIPPI — INORGANIC AQUEOUS ANALYSES (ug/l) — Validation Table

ANALYTE	CRQL	BS-01-DI	BS-01-PI	BS-01-RI
SAMPLE LOCATION:		BS-01-DI	BS-01-PI	BS-01-RI
LAB NUMBER:		M2717601	M2717602	M2717603
DATE SAMPLED:		05/17/94	05/17/94	05/17/94
Antimony	60	15.7 U	15.7 U	15.7 U
Arsenic	10	0.60 UJ	0.60 UJ	0.60 UJ
Barium	200	1.3 J	6.4 J	1.2 J
Beryllium	5	0.15 U	0.15 U	0.15 U
Cadmium	5	2.7 U	2.7 U	2.7 U
Chromium	10	2.8 U	2.8 U	2.8 U
Cobalt	50	3.6 U	3.6 U	3.6 U
Copper	25	4.2 U	10.2 U	3.2 U
Lead	3	1.8 R	1.8 R	1.8 R
Mercury	0.2	0.08 U	0.08 U	0.08 U
Nickel	40	9.7 U	9.7 U	9.7 U
Selenium	5	0.79 UJ	0.79 UJ	0.79 UJ
Silver	10	2.7 U	2.7 U	2.7 U
Thallium	10	1.1 UJ	1.1 UJ	1.1 UJ
Vanadium	50	2.1 U	2.1 U	2.1 U
Zinc	20	1.3 U	5.0 J	1.3 U
Tin	200	9.5 U	9.5 U	9.5 U
Cyanide	10	0.81 UJ	0.81 UJ	0.81 UJ
Sulfide	100	0.2	<0.1	<0.1

Chain-of-Custody

QAL QUALITY ANALYTICAL LABORATORIES, INC.

CHAIN OF CUSTODY RECORD AND AGREEMENT TO PERFORM SERVICES

Project #: 8504.50

Purchase Order #:

Project Name: Gulfport HO

Company Name: ABB - ES

Project Manager or Contact & Phone #: P. Baxter / 615-531-1922

Report Copy to: Bob Fisher

Requested Completion Date: 1 Week

Site ID: Site A

Sample Disposal: Dispose ☒ Return ☐

☐ **LGN** One Innovation Drive, Suite C, Alachua, FL 32615-9586, (904) 462-3050 FAX (904) 462-1670

☐ **LRD** 5090 Caterpillar Road, Redding, CA 96003-1412, (916) 244-5227 FAX (916) 244-4109

☒ **LMG** 2567 Fairlane Drive, Montgomery, AL 36116-1622, (205) 271-2440 FAX (205) 271-3428

☐ **LKW** Canviro Analytical Laboratories, Inc., 50 Bathurst, Unit 12, Waterloo, Ontario, Canada N2V 2C5, (519) 747-2575 FAX (519) 747-3806

THIS AREA FOR LAB USE ONLY

Lab #	Page	of
Client Service	Price Source A P Q S	
Acct Code	Test Group	
Project Code	Ack. Gen.	
LIMS Ver	Login	Mult.
COC Review		

Sampling Date	Sampling Time	Type COMP	Type GRAB	Matrix WATER	Matrix SOIL	CLIENT SAMPLE ID (9 CHARACTERS)	QC ID (3 CHAR)	# OF CONTAINERS	Appendix IX VOAs	App. IX SVOA PAH 8310	App IX - Pest/PCB, Herbicide, organics	Dioxin 8290	App IX Sulfide	App IX Metals	App IX Cyanide			SAMPLE REMARKS	LAB 1 ID	LAB 2 ID
5/17/94	0830		X	X		BS-01-DI	FB	11	3	2	2	1	1	1	1			Field Blank		
5/17/94	0900		X	X		BS-01-PI	FB	11	3	2	2	1	1	1	1			Field Blank		
5/17/94	0845		X	X		BS-01-RI	ER	11	3	2	2	1	1	1	1			Equipment Rinse		
5/17/94	—		X	X		BS-01-TB	TB	3	3									Trip Blank		
5/17/94	1100		X	X		GPTHOGW-1		11	3	2	2	1	1	1	1					
5/17/94	1100		X	X		GPTHOGW-1	MSD	11	6	4	4	2	2	2	2			MS/MSD		
5/17/94	1115		X	X		GPTHOGW1D	DUP	11	3	2	2	1	1	1	1			Duplicate		
5/17/94	1330		X	X		GPTHOGW-2		11	3	2	2	1	1	1	1					
5/17/94	1430		X	X		GPTHOGW-3		11	3	2	2	1	1	1	1					
5/17/94	1530		X	X		GPTHOGW-4		11	3	2	2	1	1	1	1					

Sampled By & Title (Please sign and print name): Kate Kelly — Kate Kelly — Date/Time: 5/17/94 1700

Relinquished By (Please sign and print name): Kate Kelly — Kate Kelly — Date/Time: 5/17/94 1730

Received By (Please sign and print name) — Date/Time

Relinquished By (Please sign and print name) — Date/Time

Received By (Please sign and print name) — Date/Time

Relinquished By (Please sign and print name) — Date/Time

Received By (Please sign and print name) — Date/Time

Shipped Via: UPS Fed-Ex Other _____

Shipping #

HAZWRAP/NESSA: Y N

EDATA: Y N

QC LEVEL 1 2 3 OTHER _____

pH | Ice

Custody Seal | Temp

Batch Remarks:

Instructions and Agreement Provisions on Reverse Side

DISTRIBUTION: Original - LAB, Yellow - LAB, Pink - Client

REV 4/94 LAB FORM 340

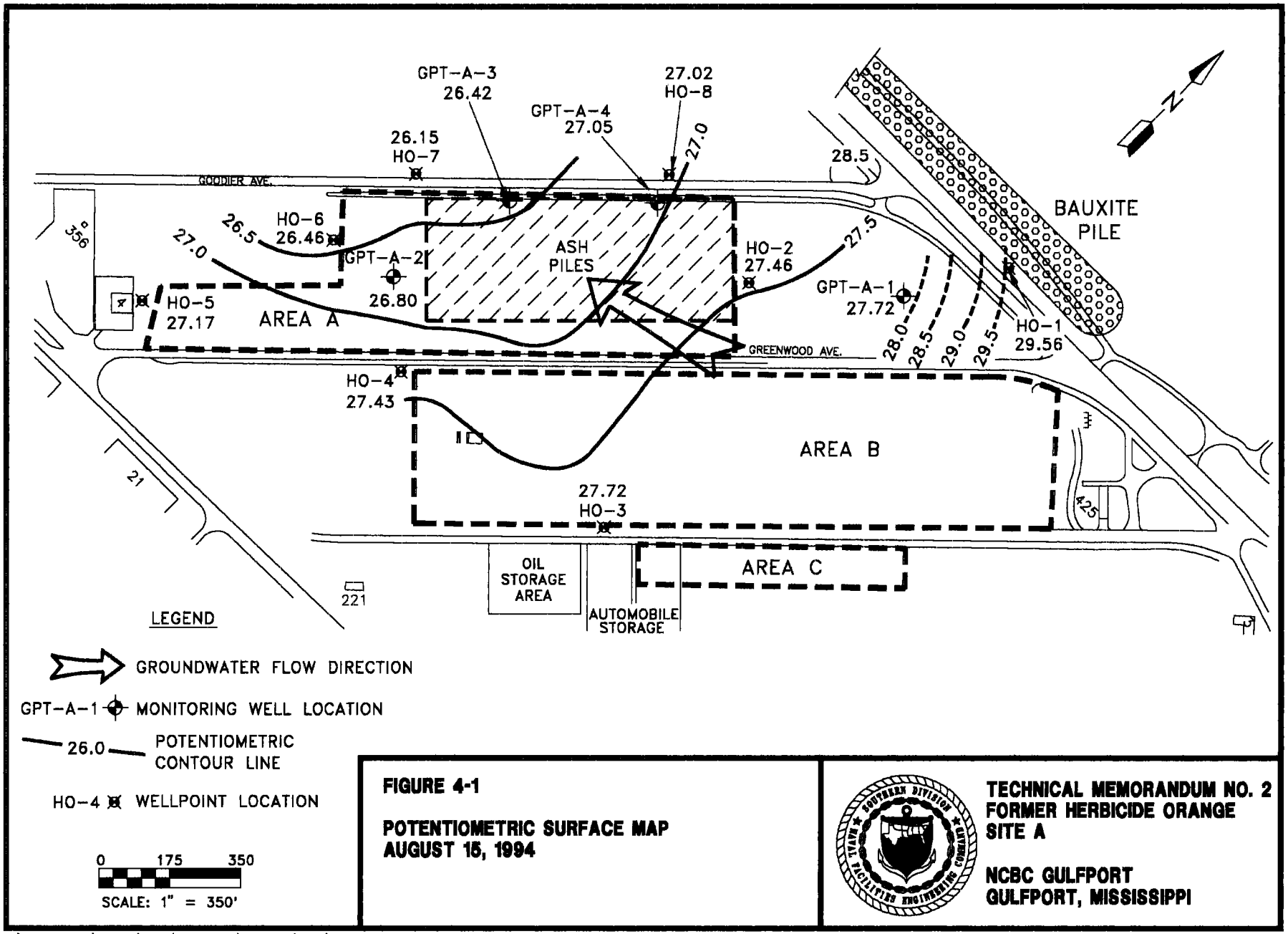

FIGURE 4-1

POTENTIOMETRIC SURFACE MAP
AUGUST 15, 1994

TECHNICAL MEMORANDUM NO. 2
FORMER HERBICIDE ORANGE
SITE A

NCBC GULFPORT
GULFPORT, MISSISSIPPI

C:\GULFPORT\HOTM\TM2\8504.50\FIG4-1\JSL\941206

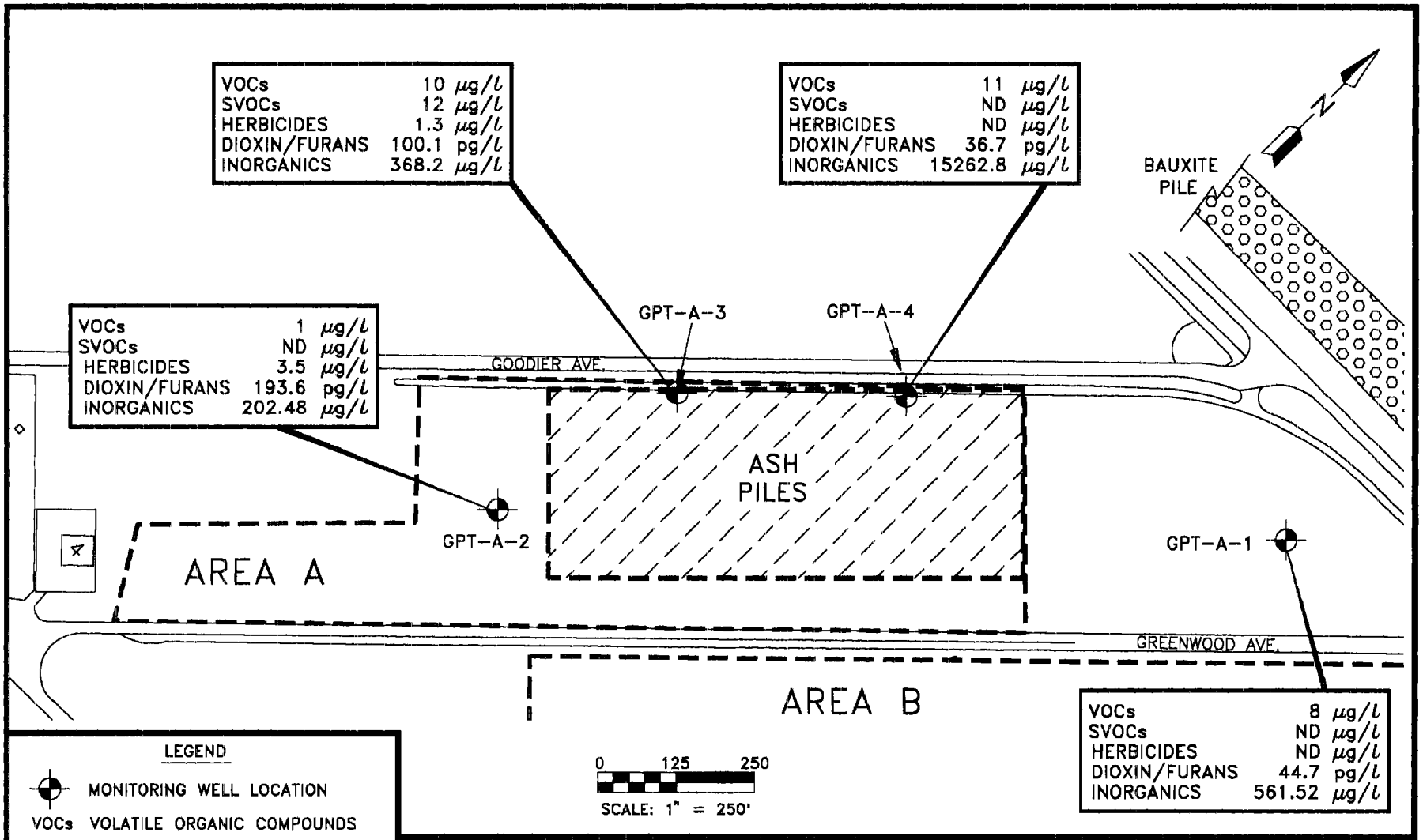

LEGEND

- MONITORING WELL LOCATION
- VOCs VOLATILE ORGANIC COMPOUNDS
- SVOCs SEMIVOLATILE ORGANIC COMPOUNDS
- ND NOT DETECTED
- µg/l MICROGRAMS PER LITER
- pg/l PICOGRAMS PER LITER

FIGURE 4-2

GROUNDWATER QUALITY MAP

TECHNICAL MEMORANDUM NO. 2
FORMER HERBICIDE ORANGE SITE A

NCBC GULFPORT
GULFPORT, MISSISSIPPI

C:\GULFPORT\HOTM\NCBC\8504.50\FIG4-2\JSL\941212

APPENDIX A

ANALYTICAL DATA VALIDATION TABLES

Validation Groundwater Results

PROJECT: NCBC GULFPORT, MISSISSIPPI — VOLATILE AQUEOUS ANALYSES (ug/l) — Validation Table

	SAMPLE NUMBER:	GPTHO2-1	GPTHO2-1D	GPTHO2-2	GPTHO2-3	GPTHO2-4
	LAB NUMBER:	R8548008	R8548004	R8548005	R8548006	R8548007
	DATE SAMPLED:	08/13/94	08/13/94	08/13/94	08/13/94	08/13/94
	DATA ANALYZED:	08/23/94	08/23/94	08/23/94	08/23/94	08/23/94
	DILUTION FACTOR:	1.0	1.0	1.0	1.0	1.0
ANALYTE	CRQL					
Chloromethane	10	10 U	10 U	10 U	10 U	10 U
Bromomethane	10	10 U	10 U	10 U	10 U	10 U
Vinyl Chloride	10	10 U	10 U	10 U	10 U	10 U
Chloroethane	10	10 U	10 U	10 U	10 U	10 U
Methylene Chloride	5	5 U	5 U	5 U	5 U	5 U
Acetone	10	6 J	10 U	10 U	9 J	11
Carbon Disulfide	5	5 U	5 U	5 U	5 U	5 U
Trichlorofluoromethane	5	5 U	2 J	1 J	1 J	5 U
1,1-Dichloroethene	5	5 U	5 U	5 U	5 U	5 U
1,1-Dichloroethane	5	5 U	5 U	5 U	5 U	5 U
1,2-Dichloroethene (total)	5	5 U	5 U	5 U	5 U	5 U
Chloroform	5	5 U	5 U	5 U	5 U	5 U
1,2-Dichloroethane	5	5 U	5 U	5 U	5 U	5 U
Isobutanol	200	200 UR	200 UR	200 UR	200 UR	200 UR
2-Butanone	10	10 U	10 U	10 U	10 U	10 U
1,1,1-Trichloroethane	5	5 U	5 U	5 U	5 U	5 U
Carbon Tetrachloride	5	5 U	5 U	5 U	5 U	5 U
Vinyl acetate	10	10 U	10 U	10 U	10 U	10 U
Bromodichloromethane	5	5 U	5 U	5 U	5 U	5 U
1,2-Dichloropropane	5	5 U	5 U	5 U	5 U	5 U
cis-1,3-Dichloropropene	5	5 U	5 U	5 U	5 U	5 U
Trichloroethene	5	5 U	5 U	5 U	5 U	5 U
Dibromochloromethane	5	5 U	5 U	5 U	5 U	5 U
1,1,2-Trichloroethane	5	5 U	5 U	5 U	5 U	5 U
Benzene	5	5 U	5 U	5 U	5 U	5 U
trans-1,3-Dichloropropene	5	5 U	5 U	5 U	5 U	5 U
2-Chloroethylvinylether	10	10 U	10 U	10 U	10 U	10 U
Bromoform	5	5 U	5 U	5 U	5 U	5 U
2-Hexanone	10	10 U	10 U	10 U	10 U	10 U
4-Methyl-2-Pentanone	10	10 U	10 U	10 U	10 U	10 U
Tetrachloroethene	5	5 U	5 U	5 U	5 U	5 U
1,1,2,2-Tetrachloroethane	5	5 U	5 U	5 U	5 U	5 U
Toluene	5	5 U	5 U	5 U	5 U	5 U
Chlorobenzene	5	5 U	5 U	5 U	5 U	5 U
Ethylbenzene	5	5 U	5 U	5 U	5 U	5 U
Styrene	5	5 U	5 U	5 U	5 U	5 U
Xylene (total)	5	5 U	5 U	5 U	5 U	5 U
1,3-Dichlorobenzene	5	5 U	5 U	5 U	5 U	5 U
1,4-Dichlorobenzene	5	5 U	5 U	5 U	5 U	5 U
1,2-Dichlorobenzene	5	5 U	5 U	5 U	5 U	5 U
Dichlorodifluoromethane	10	10 U	10 U	10 U	10 U	10 U
Acrolein	100	100 U	100 U	100 U	100 U	100 U
Iodomethane	10	10 U	10 U	10 U	10 U	10 U
Acrylonitrile	100	100 U	100 U	100 U	100 U	100 U
Dibromomethane	5	5 U	5 U	5 U	5 U	5 U
Ethyl methacrylate	5	5 U	5 U	5 U	5 U	5 U
1,2,3-Trichloropropene	5	5 U	5 U	5 U	5 U	5 U
trans-1,4-Dichloro-2-butene	5	5 U	5 U	5 U	5 U	5 U

PROJECT: NCBC GULFPORT, MISSISSIPPI — VOLATILE AQUEOUS ANALYSES (ug/l) — Validation Table

SAMPLE NUMBER:		GPTHO2-1	GPTHO2-1D	GPTHO2-2	GPTHO2-3	GPTHO2-4
LAB NUMBER:		R8548008	R8548004	R8548005	R8548006	R8548007
DATE SAMPLED:		08/13/94	08/13/94	08/13/94	08/13/94	08/13/94
DATA ANALYZED:		08/23/94	08/23/94	08/23/94	08/23/94	08/23/94
DILUTION FACTOR:		1.0	1.0	1.0	1.0	1.0
	CRQL					
Acetonitrile	100	100 U	100 U	100 U	100 U	100 U
3-Chloropropene	5	5 U	5 U	5 U	5 U	5 U
Propionitrile	100	100 U	100 U	100 U	100 U	100 U
Methacrylonitrile	5	5 U	5 U	5 U	5 U	5 U
1,4-Dioxane	200	200 UR	200 UR	200 UR	200 UR	200 UR
Methyl methacrylate	10	10 U	10 U	10 U	10 U	10 U
1,2-Dibromoethane	5	5 U	5 U	5 U	5 U	5 U
1,1,1,2-Tetrachloroethane	5	5 U	5 U	5 U	5 U	5 U
1,2-Dibromo-3-chloropropane	10	10 U	10 U	10 U	10 U	10 U
Pentachloroethane	10	10 U	10 U	10 U	10 U	10 U
Chloroprene	200	200 U	200 U	200 U	200 U	200 U

PROJECT: NCBC GULFPORT, MISSISSIPPI

SEMIVOLATILE AQUEOUS ANALYSES (ug/l)

Validation Table

	SAMPLE LOCATION:	GPTHO2-1	GPTHO2-1RE	GPTHO2-1D	GPTHO2-1DRE	GPTHO2-2	GPTHO2-3	GPTHO2-4
	LAB NUMBER:	R8548008	R8548008RE	R8548004	R8548004RE	R8548005	R8548006	R8548007
	DATE SAMPLED:	08/13/94	08/13/94	08/13/94	08/13/94	08/13/94	08/13/94	08/13/94
	DATE ANALYZED:	09/03/94	09/06/94	09/02/94	09/06/94	09/02/94	09/03/94	09/03/94
	DILUTION FACTOR:	1.0	1.0	1.0	1.0	1.0	1.0	1.0
ANALYTE	CRQL							
N-Nitrosodimethylamine	10	10 U	10 UR	10 U	10 UR	10 U	10 U	10 U
Phenol	10	10 U	10 UR	10 U	10 UR	10 U	10 U	10 U
Aniline	10	10 U	10 UR	10 U	10 UR	10 U	10 U	10 U
bis (2-Chloroethyl) Ether	10	10 U	10 UR	10 U	10 UR	10 U	10 U	10 U
2- Chlorophenol	10	10 U	10 UR	10 U	10 UR	10 U	4 J	10 U
1,3- Dichlorobenzene	10	10 U	10 UR	10 U	10 UR	10 U	10 U	10 U
1,4- Dichlorobenzene	10	10 U	10 UR	10 U	10 UR	10 U	10 U	10 U
Benzyl alcohol	10	10 U	10 UR	10 U	10 UR	10 U	10 U	10 U
1,2- Dichlorobenzene	10	10 U	10 UR	10 U	10 UR	10 U	10 U	10 U
2- Methylphenol	10	10 U	10 UR	10 U	10 UR	10 U	10 U	10 U
bis(2-Chloroisopropyl)ether	10	10 U	10 UR	10 U	10 UR	10 U	10 U	10 U
4-Methylphenol	10	10 U	10 UR	10 U	10 UR	10 U	4 J	10 U
N-Nitroso-Di-n-Propylamine	10	10 U	10 UR	10 U	10 UR	10 U	10 U	10 U
Hexachloroethane	10	10 U	10 UR	10 U	10 UR	10 U	10 U	10 U
Nitrobenzene	10	10 U	10 UR	10 U	10 UR	10 U	10 U	10 U
Isophorone	10	10 U	10 UR	10 U	10 UR	10 U	10 U	10 U
2-Nitrophenol	10	10 U	10 UR	10 U	10 UR	10 U	10 U	10 U
2,4-Dimethylphenol	10	10 U	10 UR	10 U	10 UR	10 U	10 U	10 U
Benzoic acid	50	50 U	50 UR	50 U	50 UR	50 U	50 U	50 U
bis (2-Chloroethoxy) Methane	10	10 U	10 UR	10 U	10 UR	10 U	10 U	10 U
2,4-Dichlorophenol	10	10 U	10 UR	10 U	10 UR	10 U	4 J	10 U
1,2,4-Trichlorobenzene	10	10 U	10 UR	10 U	10 UR	10 U	10 U	10 U
Naphthalene	10	10 U	10 UR	10 U	10 UR	10 U	10 U	10 U
4-Chloroaniline	10	10 U	10 UR	10 U	10 UR	10 U	10 U	10 U
Hexachlorobutadiene	10	10 U	10 UR	10 U	10 UR	10 U	10 U	10 U
4-Chloro-3-Methylphenol	10	10 U	10 UR	10 U	10 UR	10 U	10 U	10 U
2-Methylnaphthalene	10	10 U	10 UR	10 U	10 UR	10 U	10 U	10 U
Hexachlorocyclopentadiene	10	10 U	10 UR	10 U	10 UR	10 U	10 U	10 U
2,4,6-Trichlorophenol	10	10 U	10 UR	10 U	10 UR	10 U	10 U	10 U
2,4,5-Trichlorophenol	50	50 U	50 UR	50 U	50 UR	50 U	50 U	50 U
2-Chloronaphthalene	10	10 U	10 UR	10 U	10 UR	10 U	10 U	10 U
2-Nitroaniline	50	50 U	50 UR	50 U	50 UR	50 U	50 U	50 U
Dimethylphthalate	10	10 U	10 UR	10 U	10 UR	10 U	10 U	10 U
Acenaphthylene	10	10 U	10 UR	10 U	10 UR	10 U	10 U	10 U
2,6-Dinitrotoluene	10	10 U	10 UR	10 U	10 UR	10 U	10 U	10 U
3-Nitroaniline	50	50 U	50 UR	50 U	50 UR	50 U	50 U	50 U
Acenaphthene	10	10 U	10 UR	10 U	10 UR	10 U	10 U	10 U
2,4-Dinitrophenol	50	50 U	50 UR	50 U	50 UR	50 U	50 U	50 U
4-Nitrophenol	50	50 U	50 UR	50 U	50 UR	50 U	50 U	50 U
Dibenzofuran	10	10 U	10 UR	10 U	10 UR	10 U	10 U	10 U
2,4-Dinitrotoluene	10	10 U	10 UR	10 U	10 UR	10 U	10 U	10 U
Diethylphthalate	10	10 U	10 UR	10 U	10 UR	10 U	10 U	10 U
4-Chlorophenyl-phenylether	10	10 U	10 UR	10 U	10 UR	10 U	10 U	10 U
Fluorene	10	10 U	10 UR	10 U	10 UR	10 U	10 U	10 U
4-Nitroaniline	50	50 U	50 UR	50 U	50 UR	50 U	50 U	50 U
4,6-Dinitro-2-Methylphenol	50	50 U	50 UR	50 U	50 UR	50 U	50 U	50 U
N-Nitrosodiphenylamine	10	10 U	10 UR	10 U	10 UR	10 U	10 U	10 U

PROJECT: NCBC GULFPORT, MISSISSIPPI		SEMIVOLATILE AQUEOUS ANALYSES (ug/l)					Validation Table	
SAMPLE LOCATION:		GPTHO2-1	GPTHO2-1RE	GPTHO2-1D	GPTHO2-1DRE	GPTHO2-2	GPTHO2-3	GPTHO2-4
LAB NUMBER:		R8548008	R8548008RE	R8548004	R8548004RE	R8548005	R8548006	R8548007
DATE SAMPLED:		08/13/94	08/13/94	08/13/94	08/13/94	08/13/94	08/13/94	08/13/94
DATE ANALYZED:		09/03/94	09/06/94	09/02/94	09/06/94	09/02/94	09/03/94	09/03/94
DILUTION FACTOR:		1.0	1.0	1.0	1.0	1.0	1.0	1.0
ANALYTE	CRQL							
1,2-Diphenylhydrazine	10	10 U	10 UR	10 U	10 UR	10 U	10 U	10 U
4-Bromophenyl-phenylether	10	10 U	10 UR	10 U	10 UR	10 U	10 U	10 U
Hexachlorobenzene	10	10 U	10 UR	10 U	10 UR	10 U	10 U	10 U
Pentachlorophenol	50	50 U	50 UR	50 U	50 UR	50 U	50 U	50 U
Phenanthrene	10	10 U	10 UR	10 U	10 UR	10 U	10 U	10 U
Anthracene	10	10 U	10 UR	10 U	10 UR	10 U	10 U	10 U
Di-n-Butylphthalate	10	10 U	10 UR	10 U	10 UR	10 U	10 U	10 U
Fluoranthene	10	10 U	10 UR	10 U	10 UR	10 U	10 U	10 U
Benzidine	50	50 U	50 UR	50 U	50 UR	50 U	50 R	50 U
Pyrene	10	10 U	10 UR	10 U	10 UR	10 U	10 U	10 U
Butylbenzylphthalate	10	10 U	10 UR	10 U	10 UR	10 U	10 U	10 U
3,3'-Dichlorobenzidine	20	20 U	20 UR	20 U	20 UR	20 U	20 U	20 U
Benzo (a) Anthracene	10	10 U	10 UR	10 U	10 UR	10 U	10 U	10 U
Chrysene	10	10 U	10 UR	10 U	10 UR	10 U	10 U	10 U
bis (2-Ethylhexyl) Phthalate	10	10 U	10 UR	10 U	10 UR	10 U	10 U	10 U
Di-n-Octyl Phthalate	10	10 U	10 UR	10 U	10 UR	10 U	10 U	10 U
Benzo (b) Fluoranthene	10	10 U	10 UR	10 U	10 UR	10 U	10 U	10 U
Benzo (k) Fluoranthene	10	10 U	10 UR	10 U	10 UR	10 U	10 U	10 U
Benzo (a) Pyrene	10	10 U	10 UR	10 U	10 UR	10 U	10 U	10 U
Indeno (1,2,3-cd) Pyrene	10	10 U	10 UR	10 U	10 UR	10 U	10 U	10 U
Dibenz (a,h) Anthracene	10	10 U	10 UR	10 U	10 UR	10 U	10 U	10 U
Benzo (g,h,i) Perylene	10	10 U	10 UR	10 U	10 UR	10 U	10 U	10 U
2-Picoline	50	50 U	50 UR	50 U	50 UR	50 U	50 U	50 U
Methyl methanesulfonate	10	10 U	10 UR	10 U	10 UR	10 U	10 U	10 U
Ethyl Methansulfonate	10	10 U	10 UR	10 U	10 UR	10 U	10 U	10 U
Acetophenone	10	10 U	10 UR	10 U	10 UR	10 U	10 U	10 U
N-Nitrosopiperidine	10	10 U	10 UR	10 U	10 UR	10 U	10 U	10 U
Phenyl-tert-butlamine	50	50 U	50 UR	50 U	50 UR	50 U	50 U	50 U
2,6-Dichlorophenol	10	10 U	10 UR	10 U	10 UR	10 U	10 U	10 U
N-Nitrosoidi-n-butylamine	10	10 U	10 UR	10 U	10 UR	10 U	10 U	10 U
1,2,4,5-Tetrachlorobenzene	50	50 U	50 UR	50 U	50 UR	50 U	50 U	50 U
Pentachlorobenzene	50	50 U	50 UR	50 U	50 UR	50 U	50 U	50 U
1-Naphthylamine	50	50 UR	50 UR	50 UR	50 UR	50 UR	50 UR	50 UR
2-Naphthylamine	50	50 UR	50 UR	50 UR	50 UR	50 UR	50 UR	50 UR
2,3,4,6-Tetrachlorophenol	10	10 U	10 UR	10 U	10 UR	10 U	10 U	10 U
Phenacetin	10	10 U	10 UR	10 U	10 UR	10 U	10 U	10 U
4-Aminobiphenyl	50	50 UR	50 UR	50 UR	50 UR	50 UR	50 UR	50 UR
Pronamide	10	10 U	10 UR	10 U	10 UR	10 U	10 U	10 U
p-(Dimethylamino)azobenzene	10	10 U	10 UR	10 U	10 UR	10 U	10 U	10 U
7,12Dimethylbenz(a)anthracene	10	10 U	10 UR	10 U	10 UR	10 U	10 U	10 U
3-Methylcholanthrene	10	10 U	10 UR	10 U	10 UR	10 U	10 U	10 U
Pyridine	50	50 U	50 UR	50 U	50 UR	50 U	50 U	50 U
N-Nitrosomethylethylamine	10	10 U	10 UR	10 U	10 UR	10 U	10 U	10 U
N-Nitrosodiethylamine	10	10 U	10 UR	10 U	10 UR	10 U	10 U	10 U
N-Nitrosopyrrolidine	10	10 U	10 UR	10 U	10 UR	10 U	10 U	10 U
N-Nitrosomorpholine	10	10 U	10 UR	10 U	10 UR	10 U	10 U	10 U
o-Toluidine	10	10 U	10 UR	10 U	10 UR	10 U	10 U	10 U

PROJECT: NCBC GULFPORT, MISSISSIPPI

SEMIVOLATILE AQUEOUS ANALYSES (ug/l)

Validation Table

	SAMPLE LOCATION:	GPTHO2-1	GPTHO2-1RE	GPTHO2-1D	GPTHO2-1DRE	GPTHO2-2	GPTHO2-3	GPTHO2-4
	LAB NUMBER:	R8548008	R8548008RE	R8548004	R8548004RE	R8548005	R8548006	R8548007
	DATE SAMPLED:	08/13/94	08/13/94	08/13/94	08/13/94	08/13/94	08/13/94	08/13/94
	DATE ANALYZED:	09/03/94	09/06/94	09/02/94	09/06/94	09/02/94	09/03/94	09/03/94
	DILUTION FACTOR:	1.0	1.0	1.0	1.0	1.0	1.0	1.0
ANALYTE	CRQL							
Hexachloropropene	50	50 UR	50 UR	50 UR	50 UR	50 UR	50 UR	50 UR
p-Phenylenediamine	50	500 U	500 UR	500 U	500 UR	500 U	500 U	500 U
Safrole	50	50 U	50 UR	50 U	50 UR	50 U	50 U	50 U
Isosafrole	50	50 U	50 UR	50 U	50 UR	50 U	50 U	50 U
1,4-Napthoquinone	50	1000 U	1000 UR	1000 U	1000 UR	1000 U	1000 U	1000 U
1,3-Dinitrobenzene	10	10 U	10 UR	10 U	10 UR	10 U	10 U	10 U
5-Nirtro-o-toluidine	10	10 U	10 UR	10 U	10 UR	10 U	10 U	10 U
1,3,5-Trinitrobenzene	10	10 U	10 UR	10 U	10 UR	10 U	10 U	10 U
4-Nitroquinoline-1-oxide	10	500 UR	500 UR	500 UR	500 UR	500 UR	500 UR	500 UR
Methapyrilene	50	50 U	50 UR	50 U	50 UR	50 U	50 U	50 U
Aramite	50	50 UJ	50 UR	50 UJ	50 UR	50 UJ	50 UJ	50 UJ
3,3'-Dimethylbenzidine	10	10 UR	10 UR	10 R	10 UR	10 R	10 R	10 R
Hexachlorophene	50	500 UR	500 UR	500 UR	500 UR	500 UR	500 UR	500 UR
2-Acetylaminofluorene	10	10 U	10 UR	10 U	10 UR	10 U	10 U	10 U
Pentachloronitrobenzene	50	50 U	50 UR	50 U	50 UR	50 U	50 U	50 U

PROJECT: NCBC GULFPORT, MISSISSIPPI

POLYNUCLEAR AROMATIC HYDROCARBONS AQUEOUS ANALYSES (ug/l)

Validation Table

SAMPLE LOCATION:	GPTHO2-1	GPTHO2-1RE	GPTHO2-1D	GPTHO2-2	GPTHO2-3	GPTHO2-4
LAB NUMBER:	R8548008	R8548008RE	R8548004	R8548005	R8548006	R8548007
DATE SAMPLED:	08/13/94	08/13/94	08/13/94	08/13/94	08/13/94	08/13/94
DATE ANALYZED:	09/08/94	09/29/94	09/07/94	09/07/94	09/08/94	09/08/94
ANALYTE						
Naphthalene	2.0 U	2.0 UR	2.0 U	2.0 U	2.0 U	2.0 U
Acenaphthylene	2.0 U	2.0 UR	2.0 U	2.0 U	2.0 U	2.0 U
Acenaphthene	2.0 U	2.0 UR	2.0 U	2.0 U	2.0 U	2.0 U
Fluorene	1.0 U	1.0 UR	1.0 U	1.0 U	1.0 U	1.0 U
Phenanthrene	1.0 U	1.0 UR	1.0 U	1.0 U	1.0 U	1.0 U
Anthracene	0.20 U	0.20 UR	0.20 U	0.20 U	0.20 U	0.20 U
Fluoranthene	0.20 U	0.20 UR	0.20 U	0.20 U	0.20 U	0.20 U
Pyrene	2.0 U	2.0 UR	2.0 U	2.0 U	2.0 U	2.0 U
Benzo(a)anthracene	0.20 U	0.20 UR	0.20 U	0.20 U	0.20 U	0.20 U
Chrysene	2.0 U	2.0 UR	2.0 U	2.0 U	2.0 U	2.0 U
Benzo(b)fluoranthene	0.10 U	0.10 UR	0.10 U	0.10 U	0.10 U	0.10 U
Benzo(k)fluoranthene	0.10 UJ	0.10 UR	0.10 U	0.10 U	0.10 U	0.10 U
Benzo(a)pyrene	0.10 UJ	0.10 UR	0.10 U	0.10 U	0.10 U	0.10 U
Dibenzo(a,h)anthracene	0.20 UJ	0.20 UR	0.20 U	0.20 U	0.20 U	0.20 U
Indeno(1,2,3-cd)pyrene	0.20 UJ	0.20 UR	0.20 U	0.20 U	0.20 U	0.20 U
Benzo(g,h,i)perylene	0.20 UJ	0.20 UR	0.20 U	0.20 U	0.20 U	0.20 U

PROJECT: NCBC GULFPORT, MISSISSIPPI — PESTICIDE/PCB AQUEOUS ANALYSES (ug/l) — Validation Table

	SAMPLE LOCATION:	GPTHO2-1	GPTHO2-1D	GPTHO2-2	GPTHO2-3	GPTHO2-4
	LAB NUMBER:	R8548008	R8548004	R8548005	R8548006	R8548007
	DATE SAMPLED:	08/13/94	08/13/94	08/13/94	08/13/94	08/13/94
	DATE ANALYZED:	09/12/94	09/11/94	09/11/94	09/11/94	09/11/94
	DILUTION:	1.0	1.0	1.0	1.0	1.0
ANALYTE	PQL					
alpha-BHC	0.05	0.020 U	0.020 U	0.020 U	0.020 U	0.020 U
beta-BHC	0.05	0.040 U	0.040 U	0.040 U	0.040 U	0.040 U
delta-BHC	0.05	0.020 U	0.020 U	0.020 U	0.020 U	0.020 U
gamma-BHC (Lindane)	0.05	0.020 U	0.020 U	0.020 U	0.020 U	0.020 U
Heptachlor	0.05	0.020 U	0.020 U	0.020 U	0.020 U	0.020 U
Aldrin	0.05	0.020 U	0.020 U	0.020 U	0.020 U	0.020 U
Heptachlor Epoxide	0.05	0.020 U	0.020 U	0.020 U	0.020 U	0.020 U
Endosulfan I	0.10	0.020 U	0.020 U	0.020 U	0.020 U	0.020 U
Dieldrin	0.10	0.020 U	0.020 U	0.020 U	0.020 U	0.020 U
4,4'- DDE	0.10	0.020 U	0.020 U	0.020 U	0.020 U	0.020 U
Endrin	0.10	0.040 U	0.040 U	0.040 U	0.040 U	0.040 U
Endosulfan II	0.10	0.040 U	0.040 U	0.040 U	0.040 U	0.040 U
4,4'- DDD	0.10	0.040 U	0.040 U	0.040 U	0.040 U	0.040 U
Endrin Aldehyde	0.10	0.040 U	0.040 U	0.040 U	0.040 U	0.040 U
Endosulfan Sulfate	0.10	0.040 U	0.040 U	0.040 U	0.040 U	0.040 U
4,4'- DDT	0.10	0.040 U	0.040 U	0.040 U	0.040 U	0.040 U
Methoxychlor	0.50	0.080 U	0.080 U	0.080 U	0.080 U	0.080 U
Endrin Ketone	0.10	0.040 U	0.040 U	0.040 U	0.040 U	0.040 U
Chlordane	0.5	0.20 U	0.20 U	0.20 U	0.20 U	0.20 U
Toxaphene	1.0	1.0 U	1.0 U	1.0 U	1.0 U	1.0 U
Aroclor-1016	0.8	1.0 U	1.0 U	1.0 U	1.0 U	1.0 U
Aroclor-1221	2.0	2.0 U	2.0 U	2.0 U	2.0 U	2.0 U
Aroclor-1232	2.0	2.0 U	2.0 U	2.0 U	2.0 U	2.0 U
Aroclor-1242	0.8	1.0 U	1.0 U	1.0 U	1.0 U	1.0 U
Aroclor-1248	0.5	1.0 U	1.0 U	1.0 U	1.0 U	1.0 U
Aroclor-1254	1.0	0.50 U	0.50 U	0.50 U	0.50 U	0.50 U
Aroclor-1260	1.0	0.50 U	0.50 U	0.50 U	0.50 U	0.50 U
Chlorobenzilate	0.50	0.50 U	0.50 U	0.50 U	0.50 U	0.50 U
Diallate	1.0	1.0 U	1.0 U	1.0 U	1.0 U	1.0 U
Isodrin	0.02	0.020 U	0.020 U	0.020 U	0.020 U	0.020 U
Kepone	1.0	1.0 U	1.0 U	1.0 U	1.0 U	1.0 U

PROJECT: NCBC GULFPORT, MISSISSIPPI — ORGANOPHOSPHORUS PESTICIDE AQUEOUS ANALYSIS (ug/l) — Validation Table

	SAMPLE LOCATION:	GPTHO2-1	GPTHO2-1D	GPTHO2-2	GPTHO2-3	GPTHO2-4
	LAB NUMBER:	M8548008	M8548004	M8548005	M8548006	M8548007
	DATE SAMPLED:	08/13/94	08/13/94	08/13/94	08/13/94	08/13/94
	DATE ANALYZED:	08/29/94	08/29/94	08/29/94	08/29/94	08/29/94
ANALYTE	PQL					
Triethylphosphorothioate	1.0	1.0 U	1.0 U	1.0 U	1.0 U	1.0 U
Thionazin	1.0	1.0 U	1.0 U	1.0 U	1.0 U	1.0 U
Phorate	1.0	1.0 U	1.0 U	1.0 U	1.0 U	1.0 U
Sulfotepp	1.0	1.0 U	1.0 U	1.0 U	1.0 U	1.0 U
Dimethoate	5.0	2.0 U	2.0 U	2.0 U	2.0 U	2.0 U
Disulfoton	1.0	1.0 U	1.0 U	1.0 U	1.0 U	1.0 U
Methyl Parathion	1.0	1.0 U	1.0 U	1.0 U	1.0 U	1.0 U
Ethyl Parathion	1.0	1.0 U	1.0 U	1.0 U	1.0 U	1.0 U
Famphur	1.0	1.0 U	1.0 U	1.0 U	1.0 U	1.0 U

PROJECT: NCBC GULFPORT, MISSISSIPPI — HERBICIDE AQUEOUS ANALYSES (ug/l) — Validation Table

	SAMPLE LOCATION:	GPTHO2-1	GPTHO2-1D	GPTHO2-2	GPTHO2-2DL	GPTHO2-3	GPTHO2-4
	LAB NUMBER:	R8548008	R8548004	R8548005	R8548005DL	R8548006	R8548007
	DATE SAMPLED:	08/13/94	08/13/94	08/13/94	08/13/94	08/13/94	08/13/94
	DATE ANALYZED:	09/07/94	09/07/94	09/07/94	09/09/94	09/07/94	09/07/94
ANALYTE	PQL						
2,4-D	2.5	2.5 U	2.5 U	2.5 U	13 UR	2.5 U	2.5 U
2,4,5-T	0.5	0.5 U	0.5 U	0.5 U	2.5 UR	1.3	0.5 U
2,4,5-TP	0.5	0.5 U	0.5 U	3.2 R	3.5	0.5 U	0.5 U
Dinoseb	2.5	0.5 U	0.5 U	0.5 U	2.5 UR	0.5 U	0.5 U

PROJECT: NCBC GULFPORT, MISSISSIPPI — DIOXIN/FURANS AQUEOUS ANALYSES (pg/l) — Validation Table

	SAMPLE LOCATION:	GPTHO2-1	GPTHO2-1D	GPTHO2-2	GPTHO2-3	GPTHO2-4
	LAB NUMBER:	9408181-08R	9408181-04DR	9408181-05R	9408181-06R	9408181-07R
	DATE SAMPLED:	08/13/94	08/13/94	08/13/94	08/13/94	08/13/94
	DATE ANALYZED:	10/25/94	10/25/94	10/25/94	10/25/94	10/25/94
ANALYTE						
2,3,7,8-TCDD		1.31 UJL	0.73 UJL	1.38 UJL	1.10 UJL	0.17 UJL
2,3,7,8-TCDF		0.96 UJL	0.12 UJL	0.15 UJL	0.12 UJL	0.52 UJL
1,2,3,7,8-PeCDD		1.03 UJL	1.37 UJL	0.99 UJL	1.21 UJL	1.09 UJL
1,2,3,7,8-PeCDF		0.91 UJL	0.34 UJL	0.66 UJL	0.43 UJL	0.65 UJL
2,3,4,7,8-PeCDF		0.83 UJL	0.67 UJL	0.60 UJL	0.79 UJL	0.62 UJL
1,2,3,4,7,8-HxCDD		1.66 UJL	0.19 UJL	0.84 UJL	0.16 UJL	0.15 UJL
1,2,3,6,7,8-HxCDD		1.92 UJL	0.25 UJL	0.96 UJL	0.20 UJL	0.16 UJL
1,2,3,7,8,9-HxCDD		2.33 UJL	0.30 UJL	1.20 UJL	0.24 UJL	0.21 UJL
1,2,3,4,7,8-HxCDF		1.86 UJL	0.66 UJL	0.66 UJL	0.76 UJL	0.08 UJL
1,2,3,6,7,8-HxCDF		1.66 UJL	0.55 UJL	0.53 UJL	0.60 UJL	0.08 UJL
2,3,4,6,7,8-HxCDF		2.13 UJL	0.86 UJL	0.86 UJL	0.84 UJL	0.16 UJL
1,2,3,7,8,9-HxCDF		1.97 UJL	0.89 UJL	0.59 UJL	0.88 UJL	0.19 UJL
1,2,3,4,6,7,8-HpCDD		1.55 UJL	0.25 UJL	11.6 JL	8.1 JL	0.94 UJL
1,2,3,4,6,7,8-HpCDF		1.82 UJL	0.82 UJL	0.69 UJL	0.65 UJL	0.53 UJL
1,2,3,4,7,8,9-HpCDF		1.77 UJL	0.19 UJL	0.66 UJL	0.75 UJL	0.56 UJL
OCDD		44.7 JL	5.1 UJL	182 JL	92 JL	36.7 JL
OCDF		15.9 UJL	1.27 UJL	4.13 UJL	0.91 UJL	4.04 UJL

PROJECT: NCBC GULFPORT, MISSISSIPPI — INORGANIC AQUEOUS ANALYSES (ug/l) — Validation Table

	SAMPLE LOCATION:	GPTHO2-1	GPTHO2-1D	GPTHO2-2	GPTHO2-3	GPTHO2-4
	LAB NUMBER:	R8548008	R8548004	R8548005	R8548006	R8548007
	DATE SAMPLED:	08/13/94	08/13/94	08/13/94	08/13/94	08/13/94
ANALYTE	CRQL					
Antimony	60	10.7 U	10.7 U	10.7 U	10.7 U	15.0 J
Arsenic	10	24.3	23.6	10.7	18.8	28.0 J
Barium	200	218	222	113 J	106 J	473
Beryllium	5	1.7 J	2.1 J	1.3 J	3.1 J	2.8 J
Cadmium	5	1.3 J	1.0 U	1.0 U	1.0 U	3.2 J
Chromium	10	58.0	65.0	7.4 J	45.8	189
Cobalt	50	15.9 J	15.9 J	3.1 U	11.1 J	26.6 J
Copper	25	25.2	23.8 J	4.0 J	22.9 J	59.4
Lead	3	23.2	24.7	5.7	19.7	67.9
Mercury	0.2	0.12 J	0.1. U	0.1 U	0.1 U	0.1 U
Nickel	40	38.7 J	45.6	5.9 U	23.5 J	78.4
Selenium	5	2.4 J	1.8 J	0.68 J	6.0 J	20.8 J
Silver	10	2.1 U	2.1 U	2.1 U	2.1 U	2.1 U
Thallium	10	0.60 U	0.60 U	0.60 U	0.60 U	0.60 U
Vanadium	50	63.7	65.2	37.4 J	88.1	240
Zinc	20	67.7 J	66.2	22.3 J	23.2 J	58.7 J
Tin	200	8.0 U	8.0 U	8.0 U	8.0 U	8.0 U
Cyanide	10	<10	<10	<10	<10	<10
Sulfide (mg/l)	100	<2	<2	<2	<2	14.0

Validated Quality Assurance and Quality Control Results

PROJECT: NCBC GULFPORT, MISSISSIPPI — VOLATILE AQUEOUS ANALYSES (ug/l) — Validation Table

	SAMPLE NUMBER:	BS-01-DI2	BS-01-PI2	BS-01-RI2	BS-01-TB2	BS-02-TB2
	LAB NUMBER:	R8520001	R8520002	R8548002	R8520001	R8548006
	DATE SAMPLED:	08/11/94	08/11/94	08/13/94	08/11/94	08/13/94
	DATA ANALYZED:	08/18/94	08/18/94	08/23/94	08/18/94	08/23/94
	DILUTION FACTOR:	1.0	1.0	1.0	1.0	1.0
ANALYTE	CRQL					
Chloromethane	10	10 U	10 U	10 U	10 U	10 U
Bromomethane	10	10 U	10 U	10 U	10 U	10 U
Vinyl Chloride	10	10 U	10 U	10 U	10 U	10 U
Chloroethane	10	10 U	10 U	10 U	10 U	10 U
Methylene Chloride	5	5 U	5 U	5 U	5 U	5 U
Acetone	10	46 U	10 U	10 U	10 U	10 U
Carbon Disulfide	5	14	5 U	5 U	5 U	5 U
Trichlorofluoromethane	5	5 U	5 U	5 U	5 U	5 U
1,1-Dichloroethene	5	5 U	5 U	5 U	5 U	5 U
1,1-Dichloroethane	5	5 U	5 U	5 U	5 U	5 U
1,2-Dichloroethene (total)	5	5 U	5 U	5 U	5 U	5 U
Chloroform	5	5 U	5 U	5 U	5 U	5 U
1,2-Dichloroethane	5	5 U	5 U	5 U	5 U	5 U
Isobutanol	200	200 UR	200 UR	200 UR	200 UR	200 UR
2-Butanone	10	10 U	10 U	10 U	10 U	10 U
1,1,1-Trichloroethane	5	5 U	5 U	5 U	5 U	5 U
Carbon Tetrachloride	5	5 U	5 U	5 U	5 U	5 U
Vinyl acetate	10	10 U	10 U	10 U	10 U	10 U
Bromodichloromethane	5	5 U	5 U	5 U	5 U	5 U
1,2-Dichloropropane	5	5 U	5 U	5 U	5 U	5 U
cis-1,3-Dichloropropene	5	5 U	5 U	5 U	5 U	5 U
Trichloroethene	5	5 U	5 U	5 U	5 U	5 U
Dibromochloromethane	5	5 U	5 U	5 U	5 U	5 U
1,1,2-Trichloroethane	5	5 U	5 U	5 U	5 U	5 U
Benzene	5	5 U	5 U	5 U	5 U	5 U
trans-1,3-Dichloropropene	5	5 U	5 U	5 U	5 U	5 U
2-Chloroethylvinylether	10	10 U	10 U	10 U	10 U	10 U
Bromoform	5	5 U	5 U	5 U	5 U	5 U
2-Hexanone	10	10 U	10 U	10 U	10 U	10 U
4-Methyl-2-Pentanone	10	10 U	10 U	10 U	10 U	10 U
Tetrachloroethene	5	5 U	5 U	5 U	5 U	5 U
1,1,2,2-Tetrachloroethane	5	5 U	5 U	5 U	5 U	5 U
Toluene	5	5 U	5 U	5 U	5 U	5 U
Chlorobenzene	5	5 U	5 U	5 U	5 U	5 U
Ethylbenzene	5	5 U	5 U	5 U	5 U	5 U
Styrene	5	5 U	5 U	5 U	5 U	5 U
Xylene (total)	5	5 U	5 U	5 U	5 U	5 U
1,3-Dichlorobenzene	5	5 U	5 U	5 U	5 U	5 U
1,4-Dichlorobenzene	5	5 U	5 U	5 U	5 U	5 U
1,2-Dichlorobenzene	5	5 U	5 U	5 U	5 U	5 U
Dichlorodifluoromethane	10	10 U	10 U	10 U	10 U	10 U
Acrolein	100	100 U	100 U	100 U	100 U	100 U
Iodomethane	10	10 U	10 U	10 U	10 U	10 U
Acrylonitrile	100	100 U	100 U	100 U	100 U	100 U
Dibromomethane	5	5 U	5 U	5 U	5 U	5 U
Ethyl methacrylate	5	5 U	5 U	5 U	5 U	5 U
1,2,3-Trichloropropene	5	5 U	5 U	5 U	5 U	5 U
trans-1,4-Dichloro-2-butene	5	5 U	5 U	5 U	5 U	5 U

PROJECT: NCBC GULFPORT, MISSISSIPPI

VOLATILE AQUEOUS ANALYSES (ug/l)

Validation Table

	SAMPLE NUMBER:	BS-01-DI2	BS-01-PI2	BS-01-RI2	BS-01-TB2	BS-02-TB2
	LAB NUMBER:	R8520001	R8520002	R8548002	R8520001	R8548006
	DATE SAMPLED:	08/11/94	08/11/94	08/13/94	08/11/94	08/13/94
	DATA ANALYZED:	08/18/94	08/18/94	08/23/94	08/18/94	08/23/94
	DILUTION FACTOR:	1.0	1.0	1.0	1.0	1.0
	CRQL					
Acetonitrile	100	100 U	100 U	100 U	100 U	100 U
3-Chloropropene	5	5 U	5 U	5 U	5 U	5 U
Propionitrile	100	100 U	100 U	100 U	100 U	100 U
Methacrylonitrile	5	5 U	5 U	5 U	5 U	5 U
1,4-Dioxane	200	200 UR	200 UR	200 UR	200 UR	200 UR
Methyl methacrylate	10	10 U	10 U	10 U	10 U	10 U
1,2-Dibromoethane	5	5 U	5 U	5 U	5 U	5 U
1,1,1,2-Tetrachloroethane	5	5 U	5 U	5 U	5 U	5 U
1,2-Dibromo-3-chloropropane	10	10 U	10 U	10 U	10 U	10 U
Pentachloroethane	10	10 U	10 U	10 U	10 U	10 U
Chloroprene	200	200 UR	200 UR	200 UR	200 UR	200 U

PROJECT: NCBC GULFPORT, MISSISSIPPI — SEMIVOLATILE AQUEOUS ANALYSES (ug/l) — Validation Table

ANALYTE	CRQL	BS-01-DI2	BS-01-PI2	BS-01-PI2RE	BS-01-RI2
SAMPLE LOCATION:		BS-01-DI2	BS-01-PI2	BS-01-PI2RE	BS-01-RI2
LAB NUMBER:		R8520001	R8520002	R8520002	R8548002
DATE SAMPLED:		08/11/94	08/11/94	08/11/94	08/13/94
DATE ANALYZED:		08/26/94	08/26/94	09/14/94	09/02/94
DILUTION FACTOR:		1.0	1.0	1.0	1.0
N-Nitrosodimethylamine	10	10 U	10 U	10 UR	10 U
Phenol	10	10 U	10 UR	10 UR	10 U
Aniline	10	10 U	10 U	10 UR	10 U
bis (2-Chloroethyl) Ether	10	10 U	10 U	10 UR	10 U
2- Chlorophenol	10	10 U	10 UR	10 UR	10 U
1,3- Dichlorobenzene	10	10 U	10 U	10 UR	10 U
1,4- Dichlorobenzene	10	10 U	10 U	10 UR	10 U
Benzyl alcohol	10	10 U	10 UR	10 UR	10 U
1,2- Dichlorobenzene	10	10 U	10 U	10 UR	10 U
2- Methylphenol	10	10 U	10 UR	10 UR	10 U
bis(2-Chloroisopropyl)ether	10	10 U	10 U	10 UR	10 U
4-Methylphenol	10	10 U	10 UR	10 UR	10 U
N-Nitroso-Di-n-Propylamine	10	10 U	10 UR	10 UR	10 U
Hexachloroethane	10	10 U	10 U	10 UR	10 U
Nitrobenzene	10	10 U	10 U	10 UR	10 U
Isophorone	10	10 U	10 U	10 UR	10 U
2-Nitrophenol	10	10 U	10 UR	10 UR	10 U
2,4-Dimethylphenol	10	10 U	10 UR	10 UR	10 U
Benzoic acid	50	50 U	50 UR	50 UR	50 U
bis (2-Chloroethoxy) Methane	10	10 U	10 U	10 UR	10 U
2,4-Dichlorophenol	10	10 U	10 UR	10 UR	10 U
1,2,4-Trichlorobenzene	10	10 U	10 U	10 UR	10 U
Naphthalene	10	10 U	10 U	10 UR	10 U
4-Chloroaniline	10	10 U	10 U	10 UR	10 U
Hexachlorobutadiene	10	10 U	10 U	10 UR	10 U
4-Chloro-3-Methylphenol	10	10 U	10 UR	10 UR	10 U
2-Methylnaphthalene	10	10 U	10 U	10 UR	10 U
Hexachlorocyclopentadiene	10	10 U	10 U	10 UR	10 U
2,4,6-Trichlorophenol	10	10 U	10 UR	10 UR	10 U
2,4,5-Trichlorophenol	50	50 U	50 UR	50 UR	50 U
2-Chloronaphthalene	10	10 U	10 U	10 UR	10 U
2-Nitroaniline	50	50 U	50 U	50 UR	50 U
Dimethylphthalate	10	10 U	10 U	10 UR	10 U
Acenaphthylene	10	10 U	10 U	10 UR	10 U
2,6-Dinitrotoluene	10	10 U	10 U	10 UR	10 U
3-Nitroaniline	50	50 UJ	50 UJ	50 UR	50 U
Acenaphthene	10	10 U	10 U	10 UR	10 U
2,4-Dinitrophenol	50	50 U	50 UR	50 UR	50 U
4-Nitrophenol	50	50 U	50 UR	50 UR	50 U
Dibenzofuran	10	10 U	10 U	10 UR	10 U
2,4-Dinitrotoluene	10	10 U	10 U	10 UR	10 U
Diethylphthalate	10	10 U	10 U	10 UR	10 U
4-Chlorophenyl-phenylether	10	10 U	10 U	10 UR	10 U
Fluorene	10	10 U	10 U	10 UR	10 U
4-Nitroaniline	50	50 U	50 U	50 UR	50 U
4,6-Dinitro-2-Methylphenol	50	50 U	50 UR	50 UR	50 U
N-Nitrosodiphenylamine	10	10 U	10 UR	10 UR	10 U

PROJECT: NCBC GULFPORT, MISSISSIPPI

SEMIVOLATILE AQUEOUS ANALYSES (ug/l)

Validation Table

	SAMPLE LOCATION:	BS-01-DI2	BS-01-PI2	BS-01-PI2RE	BS-01-RI2
	LAB NUMBER:	R8520001	R8520002	R8520002	R8548002
	DATE SAMPLED:	08/11/94	08/11/94	08/11/94	08/13/94
	DATE ANALYZED:	08/26/94	08/26/94	09/14/94	09/02/94
	DILUTION FACTOR:	1.0	1.0	1.0	1.0
ANALYTE	CRQL				
1,2-Diphenylhydrazine	10	10 U	10 U	10 UR	10 U
4-Bromophenyl-phenylether	10	10 U	10 U	10 UR	10 U
Hexachlorobenzene	10	10 U	10 U	10 UR	10 U
Pentachlorophenol	50	50 U	50 UR	50 UR	50 U
Phenanthrene	10	10 U	10 U	10 UR	10 U
Anthracene	10	10 U	10 U	10 UR	10 U
Di-n-Butylphthalate	10	10 U	10 U	10 UR	10 U
Fluoranthene	10	10 U	10 U	10 UR	10 U
Benzidine	50	50 UR	50 UR	50 UR	50 U
Pyrene	10	10 U	10 U	10 UR	10 U
Butylbenzylphthalate	10	10 U	10 U	10 UR	10 U
3,3'-Dichlorobenzidine	20	20 U	20 U	20 UR	20 U
Benzo (a) Anthracene	10	10 U	10 U	10 UR	10 U
Chrysene	10	10 U	10 U	10 UR	10 U
bis (2-Ethylhexyl) Phthalate	10	10 U	10 U	10 UR	10 U
Di-n-Octyl Phthalate	10	10 U	10 U	10 UR	10 U
Benzo (b) Fluoranthene	10	10 U	10 U	10 UR	10 U
Benzo (k) Fluoranthene	10	10 U	10 U	10 UR	10 U
Benzo (a) Pyrene	10	10 U	10 U	10 UR	10 U
Indeno (1,2,3-cd) Pyrene	10	10 U	10 U	10 UR	10 U
Dibenz (a,h) Anthracene	10	10 U	10 U	10 UR	10 U
Benzo (g,h,i) Perylene	10	10 U	10 U	10 UR	10 U
2-Picoline	50	50 U	50 U	50 UR	50 U
Methyl methanesulfonate	10	10 U	10 U	10 UR	10 U
Ethyl Methansulfonate	10	10 U	10 U	10 UR	10 U
Acetophenone	10	10 U	10 U	10 UR	10 U
N-Nitrosopiperidine	10	10 U	10 U	10 UR	10 U
Phenyl-tert-butlamine	50	50 U	50 UR	50 UR	50 U
2,6-Dichlorophenol	10	10 U	10 U	10 UR	10 U
N-Nitrosoidi-n-butylamine	10	10 U	10 UR	10 UR	10 U
1,2,4,5-Tetrachlorobenzene	50	50 U	50 U	50 UR	50 U
Pentachlorobenzene	50	50 U	50 U	50 UR	50 U
1-Naphthylamine	50	50 U	50 U	50 UR	50 UR
2-Naphthylamine	50	50 U	50 U	50 UR	50 UR
2,3,4,6-Tetrachlorophenol	10	10 U	10 UR	10 UR	10 U
Phenacetin	10	10 U	10 U	10 UR	10 U
4-Aminobiphenyl	50	50 UJ	50 UJ	50 UR	50 UR
Pronamide	10	10 U	10 U	10 UR	10 U
p-(Dimethylamino)azobenzene	10	10 U	10 U	10 UR	10 U
7,12Dimethylbenz(a)anthracene	10	10 U	10 U	10 UR	10 U
3-Methylcholanthrene	10	10 U	10 U	10 UR	10 U
Pyridine	50	50 U	50 UR	50 UR	50 U
N-Nitrosomethylethylamine	10	10 U	10 UR	10 UR	10 U
N-Nitrosodiethylamine	10	10 U	10 UR	10 UR	10 U
N-Nitrosopyrrolidine	10	10 U	10 U	10 UR	10 U
N-Nitrosomorpholine	10	10 U	10 U	10 UR	10 U
o-Toluidine	10	10 U	10 U	10 UR	10 U

PROJECT: NCBC GULFPORT, MISSISSIPPI

SEMIVOLATILE AQUEOUS ANALYSES (ug/l)

Validation Table

	SAMPLE LOCATION:	BS-01-DI2	BS-01-PI2	BS-01-PI2RE	BS-01-RI2
	LAB NUMBER:	R8520001	R8520002	R8520002	R8548002
	DATE SAMPLED:	08/11/94	08/11/94	08/11/94	08/13/94
	DATE ANALYZED:	08/26/94	08/26/94	09/14/94	09/02/94
	DILUTION FACTOR:	1.0	1.0	1.0	1.0
ANALYTE	CRQL				
Hexachloropropene	50	50 U	50 U	50 UR	50 UR
p-Phenylenediamine	50	500 UJ	500 UR	500 UR	500 U
Safrole	50	50 U	50 U	50 UR	50 U
Isosafrole	50	50 U	50 U	50 UR	50 U
1,4-Napthoquinone	50	1000 U	1000 U	1000 UR	1000 U
1,3-Dinitrobenzene	10	10 U	10 U	10 UR	10 U
5-Nirtro-o-toluidine	10	10 U	10 U	10 UR	10 U
1,3,5-Trinitrobenzene	10	10 U	10 U	10 UR	10 U
4-Nitroquinoline-1-oxide	10	500 UR	500 UR	500 UR	500 UR
Methapyrilene	50	50 U	50 U	50 UR	50 U
Aramite	50	50 U	50 U	50 UR	50 UJ
3,3'-Dimethylbenzidine	10	10 UJ	10 UJ	10 UR	10 R
Hexachlorophene	50	500 UR	500 UR	500 UR	500 UR
2-Acetylaminofluorene	10	10 U	10 U	10 UR	10 U
Pentachloronitrobenzene	50	50 U	50 U	50 UR	50 U

PROJECT: NCBC GULFPORT, MISSISSIPPI

POLYNUCLEAR AROMATIC HYDROCARBONS AQUEOUS ANALYSES (ug/l)

Validation Table

SAMPLE LOCATION:	BS-01-DI2	BS-01-DI2RE	BS-01-PI2	BS-01-PI2RE	BS-01-RI2	BS-01-RI2RE
LAB NUMBER:	R8520001	R8520001RE	R8520002	R8520002RE	R8548002	R8548002RE
DATE SAMPLED:	08/10/94	08/10/94	08/10/94	08/10/94	08/13/94	08/10/94
DATE ANALYZED:	09/06/94	09/06/94	09/06/94	09/06/94	09/07/94	09/06/94
ANALYTE						
Naphthalene	2.0 U	2.0 UR	2.0 U	2.0 UR	2.0 UJ	2.0 UR
Acenaphthylene	2.0 U	2.0 UR	2.0 U	2.0 UR	2.0 UJ	2.0 UR
Acenaphthene	2.0 U	2.0 UR	2.0 U	2.0 UR	2.0 UJ	2.0 UR
Fluorene	1.0 U	1.0 UR	1.0 U	1.0 UR	1.0 UJ	1.0 UR
Phenanthrene	1.0 U	1.0 UR	1.0 U	1.0 UR	1.0 UJ	1.0 UR
Anthracene	0.25 U	0.20 UR	0.25 U	0.20 UR	0.20 UJ	0.20 UR
Fluoranthene	0.20 U	0.20 UR	0.20 U	0.20 UR	0.20 UJ	0.20 UR
Pyrene	2.0 U	2.0 UR	2.0 U	2.0 UR	2.0 UJ	2.0 UR
Benzo(a)anthracene	0.20 U	0.20 UR	0.20 U	0.20 UR	0.20 UJ	0.20 UR
Chrysene	2.0 U	2.0 UR	2.0 U	2.0 UR	2.0 UJ	2.0 UR
Benzo(b)fluoranthene	0.10 U	0.10 UR	0.10 U	0.10 UR	0.10 UJ	0.10 UR
Benzo(k)fluoranthene	0.10 U	0.10 UR	0.10 U	0.10 UR	0.10 UJ	0.10 UR
Benzo(a)pyrene	0.10 U	0.10 UR	0.10 U	0.10 UR	0.10 UJ	0.10 UR
Dibenzo(a,h)anthracene	0.20 U	0.20 UR	0.20 U	0.20 UR	0.20 UJ	0.20 UR
Indeno(1,2,3-cd)pyrene	0.20 U	0.20 UR	0.20 U	0.20 UR	0.20 UJ	0.20 UR
Benzo(g,h,i)perylene	0.20 U	0.20 UR	0.20 U	0.20 UR	0.20 UJ	0.20 UR

PROJECT: NCBC GULFPORT, MISSISSIPPI — PESTICIDE/PCB AQUEOUS ANALYSES (ug/l) — Validation Table

	SAMPLE LOCATION:	BS-01-DI2	BS-01-PI2	BS-01-RI2
	LAB NUMBER:	R8520001	R8520002	R8548002
	DATE SAMPLED:	08/11/94	08/11/94	08/13/94
	DATE ANALYZED:	09/01/94	09/01/94	09/11/94
	DILUTION:	1.0	1.0	1.0
ANALYTE	PQL			
alpha-BHC	0.05	0.020 U	0.020 U	0.020 U
beta-BHC	0.05	0.040 U	0.040 U	0.040 U
delta-BHC	0.05	0.020 U	0.020 U	0.020 U
gamma-BHC (Lindane)	0.05	0.020 U	0.020 U	0.020 U
Heptachlor	0.05	0.020 U	0.020 U	0.020 U
Aldrin	0.05	0.020 U	0.020 U	0.020 U
Heptachlor Epoxide	0.05	0.020 U	0.020 U	0.020 U
Endosulfan I	0.10	0.020 U	0.020 U	0.020 U
Dieldrin	0.10	0.020 U	0.020 U	0.020 U
4,4'- DDE	0.10	0.020 U	0.020 U	0.020 U
Endrin	0.10	0.040 U	0.040 U	0.040 U
Endosulfan II	0.10	0.040 U	0.040 U	0.040 U
4,4'- DDD	0.10	0.040 U	0.040 U	0.040 U
Endrin Aldehyde	0.10	0.040 U	0.040 U	0.040 U
Endosulfan Sulfate	0.10	0.040 U	0.040 U	0.040 U
4,4'- DDT	0.10	0.040 U	0.040 U	0.040 U
Methoxychlor	0.50	0.080 U	0.080 U	0.080 U
Endrin Ketone	0.10	0.040 U	0.040 U	0.040 U
Chlordane	0.5	0.20 U	0.20 U	0.20 U
Toxaphene	1.0	1.0 U	1.0 U	1.0 U
Aroclor-1016	0.8	1.0 U	1.0 U	1.0 U
Aroclor-1221	2.0	2.0 U	2.0 U	2.0 U
Aroclor-1232	2.0	2.0 U	2.0 U	2.0 U
Aroclor-1242	0.8	1.0 U	1.0 U	1.0 U
Aroclor-1248	0.5	1.0 U	1.0 U	1.0 U
Aroclor-1254	1.0	0.50 U	0.50 U	0.50 U
Aroclor-1260	1.0	0.50 U	0.50 U	0.50 U
Chlorobenzilate	0.50	0.50 U	0.50 U	0.50 U
Diallate	1.0	1.0 U	1.0 U	1.0 U
Isodrin	0.02	0.020 U	0.020 U	0.020 U
Kepone	1.0	1.0 U	1.0 U	1.0 U

PROJECT: NCBC GULFPORT, MISSISSIPPI — ORGANOPHOSPHORUS PESTICIDE AQUEOUS ANALYSIS (ug/l) — Validation Table

	SAMPLE LOCATION:	BS-01-DI2	BS-01-PI2	BS-01-PI2RE	BS-01-RI2
	LAB NUMBER:	R8520001	R8520002	R8520002RE	R8548005DL
	DATE SAMPLED:	08/10/94	08/10/94	08/10/94	08/13/94
	DATE ANALYZED:	08/29/94	08/29/94	08/29/94	08/29/94
ANALYTE	PQL				
Triethylphosphorothioate	1.0	1.0 U	1.0 UJ	1.0 UR	1.0 U
Thionazin	1.0	1.0 U	1.0 UJ	1.0 UR	1.0 U
Phorate	1.0	1.0 U	1.0 UJ	1.0 UR	1.0 U
Sulfotepp	1.0	1.0 U	1.0 UJ	1.0 UR	1.0 U
Dimethoate	5.0	2.0 U	2.0 UJ	2.0 UR	2.0 U
Disulfoton	1.0	1.0 U	1.0 UJ	1.0 UR	1.0 U
Methyl Parathion	1.0	1.0 U	1.0 UJ	1.0 UR	1.0 U
Ethyl Parathion	1.0	1.0 U	1.0 UJ	1.0 UR	1.0 U
Famphur	1.0	1.0 U	1.0 UJ	1.0 UR	1.0 U

PROJECT: NCBC GULFPORT, MISSISSIPPI — HERBICIDE AQUEOUS ANALYSES (ug/l) — Validation Table

	SAMPLE LOCATION:	BS-01-DI2	BS-01-PI2	BS-01-RI2
	LAB NUMBER:	R8520001	R8520002	R8548005DL
	DATE SAMPLED:	08/10/94	08/10/94	08/13/94
	DATE ANALYZED:	09/05/94	09/05/94	09/07/94
ANALYTE	PQL			
2,4-D	2.5	2.5 U	2.5 U	2.5 U
2,4,5-T	0.5	0.5 U	0.5 U	0.5 U
2,4,5-TP	0.5	0.5 U	0.5 U	0.5 U
Dinoseb	2.5	0.5 U	0.5 U	0.5 U

PROJECT: NCBC GULFPORT, MISSISSIPPI — DIOXIN/FURANS AQUEOUS ANALYSES (pg/l) — Validation Table

	SAMPLE LOCATION:	BS-01-RI2
	LAB NUMBER:	9409191-02R
	DATE SAMPLED:	08/13/94
	DATE ANALYZED:	10/25/94
ANALYTE		
2,3,7,8-TCDD		3.38 UJL
2,3,7,8-TCDF		1.87 UJL
1,2,3,7,8-PeCDD		1.95 UJL
1,2,3,7,8-PeCDF		1.18 UJL
2,3,4,7,8-PeCDF		1.12 UJL
1,2,3,4,7,8-HxCDD		2.41 UJL
1,2,3,6,7,8-HxCDD		2.67 UJL
1,2,3,7,8,9-HxCDD		3.22 UJL
1,2,3,4,7,8-HxCDF		1.88 UJL
1,2,3,6,7,8-HxCDF		1.55 UJL
2,3,4,6,7,8-HxCDF		2.51 UJL
1,2,3,7,8,9-HxCDF		2.63 UJL
1,2,3,4,6,7,8-HpCDD		1.96 UJL
1,2,3,4,6,7,8-HpCDF		1.84 UJL
1,2,3,4,7,8,9-HpCDF		1.92 UJL
OCDD		9.15 UJL
OCDF		9.45 UJL

PROJECT: NCBC GULFPORT, MISSISSIPPI — INORGANIC AQUEOUS ANALYSES (ug/l) — Validation Table

	SAMPLE LOCATION:	BS-01-DI2	BS-01-PI2	BS-01-RI2
	LAB NUMBER:	R8520001	R8520002	R8548002
	DATE SAMPLED:	08/10/94	08/10/94	08/13/94
ANALYTE	CRQL			
Antimony	60	10.7 U	10.7 U	10.7 U
Arsenic	10	0.60 U	0.60 U	0.60 U
Barium	200	1.5 U	9.1 U	3.1 U
Beryllium	5	0.30 U	0.30 U	0.30 U
Cadmium	5	1.0 U	1.0 U	1.0 U
Calcium		50.9 J	2040 J	---
Chromium	10	2.6 U	2.6 U	2.6 U
Cobalt	50	3.1 U	3.1 U	3.1 U
Copper	25	0.90 U	2.2 J	1.5 J
Iron		19.3 J	75.7 J	---
Lead	3	0.60 U	0.60 U	0.60 U
Magnesium		31.4 U	106 J	---
Manganese		10.1 J	37.5	---
Mercury	0.2	0.10 U	0.10 U	0.10 U
Nickel	40	5.9 U	5.9 U	5.9 U
Selenium	5	0.60 UJ	0.60 UJ	0.60 U
Silver	10	2.1 U	2.1 U	2.1 U
Sodium		15.6 J	53600	---
Thallium	10	0.60 U	0.60 U	0.60 U
Vanadium	50	1.5 U	1.5 U	1.5 U
Zinc	20	1.7 U	3.6 U	2.2 U
Tin	200	8.0 U	8.0 U	8.0 U
Cyanide	10	<10	<10	<10
Sulfide (mg/l)	100	<2	<2	<2

Chain-of-Custody

QAL QUALITY ANALYTICAL LABORATORIES, INC.

CHAIN OF CUSTODY RECORD AND AGREEMENT TO PERFORM SERVICES

Project #: 8504.50

Purchase Order #:

Project Name: Gulfport HO

Company Name: ABB Environmental Services

Project Manager & Phone #: Mr. [ ] Ms. [X] Dr. [ ] P. Baxter 615-531-1922

Report Copy to: Bob Fisher

Requested Completion Date: Standard

Sampling Requirements: SDWA [ ] NPDES [ ] RCRA [ ] OTHER ____

Sample Disposal: Dispose [X] Return [ ]

LAB TEST CODES

SHADED AREA-- FOR LAB USE ONLY: Lab 1 # R8520; Lab 2 #; Quote #; Kit Request #; Project #; No. of Samples; Page; of; COC Rev; Login; LIMS Ver; Ack Gen

ANALYSES REQUESTED

Sampling Date	Sampling Time	Type COMP	Type GARB	Matrix WATER	Matrix SOIL	CLIENT SAMPLE ID (9 CHARACTERS)	# OF CONTAINERS	App. IX VOAs	App IX SVOA, Pest/PCB 8270, 8080	App IX Herbicides 8150	App IX Metals	Sulfide - App IX	Cyanide - App IX	Dioxin Method 8290 Strict	PAH 8310	App IX O-P Pesticides	REMARKS	LAB 1 ID	LAB 2 ID
8/10/94	0900		X	X		BS-01-DI2	11	3	1	1	1	1	1	1	1	1	D.I. Blank	1	
8/10/94	0900		X	X		BS-01-PI2	11	3	1	1	1	1	1	1	1	1	Potable Blank	2	
8/10/94	—		X	X		BS-01-TB2	3	3									Trip Blank	3 TB	

Sampled By & Title (Please sign and print name): K. Kelly Kate Kelly — Date/Time: 8/10/94 10:00

Relinquished By (Please sign and print name): Kate Kelly Kate Kelly — Date/Time: 8/10/94 10:00

Received By (Please sign and print name): — Date/Time:

Relinquished By (Please sign and print name): — Date/Time:

Received By (Please sign and print name): — Date/Time:

Relinquished By (Please sign and print name): — Date/Time:

Received By (Please sign and print name): Bob Kelly — Date/Time:

Shipped Via: UPS BUS Fed-Ex Hand Other ____ — Shipping #:

Work Authorized By (Please sign and print name):

Remarks: Dioxin 8290 needs to follow SW8 exactly!

HAZWRAP/NESSA: Y N

QC Level: 1 2 3 Other: ____

COC Rec Y; ICE Y; Ana Req Y; TEMP 30C; Cust Seal Y; Ph

Instructions and Agreement Provisions on Reverse Side

DISTRIBUTION: Original - LAB, Yellow - LAB, Pink - Client

LAB FORM 340

QAL QUALITY ANALYTICAL LABORATORIES, INC.

CHAIN OF CUSTODY RECORD AND AGREEMENT TO PERFORM SERVICES

Project #: 8504.50

Purchase Order #:

Project Name: Gulfport HO

Company Name: ABB - Environmental Services

Project Manager & Phone #: Mr. [ ] Ms. [X] Dr. [ ] P. Baxter 615-531-1922

Report Copy to: Bob Fisher

Requested Completion Date: Standard

Sampling Requirements: SDWA [ ] NPDES [ ] RCRA [ ] OTHER ____

Sample Disposal: Dispose [X] Return [ ]

LAB TEST CODES

ANALYSES REQUESTED

SHADED AREA-- FOR LAB USE ONLY

Lab 1 #: R8548

Lab 2 #:

Quote #:

Kit Request #:

Project #:

No. of Samples: Page: of

COC Rev: Login: LIMS Ver: Ack Gen:

Sampling Date	Sampling Time	Type COMP	Type GRB	Matrix WATER	Matrix SOIL	CLIENT SAMPLE ID (9 CHARACTERS)	# OF CONTAINERS	Dioxin Method 8290	App. IX VOA	App. IX SVOA 8270 Pest/PCB 8080	App IX Herbicides 8150	PNA 8310	O-P, Pest App IX	App IX Metals	App IX Sulfide	App IX Cyanide	REMARKS	LAB 1 ID	LAB 2 ID
8/12/94	—		X	X		BS-02-TB2	3		3									1	
8/12/94	2000		X	X		BS-01-RI2	11	1	3	1	1	1	1	1	1	1		2	
8/12/94	2000		X	X		BS-01-DI2	1	1									Broken Bottle - Resample	3	
~~8/13/94~~	~~0700~~		~~X~~	~~X~~		~~GPTHO2-1~~	~~11~~	~~1~~	~~3~~	~~1~~	~~1~~	~~1~~	~~1~~	~~1~~	~~1~~	~~1~~	~~Matrix Spike/Dup~~	~~AKK 8/13/94~~	
8/13/94	0700		X	X		GPTHO2-1D	11	1	3	1	1	1	1	1	1	1		4	
8/13/94	0800		X	X		GPTHO2-2	11	1	3	1	1	1	1	1	1	1		5	
			X	X		~~GPTHO3~~												AKK 8/13/94	
8/13/94	0900		X	X		GPTHO2-3	11	1	3	1	1	1	1	1	1	1		6	
8/13/94	1000		X	X		GPTHO2-4	11	1	3	1	1	1	1	1	1	1		7	
8/13/94	0700		X	X		GPTHD2-1	33	3	9	3	3	3	3	3	3	3	Matrix Spike/Dup	8	

Sampled By & Title (Please sign and print name): Kate Kelly Kate Kelly	Date/Time: 8/13/94 1200	Relinquished By (Please sign and print name): Kate Kelly Kate Kelly	Date/Time: 8/13/94 1230
Received By (Please sign and print name):	Date/Time:	Relinquished By (Please sign and print name):	Date/Time:
Received By (Please sign and print name):	Date/Time:	Relinquished By (Please sign and print name):	Date/Time:
Received By (Please sign and print name): Nicole Rolivera	Date/Time: 8/15/94 0945	Shipped Via: UPS BUS (Fed-Ex) Hand Other ____	Shipping #:
Work Authorized By (Please sign and print name):	Remarks:		

HAZWRAP/NESSA: Y N (3N)

QC Level: 1 2 (3) Other: ____

COC Rec X ICE X

Ana Req X TEMP

Cust Seal X Ph ____

Instructions and Agreement Provisions on Reverse Side

DISTRIBUTION: Original - LAB Yellow - LAB Pink - Client

APPENDIX B

PRECISION, ACCURACY, REPRESENTATIVENESS, COMPARABILITY AND COMPLETENESS REPORT

PRECISION, ACCURACY, REPRESENTATIVENESS, COMPARABILITY, AND COMPLETENESS FOR NCBC GULFPORT HERBICIDE ORANGE STORAGE FACILITY

NAVAL CONSTRUCTION BATTALION CENTER GULFPORT, MISSISSIPPI

Prepared by:
Heartland Environmental Services, Inc.
P.O. Box 163
St. Peters, Missouri 63376

Prepared for:

ABB Environmental Services, Inc.
1400 Centerpoint Blvd., Suite 158
Knoxville, Tennessee 37922-1968

November 1994

TABLE OF CONTENTS
Precision, Accuracy, Representativeness,
Comparability, and Completeness
NCBC Gulfport HO

Section	Title	Page No.
1.0	INTRODUCTION	1-1
2.0	PRECISION	2-1
2.1	Water Matrix	2-19
3.0	ACCURACY	3-1
3.1	Water Matrix	3-1
4.0	REPRESENTATIVENESS	4-1
4.1	Trip Blanks	4-34
4.2	Field Blanks	4-34
4.3	Equipment Rinseate Blanks	4-35
4.4	Method Blanks	4-35
4.5	Holding Times	4-36
5.0	COMPARABILITY	5-1
6.0	COMPLETENESS	6-1
7.0	PARCC SUMMARY	7-1
7.1	Water Matrix	7-1
7.3	QC Matrix	7-1

REFERENCES

APPENDICES

Appendix A: Calibration Summary
Appendix B: Serial Dilution Summary
Appendix C: Summary of Rejected Data

LIST OF TABLES
Precision, Accuracy, Representativeness,
Comparability, and Completeness
NCBC Gulfport HO

Tables	Title	Page No.
2-1	Organic Compounds, Water Sample and Duplicate Precision	2-2
2-2	Inorganic Compounds, Water Sample and Duplicate Precision	2-6
2-3	GC/MS Volatile Organic Compounds, Water Matrix Spike and Matrix Spike Duplicates	2-8
2-4	Dioxin/Furan Compounds, Water Matrix Spike and Matrix Spike Duplicates	2-9
2-5	Semivolatile Organic Compounds, Water Matrix Spike and Matrix Spike Duplicates	2-10
2-6	Polynuclear Aromatic Hydrocarbons, Water Matrix Spike and Matrix Spike Duplicates	2-12
2-7	Pesticide/PCBs, Water Matrix Spike and Matrix Spike Duplicates	2-13
2-8	Organophosphorous Pesticides, Water Matrix Spike and Matrix Spike Duplicates	2-14
2-9	Herbicides, Water Matrix Spike and Matrix Spike Duplicates	2-15
2-10	Metals, Water Matrix Spike and Matrix Duplicates	2-16
2-11	Cyanide, Water Matrix Spike and Matrix Duplicates	2-17
2-12	Sulfide, Water Matrix Spike and Matrix Duplicates	2-18
3-1	GC/MS Volatile Surrogate Recoveries in Water Matrix	3-2
3-2	Dioxin/Furan Internal Standard Recoveries in Water Matrix	3-3
3-3	Semivolatile Surrogate Recoveries in Water Matrix	3-4
3-4	Polynuclear Aromatic Hydrocarbons Surrogate Recoveries in Water Matrix	3-5
3-5	Pesticides/PCBs Surrogate Recoveries in Water Matrix	3-6
3-6	Kepone Surrogate Recoveries in Water Matrix	3-7
3-7	Organophosphorous Pesticides Surrogate Recoveries in Water Matrix	3-8
3-8	Herbicides Surrogate Recoveries in Water Matrix	3-9
4-1	GC/MS Volatiles Detected in Trip Blanks	4-2
4-2	GC/MS Volatiles Detected in Field Blanks	4-3
4-3	Dioxin/Furans Detected in Field Blanks	4-4
4-4	GC/MS Semivolatiles Detected in Field Blanks	4-5
4-5	Polynuclear Aromatic Hydrocarbons Detected in Field Blanks	4-6
4-6	Pesticide/PCBs Detected in Field Blanks	4-7
4-7	Kepone Detected in Field Blanks	4-8
4-8	Organophosphorous Pesticides Detected in Field Blanks	4-9
4-9	Herbicides Detected in Field Blanks	4-10
4-10	Metals Detected in Field Blanks	4-11
4-11	Cyanide Detected in Field Blanks	4-12
4-12	Sulfide Detected in Field Blanks	4-13
4-13	GC/MS Volatiles Detected in Rinseate Blanks	4-14
4-14	Dioxin/Furans Detected in Rinseate Blanks	4-15
4-15	GC/MS Semivolatiles Detected in Rinseate Blanks	4-16
4-16	Polynuclear Aromatic Hydrocarbons Detected in Rinseate Blanks	4-17
4-17	Pesticide/PCBs Detected in Rinseate Blanks	4-18
4-18	Kepone Detected in Rinseate Blanks	4-19
4-19	Organophosphorous Pesticides Detected in Rinseate Blanks	4-20
4-20	Herbicides Detected in Rinseate Blanks	4-21
4-21	Metals Detected in Rinseate Blanks	4-22
4-22	Cyanide Detected in Rinseate Blanks	4-23
4-23	Sulfide Detected in Rinseate Blanks	4-24

LIST OF TABLES
Precision, Accuracy, Representativeness,
Comparability, and Completeness
NCBC Gulfport HO

Tables	Title	Page No.
4-24	GC/MS Volatiles Detected in Method Blanks	4-25
4-25	Dioxin/Furans Detected in Method Blanks	4-26
4-26	GC/MS Semivolatiles Detected in Method Blanks	4-27
4-27	Polynuclear Aromatic Hydrocarbons Detected in Method Blanks	4-28
4-28	Pesticide/PCBs Detected in Method Blanks	4-29
4-29	Kepone Detected in Method Blanks	4-30
4-30	Organophosphorous Pesticides Detected in Method Blanks	4-31
4-31	Herbicides Detected in Method Blanks	4-32
4-32	Metals Detected in Method Blanks	4-33
5-1	USEPA Procedure (SW-846 Methodologies	5-1
6-1	Completion Goal (>85 Percent)	6-1
7-1	PARCCs Criteria Summary, Water Samples	7-2
7-2	PARCCs Criteria Summary, Quality Control Samples	7-4

Appendix A
Calibration Criteria Summary

NCBC Gulfport HO

Tables	Title	Page No.
A-1	GC/MS Volatile Organic Compounds, Initial and Continuing Calibration Outlier Summary	Appendix A
A-2	GC/MS Semivolatile Organic Compounds, Initial and Continuing Calibration Outlier Summary	Appendix A

Appendix B
Serial Dilution Summary

NCBC Gulfport HO

Tables	Title	Page No.
B-1	Metals, Water Sample Serial Dilution Summary	Appendix B

Appendix C
Rejected Data Summary

NCBC Gulfport HO

Tables	Title	Page No.
C-1	GC/MS Volatile Organic Compounds, Rejected Data Summary	Appendix C
C-2	Dioxin/Furans, Rejected Data Summary	Appendix C
C-3	GC/MS Semivolatile Organic Compounds, Rejected Data Summary	Appendix C
C-4	Polynuclear Aromatic Hydrocarbons, Rejected Data Summary	Appendix C
C-5	Pesticide/PCBs, Rejected Data Summary	Appendix C
C-6	Organophosphorous Pesticides, Rejected Data Summary	Appendix C
C-7	Herbicides, Rejected Data Summary	Appendix C
C-8	Kepone, Rejected Data Summary	Appendix C
C-9	Metals, Rejected Data Summary	Appendix C
C-10	Cyanide, Rejected Data Summary	Appendix C
C-11	Sulfide, Rejected Data Summary	Appendix C

1.0 INTRODUCTION

Prior to evaluating the data for precision, accuracy, representativeness, comparability, and completeness (PARCC) criteria the laboratory reviewed the data package and the data also were independently reviewed and validated using the Naval Energy and Environmental and Support Activity (NEESA) guidance document 20.2-047B (1988) entitled, *Sampling and Chemical Analysis Quality Assurance Requirements for the Navy Installation Program*. Before the laboratory released the chemical analytical results, both the sample and laboratory QC data were carefully reviewed in order to verify sample identity, instrument calibration, detection limits, dilution factors, numerical computations, accuracy of transcriptions, and chemical interpretations. Additionally, the QC data were reduced and spike recoveries were included in control charts, and the resulting data were reviewed to ascertain whether they were within the laboratory defined limits for accuracy and precision. The data were compiled into a NEESA Level D data package and any nonconforming data were discussed in the data package cover letter and case narrative.

The Level D data packages were then reviewed and validated by Heartland Environmental Services, Inc., Missouri (Heartland). Data validation is the technical review of a data package using criteria established in the data quality objectives, the quality assurance project plan and guidance documents prepared by the United States Environmental Protection Agency (USEPA) for the validation of organic and inorganic analytical data (USEPA 1990a and 1990b) as specified by NEESA document 20.2-047B. The data review and validation process is independent of the laboratory's checks because it is impossible to repeat the review conducted by the laboratory.

Samples that did not meet the acceptance limit criteria were qualified with a flag; single letter abbreviations that indicate a problem with the data. Data qualifiers used by the validators when amending the data include the following.

U — Undetected. The analyte was not detected above the contract required quantitation limit (CRQL). The "U" designator also is used to qualify laboratory contaminants. The "U" designator is applied to an environmental sample when the laboratory contaminant is detected in an environmental sample at a concentration less than 5 times (10 X for common contaminants) the value of the concentration detected in any corresponding field QC blank, method blank or preparation blanks.

J — Estimated. The analyte was present, but the reported value may not be accurate or precise. The "J" designator is used to qualify an analyte that was present at a concentration between the CRQL and method detection limit (MDL) or the data "failed" some of the analytical validation criteria but did not require rejections of the data. When combined with the U designator, the quantitation limit is estimated.

R — Rejected. Data was rejected by the data validator during comparison of the NEESA Level D data package with the analytical functional guideline criteria. The "R" designator indicates a significant variance in acceptable laboratory performance. Either re-analysis or re-sampling and analysis would be necessary to determine the presence or absence of the target analyte(s).

Once the data were reviewed and validated according to the guidance presented in NEESA document 20.2-047B, the data were evaluated by Heartland using the PARCCs criteria included in the Data Quality Objectives (DQOs) of the Work Plan for Naval Construction Battalion Center (NCBC) Gulfport, Mississippi, dated October 1993. The following sections present a brief description of PARCCs criteria.

Precision. Precision is a measure of the agreement or repeatability of a set of replicate results obtained from duplicate laboratory analyses of samples collected from the same location/depth interval. Precision was calculated from laboratory analytical data and cannot be measured directly. Precision is expressed as the Relative Percent Difference (RPD) between analytical values for two samples divided by the average of their analytical values. Precision is calculated using the expression:

$$RPD = (D1-D2) / (\tfrac{1}{2}(D1+D2)) \times 100$$

D1 and D2 are the reported values for the duplicate sample pair. Precision was evaluated using field duplicate samples and laboratory split samples (for example, MS/MSD samples).

Precision for environmental samples and their duplicates was assessed using a maximum RPD of 20 Percent for water matrices. Precision for MS/MSD/MD samples was assessed by using the target analyte specific RPD criteria for the spiked compounds and the sample duplicates.

Accuracy. Accuracy is a measure of the agreement between an experimental determination and the true value of the parameter being measured. Accuracy can be calculated from the analytical data and was not measured directly. Accuracy is used to identify the bias in a given measurement system (i.e. laboratory conditions, sample matrix, and sampling conditions). Accuracy is assessed by reviewing the Percent Recovery (%R) between the true value of the spike analyte and the actual analytical value. Accuracy is calculated using the equation:

$$\%R = ((A-B)/C) \times 100$$

A	=	Measured concentration of the spiked analyte.
B	=	Measured concentration of the spiked compound in the unspiked sample.
C	=	True concentration of the spiked analyte.

For the organic analyses, each of the samples was spiked with a surrogate compound; and for inorganic analyses, each chosen matrix spike and matrix duplicate pair was spiked with a known reference material before digestion. The recovery of the internals standards was used to assess accuracy for the Dioxin/Furan fraction. Each of these approaches provides a measure of the matrix effects on the analytical accuracy.

Representativeness. Representativeness is a qualitative measure of the degree to which sample data accurately and precisely represent a characteristic environmental condition. Representativeness is a subjective parameter and is used to evaluate the efficacy of the sampling plan design. Representativeness was evaluated using the field and laboratory QC blank sample results. QC blank samples are equipment rinseate blanks, field blanks, trip blanks, laboratory method blanks for organic analysis and laboratory preparation blanks for inorganic analysis. Positive detection of target analytes in the QC blank samples identify contaminants that possibly were introduced to the associated environmental sample during sample collection, transport or laboratory analysis. Representativeness was also evaluated used the defined extraction and analytical holding time requirements set forth in the Work Plan for NCBC Gulfport or the analytical methodology.

Comparability. Comparability is qualitative measure designed to express the confidence with which one data set may be compared to another. Factors that affect comparability are: sample collection and handling techniques, sample matrix type, and analytical method. Comparability is limited by the other PARCC parameters because only when precision and accuracy are known can data sets be compared with confidence.

Completeness. Completeness is defined as the percentage of measurements that are judged to be valid compared to the total number of measurements made. Valid usable data are values that were not qualified as rejected (R qualifier) during data validation. A goal of 85 percent usable data was established in the Work Plan for NCBC, Gulfport, Mississippi. Completeness equals the total number of analytes for each matrix minus the total number of rejected analytes divided by the total number of analytes multiplied by 100.

2.0 PRECISION

The following section describes the evaluation of precision for volatile organic compounds, dioxin/furans, semivolatile organic compounds, polynuclear aromatic hydrocarbons, pesticides and polychlorinated biphenyls (PCBs), organophosphorous pesticides, herbicides, metals and cyanide, and the wet chemistry parameter sulfide. Duplicate samples are evaluated for precision only when contaminants are detected in both the environmental sample and the sample's duplicate. A ND in the RPD column of the spreadsheet indicates that a RPD calculation was not required because one result was a non-detect and the other result was less than the compound/analyte CRQL/CRDL. Environmental samples and their respective duplicates may not exhibit positive results for all compounds found at or near the contract required quantitation limit (CRQL) or detection limit (CRDL) because of low levels of contamination found at a site. Duplicates with Relative Percent Differences (RPDs) within control limits indicate adequate sampling practices and/or good analytical precision. Duplicates with RPDs outside the control limits may result from inappropriate sampling procedures, matrix interferences, or non-homogeneity of the sample matrix. In addition, poor precision can be attributed to deviation(s) from the analytical methodology or to poor reproducibility of target analyte concentrations at or near the required quantitation or detection limits (CRQLs or CRDLs). The acceptance criteria for evaluating precision of field duplicates analytical results is a RPD of 20 for water matrices.

The percent of duplicate samples collected for the analytical parameters and sample matrices was greater than ten percent (10%) for the water matrix as specified in the Work Plan for NCBC Gulfport, Mississippi. The following Sections summarize the evaluation of analytical precision for the water matrix for the following analytical groups:

- GC/MS volatile organic compounds (GC/MS VOCs);
- dioxin/furan compounds (D/Fs);
- semivolatile organic compounds (SVOCs);
- polynuclear aromatic hydrocarbons (PAHs);
- pesticides, PCBs (P/Ps);
- organophosphorous pesticides (OPPs);
- herbicides; and
- metals, cyanide, & sulfide.

Duplicate precision was assessed using both environmental sample and associated duplicates and matrix spike (MS)/matrix spike duplicates (MSDs) pairs for organic fractions, and matrix duplicate pairs (MD pairs) for the metals/cyanide, and sulfide fractions.

Tabulation of the results of assessing duplicate precision and duplicate frequency are presented in Tables 2-1 and 2-2 for the water matrix. The results of the evaluation of precision for MS/MSD samples is provided in Tables 2-3 through 2-12 for the water matrix.

In addition, to assess whether instrument calibration for volatile and semivolatile analytical methods resulted in non-compliant duplicate precision, tables were made of initial and continuing calibration outliers for each sample delivery group (SDG) and are included in Appendix A. Calibration criteria was met or the non-compliance did not result in data qualification in the other organic fractions. Therefore, tables of calibration criteria were not prepared for those fractions. To assess the potential for non-compliance in metals analytical data, caused by physical and/or chemical interferences and indicated by non-compliant serial dilution results, tables were prepared of serial dilution results. These are included in Appendix B.

TABLE 2 - 1

ORGANIC FRACTIONS
WATER SAMPLE AND DUPLICATE PRECISION
NCBC GULFPORT HO

VOLATILES

SDG	SAMPLE ID	MATRIX	NO. ASSC. SAMPLES	COMPOUND	SAMPLE CONC.	DUP CONC	MAX RPD	RPD
R8548	GPTH02-1	WATER	4	ACETONE	6	0	20%	ND
				TRICHLOROFLUOROMETHANE	0	2	20%	ND
	TOTAL SAMPLES		4					

SEMIVOLATILES

SDG	SAMPLE ID	MATRIX	NO. ASSC. SAMPLES	COMPOUND	SAMPLE CONC.	DUP CONC	MAX RPD	RPD
R8548	GPTH02-1	WATER	4	NO COMPOUNDS DETECTED				
	TOTAL SAMPLES		4					

DIOXIN/FURANS

SDG	SAMPLE ID	MATRIX	NO. ASSC. SAMPLES	COMPOUND	SAMPLE CONC.	DUP CONC	MAX RPD	RPD
R8548	GPTH02-1	WATER	4	OCDD	44.7	0	20%	200%
	TOTAL SAMPLES		4					

POLYNUCLEAR AROMATIC HYDROCARBONS

SDG	SAMPLE ID	MATRIX	NO. ASSC. SAMPLES	COMPOUND	SAMPLE CONC.	DUP CONC	MAX RPD	RPD
R8548	GPTH02-1	WATER	4	NO COMPOUNDS DETECTED				
	TOTAL SAMPLES		4					

PESTICIDES/PCBS/KEPONE

SDG	SAMPLE ID	MATRIX	NO. ASSC. SAMPLES	COMPOUND	SAMPLE CONC.	DUP CONC	MAX RPD	RPD
R8548	GPTH02-1	WATER	4	NO COMPOUNDS DETECTED				
	TOTAL SAMPLES		4					

TABLE 2 - 1, CONTINUED

ORGANIC FRACTIONS
WATER SAMPLE AND DUPLICATE PRECISION
NCBC GULFPORT HO

ORGANOPHOSPHOROUS PESTICIDES

SDG	SAMPLE ID	MATRIX	NO. ASSC. SAMPLES	COMPOUND	SAMPLE CONC.	DUP CONC	MAX RPD	RPD
R8548	GPTH02-1	WATER	4	NO COMPOUNDS DETECTED			20%	
	TOTAL SAMPLES		4					

CHLORINATED HERBICIDES

SDG	SAMPLE ID	MATRIX	NO. ASSC. SAMPLES	COMPOUND	SAMPLE CONC.	DUP CONC	MAX RPD	RPD
R8548	GPTH02-1	WATER	4	NO COMPOUNDS DETECTED			20%	
	TOTAL SAMPLES		4					

TABLE 2 - 1, CONTINUED

ORGANIC FRACTIONS
WATER SAMPLE AND DUPLICATE PRECISION
NCBC GULFPORT HO

VOLATILES

% OF DUPLICATES COLLECTED	RPD IN	RPD OUT	% WITHIN RPD LIMIT
25.0%	2	0	100.0%

SEMI VOLATILES

% OF DUPLICATES COLLECTED	RPD IN	RPD OUT	% WITHIN RPD LIMIT
25.0%	1	0	100.0%

DIOXIN/FURANS

% OF DUPLICATES COLLECTED	RPD IN	RPD OUT	% WITHIN RPD LIMIT
25.0%	0	1	0.0%

POLYNUCLEAR AROMATIC HYDROCARBONS

% OF DUPLICATES COLLECTED	RPD IN	RPD OUT	% WITHIN RPD LIMIT
25.0%	1	0	100.0%

PESTICIDES/PCBS

% OF DUPLICATES COLLECTED	RPD IN	RPD OUT	% WITHIN RPD LIMIT
25.0%	1	0	100.0%

ND - INDICATES RPD CALCULATION NOT REQUIRED BECAUSE ONE (1) RESULT IS NON-DETECT AND THE OTHER RESULT IS BELOW THE CRQL.

TABLE 2 - 1, CONTINUED

ORGANIC FRACTIONS
WATER SAMPLE AND DUPLICATE PRECISION
NCBC GULFPORT HO

ORGANOPHOSPHOROUS PESTICIDES

% OF DUPLICATES COLLECTED	RPD IN	RPD OUT	% WITHIN RPD LIMIT
25.0%	1	0	100.0%

CHLORINATED HERBICIDES

% OF DUPLICATES COLLECTED	RPD IN	RPD OUT	% WITHIN RPD LIMIT
25.0%	1	0	100.0%

ND - INDICATES RPD CALCULATION NOT REQUIRED BECAUSE ONE (1) RESULT IS NON-DETECT AND THE OTHER RESULT IS BELOW THE CRQL.

TABLE 2 - 2

INORGANIC FRACTIONS
WATER SAMPLE AND DUPLICATE PRECISION
NCBC GULFPORT HO

METALS

SDG	SAMPLE ID	MATRIX	NO. ASSC. SAMPLES	COMPOUND	SAMPLE CONC.	DUP CONC	MAX RPD	RPD
R8548	GPTH02-1	WATER	4	ARSENIC	24.3	23.6	20%	3%
				BARIUM	218	222	20%	2%
				BERYLLIUM	1.7	2.1	20%	21%
				CADMIUM	1.3	0	20%	ND
				CHROMIUM	58	65	20%	11%
				COBALT	15.9	15.8	20%	1%
				COPPER	23.8	25.2	20%	6%
				LEAD	23.2	24.7	20%	6%
				MERCURY	0.12	0	20%	ND
				NICKEL	38.7	45.6	20%	16%
				SELENIUM	2.4	1.8	20%	29%
				VANADIUM	63.7	65.2	20%	2%
				ZINC	67.7	66.2	20%	2%
	TOTAL SAMPLES		4					

CYANIDE

SDG	SAMPLE ID	MATRIX	NO. ASSC. SAMPLES	COMPOUND	SAMPLE CONC.	DUP CONC	MAX RPD	RPD
R8548	GPTH02-1	WATER	4	NO COMPOUND DETECTED				
	TOTAL SAMPLES		4					

SULFIDE

SDG	SAMPLE ID	MATRIX	NO. ASSC. SAMPLES	COMPOUND	SAMPLE CONC.	DUP CONC	MAX RPD	RPD
R8548	GPTH02-1	WATER	4	NO COMPOUND DETECTED				
	TOTAL SAMPLES		4					

TABLE 2 - 2
INORGANIC FRACTIONS
WATER SAMPLE AND DUPLICATE PRECISION
NCBC GULFPORT HO

METALS

% OF DUPLICATE COLLECTED	RPD IN	RPD OUT	% WITHIN RPD LIMIT
25.0%	11	2	85%

CYANIDE

% OF DUPLICATE COLLECTED	RPD IN	RPD OUT	% WITHIN RPD LIMIT
25.0%	1	0	100.0%

SULFIDE

% OF DUPLICATE COLLECTED	RPD IN	RPD OUT	% WITHIN RPD LIMIT
25.0%	1	0	100.0%

ND - INDICATES RPD CALCULATION NOT REQUIRED BECAUSE ONE (1) RESULT IS NON-DETECT AND THE OTHER RESULT IS BELOW THE CRDL.

TABLE 2 - 3

GC/MS VOLATILE ORGANICS COMPOUNDS
WATER SAMPLE MATRIX SPIKE/MATRIX SPIKE DUPLICATES
NCBC GULFPORT HO

MS = MATRIX SPIKE *SAMPLE GPTH02-1*		SDG R8548		
MSD = MATRIX SPIKE DUPLICATE		MS	MSD	
RPD = RELATIVE PERCENT DIFFERENCE		%R	%R	%RPD
VOA COMPOUNDS	UNITS			
1,1-DICHLOROETHENE	ug/L	90	101	12
TRICHLOROETHENE	ug/L	90	99	10
BENZENE	ug/L	91	102	11
TOLUENE	ug/L	87	102	15*
CHLOROBENZENE	ug/L	88	100	13

*** DENOTES VALUE NOT WITHIN QA/QC ADVISORY LIMITS**

CORRESPONDING SDG'S AND ASSOCIATED SAMPLES

R8548: GPTH02-1, GPTH02-2, GPTH02-3, GPTH02-4, GPTH02-1D

COMPOUND	ADVISORY LIMITS		RPD
	%R WATER		WATER
1,1-DICHLOROETHENE	61%-145%		14
TRICHLOROETHENE	71%-120%		14
BENZENE	76%-127%		11
TOLUENE	76%-125%		13
CHLOROBENZENE	75%-130%		13

TABLE 2 - 4

DIOXIN/FURAN
WATER SAMPLE MATRIX SPIKE/ DUPLICATES
NCBC GULFPORT HO

MS = MATRIX SPIKE *SAMPLE GPTH02-1*		SDG R8548		
MSD = MATRIX SPIKE DUPLICATE		MS	MSD	
RPD = RELATIVE PERCENT DIFFERENCE		%R	%R	RPD
DIOXIN/FURAN CONGENERS	UNITS			
2378-TCDD	ug/L	157	102	*42.4
2378-TCDF	ug/L	106	116	9.5
12378-P5CDD	ug/L	94.8	94.8	0.1
12378-P5CDF	ug/L	87.6	97.6	10.8
23478-P5CDF	ug/L	103	91.2	12.2
123478-H6CDD	ug/L	112	100	11.9
123789-H6CDD	ug/L	89.2	101	12.6
123678-H6CDD	ug/L	132	102	26.3
123478-H6CDF	ug/L	93.6	104	10.3
123678-H6CDF	ug/L	86.4	92.8	7.1
123789-H6CDF	ug/L	95.6	94.4	1.3
234678-H6CDF	ug/L	100	100	0.6
1234678-H7CDD	ug/L	99.2	97.2	1.9
1234678-H7CDF	ug/L	91.6	112	20.3
1234789-H7CDF	ug/L	104	114	9.5
OCDD	ug/L	89.8	101	15.3
OCDF	ug/L	*256	*318	21.6

*** DENOTES VALUE NOT WITHIN QA/QC ADVISORY LIMITS**

CORRESPONDING SDG'S AND ASSOCIATED SAMPLES

R8548: GPTH02-1, GPTH02-1D, GPTH02-2, GPTH02-3, GPTH02-4

QC LIMITS WERE NOT PROVIDED BY THE LABORATORY.

TABLE 2 - 5

SEMIVOLATILE ORGANICS COMPOUNDS
WATER SAMPLE MATRIX SPIKE/MATRIX SPIKE DUPLICATES
NCBC GULFPORT HO

MS = MATRIX SPIKE *SAMPLE GPTHO2-1*		SDG R8548		
MSD = MATRIX SPIKE DUPLICATE		MS	MSD	
RPD = RELATIVE PERCENT DIFFERENCE		%R	%R	%RPD
SVOA COMPOUNDS	UNITS			
PHENOL	ug/L	70	77	10
2-CHLOROPHENOL	ug/L	74	82	10
1,4-DICHLOROBENZENE	ug/L	80	71	12
N-NITROSO-DI-N-PROP.(1)	ug/L	75	73	3
1,2,4-TRICHLOROBENZENE	ug/L	80	77	4
4-CHLORO-3-METHYLPHENOL	ug/L	74	90	20
ACENAPHTHENE	ug/L	84	79	6
4-NITROPHENOL	ug/L	103*	124*	19
2,4-DINITROTOLUENE	ug/L	45	47	4
PENTACHLOROPHENOL	ug/L	59	69	16
PYRENE	ug/L	68	65	5

*** DENOTES VALUE NOT WITHIN QA/QC ADVISORY LIMITS**

CORRESPONDING SDG'S AND ASSOCIATED SAMPLES

R8548: GPTH02-1, GPTH02-2, GPTH02-3, GPTH02-4, GPTH02-1D

COMPOUND	ADVISORY LIMITS	RPD
	% R WATER	WATER
PHENOL	12%-89%	42
2-CHLOROPHENOL	27%-123%	40
1,4-DICHLOROBENZENE	36%-97%	28
N-NITROSO-DI-N-PROP.(1)	41%-116%	38
1,2,4-TRICHLOROBENZENE	39%-98%	28
4-CHLORO-3-METHYLPHENOL	23%-97%	42
ACENAPHTHENE	46%-118%	31
4-NITROPHENOL	10%-80%	50
2,4-DINITROTOLUENE	24%-96%	38
PENTACHLOROPHENOL	9%-103%	50
PYRENE	26%-127%	31

TABLE 2 - 5, CONTINUED

SEMIVOLATILE ORGANICS COMPOUNDS
WATER SAMPLE MATRIX SPIKE/MATRIX SPIKE DUPLICATES
NCBC GULFPORT HO

MS = MATRIX SPIKE *SAMPLE GPTHO2-1RE*		SDG R8548		
MSD = MATRIX SPIKE DUPLICATE		MS	MSD	
RPD = RELATIVE PERCENT DIFFERENCE		%R	%R	%RPD
SVOA COMPOUNDS	UNITS			
PHENOL	ug/L	74	84	13
2-CHLOROPHENOL	ug/L	78	88	12
1,4-DICHLOROBENZENE	ug/L	70	81	15
N-NITROSO-DI-N-PROP.(1)	ug/L	71	85	18
1,2,4-TRICHLOROBENZENE	ug/L	76	86	12
4-CHLORO-3-METHYLPHENOL	ug/L	81	92	13
ACENAPHTHENE	ug/L	81	92	13
4-NITROPHENOL	ug/L	110*	126*	14
2,4-DINITROTOLUENE	ug/L	61	66	8
PENTACHLOROPHENOL	ug/L	77	90	16
PYRENE	ug/L	86	97	12

*** DENOTES VALUE NOT WITHIN QA/QC ADVISORY LIMITS**

CORRESPONDING SDG'S AND ASSOCIATED SAMPLES

R8548: GPTH02-1RE, GPTH02-1DRE

COMPOUND	ADVISORY LIMITS	RPD
	% R WATER	WATER
PHENOL	12%-89%	42
2-CHLOROPHENOL	27%-123%	40
1,4-DICHLOROBENZENE	36%-97%	28
N-NITROSO-DI-N-PROP.(1)	41%-116%	38
1,2,4-TRICHLOROBENZENE	39%-98%	28
4-CHLORO-3-METHYLPHENOL	23%-97%	42
ACENAPHTHENE	46%-118%	31
4-NITROPHENOL	10%-80%	50
2,4-DINITROTOLUENE	24%-96%	38
PENTACHLOROPHENOL	9%-103%	50
PYRENE	26%-127%	31

TABLE 2 - 6

POLYNUCLEAR AROMATIC HYDROCARBONS
WATER SAMPLE MATRIX SPIKE/MATRIX SPIKE DUPLICATES
NCBC GULFPORT HO

MS = MATRIX SPIKE *SAMPLE GPTH02-1*		SDG R8548		
MSD = MATRIX SPIKE DUPLICATE		MS	MSD	
RPD = RELATIVE PERCENT DIFFERENCE		%R	%R	%RPD
PAH COMPOUNDS	UNITS			
NAPTHALENE	ug/L	36	50	33
ACENAPHTHYLENE	ug/L	36*	55	42
ACENAPHTHENE	ug/L	46	65	34
FLUORENE	ug/L	41*	55	29
PHENANTHRENE	ug/L	49*	65	29
ANTHRACENE	ug/L	33*	46	33
FLUORANTHENE	ug/L	41*	55	30
PYRENE	ug/L	39*	62	46
BENZO(A)ANTHRACENE	ug/L	38	50	29
CHRYSENE	ug/L	38	51	29
BENZO(B)FLUORANTHENE	ug/L	29*	38	27
BENZO(K)FLUORANTHENE	ug/L	24*	32*	29
BENZO(A)PYRENE	ug/L	23*	28*	20
DIBENZO(A,H)ANTHRACENE	ug/L	21*	28*	29
INDENO(1,2,3-CD)PYRENE	ug/L	17*	24*	34
BENZO(G,H,I)PERYLENE	ug/L	*14	20*	36

*** DENOTES VALUE NOT WITHIN QA/QC ADVISORY LIMITS**

CORRESPONDING SDG AND ASSOCIATED SAMPLES

R8548: GPTH02-1, GPTH02-2, GPTH02-3, GPTH02-4, GPTH02-1D

QC LIMITS WERE NOT PROVIDED BY THE LABORATORY.

TABLE 2 - 7

PESTICIDES/PCBS
WATER SAMPLE MATRIX SPIKE/MATRIX SPIKE DUPLICATES
NCBC GULFPORT HO

MS = MATRIX SPIKE *SAMPLE GPTH02-1*		SDG R8548		
MSD = MATRIX SPIKE DUPLICATE		MS	MSD	
RPD = RELATIVE PERCENT DIFFERENCE		%R	%R	%RPD
PEST COMPOUNDS	UNITS			
gamma-BHC (Lindane)	ug/L	105	99	6.0
Heptachlor	ug/L	82	77	5.5
Aldrin	ug/L	64	62	2.5
Dieldrin	ug/L	100	95	5.2
Endrin	ug/L	109	104	5.2
4,4'-DDT	ug/L	71	66	6.6

*** DENOTES VALUE NOT WITHIN QA/QC ADVISORY LIMITS**

CORRESPONDING SDG AND ASSOCIATED SAMPLES

R8548: GPTH02-1, GPTH02-2, GPTH02-3, GPTH02-4, GPTH02-1D

COMPOUND	ADVISORY LIMITS		RPD
	% R WATER		WATER
gamma-BHC(Lindane)	56%-123%		15
HEPTACHLOR	40%-131%		20
ALDRIN	40%-120%		22
DIELDRIN	52%-126%		18
ENDRIN	56%-121%		21
4,4'-DDT	38%-127%		27

TABLE 2 - 8

ORGANOPHOSPHOROUS PESTICIDES
WATER SAMPLE MATRIX SPIKE/MATRIX SPIKE DUPLICATES
NCBC GULFPORT HO

MS = MATRIX SPIKE *SAMPLE GPTH02-01*		SDG R8548		
MSD = MATRIX SPIKE DUPLICATE		MS	MSD	
RPD = RELATIVE PERCENT DIFFERENCE		%R	%R	%RPD
OPP COMPOUNDS	UNITS			
PHORATE	ug/L	80	73	10
DISULFOTON	ug/L	97	96	1
METHYL PARATHION	ug/L	97	88	9
ETHYL PARATHION	ug/L	101	94	7

*** DENOTES VALUE NOT WITHIN QA/QC ADVISORY LIMITS**

CORRESPONDING SDG AND ASSOCIATED SAMPLES

R8548: GPTH02-1, GPTH02-2, GPTH02-3, GPTH02-4, GPTH02-1D

NO QC LIMITS WERE REPORTED BY THE LABORATORY.
RECOVERIES WERE DEEMED IN CONTROL BY THE DATA VALIDATOR.

TABLE 2 - 9

HERBICIDES
WATER SAMPLE MATRIX SPIKE.MATRIX SPIKE DUPLICATES
NCBC GULFPORT HO

MS = MATRIX SPIKE *SAMPLE GPTH02-1*		SDG R8548		
MSD = MATRIX SPIKE DUPLICATE		MS	MSD	
RPD = RELATIVE PERCENT DIFFERENCE		%R	%R	%RPD
HERB COMPOUNDS	UNITS			
2,4-D	ug/L	75	65	14
SILVEX	ug/L	80	65	21
2,4,5-T	ug/L	80	65	21
DINOSEB	ug/L	38	32	17

*** DENOTES VALUE NOT WITHIN QA/QC ADVISORY LIMITS**

CORRESPONDING SDG AND ASSOCIATED SAMPLES

R8548: GPTH02-1, GPTH02-2, GPTH02-3, GPTH02-4, GPTH02-1D

NO QC LIMITS WERE REPORTED BY THE LABORATORY.
RECOVERIES AND RPDS WERE DEEMED IN CONTROL BY DATA VALIDATOR.

TABLE 2 - 10

METALS AND CYANIDE
WATER SAMPLE MATRIX SPIKE/ DUPLICATES
NCBC GULFPORT HO

MS = MATRIX SPIKE *SAMPLE GPTH02-1*		SDG R8548	
MD = MATRIX DUPLICATE *SAMPLE GPTHOGW-1D*		MS	MD
RPD = RELATIVE PERCENT DIFFERENCE		%R	RPD
METALS COMPOUNDS	UNITS		
ANTIMONY	ug/L	83.7	NC
ARSENIC	ug/L	89.2	0.0
BARIUM	ug/L	103.2	3.2
BERYLLIUM	ug/L	104	0.6
CADMIUM	ug/L	104.5	200
CHROMIUM	ug/L	105.3	4.9
COBALT	ug/L	103.7	15
COPPER	ug/L	100.9	12
LEAD	ug/L	97	1.3
MERCURY	ug/L	95	0
NICKEL	ug/L	102.7	0
SELENIUM	ug/L	71.4*	3.8
SILVER	ug/L	101.7	NC
THALLIUM	ug/L	89.4	NC
VANADIUM	ug/L	101.7	6.0
ZINC	ug/L	99.4	9.4
TIN	ug/L	98.6	NC

*** DENOTES VALUE NOT WITHIN QA/QC ADVISORY LIMITS**

NC DENOTES THAT BOTH SAMPLES ARE NON-DETECT AND A RPD CANNOT BE CALCULATED.
NR DENOTES THAT A MATRIX SPIKE RECOVERY CALCULATION IS NOT REQUIRED.

CORRESPONDING SDG'S AND ASSOCIATED SAMPLES

R8548: GPTH02-1, GPTH02-2, GPTH02-3, GPTH02-4, GPTH02-1D

COMPOUND	ADVISORY LIMITS		RPD
	%R WATER		WATER
ALL COMPOUNDS	75%-125%		+/-20 OR +/-CRDL

+/- CRDL = RPD Limits applicable only on values 5 times the Contract Required Detection Limit (CRDL)

TABLE 2 - 11

CYANIDE
WATER SAMPLE MATRIX SPIKE/ DUPLICATES
NCBC GULFPORT HO

MS = MATRIX SPIKE *SAMPLE GPTH02-1*		SDG R8548	
MD = MATRIX DUPLICATE *SAMPLE GPTH02-1*		MS	MD
RPD = RELATIVE PERCENT DIFFERENCE		%R	RPD
	UNITS		
CYANIDE	ug/L	92.6	NC

*** DENOTES VALUE NOT WITHIN QA/QC ADVISORY LIMITS**

NC DENOTES THAT BOTH SAMPLES ARE NON-DETECT AND A RPD CANNOT BE CALCULATED.

CORRESPONDING SDG'S AND ASSOCIATED SAMPLES

R8548: GPTH02-1, GPTH02-2, GPTH02-3, GPTH02-4, GPTH02-1D

MS = MATRIX SPIKE *SAMPLE BS-01-D12*		SDG R8520	
MD = MATRIX DUPLICATE *SAMPLE BS-01-D12*		MS	MD
RPD = RELATIVE PERCENT DIFFERENCE		%R	RPD
	UNITS		
CYANIDE	ug/L	90.7	NC

*** DENOTES VALUE NOT WITHIN QA/QC ADVISORY LIMITS**

NC DENOTES THAT BOTH SAMPLES ARE NON-DETECT AND A RPD CANNOT BE CALCULATED.

CORRESPONDING SDG'S AND ASSOCIATED SAMPLES

R8520: BS-01-D12, BS-01-P12

COMPOUND	ADVISORY LIMITS		RPD
	%R WATER		WATER
CYANIDE	75%-125%		+/-20

TABLE 2 - 12

SULFIDE
WATER SAMPLE MATRIX SPIKE/ DUPLICATES
NCBC GULFPORT HO

MS = MATRIX SPIKE *SAMPLE GPTH02-1*		SDG R8548	
MD = MATRIX DUPLICATE *SAMPLE GPTHO2-1*		MS	MD
RPD = RELATIVE PERCENT DIFFERENCE		%R	RPD
	UNITS		
SULFIDE	ug/L	92.6	NC

*** DENOTES VALUE NOT WITHIN QA/QC ADVISORY LIMITS**

NC DENOTES THAT BOTH SAMPLES ARE NON-DETECT AND A RPD CANNOT BE CALCULATED.

CORRESPONDING SDG'S AND ASSOCIATED SAMPLES

R8548: GPTH02-1, GPTH02-2, GPTH02-3, GPTH02-4, GPTH02-1D

COMPOUND	ADVISORY LIMITS		RPD
	%R WATER		WATER
SULFIDE	75%-125%		+/-20

2.1 Water Matrix

No target compounds requiring RPD calculation were detected in either the water samples or associated duplicates for the volatiles, semivolatiles, polynuclear aromatic hydrocarbons, pesticides/PCB/kepone, organophosphorous pesticides, herbicides, cyanide, and sulfide (Tables 2-1 & 2-2). Therefore, no precision assessment based on field duplicate results was conducted for those parameters.

The dioxin/furan analysis of the field duplicate pair of sample GPTHO2-1 exhibited a non-compliant RPD for the one (1) congener detected (Table 2-1). The non-compliant congener was OCDD. An OCDD concentration was detected in the original sample, but was not detected in the duplicate sample. The non-compliance for the congener OCDD can be attributed to poor analytical and/or sampling precision. The reported positive result for OCDD in sample GPTH02-1 was appropriately qualified as estimated, J.

Two (2) of the thirteen (13) target analytes detected in the metals analysis of the field duplicate pair of sample GPTHO2-1 exhibited non-compliant RPDs (Table 2-2). The target analytes with non-compliant RPDs were beryllium and selenium. The non-compliance for the analytes beryllium and selenium can be attributed to the low concentrations detected. Results were less than the CRDL in both of the samples. Assessment of the non-compliant analytes for serial dilution criteria indicates that they were in-control (Appendix B).

The evaluation of precision of the water matrix for the MS/MSD samples is provided in Tables 2-3 through 2-12. All MS/MSD sample pairs analyzed for semivolatiles, polynuclear aromatic hydrocarbons, pesticides/PCBs, organophosphorous pesticides, herbicides, metals, cyanide, and sulfide exhibited acceptable RPDs between spike compounds (Tables 2-5 through 2-12).

The volatile analysis of the MS/MSD pair of sample GPTH02-1 exhibited a non-compliant RPDs for one (1) of the five (5) spike compounds (Table 2-3, page 2-8). The non-compliance for the compound toluene was slight and resulted from a disparity in the recoveries between the MS and the MSD. However, the recoveries were within QC limits. The analytical data did not require qualification.

The dioxin/furan analysis of the MS/MSD pair of sample GPTH02-1 exhibited a non-compliant RPD for one congener, 2,3,7,8-TCDD (Table 2-4, page 2-9). The non-compliance resulted from a disparity in the recoveries between the MS and the MSD. However, the recoveries for the congener were within reasonable limits. The analytical data did not require qualification.

Based on assessment of duplicate precision evaluation criteria, the water matrix analytical data was acceptable for each SDG with the noted potential for bias in the dioxin/furan congener OCDD in one sample.

3.0 ACCURACY

The assessment of accuracy is evaluated by comparison of the percent recovery (%R) computed from the known concentration of analyte spikes and their recovered concentration versus the analytical method acceptance criteria. Spike recoveries provide an indication of bias, where the reported data may either overestimate or underestimate the actual concentration of detected compounds and/or the detection limits. Recoveries outside acceptable criteria may be caused by factors such as matrix interference, poor analytical precision, or instrument calibration.

The following Sections summarize the evaluation of analytical accuracy for the water matrix for the following analytical groups:

- GC/MS volatile organic compounds (GC/MS VOCs);
- dioxin/furan compounds (D/Fs);
- semivolatile organic compounds (SVOCs);
- polynuclear aromatic hydrocarbons (PAHs);
- pesticides, PCBs, (P/Ps);
- organophosphorous pesticides (OPPs);
- herbicides; and
- inorganics, cyanide, & sulfide.

Accuracy was assessed using MS and MSD samples for organic analyses and MS samples for inorganic analyses for each matrix, as well as surrogate compound recoveries for those analytical fraction which utilize them. Accuracy for the dioxin/furan fraction was assessed using the recovery of internal standards. The results of the evaluation of accuracy for the MS/MSD samples is provided in Tables 2-3 through 2-12 for water matrix. The results of the evaluation of accuracy for the surrogates in the samples are provided in Table 3-1 through 3-8 for the water matrix.

3.1 Water Matrix

All MS/MSD sample pairs analyzed for volatiles, pesticides/PCBs, organophosphorous pesticides, herbicides, cyanide, and sulfide exhibited acceptable recoveries of spike compounds (Tables 2-3, 2-7, 2-8, 2-9, 2-11 and 2-12).

The surrogate recoveries for volatiles, pesticide/PCBs, kepone, and herbicides were acceptable (Tables 3-1, 3-5, 3-6, and 3-8).

The MS/MSD pair analyzed for the dioxin/furan fraction exhibited one (1) congener with a non-compliant recovery (Table 2-4, page 2-9). The non-compliant congener was OCDF. The recovery was above reasonable QC limits. However, there were no positive results reported in the samples for this congener. The analytical data did not require qualification.

The internal standards (IS) for the dioxin/furan fraction were above or below the QC limits in thirty-one percent (31%) of the recoveries. Qualification of the analytical data was required for only four (4) field samples. The reported result for 1,2,3,7,8-HpCDD in samples GPTHO2-2 and GPTHO2-3 were appropriately qualified as estimated, J, and should be considered potentially overestimated. The reported result for OCDD in samples GPTHO2-1 and GPTHO2-4 were appropriately qualified as estimated, J, and should be considered potentially overestimated.

The MS/MSD of sample GPTHO2-1 analyzed for semivolatile organics had non-compliant %Rs for one (1) of the eleven (11) spike compounds (Table 2-5, page 2-10). The non-compliant recoveries

TABLE 3 - 1

SURROGATE % RECOVERIES
GC/MS VOLATILE WATER SAMPLES
NCBC GULFPORT HO

SDG	SAMPLE ID	SMC1	SMC2	SMC3	TOTAL OUT
R8548	BS-01-RI2	99	96	90	0
	BS-02-TB2	99	95	96	0
	GPTH02-1	99	95	94	0
	GPTH02-1D	98	97	98	0
	GPTH02-2	99	96	97	0
	GPTH02-3	98	95	97	0
	GPTH02-4	95	94	90	0
	GPTH02-1MS	97	99	92	0
	GPTH02-1MSD	103	100	94	0
R8520	BS-01-DI2	97	98	98	0
	BS-01-PI2	89	97	99	0
	BS-01-TB2	96	97	100	0

SMC1 = TOLUENE-D8 QC LIMITS 88% - 110%
SMC2 = BROMOFLUOROBENZENE QC LIMITS 86% - 115%
SMC3 = 1,2-DICHLOROETHANE-D4 QC LIMITS 76% - 114%

# SAMPLES	% REC IN	%REC OUT	% TOTAL IN
12	36	0	100.0%

TABLE 3 - 2

WATER SAMPLE INTERNAL STANDARDS % RECOVERIES
DIOXIN/FURAN
NCBC GULFPORT HO

	BS-01-RI2	GPTH02-1	GPTH02-1D	GPTH02-2	GPTH02-3	GPTH02-4	GPTH02-1MS	GPTH02-1MSD	BS-01R-RI
I.S. COMPOUND									
13C-2378-TCDD	121	115	127	120	128	122	*49.0	109	42.7
13C-2378-TCDF	118	100	121	106	112	109	69.7	91	54.3
13C-12378-PeCDD	112	89	111	112	107	110	*31.8	96.7	47.1
13C-12378-PeCDF	126	104	132	117	116	120	*8.6	98.9	36.7 *
13C-23478-PeCDF	121	107	132	121	117	121	*28.8	108	51.3
13C-123478-HxCDD	*161	128	*188	*154	*152	*150	*156	*151	53
13C-123678-HxCDD	106	102	113	112	102	111	104	115	78.4
13C-123478-HxCDF	130	120	134	*151	114	134	*236	134	82.3
13C-123678-HxCDF	124	108	109	129	115	120	*169	116	139
13C-234678-HxCDF	125	96.3	129	*138	125	129	114	126	75.2
13C-123789-HXCDF	147	*137	*150	*166	*145	*150	*264	141	83.1
13C-1234678-HpCDD	145	96.9	124	*149	125	131	*1330	117	92.3
13C-1234678-HpCDF	137	96.1	123	*140	120	124	*927	112	92.7
13C-1234789-HpCDF	*196	*144	*186	*195	*160	*173	*1874	*153	67.9
13C-OCDD	*59.3	*21.6	*44.8	*57.4	*54.4	*37.2	*709	*44.7	71.9
TOTAL OUT	3	3	4	8	4	4	12	3	1

QC LIMITS: 60% - 135%
* - VALUE OUTSIDE OF QC LIMITS

# SAMPL	% REC IN	% REC OUT	% TOTAL IN
9	93	42	68.9%

TABLE 3 - 3

SURROGATE % RECOVERIES
SEMIVOLATILE WATER SAMPLES
NCBC GULFPORT HO

SDG	SAMPLE ID	S1	S2	S3	S4	S5	S6	TOTAL OUT
R8548	BS-01-RI2	72	74	85	68	74	60	0
	GPTH02-1	74	77	30*	73	74	67	1
	GPTH02-1D	72	74	30*	71	75	65	1
	GPTH02-1DRE	81	81	55	88	91	86	0
	GPTH02-1RE	79	80	53	91	93	84	0
	GPTH02-2	70	74	48	76	76	70	0
	GPTH02-3	92	72	34	74	74	70	0
	GPTH02-4	70	73	53	76	74	69	0
	GPTH02-1MS	70	73	31*	79	78	75	1
	GPTH02-1MSD	70	72	23*	87	86	81	1
	GPTH02-1MSDRE	70	84	40	*95	92	90	1
	GPTH02-1MSRE	82	73	58	90	84	79	0
R8520	BS-01-DI2	80	77	88	70	68	70	0
	BS-01-PI2	79	74	89	4*	38	48	1
	BS-01-PI2RE	81	77	91	5*	38	57	1

S1 = NITROBENZENE-D5 QC LIMITS = 35% - 114%
S2 = 2-FLUOROBIPHENYL QC LIMITS = 43% - 116%
S3 = TERPHENYL-D14 QC LIMITS = 33% - 141%
S4 = PHENOL D-5 QC LIMITS = 10% - 94%
S5 = 2-FLUOROPHENOL QC LIMITS = 21% - 100%
S6 = 2,4,6-TRIBROMOPHENOL QC LIMITS = 10% - 123%

# SAMPLES	% REC IN	%REC OUT	% TOTAL IN
15	83	7	92.2%

TABLE 3 - 4

SURROGATE % RECOVERIES
POLYNUCLEAR AROMATIC HYDROCARBONS WATER SAMPLES
NCBC GULFPORT HO

SDG	SAMPLE ID	TD-14	TOTAL OUT
R8548	BS-01-RI2	28*	1
	BS-01-RI2RE	32	0
	GPTH02-1	53	0
	GPTH02-1RE	52	0
	GPTH02-1D	72	0
	GPTH02-2	64	0
	GPTH02-3	56	0
	GPTH02-4	84	0
	GPTH02-1MS	36	0
	GPTH02-1MSD	48	0
	GPTH02-1MSRE	51	0
	GPTH02-1MSDRE	59	0
R8520	BS-01-DI2	81	0
	BS-01-DI2	67	0
	BS-01-PI2	65	0
	BS-01-PI2RE	39	0

TERPHENYL-d14 QC LIMITS NOT PROVIDED

* - INDICATES RECOVERY IS OUTSIDE CONTROL LIMITS.

# SAMPL	% REC IN	%REC OUT	% TOTAL IN
16	15	1	93.8%

TABLE 3 - 5

SURROGATE % RECOVERIES
PESTICIDES/PCB WATER SAMPLES
NCBC GULFPORT HO

SDG	SAMPLE ID	TCX	DCB	TOTAL OUT
R8548	BS-01-RI2	78	38	0
	GPTH02-1	79	20	0
	GPTH02-1D	77	21	0
	GPTH02-2	74	23	0
	GPTH02-3	57	19	0
	GPTH02-4	73	22	0
	GPTH02-1MS	80	22	0
	GPTH02-1MSD	80	20	0
R8520	BS-01-DI2	73	27	0
	BS-01-PI2	79	79	0

TCX = TETRACHLORO-M-XYLENE QC LIMITS = 47% - 101%
DCB = DECACHLOROBIPHENYL QC LIMITS = 0% - 113%

# SAMPLES	% REC IN	%REC OUT	% TOTAL IN
10	20	0	100.0%

TABLE 3 - 6

SURROGATE % RECOVERIES
KEPONE WATER SAMPLES
NCBC GULFPORT HO

SDG	SAMPLE ID	TCX	DCB	TOTAL OUT
R8548	BS-01-RI2	63	26	0
	GPTH02-1	80	18	0
	GPTH02-1D	75	15	0
	GPTH02-2	65	18	0
	GPTH02-3	80	12	0
	GPTH02-4	60	17	0
R8520	BS-01-DI2	85	21	0
	BS-01-PI2	83	28	0

TCX = TETRACHLORO-M-XYLENE QC LIMITS = 26% - 126%
DCB = DECACHLOROBIPHENYL QC LIMITS = 7% - 137%

# SAMPLES	% REC IN	%REC OUT	% TOTAL IN
8	16	0	100.0%

TABLE 3 - 7

SURROGATE % RECOVERIES
ORGANOPHOSPHOROUS PESTICIDES WATER SAMPLES
NCBC GULFPORT HO

SDG	SAMPLE ID	ASPON	TOTAL OUT
R8548	BS-01-RI2	74	0
	GPTH02-1	65	0
	GPTH02-1D	56	0
	GPTH02-2	73	0
	GPTH02-3	60	0
	GPTH02-4	68	0
	GPTH02-1MS	75	0
	GPTH02-1MSD	68	0
R8520	BS-01-DI2	71	0
	BS-01-PI2	28*	1
	BS-01-PI2RE	66	0

ASPON QC LIMITS = 38% - 131%

# SAMPLES	% REC IN	%REC OUT	% TOTAL IN
11	10	1	90.9%

TABLE 3 - 8

SURROGATE % RECOVERIES
CHLORINATED HERBICIDES WATER SAMPLES
NCBC GULFPORT

SDG	SAMPLE ID	DCBA	DCPA	TOTAL OUT
R8548	BS-01-RI2	79	79	0
	GPTH02-1	81	82	0
	GPTH02-1D	78	80	0
	GPTH02-2	80	81	0
	GPTH02-2DL	97	93	0
	GPTH02-3	84	89	0
	GPTH02-4	81	81	0
	GPTH02-1MS	88	89	0
	GPTH02-1MSD	86	86	0
R8520	BS-01-DI2	93	93	0
	BS-01-PI2	96	101	0

DCBA - 3,5-DICHLOROBENZOIC ACID QC LIMITS = 41% - 124%
DCPA - 2,4-DICHLOROPHENYLACETIC ACID QC LIMITS = 50% - 122%

# SAMPLES	% REC IN	%REC OUT	% TOTAL IN
11	22	0	100.0%

for the compound 4-nitrophenol were slightly above the QC limits. The laboratory re-extracted and analyzed the MS/MSD pair, with similar results. There were no positive results reported in the samples for the compound 4-nitrophenol. The analytical data did not require qualification.

Four (4) semivolatile samples exhibited non-compliant recovery of one surrogate compound, terphenyl-D14 (Table 3-3). The analytical data did not require qualification because the functional guidelines allows one recovery per fraction to exceed QC limits as long as the recovery is above 10%. The surrogate compound phenol-d_6 was recovered less than 10% in samples BS-01-PI2 and BS-01-PI2RE. This indicates that positive results for the acid fraction in these two (2) samples may be underestimated and that non-detect results are unreliable. All positive results for acid fraction compounds in samples BS-01-PI and BS-01-PIRE were appropriately qualified as estimated, J, and non-detect results for acid fraction compounds were rejected, R. Sample BS-01-PIRE was rejected in favor of the original analysis, so those data points were not considered in the total. This constituted a rejection of twenty-five (25) data points in the QC blank sample. The completion goal was still met.

The PAH analysis of the MS/MSD pair of sample GPTH02-1 exhibited non-compliant recoveries for twelve (12) compounds in the MS and five (5) compounds in the MSD. All non-compliant recoveries were below the QC limits. The compounds which were non-compliant in both the MS and the MSD were appropriately qualified as estimated, UJ, in the original sample GPTH02-1.

The PAH surrogate recovery for one (1) field QC blank was below the acceptable minimum for accuracy. This indicates that reported positive and non-detect results for target compounds in the sample may be underestimated. The reported results in sample BS-01-RI2 were appropriately qualified as estimated, J/UJ.

The organophosphorous pesticide surrogate recovery for one (1) field QC sample, BS-01-PI, was below the acceptable minimum criteria for accuracy (Table 3-7). This indicates that reported positive and non-detect results for target compounds in the sample may be underestimated. The reported results in sample BS-01-PI2 were appropriately qualified as estimated, J/UJ.

The MS/MD analyzed for inorganic analytes exhibited one (1) compound with a non-compliant %Rs (Table 2-10). The non-compliant target analyte was selenium. The %Rs was below the minimum criteria for accuracy, which indicates that the quantified values for selenium in associated samples may be underestimated. Positive and non-detect results for selenium were appropriately qualified as estimated, J/UJ.

Based on assessment of MS/MSD and surrogate sample accuracy evaluation criteria, the water matrix analytical data was acceptable for each SDG with the exception of the semivolatile fraction. Some of the analytical results may be overestimated or underestimated. For the semivolatile fraction, twenty-five (25) data points in a field QC blank were rejected, R, due to surrogate %R below 10%.

4.0 REPRESENTATIVENESS

Representativeness of the environmental sample analytical data was assessed using trip blanks, field blanks, equipment rinseate blanks, and laboratory method blanks. The environmental samples and associated blanks were analyzed for the following target analyte groups:

- GC/MS volatile organic compounds (GC/MS VOCs);
- dioxin/furan compounds (D/Fs);
- semivolatile organic compounds (SVOCs);
- polynuclear aromatic hydrocarbons (PAHs);
- pesticides, PCBs, (P/Ps);
- organophosphorous pesticides (OPPs);
- herbicides; and
- inorganics, cyanide, & sulfide.

The trip blank samples were analyzed for only GC/MS volatile organic target analytes. Field blanks, equipment rinseate blanks, and laboratory method blanks were analyzed for target analytes in each listed category. The assessment of representativeness is summarized in tabular form for each type of blank; trip blank results are summarized in Table 4-1, field blank results are summarized in Tables 4-2 through 4-12, equipment rinseate blank results are summarized in Tables 4-13 through 4-23, and method blank results are summarized in Tables 4-24 through 4-32.

If contaminants were detected in a blank, corrective actions were made for the chemical analytical data during data validation by Heartland. The corrective action consisted of amending the laboratory reported results for organic and inorganic target analytes by the criteria. The following describes the Validation Qualifier code in the blank summary tables.

Organic Target Analytes

- CRDL Validation Qualifier. If a sample result for the blank contaminant was less than the CRQL and less than 5 times the blank value (10 times for common laboratory contaminants), the sample result was rejected and amended as estimated non-detected at the CRQL for the target compound.

- U Validation Qualifier. If a sample result for the blank contaminant was greater than the sample CRQL and less than 5 times the blank value (10 times for common laboratory contaminants), the sample result for the blank contaminant was amended as non detect at the concentration reported in the sample results.

- No Action (NA). If a sample result for the blank contaminant was greater than the CRQL and 5 time the blank value (10 times for common laboratory contaminants), the result was not amended.

Inorganic Target Analytes

- U Validation Qualifier. If a sample result for the blank contaminant was less than the IDL and less than 5 times the blank value, the sample result was amended as non-detected.

- UJ Validation Qualifier. If a sample result for the blank contaminant was less than the sample IDL when the absolute value of the negative blank value was greater

TABLE 4 - 1

GC/MS VOLATILE COMPOUNDS DETECTED IN TRIP BLANKS
NCBC GULFPORT HO

SDG NUMBER	BLANK ID	RELATED ENVIRONMENTAL SAMPLES	CONTAMINANT	TB CONC.	UNITS	VALIDATION QUALIFIER
R8520	BS-01-TB2	BS-01-PI2, BS-01-DI2	ACETONE	10	ug/L	U
R8548	BS-02-TB2	GPTH02-1, GPTH02-1D, GPTH02-2, GPTH02-3, GPTH02-4, GPTH02-1MS, GPTH02-1MSD	NO CONTAMINATION FOUND			

TABLE 4 - 2

GC/MS VOLATILES DETECTED IN FIELD BLANKS
NCBC GULFPORT HO

SDG NUMBER	BLANK ID	RELATED ENVIRONMENTAL SAMPLES	CONTAMINANT	FB CONC.	UNITS	VALIDATION QUALIFIER
R8520	BS-01-DI2	GPTH02-1, GPTH02-1D, GPTH02-2, GPTH02-4, GPTH02-1MS, GPTH02-1MSD	CARBON DISULFIDE	14	ug/L	CRQL
		GPTH02-3	CARBON DISULFIDE	14	ug/L	
R8520	BS-01-PI2	GPTH02-1, GPTH02-1D, GPTH02-2, GPTH02-4, GPTH02-1MS, GPTH02-1MSD	CARBON DISULFIDE	5	ug/L	CRQL
		GPTH02-3	CARBON DISULFIDE	5	ug/L	

TABLE 4 - 3

DIOXIN FURANS DETECTED IN FIELD BLANKS
NCBC GULFPORT HO

THIS TABLE WAS LEFT INTENTIONALLY BLANK.

TABLE 4 - 4

SEMIVOLATILES DETECTED IN FIELD BLANKS
NCBC GULFPORT HO

SDG NUMBER	BLANK ID	RELATED ENVIRONMENTAL SAMPLES	CONTAMINANT	FB CONC.	UNITS	VALIDATION QUALIFIER
R8520	BS-01-DI2	GPTH02-1, GPTH02-1D, GPTH02-2, GPTH02-4, GPTH02-3, GPTH02-1MS, GPTH02-1MSD	NO CONTAMINATION FOUND			
R8520	BS-01-PI2	GPTH02-1, GPTH02-1D, GPTH02-2, GPTH02-4, GPTH02-3, GPTH02-1MS, GPTH02-1MSD	NO CONTAMINATION FOUND			

TABLE 4 - 5

POLYNUCLEAR AROMATIC HYDROCARBONS DETECTED IN FIELD BLANKS
NCBC GULFPORT HO

SDG NUMBER	BLANK ID	RELATED ENVIRONMENTAL SAMPLES	CONTAMINANT	FB CONC.	UNITS	VALIDATION QUALIFIER
R8520	BS-01-DI2	GPTH02-1, GPTH02-1D, GPTH02-2, GPTH02-4, GPTH02-3, GPTH02-1MS, GPTH02-1MSD	NO CONTAMINATION FOUND			
R8520	BS-01-PI2	GPTH02-1, GPTH02-1D, GPTH02-2, GPTH02-4, GPTH02-3, GPTH02-1MS, GPTH02-1MSD	NO CONTAMINATION FOUND			

TABLE 4 - 6

PESTICIDES/AROCLORS DETECTED IN FIELD BLANKS
NCBC GULFPORT HO

SDG NUMBER	BLANK ID	RELATED ENVIRONMENTAL SAMPLES	CONTAMINANT	FB CONC.	UNITS	VALIDATION QUALIFIER
R8520	BS-01-DI2	GPTH02-1, GPTH02-1D, GPTH02-2, GPTH02-4, GPTH02-3, GPTH02-1MS, GPTH02-1MSD	NO CONTAMINATION FOUND			
R8520	BS-01-PI2	GPTH02-1, GPTH02-1D, GPTH02-2, GPTH02-4, GPTH02-3, GPTH02-1MS, GPTH02-1MSD	NO CONTAMINATION FOUND			

TABLE 4 - 7

KEPONE DETECTED IN FIELD BLANKS
NCBC GULFPORT HO

SDG NUMBER	BLANK ID	RELATED ENVIRONMENTAL SAMPLES	CONTAMINANT	FB CONC.	UNITS	VALIDATION QUALIFIER
R8520	BS-01-DI2	GPTH02-1, GPTH02-1D, GPTH02-2, GPTH02-4, GPTH02-3	NO CONTAMINATION FOUND			
R8520	BS-01-PI2	GPTH02-1, GPTH02-1D, GPTH02-2, GPTH02-4, GPTH02-3	NO CONTAMINATION FOUND			

TABLE 4 - 8

ORGANOPHOSPHOROUS PESTICIDES DETECTED IN FIELD BLANKS
NCBC GULFPORT HO

SDG NUMBER	BLANK ID	RELATED ENVIRONMENTAL SAMPLES	CONTAMINANT	FB CONC.	UNITS	VALIDATION QUALIFIER
R8520	BS-01-DI2	GPTH02-1, GPTH02-1D, GPTH02-2, GPTH02-4, GPTH02-3, GPTH02-1MS, GPTH02-1MSD	NO CONTAMINATION FOUND			
R8520	BS-01-PI2	GPTH02-1, GPTH02-1D, GPTH02-2, GPTH02-4, GPTH02-3, GPTH02-1MS, GPTH02-1MSD	NO CONTAMINATION FOUND			

TABLE 4 - 9

CHLORINATED HERBICIDES DETECTED IN FIELD BLANKS
NCBC GULFPORT HO

SDG NUMBER	BLANK ID	RELATED ENVIRONMENTAL SAMPLES	CONTAMINANT	FB CONC.	UNITS	VALIDATION QUALIFIER
R8520	BS-01-DI2	GPTH02-1, GPTH02-1D, GPTH02-2, GPTH02-4, GPTH02-3, GPTH02-2DL GPTH02-1MSD, GPTH02-1MS	NO CONTAMINATION FOUND			
R8520	BS-01-PI2	GPTH02-1, GPTH02-1D, GPTH02-2, GPTH02-4, GPTH02-3, GPTH02-2DL GPTH02-1MSD, GPTH02-1MS	NO CONTAMINATION FOUND			

TABLE 4 - 10

METALS DETECTED IN FIELD BLANKS
NCBC GULFPORT HO

SDG NUMBER	BLANK ID	RELATED ENVIRONMENTAL SAMPLES	CONTAMINANT	FB CONC.	UNITS	VALIDATION QUALIFIER
R8520	BS-01-DI2	GPTH02-1, GPTH02-1D, GPTH02-2, GPTH02-4, GPTH02-3, GPTH02-1MS, GPTH02-1MD	NO CONTAMINATION FOUND			
R8520	BS-01-PI2	GPTH02-02, GPTH02-1, GPTH02-1D GPTH02-3, GPTH02-4, GPTH02-1MS GPTH02-1MD	COPPER	2.2	ug/L	

Positive results noted in field blanks for calcium, iron, magnesium, manganese, and sodium. These analytes were not target compounds for the field samples, so they were not included in the table.

TABLE 4 - 11

CYANIDE DETECTED IN FIELD BLANKS
NCBC GULFPORT HO

SDG NUMBER	BLANK ID	RELATED ENVIRONMENTAL SAMPLES	CONTAMINANT	FB CONC.	UNITS	VALIDATION QUALIFIER
R8520	BS-01-DI2	GPTH02-1, GPTH02-1D, GPTH02-2, GPTH02-4, GPTH02-3, GPTH02-1MS, GPTH02-1MD	NO CONTAMINATION FOUND			
R8520	BS-01-PI2	GPTH02-1, GPTH02-1D, GPTH02-2, GPTH02-4, GPTH02-3, GPTH02-1MS, GPTH02-1MD	NO CONTAMINATION FOUND			

TABLE 4 - 12

SULFIDE DETECTED IN FIELD BLANKS
NCBC GULFPORT HO

SDG NUMBER	BLANK ID	RELATED ENVIRONMENTAL SAMPLES	CONTAMINANT	FB CONC.	UNITS	VALIDATION QUALIFIER
R8520	BS-01-DI2	GPTH02-1, GPTH02-1D, GPTH02-2, GPTH02-4, GPTH02-3, GPTH02-1MS, GPTH02-1MD	NO CONTAMINATION FOUND			
R8520	BS-01-PI2	GPTH02-1, GPTH02-1D, GPTH02-2, GPTH02-4, GPTH02-3, GPTH02-1MS, GPTH02-1MD	NO CONTAMINATION FOUND			

TABLE 4 - 13

GC/MS VOLATILES DETECTED IN EQUIPMENT RINSEATE BLANKS
NCBC GULFPORT HO

SDG NUMBER	BLANK ID	RELATED ENVIRONMENTAL SAMPLES	CONTAMINANT	RB CONC.	UNITS	VALIDATION QUALIFIER
R8548	BS-01-RI2	GPTH02-1, GPTH02-1D, GPTH02-2, GPTH02-4, GPTH02-3, GPTH02-1MS, GPTH02-1MSD	NO CONTAMINATION FOUND			

TABLE 4 - 14

DIOXIN/FURANS DETECTED IN EQUIPMENT RINSEATE BLANKS
NCBC GULFPORT HO

SDG NUMBER	BLANK ID	RELATED ENVIRONMENTAL SAMPLES	CONTAMINANT	RB CONC.	UNITS	VALIDATION QUALIFIER
R8548	BS-01-RI2	GPTH02-1, GPTH02-1D, GPTH02-2, GPTH02-4, GPTH02-3, GPTH02-1MS, GPTH02-1MSD	NO CONTAMINATION FOUND			

TABLE 4 - 15

SEMIVOLATILES DETECTED IN EQUIPMENT RINSEATE BLANKS
NCBC GULFPORT HO

SDG NUMBER	BLANK ID	RELATED ENVIRONMENTAL SAMPLES	CONTAMINANT	RB CONC.	UNITS	VALIDATION QUALIFIER
R8548	BS-01-RI2	GPTH02-1, GPTH02-1D, GPTH02-2, GPTH02-4, GPTH02-3, GPTH02-1MS, GPTH02-1MSD	NO CONTAMINATION FOUND			

TABLE 4 - 16

POLYNUCLEAR AROMATIC HYDROCARBONS DETECTED IN EQUIPMENT RINSEATE BLANKS
NCBC GULFPORT HO

SDG NUMBER	BLANK ID	RELATED ENVIRONMENTAL SAMPLES	CONTAMINANT	RB CONC.	UNITS	VALIDATION QUALIFIER
R8548	BS-01-RI2	GPTH02-1, GPTH02-1D, GPTH02-2, GPTH02-4, GPTH02-3, GPTH02-1MS, GPTH02-1MSD	NO CONTAMINATION FOUND			

TABLE 4 - 17

PESTICIDES/AROCLORS DETECTED IN EQUIPMENT RINSEATE BLANKS
NCBC GULFPORT HO

SDG NUMBER	BLANK ID	RELATED ENVIRONMENTAL SAMPLES	CONTAMINANT	RB CONC.	UNITS	VALIDATION QUALIFIER
R8548	BS-01-RI2	GPTH02-1, GPTH02-1D, GPTH02-2, GPTH02-4, GPTH02-3, GPTH02-1MS, GPTH02-1MSD	NO CONTAMINATION FOUND			

TABLE 4 - 18

KEPONE DETECTED IN EQUIPMENT RINSEATE BLANKS
NCBC GULFPORT HO

SDG NUMBER	BLANK ID	RELATED ENVIRONMENTAL SAMPLES	CONTAMINANT	RB CONC.	UNITS	VALIDATION QUALIFIER
R8548	BS-01-RI2	GPTH02-1, GPTH02-1D, GPTH02-2, GPTH02-4, GPTH02-3	NO CONTAMINATION FOUND			

TABLE 4 - 19

ORGANOPHOSPHOROUS PESTICIDES DETECTED IN EQUIPMENT RINSEATE BLANKS
NCBC GULFPORT HO

SDG NUMBER	BLANK ID	RELATED ENVIRONMENTAL SAMPLES	CONTAMINANT	RB CONC.	UNITS	VALIDATION QUALIFIER
R8548	BS-01-RI2	GPTH02-1, GPTH02-1D, GPTH02-2, GPTH02-4, GPTH02-3, GPTH02-1MS, GPTH02-1MSD	NO CONTAMINATION FOUND			

TABLE 4 - 20

CHLORINATED HERBICIDES DETECTED IN EQUIPMENT RINSEATE BLANKS
NCBC GULFPORT HO

SDG NUMBER	BLANK ID	RELATED ENVIRONMENTAL SAMPLES	CONTAMINANT	RB CONC.	UNITS	VALIDATION QUALIFIER
R8548	BS-01-RI2	GPTH02-1, GPTH02-1D, GPTH02-2, GPTH02-4, GPTH02-3, GPTH02-2DL, GPTH02-1MS, GPTH02-1MSD	NO CONTAMINATION FOUND			

TABLE 4 - 21

METALS DETECTED IN EQUIPMENT RINSEATE BLANKS
NCBC GULFPORT HO

SDG NUMBER	BLANK ID	RELATED ENVIRONMENTAL SAMPLES	CONTAMINANT	RB CONC.	UNITS	VALIDATION QUALIFIER
R8548	BS-01-RI2	GPTH02-1, GPTH02-1D, GPTH02-2, GPTH02-4, GPTH02-3, GPTH02-1MS, GPTH02-1MD	COPPER	1.5	ug/L	

TABLE 4 - 22

CYANIDE DETECTED IN EQUIPMENT RINSEATE BLANKS
NCBC GULFPORT HO

SDG NUMBER	BLANK ID	RELATED ENVIRONMENTAL SAMPLES	CONTAMINANT	RB CONC.	UNITS	VALIDATION QUALIFIER
R8548	BS-01-RI2	GPTH02-1, GPTH02-1D, GPTH02-2, GPTH02-4, GPTH02-3, GPTH02-1MS, GPTH02-1MD	NO CONTAMINATION FOUND			

TABLE 4 - 23

SULFIDE DETECTED IN EQUIPMENT RINSEATE BLANKS
NCBC GULFPORT HO

SDG NUMBER	BLANK ID	RELATED ENVIRONMENTAL SAMPLES	CONTAMINANT	RB CONC.	UNITS	VALIDATION QUALIFIER
R8548	BS-01-RI2	GPTH02-1, GPTH02-1D, GPTH02-2, GPTH02-4, GPTH02-3, GPTH02-1MS, GPTH02-1MD	NO CONTAMINATION FOUND			

TABLE 4 - 24

GC/MS VOLATILES DETECTED IN METHOD BLANKS
NCBC GULFPORT HO

SDG NUMBER	BLANK ID	RELATED ENVIRONMENTAL SAMPLES	CONTAMINANT	MB CONC.	UNITS	VALIDATION QUALIFIER
R8520	V0817W02-BLK	BS-01-DI2, BS-01-PI2, BS-01-TB2	NO CONTAMINATION FOUND			
R8548	V0818W01-BLK	BS-01-RI2	NO CONTAMINATION FOUND			
	V0823W01-BLK	BS-02-TB2, GPTH02-1, GPTH02-1D, GPTH02-2, GPTH02-3, GPTH02-4, GPTH02-1MS	NO CONTAMINATION FOUND			
	V0824W01-BLK	GPTH02-1MSD	NO CONTAMINATION FOUND			

TABLE 4 - 25

DIOXIN/FURANS DETECTED IN METHOD BLANKS
NCBC GULFPORT HO

SDG NUMBER	BLANK ID	RELATED ENVIRONMENTAL SAMPLES	CONTAMINANT	MB CONC.	UNITS	VALIDATION QUALIFIER
R8548	K745_0006	BS-01-RI2, GPTH02-1D, GPTH02-2, GPTH02-3, GPTH02-4, GPTH02-1, GPTH02-1MS, GPTH02-1MSD	NO CONTAMINATION FOUND			

TABLE 4 - 26

SEMIVOLATILES DETECTED IN METHOD BLANKS
NCBC GULFPORT HO

SDG NUMBER	BLANK ID	RELATED ENVIRONMENTAL SAMPLES	CONTAMINANT	MB CONC.	UNITS	VALIDATION QUALIFIER
R8520	B0815WB1-BLK	BS-01-DI2, BS-01-PI2	NO CONTAMINATION FOUND			
	B0909WA1-BLK	BS-01-PI2RE	NO CONTAMINATION FOUND			
R8548	B0819WA1-BLK	BS-01-RI2, GPTH02-1, GPTH02-1D, GPTH02-2, GPTH02-3, GPTH02-4, GPTH02-1MS, GPTH02-1MSD	NO CONTAMINATION FOUND			
	B0826WA1-BLK	GPTH02-1DRE, GPTH02-1RE, GPTH02-1MSDRE, GPTH02-1MSRE	NO CONTAMINATION FOUND			

TABLE 4 - 27

POLYNUCLEAR AROMATIC HYDROCARBONS DETECTED IN METHOD BLANKS
NCBC GULFPORT HO

SDG NUMBER	BLANK ID	RELATED ENVIRONMENTAL SAMPLES	CONTAMINANT	MB CONC.	UNITS	VALIDATION QUALIFIER
R8520	NWB10815	BS-01-DI2, BS-01-PI2	ANTHRACENE	0.21	ug/L	U
	NWB10912	BS-01-PI2RE, BS-01-DI2RE	NO CONTAMINATION FOUND			
R8548	NWB10817	BS-01-RI2, GPTH02-1, GPTH02-1D, GPTH02-2, GPTH02-3, GPTH02-4, GPTH02-1MS, GPTH02-1MSD	NO CONTAMINATION FOUND			
	NWB10908	BS-01-RI2RE	NO CONTAMINATION FOUND			
	NWB10915	GPTH02-1RE, GPTH02-1MSDRE, GPTH02-1MSRE	NO CONTAMINATION FOUND			
	NWB20915	GPTH02-1RE, GPTH02-1MSDRE, GPTH02-1MSRE	NO CONTAMINATION FOUND			

TABLE 4 - 28

PESTICIDE/PCBS DETECTED IN METHOD BLANKS
NCBC GULFPORT HO

SDG NUMBER	BLANK ID	RELATED ENVIRONMENTAL SAMPLES	CONTAMINANT	MB CONC.	UNITS	VALIDATION QUALIFIER
R8520	9WB10813	BS-01-DI2, BS-01-PI2	NO CONTAMINATION FOUND			
R8548	9WB10818	GPTHO2-1, GPTHO2-1D, GPTHO2-2, GPTHO2-3, GPTHO2-4, GPTH02-1MS, GPTHO2-1MSD, BS-01-RI2	NO CONTAMINATION FOUND			

TABLE 4 - 29

KEPONE DETECTED IN METHOD BLANKS
NCBC GULFPORT HO

SDG NUMBER	BLANK ID	RELATED ENVIRONMENTAL SAMPLES	CONTAMINANT	MB CONC.	UNITS	VALIDATION QUALIFIER
R8520	9WB10813	BS-01-DI2, BS-01-PI2	NO CONTAMINATION FOUND			
R8548	9WB10818	GPTHO2-1, GPTHO2-1D, GPTHO2-2, GPTHO2-3, GPTHO2-4, GPTH02-1MS, GPTHO2-1MSD, BS-01-RI2	NO CONTAMINATION FOUND			

TABLE 4 - 30

ORGANOPHOSPHOROUS PESTICIDES DETECTED IN METHOD BLANKS
NCBC GULFPORT HO

SDG NUMBER	BLANK ID	RELATED ENVIRONMENTAL SAMPLES	CONTAMINANT	MB CONC.	UNITS	VALIDATION QUALIFIER
R8520	W08164B1	BS-01-DI2, BS-01-PI2	NO CONTAMINATION FOUND			
R8548	W08164B1	GPTHO2-1, GPTHO2-1D, GPTHO2-2, GPTHO2-3, GPTHO2-4, GPTH02-1MS, GPTHO2-1MSD, BS-01-RI2	NO CONTAMINATION FOUND			

TABLE 4 - 31

CHLORINATED HERBICIDES DETECTED IN METHOD BLANKS
NCBC GULFPORT HO

SDG NUMBER	BLANK ID	RELATED ENVIRONMENTAL SAMPLES	CONTAMINANT	MB CONC.	UNITS	VALIDATION QUALIFIER
R8520	HWB10817	BS-01-DI2, BS-01-PI2	NO CONTAMINATION FOUND			
R8548	HWB10818	GPTHO2-1, GPTHO2-1D, GPTHO2-2, GPTHO2-3, GPTHO2-4, GPTH02-1MS, GPTHO2-1MSD, BS-01-RI2	NO CONTAMINATION FOUND			

TABLE 4 - 32

METALS DETECTED IN METHOD BLANKS
NCBC GULFPORT HO

SDG NUMBER	BLANK ID	RELATED ENVIRONMENTAL SAMPLES	CONTAMINANT	MB CONC.	UNITS	VALIDATION QUALIFIER
R8520	PBLK	BS-01-PI2, BS-01-DI2	BARIUM	3.07	ug/L	U
		BS-01-PI2, BS-01-DI2	ZINC	3.20	ug/L	U
R8548	PBLK	BS-01-RI2	BARIUM	3.07	ug/L	U
		BS-01-RI2	ZINC	3.20	ug/L	U
		GPTH02-1, GPTH02-1D, GPTH02-2, GPTH02-3, GPTH02-4, GPTH02-4MS, GPTH02-4MD	BARIUM	3.07	ug/L	
		GPTH02-1, GPTH02-1D, GPTH02-2, GPTH02-3, GPTH02-4, GPTH02-4MS, GPTH02-4MD	ZINC	3.20	ug/L	

than the IDL, the sample result for the blank contaminant was amended as estimated non-detected.

- J Validation Qualifier. If a sample result for the blank contaminant was greater than the IDL and less than 10 times the blank value, when the absolute of the negative blank value id greater than the IDL the result was amended as estimated at the laboratory value.

4.1 Trip Blanks

Trip blanks contained deionized water from the laboratory and consisted of samples bottles which were similar to the environmental sample containers. The trip blanks were prepared and packaged at the laboratory prior to the sampling event and traveled with the sample bottles to the site. The trip blank bottles were not opened at the site or anytime prior to laboratory analysis.

Target compounds detected in the trip blank sample (Table 4-1) consisted of:

- GC/MS Volatiles (Table 4-1)
  acetone

The compound acetone is a common laboratory contaminant and its presence in the trip blank may be attributed to laboratory contamination. Some analytical results required qualification due to the trip blank contamination. However, based on the assessment of the trip blank results for representativeness, the analytical data is acceptable.

4.2 Field Blanks

The field blank, BS-01-PI2, was a sample of potable water from the source at the field staging area and the deionized water blank, BS-01-DI2, was prepared from the source potable water. The field blanks were prepared at the site and placed in containers that were similar to those used for the environmental samples. Semivolatiles, polynuclear aromatic hydrocarbons, pesticide/PCBs, kepone, organophosphorous pesticides, herbicides, cyanide and sulfide target compounds were not detected in the field blank samples (Tables 4-4, 4-5, 4-6, 4-7, 4-8, 4-9, 4-11 and 4-12). The field blanks that were analyzed for the dioxin/furan fraction were rejected due to gross laboratory contamination. The results were not reported with the dioxin/furan fraction due to gross laboratory method blank contamination. However, the lack of a field blank does not impact the analytical data because there was no contamination in other associated QC blanks. The data points from the rejected field blanks were not considered in the total data points, so their rejection does not impact the overall completion goal for the fraction. Target compounds and analytes detected in the field blank samples consisted of:

- GC/MS Volatiles (Table 4-2)
  carbon disulfide

- Metals (Table 4-10)
  copper

The detected carbon disulfide result in both field blanks may be attributed to laboratory contamination. The metals analyte can be attributed to the water source, the water treatment system that was used to make the water or laboratory artifacts.

Target analytes were detected in some of the field blanks. Some of the analytical data required qualification. However, based on assessment of field blanks for representativeness the analytical data was acceptable for each SDG.

4.3 Equipment Rinseate Blanks

The equipment rinseate blank was prepared by rinsing a piece of decontaminated sampling equipment with deionized water from a field DI unit. A sample of this water was collected and placed in sample containers similar to those used for the environmental samples. Volatile organics, dioxin/furan compounds, semivolatile organics, polynuclear aromatic hydrocarbons, pesticides/PCBs, kepone, organophosphorous pesticides, herbicides, cyanide, and sulfide target compounds were not detected in equipment rinseate blank samples (Tables 4-13, 4-14, 4-15, 4-16, 4-17, 4-18, 4-19, 4-20, 4-22, and 4-23). Target analytes detected in the equipment rinseate blank samples consisted of:

- Metals (Table 4-20)
  copper

The inorganic analyte can be attributed to the water source, the water treatment system that was used to make the water or laboratory artifacts. The metals analyte was detected below the CRDL. The data did not require qualification due to the detected copper in the rinseate blank.

Based on assessment of equipment rinseate blanks for representativeness the analytical data was acceptable for all SDGs.

4.4 Method Blanks

The method blanks were a sample of deionized water that is prepared by the laboratory at the time of analysis. Method blanks undergo the same analytical process as the corresponding environmental samples and associated field blanks. The purpose of the method blank is to assess the potential for target compounds and analytes to "contaminate" the sample during analysis. Volatiles, dioxin/furans, semivolatiles, pesticides/PCBs, kepone, organophosphorous pesticides, and and herbicide target compounds were not detected in method blank samples (Tables 4-24, 4-25, 4-26, 4-28, 4-29, 4-30, and 4-31). Target analytes detected in the method blank samples consisted of:

- Polynuclear Aromatic Hydrocarbons (PAH) (Table 4-27)
  anthracene

- Metals (Table 4-32)
  barium
  zinc

The PAH compounds in the method blank was the result of laboratory contamination. The barium and zinc can be attributed to the water source, the water treatment system that was used to make the water or laboratory artifacts.

Because target analytes were detected in some of the method blanks, some of the analytical results were qualified. However, based on assessment of method blanks for representativeness the analytical data was acceptable for each SDG.

4.5 Holding Times

Holding times requirements are utilized in an effort to minimize the degradation or concentration of constituents in a particular matrix over time. The stability of the constituents is determined to the best extent and then a reasonable time limit is imposed under which the samples must be extracted or prepared and then analyzed. The holding times regulations assume that the samples have been properly preserved according to the guidelines, either at the laboratory or in the field. Analytical results from samples with holding time violations are qualified as estimated, J/UJ, due to the potential for compromising the integrity of the samples. All results qualified for holding times non-compliance are considered to be useable. The positive results are qualified as estimated, J, in samples with holding times exceeded by up to five (5) days. The non-detect and positive results are qualified as estimated, J/UJ, in samples with holding times exceeded from six (6) days. No analytical data was rejected due to holding times violations.

All holding times requirements, extraction and analytical, were met with the exception of dioxin/furans, samples BS-01-PI2RE and GPTH02-1RE for semivolatiles, and BS-01-PI2RE and BS-01-DI2RE for organophosphorous pesticides, and all RE samples for the polynuclear aromatic hydrocarbons fraction. The samples noted were re-extracted and reanalyzed for various reasons. However, all re-extractions for these fractions were rejected in favor of the original analysis. These rejections do not impact the completion goals because viable data points were obtained from the original analyses. All of the dioxin/furan samples were reextracted outside of the extraction holding time due to gross laboratory contamination observed in the original extraction. All results, positive and non detect, were qualified as estimated (J/UJ) with a potential low bias (L).

5.0 COMPARABILITY

Comparability is qualitative measure designed to express the confidence with which one data set may be compared to another. The analytical samples were collected and transported to the chemical analytical laboratory in accordance with standard procedures and were analyzed in conformance with acceptable USEPA procedures (Refer to Table 5-1 below). The analytical data are reported in standard units (micrograms per liter, micrograms per kilogram, etc.).

The methods used to collect the environmental samples and the methods used to analyze the samples should assure comparability of the analytical data.

TABLE 5-1
USEPA Procedures (CLP or SW-846 Methodologies)

U.S. EPA Method	Description
SW-846, Method 8240	Volatile Organics
SW-846, Method 8290	Dioxin/Furans
SW-846, Method 8270	Semivolatile Organics
SW-846, Method 8310	Polynuclear Aromatic Hydrocarbons
SW-846, Method 8080	Pesticides/PCBs/Kepone
SW-846, Method 8140	Organophosphorous Pesticides
SW-846, Method 8140	Chlorinated Herbicides
CLP, ILMO2.1	Metals
CLP, ILMO2.1	Cyanide
SW-846, Method 9030	Sulfide

6.0 COMPLETENESS

Completeness is the quantitative measure of the amount of data obtained from a measurement process compared with the amount expected to be obtained under the conditions of measurement. The completeness goal for laboratory analysis for this project was 85 percent useable data. Unusable analytical data are those results reported by the laboratory but rejected during the data validation process. A summary of the completeness goal for NCBC Gulfport is provided in Table 6-1. For more detailed completeness goal tables, please refer to Appendix C.

TABLE 6-1
COMPLETION GOAL (>85%)

	QC	GW	OVERALL
GC/MS Volatiles	95.5	96.6	96.0
Dioxin/Furans	100.0	100.0	100.0
Semivolatiles	89.7	93.6	91.6
PAHs	100.0	100.0	100.0
Pesticide/PCBs	100.0	100.0	100.0
Organophos. Pest.	100.0	100.0	100.0
Herbicides	100.0	100.0	100.0
Kepone	100.0	100.0	100.0
Metals	100.0	100.0	100.0
Cyanide	100.0	100.0	100.0
Sulfide	100.0	100.0	100.0

MATRIX KEY

QC = QC Samples
GW = Ground Water Samples

The analytical data met the 85 percent completeness goal for every fraction. The narrative following describes any extenuating factors involved in the data resolution.

GC/MS Volatiles, Non-Compliant RRFs and %Ds Four (4) volatile compounds, did not always meet the continuing calibration criteria of >0.05 for RRF (Relative Response Factor) or 90% for %D (Percent Difference). The RRF values fell below 0.05 and the %D values exceeded 90% in analyses affecting the SDGs associated with this project. All non-detect sample results associated with the continuing calibrations that exhibited these non-compliant RRFs and %Ds are rejected, R, (Table A-1). All positive sample results associated with the continuing calibrations that exhibited these non-compliant RRFs or %Ds are qualified as estimated, J, (Table A-1). The non-compliant calibrations resulted in the rejection of twenty-four (24) data points. The completeness goal for the fraction was still met.

Non-detect results that were rejected for the compounds may be evaluated by adjusting the CRQL to the concentration of the continuing calibration standard and qualifying the results as not detected at an estimated concentration, UJ. The non-detect qualification at the concentration of the continuing calibration standard insures that the instrumentation is capable of detecting the compound at a known concentration.

Semivolatiles, Non-Compliant RRFs and/or %Ds Seven (7) semivolatile compounds; did not always meet the initial and continuing calibration criteria of >0.05 for RRF (Relative Response Factor) or

90% for %D (Percent Difference). The RRF values fell below 0.05 or the %D value was above 90% in analyses affecting the SDGs associated with this project. All non-detect sample results associated with continuing calibrations that exhibited these non-compliant RRFs or %Ds are rejected, R, (Table A-1). All positive sample results associated with the continuing calibrations that exhibited these non-compliant RRFs or %Ds are qualified as estimated, J, (Table A-1). The non-compliant calibrations resulted in the rejection of forty-eight (48) data points. The completeness goal for the fraction was still met.

Non-detect results that were rejected for the compounds may be evaluated by adjusting the CRQL to the concentration of the continuing calibration standard and qualifying the results as not detected at an estimated concentration, UJ. The non-detect qualification at the concentration of the continuing calibration standard insures that the instrumentation is capable of detecting the compound at a known concentration.

GC/MS Volatiles/Semivolatiles Target compounds for both the volatile and semivolatile fractions were qualified because of non-compliant calibrations. Volatile and semivolatile compounds did not always meet the initial and/or continuing calibration criteria for RSD (Relative Standard Deviation), and %D (Percent Difference). All results qualified for calibration % RSD and % D deficiencies (J/UJ) are considered to be useable. For the compounds in the GC/MS volatile and semivolatile analyses that did not meet calibration criteria, all positive results are qualified as estimated (J) (%Ds >25%) and all non detect results are qualified as estimated (UJ) (>50% D <90%) due to calibration deficiencies.

Metals The positive results for the target analyte zinc was qualified as estimated, J, due to non-compliant serial dilution result.

7.0 PARCC SUMMARY

The purpose of evaluating the quality of the analytical data using the PARCC criteria was to address the qualification of the data in regards to evaluation of the presence, magnitude and characteristics of hazardous substances at NCBC Gulfport. Overall, the chemical analytical data are acceptable and exceeded the completion goal of 85 percent. Tables 7-1 and 7-2 provides a tabulation of the assessment of PARCC criteria each SDG for water samples and quality control samples, respectively.

7.1 Water Samples

The analytical data for this matrix was acceptable for all PARCC criteria categories. Eight (8) volatile data points were rejected due to continuing calibration standards which did not meet QC criteria. The completion goal was met. Twenty-eight (28) semivolatile data points were rejected due to continuing calibration standards which did not meet QC criteria. The completion goal was met.

7.2 QC Samples

The analytical data for this matrix was acceptable for all PARCC criteria categories. Sixteen (16) volatile data points were rejected due to continuing calibration standards which did not meet QC criteria. The completion goal was met. Twenty (20) semivolatile data points were rejected due to continuing calibration standards which did not meet QC criteria. The completion goal was met. Twenty-five (25) semivolatile data points were rejected due to surrogate recovery less than 10%. The completion goal was met.

TABLE 7 - 1
PARCC CRITERIA SUMMARY
GROUNDWATER SAMPLES
NCBC GULFPORT HO

SDGs	PRECISION	ACCURACY	REPRESENT-ATIVENESS	COMPARABILITY	COMPLETENESS
R8520	ACCEPTABLE	ACCEPTABLE	ACCEPTABLE	ACCEPTABLE	ACCEPTABLE (2) WITH REJECTIONS
R8548	ACCEPTABLE	ACCEPTABLE	ACCEPTABLE	ACCEPTABLE	ACCEPTABLE (1) (2) WITH REJECTIONS

(1) Eight (8) volatile data points were rejected due to initial and/or continuing calibration standards which did not meet QC criteria. Completion goal was met.

(2) Twenty-eight (28) semivolatile data points were rejected due to initial and/or continuing calibration standards which did not meet QC criteria. Completion goal was met.

TABLE 7 - 2
PARCC CRITERIA SUMMARY
QUALITY CONTROL SAMPLES
NCBC GULFPORT HO

SDGs	PRECISION	ACCURACY	REPRESENT-ATIVENESS	COMPARABILITY	COMPLETENESS
R8520	ACCEPTABLE	ACCEPTABLE (3) WITH REJECTIONS	ACCEPTABLE	ACCEPTABLE	ACCEPTABLE (1) (2) WITH REJECTIONS
R8548	ACCEPTABLE	ACCEPTABLE (3) WITH REJECTIONS	ACCEPTABLE	ACCEPTABLE	ACCEPTABLE (1) (2) WITH REJECTIONS

(1) Sixteen (16) volatile data points were rejected due to initial and/or continuing calibration standards which did not meet QC criteria. Completion goal was met.

(2) Twenty (20) semivolatile data points were rejected due to initial and/or continuing calibration standards which did not meet QC criteria. Completion goal was met.

(3) Twenty-five (25) semivolatile data points were rejected in one sample, due to surrogate recovery less than 10%. Completion goal was met.

REFERENCES

ABB-ES, (ABB Environmental Services, Inc.) 1993. Monitoring Well Installation Program Herbicide Orange Site A, Naval Construction Battalion Center, Gulfport, Mississippi Work Plan; Prepared for Southern Division Naval Facilities Engineering Command; November 1993.

ABB Environmental Services, Inc. (ABB-ES), 1991. Quality Assurance Program Plan, Navy CLEAN Program, District I, March.

ABB-ES, 1992. RI/FS Sampling and Analysis plan, Naval Construction Battalion Center, Gulfport, Mississippi, June.

NEESA, 1988., Sampling and Chemical Analysis Quality Assurance Requirements for the Navy Installation Restoration Program, Naval Energy and Environmental Support, 20.2-047B, June 1988.

USEPA, 1988a., Laboratory Data Validation Functional Guidelines for Evaluating Inorganic Analyses, United States Environmental Protection Agency, July 1988.

USEPA, 1989., Risk Assessment Guidance for Superfund Volume I Human Health Manual (Part a), Interim Final, United States Environmental Protection Agency, 1989.

USEPA, 1988b., National Functional Guidelines for Organic Data Review, United States Environmental Protection Agency, June 1992.

USEPA, 1988a., Laboratory Data Validation Functional Guidelines for Evaluating Inorganic Analyses, United States Environmental Protection Agency, July 1988.

USEPA, 1990a., Guidance for Data Usability in Risk Assessment, United States Environmental Protection Agency, EPA 540 G-90/008, October 1990.

USEPA, 1986., Test Methods for Evaluating Solid Waste, Physical/Chemical Methods, SW-846, September 1986.

USEPA, 1990c., Statement of Work for Inorganic Analysis, Multi-Media, Multi-Concentration, United States Environmental Protection Agency Contracts Laboratory Program, Document No. ILM02.1, July 1988.

APPENDIX A

CALIBRATION SUMMARY

TABLE A-1

INITIAL AND CONTINUING CALIBRATION
VOLATILE ORGANIC COMPOUNDS
NCBC GULFPORT HO

ICAL = INITIAL CALIBRATION = %RSD	SDG R8520	SDG R8548		
CCAL = CONTINUING CALIBRATION = %D	**CCAL1**	**CCAL1**	**CCAL2**	**CCAL3**
DATE	081794	08/18/94	8/23/94	8/24/94
INSTRUMENT ID	5100	5100	5100	5100
CALIBRATION CRITERIA	RRF/%D	RRF/%D	RRF/%D	RRF/%D
ACETONE				45.2
DICHLORODIFLOUROMETHANE	33.8	35.8	35.8	
2-BUTANONE				0.041/28.1
DIBROMOCHLOROMETHANE			28.5	
BROMOFORM			46.6	27.4
TETRACHLORETHENE			32.8	
IODOMETHANE			33.20	34.2
ISOBUTANOL	0.018/50.0	0.015	0.017	0.007/68.2
PROPIONITRILE				42.9
METHACRYLONITRILE				33.4
ACETONITRILE	32.4			
1,4-DIOXANE	0.003	0.002/50.0	0.006	0.002/66.7
METHYL METHACRYLATE				29.0
1,2-DIBROMO-3-CHLOROPROPANE		38.9		36.4
PENTACHLOROETHANE	35.9	49.4		
CHLOROPRENE	97.4	99.9		

SDGS, STANDARDS, AND ASSOCIATED SAMPLES

SDG R8520

CCAL1: BS-01-DI2, BS-01-PI2

SDG R8548

CCAL1: BS-01-RI2

CCAL2: BS-02-TB2, GPTH02-1D, GPTH02-2, GPTH02-3, GPTH02-4, GPTH02-1, GPTH02-1MS

CCAL3: GPTH02-1MSD

TABLE A - 2

INITIAL AND CONTINUING CALIBRATION
SEMIVOLATILE ORGANIC COMPOUNDS
NCBC GULFPORT HO

ICAL = INITIAL CALIBRATION = %RSD	SDG R8520		SDG 8548	
CCAL = CONTINUING CALIBRATION = %D	**CCAL1**	**CCAL2**	**CCAL1**	**CCAL2**
DATE	082694	091494	090294	090694
INSTRUMENT ID	4600	4600	4600	4600
CALIBRATION CRITERIA	RRF/%D	RRF/%D	RRF/%D	RRF/%D
3-NITROANILINE	54.1			
4-NITROANILINE	31.0			
4-NITROPHENOL		41.1		
BENZIDINE	99.9			
4-AMINOBIPHENYL	63.4			
P-PHENYLENEDIAMINE	56.4	47.9		
HEXACHLOROPROPENE			99.9	99.9
SAFROLE			32.7	
ARAMITE-1			28.7	
ARAMITE-2				61.3
1,3,5-TRINITROBENZENE	30.0	66.0	35.2	40.4
4-NITROQUINOLINE-1-OXIDE	0.046/56.6	0.037	0.034/67.9	0.034/67.9
3,3'-DIMETHYLBENZIDINE	67.1	-45.9	99.9	99.9
PHENYL-TERT-BUTYLAMINE			46.6	32.6
1-NAPHTHYLAMINE			90.7	71.3
2-NAPHTHYLAMINE			99.9	99.9
2,3,4,6-TETRACHLOROPHENOL			31.6	
4-AMINOBIPHENYL			99.9	99.9
HEXACHLOROPHENE	0.031/75.8	0.026/40.9	0.023/82.0	0.020/84.4

SDGS, CALIBRATIONS AND ASSOCIATED SAMPLES:

SDG R8520

CCAL1: BS-01-DI2, BS-01-PI2

CCAL2: BS-01-PI2RE

SDG 8548

CCAL1: BS-01-RI2, GPTH02-1D, GPTH02-2, GPTH02-3, GPTH02-4, GPTH02-1, GPTH02-1MS, GPTH02-1MSD

CCAL2: GPTH02-1DRE, GPTH02-1RE, GPTH02-1MSRE, GPTH02-1MSDRE

APPENDIX B

SERIAL DILUTION SUMMARY

TABLE B - 1

WATER SAMPLE SERIAL DILUTION
METALS SUMMARY TABLE
NCBC GULFPORT HO

SAMPLE GPTHO2-1		SDG R8548
%D = PERCENT DIFFERENCE		%D
METALS ANALYTES	UNITS	
ANTIMONY	ug/L	NC
ARSENIC	ug/L	NA
BARIUM	ug/L	0.5
BERYLLIUM	ug/L	100
CADMIUM	ug/L	100
CALCIUM	ug/L	4.3
CHROMIUM	ug/L	10.3
COBALT	ug/L	11.5
COPPER	ug/L	1.8
IRON	ug/L	1.6
LEAD	ug/L	NA
MAGNESIUM	ug/L	0.6
MANGANESE	ug/L	1.5
MERCURY	ug/L	NA
NICKEL	ug/L	100
SELENIUM	ug/L	NA
SILVER	ug/L	NC
SODIUM	ug/L	2.70
THALLIUM	ug/L	NA
VANADIUM	ug/L	4.3
ZINC	ug/L	*10.2
TIN	ug/L	NC

*** - INDICATES VALUE OUTSIDE QC LIMITS**
NC DENOTES NO CALCULATION DUE TO NON-DETECT RESULTS IN BOTH SAMPLES
NA DENOTES COMPOUND NOT ANALYZED FOR

CORRESPONDING SDG'S AND ASSOCIATED SAMPLES

R8548: GPTH02-1, GPTH02-1D, GPTH02-2, GPTH02-3, GPTH02-4, BS-01-RI2
R8520: BS-01-DI2, BS-01-PI2

ANALYTE	RPD
	WATER
ALL ICP ANALYTES	+/-10%

+/-10% RULE ONLY APPLIES TO RESULTS GREATER THAN 50 TIMES THE IDL
(SOME VALUES ROUNDED TO LIMIT %Ds TO THREE (3) SIGNIFICANT FIGURES)

APPENDIX C

REJECTED DATA SUMMARY

TABLE C-1
GC/MS VOLATILES - REJECTED DATA
NCBC GULFPORT HO

SDG	# SAMPLES/MATRIX			# OF COMPOUNDS REJECTED PER MATIX	
	QC	GW		QC	GW
R8548	3	4		7	8
R8520	3	0		9	0
GRAND TOTAL	6	4		16	8
COMPLETION GOAL (>85%)				95.5%	96.6%

OVERALL COMPLETENESS
96.0%

MATRIX KEY

QC = QC SAMPLES
GW = GROUND WATER SAMPLES

*** 59 TARGET COMPOUNDS PER SAMPLE**

TABLE C - 2
DIOXIN/FURANS - REJECTED DATA
NCBC GULFPORT HO

				# OF COMPOUNDS REJECTED PER MATIX	
SDG	# SAMPLES/MATRIX			QC	GW
	QC	GW			
R8548	2	4		0	0
GRAND TOTAL	2	4		0	0
COMPLETION GOAL (>85%)				100.0%	100.0%

OVERALL COMPLETENESS
100.0%

MATRIX KEY

QC = QC SAMPLES
GW = GROUND WATER SAMPLES

*** 17 TARGET CONGENERS PER SAMPLE**

TABLE C - 3
SEMIVOLATILES - REJECTED DATA
NCBC GULFPORT HO

SDG	# SAMPLES/MATRIX			# OF COMPOUNDS REJECTED PER MATIX	
	QC	GW		QC	GW
R8548	2	4		14	28
R8520	2	0		31	0
GRAND TOTAL	4	4		45	28
COMPLETION GOAL (>85%)				89.7%	93.6%

OVERALL COMPLETENESS
91.6%

MATRIX KEY

QC = QC SAMPLES
GW = GROUND WATER SAMPLES

*** 109 TARGET COMPOUNDS PER SAMPLE**

TABLE C - 4
POLYNUCLEAR AROMATIC HYDROCARBONS - REJECTED DATA
NCBC GULFPORT HO

				# OF COMPOUNDS REJECTED PER MATIX	
SDG	# SAMPLES/MATRIX			QC	GW
	QC	GW			
R8548	2	4		0	0
R8520	2	0		0	0
GRAND TOTAL	4	4		0	0
COMPLETION GOAL (>85%)				100.0%	100.0%

OVERALL COMPLETENESS
100.0%

MATRIX KEY

QC = QC SAMPLES
GW = GROUND WATER SAMPLES

*** 16 TARGET CONGENERS/ISOMERS PER SAMPLE**

TABLE C - 5
PESTICIDE/PCBS - REJECTED DATA
NCBC GULFPORT HO

SDG	# SAMPLES/MATRIX		# OF COMPOUNDS REJECTED PER MATIX	
	QC	GW	QC	GW
R8548	2	4	0	0
R8520	2	0	0	0
GRAND TOTAL	4	4	0	0
COMPLETION GOAL (>85%)			100.0%	100.0%

OVERALL COMPLETENESS
100.0%

MATRIX KEY

QC = QC SAMPLES
GW = GROUND WATER SAMPLES

*** 30 TARGET COMPOUNDS PER SAMPLE**

TABLE C - 6
ORGANOPHOSPHOROUS PESTICIDES - REJECTED DATA
NCBC GULFPORT HO

SDG	# SAMPLES/MATRIX			# OF COMPOUNDS REJECTED PER MATIX	
	QC	GW		QC	GW
R8548	2	4		0	0
R8520	2	0		0	0
GRAND TOTAL	4	4		0	0
COMPLETION GOAL (>85%)				100.0%	100.0%

OVERALL COMPLETENESS
100.0%

MATRIX KEY

QC = QC SAMPLES
GW = GROUND WATER SAMPLES

*** 9 TARGET COMPOUNDS PER SAMPLE**

TABLE C - 7
HERBICIDES - REJECTED DATA
NCBC GULFPORT HO

SDG	# SAMPLES/MATRIX			# OF COMPOUNDS REJECTED PER MATIX	
	QC	GW		QC	GW
R8548	2	4		0	0
R8520	2	0		0	0
GRAND TOTAL	4	4		0	0
COMPLETION GOAL (>85%)				100.0%	100.0%

OVERALL COMPLETENESS
100.0%

MATRIX KEY

QC = QC SAMPLES
GW = GROUND WATER SAMPLES

*** 4 TARGET COMPOUNDS PER SAMPLE**

TABLE C - 8
KEPONE - REJECTED DATA
NCBC GULFPORT HO

SDG	# SAMPLES/MATRIX		# OF COMPOUNDS REJECTED PER MATIX	
	QC	GW	QC	GW
R8548	2	4	0	0
R8520	2	0	0	0
GRAND TOTAL	4	4	0	0
COMPLETION GOAL (>85%)			100.0%	100.0%

OVERALL COMPLETENESS
100.0%

MATRIX KEY

QC = QC SAMPLES
GW = GROUND WATER SAMPLES

*** 1 TARGET COMPOUND PER SAMPLE**

TABLE C - 9
TOTAL METALS - REJECTED DATA
NCBC GULFPORT HO

				# OF COMPOUNDS REJECTED PER MATIX	
SDG	# SAMPLES/MATRIX			QC	GW
	QC	GW			
R8548	2	4		0	0
R8520	2	0		0	0
GRAND TOTAL	4	4		0	0
COMPLETION GOAL (>85%)				100.0%	100.0%

OVERALL COMPLETENESS
100.0%

MATRIX KEY

QC = QC SAMPLES
GW = GROUND WATER SAMPLES

*** 22 TARGET ANALYTES PER SAMPLE**

TABLE C - 10
CYANIDE - REJECTED DATA
NCBC GULFPORT HO

SDG	# SAMPLES/MATRIX			# OF COMPOUNDS REJECTED PER MATIX	
	QC	GW		QC	GW
R8548	2	4		0	0
R8520	2	0		0	0
GRAND TOTAL	4	4		0	0
COMPLETION GOAL (>85%)				100.0%	100.0%

OVERALL COMPLETENESS
100.0%

MATRIX KEY

QC = QC SAMPLES
GW = GROUND WATER SAMPLES

*** 1 TARGET COMPOUND PER SAMPLE**

TABLE C - 11
SULFIDE - REJECTED DATA
NCBC GULFPORT HO

SDG	# SAMPLES/MATRIX		# OF COMPOUNDS REJECTED PER MATIX	
	QC	GW	QC	GW
R8548	2	4	0	0
R8520	2	0	0	0
GRAND TOTAL	4	4	0	0
COMPLETION GOAL (>85%)			100.0%	100.0%

OVERALL COMPLETENESS
100.0%

MATRIX KEY

QC = QC SAMPLES
GW = GROUND WATER SAMPLES

*** 1 TARGET COMPOUND PER SAMPLE**

4.7.1

July 27, 1994
Marland Dulaney/Greg Brown
Review Comments; TM No. 1, Former HO Site A, GW Sampling Event, No. 1
08504.51

Page/Paragraph	Comment
Forward	GB: (Optional) Suggest you update foreword to discuss RCRA as well as CERCLA investigations. Standard we use here is included for your consideration. MD: pg ii looks like "cut & paste" error. Edit as needed for this report.
Executive Summary pg iii	GB: Reference approved workplans MD: Typo
pg iv	GB: Editorial: "...based on initial monitoring data." MD: Editorial: see hardcopy.
1.0 Introduction	GB: Some editorial comments, see hard copy. I was a bit confused at first reading of the site background info. I didn't get the data in the sequence I expected, but that may be an idiosyncratic problem. Most of my questions were answered by the time I finished this section. You may want to reconsider the organization... The history and relationship of Areas B and C to A is not clear. This is particularly important since Areas B and C look like they are upgradient of Area A, making the so called upgradient well suspect if these are possible dioxin source areas too. I guess, if the upgradient well is contaminated from a plume from B and C, and there if the downgraident wells at A are not statistically higher, then the claim can be made that there is no release from A. But what do you do about B and C? Need to address this issue internally with the client, if not here in the report. Reference applicable RCRA groundwater monitoring standards being applied to this site. I suspect its 40 CFR 264, Subpart F, but it may be different for the delisting petition. The groundwater data is not to compare with "background" whatever that may be, but to see if upgradient is different for down gradient in order to determine if a release from the site has occurred. I'm having a copy of the RCRA groundwater monitoring data analysis guidance made and will send it up to you for consideration. MD: Editorial comments throughout, see hard copy.
2.0, Field Program	MD: Editorial comments throughout, see hard copy; discuss planned GW monitoring; Table 2-2, Check 2/18 water level measurement for HO-7. Report time period for well development. GB: Editorial comments throughout, see hard copy; Table 2-1 & 2-4, Check to see if coordinate reference is correct; Figure 2-2, footnote that water level contours are based on afternoon measurements. Figure 2-3: The four point water level elevations indicate that the upgradient well, GPT-A-1, may not be upgradient. Were the well points measured at the same time, too, and can we use their elevations to confirm that GPT-A-1 is indeed upgradient?

Page/Paragraph	Comment
3.0, Analytical Program	MD: Editorial comments throughout, see hard copy; GB: Editorial comments throughout, see hard copy; reference equivalent NEESA DQO jargon where needed; Table 3-1, suggest caveat for PQL in endnotes; inconsistency with page 4-3 about MPC and "true positive results"; Need to think about how MPC values will be used in your final statistical analysis of all the groundwater data, e.g., can they be considered non-detects (I hope)? This could be a "Phil Stapleton" question if he is still available. Maybe the data validators can help.
4.0, Investigation Results	MD: Editorial comments throughout, see hard copy; MUY IMPORTANTE! Table 4-6 TEF calculations are wrong. (1) calculated TEF for each congener; (2) sum calculated TEFs for all congeners; (3) compare to MCL for 2,3,7,8 TCDD. GB: Editorial comments throughout, see hard copy; Table 4-3, suggest footnoting values that are "MPC"; Page 4-3, not consistent with Page 3-10; Table 4-1, Why are total values being shown? What does that mean?; Table 4-5, Sulfide typically reported in mg/l (wet chemistry, doesn't get down to ppb range too well); Table 4-6, unit problem (not reported, and decimal points might be in weird places). I suggest that you don't make value judgements as to degree of contamination. This should be a factual reporting of data. Data analysis would be conducted upon completion of final sampling round. Don't talk about background, I don't think it applies here.
5.0, Summary	MD: You add all the dioxins together to get the TCDD equivalent. This sum is compared with the MCL. GB: Editorial comments throughout, see hard copy
APPENDICES	GB: not reviewed in detail, recommend project team confirm consistency between appendix data and report narrative & data tables.