N62604.AR.001990
NCBC GULFPORT
5090.3a

SEDIMENT STABILIZATION WORK PLAN SITES 8B AND 8C HERBICIDE ORANGE STORAGE ARA NCBC GULFPORT MS
07/01/2015
RESOLUTION CONSULTANTS

SEDIMENT STABILIZATION WORK PLAN

STABILIZATION PILOT TEST WORK PLAN
CONSTRUCTION QUALITY CONTROL PLAN
WASTE MANAGEMENT AND ENVIRONMENTAL PROTECTION PLAN
SITE PLAN
CONSTRUCTION SCHEDULE

SITES 8B AND 8C HERBICIDE ORANGE STORAGE AREA
NAVAL CONSTRUCTION BATTALION CENTER GULFPORT
GULFPORT, MISSISSIPPI

Revision: 0

Prepared for:

Department of the Navy
Naval Facilities Engineering Command Southeast
Building 135 N, P.O. Box 30
Jacksonville, Florida 32212-0030

Prepared by:

Resolution Consultants
A Joint Venture of AECOM & EnSafe
1500 Wells Fargo Building
440 Monticello Avenue
Norfolk, Virginia 23510

Contract Number: N62470-11-D-8013
CTO JM70

July 2015

List of Acronyms

2,4,5-T	2,4,5-Trichlorophenoxyacetic acid
2,4-D	2,4-Dichlorophenoxyacetic acid
ANSI	American National Standards Institute
APP	Accident Prevention Plan
ASTM	American Society for Testing and Materials
BECC	Birmingham Engineering & Construction Consultants, Inc.
CBR	California Bearing Ratio
CFR	Code of Federal Regulations
CY	Cubic Yards
EPP	Environmental Protection Plan
HO	Herbicide Orange
kg	Kilogram
MDEQ	Mississippi Department of Environmental Quality
MS811	Mississippi 811, Inc.
NAVFAC	Naval Facilities Engineering Command
Navy	United States Navy
NCBC	Naval Construction Battalion Center
ng/kg	Nanogram per Kilogram
OMC	Optimum Moisture Content
OSHA	Occupational Safety and Health Administration
pg/L	Picograms per Liter
PM	Project Manager
PPE	Personnel protective equipment
psi	Pounds per square inch
QC	Quality control
QCP	Quality Control Plan
RCRA	Resource Conservation and Recovery Act
SAP	Sampling and Analysis Plan
SPLP	Synthetic Precipitation Leaching Procedure
SSHP	Site Safety & Health Plan
SSO	Site Safety Officer
SWPPP	Storm Water Pollution Prevention Plan

List of Acronyms (continued)

TCDD	2,3,7,8-Tetrachlorodibenzo-p-dioxin
TCDF	Tetrachlorodibenzofuran
TEQ	Toxicity Equivalent
TRG	Target Remediation Goal
U.S. EPA	United States Environmental Protection Agency
UCS	Unconfined Compressive Strength
USAF	United States Air Force
WMP	Waste Management Plan
Work Plan	Stabilization Pilot Test Work Plan

Table of Contents

1.0 INTRODUCTION 1-1
1.1 Site Location 1-1
1.2 Site Background 1-1
1.3 Drum Removals 1-2
1.4 Historical Investigation Activities 1-2
1.5 Initial Site Remedy — Incineration 1-5
1.6 Stabilization Activities (2001-2007) 1-5
1.7 Long-Term Monitoring 1-6
1.8 Treatability and Pilot Test Decision 1-6
1.9 Treatability Test 1-11

2.0 STABILIZATION PILOT TEST WORK PLAN 2-1
2.1 Objectives 2-1
2.2 Project Scope 2-1
2.3 Pilot Test Procedures 2-3
2.3.1 Base and Site Access 2-3
2.3.2 Utility Mark-out 2-3
2.3.3 Permitting 2-4
2.3.4 Mobilization 2-4
2.3.5 Construction Facilities 2-5
2.3.6 Erosion, Sedimentation, and Storm Water Control Measures 2-6
2.3.7 Vegetation Clearing 2-6
2.3.8 Grubbing 2-6
2.3.9 Preparation of Work Areas 2-7
2.3.10 Ditch Excavation and Confirmation Sampling 2-8
2.3.11 Sediment Loading and Transportation 2-9
2.3.12 Culvert Cleaning 2-10
2.3.13 Sediment Screening and Mixing 2-10
2.3.14 Preliminary Geotechnical and Moisture Testing 2-12
2.3.15 Sediment Spreading 2-13
2.3.16 Air Force Excavation Stabilization 2-13
2.3.17 Amending Sediment and Mixing 2-14
2.3.18 Compaction 2-15
2.3.19 Stabilized Sediment Geotechnical Testing 2-16
2.3.20 Stabilized Sediment Chemical Testing 2-16
2.3.21 Ditch Restoration 2-17
2.3.22 Waste Decontamination 2-17
2.3.23 Equipment Decontamination 2-18
2.3.24 Decontamination and Ditch Diversion Water 2-18
2.3.25 Post Stabilization Erosion Control 2-18
2.4 Demobilization 2-19
2.5 Reporting 2-19

3.0 CONSTRUCTION QUALITY CONTROL PLAN 3-1
3.1 Objectives 3-1
3.2 Project Organization and Responsibilities 3-1
3.2.1 Project Manager 3-1
3.2.2 Site Supervisor 3-2

3.2.3 Project QC Manager 3-2
3.2.4 Project Engineer 3-2
3.2.5 Site Safety Officer 3-4
3.2.6 Subcontractors 3-4
3.3 Quality Control Meetings 3-5
3.3.1 Pre-Construction Meeting 3-5
3.3.2 Ad Hoc Meetings 3-6
3.3.3 Construction Deficiency Meeting 3-6
3.3.4 Project Closeout Meeting 3-6
3.4 Submittals 3-6
3.4.1 Construction QC Submittals 3-6
3.4.2 Submittal Review and Control 3-7
3.5 Quality Control Inspections 3-8
3.5.1 Inspections 3-8
3.5.2 Punch List Inspection 3-8
3.5.3 Pre-Final Inspection 3-8
3.5.4 Final Acceptance Inspection 3-9
3.6 Quality Control Testing 3-9
3.7 Documentation 3-10
3.7.1 Field Documentation Operating Procedures 3-10
3.7.2 Field Logbook 3-11
3.7.3 Progress Reports 3-11
3.7.4 Project Record Close Out 3-11
3.8 Construction Change Order 3-11
3.9 Noncompliance and Corrective Action 3-11

4.0 WASTE MANAGEMENT AND ENVIRONMENTAL PROTECTION PLAN 4-1
4.1 Purpose and Scope 4-1
4.1.1 Waste Management Plan 4-1
4.1.2 Environmental Protection Plan 4-2
4.2 Non-Storm-Water Discharges 4-2
4.3 Pollution Prevention Measures 4-3
4.4 Goals 4-4
4.5 Good Housekeeping 4-4
4.6 Spill Control Practices 4-5
4.7 Contaminated Sediment 4-6
4.8 Wood, Root, and Other Fibrous Material 4-6
4.9 Decontamination Rinsate Water 4-6
4.10 Waste Generated During Sediment Screening 4-7
4.11 Secondary Site Debris 4-7

5.0 SITE PLAN 5-1

6.0 CONSTRUCTION SCHEDULE 6-1

7.0 REFERENCES 7-1

Figures

Figure 1-1 Site Location Map 1-3
Figure 1-2 Historical Investigation Results Map 1-4
Figure 1-3 USAF Excavations 1-7
Figure 1-4 Stockpile Map 1-8
Figure 1-5 Ditches to be Excavated Map 1-9
Figure 2-1 Locations of Proposed Confirmation Samples 2-11
Figure 3-1 Project Organization Chart 3-3

Tables

Table 1-1 Summary of Calculated Volumes of Sediment 1-10
Table 2-1 Summary of Project Geotechnical and Chemical Goals 2-1
Table 2-2 Materials Testing Laboratory — Preliminary Analyses 2-12
Table 2-3 Materials Testing Laboratory — Geotechnical Analyses 2-16

Appendices

Appendix A Sediment Volume Calculations
Appendix B Base Access Documents
Appendix C Nuclear Density Gauge Documentation
Appendix D NAVFAC Excavation Permit
Appendix E ASTM Standards
Appendix F Quality Control Plan Forms

1.0 INTRODUCTION

This Work Plan was prepared by Resolution Consultants under United States Navy (Navy), Naval Facilities Engineering Command (NAVFAC) contract number N62470-11-D-8013, Contract Task Order JM70, for consideration by NAVFAC Southeast and the Mississippi Department of Environmental Quality (MDEQ).

The following sections contain the plans for the engineering effort to complete sediment stabilization for Sites 8B and 8C at the Naval Construction Battalion Center (NCBC) base in Gulfport, Mississippi. These documents include:

- Stabilization Pilot Test Work Plan (Work Plan) (Section 2)
- Construction Quality Control Plan (QCP) (Section 3)
- Waste Management and Environmental Protection Plan (Section 4)
- Site Plan (Section 5)
- Schedule (Section 6)

1.1 Site Location

NCBC Gulfport occupies approximately 1,100 acres in Gulfport, Harrison County, Mississippi (Figure 1-1). Gulfport is in the southeastern corner of the state, approximately two miles north of the Gulf of Mexico. The Navy acquired the property in April 1942.

Site 8 is subdivided into three contiguous storage areas (Areas A, B, and C) located in the north-central portion of NCBC Gulfport. The three areas were based on historical levels of storage and handling of Herbicide Orange (HO) (Tetra Tech 2004). Sites 8B and 8C were periodically used as overflow storage areas, while Site 8A was continually in use.

1.2 Site Background

HO is an herbicide formulation employed during the Vietnam War to defoliate trees and shrubbery. It is an equal mixture of agricultural herbicides 2,4-dichlorophenoxyacetic acid (2,4-D) and 2,4,5-trichlorophenoxyacetic acid (2,4,5-T) in a diesel or jet fuel mixture. Historically, spills and leaks of HO occurred within Site 8, contaminating surface soil and sediment with the mixture components, 2,4,5-T and 2,4-D, as well as byproduct contaminants (dioxins and furans), primarily 2,3,7,8-tetrachlorodibenzo-p-dioxin (TCDD) (Tetra Tech 2004).

1.3 Drum Removals

From 1968 to 1977, Site 8 was used by the U.S. Air Force (USAF) for the storage of approximately 850,000 gallons of HO in 55-gallon drums (Tetra Tech, March and December 2001). It was originally believed that only 13 acres of the site, designated as Site 8A, had been used for HO storage, but two additional storage areas were later identified, including the 15-acre Site 8B and 3-acre Site 8C (Tetra Tech 2001). In 1977, the HO drums were removed from Site 8, transported to port by railroad, and placed on a ship for destruction by incineration at sea (Tetra Tech 2001). The release of dioxins at Site 8 was confirmed in 1977, and the site was fenced and left inactive until 1985.

Starting in 1985, there have been a series of remedial actions targeting both Site 8 and on- and off-base areas suspected of having been impacted by dioxins migrating from Site 8. These remedial actions were supported by soil, groundwater, surface water and sediment investigations; risk assessments; engineering planning documents; pilot tests; treatability studies, etc., the earliest of which was conducted in 1977 by the USAF.

1.4 Historical Investigation Activities

Following removal and destruction of the drums of HO, a subcontractor for the Air Force Engineering and Services Center performed soil sampling at Area 8 (EG&G 1997). Multi-depth sampling to 22 inches below ground surface was performed for 2,4-D and 2,4,5-T by compositing samples within 20-by-20-foot grids. All of Area 8A was sampled. Sampling was initially performed along the periphery of Areas 8B and 8C, where drums were typically stored. Additional sampling was performed within grids adjacent to elevated concentrations to delineate the lateral extent of contamination. This resulted in the sampling pattern displayed in Figure 1-2.

The results indicated that TCDD contamination: (1) was concentrated where drums were formerly staged; (2) shows highly variable results spatially; (3) was mainly confined to the upper two feet of soil and soil/cement. Subsequent to the investigation, soil was excavated and incinerated on site; the resulting ash was stockpiled on Site 8A. The drainage systems that connected Site 8 to the local drainage basins were not remediated.

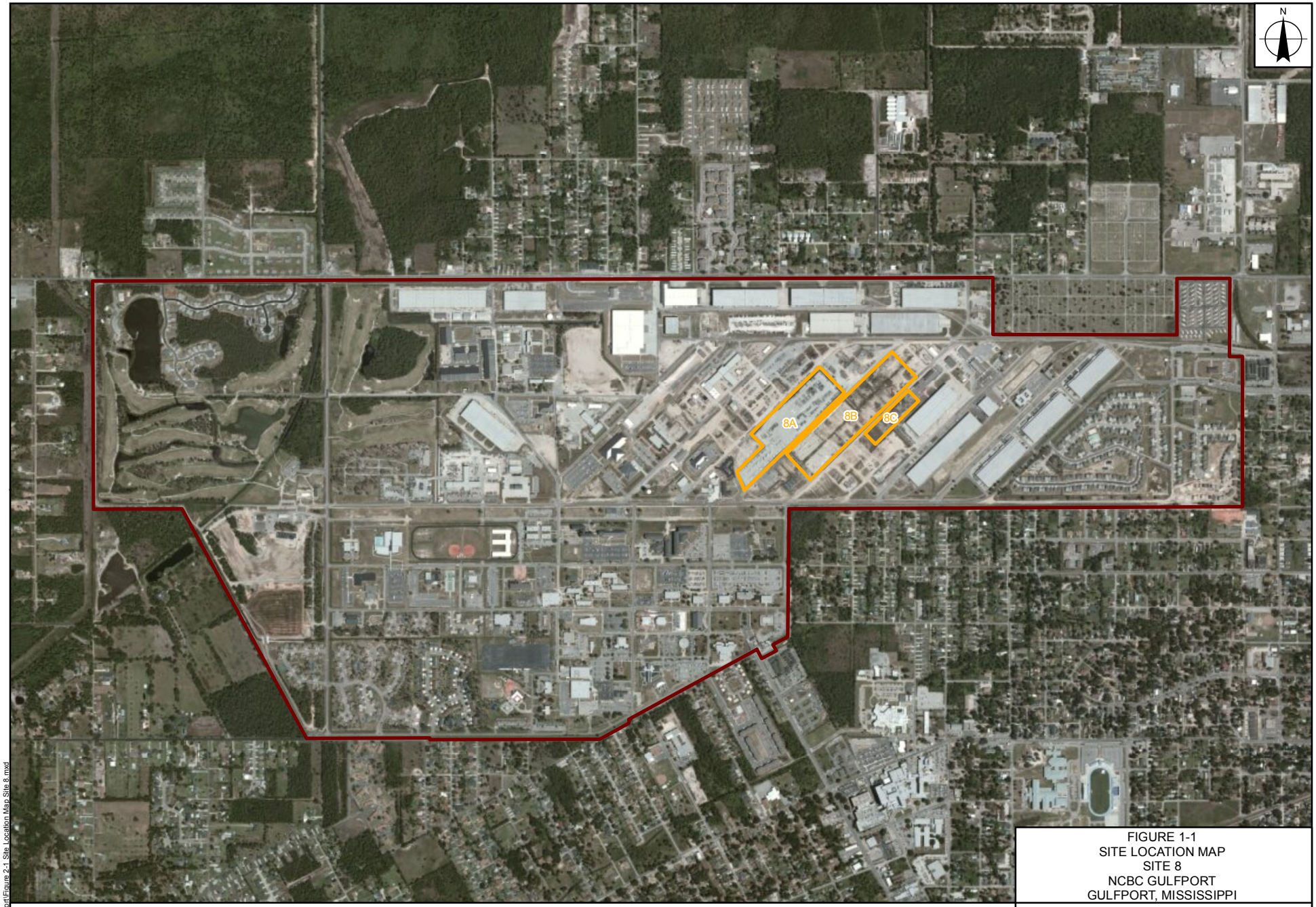

FIGURE 1-1
SITE LOCATION MAP
SITE 8
NCBC GULFPORT
GULFPORT, MISSISSIPPI

Current Site Boundary
Installation Area

0 1,500 3,000 Feet

NAVFAC Naval Facilities Engineering Command
RESOLUTION CONSULTANTS

REQUESTED BY: P. Jobmann	DATE: 2/18/2015
DRAWN BY: M. Senne	TASK ORDER NUMBER: JM70

X:\Navy\NCBC_Gulfport\Figure 2-1 Site Location Map Site 8.mxd

Service Layer Credits: Source: Esri, DigitalGlobe, GeoEye, Earthstar Geographics, CNES/Airbus DS, USDA, USGS, AEX,

Figure 1-2
Historical Soil Investigation Results
Site 8
NCBC Gulfport
Gulfport, Mississippi

Dioxin Concentration: > 1000 x TRG

Dioxin Concentration: 100 - 1000 x TRG

Dioxin Concentration: < 100 x TRG

Notes:
- Sample locations are approximate
- TRG = Target Remediation Goal
- Areas not highlighted or shaded were not sampled.

0 240 480 Feet

NAVFAC Naval Facilities Engineering Command

RESOLUTION CONSULTANTS

REQUESTED BY: D. Felter	DATE: 2/25/2015
DRAWN BY: K. Burnum	TASK ORDER NUMBER: 15282

X:\Navy\NCBC_Gulfport\Site_8_Soil_Grid.mxd

Harrison County, MS Remote-Sensing Image is from Sewall Company and downloaded through the USGS Earth Explorer; Some data are from Tetra Tech; Road names were acquired from Esri, DeLorme, HERE, USGS, Intermap, increment P Corp., NRCAN, Esri Japan, METI, Esri China (Hong Kong), Esri (Thailand), TomTom.

1.5 Initial Site Remedy — Incineration

In 1985, after onsite investigative activities conducted by the USAF, the USAF began operations to clean up the dioxin-contaminated soils that remained onsite. Soil was excavated to the then-current United States Environmental Protection Agency (U.S. EPA) criterion of 1.0 microgram per kilogram and incinerated. During test burns, two additional areas were identified as previous storage locations for drums containing HO. T he original 13 acres was subsequently designated Site 8A, and the two new areas were designated as Sites 8B and 8C (Tetra Tech 2004). Following U.S. EPA acceptance of the test burn data, full-scale incineration of dioxin-contaminated soils from Sites 8A, 8B, and 8C was conducted (Tetra Tech 2004). The incineration process included approximately 27,000 cubic yards (CY) of contaminated soil, and was completed in 1987 and 1988. The resulting 21,000 CY of ash was placed on Site 8A. The locations of the USAF excavations on Sites 8B and 8C are shown on Figure 1-3.

1.6 Stabilization Activities (2001-2007)

No remedial actions were conducted on Site 8 from 1988 to 2001. Removal actions were conducted in off-base areas in April-May 1995, November-December 2001, and April 2003. Excavated sediments from all three removal actions were staged on Site 8A for future stabilization as reported in the Proposed Plan (Tetra Tech 2001) and the Site 8 Decision Document (NAVFAC, 2004).

Bench-scale treatability, field treatability and pilot-scale studies were completed in 2000 and 2001 to determine the geotechnical and chemical characteristics of the stabilized material blend and the best methods to stabilize the sediments and ash. The findings of these studies were implemented in the removal actions that followed, and have been utilized in the stabilization activities planned by Resolution Consultants under this Work Plan. The findings of these studies are summarized in:

- Tetra Tech NUS, Inc. *Report Bench-Scale Soil/Sediment Treatability Study, Site 8 Herbicide Orange Study Area, Naval Construction Battalion Center.* Gulfport, Mississippi. March 2001.

- Tetra Tech NUS, Inc. *Report for Pilot-Scale Soil/Sediment Treatability Study, Site 8 Herbicide Orange Study Area, Naval Construction Battalion Center.* Gulfport, Mississippi. December 2001.

In August 2002, the Navy performed a sediment removal action in the drainage ditches of Sites 8B and 8C. Approximately 2,600 CY of sediments were excavated from 3,800 linear feet of drainage ditches and were transported and stabilized at Site 8A (CH2M Hill Constructors, Inc. 2003).

From 2004 to 2007, approximately 73,000 CY of material contaminated with dioxin was stabilized with Portland Type I cement at Site 8A (ECC 2007). Contaminated soil was derived from onsite sources, such as the ash, and dredged from on- and off-base drainage ditches and swamps. Afterward, Site 8A was covered with a cap and is currently used as a parking area. As a result, Site 8A is not included in the current efforts described in this work plan.

In 2008, 5,815 tons of additional contaminated soil in the form of dredge spoil piles staged next to Canal Road were excavated and stabilized on the southern part of Site 8B using 14 percent by weight of Portland cement (KEMRON, September 2008). Approximately 173 tons of other contaminated materials were also stabilized in the southern part of Site 8B at that time (KEMRON, September 2008). The area was capped and is currently used as a parking area.

1.7 Long-Term Monitoring

Long-term monitoring to assess the effectiveness of the remedial action for Site 8 includes collecting sediment samples from drainage ditches that receive runoff from Site 8.

TCDD toxicity equivalent (TEQ) concentrations were observed to increase over time. In 2013, one high result of 446 nanograms per kilogram (ng/kg) triggered the need for further action (Tetra Tech 2013). Twenty-two sediment samples were collected in the vicinity of the hot spot; results showed several other locations with TCDD TEQ concentrations above the MDEQ Tier 1 restricted soil target remediation goal (TRG) of 38.2 ng/kg (Tetra Tech 2013).

1.8 Treatability and Pilot Test Decision

The results of the additional ditch sampling culminated in the decision to conduct treatability and pilot tests that included excavating and stabilizing the drainage ditch sediments impacted with dioxins. The material to be stabilized includes sediment piles stockpiled on Site 8B from ditch maintenance activities by base personnel, and sediments that will be excavated in the future from various ditches around Sites 8B and 8C (Figures 1-4 and 1-5). In an abundance of caution and to prevent the need for future removal actions before the final remedy is implemented, sediment from sections of ditches that did not exceed the TCDD TRG, but are located between sections of ditches that did exceed the TRG goal, will be excavated and stabilized during the pilot test (see red areas on Figure 1-5). Similarly, sediments that are in the culverts between sections of contaminated ditches will be jet cleaned from the pipes and stabilized.

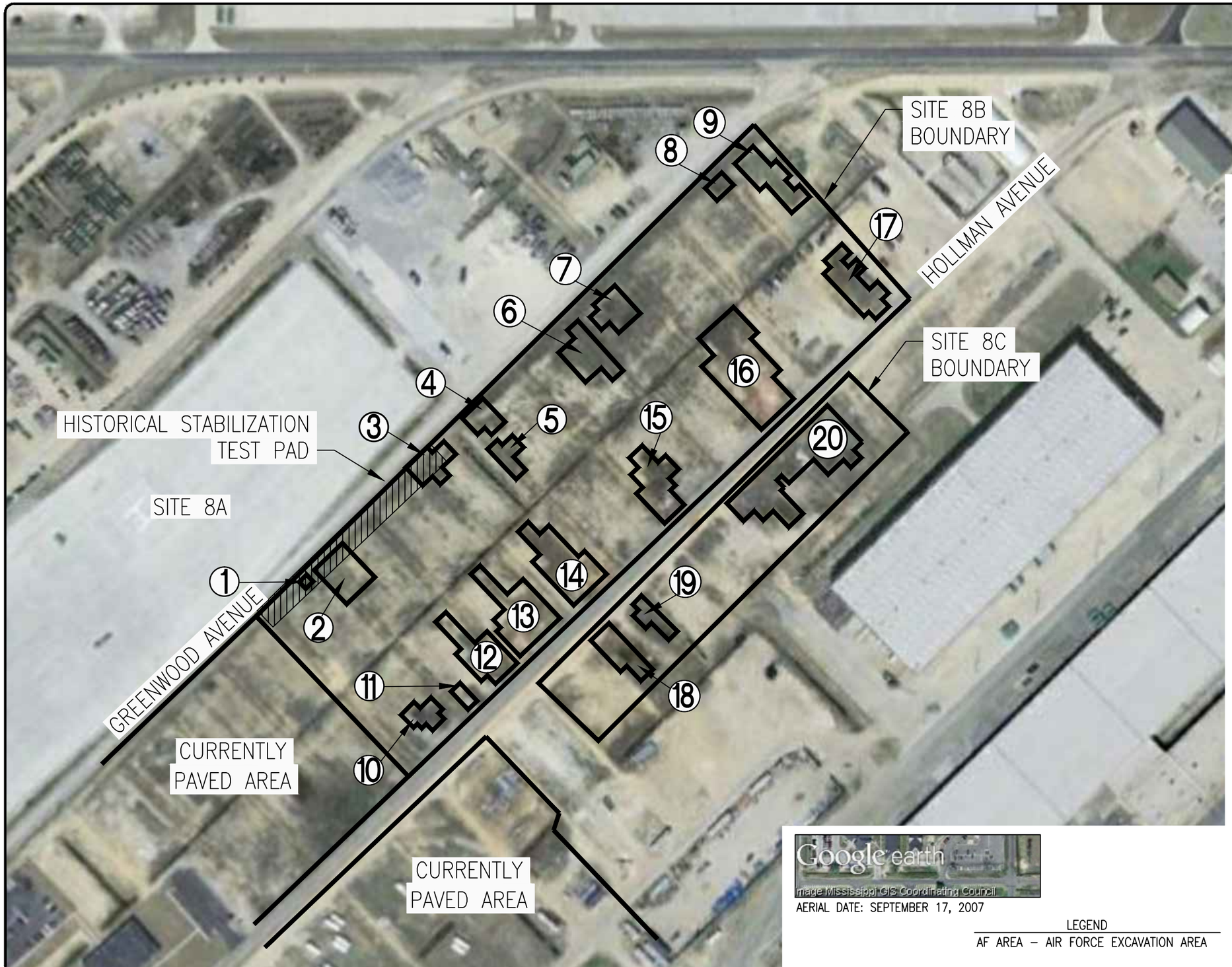

AF Area Number	Area (ft^2)
1	240
2	4,002
3	2,476
4	825
5	3,550
6	3,385
7	1,352
8	340
9	1,916
10	2,580
11	560
12	6,340
13	9,175
14	8,028
15	4,886
16	14,034
17	5,817
18	4,620
19	4,121
20	25,444

Google earth
Image Mississippi GIS Coordinating Council

AERIAL DATE: SEPTEMBER 17, 2007

LEGEND

AF AREA – AIR FORCE EXCAVATION AREA

FIGURE 1–3
AIR FORCE EXCAVATION AREAS
SITE 8
NCBC GULFPORT
GULFPORT, MISSISSIPPI

REQUESTED BY: D.FELTER	
DRAWN BY: BRONSON	
DWG DATE: 02/20/15	
DWG NO: 15339_B003	

ENSAFE
creative thinking. custom solutions.
(800) 588-7962
www.ensafe.com

\\Esdatanet\cad\CAD PROJECTS\15339 Gulfport_MS\Plans\15339_B003_EXCAVATION AREAS_MS.dwg

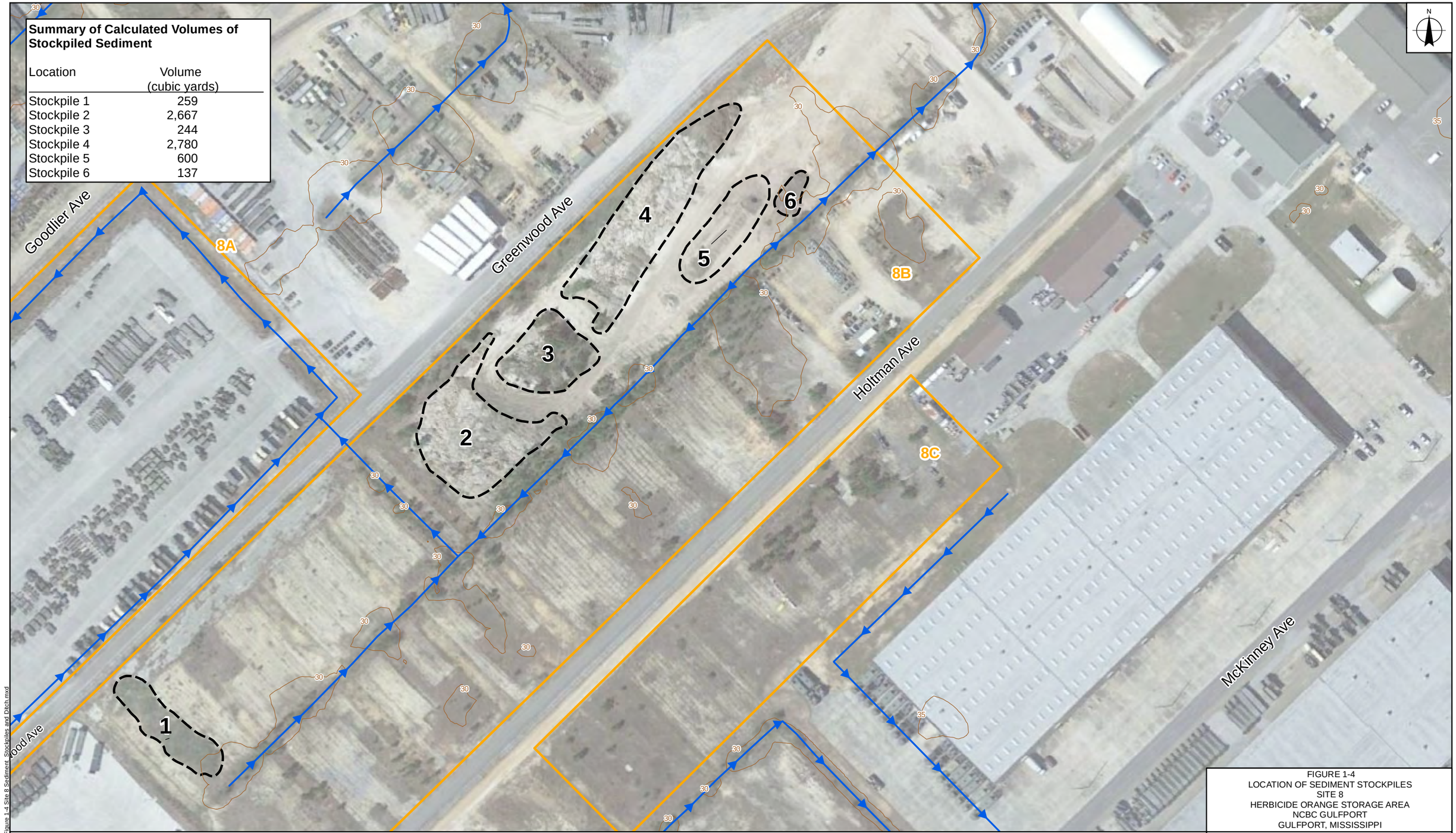

Summary of Calculated Volumes of Stockpiled Sediment

Location	Volume (cubic yards)
Stockpile 1	259
Stockpile 2	2,667
Stockpile 3	244
Stockpile 4	2,780
Stockpile 5	600
Stockpile 6	137

Ditch with Flow Direction
Elevation Contours
Stockpile
Current Site Boundary

0 120 240 Feet

FIGURE 1-4
LOCATION OF SEDIMENT STOCKPILES
SITE 8
HERBICIDE ORANGE STORAGE AREA
NCBC GULFPORT
GULFPORT, MISSISSIPPI

NAVFAC Naval Facilities Engineering Command
RESOLUTION CONSULTANTS

REQUESTED BY: P. JOBMANN	DATE: 5/27/2015
DRAWN BY: N. RINEHART	TASK ORDER NUMBER: JM70

X:\Navy\NCBC_Gulfport\Figure 1-4 Site 8 Sediment Stockpiles and Ditch.mxd

Some data are from Tetra Tech; Road names were acquired from Esri, DeLorme, HERE, USGS, Intermap, increment P Corp., NRCAN, Esri Japan, METI, Esri China (Hong Kong), Esri (Thailand), TomTom; Image is from Google Earth; Elevation contours derived from National Elevation Data - USDA/NRCS.

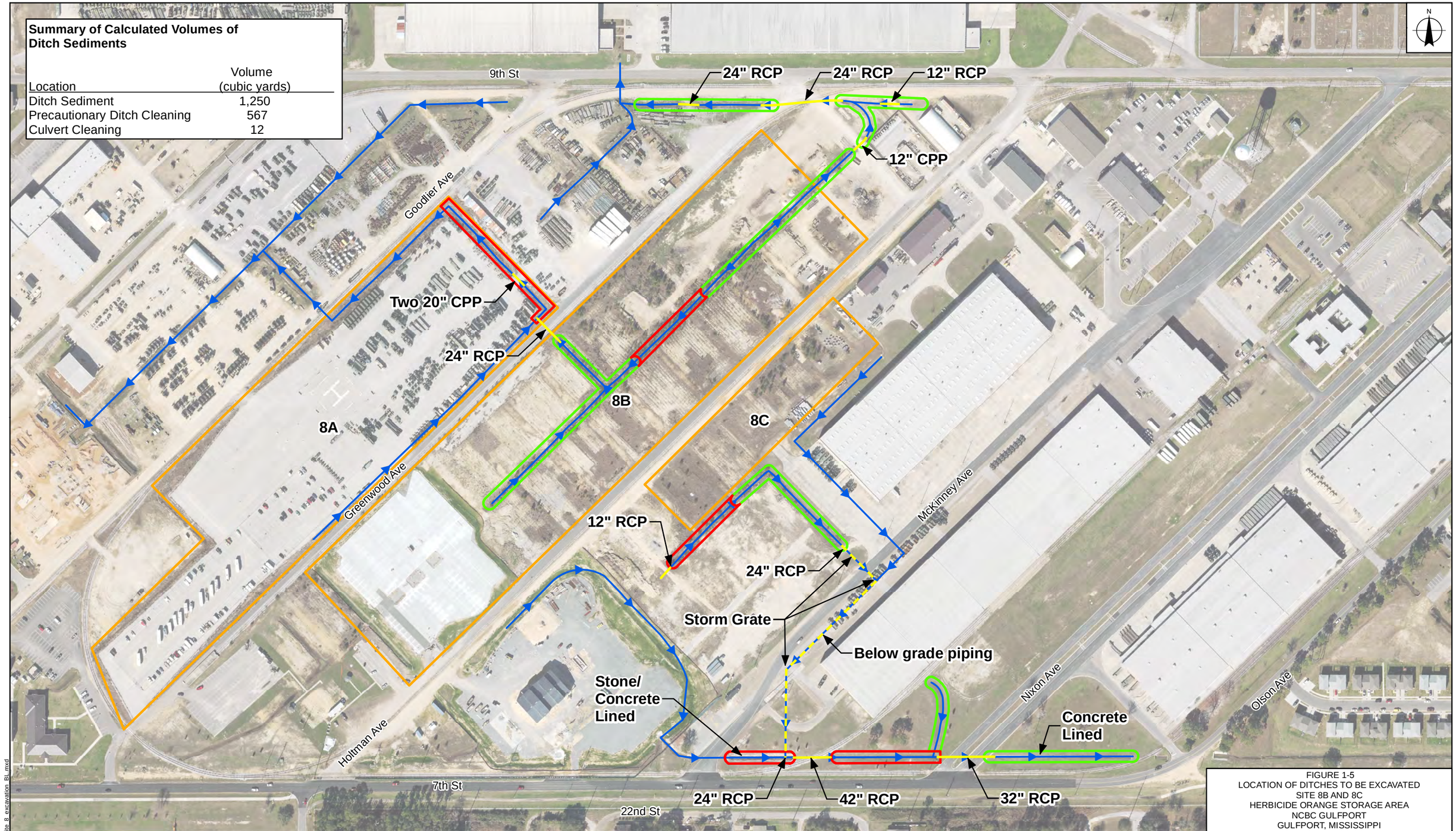

Summary of Calculated Volumes of Ditch Sediments

Location	Volume (cubic yards)
Ditch Sediment	1,250
Precautionary Ditch Cleaning	567
Culvert Cleaning	12

- Below Grade Piping
- Culvert
- Ditch with Flow Direction
- Current Site Boundary
- Ditch Excavation
- Precautionary Ditch

Notes:
- RCP = Reinforced Concrete Pipe
- CPP = Corregated Plastic Pipe
- Sections of ditch outlined in red will be excavated to remove sediment even though concentrations are below the Target Remediation Goal
- Subcontractor will jet clean all identified culverts and piping

0 240 480 Feet

FIGURE 1-5
LOCATION OF DITCHES TO BE EXCAVATED
SITE 8B AND 8C
HERBICIDE ORANGE STORAGE AREA
NCBC GULFPORT
GULFPORT, MISSISSIPPI

NAVFAC Naval Facilities Engineering Command
RESOLUTION CONSULTANTS

REQUESTED BY: P. JOBMANN	DATE: 5/27/2015
DRAWN BY: N. RINEHART	TASK ORDER NUMBER: JM70

X:\Navy\NCBC_Gulfport\Site 8 excavation BL.mxd

Harrison County, MS Remote-Sensing Image is from Sewall Company and downloaded through the USGS Earth Explorer; Some data are from Tetra Tech; Road names were acquired from Esri, DeLorme, HERE, USGS, Intermap, increment P Corp., NRCAN, Esri Japan, METI, Esri China (Hong Kong), Esri (Thailand), TomTom.

The Base Public Works Department has indicated that the ditches surrounding Site 8A require maintenance to remove vegetation and sediment that has reduced the flow capacity of the ditches. Because the ditch sediment may be contaminated with dioxins, the section on the northern portion of Site 8A will be excavated during this pilot test and the sediment stabilized on Site 8B. The section of Site 8A ditch that will be excavated is identified on Figure 1-5.

An organic-rich layer of soil has accumulated over much of Site 8B and has been shown to be impacted by dioxins. Because these soils can migrate to the ditches during storm events, the fenced area of Site 8B will be scraped, and in areas where sediment will be stabilized the existing cemented soil will be milled. The material generated from these activities will also be stabilized with Portland cement.

Samples collected from the triangle-shaped grass area southwest of the intersection of 9th Street and Holtman Avenue also contained elevated concentrations of dioxins. Because this area is a flat piece of land, not a drainage ditch, it will be addressed as part of the final remedy for the sites.

The calculated volumes of the individual stockpiles of sediment and the volume of sediments that will be excavated from the ditches around Sites 8B and 8C are summarized in Table 1-1. The volumes vary from what was presented in the Treatability Test Work Plan; the current values reflect more detailed field measurements of the stockpile volumes and the fact that a significant volume of soil was removed from Stockpile 5. The presented volumes are viewed as conservative estimates of the total volume of material that would be stabilized because the approximately 6,700 CY of sediment currently stockpiled on Site 8B is uncompacted; after compaction, the volume will likely decrease by 30 percent or more. Calculations are provided in Appendix A.

Table 1-1
Summary of Calculated Volumes of Sediment

Location	Volume (cubic yards)
Stockpile 1	259
Stockpile 2	2,667
Stockpile 3	244
Stockpile 4	2,780
Stockpile 5	600
Stockpile 6	137
Ditch Sediments	1,250
Precautionary Ditch Sediments	567
Culvert Cleaning	12
Scraping, milling, and USAF excavation cleaning	4,807
Total Volume	13,324

Note:
USAF = U.S. Air Force

1.9 Treatability Test

In January 2015, Resolution Consultants completed a treatability test on representative samples collected from the stockpiled sediment and sediment excavated from a ditch on Site 8B, to confirm that 14 percent by weight of Portland cement mixed with the sediment is sufficient to stabilize the sediment and meet the project goals. The activities completed during the test are summarized in the *Final Technical Memorandum, Sediment Stabilization Treatability Test* (Resolution Consultants, April 2015), and the results are detailed in the *Draft Final Technical Memorandum, Stabilization Treatability Test Results* (Resolution Consultants, May 2015).

Sediment aliquots were excavated from the stockpiles and ditches to generate representative samples for the treatability test. The number of aliquots collected from each source was proportional to the volume of each source. Five aliquots were collected at each sample location so that five composite samples could be generated. The aliquots were then combined on sheets of plastic generating five equal-sized composite samples, each with the same mix of source sediment. Portions of two of the five composite samples were submitted to Birmingham Engineers and Construction Consultants, Inc. (BECC) for moisture density and moisture content tests. The preliminary geotechnical tests determined that the homogenized sediment moisture content was between 11 and 12.5 percent and the optimum moisture content (OMC) to achieve maximum compaction of the amended sediment was 9.5 to 10 percent. Based on the preliminary tests, it was determined that the moisture content of the amended sediment was too high, and the OMC could not be achieved without drying the sediment.

During the treatability test, the moisture content of a mixture of sediment and 14 percent Portland cement was tested to determine if the addition of Portland cement would reduce the moisture content sufficiently to achieve the OMC of 9.5 to 10 percent moisture. The mixture only reduced the moisture content to 12.5 percent. Based on observations of the consistency of the amended sediment mixture, it was determined that the amended sediment mixture would require additional water to hydrate the Portland cement and start the curing process. The mix ratios of the treatability test were adjusted in the field to determine the percent by weight of additional water that should be mixed with the amended sediment to hydrate the cement and to make the mixture workable for compaction. The test involved adding different volumes of water to each of the five composite samples, amended with Portland cement, to increase the moisture content by approximately 1, 2, 2.5, 3.5, and 5.5 percent by weight.

Each of the five composite samples, Portland cement, and water were individually homogenized in a cement mixer. The mixtures were then placed in 2-foot by 2-foot wooden forms, in two inch lifts, and compacted using a hand tamper. The resultant pads were approximately 6 inches thick. BECC conducted moisture content and compaction tests using a nuclear density meter after the amended sediment was compacted. Core samples were collected by BECC to complete unconfined compressive strength (UCS) tests in their laboratory after 7 days of curing. The California Bearing Ratio (CBR) tests were completed in the field.

Based on the geotechnical tests completed on the stabilized sediment after 7 days of curing, the treatability test confirmed that 14 percent by weight of Portland cement mixed with the sediment is sufficient to achieve the project geotechnical and chemical goals. All five test pads significantly exceeded the CBR goal of 20 after 7 days of curing. Two of the five test pads achieved the UCS goal of at least 500 pounds per square inch (psi) after 7 days of curing, and the other three samples achieved that goal after 28 days of curing. The reason for the additional curing time is believed to be the result of the lower moisture content in the amended sediment in the three test pads. The method of compaction during the treatability test is also believed to have resulted in shearing along the joints of the lifts, which would have biased the UCS test results low. Compaction during the pilot test with vibratory rollers and/or plate compactors should address the compaction issue encountered during the treatability test.

Dioxin and Synthetic Precipitation Leaching Procedure (SPLP) analyses were conducted on the five hardened test pads to assess leachability. Total dioxins were detected in each sample; TCDD was detected at concentrations of 3.48 to 3.80 ng/kg and TEQs ranged from 6.43 to 8.07 ng/kg. However, all SPLP results were non-detect; the SPLP project goal is below 30 picograms per liter (pg/L).

Based on the results of the treatability test, it was determined that amending the sediment with 14 percent by weight Portland cement and adding water to the amended sediment at a ratio of approximately 3.5 percent by weight to achieve a ratio of approximately 15 percent moisture was sufficient to achieve the geotechnical and chemical goals and still allow the amended sediment to be mechanically compacted. The test pad that had 5.5 percent by weight of water added resulted in the mixture being too wet for mechanical compaction to be completed without the sediment becoming adhered to the tamper.

2.0 STABILIZATION PILOT TEST WORK PLAN

2.1 Objectives

A pilot test will be completed on a mixture of sediments derived from NCBC Gulfport ditch maintenance and excavation activities and clearing/grubbing/scraping Site 8B. The sediment will be stabilized on Site 8B, and will act as the base course for the final remedy, which is anticipated to be the installation of an asphalt or concrete cap for use as a parking lot or storage area. Although excavating dioxin-impacted drainage ditches affected by dioxin migration from Site 8C is included in this work plan, clearing/grubbing/scraping Site 8C is not proposed in this work plan; it is expected to be addressed in the final remedy. The objectives of the pilot test are:

- Verify that dioxin-contaminated sediment exceeding the MDEQ TRG of 38.2 ng/Kg has been removed from the drainage ditches around Site 8.

- Verify that the stabilization methodology and percent Portland evaluated during the treatability test achieves the project geotechnical and chemical goals (Table 2-1) when implemented in large scale.

Table 2-1
Summary of Project Geotechnical and Chemical Goals

Test (Method)	Project Goal
Compaction (ASTM D6938-10)	> 95 percent Proctor Density
California Bearing Ratio (ASTM D1883-07)	> 20
Unconfined Compressive Strength (ASTM D1633-00)	> 500 psi
TCDD Leachability (U.S. EPA Method 8290)	< 30 pg/L

Notes:

ASTM = American Society for Testing and Materials
psi = Pounds per square inch
TCDD = 2,3,7,8-tetrachlorodibenzo-p-dioxin
pg/L = Picograms per liter
U.S. EPA = United States Environmental Protection Agency

2.2 Project Scope

The scope of work addressed in this Work Plan includes the following activities:

- Obtaining base and site access

- Conducting utility mark-outs

- Permitting

- Mobilizing personnel, equipment, and materials/supplies
- Setting up the construction facilities, including an office trailer, sanitary facilities, truck scale, decontamination pad, etc.
- Installing and maintaining erosion, sediment, and storm water control measures
- Vegetation clearing and grubbing
- Preparing work areas (e.g., screening/mixing area, USAF excavation areas, and stabilization areas)
- Ditch excavation and confirmation sampling
- Sediment loading and transportation
- Culvert cleaning
- Sediment screening and mixing
- Preliminary geotechnical testing
- Sediment spreading
- Air Force excavation filling
- Sediment amending and mixing
- Amended sediment compaction
- Stabilized sediment geotechnical testing
- Stabilized sediment chemical testing
- Ditch restoration

- Solid waste decontamination
- Equipment decontamination
- Demobilization activities

2.3 Pilot Test Procedures

Resolution Consultants will complete a pilot test on approximately 13,000 CYs of sediment composed of a mixture of sediment derived from NCBC Gulfport ditch maintenance and excavation activities. Field activities for the planned test are described below.

2.3.1 Base and Site Access

Access to NCBC Gulfport must be coordinated with Resolution Consultants and the base Point of Contact, Mr. Gordon Crane. Copies of the current access forms are provided in Appendix B. Prior to completing the forms, Resolution Consultants will confirm that the access forms are current and will provide the Subcontractor with the up to date forms, if necessary. The Subcontractors will be required to complete the appropriate forms for a background check. The completed forms must be submitted to Mr. Gordon Crane a minimum of 3 weeks prior to mobilization.

Use of the nuclear density testing equipment by the geotechnical laboratory requires daily submittal of documentation of the equipment. Copies of the necessary paperwork are provided in Appendix C.

Sites 8B and 8C are currently enclosed by a wire fence. Access to the work area will require either locating the ends of the wire fence and disconnecting the wire from the fence posts or cutting the wire to allow the fence to be removed or rolled back. The wire fence should be temporarily connected at the end of each day's activities and should be permanently connected at the end of the pilot test to secure the area. If portions of the fence need to be removed during the work and cannot be reattached at the end of each day's work, other temporary fencing (e.g., orange construction fence) should be installed and maintained to secure the work area.

2.3.2 Utility Mark-out

Prior to mobilization, the contractor will mark out the planned excavation areas and contact Mississippi 811, Inc. (MS811) to provide notification of the work to utility companies. The MS811 locate number and the list of utilities that MS811 will contact must be submitted by the Subcontractor to Resolution Consultants. The utility mark-out will be renewed by the Subcontractor as necessary to comply with MS811 and base requirements.

The information obtained from the MS811 notification will be used to complete the NAVFAC Dig Permit described in Section 2.3.3 below.

2.3.3 Permitting

Permitting for the planned work will include the following:

- MDEQ Large Construction General Permit — Registration of the planned work will be completed under the General Permit. A Storm Water Pollution Prevention Plan (SWPPP) has been prepared, in accordance with State of Mississippi rules (MDEQ 2011 and 2013), by Resolution Consultants and is provided under a separate cover. Resolution Consultants will complete the necessary submittals to register the planned work.

- NAVFAC Public Works Department Gulfport Excavation Permit — The Subcontractor, with the assistance of Resolution Consultants, will complete the Excavation Permit applications provided in Appendix D. The permit should be completed a minimum of 3 weeks prior to subsurface work to allow MS811 to mark out the utilities and for the Public Works Department to review the application and grant the permit. Marking out the excavation areas, contacting MS811 for utility mark-out, and communication with base personnel may be an iterative process to ensure the underground utilities are properly located and that the work will not interfere with the utilities.

2.3.4 Mobilization

Mobilization of personnel, equipment, and materials/supplies should not be initiated until the Navy has authorized base access, permitting requirements have been completed, and Resolution Consultants has agreed to the construction schedule. Unless the employees of the Subcontractor(s) obtain RAPIDGate passes through Eid Passport, Inc., all employees will be required to check in at the Pass and ID office at the Pass Road gate daily, and will be required to enter the Base through the Commercial Entrance on 28th Street. Delays should be expected during entrance to the Base to allow the inspection of all vehicles.

No weapons or contraband are allowed on base.

2.3.5 Construction Facilities

The Subcontractor will supply and set up the construction facilities on the northwestern corner of Site 8B (or an agreed upon location) at the start of the project. The planned facilities should be set up as shown on the Site Plan in Section 5.0 of this Work Plan. The facilities will include:

- Office trailer — minimum 8 feet by 10 feet in size.
- Sanitary facilities — one facility for every 20 workers for a 40-hour work week and service according to the American National Standards Institute (ANSI) recommended service schedule. [1,2]
- Temporary water connection — an approved backflow preventer and flow meter for connecting to a fire hydrant for water during the work. Locations of fire hydrants are shown on the Site Plan, included in Section 5.0 of this Work Plan.
- Temporary electric — ultra-silent generator to power the office trailer and the portable geotechnical laboratory. The estimated power requirement is 9 to 11 kilowatts. Fuel to be provided throughout the use of the generator by the Subcontractor.
- Frac tanks — Subcontractor will supply a minimum of two 20,000-gallon frac tanks for the storage of decontamination water. The frac tanks should be cleaned periodically of accumulated fine sediment so the sediment can be stabilized with other material and will not have to be disposed of off-base. The frac tanks should be located within the decontamination area identified on the Site Plan in Section 5.0.
- Decontamination pad — an appropriately sized decontamination pad (Hydro Engineering, Inc., Hydropad portable wash pad [or approved equivalent]) will be set up to clean potentially dioxin-contaminated sediment from equipment and waste materials.
- General waste dumpster — an eight cubic yard dumpster for general non-contaminated household-type waste. At a minimum, the dumpster should be emptied once per week, but the frequency may be reduced by Resolution Consultants. The dumpster should be located outside of Site 8B to avoid the need to decontaminate the waste collection vehicle.

[1] Per 29 CFR 1926.51(c)(1) Table D-1 Sanitation.
[2] ANSI Z4.3-1995 Revised 2005, Section 3 (For Sanitation — Nonsewered Waste-Disposal Systems — Minimum Requirements).

- Truck scale — a truck scale will be set up along the truck route between the mixing/screening area and the stabilization areas to measure the tons of sediment that have been stabilized.

- Miscellaneous items — flammable materials storage cabinet (if materials will be stored on site), spill kit, fuel storage tank(s), etc.

2.3.6 Erosion, Sedimentation, and Storm Water Control Measures

The Subcontractor must install and maintain the erosion, sedimentation, and storm water control measures identified in the *Storm Water Pollution Prevention Plan* (Resolution Consultants, May 2015). These measures include but are not limited to:

- Silt fence (minimum 3-foot wide fabric) along ditches and selected edges of Site 8B
- Sediment traps at the furthest downstream sections of ditches
- Plastic covers over stockpiles
- Construction entrance(s)

If a precipitation event that may result in difficult work conditions is forecast, the erosion, sedimentation, and storm water control measures will be strengthened to prevent transport of dioxin-impacted material to the ditches. Post stabilization erosion control is discussed further in Section 2.3.25.

2.3.7 Vegetation Clearing

The Subcontractor will clear the above grade portion of vegetation within Site 8B and all ditch segments expected to be excavated. The vegetation will be stockpiled in the northwest portion of Site 8B (or at an agreed upon location). Care should be taken to prevent the inclusion of the below grade portion of vegetation, which may have dioxin-contaminated soil adhered to the roots. The Subcontractor will also rake the pine needles that have accumulated along the ditches to prevent them from being included in sediment being excavated from the ditches. The Subcontractor will chip the vegetation to reduce the volume of the material, and the material will be loaded into roll-off container(s) for off-base disposal as non-hazardous waste at an approved Resource Conservation and Recovery Act (RCRA) Subtitle D landfill.

2.3.8 Grubbing

The Subcontractor will grub the below grade roots of all vegetation and stockpile the roots in the northwest portion of Site 8B for decontamination, chipping (if necessary), and eventual disposal as

non-hazardous waste at a RCRA Subtitle D landfill. Grubbing should be completed within and along the banks of the drainage ditches to be excavated, within the USAF excavation areas, on the stockpiled sediment, and throughout the fenced area of Site 8B.

In areas where the vegetation is limited to short grasses, the Subcontractor will be required to use a heavy-duty disc harrow on the soil to break up the shallow roots. The disced soil will be processed through a soil screener with a wire screen cloth with ¼-inch openings to remove as much plant material from the soil as possible. Dust monitoring and suppression may be deemed necessary by Resolution Consultants based on field observations. If necessary, the Subcontractor will spray water during the grubbing activities to reduce dust. Excessive watering should be minimized to prevent the soil from being saturated.

For areas vegetated with brush or trees, such as USAF excavation areas, stockpiles sediment piles, and the ditches, the roots should be removed with either a root rake (for small, shallow roots) or an excavator. Grubbing activities in and along the ditches should be completed at the same time as the ditch excavation activities. Completing the grubbing and excavation activities at the same time will reduce the length of time the soil along the ditches will be disturbed and subject to erosion. The root balls will be processed during the screening operations described in Section 2.3.13 to remove soil adhered to the roots.

Following the screening activities, additional decontamination of the roots using pressurized water will be necessary to remove potentially dioxin-contaminated soil. Decontamination procedures are described in Section 2.3.21. Following decontamination, the Subcontractor will chip the vegetation to reduce the volume, and the material will be spread in the designated area on Site 8C and covered to prevent wind erosion of the material.

2.3.9 Preparation of Work Areas

The Subcontractor will prepare the work areas identified on the Site Plan in Section 5.0. Site preparation will include the following:

- Scraping the loose soil from the work areas and milling the upper three inches of cemented soil. Milling the cemented soil should be completed using a Caterpillar RM-300 Rotary Mixer (or approved alternative) with a milling rotor. The milling rotor should be set to a maximum depth of three inches. Material generated during this process will be moved to the screening/mixing area for stabilization. Similar to the grubbing process described above, dust suppression should be included in this process.

- Leveling the soil in the USAF excavations and compacting the material with a vibratory plate compactor to create a competent base for the stabilized sediment.

- If areas other than USAF excavation areas are found that are not covered with cemented soil, they will be compacted with a vibratory roller or compactor.

2.3.10 Ditch Excavation and Confirmation Sampling

The Subcontractor will excavate the dioxin-contaminated sediment from the sections of ditch identified on Figure 1-5. Excavation of the ditches will be completed using a rubber wheeled excavator to minimize disturbance of the existing cemented soil at Sites 8B and 8C. The excavator should be fitted with a ditch cleaning bucket with no teeth. The bucket should be a minimum of 48-inches wide and ¾ CY in capacity. Where the ditch is lined with concrete or other hard material along 7th Street, care should be taken to prevent damage to the hardscape when removing the sediment. The removal of sediment may require the use of a vacuum truck in these sections of ditch.

Resolution Consultants will make the determination on when to discontinue excavation activities based on the color of the material being excavated. It is assumed that the dioxins have concentrated in the organic material in the sediments. When the color of the sediments changes from dark brown or black to a lighter brown or tan, the excavation activities will be discontinued and confirmation sampling will be initiated. The depth of excavation is estimated to be between 4 to 12 inches and will extend from the high water line on one side of the ditch to the high water line on the other side of the ditch. The need to excavate deeper will be based on confirmation sample results described below.

When standing water is present in the ditches, the ditches will be excavated in sections. Prior to excavation, the flow of surface water in the drainage ditch will be obstructed by damming the ends of each section with interlocking vinyl sheet piling. The maximum section of ditch that will be dammed should not exceed 40 feet in length. The pieces of vinyl sheet piling will be driven in by hand or with assistance from an excavator to a depth of at least 24 inches. The piling may need to be driven deeper than 24 inches if the excavation of sediment will be greater than 12 inches deep. Water within the section to be excavated will be pumped with a trash pump to a downstream ditch segment and the water on the upstream side of the dammed section will be pumped to a downstream section of ditch. If the water being pumped contains a significant volume of sediment (to be determined based on visual observations by the Resolution Consultants), it will be pumped to frac tanks or to an intermediate water truck to transport the water back to the

frac tanks to allow the solids to settle and the water will be decanted and either used to hydrate the amended sediments during stabilization or characterized, then discharged to the ditches. Water pumped from the frac tanks to the ditches or another permeable area on Sites 8B or 8C will be pumped through sediment filtration bags to capture any sediment that is entrained in the water.

The Subcontractor will be required to plug the culverts with inflatable pipe plugs at drainage ditches that will be excavated to prevent the flow of water through the culverts. To prevent the sections of ditches from overflowing with water because the culverts are plugged, the Subcontractor will be required to pump water from areas upstream of the plugged culverts to divert the water to different section of ditch. Locations, dimensions, and construction materials of the culverts are identified on Figure 1-5.

Resolution Consultants will collect confirmation samples according to the approved *Draft Final Sampling and Analysis Plan* (SAP) (Resolution Consultants 2014). Samp les will be collected from the excavated ditches at a frequency of one sample every 30 linear feet of ditch at the locations identified on Figure 2-1. Samples will not be collected from concrete lined ditches because it is assumed that all of the sediment will be removed from the ditch leaving no sediment to be sampled. The samples will be analyzed by Cape Fear Analytical in Wilmington, North Carolina for TCDD and tetrachlorodibenzofuran (TCDF) isomers by U.S. EPA Method 8290, using a standard turnaround time of 21 days. If the sample exceeds the MDEQ Tier 1 Unrestricted Soil TRG of 38.2 ng/kg, excavation of additional sediment and subsequent confirmation sampling will be required. An iterative process of excavation and confirmation sampling will be completed until results are below the TRG. If the samples are below the TRG, the ditches can be restored according to Section 2.3.21.

Silt fence should be replaced or installed immediately following the excavation activities and should be maintained throughout the project.

2.3.11 Sediment Loading and Transportation

The excavated sediment will be placed in dump trucks with gasketed tail gates to prevent water from draining when the sediment is being transported to the screening/mixing area. Plastic will be placed adjacent to the trucks being loaded to catch any sediment that falls on the ground during loading. Any sediment that falls on the plastic will be placed into the truck.

The Site Plan provided in Section 5.0 identifies the truck routes for work within and outside of Sites 8B and 8C. The drivers should follow the identified routes unless they are changed by Resolution Consultants.

The tires of trucks and equipment leaving Site 8B must be cleaned in the decontamination pad prior to exiting the site according to the procedures in Section 2.3.23.

2.3.12 Culvert Cleaning

Because contaminated sediment has been identified in ditches on both sides of several of the below-grade culverts in Sites 8B and 8C, it is assumed that the culverts will contain dioxin-contaminated sediment as well. T o prevent future mobilization of dioxin-contaminated sediment from the culverts, the Subcontractor will be required to jet clean the culverts using pressurized water from a US Jetting 4018 4,000 psi, 300 gallon jetting machine (or approved equivalent). The cleaning process should be completed so that the sediments are captured with temporary sediment retention traps and then excavated/vacuumed from the ditch for transport to the screening/mixing area. Water for the jet cleaning equipment will be obtained from the hydrants located near Site 8B.

The Subcontractor will be required to run a video inspection of the pipes using a crawler video camera (Inuktun Versatrax 100 [available for rent from Pine Environmental Services LLC] or approved equivalent) in the presence of Resolution Consultants to confirm that the culverts have been sufficiently cleaned of sediment. If necessary, the Subcontractor may be required to complete additional jet cleaning and video inspections until the culverts have been cleaned.

The section of below-grade piping along McKinney Avenue connecting the ditch on Site 8C and the drainage ditch along 7th street (identified on Figure 1-5) may require confined space entry to facilitate cleaning of the pipe. If entry into a confined space is necessary, the Subcontractor will be required to supply all equipment and personnel and complete any entry permits to enter the confined space. This section of culvert should be cleaned from both ends of the pipe to ensure the sediment has been removed.

2.3.13 Sediment Screening and Mixing

The excavated and stockpiled sediment will be mechanically screened by the Subcontractor with a Screen Machine Industries Spyder 512T Tracked Screening Plant (or approved alternative) to remove organic material and other material (e.g., concrete, golf balls, etc.) larger than ¾ of an inch. Material removed from the sediment by the screening plant will be staged for decontamination and reused onsite as fill material, recycled, or disposed off-base. Material to be reused onsite as fill material will be crushed to a maximum size of 8 inches in diameter. Characterization and profiling of solid waste being disposed will be necessary to determine the appropriate disposal facility.

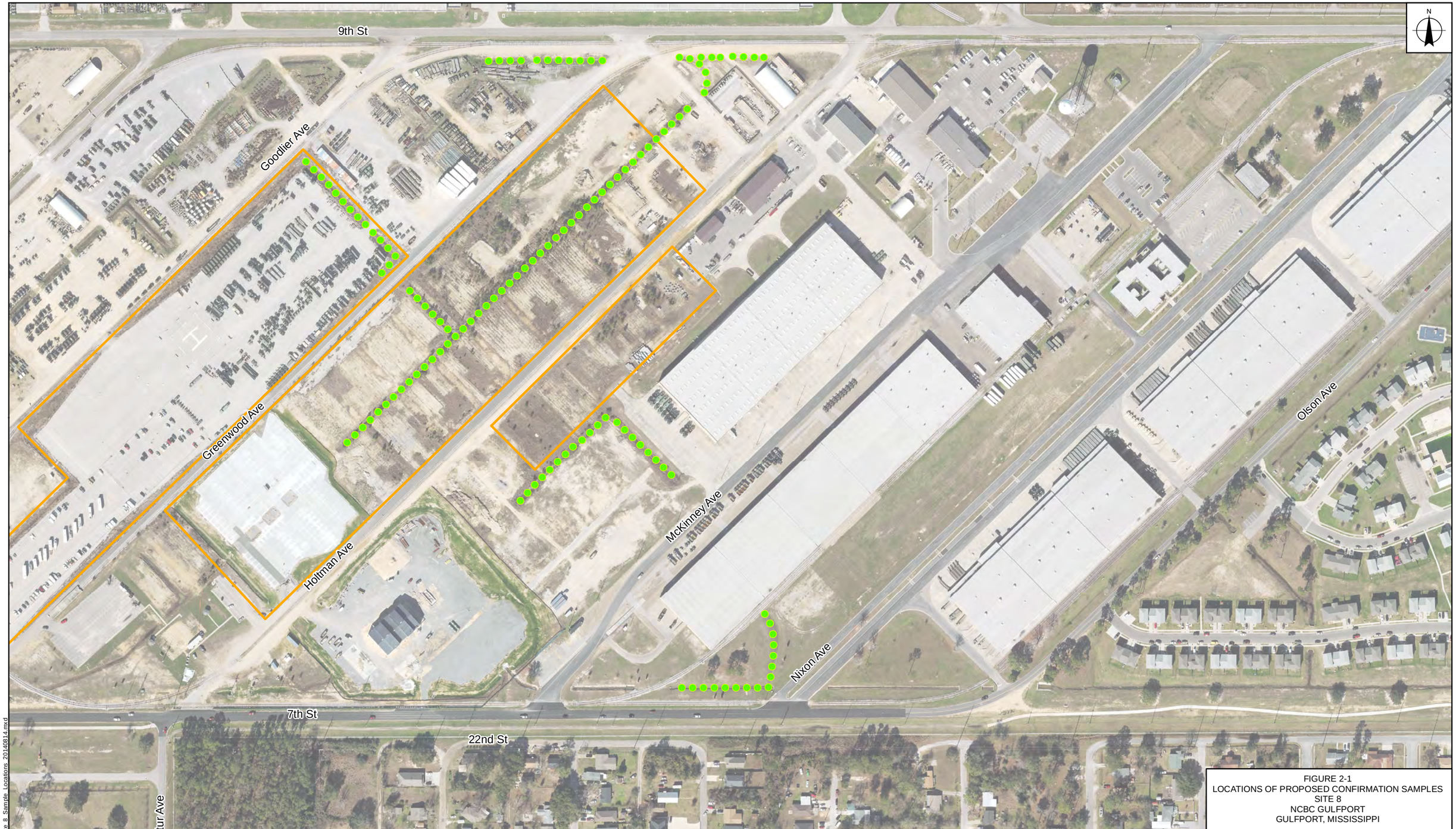

FIGURE 2-1
LOCATIONS OF PROPOSED CONFIRMATION SAMPLES
SITE 8
NCBC GULFPORT
GULFPORT, MISSISSIPPI

Legend

- 30 ft. Interval Sample Point (Sampling locations are approximate.)
- Current Site Boundary

0 250 500 Feet

NAVFAC Naval Facilities Engineering Command

RESOLUTION CONSULTANTS

REQUESTED BY: P. JOBMANN	DATE: 5/27/2015
DRAWN BY: N. RINEHART	TASK ORDER NUMBER: JM70

X:\Navy\NCBC_Gulfport\Site 8_Sample Locations_20140814.mxd

Harrison County, MS Remote-Sensing Image is from Sewall Company and downloaded through the USGS Earth Explorer; Some data are from Tetra Tech; Road names were acquired from Esri, DeLorme, HERE, USGS, Intermap, increment P Corp., NRCAN, Esri Japan, METI, Esri China (Hong Kong), Esri (Thailand), TomTom.

Material being screened should be generated from the sediment stockpiles, at ratios based on each pile's volume, to homogenize the sediment from all sources. This will require additional time moving between stockpiles, but is necessary to homogenize the material.

Dust suppression may be necessary during this phase of work. The Subcontractor and Resolution Consultants will determine the appropriate rate of water application to prevent the sediment from being too wet for amending and compacting. If too much water is added, the spreading of sediment may be delayed until the moisture content has reduced to appropriate levels.

2.3.14 Preliminary Geotechnical and Moisture Testing

BECC, a certified materials testing laboratory in Birmingham, Alabama, has been retained to perform preliminary geotechnical and moisture testing on sediment samples. BECC will provide and set up a temporary portable laboratory to complete the tests. Periodically during sediment mixing operations, BECC will collect sediment samples at a frequency of one sample for every 1,000 CY of sediment (total of 10 samples) to determine the moisture content by American Society for Testing and Materials (ASTM) D2216-10, and the moisture-density relationship by ASTM D558-11 of the mixed sediment amended with Portland cement. Analyses performed by the materials testing laboratory are shown in Table 2-2. Copies of the ASTM standards are included in Appendix E.

Table 2-2
Materials Testing Laboratory — Preliminary Analyses

Analysis	ASTM Method	Number of Samples	Comment
Moisture	ASTM D2216-10	10	100 grams per sample
Moisture Density Analysis	ASTM D558-11	10	45 kg of sediment and 18 kg of Portland cement

Notes:
ASTM = American Society for Testing and Materials
kg = kilogram

BECC will be directed to amend the sediment with 14 percent by dry weight of the Portland cement immediately prior to conducting the moisture density analyses. The moisture density tests should not be completed on amended sediments that have cured.

BECC will also periodically collect samples during sediment mixing and spreading to conduct moisture content tests. The frequency of these tests will be determined by Resolution Consultants and BECC, and would primarily be completed following a precipitation event or if dust suppression

activities add too much water to the sediment. The results of these tests would determine if the sediment can be amended or if the sediment should be allowed to dry before adding the Portland cement.

2.3.15 Sediment Spreading

The Subcontractor will transport, spread, and level the screened and mixed sediment in lifts within the stabilization areas identified on the Site Plan in attached in Section 5.0 of this Work Plan. Trucks transporting sediment from the mixing/screening area to the stabilization areas will travel across a truck scale to allow Resolution Consultants to track the weight of sediment that is being stabilized. Transport of sediment for spreading should be completed within Site 8B to avoid tracking dioxin-contaminated sediment on base roads. There is sufficient space within Site 8B to allow sediment transport on the routes identified on the Site Plan in Section 5.0.

Stabilization of sediment should be started in the historical USAF excavations first to allow the stabilized sediment to cure for a minimum of 7 days, or until the UCS test achieves 500 psi, before additional stabilized sediment is placed on top of the first lift.

2.3.16 Air Force Excavation Stabilization

Where possible, the crushed construction debris generated during the screening activities will be used as fill material in the historical USAF excavation. The material should be spread in the excavation and compacted to remove void space. If the USAF excavation cannot be completely filled with crushed construction debris, stabilized sediment will be used to fill the remaining excavations.

Sediment to be stabilized in the USAF excavations should be stockpiled adjacent to the excavation areas where the material can be amended and mixed with Portland cement.

The sediment should be spread out on the cemented soil, amended with sediment, mixed, and hydrated with water according to the process outlined in Section 2.3.17 (or agreed upon alternative method). Immediately after the sediment is hydrated, the material should be placed or pushed into the USAF excavations, where it will be spread in a maximum 12-inch thick lift and compacted with a vibratory plate compactor capable of compacting a 12-inch lift. The lift should not be thicker than the compaction capability of the compactor.

Multiple lifts may be necessary in some excavations to bring the grade up to that of the surrounding cemented soil. Sequencing the spreading and stabilization activities in the historical USAF excavations that are deeper than 12 inches should be planned to allow the first lift to cure for a minimum of 7 days, or until the UCS test achieves 500 psi, before a second lift is spread.

2.3.17 Amending Sediment and Mixing

After the historical USAF excavations are filled, the Subcontractor will spread and level the sediment on the stabilization area farthest from the screening/mixing area and can proceed systematically back towards the screening/mixing area. The final thickness of stabilized sediment lift is expected to be an average of ten inches. To ensure drainage of storm water after the pilot test is complete, the final compacted thickness of the stabilized sediment should be sloped so that the portion of the lift furthest from the drainage ditch is 12 inches thick and the portion closest to the drainage ditches is 8 inches thick. Surveying equipment, laser levels, or other means should be used to ensure the sediment is properly sloped towards the ditch. Where an existing elongated pad of stabilized sediment is located on the far western side of Site 8B, the stabilized sediment will be "feathered" into that pad to achieve a smooth transition between the existing and new pad.

Dust suppression may be necessary during this phase or work. The Subcontractor and Resolution Consultants will determine the appropriate rate of water application to prevent the sediment from being too wet for amending and compacting. If too much water is added, the addition of Portland cement may be delayed until the moisture content has reduced to appropriate levels.

The Subcontractor will amend the sediment with 14 percent by dry weight of Type I Portland cement by spreading bulk Portland cement across the area to be stabilized with a Stoltzfus spreader (or approved equivalent). The thickness of the cement layer spread on the sediment will be measured by Resolution Consultants prior to mixing to ensure the appropriate amount of Portland has been applied.

The Subcontractor will mix the Portland cement into the sediment with a Caterpillar RM-300 Rotary Mixer (or approved alternative) with a soil stabilization rotor. The rotor should be set to a depth so the sediment and Portland cement are mixed and the cemented soil beneath the sediment is not pulverized by the rotor.

The amended sediment will then be hydrated at a rate based on the preliminary geotechnical tests and visual observations. The primary source of water for hydrating the amended sediment will be generated from the frac tanks used to store ditch water and decontamination water. When additional water is needed, the water will be generated from the base fire hydrants near Site 8B. The locations of fire hydrants in close proximity to Site 8B are identified on the Site Plan attached in Section 5.0 of this Work Plan.

The rate of mixing and hydrating the sediment should not allow the sediment to be mixed/hydrated for more than 10 minutes before being compacted.

Resolution Consultants will monitor the weather forecast during the spreading, amending, and compaction phases of work to assess the potential for precipitation events that may contribute excess moisture to the sediment, which could make the amended sediment unworkable. The Subcontractor will be directed to delay amending sediment until the threat of precipitation has subsided.

2.3.18 Compaction

Immediately following the mixing process, the Subcontractor will compact the sediment with a Caterpillar CB34B XW Tandem Vibratory Roller (or approved alternative) to achieve a compaction rating of 95 percent of the Proctor density. Historical pilot test findings concluded that one to three passes of a smooth drum vibratory roller was sufficient to compact the sediment, depending on the moisture content. The Subcontractor should assume that three passes with the roller will be required to achieve the compaction goal. Based on field compaction test results, Resolution Consultants will notify the Subcontractor if fewer passes of the roller can be completed.

BECC will be completing field compaction tests according to ASTM D6938-10 during the compaction activities to determine if the sediment is compacted to a minimum of 95 p ercent of the Proctor density. If the sediment is not compacted to a minimum of 95 percent of the Proctor density, additional compaction will be necessary to achieve the necessary compaction goal. Compaction tests will be completed at a minimum frequency of one test for every 2,500 square feet of stabilized sediment, but may be completed more often early in the project and/or if there is a change in the moisture content of the sediment resulting from a precipitation event. Resolution Consultants will determine the frequency of the compaction tests.

Quality control (QC) tests to confirm the accuracy of the field density tests of the compacted sediment will be conducted according to ASTM Standard D7263-09. The QC tests will be completed once per week.

2.3.19 Stabilized Sediment Geotechnical Testing

BECC will perform two geotechnical tests to assess the compressive strength of the stabilized sediment at a minimum frequency of one sample for every 10,000 square feet of stabilized sediment. Samples of the stabilized sediment will be collected by BECC using manual coring equipment for the UCS test. The samples will be analyzed according to ASTM standard D1633-00 after 7 days of curing. BECC will also conduct field CBR tests after 7 days of curing according to ASTM Standard D1883-07. Table 2-3 summarizes required geotechnical tests.

Table 2-3
Materials Testing Laboratory — Geotechnical Analyses

Analysis	ASTM Method	Number of Samples (frequency)	Comment
California Bearing Ratio	ASTM D1883-07	100 (1 per 10,000 sq. ft.)	After 7 days of curing
Unconfined Compressive Strength	ASTM D1633-00	100 (1 per 10,000 sq. ft.)	After 7 days of curing

Notes:
ASTM = American Society for Testing and Materials
sq. ft. = Square feet

The project geotechnical goals are expected to be achieved within 7 curing days; however, if the CBR and UCS tests do not achieve the project goals after 7 days, the tests will be completed again after 28 days of curing, which should be sufficient time to achieve the project goals.

While not anticipated based on the treatability test results, if the CBR and/or UCS tests do not achieve the project goals, the project team will determine the necessary changes to the stabilization process to meet the project goals.

2.3.20 Stabilized Sediment Chemical Testing

Resolution Consultants will allow the stabilized sediment to cure for 7 days and then will collect sufficient samples of stabilized sediment for chemical testing according to the approved SAP (Resolution Consultants 2014). After cleaning the sample area with deionized water, samples of stabilized sediment will be collected with a concrete core machine or similar device. Stabilized sediment cores will be placed in a plastic bag and crushed with a hammer until the average chip size is approximately 1 inch in size. During chipping, a full face shield, long sleeve shirt, and gloves will be worn. Stabilized sediment chips will then be transferred to

laboratory-supplied sample containers. The chipped samples will be analyzed for dioxin leachability by Cape Fear Analytical using the SPLP extraction method (U.S. EPA Method 1312) and analyzing the leachate for dioxins by U.S. EPA Method 8290. The SPLP results will be compared to the MDEQ Tier 1 TCDD groundwater TRG of 30 pg/L.

If the chemical test results do not achieve the project goals, the project team will determine the necessary changes to the stabilization process to meet the project goals.

2.3.21 Ditch Restoration

Resolution Consultants will notify the Subcontractor when the drainage ditch confirmation samples meet the project goals. The Subcontractor will then be required to restore the drainage ditches. Restoration will consist of filling any areas in the ditches to return the direction of flow to preconstruction conditions and to prevent undermining of culvert then seeding the banks of the ditches with State-certified Bermuda grass seed and covering the seeded areas with straw erosion control mats. Preparation of the seed bed and seeding should be completed according to the Chapter 4, Permanent Seeding in the MDEQ *Handbook for Erosion Control, Sediment Control and Storm Water Management on Construction Sites and Urban Areas*, Volume 1 Erosion and Sediment Control Practices (MDEQ 2011).

2.3.22 Waste Decontamination

The Subcontractor will decontaminate all waste material (e.g., root balls, concrete, rocks, golf balls, etc.) separated from the sediment during grubbing and screening operations. The waste should be washed with water to remove any adhered soil/sediment. Following decontamination, the Subcontractor will reuse construction debris material (e.g., concrete, rocks, etc.) as backfill in the historical USAF excavations and place metal in the on-Base recycling dumpsters. Above-grade organic waste will be chipped and transported off base for disposal. Below-grade organic waste (e.g., root balls) will be chipped, placed in the designated area on Site 8C, and covered to prevent wind erosion of the material. Any remaining material will be containerized in 55-gallon drums and characterized for potential off-base disposal. For waste, use the following steps for decontamination:

1. Remove majority of visible gross contamination
2. Wash waste in with a pressure washer
3. Visually inspect for remaining contamination
4. Repeat washing as necessary based on visual inspection

Following decontamination, the waste will be stored for reuse, recycling, or disposal. If potentially contaminated sediment cannot be easily cleaned from the waste, the waste will be segregated and either decontaminated using another approved method or sampled for disposal.

2.3.23 Equipment Decontamination

The Subcontractor will decontaminate equipment prior to demobilization as well as when equipment will be traveling outside of the Site 8B boundary. Temporary decontamination stations will be set up when excavating sediment from ditches outside of the Site 8B boundary. During the transport of sediment from ditches located outside the Site 8B boundary, the wheels of all trucks must be decontaminated after the truck dumps the sediment within the screening/mixing area. Prior to demobilizing equipment, the Subcontractor will decontaminate the equipment in the decontamination pad. For equipment, use the following steps for decontamination:

1. Remove majority of visible gross contamination
2. Wash equipment in decontamination solution with a scrub brush and/or pressure washer
3. Visually inspect for remaining contamination
4. Repeat washing as necessary based on visual inspection

All decontaminated equipment will be visually inspected for contamination before leaving Site 8B, such as soil or sediment left on the equipment. All equipment with visible signs of contamination will be re-decontaminated until clean.

2.3.24 Decontamination and Ditch Diversion Water

Water generated during decontamination activities and dewatering of sections of ditch will be pumped to the frac tanks and used to hydrate the Portland cement amended sediment. Any water remaining at the end of stabilization activities will be sampled, and based on the analytical results, will be discharged to the ground. Fine sediment that settles out of the water into the frac tanks will be collected and stabilized with other material or as a separate pad at the end of the project. If water is to be discharged to the ground, the water will be pumped into a sediment filtration bag to capture any sediment that may be in the water.

2.3.25 Post Stabilization Erosion Control

In an effort to prevent dioxin-contaminated sediment from washing into the drainage ditches, which may require excavation before the final remedy is implemented, the Subcontractor will be required to install new 42-inch wide chain link fence backed silt fence (i.e., super silt fence) a minimum of 8-inches in the ground along the edges of all of the drainage ditches that were cleaned out during the pilot test. The silt fence installation will be completed as part of project closeout.

The silt fence will be inspected by Resolution Consultants a minimum of once per month and following any precipitation events that may result in damage to the silt fence. If necessary, the silt fence will be re-established or replaced by Resolution Consultants until the final remedy is implemented.

2.4 Demobilization

Following the final inspection described in Section 3.5.4 of this Work Plan, the Subcontractor will demobilize all equipment, materials, and construction facilities from the Base. If not already completed, all waste will be transported and disposed unless analytical results have not been received.

The fence surrounding Sites 8B and 8C, if it was taken down during the work, must be restored to the condition it was in when work was started. If the fence cannot be restored, the Subcontractor will be required to replace the fence and fence posts to properly secure the sites.

2.5 Reporting

Upon completion of field and laboratory testing activities, a Pilot Test Completion Report will be prepared and will include the following elements:

- Description of the pilot testing procedures
- Presentation of the pilot test results, including field measurements and observations and geotechnical and leachability laboratory data
- Pilot study conclusions and recommendations

3.0 CONSTRUCTION QUALITY CONTROL PLAN

This QCP is an outline of the procedures and QC methods that will be utilized by Resolution Consultants to ensure quality in the stabilization of dioxin-impacted sediment on Sites 8B. Blank copies of several forms that will be utilized under this QCP are included in Appendix F.

3.1 Objectives

The objectives of this QCP are to provide the specific activities associated with QC during the project and to ensure these activities are performed in accordance with the requirements of the contract and applicable regulations.

3.2 Project Organization and Responsibilities

QC personnel include the Project Manager (PM), Site Supervisor, Project QC Manager, Project Engineer, Site Safety Officer (SSO), and subcontractors. Responsibilities of the QC personnel are described in the following sections. Figure 3-1 shows the project organization chart.

3.2.1 Project Manager

- Coordinates all work performed by Resolution Consultants personnel and subcontractors for the project
- General communications with the Navy Remedial Project Manager and Navy Technical Representatives
- Overall management of project technical, financial, administrative, quality, and schedule performance
- Reviewing all work in progress and submittals
- Resolution of project quality issues
- Development of project plans, reports, and associated documentation
- Preparing and submitting required work progress reports
- Allocating resources for quality management

3.2.2 Site Supervisor

- Supervision and coordination of all project field activities
- Supervision of the craft labor (equipment operators, truck drivers, and laborers), technical staff, and all subcontractors
- Preparation of Daily Reports and other documentation associated with field activities

3.2.3 Project QC Manager

- Ensuring compliance with the contract documents (including work plans, drawings, submittals, and change orders)
- Reviewing daily field activities to assess overall project quality and identify any potential QC issues
- Performing and documenting field inspections
- Scheduling, reviewing, certifying, and managing project submittals
- Maintaining the Submittal Register
- Providing coordination of required quality control testing and reviewing results
- Tracking construction deficiencies and ensuring timely corrective action
- Coordinating field sampling activities (as required)
- Ensuring that all materials, workmanship, inspections, sampling, and testing are in compliance with contract documents
- Managing and maintaining quality system documentation

3.2.4 Project Engineer

- Ensuring construction activities have been completed in accordance with the contract documents, and overall project objectives
- Assisting in budgeting, scheduling, and planning

Figure 3-1 Project Organization Chart

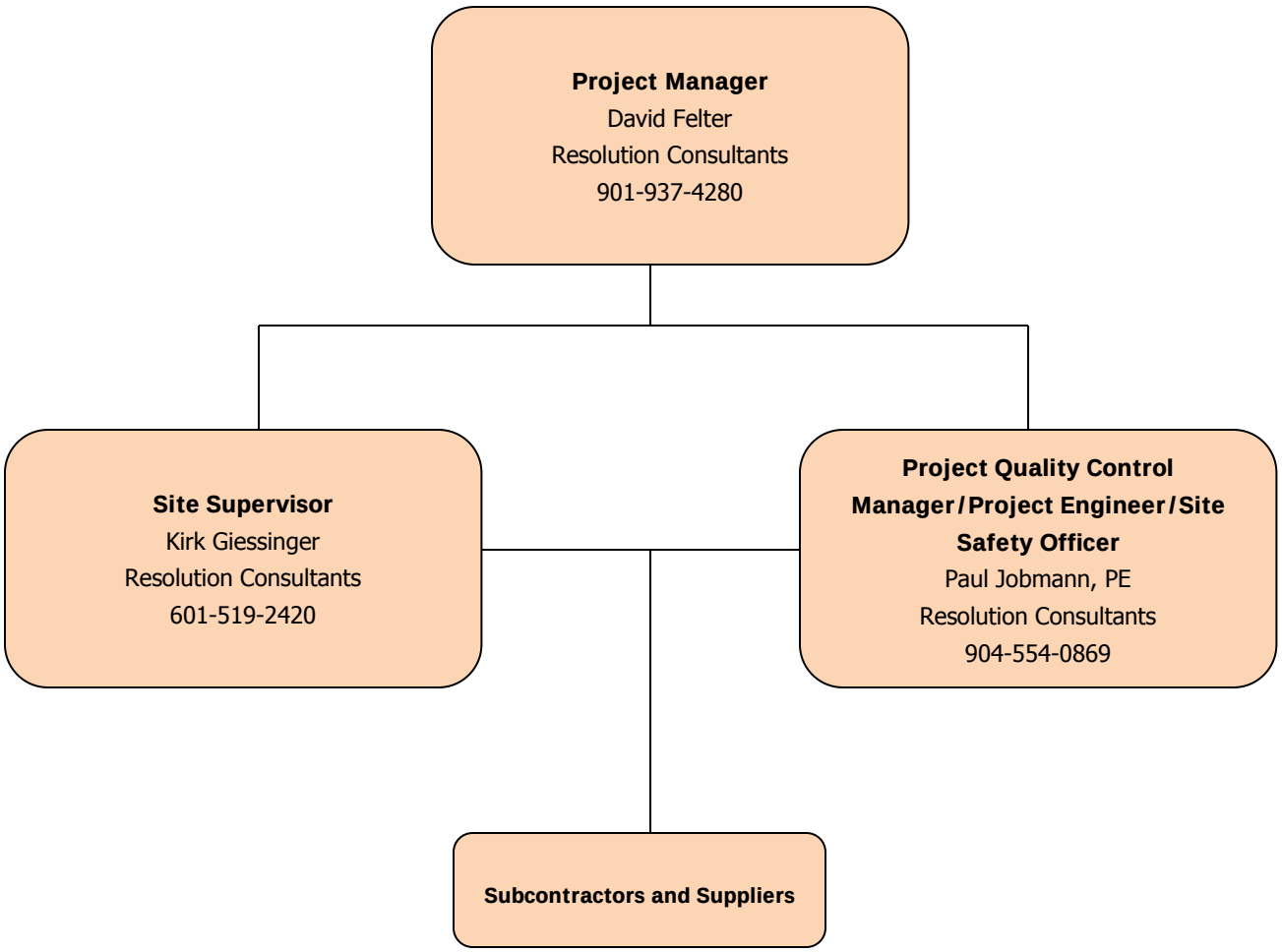

3.2.5 Site Safety Officer

- Managing, implementing, and enforcing Resolution Consultants health and safety program in accordance with the accepted Accident Prevention Plan (APP)

- Being present during activities to implement the APP/Site Safety and Health Plan (SSHP)

- Inspecting site activities to identify safety and occupation health deficiencies and correct them

- Ensuring all field personnel, including any Subcontractor personnel, assigned to the project have satisfied requirements for training and medical surveillance as specified by 29 Code of Federal Regulation (CFR) 1910.120, and that records of training and medical approval are available and maintained for each person

- Overseeing compliance with the APP/SSHP procedures and Occupational Safety and Health Administration (OSHA) regulations through daily inspections

- Stopping work if unacceptable safety and health conditions exist, and take necessary action to re-establish and maintain safe working conditions

- Maintaining all required safety and health records (e.g., OSHA 300 Logs, incident/accident reports, training certificates and qualifications, equipment checklists, safety plans, air monitoring data and reports, etc.) throughout the life of the project

3.2.6 Subcontractors

Subcontractors will be selected by Resolution Consultants to perform specified tasks under this project, including clearing, geotechnical testing, chemical analyses, drainage ditch excavations, sediment screening, and sediment stabilization. It is the role of each subcontractor to plan, manage, and complete the construction activities in accordance with the contract requirements. Subcontractors will work in accordance with their own internal QC procedures, but Resolution Consultants will manage subcontractor activities to ensure conformance to the requirements of this QCP.

Subcontractors include those organizations supplying services and products to the project. Field and laboratory testing of sediment materials will be required during this project. Chemical analyses of the stabilized material will be performed by Cape Fear Analytical. Chris Cornwell will serve as the Laboratory Project Manager. Geotechnical testing of sediment materials and the stabilized sediment will be performed by BECC, and Marty Burford will serve as the Project Manager. Design and construction oversight will be conducted by the Resolution Consultants Project Team. Resolution Consultants will provide support for report preparation, peer review, regulatory compliance, engineering design, construction QC, and permitting plans.

3.3 Quality Control Meetings

3.3.1 Pre-Construction Meeting

A pre-construction meeting will be held at the site prior to the start of construction activities. The meeting will be held with the Navy and invited stakeholders at NCBC Gulfport. At a minimum, Resolution Consultants' Project Manager and Project Engineer and the subcontractors' Project Manager will attend. The purpose of the pre-construction meeting is to:

- Provide all parties with relevant documents
- Review the plans and drawings provided by the Project Engineer
- Discuss any appropriate modification of the QCP
- Review the responsibilities of each party
- Review line of authority and communication
- Review procedures for documentation and reporting of information
- Review distribution and storage of documents
- Establish protocols for testing
- Establish protocols for handling construction deficiencies, repairs, and retesting
- Conduct a site walk to discuss work plans and inspect the work area
- Establish areas for work, storage, traffic, parking, etc.
- Review a time schedule for all operations
- Review work area security and safety protocol
- Discuss and establish procedures for the conduct of the work
- Discuss health and safety requirements applicable to all parties
- Discuss and establish procedures for care and control of storm water, erosion, dust control, litter control, etc.

3.3.2 Ad Hoc Meetings

Resolution Consultants may be asked to coordinate and attend meetings via teleconference. These meetings are to be held at the discretion of the Navy Remedial Project Manager, and invitees may include regulators or other stakeholder attendees.

3.3.3 Construction Deficiency Meeting

A special meeting will be held if a problem or deficiency is present or likely to occur. At a minimum, the meeting will be attended by the Subcontractor, the Project QC Manager, and PM. The purpose of the meeting is to define and resolve the problem or work deficiency as follows:

- Define and discuss the problem or deficiency
- Review alternative solutions
- Implement an action plan to resolve the problem or deficiency

3.3.4 Project Closeout Meeting

A closeout meeting will be held prior to the final inspection of the work to discuss and resolve all unsettled matters and outstanding construction items.

All meetings will be documented by the Project QC Manager and minutes will be made available to all participants.

3.4 Submittals

3.4.1 Construction QC Submittals

The PM will be responsible for the overall management and control of onsite project submittals. Construction QC submittals are generated by either the Project QC Manager or the Subcontractor during or immediately prior to construction, to demonstrate that proposed materials are in compliance with the project plans and to verify that the correct products and quantities will be used on the project. Submittals can include documents for base access, personnel certifications, product data, and/or samples. Submittal requirements for these projects are recorded in the Submittal Register (Appendix F), in accordance with the requirements identified in the project plans. The Project QC Manager will log and track all submittals on the Submittal Register.

Specific responsibilities regarding submittals include:

- Coordinating all submittal actions
- Maintaining necessary submittal records in an organized manner
- Maintaining and tracking submittals in the Submittal Register
- Reviewing and certifying all submittals for compliance with the project plans, drawings, and change orders
- Checking all material and equipment delivered to the project for compliance with contract documents

3.4.2 Submittal Review and Control

Resolution Consultants will control and schedule all submittals and will document the process in the Submittal Register. The Project QC Manager is responsible for updating the Submittal Register at least weekly. Each submittal will be reviewed for completeness and compliance with contract requirements by individuals qualified to perform review of that specific item. Authorized submittal reviewers and approvers include the PM, the Project QC Manager, and the Project Engineer. The Project QC Manager will assure that work will not be permitted to begin without properly approved submittals. Each submittal register will be routed on a standard Submittal Form. Units of weights and measures used on the submittals will be consistent with those used in the project documents. All submittals must comply with the projects construction schedule. Su bmittals for items that are extremely critical or complex, or are considered an extension of the work plan, may be submitted by Resolution Consultants for Navy review and approval.

The Project QC Manager will certify that the submittal complies with the contract requirements. Submittals that do not comply with the requirements will be returned to the originator for correction and resubmittal. Substitutions or variations of specified requirements will be clearly noted. Certification of the approved submittals will be indicated by signing or initialing and dating the submittal form by the Project QC Manager.

3.5 Quality Control Inspections

3.5.1 Inspections

QC inspections will be conducted and documented during the stabilization activities. An inspection form is included in Appendix F. The QC inspections will include the following:

- Inspection of the construction activities to ensure work is being executed in compliance with the contract requirements
- Evaluation and review of the quality of workmanship
- Evaluation and confirmation that testing (if required) is being performed in accordance with the contract requirements
- Confirmation that noncompliance work is being corrected promptly and in accordance with the direction provided by the Project QC Manager

The Project QC Manager's responsibilities include inspection of all equipment and materials prior to being accepted and installed at the site and daily review of all construction activities required to complete the contract requirements. The Project QC Manager will be assisted by the Site Supervisor in performing inspections. As additional project-specific tasks are identified, this QCP will be amended to include inspections for those tasks.

3.5.2 Punch List Inspection

A punch list, created at the end of the project, contains a list of items or tasks that need to be repaired or completed. The Site Supervisor and the Project QC Manager will conduct an inspection of the work and develop a punch list of items that do not conform to the approved contract requirements. The punch list will include the estimated date by which the deficiencies will be corrected. After the deficiencies have been corrected, the site will be ready for the pre-final inspection.

3.5.3 Pre-Final Inspection

Navy personnel may perform a pre-final inspection to verify that the construction activities are complete and in accordance with the Work Plan. Any outstanding deficiencies will be noted and must be corrected in a timely manner. The Navy will be notified of the correction and readiness for the final acceptance inspection.

3.5.4 Final Acceptance Inspection

The Navy, based upon the results of the pre-final inspection, will formerly schedule the final acceptance inspection. A final acceptance inspection will be conducted to determine the extent to which the project has been completed in reasonably close conformance with the plans and contract requirements, and authorized changes. The Project QC Manager, Site Supervisor, other project management personnel, and Navy representatives will be in attendance at this inspection. A final acceptance inspection will be considered closed when the work has been accepted by the Navy and its stakeholders and when the acceptance has been documented and signed by all parties.

3.6 Quality Control Testing

QC testing is to be conducted to characterize materials, work-in-progress, and completed work in order to confirm that contract requirements are met. Testing will be conducted and reported in accordance with contract documents, standards, and procedures. Sampling for chemical analyses will be conducted in accordance with the final approved Work Plan and SAP. Sampling for geotechnical testing will be conducted in accordance with the final approved Work Plan and appropriate ASTM standards. Instruments used for testing are calibrated in accordance with established calibration procedures. Technicians performing tests must provide copies of calibration certifications and their field notes and reports to the Project QC Manager.

Resolution Consultants will conduct or oversee all construction QC testing. Test methods will be either observation by the Project QC Manager or analysis by a specific protocol identified in the contract documents. T he results of the testing will be made available to the affected subcontractors as soon as possible to prevent delay to the construction schedule if corrections are necessary.

QC tests that will be completed during implementation of this Work Plan include:

- Field compaction tests to ensure the sediment is compacted to a minimum of 95 percent of the Proctor density.
- UCS/CBR tests on stabilized sediment to confirm the project goals are achieved.
- Leachable dioxin analysis on stabilized sediment to confirm the project goals are achieved.
- Soil density/moisture tests to confirm field geotechnical equipment is operating properly.

These tests will be documented in field logbooks.

3.7 Documentation

The Daily Report is an essential tool for recording and reporting the daily QC activities of the project. These reports are the official record of work performance and compliance with project documents; therefore, they must be kept current. The Site Supervisor and the Project QC Manager are responsible for preparing the Daily Report and submitting them on a weekly basis to the PM. The Project QC Manager will obtain operational information from the Site Supervisor. The Site Supervisor will provide information on the health and safety activities. The Daily Reports will also include reports from each subcontractor working onsite to address the following:

- Quality aspects of the project being performed by the Subcontractors
- Scheduling and resource issues
- Site safety inspections and concerns
- Environmental concerns
- Job progress
- QC inspections
- Tests performed and results
- Personnel and equipment onsite
- Material received

The project team must review the Daily Reports for accuracy and completeness because these reports are often used to prepare the final construction reports for the project. A Daily Report template is included in Appendix F. Documentation that is generated by the QC system must be maintained in an orderly fashion.

3.7.1 Field Documentation Operating Procedures

The objective of the field documentation operating procedures is to ensure that appropriate project information is documented in log books during construction. QC observations, inspections, and records of general QC activities on a regular basis are as follows:

- Record daily progress and associated QC inspections
- Record construction operation, sequence, staging, etc.
- Maintain waste disposal records
- Describe deviations from expected conditions or unexpected problems and their resolution

3.7.2 Field Logbook

The Project QC Manager and the Site Supervisor will maintain a record of daily construction and QC activities during construction in a field logbook. The field logbooks will be available for review upon request.

3.7.3 Progress Reports

The Project QC Manager will prepare a summary progress report each week. The report will include a summary of work activities, construction deficiencies, tests, failures, and retests during the previous week's reporting period.

3.7.4 Project Record Close Out

At the close of the project, Resolution Consultants will store and retain all project information and data in accordance with its contract with the Navy.

3.8 Construction Change Order

Circumstances may arise during construction activities that require a change to the scope of work. There are also routine changes that will not impact the scope of work. These changes include unanticipated site conditions, use of alternative construction methods, substitution of material, etc. It is the PM's responsibility to ensure the prompt and accurate documentation of these changes to minimize impacts to the project cost and schedule. Verbal notification of any changes will be made immediately and then will be documented on the Change Order form. Change Orders will be used to communicate and document clarifications and modifications requested by the Subcontractor. The Change Orders will be tracked and logged by the Project QC Manager to ensure that each Change Order is fully addressed and that changes to the contract documents are completely and accurately documented. A Change Order form is included in Appendix F.

3.9 Noncompliance and Corrective Action

The Project QC Manager will notify the Subcontractor of any detected noncompliance with the contract requirements. The Subcontractor will take immediate corrective action after receipt of such notice. Such notice, when delivered to the Subcontractor at the work site, will be deemed sufficient notification. If the Subcontractor fails or refuses to comply promptly, the Project QC Manager may issue an order stopping all or part of the work until satisfactory corrective action has been taken. Noncompliance notification or stop work order will be documented in the Daily Report. Verification of the corrective action and its results will be performed by the Project QC Manager and documented in the Daily Report.

4.0 WASTE MANAGEMENT AND ENVIRONMENTAL PROTECTION PLAN

4.1 Purpose and Scope

The following section discusses the purpose and scope of the Waste Management Plan (WMP) and the Environmental Protection Plan (EPP).

4.1.1 Waste Management Plan

The purpose and scope of this WMP is to document Resolution Consultants' approach for managing wastes generated through completion of sediment stabilization efforts. This section will discuss the goals, methods and activities that will be employed to manage waste generation at the site. Also included as a part of this overall plan is information defining Resolution Consultants' approach to waste minimization.

All waste classifications expected to be generated, including personnel protective equipment (PPE), are discussed. The primary waste stream consists of dioxin-impacted sediment stockpiled primarily in the northern portion of Site 8B; a s maller pile is in the southern part of 8B. Dioxin-impacted sediment will also be generated as part of the drainage ditch excavations, culvert cleaning, and site preparation. The total volume of stockpiled soil is estimated to be approximately 13,000 CYs, which is discussed further in Section 1.9. The stockpiled sediment and the excavated drainage ditch sediment will be stabilized with Portland cement on Site 8B.

The waste materials discussed in this WMP include the following:

- Dioxin-impacted sediment
- Wood, root, and other fibrous materials resulting from the vegetation clearing activity
- Waste generated from screening sediments to be stabilized, such as rocks, cement chunks, and golf balls
- Generated water/rinsate collected from decontamination operations
- Secondary site debris such as office trash, PPE, plastic covering, etc.

4.1.2 Environmental Protection Plan

The EPP will outline the work practices and measures to abate, control, and mitigate impacts to the environment during the pilot test. The purpose and scope of this EPP is to document Resolution Consultants' approach for minimizing environmental impact through completion of site remedial activities at NCBC Gulfport. This plan will discuss the goals, methods and activities that will be employed to protect and preserve the environment.

The environmental concerns anticipated during construction activities include dewatering excavation areas, draining excavated soils, and decontamination efforts associated with field equipment and vehicle wash waters. Water resulting from the draining of excavated soils will be will be pumped to frac tanks to allow sediment to settle out. Accumulated water will primarily be used to hydrate the Portland cement amended sediment. If the water is not used for hydration purposes, it will be tested and a determination will be made to allow the discharge of collected water. If water will be discharged, it will be pumped to a permeable area within the limits of Site 8B or 8C, where it will be slowly discharged through a sediment filtration bag and allowed to infiltrate into the ground.

Water resulting from excavation dewatering will be diverted around the section of ditch being excavated or pumped to frac tanks to allow sediment to settle. If a determination is made to allow the discharge of collected water, the water will then be pumped to a permeable area within the limits of the Sites 8B or 8C, where it will be slowly discharged trough a sediment filtration bag and allowed to infiltrate into the ground.

Sediment that has settled out of the water in the frac tanks will be removed from the tanks and stabilized on Site 8B.

4.2 Non-Storm-Water Discharges

The non-storm-water discharges anticipated during construction activities will be water resulting from decontamination efforts associated with construction equipment and vehicle wash waters. Water resulting from the decontamination efforts will be pumped to frac tanks and used for hydration of the Portland cement amended soil.

4.3 Pollution Prevention Measures

The following is a list of materials or substances that are anticipated to be stored on site during the proposed work:

- Diesel fuel and other vehicle maintenance substances
- Small quantities of laboratory chemicals, marking paints, and other flammable substances

Detergents and small containers or drums of oil, grease, antifreeze, hydraulic fluids, etc., if any, will be stored within an enclosed storage container, and any diesel fuel will be stored in approved, double-walled storage tanks. The storage tanks will be designed to contain at least 10 percent of the total contents of all materials stored in the area plus an allowance for precipitation. A small sump or low point will be designed to serve as a monitoring point for any leaks or spills from the containers. Inspection of the area and management of substances collected in this area will be completed daily.

Small quantities of laboratory chemicals, marking paint, and other flammable substances may be stored on site during this project. These materials, when not in use, will be stored in a Subcontractor-supplied flammable storage cabinet located in or near the office trailer. Practices that will be followed to reduce risks associated with these materials are:

- Products will be kept in original containers unless they are not re-sealable

- Original labels and safety data sheets will be retained in the construction trailer and copies and quantities will be provided to the Base Environmental Division

- If surplus product must be disposed, manufacturers' or local- and State-recommended methods for proper disposal will be followed

The following paragraphs describe specific spill prevention and material management practices that will be employed during this project.

The Subcontractor will arrange for the transportation and disposal of all generated wastes at an approved disposal facility. Disposal of waste will be coordinated with Resolution Consultants and NCBC Gulfport to ensure the receiving facility is properly permitted. Navy personnel will provide generator certification and signature for all waste documentation.

Liquid waste that is not reused during stabilization activities will be temporarily stored in bulk in the frac tanks. A sample will be collected from the frac tanks and submitted to Cape Fear Analytical for the analysis to determine if the liquid can be discharged slowly to a permeable area on Site 8B or 8C. If disposal is required, the Subcontractor will arrange and dispose of the liquid waste following coordination with Resolution Consultants and NCBC Gulfport Hazardous Waste Program Manager, Mr. Stanley Smith.

4.4 Goals

The following is a list of goals to minimize waste during implementation of the Work Plan:

- Integrating waste minimization principles.
- Decontaminating equipment and waste.
- Taking care when loading trucks to minimize spills.
- Extensive sampling will be implemented to insure that only contaminated material is excavated, thereby reducing the total waste volume.
- Site restoration activities will be implemented to prevent soil erosion.

4.5 Good Housekeeping

The following are the material management practices that will be used to reduce the risk of spills or other accidental exposure of materials and substances to storm water runoff:

- Designate areas for equipment maintenance and repair.
- Designate areas for equipment decontamination.
- Provide waste receptacles at convenient locations and provide regular collection of waste.
- Provide protected storage areas for chemicals, paints, and other potentially toxic materials.
- Provide adequately maintained sanitary facilities.

- An effort will be made to store only enough products required to accomplish the task.

- All materials stored on site will be stored in a neat, orderly manner in their appropriate containers and, if possible, under a roof or other enclosure.

- The assigned individuals will inspect areas daily to ensure proper use and disposal of materials on site.

4.6 Spill Control Practices

In addition to the good housekeeping and material management practices discussed above, the following practices will be followed for spill prevention and cleanup:

- Materials and equipment necessary for spill cleanup will be kept near the diesel storage tank. Equipment and materials will include but will not be limited to brooms, dust pans, mops, rags, gloves, goggles, absorbent material, and plastic and metal containers specifically designed for this purpose.

- All spills will be cleaned immediately after discovery.

- Spills of toxic or hazardous material will be reported to the appropriate Base, State and/or local government agency, as required.

- If a spill of toxic or hazardous material occurs, the *Storm Water Pollution Prevention Plan* (Resolution Consultants, May 2015) will be modified to include measures to prevent this type of spill from reoccurring and information about how to clean the spill if there is a recurrence. A description of the spill, what caused it, and the cleanup measures will also be included in the revised plan.

- The Subcontractors On-Site Supervisor responsible for day-to-day site operations will be the spill prevention and cleanup coordinator. If that person will not be on base on a certain day, a temporary coordinator will be named and Resolution Consultants will be notified. The names of responsible spill personnel will be posted in the material storage areas and in the office trailers located on site.

4.7 Contaminated Sediment

The primary scope of work for this project is to stabilize sediment from various sources around Sites 8B and 8C. Sediment will be loaded with conventional construction equipment onto trucks and transported to a designated mixing/screening area on Site 8B, where it will eventually be stabilized with Portland cement. As the trucks leave the mixing/screening area, they will pass through a decontamination area that will remove all residual soils from the exterior of the equipment.

At the end of stabilization activities, there will likely be some sediment that has settled out of the decontamination water that was pumped to the frac tanks. The Subcontractor will be required to remove the sediment and decontaminate the frac tanks. The Subcontractor will be required to provide the necessary equipment and personnel and complete any necessary permits for confined space entry to clean the frac tanks. The sediment will be stabilized with 14 percent Portland cement in an area on Site 8B.

4.8 Wood, Root, and Other Fibrous Material

Wood, root, and other fibrous waste will be generated during the clearing activity prior to the sediment removal task. The cut trees will be stockpiled in the designated area and chipped. The stumps and any organic material that was below grade will be removed, shaking any excess soils from the root balls, washed, and stockpiled for chipping separately from the waste that was above the ground surface. The wood and other fibrous material that was above the ground surface will be chipped and disposed off base at an approved RCRA Subtitle D landfill. The below-grade wood, root, and other fibrous waste that was generated will be chipped and spread in a layer across Site 8C where it will be covered to prevent wind erosion and allowed to biodegrade. .

4.9 Decontamination Rinsate Water

Decontamination rinsate water will be generated during the decontamination of the equipment at the designated wash racks constructed within the equipment and solid waste decontamination/storage area shown on the Site Plan in Section 5.0. The majority of the decontamination water will be collected, stored, and used for hydration during the Portland cement stabilization process. It is anticipated that water used to decontaminate equipment prior to demobilization will be used in the stabilization process or discharged slowly through a sediment filtration bag to a permeable area on Site 8B or 8C.

4.10 Waste Generated During Sediment Screening

Solid waste generated during sediment screening will be decontaminated to remove sediment/soil. The material either will be washed by spray nozzles while the sediment is being screened by the process plant or it will be cleaned using pressurized water by Subcontractor personnel. The rinsate water will be collected and pumped to the frac tanks for reuse during stabilization activities. The decontaminated waste will be reused as backfill in historical USAF excavation areas, recycled, or spread across Site 8C to allow it to decompose. Remaining solid waste that cannot be dealt with as noted will be containerized in 55-gallon drums, characterized, and transported off base for disposal at an approved landfill.

4.11 Secondary Site Debris

Secondary site debris consists of miscellaneous waste such as plastic sheet materials, PPE, etc. This waste stream will be characterized and disposed off base according to the waste characterization results. Other debris such as office trash will be considered non-hazardous and will be collected in a dumpster, removed from the base, and disposed at an approved landfill.

Resolution Consultants will make every effort to control, reduce, label and dispose of generated wastes in an efficient and compliant method, specific to each waste stream detailed above.

5.0 SITE PLAN

A Site Plan for the planned work is attached in this section.

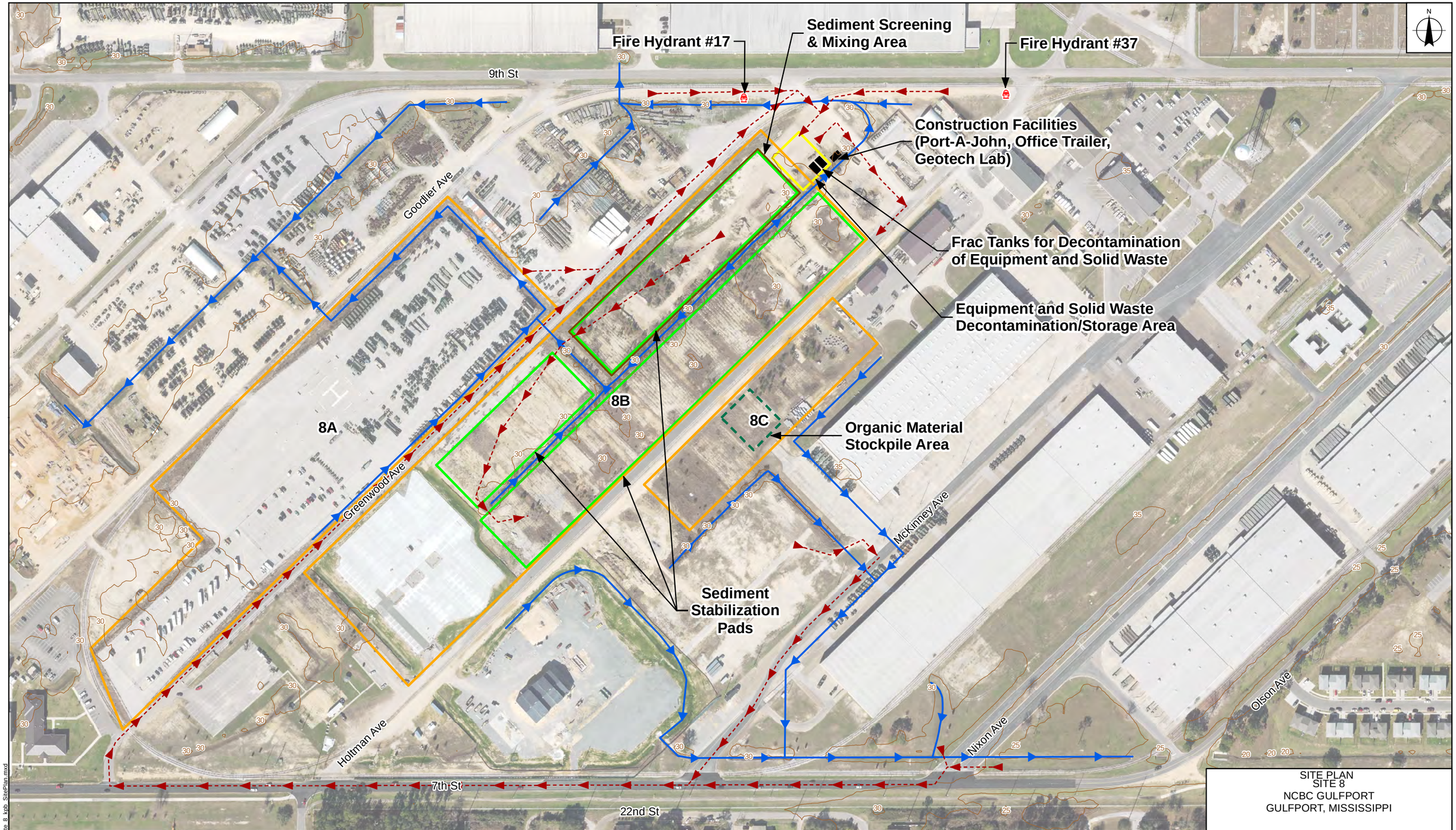

SITE PLAN
SITE 8
NCBC GULFPORT
GULFPORT, MISSISSIPPI

Elevation Contours
Ditch with Flow Direction
Truck Routes
Organic Material Stockpile Area
Current Site Boundary
Equipment and Solid Waste Decontamination Area
Sediment Screening & Mixing Area
Sediment Stabilization Pads

0 240 480 Feet

NAVFAC Naval Facilities Engineering Command
RESOLUTION CONSULTANTS

REQUESTED BY: P. JOBMANN	DATE: 5/27/2015
DRAWN BY: N. RINEHART	TASK ORDER NUMBER: JM70

X:\Navy\NCBC_Gulfport\Site 8_kpb_SitePlan.mxd

Harrison County, MS Remote-Sensing Image is from Sewall Company and downloaded through the USGS Earth Explorer; Some data are from Tetra Tech; Road names were acquired from Esri, DeLorme, HERE, USGS, Intermap, increment P Corp., NRCAN, Esri Japan, METI, Esri China (Hong Kong), Esri (Thailand), TomTom.

6.0 CONSTRUCTION SCHEDULE

A construction schedule for the planned work is attached in this section.

SECTION 6.0
CONSTRUCTION SCHEDULE
SITES 8B AND 8C HERBICIDE ORANGE STORAGE AREA
NCBC GULFPORT
GULFPORT, MISSISSIPPI

ID	Task Name	Duration	Start	Finish
1	**NCBC Gulfport**	**132 days**	**Mon 7/13/15**	**Tue 1/12/16**
2	**Pilot Test**	**132 days**	**Mon 7/13/15**	**Tue 1/12/16**
3	**Mobilization and Site Preparation**	**7 days**	**Mon 7/13/15**	**Tue 7/21/15**
4	Mobilization	5 days	Mon 7/13/15	Fri 7/17/15
5	Set up Construction Facilities	3 days	Wed 7/15/15	Fri 7/17/15
6	Install Erosion & Sediment Control Measures in Ditches	3 days	Fri 7/17/15	Tue 7/21/15
7	Set up Spill Prevention Control Measures	1 day	Mon 7/20/15	Mon 7/20/15
8	**Pilot Test Activities**	**126 days**	**Tue 7/21/15**	**Tue 1/12/16**
9	**Ditch Excavation**	**15 days**	**Tue 7/21/15**	**Mon 8/10/15**
10	Clear and Grub Ditches	1 day	Tue 7/21/15	Tue 7/21/15
11	Ditch Sediment Excavation	2 days	Thu 7/23/15	Fri 7/24/15
12	Ditch Confirmation Sampling	1 day	Fri 7/24/15	Fri 7/24/15
13	Culvert Cleaning	1 day	Mon 7/27/15	Mon 7/27/15
14	Laboratory Analysis of Confirmation Samples	7 days	Tue 7/28/15	Wed 8/5/15
15	Data Evaluation	1 day	Thu 8/6/15	Thu 8/6/15
16	**Restoration Activities**	**3 days**	**Thu 8/6/15**	**Mon 8/10/15**
17	Site 8A & 8C Ditch Restoration	3 days	Thu 8/6/15	Mon 8/10/15
18	**Sediment Stabilization**	**70 days**	**Mon 7/27/15**	**Fri 10/30/15**
19	Clear and Grub Stockpiles and Stabilization Area	5 days	Mon 7/27/15	Fri 7/31/15
20	Sediment Screening & Mixing	56 days	Thu 7/30/15	Thu 10/15/15
21	Mix Sediment with Portland and Water and Compact	14 days	Tue 10/13/15	Fri 10/30/15
22	**Testing**	**66 days**	**Tue 10/13/15**	**Tue 1/12/16**
23	**Geotechnical Testing**	**32 days**	**Tue 10/13/15**	**Wed 11/25/15**
24	Field Compaction	15 days	Tue 10/13/15	Mon 11/2/15
25	7 Curing Day Tests	15 days	Thu 10/22/15	Wed 11/11/15
26	Data Evaluation	25 days	Thu 10/22/15	Wed 11/25/15
27	**Chemical Testing**	**59 days**	**Thu 10/22/15**	**Tue 1/12/16**
28	Stabilized Sediment Sampling	15 days	Thu 10/22/15	Wed 11/11/15
29	Analysis of Stabilized Sediment Samples	21 days	Tue 10/27/15	Tue 11/24/15
30	Data Evaluation	35 days	Wed 11/25/15	Tue 1/12/16
31	Demobilization	4 days	Mon 11/2/15	Thu 11/5/15
32				

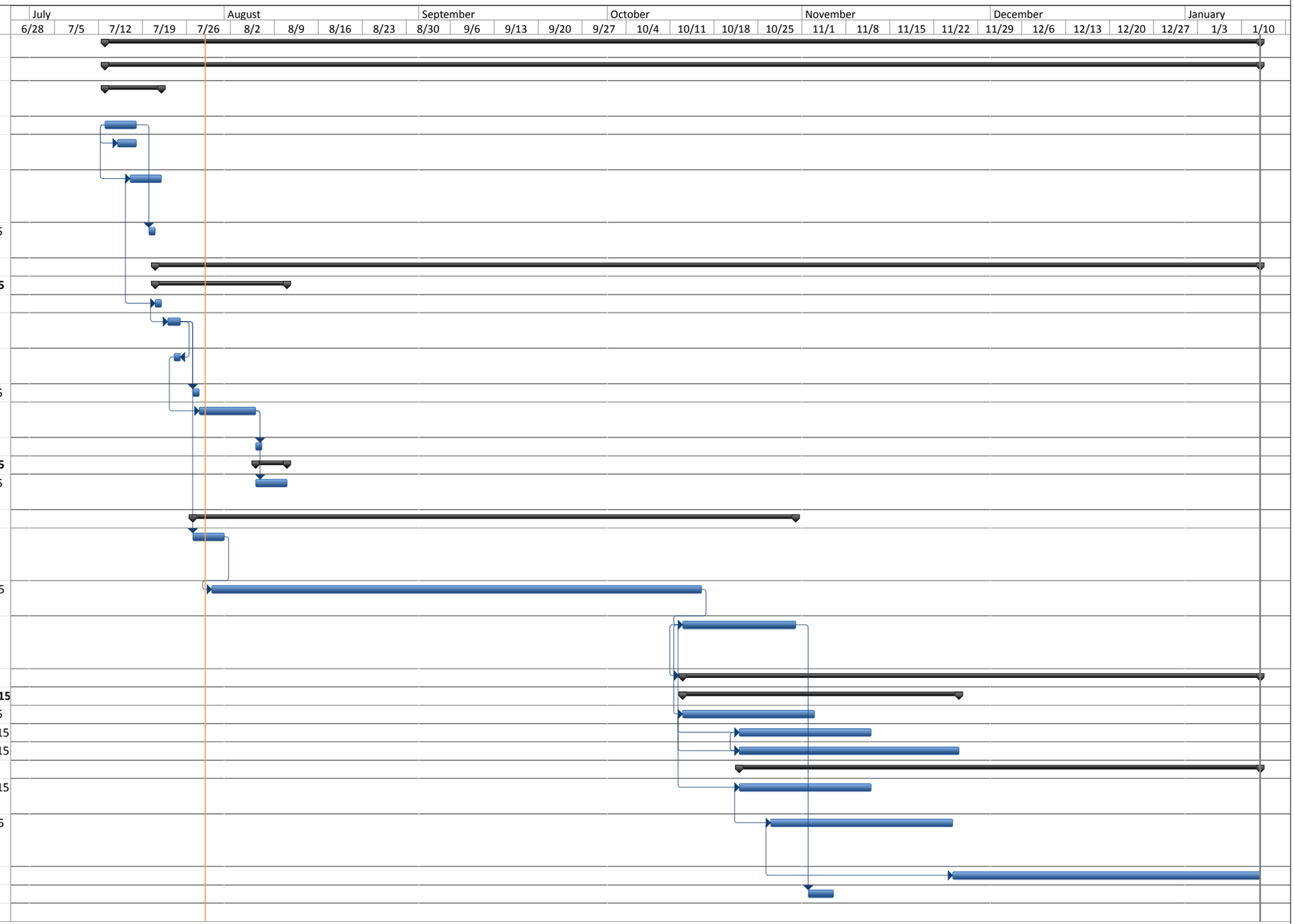

Project: Pilot Test Schedule_0630
Date: Wed 7/29/15

Task | Split | Milestone | Summary | Project Summary | Progress

7.0 REFERENCES

American Society for Testing and Materials Standard D1633-00. *Standard Test Method for Compressive Strength of Molded Soil-Cement Cylinders.* 2000, reapproved 2007.

— Standard D1883-07. *Standard Test Method for CBR (California Bearing Ratio) of Laboratory-Compacted Soils*. 2007.

— Standard D7263-09. *Laboratory Determination of Density (Unit Weight) of Soil Specimens*. 2009.

— Standard D2216-10. *Standard Test Method for Laboratory Determination of Water (Moisture) Content of Soil and Rock by Mass*. 2010.

— Standard D6938-10. *Standard Test Method for In-Place Density and Water Content of Soil and Soil-Aggregate by Nuclear Methods (Shallow Depth).* 2010.

— Standard D558-11. *Standard Test Methods for Moisture-Density (Unit Weight) Relations of Soil-Cement Mixtures.* 2011.

American National Standards Institute Z4.3-1995. *Sanitation — Nonsewered Waste-Disposal Systems — Minimum Requirements, Section 3*. Revised 2005.

Arthon Industries Limited. (Website). *Stockpile Volume Calculator.* Retrieved from: http://www.arthon.com/calculators/stockpile_british.shtml

CH2M Hill Constructors, Inc. *Summary of Dioxin-Contaminated Soil Removal Activities and Results, Site 8, NCBC.* Gulfport, Mississippi. January 2003.

Code of Federal Regulations 29 CFR 1926.51. *Safety and Health Regulations for Construction — Sanitation*. June 2011.

ECC. *Project Completion Report, Remediation Activities Site 8 — Herbicide Orange Storage Area and Off-Base Area of Contamination, Naval Construction Battalion Center.* Gulfport, Mississippi. December 2007.

EG&G Idaho, Inc. *Herbicide orange site characterization study, Naval Construction Battalion Center.* Idaho Falls, ID. 1997.

KEMRON Environmental Services, Inc. *Remedial Action Work Plan Site 8B and 8C Naval Construction Battalion Center*. Gulfport, Mississippi. February 2008.

— *Completion Report of Remedial Actions for Site 8B and 8C, Naval Construction Battalion Center.* Gulfport, Mississippi. September 2008.

— *Presentation Slides Regarding Canal Road Cleanup and Soil Removal Site 8 (Public Document) Naval Construction Battalion Center*. Gulfport, Mississippi. July 2008.

Mississippi Department of Environmental Quality. "Handbook for Erosion Control, Sediment Control and Stormwater Management on Construction Sites and Urban Areas", *Volume 1 Erosion and Sediment Control Practices.* 2011.

— *Mississippi Storm Water Pollution Prevention Plan Guidance Manual for Construction Activities*. General Permits Branch, Office of Pollution Control. December 2013

Naval Facilities Engineering Command Southeast. *Proposed Plan for Site 8, Herbicide Orange Storage Area and Associated Areas, Naval Construction Battalion Center.* Gulfport, Mississippi. November 2001.

Resolution Consultants. *Draft Final Sampling and Analysis Plan, Sites 8B and 8C Engineering Effort, Herbicide Orange Storage Area and Associated Areas, Naval Construction Battalion Center.* Gulfport, Mississippi. December 2014.

— *Final Technical Memorandum, Sediment Stabilization Treatability Test, Site 8, Herbicide Orange Storage Area and Associated Areas, Naval Construction Battalion Center.* Gulfport, Mississippi. April 2015.

— *Draft Final Technical Memorandum, Stabilization Treatability Test Results, Site 8, Herbicide Orange Storage Area and Associated Areas, Naval Construction Battalion Center.* Gulfport, Mississippi. May 2015.

— *Final Storm Water Pollution Prevention Plan, Sites 8B and 8C Engineering Effort, Herbicide Orange Storage Area and Associated Areas, Naval Construction Battalion Center.* Gulfport, Mississippi. May 2015.

Tetra Tech NUS Inc. *Work Plan Bench-Scale Soil/Sediment Treatability Study, Site 8 Herbicide Orange Study Area Naval Construction Battalion Center*. Gulfport, Mississippi. October 2000.

— *Work Plan Pilot-Scale Soil/Sediment Treatability Study for Site 8 Herbicide Orange Study Area Naval Construction Battalion Center*. Gulfport, Mississippi. December 2000.

— *Report for Bench-Scale Soil/Sediment Treatability Study, Site 8 Herbicide Orange Study Area, Naval Construction Battalion Center*. Gulfport, Mississippi. March 2001

— *Report for Pilot-Scale Soil/Sediment Treatability Study, Site 8 Herbicide Orange Study Area, Naval Construction Battalion Center*. Gulfport, Mississippi. December 2001

— *One-Hundred Percent Remedial Design Site 8 Naval Construction Battalion Center. Gulfport, Mississippi*. October 2004.

— *Five Year Review Sites 5, 6, 8, and 10 Naval Construction Battalion Center. Gulfport, Mississippi*. February 2011.

— *Site 8B Long Term Monitoring Sampling Update Naval Construction Battalion Center. Gulfport, Mississippi*. October 2013.

Appendix A
Sediment Volume Calculations

Appendix A Sediment Volume Calculations
Sediment Stabilization Work Plan
Site 8B and 8C Herbicide Orange Storage Area
NCBC Gulfport
Gulfport, Mississippi

Calculate volume/tonnage of sediment that will be stabilized during the pilot test.

Assumptions:
Conservative estimate of the weight of a cubic foot of sediment is 124.86 pounds (wet, earth) (Reference http://www.arthon.com/calculators/stockpile_british.shtml)
Ditch sediments based on the linear feet of ditch to be excavated and excavating one foot from the bottom and sides of the ditches.

	Length	Width	Height	Volume (cu ft)	Volume (cu yds)	Notes
Stockpile 1	175	40	1	7,000	259	
Stockpile 2	150	120	4	72,000	2,667	
Stockpile 3	55	30	4	6,600	244	
Stockpile 4	250	300.25	varies*	75,063	2,780	*Depth built into width calc
Stockpile 5	150	54	2	16,200	600	
Stockpile 6	33	14	8	3,696	137	
Ditches	3070	11	1	33,770	1,251	
Precautionary Ditch Cleaning	1392	11	1	15,312	567	
Culverts	1320		0.25	330	12	
Scraping (NW quad)	720	175	0.1666667	21,000	778	Scrape 2 inches
Scraping (SW quad)	420	145	0.0833333	5,075	188	Scrape 1 inch
Milling all Site 8B	2112	168	0.25	88,704	3,285	Mill 3 inches
USAF Excavations	30000		0.5	15,000	556	
			Total	359,750	13,324	

Notes:
NA = Not applicable
ft = Feet
ft2 = square feet
ft3 = cubic feet
yd3 = cubic yards

Appendix B
Base Access Documents

REQUEST FOR EMPLOYEE ACCESS

NAME (Last):	NAME (First):	NAME (Middle):	DATE OF REQUEST:
ADDRESS (Home):		PHONE/AREA CODE:	DATE OF BIRTH:
SOCIAL SECURITY NUMBER:		KIND OF BADGE DESIRED (Filled Out By Government Host)	
COLOR OF HAIR:	COLOR EYES:	BADGE COLOR:	☐ CIVIL SERVICE
HEIGHT:	WEIGHT:	☐ CONTRACTOR	☐ NON-APPROPRIATED FUNDS
EMPLOYER:		☐ OTHER THAN ABOVE (Explain)	
EMPLOYER ADDRESS:		BADGE REQUEST FOR: _____ MONTHS (1YR Max For Contractors)	
PHONE/AREA CODE:	APPLICANT OCCUPATION:	START DATE:	EXPIRATION DATE:

I agree to report immediately to the Security Officer upon term of employment, completion of business transactions or any other reason that may cancel or alter my privilege for entry to the Station. I hereby agree to and certify that the above information and statements are true. I further agree to abide by all rules and regulations of this activity and subject myself and/or vehicle to search or detention for protection of information of property of the U.S. Government.

Please initial: I am _____ am not _____ a U.S. Citizen. SIGNATURE OF APPLICANT: _____

APPLICANT WILL NOT WRITE BELOW THIS LINE

(PRIME CONTRACTOR USE ONLY)

I agree to report immediately to the Security Pass/ID Section and my immediate supervisor in the event the badge is destroyed, lost or stolen. My supervisor will sign and acknowledgement of loss report before a new badge will be issued.
FOR CONTRACTORS OR NON-APPROPRIATED FUND CONTRACTOR OR BADGE APPLICATION: I HEREBY CERTIFY THAT THE PERSON APPLYING ON THIS FORM IS EITHER A BORN OR NATURALIZED U.S. CITIZEN, PERMANENT RESIDENT ALIEN OR OTHERWISE LEGALLY ALLOWED EMPLOYMENT IN THE UNITED STATES.

SIGNATURE OF PRIME CONTRACTOR: _____

SUPERVISOR'S SIGNATURE:	SUPERVISOR'S NAME (Printed):	DATE:
COMPANY/ORGANIZATION:		PHONE (Area Code):

GOVERNMENT HOST / CONTRACTING OFFICER ENDORSEMENT

FROM (Government Liaison/POC):		ORGANIZATION:	
TO (Pass/ID Office Supervisor):			

1. Security Pass/ID Section will issue an Antiterrorism/Force Protection pamphlet upon issuance of the badge.
2. In accordance with this application, it is requested that a badge be issued for the purpose and duration indicated.

START DATE:		EXPIRATION DATE:	
SIGNATURE (Government Liaison/POC):	RANK AND / OR TITLE:	DATE:	PHONE:

SECURITY PASS / ID OFFICIAL USE ONLY

NOT VALID WITHOUT SECURITY SEAL AND MARK

PASS ISSUED BY: _____ DATE OF ISSUE: _____

NOTICE: TITLE 18 USCA Sec. 132. (June 15, 1917,c.,30, Title X,Sec.3, 40 Stat. 228) FALSELY MAKING OR FORGING NAVAL, MILITARY, OR OFFICIAL PASS. Whoever shall falsely make, forge, counterfeit, alter, or tamper with any Naval, Military, or Official pass, or permit, issued by or under the authority of the United States, or with wrongful or fraudulent intent shall use, or have in his possession any such pass or permit, or shall personate or falsely represent himself to be or not to be a person to who such pass or permit has been duly issued, or shall willfully allow any other person to have or use pass or permit, issued for his use alone, shall be fined not more than $2,000 or imprisoned not more than five years, or both.

DEPARTMENT OF THE NAVY LOCAL POPULATION ID CARD/BASE ACCESS PASS REGISTRATION

PRIVACY ACT STATEMENT:

AUTHORITY: 10 U.S.C. 5013, Secretary of the Navy; 10 U.S.C. 5041, Headquarters, Marine Corps; OPNAVINST 5530.14E, Navy Physical Security; Marine Corps Order 5530.14A, Marine Corps Physical Security Program Manual; and E.O. 9397 (SSN), as amended, SORN NM05512-2 .
PURPOSE(S): To control physical access to Department of Defense (DoD), Department of the Navy (DON) or U.S. Marine Corps Installations/Units controlled information, installations, facilities, or areas over which DoD, DON, or U.S. Marine Corps has security responsibilities by identifying or verifying an individual through the use of biometric databases and associated data processing/information services for designated populations for purposes of protecting U.S./Coalition/allied government/national security areas of responsibility and information; to issue badges, replace lost badges, and retrieve passes upon separation; to maintain visitor statistics; collect information to adjudicate access to facility; and track the entry/exit times of personnel.
ROUTINE USE(S): To designated contractors, Federal agencies, and foreign governments for the purpose of granting Navy officials access to their facility.
DISCLOSURE: Providing registration information is voluntary. Failure to provide requested information may result in denial of access to benefits, privileges, and DoD installations, facilities and buildings.

IDENTITY PROOFING AND APPLICANT INFORMATION

1. LAST NAME:	2. FIRST NAME:	3. MIDDLE NAME:	4. NAME SUFFIX: ☐ Jr. ☐ Sr. ☐ I ☐ II ☐ III ☐ IV

5. HISPANIC OR LATINO *(Check one)*: ☐ YES ☐ NO

6. RACE *(Check one or more)*: ☐ WHITE ☐ AFRICAN AMERICAN OR BLACK ☐ ASIAN ☐ AMERICAN INDIAN OR ALASKIN NATIVE ☐ NATIVE HAWAIIAN OR OTHER PACIFIC ISLANDER

7. GENDER *(Check one)*: ☐ MALE ☐ FEMALE	8. DATE OF BIRTH:	9. CITY OF BIRTH:	10. STATE OF BIRTH:	11. BIRTH COUNTRY:

12. US CITIZEN *(Check)*: ☐ YES ☐ NO

13. DUAL CITIZENSHIP: ☐ YES ☐ NO
CITIZENSHIP IF OTHER THAN US *(Country)* :

U.S. Citizen Minimum Documentation Required:
By Birth - Social Security No and/or State ID/Drivers License.
Naturalized - Certification Number, Petition Number, Date, Place and Court, United States passport number, Social Security No and/or State ID/Drivers License.
Derived - Parent's certification number, Social Security No and/or State ID/Drivers License.

Alien Minimum Documentation Required:
Registration Number, Expiration date, Date of entry, Port of entry.

14. IDENTITY SOURCE DOCUMENTS PRESENTED:	15. DOCUMENT NUMBER:	16. ISSUED BY STATE/COURT:	17. ISSUED BY COUNTRY:	18. ISSUED:	19. EXPIRES:
☐ Social Security No.			United States		
☐ State ID/Drivers License			United States		
☐ Passport No.					
☐ Certification Number and Petition Number					
☐ Derived - Parent's Certification Number:			United States		
☐ Alien Registration No.			United States		
		Date of Entry:	Port of Entry:		
OTHER APPROVED IDENTITY SOURCE DOCUMENTS:					
☐					
☐					

20. WEIGHT *(Pounds)*:	21. HEIGHT *(Inches)*:	22. HAIR COLOR *(Check one)*:	23. EYE COLOR *(Check one)*:
		☐ Blond ☐ Brown ☐ Black ☐ Gray ☐ Red ☐ White ☐ Silver ☐ Auburn ☐ Bald	☐ Brown ☐ Green ☐ Blue ☐ Hazel ☐ Black ☐ Gray ☐ Violet ☐ Unknown

24. HOME ADDRESS *(Include city, state, zip code)*:	HOME PHONE *(Include Area Code)*:
25. BASE SPONSOR'S NAME:	SPONSOR PHONE *(Include Area Code)*:

EMPLOYMENT ACTIVITY INFORMATON

26. EMPLOYER NAME AND ADDRESS *(Include city/state/zip code)*:	EMPLOYER PHONE *(Include Area Code)*:
27. SUPERVISOR NAME AND ADDRESS *(Include city/state/zip code)*:	SUPERVISOR PHONE *(Include Area Code)*:

FOR OFFICIAL USE ONLY WHEN FILLED - PRIVACY SENSITIVE:
Any misuse or unauthorized disclosure of this information may result in both criminal and civil penalties.

28. Check the applicable box for WORK HOURS box or check the OTHER box and enter the work hours, then check the applicable for WORK DAYS:

WORK HOURS: ☐ 0600-1800 ☐ 0800-1700 ☐ OTHER _____ WORK DAYS: ☐ SN ☐ M ☐ T ☐ W ☐ TH ☐ F ☐ ST

PRIOR FELONY CONVICTIONS

29. Have you ever been convicted of a Felony? ☐ YES ☐ NO _____ *Initial*

REQUIREMENT TO RETURN LOCAL POPULATION ID CARD

30. I understand that I am required to return my Local Population Identification Card to the Base Pass Office when it expires or if my employment is terminated for any reason. _____ *(initial)*

AUTHORIZATION AND RELEASE AND CERTIFICATION

31. I hereby authorize the DOD/DON and other authorized Federal agencies to obtain any information required from the Federal government and/or state agencies, including but not limited to, the Federal Bureau of Investigation (FBI), the Defense Security Service (DSS), the U.S. Department of Homeland Security (DHS).

I have been notified of DON right to perform minimal vetting and fitness determination as a condition of access to DON installation/facilities. I understand that I may request a record identifier; the source of the record and that I may obtain records from the State Law Enforcement Office as may be available to me under the law. I also understand that this information will be treated as privileged and confidential information.

I release any individual, including records custodians, any component of the U.S. Government or the individual State Criminal History Repository supplying information, from all liability for damages that may result on account of compliance, or any attempts to comply with this authorization. This release is binding, now and in the future, on my heirs, assigns, associates, and personal representative(s) of any nature. Copies of this authorization that show my signature are as valid as the original release signed by me.

FALSE STATEMENTS ARE PUNISHABLE BY LAW AND COULD RESULT IN FINES AND/OR IMPRISONMENT UP TO FIVE YEARS.

BEFORE SIGNING THIS FORM, REVIEW IT CAREFULLY TO MAKE SURE YOU HAVE ANSWERED ALL QUESTIONS FULLY AND CORRECTLY.

I DECLARE UNDER PENALTY OF PERJURY THAT THE STATEMENTS MADE BY ME ON THIS FORM ARE TRUE, COMPLETE AND CORRECT

DATE _____ SIGNATURE _____

FINAL DETERMINATION ON YOUR ACCESS: The Base Commanding Officer has final authority for determination on granting physical access to DON controlled installations/facilities under his/her jurisdiction.

BELOW COMPLETED BY BASE REGISTRAR PERSON CONDUCTING IDENTY PROOFING and NCIC CHECK

32. INFORMATION VERIFIED BY:	33. ENTERED IN C/S SYSTEM BY:	34. PASS ISSUE DATE:	35. PASS EXPIRATION DATE:

36. NCIC CHECK PERFORMED BY:	37. RESULTS OF NCIC CHECK:	38. RESULTS OF LOCAL RECORDS CHECK:
	☐ NO RECORDS ☐ RECORD IDENTIFIER RECORD NUMBER:	☐ NO RECORDS ☐ RECORD IDENTIFIER RECORD NUMBER:

Office of Under Secretary of Defense Directive-Type Memorandum (DTM) 09-012, "Interim Policy Guidance for DoD Physical Access Control," December 8, 2009. DTM 09-012 requires that DoD installation government representatives query the National Crime Information Center (NCIC) and Terrorist Screening Database to vet the claimed identity and to determine the fitness of non-federal government and non-DoD-issued card holders (i.e. visitors) who are requesting unescorted access to a DoD installation. The minimum criteria to determine the fitness of a visitor is: 1) not on a terrorist watch list; 2) not on an DoD installation debarment list; and 3) not on a FBI National Criminal Information Center (NCIC) felony wants and warrants list. Additionally, SECNAV Memo, Policy for Sex Offender Tracking and Assignment and Access Restrictions within the Department of the Navy, of 7 Oct 08 and OPNAVINST 1752.3 established the Navy's policy on sex offenders, requiring Region Commanders (REGCOMs) and Installation Commanding Officers (COs) to prohibit sex offender access to DoN facilities and Navy owned, leased or PPV housing. This form describes the authority and purpose to collect and share the required information; and identifies the applicant/visitor and sponsor; and authorizes the DoD to perform the minimum vetting and fitness determination criteria. A favorable response on the vetting and fitness determination is required to receive access to DOD-controlled installation/facilities.

Instruction for completing the Local Population Access Registration Form

INSTRUCTIONS: Please complete all information in black ink (printed) or by typing. By voluntarily providing your Personal Information, you agree to the following terms and restrictions:
RESTRICTIONS: Local Population Identification Card/Base Access Pass may only be used by person to whom they are issued and for the specific business/purpose issued. Applicants are reminded that soliciting (i.e., door-to-door sales) is prohibited on the base, and that such activity is grounds for cancellation of the Pass. Additionally, such action may result in debarment from the base and legal action. The Base Commanding Officer has discretion over specifying the period of validity for any Local Population ID Cards/Base Access Passes that are issued under his/her jurisdiction.
Review the Privacy At Statement that is printed at the top of the form

Block 1: Enter the Last Name.
Block 2: Enter the First Name.
Block 3: Enter the Middle Name.
Block 4: If applicable, check the box for Name Suffix.
Block 5: Check the applicable box for Hispanic or Latino.
Block 6: Check the applicable box for Race.
Block 7: Check the applicable box for Gender.
Block 8: Enter Date of Birth.
Block 9: Enter City of Birth.
Block 10: Enter State of Birth.
Block 11: Enter Country of Birth.
Block 12: Check the applicable box for US Citizenship.
Block 13: If not a US Citizen, enter the name of the Country of Citizenship.
Block 14: Two forms of identity source documents from the list of acceptable documents listed below must be presented to the base registrar with this completed form. Check the box for the type of Documents that will be presented for identity proofing. If the document type is not listed, use the two rows under Other Approved Identity Source Documents to enter the type of document(s) that you will present.
Block 15: Enter the Document Number located on the Identity Proofing Source document that was checked in Block 14.
Block 16: Enter the State that issued the Identity Source Document.
Block 17: Enter the Country that issued the Identity Source Document.
Block 18: Enter the Date that the Identity Source Document was issued.
Block 19: Enter the Date that the Identity Source Document will expire.
Block 20: Enter Weight in pounds.
Block 21: Enter Height in inches.
Block 22: Check the applicable box for Hair Color.
Block 23: Check the applicable box for Eye Color.
Block 24: Enter Home Address Including City, State, Zip Code, and Home Telephone Number.
Block 25: Enter Name of Registrant's Base Sponsor and Base Sponsor's Telephone Number.
Block 26: Enter Employer Name and address including City, State, Zip Code, and Employer's Telephone Number.
Block 27: Enter Supervisor's Name including City, State, Zip Code, and Supervisor's Telephone Number.
Block 28: Check the applicable box for Work Hours box or check the OTHER box and enter the work hours, then check applicable boxes for Work Days. Block 28: Check the applicable answer if you have been convicted of Felony and enter initials.
Block 29: Check the applicable box for felony conviction.
Block 30: Enter initials to accept terms for returning Local Population Identification Card.
Block 31: Sign and date the form to attest that the foregoing information is true and complete to best of your knowledge.

LIST OF ACCEPTABLE DOCUMENTS - All documents must not be expired.

Must present one selection from List A or a combination of one selection from List B and one selection from List C.

List A - Documents that Establish Identity and Employment Authorization

1. U.S. Passport or U.S. Passport Card.
2. Permanent Resident Card or Alien Registration Receipt Card (Form I-551).
3. Foreign passport that contains a temporary I-551 stamp or temporary I-551 printed notation on a machine-readable immigrant visa.
4. Employment Authorization Document that contains a photograph (Form I-766).
5. For a nonimmigrant alien authorized to work for a specific employer because of his or her status:
   a. Foreign Passport; and
   b. Form I-94 or Form I-94A that has the following:
      (1) The same name as the passport; and
      (2) An endorsement of the alien's nonimmigrant status as long as that period of endorsement has not yet expired and the proposed employment is not in conflict with and restrictions or limitations identified on form.
6. Passport from the Federal States of Micronesia (FSM) or the Republic of the Marshal Islands (RM) with Form I-94 or Form I-94A indicating nonimmigrant admission under the Compact of Free Association Between the United Stated and FSM or RM.

OR

List B - Documents that Establish Identity

1. Driver's license or ID card issued by a State or outlying possession of the United States provided it contains a photograph or information such as name, date of birth, gender, height, eye color, and address.
2. ID card issued by federal, state or local government agencies or entities, provided it contains a photograph or information such as name, date of birth, gender, height, eye color, and address.
3. School ID card with a photograph
4. Voter's registration card.
5. U.S. Military card or draft record.
6. Military dependent's ID card.
7. U.S. Coast Guard Merchant Mariner Card.
8. Native American tribal document.
9. Driver's license issued by a Canadian government authority.

For persons under age 18 who are unable to present a document listed above:

10. School record or report card.
11. Clinic, doctor, or hospital record.
12 Day-care or nursery school record.

AND

List C - Documents that Establish Employment Authorization

1. A Social Security Account Number card, unless the card includes one of the following restrictions:
   (1) NOT VALID FOR EMPLOYMEMT
   (2) VALID FOR WORK ONY WITH INS AUTHORIZATION.
   (3) VALID FOR WORK ONLY WITH DHS AUTHORIZATION.
2. Certification of Birth Abroad issued by the Department of State (Form FS-545).
3. Certification of Birth issued by the Department of State (Form DS-1360).
4. Original or certified copy of birth certificate issued by a State, county, municipal authority or territory of the United States bearing an official seal.
5. Native American tribal document.
6. U.S. Citizen ID Card (Form I-197).
7. Identification Card for Use of Resident Citizen in the United States (Form I-179).
8. Employment authorization document issued by the Department of Homeland Security.

The remainder of the form will be completed by the Base Registrar Person conducting Identify Proofing process and NCIC check.

AGENCY DISCLOSURE STATEMENT:

The public reporting burden for this collection of information is estimated to average 10 minutes per response, including the time for reviewing instructions, searching existing data sources, gathering and maintaining the data needed, and completing and reviewing the collection of information. Send comments regarding this burden estimate or any other aspect of this collection of information, including suggestions for reducing the burden, to the Department of Defense, Washington Headquarters Services, Executive Services Directorate, Information Management Division, 4800 Mark Center Drive, East Tower, Suite 02G09, Alexandria, VA 22350-3100 OMB 0703-0061. Respondents should be aware that notwithstanding any other provision of law, no person shall be subject to any penalty for failing to comply with a collection of information if it does not display a currently valid OMB control number.

PLEASE DO NOT RETURN COMPLETED FORM TO THE ABOVE ADDRESS.
Completed form should be submitted to the Base Registrar.

Appendix C
Nuclear Density Gauge Documentation

NAVFAC SE CONTRACTOR RADIOGRAPHY SUBMITTALS CHECK LIST

Project/Contract #: _____ **Site Location:** _____

ATTRIBUTE	KO Initials	COT Initials	Date
Contractor has submitted their NRC License. The type and model of the equipment they will be using on the project should be listed in section 9. ** If the contractor has a valid Agreement State License for the Equipment they must also Provide an NRC Form 241 (Report of Proposed Activities in Non-Agreement States, Areas of Exclusive Federal Jurisdiction, or Offshore Waters). **Note:** X-Ray Equipment is not licensed by the NRC. This equipment will be regulated and licensed by applicable State Agencies.			
Contractor has submitted current leak test certification for the equipment they will be using.			
Contractor has submitted training qualifications for the Radiation Safety Officer (RSO) for the project. ** The RSO should be the same as named on the NRC (Agreement State) license.			
Contractor has submitted training qualifications for the equipment operator applicable to the Manufacture and Model of equipment they will be using.			
Contractor has submitted a copy of their Operating and Emergency Procedures. Listing emergency contact numbers for the project.			
Contractor has submitted the appropriate Operations Planning Work Sheet (Gamma Radiography, X-Ray, or Portable Gauge).			

Contracting Officer Name	Signature	Date
Contract Oversight Technician Name	Signature	Date

NAVFAC SE MOISTURE DENSITY GAUGE JOBSITE CHECK SHEET

Project/Contract #: Sediment stabilization treatability test **Site Location: Site 8B**

ATTRIBUTE	COT Initials	Date	Yes	No
COT meets the Portable Gauge Operator at the gate and escorts the operator to the jobsite. (Required on initial jobsite visit only)				
Portable gauge is stored in its locked and properly labeled shipping container. One USA DOT 7A, Type A label and 2 DOT Yellow Radioactive II Labels filled out and affixed to the container. The container is secured in the vehicle with two locking devices (i.e. chains, cables, etc.) that are not easily removable.				
Portable gauge operator has proper DOT shipping documents readily accessible by the driver.				
Portable gauge operator is wearing an operable TLD.				
Portable gauge manufacture operating manual for the gauge is available.				
Company operating and emergency procedures are available				
Operator establishes a 15 foot clearance area to keep all unauthorized persons out of the operating area.				
The portable gauge source rod handle is locked when removed from the case. (Gauge source rod handles are equipped with either a key lock or a padlock slot used to lock the source rod handle in the retracted position).				
The gauge operator uses the portable gauge drill pin guide plate and drill pin to outline and make the test hole for the source rod.				
The gauge operator steps back approximately 10 feet after the test sequence is initiated.				
The gauge operator locks the source rod handle and secures the portable gauge in its shipping container and secures it in the vehicle immediately after completion of the test prior to completing paper work and leaving the jobsite.				
Note: Any step marked No requires the job to be shut down and a RASP Deficiency Report (RDR) filed.				

Contract Oversight Technician Name **Signature** **Date**

NAVFAC SE PORTABLE GAUGE OPERATIONS PLANNING WORK SHEET

Project/Contract #: Sediment stabilization treatability test Site Location: Site 8B

A. General Information:

1. Prime Contractor Name: Resolution Consultants

2. Subcontractor Name (If Applicable)

3. Proposed Date(s) and Times of Planned Radiography:

4. Purpose of Portable Gauge Operation:

5. Host country regulatory standards applicable to radiographic inspections [preferably translated to English]:

B. Portable Gauge Specific Information:

1. Manufacture:

2. Model Number:

3. Serial Number:

4. Source (RAM or X-Ray Tube):

5 Transportation and vehicle information:

i. Manufacture:

ii. Model:

iii. License Plate Number:

iv. Driver's Name

v. Passenger's:

vi. Location of portable gauge operation site (Building, Pier, etc.)

vii. Transportation route to be taken to and from work site while on Government activity:

C. Provide a diagram of each work site that illustrates:

1. Each location of the Portable Gauge use, including major features such as walls, bulkheads, tanks, walkways or passageways that may provide shielding or difficulty in controlling the area. (Diagram attached). NA

D. Review/Approval:

Contractor's Operator Name (Printed)	Signature	Date
Contracting Officer Name (Printed)	Signature	Date
Contract Oversight Ttecnician Name (Printed)	Signature	Date

Appendix D
NAVFAC Excavation Permit

NAVFAC PUBLIC WORKS DEPARTMENT GULFPORT
EXCAVATION PERMIT

Rev. 01 DEC 2014

1. DATE OF REQUEST: _____ 2. PLANNED START DATE: _____

3. MAXIMO SERVICE REQUEST #: _____ 4. CONTRACT #: _____

5. MISSISSIPPI ONE CALL #, CONTACT (800) 227-6477: _____

6. REQUESTING COMPANY / DEPARTMENT: _____

7. COMPANY ADDRESS: _____

8: REQUESTING POC: _____ EMAIL: _____ PHONE: _____

9. SITE LOCATION: _____

10. DESCRIPTION OF WORK: _____

_____

11. PWD / FEAD LIAISON: _____ PHONE: _____

UTILITY	VERIFIED	MARKED	EXCAVATE	COMMENTS
IR SITE	-	-	-	
ELECTRICAL (PWD)	-	-	-	
WATER (PWD)	-	-	-	
SANITARY SEWER (PWD)	-	-	-	
STORM DRAIN (PWD)	-	-	-	
MISC. UTILITIES (PWD)	-	-	-	
TELEPHONE / NAVY (BCO)	-	-	-	
FIBER / NAVY (BCO)	-	-	-	
FIBER / NMCI (BCO)	-	-	-	
GAS / CENTERPOINT (MS811)	-	-	-	
CABLE / CABLEONE (MS811)	-	-	-	
TELEPHONE / ATT (MS811)	-	-	-	
TELEPHONE / SPRINT (MS811)	-	-	-	

12. AUTHORIZED BY: _____ TITLE: _____ DATE: _____

NAVFAC PUBLIC WORKS DEPARTMENT GULFPORT
EXCAVATION PERMIT

Rev. 01 DEC 2014

EXCAVATION PERMIT STANDARD OPERATING PROCEDURE:

BLK-1, Date of Request: Date permit is submitted to NAVFAC Utility Department.
BLK-2, Planned Start Date: Same as initial MS811 request, start dates, 48 hours after the initial call date.
BLK-3, Maximo Service Request: Obtained by the Utility Department.
BLK-4, Contract Number: Applicable if under contract.
BLK-5, Mississippi One Call Number: Attach copy of MS811 sheet to Excavation Request.
BLK-6, Requesting Company / Department: Same as the MS811 Excavation Request.
BLK-7, Company Address: Same as the MS811 Excavation Request.
BLK-8, Requesting POC: Same as the MS811 caller information.
BLK-9, Site Location: Actual work site.
BLK-10, Description Work: Short detailed work description.
BLK-11, Requesting PWD Representative: Public Works Department, FEAD Engineering Technician, PWD WL / WS.
BLK-12, Utility Outage Authorized By: Signature from Production Officer or Designated Representative.

Upon reviewing information type initials on corresponding lines to indicate your acknowledgment of the permit process:

_____ NAVFAC Public Works Department / Naval Construction Battalion Center Gulfport requires all excavations / ground penetrations greater than 6 inches of depth to be approved. Installations under purview of the PWD Department are NCBC Gulfport, Woolmarket Range, and Lakeside Housing. Emergency / Urgent excavation requests are required to be cleared through Gulfport Public Works Utilities Department prior to excavation.
NO EXCAVATION WILL BEGIN WITHOUT AN APPROVED EXCAVATION PERMIT.

_____ In accordance with Mississippi Law. Mississippi One Call Center (MS811) permits are valid for 10 work days from initial call date. Requester is responsible to renew the MS811 locate request prior to expiration. Requester shall ensure locate request is renewed with no lapse thereafter as long as the construction site remains an active / approved excavation site.

_____ Boundaries of excavation shall be clearly marked with painted white lines. In the event the requested excavation site boundaries are not clearly white lined permit will be rejected and returned to requester. An excavation permit is required for each excavation site area. Permit for multiple sites will not be accepted.

_____ Planned work start date shall be at a minimum of 10 working days from date that initial excavation permit is submitted to PWD Utilities Department.

_____ Upon release of the approved excavation permit by the PWD Utilities Department the construction site is considered under the control of the requester (within area of approved excavation boundaries). PWD permits are considered valid through the completion of the construction project, MS811 renewal requirements are 10 working days. Initial utility markings become the responsibility of the requester to maintain in the paint colors as outlined. Electric -- Red, Water -- Blue, Sewage -- Green, Storm Drainage -- Green, Gas -- Yellow, Communication -- Orange.

_____ New Orleans Base Communication Officer (BCO) performs utility locates for Navy communication cable. BCO provides positive notification regarding communication lines in area of excavation. BCO locate process is 10 working days from receipt of locate request from PWD Gulfport.

_____ Excavation Permit submission:
1. Submit fillable PDF Excavation Permit via email for approval.
2. Print site excavation area using an updated base map (recommend the use of Adobe Acrobat Professional).
3. Map of excavation site shall provide clearly defined details and be attached as an enclosure to the excavation permit.
4. MS811 Locate Request shall be attached to PDF Excavation permit as an enclosure to the excavation permit.
5. Further questions contact. Mark Bierschenk, Building 322, (228) 871-2188, mark.j.bierschenk@navy.mil

I have read and understand the excavation permit requirements.

LEFT CLICK TO SUBMIT

Appendix E
ASTM Standards

Designation: D558 – 11

Standard Test Methods for Moisture-Density (Unit Weight) Relations of Soil-Cement Mixtures [1]

This standard is issued under the fixed designation D558; the number immediately following the designation indicates the year of original adoption or, in the case of revision, the year of last revision. A number in parentheses indicates the year of last reapproval. A superscript epsilon (ε) indicates an editorial change since the last revision or reapproval.

This standard has been approved for use by agencies of the U.S. Department of Defense.

1. Scope*

1.1 These test methods cover the determination of the relationship between the water content and the density of soil-cement mixtures when compacted before cement hydration as prescribed.

1.2 A 1/30-ft^3 (944-cm^3) mold and a 5.50-lbf (24.5-N or mass of 2.49-kg) rammer dropped from a height of 12.0 in. (30.5 cm) are used and two methods, depending on soil gradation, are covered, as follows:

	Sections
Test Method A, using soil material passing a No. 4 (4.75-mm) sieve. This method shall be used when 100 % of the soil sample passes the No. 4 (4.75-mm) sieve	7
Test Method B, using soil material passing a ¾-in. (19.0-mm) sieve. This method shall be used when part of the soil sample is retained on the No. 4 (4.75-mm) sieve. This test method may be used only on materials with 30 % or less retained on the ¾-in. (19.0-mm) sieve	8

1.3 All observed and calculated values shall conform to the guidelines for significant digits and rounding established in Practice D6026.

1.4 The values stated in inch-pound units are to be regarded as standard, except as noted below. The values given in parentheses are mathematical conversions to SI units that are provided for information only and are not considered standard.

1.4.1 The gravitational system of inch-pound units is used when dealing with inch-pound units. In this system, the pound (lbf) represents a unit of force (weight), while the unit for mass is slugs.

1.4.2 The slug unit of mass is almost never used in commercial practice (density, scales, balances, etc.). Therefore, the standard unit for mass in this standard is either kilogram (kg) or gram (g) or both. Also, the equivalent inch-pound unit (slug) is not given.

1.4.3 It is common practice in the engineering/construction profession to concurrently use pounds to represent both a unit of mass (lbm) and of force (lbf). This implicitly combines two separate systems of units; that is, the absolute system and the gravitational system. It is scientifically undesirable to combine the use of two separate sets of inch-pound units within a single standard. As stated in 1.4.2, this standard includes the gravitational system of inch-pound units and does not use/present the slug unit for mass. However, the use of balances or scales recording pounds of mass (lbm) or recording density in lbm/ft^3 shall not be regarded as nonconformance with this standard.

1.5 *This standard does not purport to address all of the safety concerns, if any, associated with its use. It is the responsibility of the user of this standard to establish appropriate safety and health practices and determine the applicability of regulatory limitations prior to use.*

2. Referenced Documents

2.1 *ASTM Standards:*[2]

C150 Specification for Portland Cement

C595 Specification for Blended Hydraulic Cements

D559 Test Methods for Wetting and Drying Compacted Soil-Cement Mixtures (Withdrawn 2012)[3]

D560 Test Methods for Freezing and Thawing Compacted Soil-Cement Mixtures (Withdrawn 2012)[3]

D653 Terminology Relating to Soil, Rock, and Contained Fluids

D698 Test Methods for Laboratory Compaction Characteristics of Soil Using Standard Effort (12 400 ft-lbf/ft^3 (600 kN-m/m^3))

D2168 Practices for Calibration of Laboratory Mechanical-Rammer Soil Compactors

D2216 Test Methods for Laboratory Determination of Water (Moisture) Content of Soil and Rock by Mass

D3740 Practice for Minimum Requirements for Agencies Engaged in Testing and/or Inspection of Soil and Rock as Used in Engineering Design and Construction

[1] These test methods are under the jurisdiction of ASTM Committee D18 on Soil and Rock and are the direct responsibility of Subcommittee D18.15 on Stabilization With Admixtures.

Current edition approved Jan. 1, 2011. Published February 2011. Originally approved in 1938. Last previous edition approved in 2003 as D558–03. DOI: 10.1520/D0558-11.

[2] For referenced ASTM standards, visit the ASTM website, www.astm.org, or contact ASTM Customer Service at service@astm.org. For *Annual Book of ASTM Standards* volume information, refer to the standard's Document Summary page on the ASTM website.

[3] The last approved version of this historical standard is referenced on www.astm.org.

***A Summary of Changes section appears at the end of this standard**

Copyright © ASTM International, 100 Barr Harbor Drive, PO Box C700, West Conshohocken, PA 19428-2959. United States

Copyright by ASTM Int'l (all rights reserved); Tue Nov 25 13:31:25 EST 2014
Downloaded/printed by
Paul Jobmann (none) pursuant to License Agreement. No further reproductions authorized.

D4753 Guide for Evaluating, Selecting, and Specifying Balances and Standard Masses for Use in Soil, Rock, and Construction Materials Testing
D6026 Practice for Using Significant Digits in Geotechnical Data
E11 Specification for Woven Wire Test Sieve Cloth and Test Sieves
E145 Specification for Gravity-Convection and Forced-Ventilation Ovens

3. Terminology

3.1 For common definitions of terms used in this standard, refer to Terminology D653.

4. Significance and Use

4.1 These tests determine the optimum water content and maximum density (unit weight) to be used for molding soil-cement specimens in accordance with Test Methods D559 and D560.

NOTE 1—Since these tests are used in conjunction with Test Methods D559 and D560 and the criteria referenced therein, the test differs in several aspects from Test Method D698. There are three main differences between this standard and Test Method D698. Firstly, this standard allows a maximum particle size of ¾-in. (19.0 mm) for a 4-in. (101.6-mm) mold while Test Method D698 allows a maximum particle size of ⅜-in. (9.5-mm) for the same size mold. Secondly, this standard permits the material leftover after the water content specimen has been obtained to be mixed with the rest of the sample and reused for the next determination. Test Method D698 does not permit the material to be reused. Thirdly, this standard allows the material that is retained on the ¾-in. (19.0-mm) and passing the 3-in. (75-mm) to be discarded (scalping technique) and replaced with an equal mass of material that passes the ¾-in. (19.0-mm) sieve and is retained on the No.4 (4.75-mm) sieve. Test Method D698 does not permit the scalp and replacement technique.

NOTE 2—The quality of the result produced by this standard is dependent on the competence of the personnel performing it, and the suitability of the equipment and facilities used. Agencies that meet the criteria of Practice D3740 are generally considered capable of competent and objective testing/sampling/inspection/etc. Users of this standard are cautioned that compliance with Practice D3740 does not in itself assure reliable results. Reliable results depend on many factors; Practice D3740 provides a means of evaluating some of those factors.

5. Apparatus

5.1 *Mold*—A cylindrical metal mold having a volume of 1/30 ± 0.00040 ft^3 (944 ± 11 cm^3) with an internal diameter of 4.0 ± 0.016 in. (101.60 ± 0.41 mm) and conforming to Fig. 1 to permit preparing compacted specimens of soil-cement mixtures of this size. The mold shall be provided with a detachable collar assembly approximately 2½-in. (63.5 mm) in height. The mold may be of the split type consisting of two half-round sections or section of pipe with one side split perpendicular to the pipe circumference and that can be securely locked in place to form a closed cylinder having the dimensions described above. The mold and collar assembly shall be so constructed that it can be fastened firmly to a detachable base (Fig. 1).

5.2 *Rammer*—A rammer, either manually operated as described further in 5.2.1 or mechanically operated as described in 5.2.2. The rammer shall fall freely through a distance of 12.00 ± 0.05 in. (304.8 ± 1 mm) from the surface of the specimen. The weight of the rammer shall be 5.50 ± 0.02 lbf (24.47 ± 0.09 N, or mass of 2.495 ± 0.023 kg), except that the weight of the mechanical rammers may be adjusted as described in Practices D2168 (See Note 3). The striking face of the rammer shall be planar and circular, except as noted in 5.2.2, with a diameter when new of 2.000 ± 0.005 in. (50.80 ± 0.13 mm). The rammer shall be replaced if the striking face becomes worn or bellied to the extent that the diameter exceeds 2.000 ± 0.01 in. (50.80 ± 0.25 mm).

NOTE 3—It is a common and acceptable practice to determine the weight of the rammer using either a kilogram or pound balance and assume 1 lbf is equivalent to 0.4536 kg, 1 lbf is equivalent to 1 lbm, or 1 N is equivalent to 0.2248 lbf or 0.1020 kg.

5.2.1 *Manual Rammer*—The rammer shall be equipped with a guide sleeve that has sufficient clearance that the free fall of the rammer shaft and head is not restricted. The guide sleeve shall have at least four vent holes at each end (eight holes total) located with centers ¾ ± 1/16 in. (19.0 ± 2 mm) from each end and spaced 90 degrees apart. The minimum diameter of the vent holes shall be ⅜ in. (9.5 mm). Additional holes or slots may be incorporated in the guide sleeve.

5.2.2 *Mechanical Rammer-Circular Face*—The rammer shall operate mechanically in such a manner as to provide uniform and complete coverage of the specimen surface. There shall be 0.10 ± 0.03 in. (2.5 ± 0.8mm) clearance between the rammer and the inside surface of the mold at its smallest diameter. The mechanical rammer shall meet the standardization/calibration requirements of Practices D2168. The mechanical rammer shall be equipped with a positive mechanical means to support the rammer when not in operation.

5.2.3 *Mechanical Rammer-Sector Face (See Note 4)*—When used with the 6 in. (152.4 mm) mold, a sector face rammer may be used in place of the circular face rammer. The use of a sector face rammer should be noted in the test report. The specimen contact face shall have the shape of a sector of a circle of radius equal to 2.90 ± 0.02 in. (73.7 ± 0.5 mm). The rammer shall operate in such a manner that the vertex of the sector is positioned at the center of the specimen.

NOTE 4—The sector face rammer shall not be used to compact test specimens in accordance with Test Methods D559 and D560, unless previous tests on like soils show strength and resistance to wetting-and-drying and freezing-and-thawing of specimens compacted with this rammer are similar to that of specimens compacted with the circular face rammer.

5.3 *Sample Extruder*—A jack, lever frame, or other device adapted for the purpose of extruding compacted specimens from the mold. Not required when a split-type mold is used.

5.4 *Balances*—A balance or scale conforming to the requirements of Class GP5 with a readability of 1g in Specification D4753, except that a Class GP2 balance of 0.1g readability is required for water content determination.

5.5 *Drying Oven*—Thermostatically controlled, preferably of the forced-draft type, meeting the requirements of Specification E145 and capable of maintaining a uniform temperature of 230 ± 9 °F (110 ± 5 °C) throughout the drying chamber.

5.6 *Straightedge*—A stiff steel straightedge of any convenient length but not less than 10-in. (254-mm). The total length

Copyright by ASTM Int'l (all rights reserved); Tue Nov 25 13:31:25 EST 2014
Downloaded/printed by
Paul Jobmann (none) pursuant to License Agreement. No further reproductions authorized.

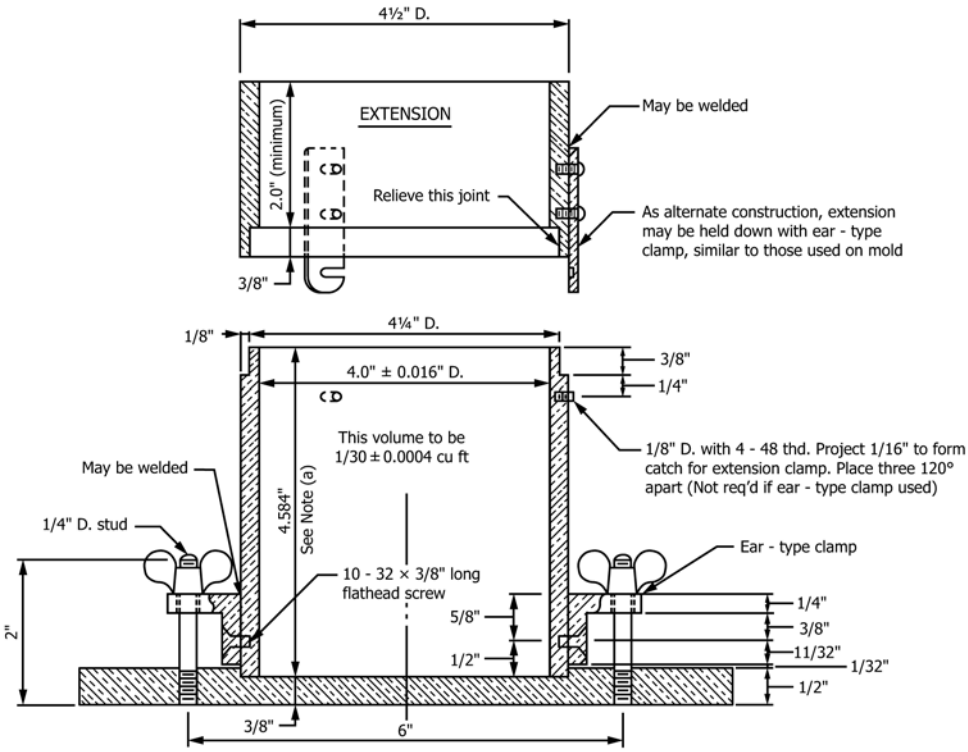

Metric Equivalents

in.	mm
0.016	0.41
0.026	0.66
1/32	0.80
1/16	1.6
1/8	3.2
1/4	6.4
11/32	8.7
3/8	9.5
1/2	12.7
5/8	15.9
2	50.8
2½	63.5
4	101.6
4¼	108.0
4½	114.3
4.584	116.43
6	152.4
6½	165.1
8	203.2
ft^3	cm
1/30	944
0.004	11
1/13.333	2124
0.0009	25

NOTE 1—(a)—The tolerance on the height is governed by the allowable volume and diameter tolerances.

NOTE 2—(b)—The methods shown for attaching the extension collar to the mold and the mold to the base plate are recommended. However, other methods are acceptable, providing the attachments are equally as rigid as those shown.

FIG. 1 Cylindrical Mold

of the straightedge shall be machined straight to a tolerance of ± 0.005-in. (± 0.1-mm). The scraping edge shall be beveled if it is thicker than ⅛-in. (3-mm).

5.7 *Sieves*—3-in. (75-mm), ¾-in. (19.0-mm), and No. 4 (4.75-mm) sieves conforming to the requirements of Specification E11.

Copyright by ASTM Int'l (all rights reserved); Tue Nov 25 13:31:25 EST 2014
Downloaded/printed by
Paul Jobmann (none) pursuant to License Agreement. No further reproductions authorized.

5.8 *Mixing Tools*—Miscellaneous tools such as mixing pan, spoon, trowel, and spatula, or a suitable mechanical device for thoroughly mixing the sample of soil with cement and with increments of water.

5.9 *Container*—A flat, round pan for moisture absorption by soil-cement mixtures, about 12 in. (305 mm) in diameter and 2 in. (50 mm) deep.

5.10 *Water Content Cans*—Suitable containers made of material resistant to corrosion and change in mass upon repeated heating, cooling, exposure to materials of varying pH, and cleaning. Unless a desiccator is used, containers with close fitting lids shall be used for testing specimens having a mass of about 200 g; while for specimens having a mass greater than about 200g, containers without lids may be used. One container is needed for each water content determination.

5.11 *Butcher Knife*—A butcher knife approximately 10 in. (250 mm) in length for trimming the top of the specimens.

6. Calibration

6.1 Perform calibrations before initial use, after repairs or other occurrences that might affect the test results, at intervals not exceeding 1,000 test specimens, or annually, whichever occurs first, for the following apparatus:

6.1.1 *Balance*—Evaluate in accordance with Specification D3740.

6.1.2 *Molds*—Determine the volume as described in D698, Annex 1.

6.1.3 *Manual Rammer*—Verify the free fall distance, rammer mass, and rammer force in accordance with 5.2. Verify the sleeve requirements in accordance with 5.2.1.

6.1.4 *Mechanical Rammer*—Calibrate and adjust the mechanical rammer in accordance with Practices D2168.

7. Test Method A, Using Soil Material Passing a No. 4 (4.75-mm) Sieve

7.1 *Sample:*

7.1.1 Prepare the sample for testing by breaking up the soil aggregations to pass the No. 4 (4.75-mm) sieve in such a manner as to avoid reducing the natural size of the individual particles. When necessary, first dry the sample until it is friable under a trowel. Drying may be accomplished by air drying or by the use of drying apparatus such that the temperature of the sample does not exceed 140 °F (60 °C).

7.1.2 Select a representative sample, having a mass of approximately 6.0 lbm (2.7 kg) or more, of the soil prepared as described in 7.1.1.

7.2 *Procedure:*

7.2.1 Add to the soil the required amount of cement conforming to Specification C150 or Specification C595. Mix the cement and soil thoroughly to a uniform color.

7.2.2 When needed, add sufficient potable water to dampen the mixture to approximately four to six percentage points below the estimated optimum water content and mix thoroughly. At this water content, plastic soils, tightly squeezed in the palm of the hand, will form a cast that will fracture with only slight pressure applied by the thumb and fingertips; nonplastic soils will bulk noticeably.

7.2.3 When the soil is a clayey material, compact the mixture of soil, cement, and water in the container to a depth of about 2 in. (50 mm) using the rammer described in 5.2 or a similar hand tamper. Cover, and allow to stand for not less than 5 min but not more than 10 min to aid dispersion of the moisture and to permit more complete absorption by the soil-cement.

7.2.4 After the absorption period, thoroughly break up the mixture, without reducing the natural size of individual particles, until it will pass a No. 4 (4.75-mm) sieve and then remix.

7.2.5 Form a specimen by compacting the prepared soil-cement mixture in the mold, with the collar attached, in three equal layers so as to give a total compacted depth of about 5 in. (130 mm). Compact each layer by 25 blows from the rammer dropping free from a height of 12 in. (305 mm) above the elevation of the soil-cement when a sleeve-type rammer is used, or from 12 in. (305 mm) above the approximate elevation of each finally compacted layer when a stationary-mounted type rammer is used. The blows shall be uniformly distributed over the surface of the layer being compacted. During compaction, the mold shall rest on a uniform, rigid foundation such as provided by a cylinder or a cube of concrete with a mass not less than 200 lbm (91 kg).

7.2.6 Remove the extension collar after compaction and carefully trim the compacted mixture even with the top of the mold by means of a knife and straightedge. Determine and record the mass of the mixture and mold to four significant digits.

7.2.7 Remove the material from the mold and slice vertically through the center. Take a representative sample of the material, weighing not less than 0.2 lbm (100 g), from the full height of one of the cut faces. Immediately, determine and record the mass of the moist material and container to four significant digits. Dry in an oven at 230 ± 9 °F (110 ± 5 °C) for at least 12 hours or to a constant mass. Determine the mass of the dry soil and container to four significant digits.

7.2.8 Thoroughly break up the remainder of the material as before until it will pass a No. 4 (4.75-mm) sieve, as judged by eye, and add all other material remaining after obtaining the moisture sample.

7.2.9 Add water in sufficient amount to increase the water content of the soil-cement mixture by one or two percentage points, mix, and repeat the procedure given in 7.2.5 – 7.2.8 for each increment of water added.

7.2.10 Continue this series of determinations until there is either a decrease or no change in the mass of the moist material and mold.

NOTE 5—This procedure has been found satisfactory in most cases. However, in instances where the soil material is fragile in character and will reduce significantly in grain size due to repeated compaction, a separate and new sample shall be used for each moisture-density (unit weight) determination.

NOTE 6—To minimize the effect of cement hydration, perform the test expeditiously and continuously to completion.

8. Test Method B, Using Soil Material Passing a ¾-in. (19.0-mm) Sieve

8.1 *Sample:*

Copyright by ASTM Int'l (all rights reserved); Tue Nov 25 13:31:25 EST 2014
Downloaded/printed by
Paul Jobmann (none) pursuant to License Agreement. No further reproductions authorized.

8.1.1 Prepare the sample for testing by segregating the aggregate retained on a No. 4 (4.75-mm) sieve and breaking up the remaining soil aggregations to pass the No. 4 (4.75-mm) sieve in such a manner as to avoid reducing the natural size of individual particles. When necessary, first dry the sample until it is friable under a trowel. Drying may be accomplished by air drying or by the use of drying apparatus such that the temperature of the sample does not exceed 140 °F (60 °C).

8.1.2 Sieve the prepared soil over the 3-in. (75-mm) (Note 2), ¾-in., (19.0-mm), and No. 4 (4.75-mm) sieves. Discard the material retained on the 3-in. (75-mm) sieve. Determine the percentage of material, by oven-dry mass, retained on the ¾-in. (19.0-mm) and No. 4 sieves.

8.1.3 Saturate the aggregate passing the ¾-in. (19.0-mm) sieve and retained on the No. 4 (4.75-mm) sieve by soaking in potable water; surface-dry the material as required for later testing.

NOTE 7—Most soil-cement construction specifications covering soil gradation limit maximum size material to 3 in. (75 mm) or less.

8.1.4 Select and maintain separate representative samples of soil passing the No. 4 (4.75-mm) sieve and of saturated, surface-dry aggregate passing the ¾-in. (19.0-mm) sieve and retained on the No. 4 sieve so that the total sample will weigh approximately 11 lbm (5 kg) or more. The percentage, by oven-dry mass, of aggregate passing the ¾-in. (19.0-mm) sieve and retained on the No. 4 (4.75-mm) sieve shall be the same as the percentage passing the 3-in. (75-mm) sieve and retained on the No. 4 sieve in the original sample.

Original Gradation		Correction Factor	Corrected Percent Passing	Sample Builder for 5,000 g	Cumulative Build, g	Build Gradation
Sieve Size	Percent Passing					Sieve Size
1 ½ in. (37.5 mm)	100					
1 in. (25.0 mm)	96					
¾ in. (19.0 mm)	80	100/80 = 1.25	80 × 1.25 = 100	5,000	5,000 × 100 % = 5,000	½ in. (12.5 mm)
½ in. (12.5 mm)	76	1.25	76 × 1.25 = 95.0	5,000	5,000 × 95.0 % = 4,750	⅜ in. (9.5 mm)
⅜ in. (9.5 mm)	68	1.25	68 × 1.25 = 85.0	5,000	5,000 × 85.0 % = 4,250	No. 4 (4.75 mm)
No. 4 (4.75 mm)	63	1.25	63 × 1.25 = 78.8	5,000	5,000 × 78.8 % = 3,940	< No. 4 (< 4.75 mm)

8.2 *Procedure:*

8.2.1 Add to the portion of the soil sample passing the No. 4 sieve, the amount of cement conforming to Specification C150 or Specification C595, required for the total sample specified in 8.1.4. Mix the cement and soil thoroughly to a uniform color.

8.2.2 When needed, add water to this soil-cement mixture and facilitate moisture dispersion as described for Method A in 7.2.2 – 7.2.4. After this preparation, add the saturated, surface-dry aggregate to the soil-cement mixture passing the No. 4 (4.75-mm) sieve and mix thoroughly.

8.2.3 Form a specimen by compacting the prepared soil-cement mixture in the mold (with the collar attached) and trim the compacted specimen as described for Method A in 7.2.5 and 7.2.6. During the trimming operation remove all particles that extend above the top level of the mold. Correct all irregularities in the surface by hand-tamping fine material into these irregularities and leveling the specimen again with the straightedge. Determine and record the mass of the mixture and the mold to four significant digits.

8.2.4 Remove the material from the mold and take a sample for determining the water content as described for Method A in 7.2.7 except that the water content sample shall have a mass of at least 1.1 lbm (500 g). Record the result as the water content, *w*, of the compacted soil-cement mixture.

8.2.5 Thoroughly break up the remainder of the material as before until it will pass a ¾-in. (19.0-mm) sieve and at least 90 % of the soil particles smaller than a No. 4 (4.75-mm) sieve will pass a No. 4 sieve, as judged by eye, and add all other material remaining after obtaining the water content sample.

8.2.6 Add sufficient water to increase the water content of the soil-cement mixture by one or two percentage points, mix, and repeat the procedure described in 8.2.3 – 8.2.5 for each increment of water added. Continue this series of determinations until there is either a decrease or no change in the mass of the moist material and the mold (Note 4 and Note 5).

9. Calculations

9.1 Calculate the volume of the mold used to compact the soil-cement mixture for each trial in accordance with Test Method D698, Annex A1, to four significant digits.

9.2 Calculate the water content of the soil-cement mixture for each trial in accordance with D2216 to 0.1 %.

9.3 Calculate the moist density (Eq 1), the dry density (Eq 2), and then the dry unit weight (Eq 3) to the nearest 0.1 lbf/ft^3 for each trial as follows:

$$\rho_m = \frac{(M_m - M_{md})}{V} \tag{1}$$

where:

ρ_m = moist density of compacted soil-cement specimen, lbm/ft^3 (kg/m^3),
M_m = mass of moist specimen and mold, lbm (kg),
M_{md} = mass of compaction mold, lbm (kg), and
V = volume of compaction, ft^3 (m^3) (See Test Method D698, Annex A1).

$$\rho_d = \frac{\rho_m}{\left(1 + \frac{w}{100}\right)} \tag{2}$$

where:

ρ_d = dry density of compacted soil-cement specimen, lbm/ft^3 (kg/m^3),
ρ_m = moist density of compacted soil-cement specimen, lbm/ft^3 (kg/m^3), and
w = water content, %.

$$\gamma_d = \frac{\rho_d\, g}{g_c}\,[U.S.] \tag{3}$$

or

$$\gamma_d = \rho_d\, g\,[SI] \tag{4}$$

Copyright by ASTM Int'l (all rights reserved); Tue Nov 25 13:31:25 EST 2014
Downloaded/printed by
Paul Jobmann (none) pursuant to License Agreement. No further reproductions authorized.

where:

g = acceleration of gravity, 32.2 ft/sec^2 (9.81 m/sec^2)
g_c = gravitational constant, 32.2 ft-lbm/lbf-sec^2
γ_d = dry unit weight of compacted soil-cement specimen

10. Moisture-Density (Unit Weight) Relationship

10.1 The values of water content and dry unit weight calculated in Section 9 for each compacted soil-cement specimen are then plotted. The dry unit weight in lbf/ft ^{3} shall be plotted to the nearest 0.1 lbf/ft^3 on the ordinate scale and the corresponding water content to the nearest 0.1 % on the abscissa scale. Draw the compaction curve as a smooth curve through the plotted points.

NOTE 8—Experience has shown that it is very important to use consistent scales when plotting these curves. One satisfactory approach is to plot the dry unit weight using a scale of 1" = 5 lbf/ft^3 for the ordinate and the water content using a scale of 1" = 2 % as the abscissa.

10.2 *Optimum Water Content, w_o*—The water content corresponding to the peak of the curve plotted according to 10.1 shall be termed the " optimum water content" of the soil-cement mixture under the compaction process described in these methods.

10.3 *Maximum Dry Unit Weight, γ_{dmax}*—The dry unit weight, in lbf/ft^3 corresponding to the optimum water content shall be termed "maximum dry unit weight" under the compaction process described in these test methods.

11. Report

11.1 The report shall include the following:

11.1.1 Sample identification (i.e., sample number, project, location, depth, etc.),

11.1.2 Procedure used (Method A or Method B),

11.1.3 Optimum water content, to the nearest 0.5 %,

11.1.4 Maximum dry unit weight, to the nearest 0.5 lbf/ft^3, and

11.1.5 Compaction curve plot showing compaction points used to establish the compaction curve, point of maximum dry unit weight and optimum water content.

12. Precision and Bias

12.1 *Precision*—Test data on precision are not presented due to the nature of the materials being tested by this test method. It is either not feasible or too costly at this time to have ten or more laboratories participate in a round-robin testing program. Subcommittee D 18.15 is seeking any data from the users of this test method that might be used to make a limited statement on precision.

12.2 *Bias*—There are no accepted reference values for this test method, therefore, bias cannot be determined.

13. Keywords

13.1 compaction; dry density; optimum water content; soil-cement; soil-stabilization; unit weight

SUMMARY OF CHANGES

Committee D18 has identified the location of selected changes to these test methods since the last issue, D558–04, that may impact the use of these test methods. (Approved January 1, 2011)

(*1*) Revised Sections 1, 5, 7, 8, and 9 to include both inch-pound and SI units.
(*2*) Added text to 5.2 so the rammer specifications are consistent with Test Method D698.
(*3*) Added new Note 3 under 5.2 and renumbered subsequent notes.
(*4*) Revised 5.2.1 so the manual rammer specifications are consistent with Test Method D698.
(*5*) Revised 5.2.2 so the mechanical rammer-circular face specifications are consistent with Test Method D698.

ASTM International takes no position respecting the validity of any patent rights asserted in connection with any item mentioned in this standard. Users of this standard are expressly advised that determination of the validity of any such patent rights, and the risk of infringement of such rights, are entirely their own responsibility.

This standard is subject to revision at any time by the responsible technical committee and must be reviewed every five years and if not revised, either reapproved or withdrawn. Your comments are invited either for revision of this standard or for additional standards and should be addressed to ASTM International Headquarters. Your comments will receive careful consideration at a meeting of the responsible technical committee, which you may attend. If you feel that your comments have not received a fair hearing you should make your views known to the ASTM Committee on Standards, at the address shown below.

This standard is copyrighted by ASTM International, 100 Barr Harbor Drive, PO Box C700, West Conshohocken, PA 19428-2959, United States. Individual reprints (single or multiple copies) of this standard may be obtained by contacting ASTM at the above address or at 610-832-9585 (phone), 610-832-9555 (fax), or service@astm.org (e-mail); or through the ASTM website (www.astm.org). Permission rights to photocopy the standard may also be secured from the Copyright Clearance Center, 222 Rosewood Drive, Danvers, MA 01923, Tel: (978) 646-2600; http://www.copyright.com/

Copyright by ASTM Int'l (all rights reserved); Tue Nov 25 13:31:25 EST 2014
Downloaded/printed by
Paul Jobmann (none) pursuant to License Agreement. No further reproductions authorized.

Designation: D1557 – 12

Standard Test Methods for Laboratory Compaction Characteristics of Soil Using Modified Effort (56,000 ft-lbf/ft^3 (2,700 kN-m/m^3))[1]

This standard is issued under the fixed designation D1557; the number immediately following the designation indicates the year of original adoption or, in the case of revision, the year of last revision. A number in parentheses indicates the year of last reapproval. A superscript epsilon (ε) indicates an editorial change since the last revision or reapproval.

This standard has been approved for use by agencies of the Department of Defense.

1. Scope*

1.1 These test methods cover laboratory compaction methods used to determine the relationship between molding water content and dry unit weight of soils (compaction curve) compacted in a 4- or 6-in. (101.6- or 152.4-mm) diameter mold with a 10.00-lbf. (44.48-N) rammer dropped from a height of 18.00 in. (457.2 mm) producing a compactive effort of 56 000 ft-lbf/ft^3 (2700 kN-m/m^3).

NOTE 1—The equipment and procedures are the same as proposed by the U.S. Corps of Engineers in 1945. The modified effort test (see 3.1.3) is sometimes referred to as the Modified Proctor Compaction Test.

1.1.1 Soils and soil-aggregate mixtures are to be regarded as natural occurring fine- or coarse-grained soils, or composites or mixtures of natural soils, or mixtures of natural and processed soils or aggregates such as gravel or crushed rock. Hereafter referred to as either soil or material.

1.2 These test methods apply only to soils (materials) that have 30 % or less by mass of their particles retained on the ¾-in. (19.0-mm) sieve and have not been previously compacted in the laboratory; that is, do not reuse compacted soil.

1.2.1 For relationships between unit weights and molding water contents of soils with 30 % or less by weight of material retained on the ¾-in. (19.0-mm) sieve to unit weights and molding water contents of the fraction passing the ¾-in. (19.0-mm) sieve, see Practice D4718.

1.3 Three alternative methods are provided. The method used shall be as indicated in the specification for the material being tested. If no method is specified, the choice should be based on the material gradation.

1.3.1 *Method A:*

1.3.1.1 *Mold*—4-in. (101.6-mm) diameter.

1.3.1.2 *Material*—Passing No. 4 (4.75-mm) sieve.

1.3.1.3 *Layers*—Five.

1.3.1.4 *Blows per layer*—25.

1.3.1.5 *Usage*—May be used if 25 % or less by mass of the material is retained on the No. 4 (4.75-mm) sieve. However, if 5 to 25 % by mass of the material is retained on the No. 4 (4.75-mm) sieve, Method A can be used but oversize corrections will be required (See 1.4) and there are no advantages to using Method A in this case.

1.3.1.6 *Other Use*—If this gradation requirement cannot be met, then Methods B or C may be used.

1.3.2 *Method B:*

1.3.2.1 *Mold*—4-in. (101.6-mm) diameter.

1.3.2.2 *Material*—Passing ⅜-in. (9.5-mm) sieve.

1.3.2.3 *Layers*—Five.

1.3.2.4 *Blows per layer*—25.

1.3.2.5 *Usage*—May be used if 25 % or less by mass of the material is retained on the ⅜-in. (9.5-mm) sieve. However, if 5 to 25 % of the material is retained on the ⅜-in. (9.5-mm) sieve, Method B can be used but oversize corrections will be required (See 1.4). In this case, the only advantages to using Method B rather than Method C are that a smaller amount of sample is needed and the smaller mold is easier to use.

1.3.2.6 *Other Usage*—If this gradation requirement cannot be met, then Method C may be used.

1.3.3 *Method C:*

1.3.3.1 *Mold*—6-in. (152.4-mm) diameter.

1.3.3.2 *Material*—Passing ¾-in. (19.0-mm) sieve.

1.3.3.3 *Layers*—Five.

1.3.3.4 *Blows per layer*—56.

1.3.3.5 *Usage*—May be used if 30 % or less (see 1.4) by mass of the material is retained on the ¾-in. (19.0-mm) sieve.

1.3.4 The 6-in. (152.4-mm) diameter mold shall not be used with Method A or B.

NOTE 2—Results have been found to vary slightly when a material is tested at the same compactive effort in different size molds, with the smaller mold size typically yielding larger values of unit weight and density (**1**).[2]

1.4 If the test specimen contains more than 5 % by mass of oversize fraction (coarse fraction) and the material will not be

[1] These test methods are under the jurisdiction of ASTM Committee D18 on Soil and Rock and are the direct responsibility of Subcommittee D18.03 on Texture, Plasticity and Density Characteristics of Soils.

Current edition approved May 1, 2012. Published June 2012. Originally approved in 1958. Last previous edition approved in 2007 as D1557 – 09. DOI: 10.1520/D1557-12.

[2] The boldface numbers in parentheses refer to the list of references at the end of this standard.

***A Summary of Changes section appears at the end of this standard**

Copyright © ASTM International, 100 Barr Harbor Drive, PO Box C700, West Conshohocken, PA 19428-2959. United States

Copyright by ASTM Int'l (all rights reserved); Fri Nov 21 11:39:33 EST 2014
Downloaded/printed by
Paul Jobmann (none) pursuant to License Agreement. No further reproductions authorized.

included in the test, corrections must be made to the unit weight and molding water content of the test specimen or to the appropriate field in-place unit weight (or density) test specimen using Practice D4718.

1.5 This test method will generally produce a well-defined maximum dry unit weight for non-free draining soils. If this test method is used for free-draining soils the maximum unit weight may not be well defined, and can be less than obtained using Test Methods D4253.

1.6 All observed and calculated values shall conform to the guidelines for significant digits and rounding established in Practice D6026, unless superseded by these test methods.

1.6.1 For purposes of comparing measured or calculated value(s) with specified limits, the measured or calculated value(s) shall be rounded to the nearest decimal or significant digits in the specified limits.

1.6.2 The procedures used to specify how data are collected/recorded or calculated in this standard are regarded as the industry standard. In addition, they are representative of the significant digits that generally should be retained. The procedures used do not consider material variation, purpose for obtaining the data, special purpose studies, or any considerations for the user's objectives; it is common practice to increase or reduce significant digits of reported data to be commensurate with these considerations. It is beyond the scope of these test methods to consider significant digits used in analytical methods for engineering design.

1.7 The values in inch-pound units are to be regarded as the standard. The values stated in SI units are provided for information only, except for units of mass. The units for mass are given in SI units only, g or kg.

1.7.1 It is common practice in the engineering profession to concurrently use pounds to represent both a unit of mass (lbm) and a force (lbf). This implicitly combines two separate systems of units; that is, the absolute system and the gravitational system. It is scientifically undesirable to combine the use of two separate sets of inch-pound units within a single standard. These test methods have been written using the gravitational system of units when dealing with the inch-pound system. In this system, the pound (lbf) represents a unit of force (weight). However, the use of balances or scales recording pounds of mass (lbm) or the recording of density in lbm/ft^3 shall not be regarded as a nonconformance with this standard.

1.8 *This standard does not purport to address all of the safety concerns, if any, associated with its use. It is the responsibility of the user of this standard to establish appropriate safety and health practices and determine the applicability of regulatory limitations prior to use.*

1.9 **Warning**—Mercury has been designated by EPA and many state agencies as a hazardous material that can cause central nervous system, kidney, and liver damage. Mercury, or its vapor, may be hazardous to health and corrosive to materials. Caution should be taken when handling mercury and mercury containing products. See the applicable product Material Safety Data Sheet (MSDS) for details and EPA's website (http://www.epa.gov/mercury/faq.htm) for additional information. Users should be aware that selling mercury or mercury containing products or both into your state may be prohibited by state law.

2. Referenced Documents

2.1 *ASTM Standards:*[3]

C127 Test Method for Density, Relative Density (Specific Gravity), and Absorption of Coarse Aggregate

C136 Test Method for Sieve Analysis of Fine and Coarse Aggregates

C670 Practice for Preparing Precision and Bias Statements for Test Methods for Construction Materials

D653 Terminology Relating to Soil, Rock, and Contained Fluids

D698 Test Methods for Laboratory Compaction Characteristics of Soil Using Standard Effort (12 400 ft-lbf/ft^3 (600 kN-m/m^3))

D854 Test Methods for Specific Gravity of Soil Solids by Water Pycnometer

D2168 Practices for Calibration of Laboratory Mechanical-Rammer Soil Compactors

D2216 Test Methods for Laboratory Determination of Water (Moisture) Content of Soil and Rock by Mass

D2487 Practice for Classification of Soils for Engineering Purposes (Unified Soil Classification System)

D2488 Practice for Description and Identification of Soils (Visual-Manual Procedure)

D3740 Practice for Minimum Requirements for Agencies Engaged in Testing and/or Inspection of Soil and Rock as Used in Engineering Design and Construction

D4220 Practices for Preserving and Transporting Soil Samples

D4253 Test Methods for Maximum Index Density and Unit Weight of Soils Using a Vibratory Table

D4718 Practice for Correction of Unit Weight and Water Content for Soils Containing Oversize Particles

D4753 Guide for Evaluating, Selecting, and Specifying Balances and Standard Masses for Use in Soil, Rock, and Construction Materials Testing

D4914 Test Methods for Density and Unit Weight of Soil and Rock in Place by the Sand Replacement Method in a Test Pit

D5030 Test Method for Density of Soil and Rock in Place by the Water Replacement Method in a Test Pit

D6026 Practice for Using Significant Digits in Geotechnical Data

D6913 Test Methods for Particle-Size Distribution (Gradation) of Soils Using Sieve Analysis

E11 Specification for Woven Wire Test Sieve Cloth and Test Sieves

E319 Practice for the Evaluation of Single-Pan Mechanical Balances

IEEE/ASTM SI 10 Standard for Use of the International System of Units (SI): The Modern Metric System

[3] For referenced ASTM standards, visit the ASTM website, www.astm.org, or contact ASTM Customer Service at service@astm.org. For *Annual Book of ASTM Standards* volume information, refer to the standard's Document Summary page on the ASTM website.

Copyright by ASTM Int'l (all rights reserved); Fri Nov 21 11:39:33 EST 2014
Downloaded/printed by
Paul Jobmann (none) pursuant to License Agreement. No further reproductions authorized.

3. Terminology

3.1 *Definitions:*

3.1.1 See Terminology D653 for general definitions.

3.1.2 *molding water content, n*—the water content of the soil (material) specimen in the mold after it has been reconstituted and compacted.

3.1.3 *modified effort*—in compaction testing, the term for the 56 000 ft-lbf/ft^3 (2700 kN-m/m^3) compactive effort applied by the equipment and methods of this test.

3.1.4 *modified maximum dry unit weight,* $\gamma_{d,max}$ *(lbf/ft^3 (kN/m^3))*—in compaction testing, the maximum value defined by the compaction curve for a compaction test using modified effort.

3.1.5 *modified optimum water content,* w_{opt} *(%)*—in compaction testing, the water content at which the soil can be compacted to the maximum dry unit weight using modified compactive effort.

3.2 *Definitions of Terms Specific to This Standard:*

3.2.1 *oversize fraction (coarse fraction),* P_C *(%)*—the portion of total specimen not used in performing the compaction test; it may be the portion of total specimen retained on the No. 4 (4.75-mm) sieve in Method A, ⅜-in. (9.5-mm) sieve in Method B, or ¾-in. (19.0-mm) sieve in Method C.

3.2.2 *test fraction (finer fraction),* P_F *(%)* —the portion of the total specimen used in performing the compaction test; it may be fraction passing the No. 4 (4.75-mm) sieve in Method A, passing the ⅜-in. (9.5-mm) sieve in Method B, or passing the ¾-in. (19.0-mm) sieve in Method C.

4. Summary of Test Method

4.1 A soil at a selected molding water content is placed in five layers into a mold of given dimensions, with each layer compacted by 25 or 56 blows of a 10.00-lbf (44.48-N) rammer dropped from a distance of 18.00 in. (457.2 mm), subjecting the soil to a total compactive effort of about 56 000 ft-lbf/ft^3 (2700 kN-m/m^3). The resulting dry unit weight is determined. The procedure is repeated for a sufficient number of molding water contents to establish a relationship between the dry unit weight and the molding water content for the soil. This data, when plotted, represent a curvilinear relationship known as the compaction curve. The values of optimum water content and modified maximum dry unit weight are determined from the compaction curve.

5. Significance and Use

5.1 Soil placed as engineering fill (embankments, foundation pads, road bases) is compacted to a dense state to obtain satisfactory engineering properties such as shear strength, compressibility, or permeability. In addition, foundation soils are often compacted to improve their engineering properties. Laboratory compaction tests provide the basis for determining the percent compaction and molding water content needed to achieve the required engineering properties, and for controlling construction to assure that the required compaction and water contents are achieved.

NOTE 3—The degree of soil compaction required to achieve the desired engineering properties is often specified as a percentage of the modified maximum dry unit weight as determined using this test method. If the required degree of compaction is substantially less than the modified maximum dry unit weight using this test method, it may be practicable for testing to be performed using Test Method D698 and to specify the degree of compaction as a percentage of the standard maximum dry unit weight. Since more energy is applied for compaction using this test method, the soil particles are more closely packed than when D698 is used. The general overall result is a higher maximum dry unit weight, lower optimum moisture content, greater shear strength, greater stiffness, lower compressibility, lower air voids, and decreased permeability. However, for highly compacted fine-grained soils, absorption of water may result in swelling, with reduced shear strength and increased compressibility, reducing the benefits of the increased effort used for compaction (**2**). Use of D698, on the other hand, allows compaction using less effort and generally at a higher optimum moisture content. The compacted soil may be less brittle, more flexible, more permeable, and less subject to effects of swelling and shrinking. In many applications, building or construction codes may direct which test method, D698 or this one, should be used when specifying the comparison of laboratory test results to the degree of compaction of the in-place soil in the field.

5.2 During design of an engineered fill, testing performed to determine shear, consolidation, permeability, or other properties requires test specimens to be prepared by compacting the soil at a prescribed molding water content to obtain a predetermined unit weight. It is common practice to first determine the optimum water content (w_{opt}) and maximum dry unit weight (γ_{dmax}) by means of a compaction test. Test specimens are compacted at a selected molding water content (w), either wet or dry of optimum (w_{opt}) or at optimum (w_{opt}), and at a selected dry unit weight related to a percentage of maximum dry unit weight (γ_{dmax}). The selection of molding water content (w), either wet or dry of optimum (w_{opt}) or at optimum (w_{opt}) and the dry unit weight (γ_{dmax}) may be based on past experience, or a range of values may be investigated to determine the necessary percent of compaction.

5.3 Experience indicates that the methods outlined in 5.2 or the construction control aspects discussed in 5.1 are extremely difficult to implement or yield erroneous results when dealing with some soils. The following subsections describe typical problem soils, the problems encountered when dealing with such soils and possible solutions for these problems.

5.3.1 *Oversize Fraction*—Soils containing more than 30 % oversize fraction (material retained on the ¾-in. (19-mm) sieve) are a problem. For such soils, there is no ASTM test method to control their compaction and very few laboratories are equipped to determine the laboratory maximum unit weight (density) of such soils (USDI Bureau of Reclamation, Denver, CO and U.S. Army Corps of Engineers, Vicksburg, MS). Although Test Methods D4914 and D5030 determine the "field" dry unit weight of such soils, they are difficult and expensive to perform.

5.3.1.1 One method to design and control the compaction of such soils is to use a test fill to determine the required degree of compaction and the method to obtain that compaction. Then use a method specification to control the compaction. Components of a method specification typically contain the type and size of compaction equipment to be used, the lift thickness, acceptable range of molding water content, and number of passes.

Copyright by ASTM Int'l (all rights reserved); Fri Nov 21 11:39:33 EST 2014
Downloaded/printed by
Paul Jobmann (none) pursuant to License Agreement. No further reproductions authorized.

NOTE 4—Success in executing the compaction control of an earthwork project, especially when a method specification is used, is highly dependent upon the quality and experience of the contractor and inspector.

5.3.1.2 Another method is to apply the use of density correction factors developed by the USDI Bureau of Reclamation (**3**,**4**) and U.S. Corps of Engineers (**5**). These correction factors may be applied for soils containing up to about 50 to 70 % oversize fraction. Both agencies use a different term for these density correction factors. The USDI Bureau of Reclamation uses *D* ratio (or *D* – VALUE), while the U.S. Corps of Engineers uses Density Interference Coefficient (I_c).

5.3.1.3 The use of the replacement technique (Test Method D1557–78, Method D), in which the oversize fraction is replaced with a finer fraction, is inappropriate to determine the maximum dry unit weight, γ_{dmax}, of soils containing oversize fractions (**5**).

5.3.2 *Degradation*—Soils containing particles that degrade during compaction are a problem, especially when more degradation occurs during laboratory compaction than field compaction, the typical case. Degradation typically occurs during the compaction of a granular-residual soil or aggregate. When degradation occurs, the maximum dry-unit weight increases (**1**) so that the resulting laboratory maximum value is not representative of field conditions. Often, in these cases, the maximum dry unit weight is impossible to achieve in the field.

5.3.2.1 Again for soils subject to degradation, the use of test fills and method specifications may help. Use of replacement techniques is not correct.

5.3.3 *Gap Graded*—Gap-graded soils (soils containing many large particles with limited small particles) are a problem because the compacted soil will have larger voids than usual. To handle these large voids, standard test methods (laboratory or field) typically have to be modified using engineering judgement.

NOTE 5—The quality of the result produced by this standard is dependent on the competence of the personnel performing it, and the suitability of the equipment and facilities used. Agencies that meet the criteria of Practice D3740 are generally considered capable of competent and objective testing/sampling/inspection/etc. Users of this standard are cautioned that compliance with Practice D3740 does not in itself assure reliable results. Reliable results depend on many factors; Practice D3740 provides a means of evaluating some of those factors.

6. Apparatus

6.1 *Mold Assembly*—The molds shall be cylindrical in shape, made of rigid metal and be within the capacity and dimensions indicated in 6.1.1 or 6.1.2 and Fig. 1 and Fig. 2. See also Table 1. The walls of the mold may be solid, split, or tapered. The "split" type may consist of two half-round sections, or a section of pipe split along one element, which can be securely locked together to form a cylinder meeting the requirements of this section. The "tapered" type shall have an internal diameter taper that is uniform and not more than 0.200 in./ft (16.7 mm/m) of mold height. Each mold shall have a base plate and an extension collar assembly, both made of rigid metal and constructed so they can be securely attached and easily detached from the mold. The extension collar assembly shall have a height extending above the top of the mold of at least 2.0 in. (51 mm) which may include an upper section that flares out to form a funnel, provided there is at least a 0.75-in. (19-mm) straight cylindrical section beneath it. The extension collar shall align with the inside of the mold. The bottom of the base plate and bottom of the centrally recessed area that accepts the cylindrical mold shall be planar within ±0.005 in. (±0.1 mm).

6.1.1 *Mold, 4 in.*—A mold having a 4.000 ± 0.016-in. (101.6 ± 0.4-mm) average inside diameter, a height of 4.584 ± 0.018 in. (116.4 ± 0.5 mm) and a volume of 0.0333 ± 0.0005 ft^3 (943.0 ± 14.0 cm^3). A mold assembly having the minimum required features is shown in Fig. 1.

6.1.2 *Mold, 6 in.*—A mold having a 6.000 ± 0.026-in. (152.4 ± 0.7-mm) average inside diameter, a height of 4.584 ± 0.018 in. (116.4 ± 0.5 mm), and a volume of 0.0750 ± 0.0009 ft^3 (2124 ± 25 cm^3). A mold assembly having the minimum required features is shown in Fig. 2.

6.2 *Rammer*—A rammer, either manually operated as described further in 6.2.1 or mechanically operated as described in 6.2.2. The rammer shall fall freely through a distance of 18.00 ± 0.05 in. (457.2 ± 1.3 mm) from the surface of the specimen. The weight of the rammer shall be 10.00 ± 0.02 lbf (44.48 ± 0.09 N, or mass of 4.5364 ± 0.009 kg), except that the weight of the mechanical rammers may be adjusted as described in Practices D2168 (see Note 6). The striking face of

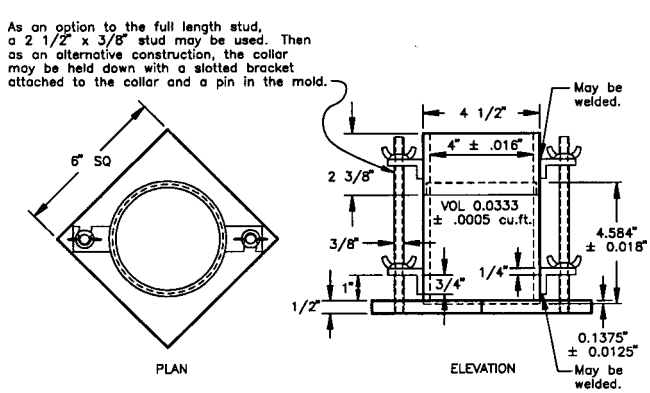

NOTE 1—See Table 1 for SI equivalents.

FIG. 1 Cylindrical Mold, 4.0-in.

Copyright by ASTM Int'l (all rights reserved); Fri Nov 21 11:39:33 EST 2014
Downloaded/printed by
Paul Jobmann (none) pursuant to License Agreement. No further reproductions authorized.

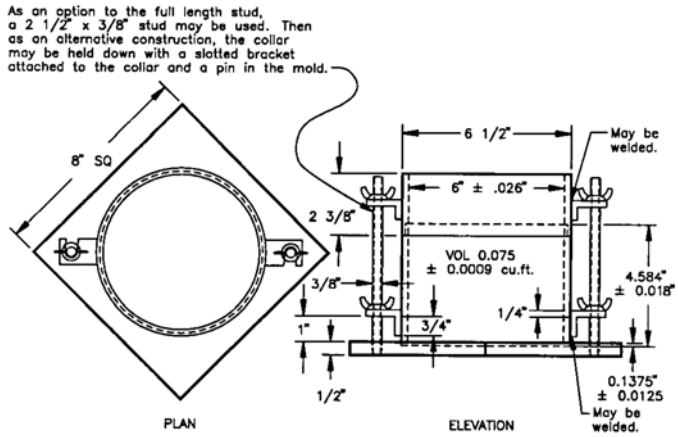

NOTE 1—See Table 1 for SI equivalents.

FIG. 2 Cylindrical Mold, 6.0-in.

TABLE 1 SI Equivalents for Figs. 1 and 2

in.	mm
0.016	0.41
0.026	0.66
0.032	0.81
0.028	0.71
½	12.70
2⅜	60.33
2½	63.50
2⅝	66.70
4	101.60
4½	114.30
4.584	116.43
4¾	120.60
6	152.40
6½	165.10
6⅝	168.30
6¾	171.40
8¼	208.60
ft^3	cm^3
1/30 (0.0333)	943
0.0005	14
1/13.333 (0.0750)	2,124
0.0011	31

the rammer shall be planar and circular, except as noted in 6.2.2.1, with a diameter when new of 2.000 ± 0.005 in. (50.80 ± 0.13 mm). The rammer shall be replaced if the striking face becomes worn or bellied to the extent that the diameter exceeds 2.000 ± 0.01 in. (50.80 ± 0.25 mm).

NOTE 6—It is a common and acceptable practice to determine the weight of the rammer using either a kilogram or pound balance and assume 1 lbf is equivalent to 0.4536 kg, 1 lbf is equivalent to 1 lbm, or 1 N is equivalent to 0.2248 lbf or 0.1020 kg.

6.2.1 *Manual Rammer*—The rammer shall be equipped with a guide sleeve that has sufficient clearance that the free fall of the rammer shaft and head is not restricted. The guide sleeve shall have at least four vent holes at each end (eight holes total) located with centers ¾ ± 1/16 in. (19 ± 2 mm) from each end and spaced 90° apart. The minimum diameter of the vent holes shall be ⅜ in. (9.5 mm). Additional holes or slots may be incorporated in the guide sleeve.

6.2.2 *Mechanical Rammer-Circular Face*—The rammer shall operate mechanically in such a manner as to provide uniform and complete coverage of the specimen surface. There shall be 0.10 ± 0.03-in. (2.5 ± 0.8-mm) clearance between the rammer and the inside surface of the mold at its smallest diameter. The mechanical rammer shall meet the standardization/calibration requirements of Practices D2168. The mechanical rammer shall be equipped with a positive mechanical means to support the rammer when not in operation.

6.2.2.1 *Mechanical Rammer-Sector Face*—The sector face can be used with the 6.0-in. (152.4-mm) mold, as an alternative to the circular face mechanical rammer described in 6.2.2. The striking face shall have the shape of a sector of a circle of radius equal to 2.90 ± 0.02 in. (73.7 ± 0.5 mm) and an area about the same as the circular face (see 6.2). The rammer shall operate in such a manner that the vertex of the sector is positioned at the center of the specimen and follow the compaction pattern given in Fig. 3(b).

6.3 *Sample Extruder (optional)*—A jack, with frame or other device adapted for the purpose of extruding compacted specimens from the mold.

6.4 *Balance*—A Class GP5 balance meeting the requirements of Specification D4753 for a balance of 1-g readability. If the water content of the compacted specimens is determined using a representative portion of the specimen, rather than the whole specimen, and if the representative portion is less than 1000 g, a Class GP2 balance having a 0.1-g readability is needed in order to comply with Test Methods D2216 requirements for determining water content to 0.1 %.

NOTE 7—Use of a balance having an equivalent capacity and a readability of 0.002 lbm as an alternative to a class GP5 balance should not be regarded as nonconformance to this standard.

6.5 *Drying Oven*—Thermostatically controlled oven, capable of maintaining a uniform temperature of 230 ± 9°F (110 ± 5°C) throughout the drying chamber. These requirements typically require the use of a forced-draft type oven. Preferably the oven should be vented outside the building.

6.6 *Straightedge*—A stiff metal straightedge of any convenient length but not less than 10 in. (250 mm). The total length of the straightedge shall be machined straight to a tolerance of ±0.005 in. (±0.1 mm). The scraping edge shall be beveled if it is thicker than ⅛ in. (3 mm).

Copyright by ASTM Int'l (all rights reserved); Fri Nov 21 11:39:33 EST 2014
Downloaded/printed by
Paul Jobmann (none) pursuant to License Agreement. No further reproductions authorized.

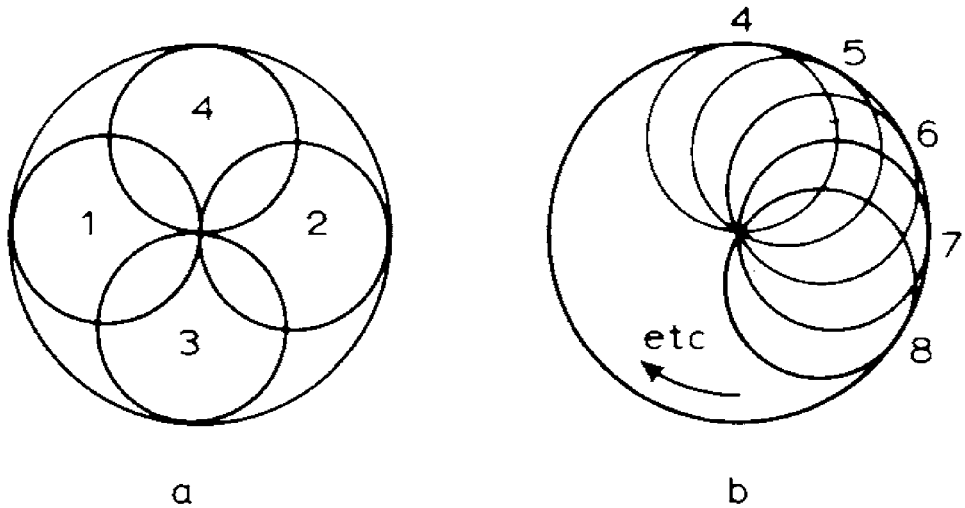

FIG. 3 Rammer Pattern for Compaction in 4-in. (101.6-mm) Mold

6.7 *Sieves*—¾ in. (19.0 mm), ⅜ in. (9.5 mm), and No. 4 (4.75 mm), conforming to the requirements of Specification E11.

6.8 *Mixing Tools*—Miscellaneous tools such as mixing pan, spoon, trowel, spatula, spray device (to add water evenly), and (preferably, but optional) a suitable mechanical device for thoroughly mixing the subspecimen of soil with increments of water.

7. Standardization/Calibration

7.1 Perform standardizations before initial use, after repairs or other occurrences that might affect the test results, at intervals not exceeding 1000 test specimens, or annually, whichever occurs first, for the following apparatus:

7.1.1 *Balance*—Evaluate in accordance with Specification D4753 or Practice E319.

7.1.2 *Molds*—Determine the volume as described in Annex A1.

7.1.3 *Manual Rammer*—Verify the free fall distance, rammer weight, and rammer face are in accordance with 6.2. Verify the guide sleeve requirements in accordance with 6.2.1.

7.1.4 *Mechanical Rammer*—Verify and adjust if necessary that the mechanical rammer in accordance with Practices D2168. In addition, the clearance between the rammer and the inside surface of the mold shall be verified in accordance with 6.2.2.

8. Test Specimen

8.1 The minimum test specimen (test fraction) mass for Methods A and B is about 16 kg, and for Method C is about 29 kg of dry soil. Therefore, the field sample (see Practices D4220 for practices of preserving and transporting soil samples) should have a moist mass of at least 23 kg and 45 kg, respectively. Greater masses would be required if the oversize fraction is large (see 10.2 or 10.3) or an additional molding water content is taken during compaction of each point (see 10.4.1).

8.2 If gradation data is not available, estimate the percentage of material (by mass) retained on the No. 4 (4.75-mm), ⅜-in. (9.5-mm), or ¾-in. (19.0-mm) sieve as appropriate for selecting Method A, B, or C, respectively. If it appears the percentage retained of interest is close to the allowable value for a given Method (A, B, or C), then either:

8.2.1 Select a Method that allows a higher percentage retained (B or C).

8.2.2 Using the sieve size designated for the Method of interest, process the specimen in accordance with 10.2 or 10.3 herein. This determines the percentage of material retained for that method. If the percentage retained is acceptable, proceed. If the percentage retained is not acceptable, go to Method B or C using the next larger sieve size.

8.2.3 Determine percentage retained values using a representative portion from the total sample, and performing a simplified or complete gradation analysis using the sieve(s) of interest and Test Method D6913 or C136. It is only necessary to calculate the retained percentage(s) for the sieve or sieves for which information is desired.

9. Preparation of Apparatus

9.1 Select the proper compaction mold(s), collar, and base plate in accordance with the Method (A, B, or C) being used. Check that the volume of the mold is known and whether the volume was determined with or without the base plate. Also, check that the mold is free of nicks or dents, and that the mold will fit together properly with the collar and base plate.

9.2 Check that the manual or mechanical rammer assembly is in good working condition and that parts are not loose or worn. Make any necessary adjustments or repairs. If adjustments or repairs are made, the rammer must be restandardized.

10. Procedure

10.1 *Soils:*

10.1.1 Do not reuse soil that has been previously compacted in the laboratory. The reuse of previously compacted soil yields a significantly greater maximum dry unit weight (**1**).

Copyright by ASTM Int'l (all rights reserved); Fri Nov 21 11:39:33 EST 2014
Downloaded/printed by
Paul Jobmann (none) pursuant to License Agreement. No further reproductions authorized.

10.1.2 When using this test method for soils containing hydrated halloysite, or in which past experience indicates that results will be altered by air-drying, use the moist preparation method (see Section 10.2). In referee testing, each laboratory has to use the same method of preparation, either moist (preferred) or air-dried.

10.1.3 Prepare the soil specimens for testing in accordance with 10.2 (preferred) or with 10.3.

10.2 *Moist Preparation Method (preferred)*—Without previously drying the sample/specimen, process it over a No. 4 (4.75-mm), ⅜-in. (9.5-mm), or ¾-in. (19.0-mm) sieve, depending on the Method (A, B, or C) being used or required as covered in 8.2. For additional processing details, see Test Method D6913. Determine and record the mass of both the retained and passing portions (oversize fraction and test fraction, respectively) to the nearest g. Oven dry the oversize fraction and determine and record its dry mass to the nearest g. If it appears more than 0.5 % of the total dry mass of the specimen is adhering to the oversize fraction, wash that fraction. Then determine and record its oven dry mass to the nearest g. Determine and record the water content of the processed soil (test fraction). Using that water content, determine and record the oven dry mass of the test fraction to the nearest g. Based on these oven dry masses, the percent oversize fraction, P_C, and test fraction, P_F, shall be determined and recorded, unless a gradation analysis has already been performed. See Section 11 on Calculations.

10.2.1 From the test fraction, select and prepare at least four (preferably five) subspecimens having molding water contents such that they bracket the estimated optimum water content. A subspecimen having a molding water content close to optimum should be prepared first by trial additions or removals of water and mixing (see Note 8). Select molding water contents for the rest of the subspecimens to provide at least two subspecimens wet and two subspecimens dry of optimum, and molding water contents varying by about 2 %. At least two molding water contents are necessary on the wet and dry side of optimum to define the dry-unit-weight compaction curve (see 10.5). Some soils with very high optimum water content or a relatively flat compaction curve may require larger molding water content increments to obtain a well-defined maximum dry unit weight. Molding water content increments should not exceed about 4 %.

NOTE 8—With practice it is usually possible to visually judge a point near optimum water content. Typically, cohesive soils at the optimum water content can be squeezed into a lump that barely sticks together when hand pressure is released, but will break cleanly into two sections when "bent." They tend to crumble at molding water contents dry of optimum; they tend to stick together in a sticky cohesive mass wet of optimum. For cohesive soils, the optimum water content is typically slightly less than the plastic limit. For cohesionless soils, the optimum water content is typically close to zero or at the point where bleeding occurs.

10.2.2 Thoroughly mix the test fraction, then using a scoop select representative soil for each subspecimen (compaction point). Select about 2.3 kg when using Method A or B, or about 5.9 kg for Method C. Test Method D6913 section on Specimen and Annex A2 give additional details on obtaining representative soil using this procedure and the reason it is the preferred method. To obtain the subspecimen's molding water contents selected in 10.2.1, add or remove the required amounts of water as follows: To add water, spray it into the soil during mixing; to remove water, allow the soil to dry in air at ambient temperature or in a drying apparatus such that the temperature of the sample does not exceed 140°F (60°C). Mix the soil frequently during drying to facilitate an even water content distribution. Thoroughly mix each subspecimen to facilitate even distribution of water throughout and then place in a separate covered container to stand (cure) in accordance with Table 2 prior to compaction. For selecting a standing time, the soil may be classified using Practice D2487, Practice D2488 or data on other samples from the same material source. For referee testing, classification shall be by Practice D2487.

10.3 *Dry Preparation Method*—If the sample/specimen is too damp to be friable, reduce the water content by air drying until the material is friable. Drying may be in air or by the use of drying apparatus such that the temperature of the sample does not exceed 140°F (60°C). Thoroughly break up the aggregations in such a manner as to avoid breaking individual particles. Process the material over the appropriate sieve: No. 4 (4.75 mm), ⅜ in. (9.5 mm), or ¾ in. (19.0 mm). When preparing the material by passing over the ¾-in. sieve for compaction in the 6-in. mold, break up aggregations sufficiently to at least pass the ⅜ in. sieve in order to facilitate the distribution of water throughout the soil in later mixing. Determine and record the water content of the test fraction and all masses covered in 10.2, as applicable to determine the percent oversize fraction, P_C, and test fraction, P_F.

10.3.1 From the test fraction, select and prepare at least four (preferably five) subspecimens in accordance with 10.2.1 and 10.2.2, except for the following: Use either a mechanical splitting or quartering process to obtain the subspecimens. As stated in Test Method D6913, both of these processes will yield non-uniform subspecimens compared to the moist procedure. Typically, only the addition of water to each subspecimen will be required.

10.4 *Compaction*—After standing (curing), if required, each subspecimen (compaction point) shall be compacted as follows:

10.4.1 Determine and record the mass of the mold or mold and base plate, see 10.4.7.

10.4.2 Assemble and secure the mold and collar to the base plate. Check the alignment of the inner wall of the mold and mold extension collar. Adjust if necessary. The mold shall rest without wobbling/rocking on a uniform rigid foundation, such as provided by a cylinder or cube of concrete with a weight or mass of not less than 200 lb or 91 kg, respectively. Secure the base plate to the rigid foundation. The method of attachment to the rigid foundation shall allow easy removal of the assembled mold, collar and base plate after compaction is completed.

TABLE 2 Required Standing Times of Moisturized Specimens

Classification	Minimum Standing Time, h
GW, GP, SW, SP	no requirement
GM, SM	3
All other soils	16

Copyright by ASTM Int'l (all rights reserved); Fri Nov 21 11:39:33 EST 2014
Downloaded/printed by
Paul Jobmann (none) pursuant to License Agreement. No further reproductions authorized.

10.4.2.1 During the compaction procedure, it is advantageous but not required to determine the water content of each subspecimen immediately prior to compaction. This provides a check on the molding water content determined for each compaction point and the magnitude of bleeding. See 10.4.9. However, more soil will have to be selected for each subspecimen than stated in 10.2.2.

10.4.3 Compact the soil in five layers. After compaction, each layer should be approximately equal in thickness and the final layer shall extend slightly into the collar. Prior to compaction, place the loose soil into the mold and spread into a layer of uniform thickness. Lightly tamp the soil prior to compaction until it is not in a fluffy or loose state, using either the manual rammer or a cylinder approximately 2 in. (50 mm) in diameter. Following compaction of each of the first four layers, any soil that has not been compacted, such as adjacent to the mold walls, or extends above the compacted surface (up the mold walls) shall be trimmed. The trimmed soil shall be discarded. A knife or other suitable device may be used. The total amount of soil used shall be such that the fifth compacted layer slightly extends into the collar, but does not extend more than approximately ¼ in. (6 mm) above the top of the mold. If the fifth layer does extend above this limit, then the compaction point shall be discarded. In addition, the compaction point shall be discarded when the last blow on the rammer for the fifth layer results in the bottom of the rammer extending below the top of the compaction mold, unless the soil is pliable enough that this surface can easily be forced above the top of the compaction mold during trimming. See Note 9.

10.4.4 Compact each layer with 25 blows for the 4-in. (101.6-mm) mold or with 56 blows for the 6-in. (152.4-mm) mold. The manual rammer shall be used for referee testing.

10.4.5 In operating the manual rammer, take care to avoid lifting the guide sleeve during the rammer upstroke. Hold the guide sleeve steady and within 5° of vertical. Apply the blows at a uniform rate of about 25 blows/min and in such a manner as to provide complete, uniform coverage of the specimen surface. When using a 4-in. (101.6-mm) mold and manual rammer, follow the blow pattern given in Fig. 3(a) and Fig. 3(b) while for a mechanical rammer, follow the pattern in Fig. 3(b). When using a 6-in. (152.4-mm) mold and manual rammer, follow the blow pattern given in Fig. 4 up to the 9th blow, then systematically around the mold (Fig. 3(b)) and in the middle. When using a 6-in. (152.4-mm) mold and a mechanical rammer equipped with a sector face, the mechanical rammer shall be designed to follow the compaction pattern given in Fig. 3(b). When using a 6-in. (152.4-mm) mold and a mechanical rammer equipped with a circular face, the mechanical rammer shall be designed to distribute the blows uniformly over the surface of the specimen. If the surface of the compacted soil becomes highly uneven (see Note 9) then adjust the pattern to follow the logic given in Fig. 3(a) or Fig. 4. This will most likely void the use of a mechanical rammer for such compaction points.

NOTE 9—When compacting specimens wetter than optimum water content, uneven compacted surfaces can occur and operator judgment is required as to the average height of the specimen and rammer pattern during compaction.

10.4.6 Following compaction of the last layer, remove the collar and base plate (except as noted in 10.4.7) from the mold. A knife may be used to trim the soil adjacent to the collar to loosen the soil from the collar before removal to avoid disrupting the soil below the top of the mold. In addition, to prevent/reduce soil sticking to the collar or base plate, rotate them before removal.

10.4.7 Carefully trim the compacted specimen even with the top of the mold by means of the straightedge scraped across the top of the mold to form a plane surface even with the top of the mold. Initial trimming of the specimen above the top of the mold with a knife may prevent tearing out soil below the top of the mold. Fill any holes in either surface with unused or trimmed soil from the specimen, press in with the fingers, and again scrape the straightedge across the top of the mold. If gravel size particles are encountered, trim around them or

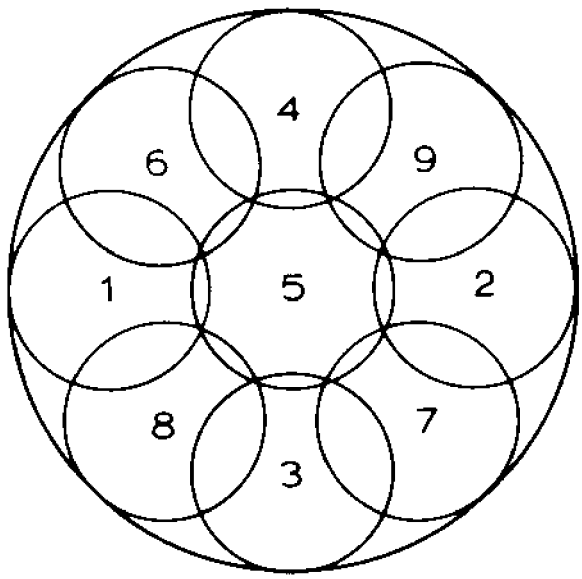

FIG. 4 Rammer Pattern for Compaction in 6-in. (152.4-mm) Mold

Copyright by ASTM Int'l (all rights reserved); Fri Nov 21 11:39:33 EST 2014
Downloaded/printed by
Paul Jobmann (none) pursuant to License Agreement. No further reproductions authorized.

remove them, whichever is the easiest and reduces the disturbance of the compacted soil. The estimated volume of particles above the surface of the compacted soil and holes in that surface shall be equal. Fill in remaining holes as mentioned above. Repeat the appropriate preceding operations on the bottom of the specimen when the mold volume was determined without the base plate. For very wet or dry soils, soil or water may be lost if the base plate is removed. For these situations, leave the base plate attached to the mold. When the base plate is left attached, the volume of the mold must be calibrated with the base plate attached to the mold rather than a plastic or glass plate as noted in Annex A1 (A1.4.1).

10.4.8 Determine and record the mass of the specimen and mold to the nearest g. When the base plate is left attached, determine and record the mass of the specimen, mold and base plate to the nearest g.

10.4.9 Remove the material from the mold. Obtain a specimen for molding water content by using either the whole specimen (preferred method) or a representative portion. When the entire specimen is used, break it up to facilitate drying. Otherwise, obtain a representative portion of the five layers, removing enough material from the specimen to report the water content to 0.1 %. The mass of the representative portion of soil shall conform to the requirements of Table 1, Method B, of Test Methods D2216. Determine the molding water content in accordance with Test Method D2216.

10.5 Following compaction of the last specimen, compare the wet unit weights to ensure that a desired pattern of obtaining data on each side of the optimum water content will be attained for the dry-unit-weight compaction curve. Plotting the wet unit weight and molding water content of each compacted specimen can be an aid in making the above evaluation. If the desired pattern is not obtained, additional compacted specimens will be required. Generally, for experienced plotters of compaction curves, one compaction point wet of the optimum water content is adequate to define the maximum wet unit weight. See 11.2.

11. Calculation and Plotting (Compaction Curve)

11.1 *Fraction Percentages*—If gradation data from Test Method D6913 is not available, calculate the dry mass of the test fraction, percentage of oversize fraction, and test fraction as covered below and using the data from 10.2 or 10.3:

11.1.1 *Test Fraction*—Determine the dry mass of the test fraction as follows:

$$M_{d,tf} = \frac{M_{m,tf}}{1 + \frac{w_{tf}}{100}} \quad (1)$$

where:

$M_{d,tf}$ = dry mass of test fraction, nearest g or 0.001 kg,
$M_{m,tf}$ = moist mass of test fraction, nearest g or 0.001 kg, and
w_{tf} = water content of test fraction, nearest 0.1 %.

11.1.2 *Oversize Fraction Percentage*—Determine the oversize (coarse) fraction percentage as follows:

$$P_C = \frac{M_{d,of}}{M_{d,of} + M_{d,tf}} \quad (2)$$

where:

P_C = percentage of oversize (coarse) fraction, nearest %,
$M_{d,of}$ = dry mass of oversize fraction, nearest g or 0.001 kg.

11.1.3 *Test Fraction Percentage*—Determine the test (finer) fraction percentage as follows:

$$P_F = 100 - P_C \quad (3)$$

where:

P_F = percentage of test (finer) fraction, nearest %

11.2 *Density and Unit Weight*—Calculate the molding water content, moist density, dry density, and dry unit weight of each compacted specimen as explained below.

11.2.1 *Molding Water Content, w*—Calculate in accordance with Test Method D2216 to nearest 0.1 %.

11.2.2 *Density and Unit Weights*—Calculate the moist (total) density (Eq 4), the dry density (Eq 5), and then the dry unit weight (Eq 6) as follows:

11.2.2.1 *Moist Density:*

$$\rho_m = K \times \frac{(M_t - M_{md})}{V} \quad (4)$$

where:

ρ_m = moist density of compacted subspecimen (compaction point), four significant digits, g/cm^3 or kg/m^3,
M_t = mass of moist soil in mold and mold, nearest g,
M_{md} = mass of compaction mold, nearest g,
V = volume of compaction mold, cm^3 or m^3 (see Annex A1), and
K = conversion constant, depending on density units and volume units. Use 1 for g/cm^3 and volume in cm^3. Use 1000 for g/cm^3 and volume in m^3. Use 0.001 for kg/cm ^{3} and volume in m^3. Use 1000 for kg/m^3 and volume in cm^3.

11.2.2.2 *Dry Density:*

$$\rho_d = \frac{\rho_m}{1 + \frac{w}{100}} \quad (5)$$

where:

ρ_d = dry density of compaction point, four significant digits, g/cm^3 or kg/m^3, and
w = molding water content of compaction point, nearest 0.1 %.

11.2.2.3 *Dry Unit Weight:*

$$\gamma_d = K_1 \times \rho_d \quad (6)$$

in lbf/ft^3, or,

$$\gamma_d = K_2 \times \rho_d \quad (7)$$

in kN/m^3,

where:

γ_d = dry unit weight of compacted specimen, four significant digits, in lbf/ft ^{3} or kN/m^3,
K_1 = conversion constant, depending on density units. Use 62.428 for density in g/cm^3, or use 0.062428 for density in kg/m^3,

Copyright by ASTM Int'l (all rights reserved); Fri Nov 21 11:39:33 EST 2014
Downloaded/printed by
Paul Jobmann (none) pursuant to License Agreement. No further reproductions authorized.

K_2 = conversion constant, depending on density units. Use 9.8066 for density in g/cm^3, or use 0.0098066 for density in kg/m^3.

11.3 *Compaction Curve*—Plot the dry unit weight and molding water content values, the saturation curve (see 11.3.2), and draw the compaction curve as a smooth curve through the points (see example, Fig. 5). For each point on the compaction curve, calculate, record, and plot dry unit weight to the nearest 0.1 lbf/ft^3 (0.02 kN/m^3) and molding water content to the nearest 0.1 %. From the compaction curve, determine the compaction results: optimum water content, to nearest 0.1 % and maximum dry unit weight, to the nearest 0.1 lbf/ft^3 (0.02 kN/m^3). If more than 5 % by mass of oversize material was removed from the sample/specimen, calculate the corrected optimum water content and maximum dry unit weight of the total material using Practice D4718. This correction may be made to the appropriate field in-place density test specimen rather than to the laboratory compaction results.

11.3.1 In these plots, the scale sensitivities should remain the same, that is, the change in molding water content or dry unit weight per division is constant between plots. Typically, the change in dry unit weight per division is twice that of molding water content's (2 lbf/ft^3 to 1 % *w* per major division). Therefore, any change in the shape of the compaction curve is a result of testing different material, not the plotting scale. However, a one to one ratio should be used for soils have a relatively flat compaction curve (see 10.2.1), such as highly plastic soils or relatively free draining ones up to the point of bleeding.

11.3.1.1 The shape of the compaction curve on the wet side on optimum should typically follow that of the saturation curve. The shape of the compaction curve on the dry side of optimum may be relatively flat or up and down when testing some soils, such as relatively free draining ones or plastic soils prepared using the moist procedure and having molding water contents close to or less than the shrinkage limit.

11.3.2 Plot the 100 % saturation curve, based on either an estimated or a measured specific gravity. Values of water content for the condition of 100 % saturation can be calculated as explained in 11.4 (see example, Fig. 5).

NOTE 10—The 100 % saturation curve is an aid in drawing the compaction curve. For soils containing more than about 10 % fines and molding water contents well above optimum, the two curves generally become roughly parallel with the wet side of the compaction curve between 92 % to 95 % saturation. Theoretically, the compaction curve cannot plot to the right of the 100 % saturation curve. If it does, there is an error in specific gravity, in measurements, in calculations, in testing, or in plotting. The 100 % saturation curve is sometimes referred to as the zero air voids curve or the complete saturation curve.

11.4 *Saturation Points*—To calculate points for plotting the 100 % saturation curve or zero air voids curve, select values of dry unit weight, calculate corresponding values of water content corresponding to the condition of 100 % saturation as follows:

$$w_{sat} = \frac{(\gamma_w)(G_s) - \gamma_d}{(\gamma_d)(G_s)} \times 100 \quad (8)$$

where:

w_{sat} = water content for complete saturation, nearest 0.1 %,

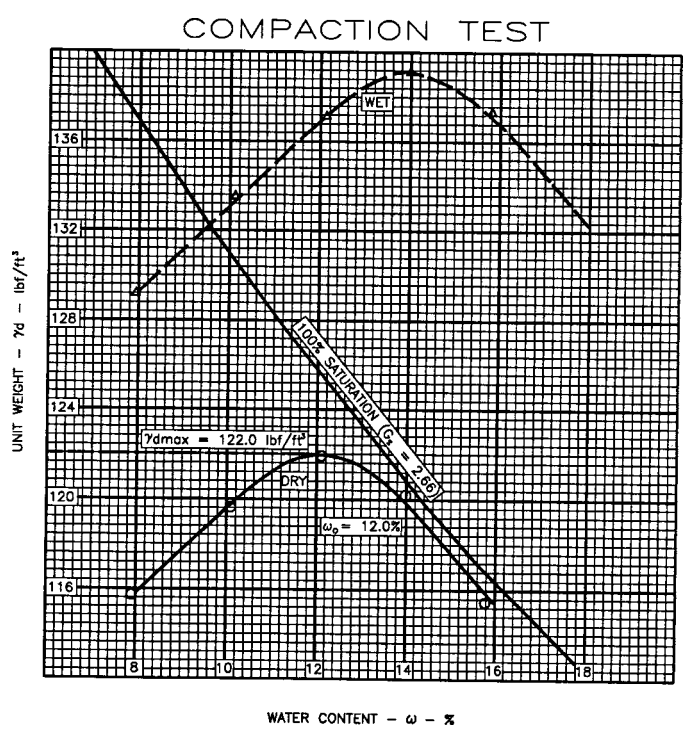

NOTE 1—Wet Unit Weights are usually not plotted. They are plotted here for informational purposes only. Also notice that the compaction points may not all lie exactly on the compaction curve.

FIG. 5 Example Compaction Curve Plotting

Copyright by ASTM Int'l (all rights reserved); Fri Nov 21 11:39:33 EST 2014
Downloaded/printed by
Paul Jobmann (none) pursuant to License Agreement. No further reproductions authorized.

γ_w = unit weight of water, 62.32 lbf/ft^3 (9.789 kN/m^3) at 20°C,
γ_d = dry unit weight of soil, lbf/ft^3 (kN/m^3), three significant digits, and
G_s = specific gravity of soil (estimated or measured), to nearest 0.01 value, see 11.4.1.

11.4.1 Specific gravity may be estimated for the test fraction based on test data from other soils having the same soil classification and source or experience. Otherwise, a specific gravity test (Test Method C127, Test Method D854, or both) is necessary.

12. Report: Data Sheet(s)/Form(s)

12.1 The methodology used to specify how data are recorded on the test data sheet(s)/form(s), as described below, is covered in Section 1.6.

12.2 The data sheet(s)/form(s) shall contain as a minimum the following information:

12.2.1 Method used (A, B, or C).

12.2.2 Preparation method used (moist or dry).

12.2.3 As-received water content, if determined, nearest 1 %.

12.2.4 Modified optimum water content, Mod-w_{opt} to nearest 0.1 %.

12.2.5 Modified maximum (optimum) dry unit weight, Mod-$\gamma_{d,max}$ nearest 0.1 lbf/ft^3 or 0.02 kN/m^3.

12.2.6 Type of rammer (manual or mechanical).

12.2.7 Soil sieve data when applicable for selection of Method (A, B, or C) used.

12.2.8 Description of sample used in test (as a minimum, color and group name and symbol), by Practice D2488, or classification by Test Method D2487.

12.2.9 Specific gravity and method of determination, nearest 0.01 value.

12.2.10 Identification of sample used in test, for example, project number/name, location, depth, and the like.

12.2.11 Compaction curve plot showing compaction points used to establish compaction curve, and 100 % saturation curve, value or point of maximum dry unit weight and optimum water content.

12.2.12 Percentages for the fractions retained (P_C) and passing (P_F) the sieve used in Method A, B, or C, nearest 1 %. In addition, if compaction data (Mod-w_{opt} and Mod-$\gamma_{d,max}$) are corrected for the oversize fraction, include that data.

NOTE 11—The Data Sheet(s)/Form requirements in Section 12 are not intended as requirements for reporting final test results to the requesting agency. The requirements apply to testing records for measurements, for intermediate calculations and for compaction points used to plot the compaction curve. It has been attempted in this test method to determine all measurements and calculations to four significant figures. The purpose is to ensure that precision is not lost due to rounding prior to plotting the compaction curve and that data sheets and forms retained by the laboratory contain that same degree of precision.

13. Precision and Bias[4]

13.1 *Precision*—Criteria for judging the acceptability of maximum unit weight and optimum water content results obtained by this method are given in Table 3.

TABLE 3 Precision Estimates

Conditions of Test and Test Property	Standard Deviation (1s)[A]	Acceptable Range of Two Test Results (d2s)[A]
Single Operator Precision:		
Maximum Unit Weight (lbf/ft ^{3})	0.6	1.8
Optimum Water Content (percent)	0.4	1.0
Multilaboratory Precision:		
Maximum Unit Weight (lbf/ft ^{3})	1.6	4.4
Optimum Water Content (percent)	0.7	2.1

[A] These numbers represent, respectively, the (1s) and (d2s) limits as described in Practice C670 for Preparing Precision and Bias Statements for Test Methods for Construction Materials.

NOTE 1—The precision estimates given in Table 3 are based on the analysis of test results from three pairs of AMRL proficiency samples. The data analyzed consisted of results from 144 to 253 laboratories for each of the three pairs of samples. The analysis included two classifications of fine grained soil (group symbol CL): lean clay with sand and sandy lean clay. Average maximum unit weights ranged from 125.8 lbf/ft^3 to 132.6 lbf/ft^3. Average optimum water contents ranged from 8.0 percent to 10.4 percent.

13.1.1 *Single-Operator Precision (Repeatability)*—The figures in Column 2 of Table 3 are the standard deviations that have been found to be appropriate for the conditions of test described in Column 1. Two results obtained in the same laboratory, by the same operator using the same equipment, in the shortest practical period of time, should not be considered suspect unless the difference in the two results exceeds the values given in Table 3, Column 3.

13.1.2 *Multilaboratory Precision (Reproducibility)*—The figures in Column 2 of Table 3 are the standard deviations that have been found to be appropriate for the conditions of test described in Column 1. Two results submitted by two different operators testing the same material in different laboratories shall not be considered suspect unless the difference in the two results exceeds the values given in Table 3, Column 3.

13.2 *Bias*—It is not possible to present information on bias because there is no other method of determining the values of modified maximum unit weight and modified optimum water content.

14. Keywords

14.1 compaction characteristics; density; impact compaction using modified effort; laboratory tests; modified proctor test; moisture-density curves; soil compaction

[4] Supporting data have been filed at ASTM International Headquarters and may be obtained by requesting Research Report RR:D18-1017.

Copyright by ASTM Int'l (all rights reserved); Fri Nov 21 11:39:33 EST 2014
Downloaded/printed by
Paul Jobmann (none) pursuant to License Agreement. No further reproductions authorized.

ANNEX

(Mandatory Information)

A1. VOLUME OF COMPACTION MOLD

A1.1 Scope

A1.1.1 This annex describes the method for determining the volume of a compaction mold.

A1.1.2 The volume is determined by two methods, a water-filled method and a linear-measurement method.

A1.1.3 The water filling method for the 4-in. (106.5-mm) mold, when using a balance readable to nearest g, does not yield four significant figures for its volume, just three. Based on Practice D6026, this limits the density/unit weight determinations previously presented from four to three significant figures. To prevent this limitation, the water filling method has been adjusted from that presented in early versions of this test method.

A1.2 Apparatus

A1.2.1 In addition to the apparatus listed in Section 6, the following items are required:

A1.2.1.1 *Vernier or Dial Caliper,* having a measuring range of at least 0 to 6 in. (0 to 150 mm) and readable to at least 0.001 in. (0.02 mm).

A1.2.1.2 *Inside Micrometer (optional),* having a measuring range of at least 2 to 12 in. (50 to 300 mm) and readable to at least 0.001 in. (0.02 mm).

A1.2.1.3 *Depth Micrometer (optional)* , having a measuring range of at least 0 to 6 in. (0 to 150 mm) and readable to at least 0.001 in. (0.02 mm).

A1.2.1.4 *Plastic or Glass Plates*—Two plastic or glass plates about 8 in. by 8 in. by ¼ in. thick (200 mm by 200 mm by 6 mm).

A1.2.1.5 *Thermometer or other Thermometric Device*—having a readability of 0.1°C and a maximum permissible error of 0.5°C.

A1.2.1.6 *Stopcock Grease* or similar sealant.

A1.2.1.7 *Distilled Water or De-ionized Water* Either type of water may be used to fill the mold when determining the mold volume using the water-filling method. Distilled water or de-ionized water may be purchased and is available in most grocery stores. In the procedure for the water-filling method, distilled water, or de-ionized water, is referred to as water.

A1.2.1.8 *Miscellaneous equipment*—Bulb syringe, towels, etc.

A1.3 Precautions

A1.3.1 Perform this method in an area isolated from drafts or extreme temperature fluctuations.

A1.4 Procedure

A1.4.1 *Water-Filling Method:*

A1.4.1.1 Lightly grease the bottom of the compaction mold and place it on one of the plastic or glass plates. Lightly grease the top of the mold. Be careful not to get grease on the inside of the mold. If it is necessary to use the base plate, as noted in 10.4.7, place the greased mold onto the base plate and secure with the locking studs.

A1.4.1.2 Determine the mass of the greased mold and both plastic or glass plates to the nearest 1 g and record, M_{mp}. When the base plate is being used in lieu of the bottom plastic or glass plate determine the mass of the mold, base plate and a single plastic or glass plate to be used on top of the mold to the nearest 1 g and record.

A1.4.1.3 Place the mold and the bottom plate on a firm, level surface and fill the mold with water to slightly above its rim.

A1.4.1.4 Slide the second plate over the top surface of the mold so that the mold remains completely filled with water and air bubbles are not entrapped. Add or remove water as necessary with a bulb syringe.

A1.4.1.5 Completely dry any excess water from the outside of the mold and plates.

A1.4.1.6 Determine the mass of the mold, plates and water and record to the nearest 1 g, $M_{mp,w}$.

A1.4.1.7 Determine the temperature of the water in the mold to the nearest 0.1°C and record. Determine and record the density of water from the table given in D854 or as follows:

$$\rho_{w,c} = 1.00034038 - (7.77 \times 10^{-6}) \times T - (4.95 \times 10^{-6}) \times T^2 \quad (A1.1)$$

where:

$\rho_{w,c}$ = density of water, nearest 0.00001 g/cm^3, and
T = calibration test temperature, nearest 0.1°C.

A1.4.1.8 Calculate the mass of water in the mold by subtracting the mass determined in A1.4.1.2 from the mass determined in A1.4.1.6.

A1.4.1.9 Calculate the volume of water by dividing the mass of water by the density of water. Record this volume to the nearest 0.1 cm^3 for the 4-in.(101.6-mm) mold or nearest 1 cm^3 for the 6-in. (152.4-mm) mold. To determine the volume of the mold in m^3, multiply the volume in cm^3 by 1×10^{-6}. Record this volume, as prescribed.

A1.4.1.10 If the water-filling method is being used to determine the mold's volume and checked by linear measurement method, repeat this volume determination (A1.4.1.3-A1.4.1.9) and determine and record the average value, V_w, as prescribed.

A1.4.2 *Linear Measurement Method:*

A1.4.2.1 Using either the vernier caliper or the inside micrometer (preferable), measure the inside diameter (ID) of the mold six times at the top of the mold and six times at the bottom of the mold spacing each of the six top and bottom measurements equally around the inside circumference of the mold. Record the values to the nearest 0.001 in. (0.02 mm). Determine and record the average ID to the nearest 0.001 in.

Copyright by ASTM Int'l (all rights reserved); Fri Nov 21 11:39:33 EST 2014
Downloaded/printed by
Paul Jobmann (none) pursuant to License Agreement. No further reproductions authorized.

(0.02 mm), d_{avg}. Verify that this ID is within specified tolerances, 4.000 ± 0.016 in. (101.6 ± 0.4 mm); if not, discard the mold.

A1.4.2.2 Using the vernier caliper or depth micrometer (preferably), measure the inside height of the mold to the base plate. In these measurements, make three or more measurements equally spaced around the inside circumference of the mold, and preferably one in the center of the mold, but not required (use the straightedge to facilitate the latter measurement and correct the measurement for the thickness of the straightedge). Record these values to the nearest 0.001 in. (0.02 mm). Determine and record the average of these height measurements to the nearest 0.001 in. (0.02 mm), h_{avg}. Verify that this height is within specified tolerances, 4.584 ± 0.018 in. (116.4 ± 0.5 mm); if not, discard the mold.

A1.4.2.3 Calculate the volume of the mold to four significant digits in cm^3 as follows:

$$V_{lm} = K_3 \frac{\pi \times h_{avg} \times (d_{avg})^2}{4} \quad \text{(A1.2)}$$

where:

V_{lm} = volume of mold by linear measurements, to four significant digits, cm^3,
K_3 = constant to convert measurements made in inch (in.) or mm. Use 16.387 for measurements in inches. Use 10^{-6} for measurements in mm.
π = 3.14159,
h_{avg} = average height, in. (mm), and
d_{avg} = average of the top and bottom diameters, in. (mm).

If the volume in m^3 is required, then multiply the above value by 10^{-6}.

A1.5 Comparison of Results and Standardized Volume of Mold

A1.5.1 The volume obtained by either method should be within the volume tolerance requirements of 6.1.1 and 6.1.2, using either or cm^3 or ft^3. To convert cm^3 to ft^3, divide cm^3 by 28 317, record to the nearest 0.0001 ft^3.

A1.5.2 The difference between the two methods should not exceed 0.5 % of the nominal volume of the mold, cm^3 or ft^3.

A1.5.3 Repeat the determination of volume which is most suspect, or both, if these criteria are not met.

A1.5.4 Failure to obtain satisfactory agreement between the two methods, even after several trials, is an indication that the mold is badly deformed and should be replaced.

A1.5.5 Use the volume of the mold determined using the water-filling method or linear method, or average of both methods as the standardized volume for calculating the moist density (see 11.2.2.1). This value (V) in cm^3 or m^3 shall have four significant digits. The use of a volume in ft^3, along with masses in lbm shall not be regarded as a nonconformance with this standard.

REFERENCES

(1) Johnson, A.W., and Sallberg, J.R., *Factors Influencing Compaction Test Results*, Highway Research Board, Bulletin 318, Publication 967, National Academy of Sciences-National Research Council, Washington, DC, 1962, p. 73.

(2) Head, K. H., Manual of Soil Laboratory Testing: Volume 1 Soil Classification and Compaction Tests, Pentech Press, London, Second Edition, 1992, p. 313.

(3) Earth Manual, United States Bureau of Reclamation, Part 1, Third Edition, 1998, pp. 255-260.

(4) Earth Manual, United States Bureau of Reclamation, Part 2, Third Edition, 1990.

(5) Torrey, V.H., and Donaghe, R.T., "Compaction Control of Earth-Rock Mixtures: A New Approach," *Geotechnical Testing Journal*, GTJODJ, Vol 17, No 3, September 1994, pp. 371-386.

Copyright by ASTM Int'l (all rights reserved); Fri Nov 21 11:39:33 EST 2014
Downloaded/printed by
Paul Jobmann (none) pursuant to License Agreement. No further reproductions authorized.

SUMMARY OF CHANGES

Committee D18 has identified the location of selected changes to these test methods since the last issue, D1557–09, that may impact the use of these test methods. (Approved May 1, 2012)

(*1*) Revised 6.2.2.1 and 10.4.5.

(*2*) Added a mercury caveat in the Scope.

ASTM International takes no position respecting the validity of any patent rights asserted in connection with any item mentioned in this standard. Users of this standard are expressly advised that determination of the validity of any such patent rights, and the risk of infringement of such rights, are entirely their own responsibility.

This standard is subject to revision at any time by the responsible technical committee and must be reviewed every five years and if not revised, either reapproved or withdrawn. Your comments are invited either for revision of this standard or for additional standards and should be addressed to ASTM International Headquarters. Your comments will receive careful consideration at a meeting of the responsible technical committee, which you may attend. If you feel that your comments have not received a fair hearing you should make your views known to the ASTM Committee on Standards, at the address shown below.

This standard is copyrighted by ASTM International, 100 Barr Harbor Drive, PO Box C700, West Conshohocken, PA 19428-2959, United States. Individual reprints (single or multiple copies) of this standard may be obtained by contacting ASTM at the above address or at 610-832-9585 (phone), 610-832-9555 (fax), or service@astm.org (e-mail); or through the ASTM website (www.astm.org). Permission rights to photocopy the standard may also be secured from the ASTM website (www.astm.org/COPYRIGHT/).

Copyright by ASTM Int'l (all rights reserved); Fri Nov 21 11:39:33 EST 2014
Downloaded/printed by
Paul Jobmann (none) pursuant to License Agreement. No further reproductions authorized.

Designation: D1633 – 00 (Reapproved 2007)

Standard Test Methods for Compressive Strength of Molded Soil-Cement Cylinders[1]

This standard is issued under the fixed designation D1633; the number immediately following the designation indicates the year of original adoption or, in the case of revision, the year of last revision. A number in parentheses indicates the year of last reapproval. A superscript epsilon (ε) indicates an editorial change since the last revision or reapproval.

This standard has been approved for use by agencies of the U.S. Department of Defense.

1. Scope*

1.1 This test method covers the determination of the compressive strength of soil-cement using molded cylinders as test specimens.

1.2 Two alternative procedures are provided as follows:

1.2.1 *Method A*—This procedure uses a test specimen 4.0 in. (101.6 mm) in diameter and 4.584 in. (116.4 mm) in height. Height to diameter ratio equals 1.15. This test method made be used only on materials with 30 % or less retained on the ¾-in. (19.0-mm) sieve. See Note 3.

1.2.2 *Method B*—This procedure uses a test specimen 2.8 in. (71.1 mm) in diameter and 5.6 in. (142.2 mm) in height. Height to diameter ratio equals 2.00. This test method is applicable to those materials that pass the No. 4 (4.75-mm) sieve.

1.3 All observed and calculated values shall conform to the guidelines for significant digits and rounding established in Practice D6026.

1.4 The values stated in inch-pound units are to be regarded as standard, except as noted in 1.4.1 – 1.4.3. The values given in parentheses are mathematical conversions to SI units, and are provided for information only and are not considered standard.

1.4.1 The gravitational system of inch-pound units is used when dealing with inch-pound units. In this system, the pound (lbf) represents a unit of force (weight), while the unit for mass is slugs.

1.4.2 The slug unit of mass is almost never used in commercial practice (density, scales, balances, etc.). Therefore, the standard unit for mass in this standard is either kilogram (kg) or gram (g), or both. Also, the equivalent inch-pound unit (slug) is not given.

1.4.3 It is common practice in the engineering/construction profession in the United States to use concurrently pounds to represent both a unit of mass (lbm) and of force (lbf). This use combines two separate system of units, the absolute system and the gravitational system. It is scientifically undesirable to combine the use of two separate sets of inch-pound units within a single standard. As stated in 1.4.2, this standard uses the gravitational system and does not present the slug unit for mass. However, the use of scales or balances recording pounds of mass (lbm) or the recording of density in lbm/ft^3 shall not be regarded as nonconformance with this standard.

1.5 *This standard does not purport to address all of the safety concerns, if any, associated with its use. It is the responsibility of the user of this standard to establish appropriate safety and health practices and determine the applicability of regulatory limitations prior to use.*

2. Referenced Documents

2.1 *ASTM Standards:*[2]

C42/C42M Test Method for Obtaining and Testing Drilled Cores and Sawed Beams of Concrete

D559 Test Methods for Wetting and Drying Compacted Soil-Cement Mixtures (Withdrawn 2012)[3]

D560 Test Methods for Freezing and Thawing Compacted Soil-Cement Mixtures (Withdrawn 2012)[3]

D653 Terminology Relating to Soil, Rock, and Contained Fluids

D1632 Practice for Making and Curing Soil-Cement Compression and Flexure Test Specimens in the Laboratory

D2216 Test Methods for Laboratory Determination of Water (Moisture) Content of Soil and Rock by Mass

D3740 Practice for Minimum Requirements for Agencies Engaged in Testing and/or Inspection of Soil and Rock as Used in Engineering Design and Construction

D4753 Guide for Evaluating, Selecting, and Specifying Balances and Standard Masses for Use in Soil, Rock, and Construction Materials Testing

D6026 Practice for Using Significant Digits in Geotechnical Data

E4 Practices for Force Verification of Testing Machines

[1] This test method is under the jurisdiction of ASTM Committee D18 on Soil and Rock and is the direct responsibility of Subcommittee D18.15 on Stabilization With Admixtures.

Current edition approved Feb. 1, 2007. Published March 2007. Originally approved in 1959. Last previous edition approved in 2000 as D1633 – 00. DOI: 10.1520/D1633-00R07.

[2] For referenced ASTM standards, visit the ASTM website, www.astm.org, or contact ASTM Customer Service at service@astm.org. For *Annual Book of ASTM Standards* volume information, refer to the standard's Document Summary page on the ASTM website.

[3] The last approved version of this historical standard is referenced on www.astm.org.

***A Summary of Changes section appears at the end of this standard**

Copyright © ASTM International, 100 Barr Harbor Drive, PO Box C700, West Conshohocken, PA 19428-2959. United States

Copyright by ASTM Int'l (all rights reserved); Fri Nov 21 11:39:31 EST 2014
Downloaded/printed by
Paul Jobmann (none) pursuant to License Agreement. No further reproductions authorized.

3. Terminology

3.1 For definitions of terms used in this test method, refer to Terminology D653.

4. Significance and Use

4.1 Method A makes use of the same compaction equipment and molds commonly available in soil laboratories and used for other soil-cement tests. It is considered that Method A gives a relative measure of strength rather than a rigorous determination of compressive strength. Because of the lesser height to diameter ratio (1.15) of the cylinders, the compressive strength determined by Method A will normally be greater than that for Method B.

4.2 Method B, because of the greater height to diameter ratio (2.00), gives a better measure of compressive strength from a technical viewpoint since it reduces complex stress conditions that may occur during the shearing of Method A specimens.

4.3 In practice, Method A has been more commonly used than Method B. As a result, it has been customary to evaluate or specify compressive strength values as determined by Method A. A factor for converting compressive strength values based on height to diameter ratio is given in Section 8.[4]

NOTE 1—The agency performing this test method can be evaluated in accordance with Practice D3740. Not withstanding statements on precision and bias contained in this test method: the precision of this test method is dependent on the competence of the personnel performing it and the suitability of the equipment and facilities used. Agencies that meet the criteria of Practice D3740 are generally considered capable of competent and objective testing. Users of this test method are cautioned that compliance with Practice D3740 does not, in itself, ensure reliable testing. Reliable testing depends on many factors; Practice D3740 provides a means of evaluating some of these factors.

5. Apparatus

5.1 *Compression Testing Machine*—This machine may be of any type having sufficient capacity and control to provide the rate of loading prescribed in 7.2. It shall conform to the requirements of Section 15 of Practices E4. The testing machine shall be equipped with two steel bearing blocks with hardened faces (Note 2), one of which is a spherically seated head block that normally will bear on the upper surface of the specimen, and the other a plain rigid block on which the specimen will rest. The bearing faces shall be at least as large, and preferably slightly larger, than the surface of the specimen to which the load is applied. The bearing faces, when new, shall not depart from a plane by more than 0.0005 in. (0.013 mm) at any point, and they shall be maintained within a permissible variation limit of 0.001 in. (0.02 mm). In the spherically seated block, the diameter of the sphere shall not greatly exceed the diameter of the specimen and the center of the sphere shall coincide with the center of the bearing face. The movable portion of this block shall be held closely in the spherical seat, but the design shall be such that the bearing face can be rotated freely and tilted through small angles in any direction.

NOTE 2—It is desirable that the bearing faces of blocks used for compression testing of soil-cement have a hardness of not less than 60 HRC.

5.2 *Molds and Compaction Equipment,* in accordance with Test Methods D559 or D560 for Method A; Practice D1632 for Method B.

6. Test Specimens

6.1 Mold the test specimens as follows:

6.1.1 *Method A*—Specimens are 4.0 in. (101.6 mm) in diameter and 4.584 in. (116.4 mm) in height and are molded in accordance with Test Methods D559 or D560.

6.1.2 *Method B*—Specimens are 2.8 in. (71.1 mm) in diameter and 5.6 in. (142.2 mm) in height and are molded in accordance with Practice D1632.

NOTE 3—These methods may be used for testing specimens of other sizes. If the soil sample includes material retained on the 4.75-mm (No. 4) sieve, it is recommended that Method A be used, or that larger test specimens, 4.0 in. (101.6 mm) in diameter and 8.0 in. (203.2 mm) in height, be molded in a manner similar to Method B.

6.2 Moist cure the specimens in accordance with Practice D1632.

6.3 At the end of the moist-cure period, immerse the specimens in water for 4 h.

6.4 Remove the specimens from the water and make compression tests as soon as practicable, keeping specimens moist by a wet burlap or blanket covering.

NOTE 4—Other conditioning procedures, such as air or oven drying, alternate wetting and drying, or alternate freezing and thawing may be specified after an initial moist curing period. Curing and conditioning procedures shall be given in detail in the report.

6.5 Check the smoothness of the faces with a straightedge. If necessary, cap the faces to meet the requirements of the section on Capping Specimens of Practice D1632.

7. Procedure

7.1 Place the lower bearing block on the table or platen of the testing machine directly under the spherically seated (upper) bearing block. Place the specimen on the lower bearing block, making certain that the vertical axis of the specimen is aligned with the center of thrust of the spherically seated block. As this block is brought to bear on the specimen, rotate its movable portion gently by hand so that uniform seating is obtained.

7.2 Apply the load continuously and without shock. A screw power testing machine, with the moving head operating at approximately 0.05 in. (1 mm)/min when the machine is running idle, may be used. With hydraulic machines, adjust the loading to a constant rate within the limits of 20 ± 10 psi (140 ± 70 kPa)/s, depending upon the strength of the specimen. Record the total load at failure of the test specimen to the nearest 10 lbf (40 N).

8. Calculation

8.1 Calculate the unit compressive strength of the specimen by dividing the maximum load by the cross-sectional area.

NOTE 5—If desired, make allowance for the ratio of height to diameter

[4] For additional discussion on the significance and use of compressive strength results, see the *Soil-Cement Laboratory Handbook* , Chapter 4, Portland Cement Association, Skokie, IL, 1971, pp 31 and 32.

Copyright by ASTM Int'l (all rights reserved); Fri Nov 21 11:39:31 EST 2014
Downloaded/printed by
Paul Jobmann (none) pursuant to License Agreement. No further reproductions authorized.

(h/d) by multiplying the compressive strength of Method B specimens by the factor 1.10. This converts the strength for an h/d ratio of 2.00 to that for the h/d ratio of 1.15 commonly used in routine testing of soil-cement (see Section 4). This conversion is based on that given in Method C42/C42M, which has been found applicable for soil-cement.

9. Report

9.1 The report shall include the following:

9.1.1 Specimen identification number,

9.1.2 Diameter and height, in. (mm),

9.1.3 Cross-sectional areas, in.^{2} (mm ^{2}),

9.1.4 Maximum load, to the nearest 10 lbf (40 N),

9.1.5 Conversion factor for height to diameter ratio (see Note 4), if used,

9.1.6 Compressive strength, calculated to the nearest 5 psi (35 kPa),

9.1.7 Age of specimen, and

9.1.8 Details of curing and conditioning periods, and water content in accordance with Test Method D2216 at the time of test.

10. Precision and Bias

10.1 The precision and bias of this test method have not been established by an interlaboratory test program. However, based on the test data that are available, the following may serve as a guide as to the variability of compressive strength test results.

10.1.1 Tests were performed in a single lab on 122 sets of duplicate specimens molded from 21 different soil materials. The average difference in strength on duplicate specimens was 8.1 % and the median difference was 6.2 %. These values are expressed as the percent of the average strength of the two specimens as follows:

$$\%\ \text{Difference} = \frac{(\text{high value} - \text{low value})}{(\text{high value} + \text{low value})/2} \times 100 \qquad (1)$$

The distribution of the variation is shown in Fig. 1. The data[5,6] cover a wide range of cement contents and compressive strengths.

11. Keywords

11.1 compressive strength; soil-cement; soil stabilization

[5] Packard, R. G., "Alternate Measures for Measuring Freeze-Thaw and Wet-Dry Resistance of Soil-Cement Mixtures," *Highway Research Bulletin*, 353, Transportation Research Board, 1962, pp 8–41.

[6] Packard, R. G., and Chapman, G. A., "Developments in Durability Testing of Soil-Cement Mixtures," Highway Research Record No. 36, Transportation Research Board, 1963, pp 97–122.

Copyright by ASTM Int'l (all rights reserved); Fri Nov 21 11:39:31 EST 2014
Downloaded/printed by
Paul Jobmann (none) pursuant to License Agreement. No further reproductions authorized.

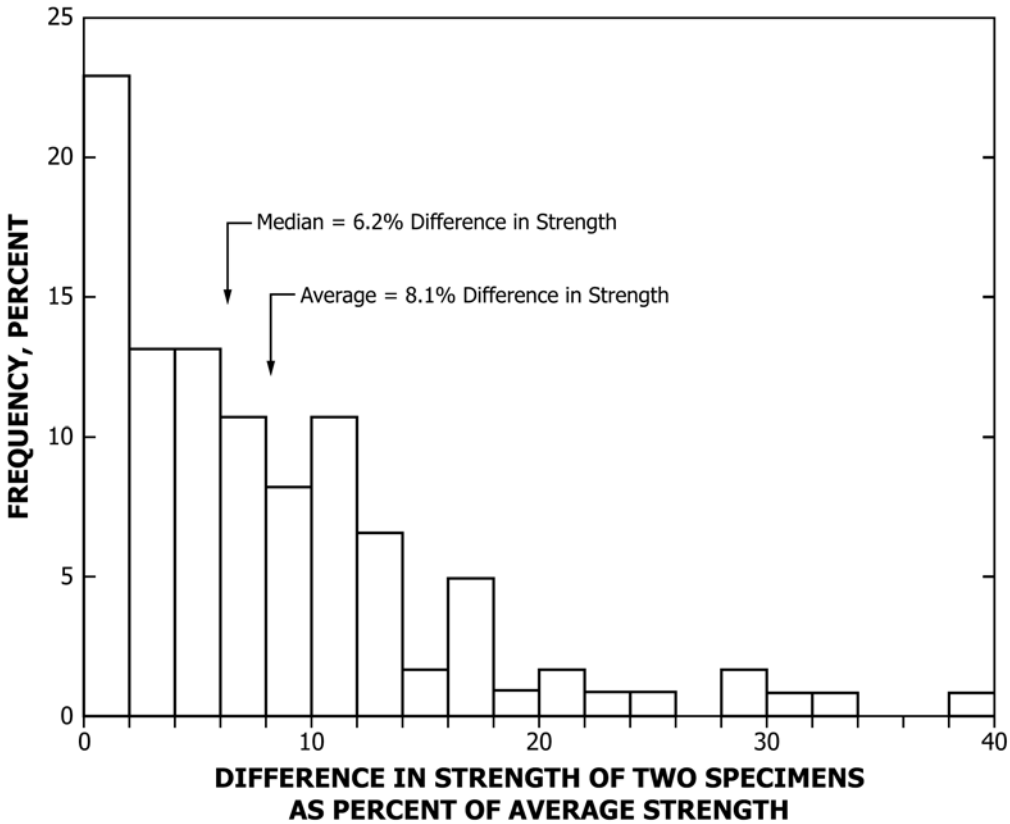

FIG. 1 Distribution of Variation of Test Results for 122 Sets of Duplicate Specimens

SUMMARY OF CHANGES

In accordance with Committee D18 policy, this section identifies the location of changes to this standard since the last edition (1996) that may impact the use of this standard.

(*1*) Changed title to clarify that two methods are presented.
(*2*) Added new sentence at the end of 1.2.1 to identify applicable materials.
(*3*) Added a new sentence at the end of 1.2.2 to identify applicable materials.
(*4*) Added new 1.3 to reference Practice D6026.
(*5*) Revised 1.4 to clarify units used in the test method.
(*6*) Added Terminology D653, Test Method D2216, Specification D4753, and Practice D6026 to Section 2, Referenced Documents.
(*7*) Added new footnote 4 to reference *Annual Book of ASTM Standards*, Vol 04.09 and renumbered the remaining footnotes.
(*8*) Added new Section 3 on Terminology. Renumbered remaining sections.
(*9*) Added reference to Test Method D2216 in 9.1.8.
(*10*) Changed "crushing" to "shearing" in 4.2.
(*11*) Changed "moisture" to "water" in 9.1.8.
(*12*) Prepared new Summary of Changes.

Copyright by ASTM Int'l (all rights reserved); Fri Nov 21 11:39:31 EST 2014
Downloaded/printed by
Paul Jobmann (none) pursuant to License Agreement. No further reproductions authorized.

ASTM International takes no position respecting the validity of any patent rights asserted in connection with any item mentioned in this standard. Users of this standard are expressly advised that determination of the validity of any such patent rights, and the risk of infringement of such rights, are entirely their own responsibility.

This standard is subject to revision at any time by the responsible technical committee and must be reviewed every five years and if not revised, either reapproved or withdrawn. Your comments are invited either for revision of this standard or for additional standards and should be addressed to ASTM International Headquarters. Your comments will receive careful consideration at a meeting of the responsible technical committee, which you may attend. If you feel that your comments have not received a fair hearing you should make your views known to the ASTM Committee on Standards, at the address shown below.

This standard is copyrighted by ASTM International, 100 Barr Harbor Drive, PO Box C700, West Conshohocken, PA 19428-2959, United States. Individual reprints (single or multiple copies) of this standard may be obtained by contacting ASTM at the above address or at 610-832-9585 (phone), 610-832-9555 (fax), or service@astm.org (e-mail); or through the ASTM website (www.astm.org). Permission rights to photocopy the standard may also be secured from the Copyright Clearance Center, 222 Rosewood Drive, Danvers, MA 01923, Tel: (978) 646-2600; http://www.copyright.com/

Copyright by ASTM Int'l (all rights reserved); Fri Nov 21 11:39:31 EST 2014
Downloaded/printed by
Paul Jobmann (none) pursuant to License Agreement. No further reproductions authorized.

Designation: D1883 – 07$^{\varepsilon 2}$

Standard Test Method for CBR (California Bearing Ratio) of Laboratory-Compacted Soils[1]

This standard is issued under the fixed designation D1883; the number immediately following the designation indicates the year of original adoption or, in the case of revision, the year of last revision. A number in parentheses indicates the year of last reapproval. A superscript epsilon (ε) indicates an editorial change since the last revision or reapproval.

This standard has been approved for use by agencies of the Department of Defense.

ε^1 NOTE—Editorially corrected units in Section 6.2 in May 2009.
ε^2 NOTE—Editorially corrected units in Section 10.3 in July 2009.

1. Scope*

1.1 This test method covers the determination of the CBR (California Bearing Ratio) of pavement subgrade, subbase, and base course materials from laboratory compacted specimens. The test method is primarily intended for (but not limited to) evaluating the strength of materials having maximum particle sizes less than ¾ in. (19 mm).

1.2 When materials having maximum particle sizes greater than ¾ in. (19 mm) are to be tested, this test method provides for modifying the gradation of the material so that the material used for tests all passes the ¾-in. sieve while the total gravel (+No. 4 to 3 in.) fraction remains the same. While traditionally this method of specimen preparation has been used to avoid the error inherent in testing materials containing large particles in the CBR test apparatus, the modified material may have significantly different strength properties than the original material. However, a large experience base has developed using this test method for materials for which the gradation has been modified, and satisfactory design methods are in use based on the results of tests using this procedure.

1.3 Past practice has shown that CBR results for those materials having substantial percentages of particles retained on the No. 4 sieve are more variable than for finer materials. Consequently, more trials may be required for these materials to establish a reliable CBR.

1.4 This test method provides for the determination of the CBR of a material at optimum water content or a range of water content from a specified compaction test and a specified dry unit weight. The dry unit weight is usually given as a percentage of maximum dry unit weight determined by Test Methods D698 or D1557.

1.5 The agency requesting the test shall specify the water content or range of water content and the dry unit weight for which the CBR is desired.

1.6 Unless specified otherwise by the requesting agency, or unless it has been shown to have no effect on test results for the material being tested, all specimens shall be soaked prior to penetration.

1.7 For the determination of CBR of field compacted materials, see Test Method D4429.

1.8 The values stated in inch-pound units are to be regarded as the standard. The SI equivalents shown in parentheses may be approximate.

1.9 All observed and calculated values shall conform to the guidelines for significant digits and rounding established in Practice D6026.

1.9.1 The procedures used to specify how data are collected, recorded or calculated in this standard are regarded as the industry standard. In addition they are representative of the significant digits that generally should be retained. The procedures used do not consider material variation, purpose for obtaining the data, special purpose studies, or any considerations for the user's objectives, and it is common practice to increase or reduce significant digits or reported data to be commensurate with these considerations. It is beyond the scope of this standard to consider significant digits used in analytical methods for engineering design.

1.10 *This standard does not purport to address all of the safety problems, if any, associated with its use. It is the responsibility of the user of this standard to establish appropriate safety and health practices and determine the applicability of regulatory limitations prior to use.*

[1] This test method is under the jurisdiction of ASTM Committee D18 on Soil and Rock and is the direct responsibility of Subcommittee D18.05 on Strength and Compressibility of Soils.

Current edition approved Nov. 15, 2007. Published December 2007. Originally approved in 1961. Last previous edition approved in 2005 as D1883 – 05. DOI: 10.1520/D1883-07E02.

***A Summary of Changes section appears at the end of this standard**

Copyright © ASTM International, 100 Barr Harbor Drive, PO Box C700, West Conshohocken, PA 19428-2959. United States

Copyright by ASTM Int'l (all rights reserved); Mon Nov 24 13:18:56 EST 2014
Downloaded/printed by
Paul Jobmann (none) pursuant to License Agreement. No further reproductions authorized.

2. Referenced Documents

2.1 *ASTM Standards:*[2]

D422 Test Method for Particle-Size Analysis of Soils

D653 Terminology Relating to Soil, Rock, and Contained Fluids

D698 Test Methods for Laboratory Compaction Characteristics of Soil Using Standard Effort (12 400 ft-lbf/ft^3 (600 kN-m/m^3))

D1557 Test Methods for Laboratory Compaction Characteristics of Soil Using Modified Effort (56,000 ft-lbf/ft^3 (2,700 kN-m/m^3))

D2168 Practices for Calibration of Laboratory Mechanical-Rammer Soil Compactors

D2216 Test Methods for Laboratory Determination of Water (Moisture) Content of Soil and Rock by Mass

D2487 Practice for Classification of Soils for Engineering Purposes (Unified Soil Classification System)

D2488 Practice for Description and Identification of Soils (Visual-Manual Procedure)

D3740 Practice for Minimum Requirements for Agencies Engaged in Testing and/or Inspection of Soil and Rock as Used in Engineering Design and Construction

D4318 Test Methods for Liquid Limit, Plastic Limit, and Plasticity Index of Soils

D4429 Test Method for CBR (California Bearing Ratio) of Soils in Place

D4753 Guide for Evaluating, Selecting, and Specifying Balances and Standard Masses for Use in Soil, Rock, and Construction Materials Testing

D6026 Practice for Using Significant Digits in Geotechnical Data

E11 Specification for Woven Wire Test Sieve Cloth and Test Sieves

3. Terminology

3.1 *Definitions*—All definitions are in accordance with Terminology D653.

3.2 *Definitions of Terms Specific to This Standard:*

3.2.1 *water content of the compaction specimen,* w_i—water content in percent of material used to compact the test specimen.

3.2.2 *water content top 1 in. (25.4-mm) after soaking* w_s—water content in percent of upper 1 in. (25.4 mm) of material removed after soaking and penetration.

3.2.3 *water content after testing,* w_f—water content in percent of material after soaking and final penetration; does not include material described in 3.2.2.

3.2.4 *dry density as compacted and before soaking,* ρ_{di}—dry density of the as-compacted test specimen using the measured wet mass and calculating the dry mass using the water content defined in 3.2.1.

[2] For referenced ASTM standards, visit the ASTM website, www.astm.org, or contact ASTM Customer Service at service@astm.org. For *Annual Book of ASTM Standards* volume information, refer to the standard's Document Summary page on the ASTM website.

4. Summary of Test Method

4.1 The California Bearing Ratio (CBR) test is a load test applied to the surface and used in soil investigations as an aid to the design of pavements. The laboratory test uses a circular piston to penetrate material compacted in a mold at a constant rate of penetration. The CBR is expressed as the ratio of the unit load on the piston required to penetrate 0.1 in. (2.5 mm) and 0.2 in (5 mm) of the test soil to the unit load required to penetrate a standard material of well-graded crusted stone.

4.2 This test method is used to determine the CBR of a material compacted in a specified mold. It is incumbent on the requesting agencies to specify the scope of testing to satisfy agency protocol or specific design requirements. Possible scope of testing includes:

4.2.1 CBR penetration tests are performed on each point of a compaction test performed in accordance with Method C of D698 or D1557. The CBR mold with the spacer disk specified in this standard has the same internal dimensions as a 6-in. (150-mm) diameter compaction mold.

4.2.2 Another alternative is for CBR test to be performed on material compacted to a specific water content and density. Alternatively, a water content range may be stated for one or more density values. This will often require a series of specimens prepared using two or three compactive efforts for the specified water content or over the range of water contents requested. The compactive efforts are achieved by following procedures of D698 or D1557 but varying the blows per layer to produce densities above and below the desired density.

5. Significance and Use

5.1 This test method is used to evaluate the potential strength of subgrade, subbase, and base course material, including recycled materials for use in road and airfield pavements. The CBR value obtained in this test forms an integral part of several flexible pavement design methods.

5.2 For applications where the effect of compaction water content on CBR is small, such as cohesionless, coarse-grained materials, or where an allowance is made for the effect of differing compaction water contents in the design procedure, the CBR may be determined at the optimum water content of a specified compaction effort. The dry unit weight specified is normally the minimum percent compaction allowed by the using agency's field compaction specification.

5.3 For applications where the effect of compaction water content on CBR is unknown or where it is desired to account for its effect, the CBR is determined for a range of water contents, usually the range of water content permitted for field compaction by using agency's field compaction specification.

5.4 The criteria for test specimen preparation of self cementing (and other) materials which gain strength with time must be based on a geotechnical engineering evaluation. As directed by the engineer, self-cementing materials shall be properly cured until bearing ratios representing long term service conditions can be measured.

NOTE 1—The agency performing this test can be evaluated in accordance with Practice D3740. Notwithstanding the statements on precision and bias contained in this test method, the precision of this test method is

Copyright by ASTM Int'l (all rights reserved); Mon Nov 24 13:18:56 EST 2014
Downloaded/printed by
Paul Jobmann (none) pursuant to License Agreement. No further reproductions authorized.

dependent on the competence of the personnel performing it, and the suitability of the equipment and facilities used. Agencies that meet the criteria of Practice D3740 are generally considered capable of competent and objective testing. Users of this test method are cautioned that compliance with Practice D3740 does not in itself ensure reliable testing. Reliable testing depends on many factors; Practice D3740 provides a means of evaluating some of those factors.

6. Apparatus

6.1 *Loading Machine*—The loading machine shall be equipped with a movable head or base that travels at a uniform (not pulsating) rate of 0.05 in. (1.27 mm)/min for use in forcing the penetration piston into the specimen. The load rate of 0.05 in. (1.27 mm)/min shall be maintained within ±20% over the range of loads developed during penetration. The minimum capacity of the loading machine shall be based on the requirements indicated in Table 1.

6.1.1 The machine shall be equipped with a load-indicating device matched to the anticipated maximum penetration load: 10 lbf (44 N) or less for a 10-kip (44.5-kN) capacity; 5 lbf (22 N) for 5-kip (22.3-kN) and 2 lbf (8.9 N) for 2.5-kip (11.2-kN).

6.1.2 Penetration measuring device (such as a mechanical dial indicator or electronic displacement transducer) that can be read to the nearest 0.001 in. (0.025 mm) and associated mounting hardware. A mounting assembly that connects the deformation measuring device to the penetrating piston and the edge of the mold will give accurate penetration measurements. However, mounting the deformation holder assembly to a stressed component of the load frame (such as tie rods) will introduce inaccuracies of penetration measurements.

6.2 *Mold*—The mold shall be a rigid metal cylinder with an inside diameter of 6 ± 0.026 in. (152.4 ± 0.66 mm) and a height of 7 ± 0.018 in. (177.8 ± 0.46 mm). It shall be provided with a metal extension collar at least 2.0 in. (50.8 mm) in height and a metal base plate having at least twenty eight 1⁄16-in. (1.59-mm) diameter holes uniformly spaced over the plate within the inside circumference of the mold. When assembled with spacer disc in place in the bottom of the mold, the mold shall have an internal volume (excluding extension collar) of 0.075 ± 0.0009 ft^3 (2124 ± 25 cm^3). Fig. 1 shows a satisfactory mold design. A calibration procedure should be used to confirm the actual volume of the mold with the spacer disk inserted. Suitable calibration procedures are contained in Test Methods D698 and D1557.

6.3 *Spacer Disk*—A circular metal spacer disc (see Fig. 1) having a minimum outside diameter of 5 15⁄16 in. (150.8 mm) but no greater than will allow the spacer disc to easily slip into the mold. The spacer disc shall be 2.416 ± 0.005 in. (61.37 ± 0.127 mm) in height.

6.4 *Rammer*—A rammer as specified in either Test Methods D698 or D1557 except that if a mechanical rammer is used it must be equipped with a circular foot, and when so equipped, must provide a means for distributing the rammer blows uniformly over the surface of the soil when compacting in a 6-in. (152.4-mm) diameter mold. The mechanical rammer must be calibrated and adjusted in accordance with Test Methods D2168.

TABLE 1 Minimum Load Capacity

Maximum Measurable CBR	Minimum Load Capacity (lbf)	(kN)
20	2500	11.2
50	5000	22.3
>50	10 000	44.5

6.5 *Expansion-Measuring Apparatus*— An adjustable metal stem and perforated metal plate, similar in configuration to that shown in Fig. 1. The perforated plate shall be 5⅞ to 5 15⁄16 in. (149.23 to 150.81 mm) in diameter and have at least forty-two 1⁄16-in. (1.59-mm) diameter holes uniformly spaced over the plate. A metal tripod to support the dial gauge for measuring the amount of swell during soaking is also required. The expansion measuring apparatus shall not weigh more than 2.8 lbf (1.27 kg).

6.6 *Weights*—One or two annular metal weights having a total mass of 4.54 ± 0.02 kg and slotted metal weights each having masses of 2.27 ± 0.02 kg. The annular weight shall be 5⅞ to 5 15⁄16 in. (149.23 to 150.81 mm) in diameter and shall have a center hole of approximately 2⅛ in. (53.98 mm).

6.7 *Penetration Piston*—A metal piston 1.954 ± 0.005 in. (49.63 ± 0.13 mm) in diameter and not less than 4 in. (101.6 mm) long (see Fig. 1). If, from an operational standpoint, it is advantageous to use a piston of greater length, the longer piston may be used.

6.8 *Swell Measurement Device*—Generally mechanical dial indicators capable of reading to 0.001 in. (0.025 mm) with a range of 0.200-in. (5-mm) minimum.

6.9 *Balance*—A class GP5 balance meeting the requirements of Specifications D4753 for a balance of 1-g readability.

6.10 *Drying Oven*—Thermostatically controlled, preferably of a forced-draft type and capable of maintaining a uniform temperature of 230 ± 9°F (110 ± 5°C) throughout the drying chamber.

6.11 *Sieves*—3/4 in. (19 mm) and No. 4 (4.75 mm), conforming to the requirements of Specification E11.

6.12 *Filter Paper*—Fast filtering, high wet strength filter paper, 15-cm diameter.

6.13 *Straightedge*—A stiff metal straightedge of any convenient length but not less than 10 in. (254 mm). The total length of the straightedge shall be machined straight to a tolerance of ±0.005 in. (±0.1 mm). The scraping edge shall be beveled if it is thicker than 1/8 in. (3 mm).

6.14 *Soaking Tank or Pan*—A tank or pan of sufficient depth and breath to allow free water around and over the assembled mold. The tank or pan should have a bottom grating that allows free access of water to the perforations in the mold's base.

6.15 *Mixing Tools*—Miscellaneous tools such as mixing pan, spoon, trowel, spatula, etc., or a suitable mechanical device for thoroughly mixing the sample of soil with water.

7. Sample

7.1 The specimen(s) for compaction shall be prepared in accordance with the procedures given in Method C of Test

Copyright by ASTM Int'l (all rights reserved); Mon Nov 24 13:18:56 EST 2014
Downloaded/printed by
Paul Jobmann (none) pursuant to License Agreement. No further reproductions authorized.

TABLE 2 Metric Equivalents

Inch-Pound Units, in.	Metric Equivalent, mm	Inch-Pound Units, in.	Metric Equivalent, mm	Inch-Pound Units, in.	Metric Equivalent, mm
0.003	0.076	19/32	15.08	3½	88.90
0.005	0.127	⅝	15.88	3¾	95.25
0.135	3.43	¾	19.10	4¼	108.0
0.201	5.11	15/16	23.81	4½	114.3
0.4375	11.11	1	25.40	4¾	120.7
0.4378	11.12	1⅛	28.58	5⅞	149.2
0.510	12.95	1¼	31.8	5 15/16	150.8
0.633	16.08	1⅜	34.9	6	152.0
1.370	34.60	1½	38.10	6 7/32	158.0
1.375	34.93	1¾	44.5	6½	165.1
1.954	49.63	1 13/16	46.04	7	177.8
2.416	61.37	1 15/16	49.21	7½	190.1
1/16	1.59	2	50.80	8⅜	212.7
7/32	5.56	2⅛	53.98	8½	215.9
¼	6.35	2⅕	55.9	9⅜	238.1
⅜	9.53	2¼	57.2	14¼	362.0
7/16	11.11	2½	63.50	18	457.2
15/32	11.91	2¾	69.85	32¼	719.2
½	12.70	2 31/32	75.41	36⅝	930.3
17/32	13.49	3	76.20	39	990.6

Inch-Pound Units, lb	Metric Equivalent, kg	Inch-Pound Units, psi	Metric Equivalent, MPa
0.04	0.02	200	1.4
0.05	0.02	400	2.8
0.12	0.05	600	4.1
0.59	0.27	800	5.5
0.71	0.32	1000	6.9
0.75	0.34	1200	8.3
3.20	1.45	1400	9.7
5.00	2.27		
10.00	4.54		

Methods D698 or D1557 for compaction in a 6-in. (152.4-mm) mold except as follows:

7.1.1 If all material passes a ¾-in. (19-mm) sieve, the entire gradation shall be used for preparing specimens for compaction without modification. If material is retained on the ¾-in. (19-mm) sieve, the material retained on the ¾-in. (19-mm) sieve shall be removed and replaced by an equal mass of material passing the ¾-in. (19-mm) sieve and retained on the No. 4 sieve obtained by separation from portions of the sample not used for testing.

8. Test Specimens

8.1 *Bearing Ratio at Optimum Water Content Only*—Using material prepared as described in 7.1, conduct a control compaction test with a sufficient number of test specimens to establish the optimum water content for the soil using the compaction method specified, either Test Methods D698 or D1557. A previously performed compaction test on the same material may be substituted for the compaction test just described, provided that if the sample contains material retained on the ¾-in. (19-mm) sieve, soil prepared as described in 7.1 is used (Note 2).

NOTE 2—Maximum dry unit weight obtained from a compaction test performed in a 4-in. (101.6-mm) diameter mold may be slightly greater than the maximum dry unit weight obtained from compaction in the 6-in. (152.4-mm) compaction mold or CBR mold.

8.1.1 For cases where the CBR is desired at 100 % maximum dry unit weight and optimum water content, compact a specimen using the specified compaction procedure, either Test Methods D698 or D1557, from soil prepared to within ±0.5 percentage point of optimum water content determined in accordance with Test Method D2216.

NOTE 3—Where the maximum dry unit weight was determined from compaction in the 4-in. (101.6-mm) mold, it may be necessary to compact specimens as described in 8.1.2, using 75 blows per layer or some other value sufficient to produce a specimen having a density equal to or greater than that required.

8.1.2 Where the CBR is desired at optimum water content and some percentage of maximum dry unit weight, compact three specimens from soil prepared to within ±0.5 percentage point of optimum water content and using the specified compaction but using a different number of blows per layer for each specimen. The number of blows per layer shall be varied as necessary to prepare specimens having unit weights above and below the desired value. Typically, if the CBR for soil at 95 % of maximum dry unit weight is desired, specimens compacted using 56, 25, and 10 blows per layer is satisfactory. Penetration shall be performed on each of these specimens.

8.2 *Bearing Ratio for a Range of Water Contents*—Prepare specimens in a manner similar to that described in 8.1 except that each specimen used to develop the compaction curve shall be penetrated. In addition, the complete water content-unit weight relationship for the 25-blow and 10-blow per layer compactions shall be developed and each test specimen compacted shall be penetrated. Perform all compaction in the CBR mold. In cases where the specified unit weight is at or near

Copyright by ASTM Int'l (all rights reserved); Mon Nov 24 13:18:56 EST 2014
Downloaded/printed by
Paul Jobmann (none) pursuant to License Agreement. No further reproductions authorized.

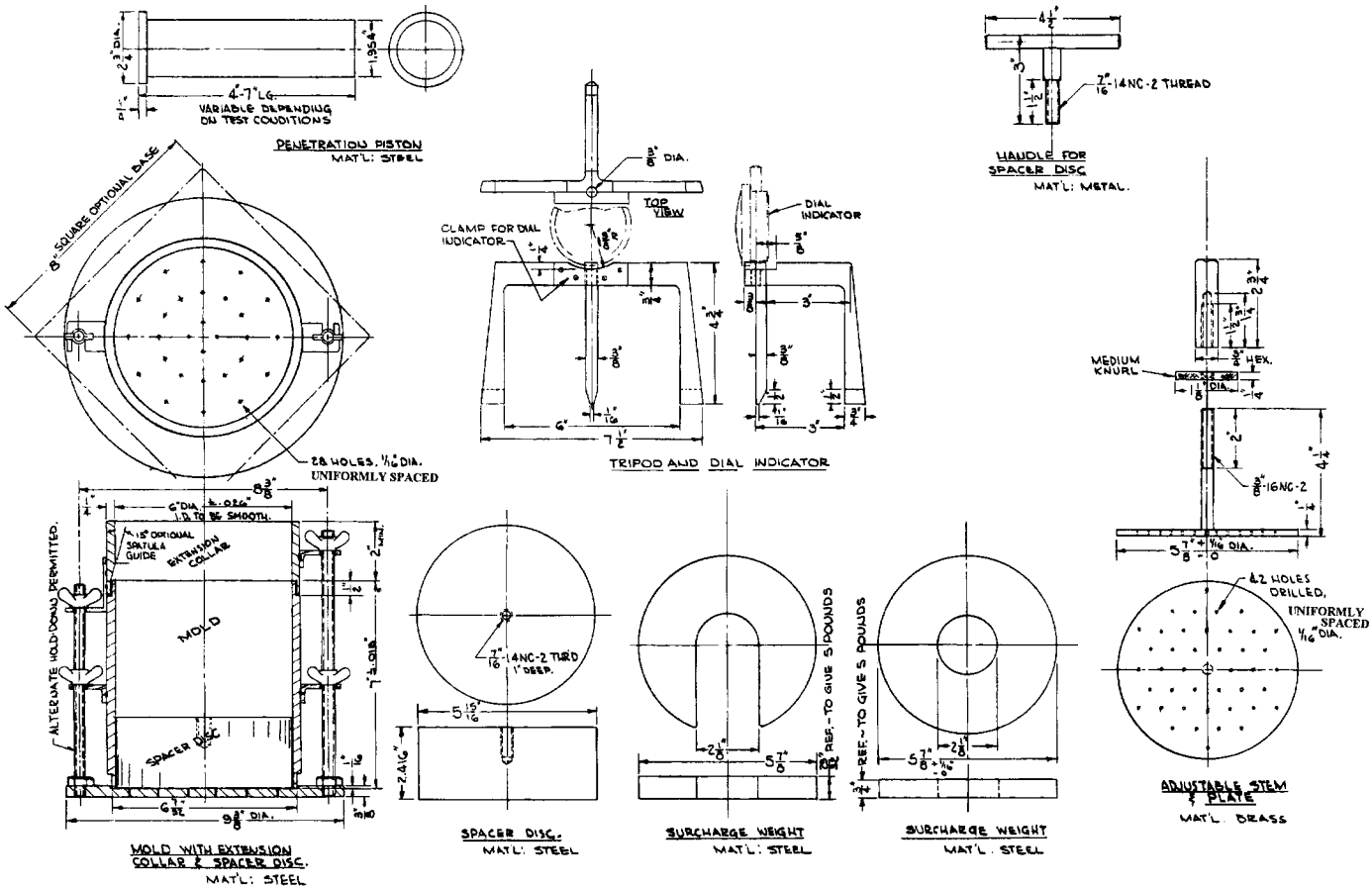

NOTE 1—See Table 2 for metric equivalents.

FIG. 1 Bearing Ratio Test Apparatus

100 % maximum dry unit weight, it will be necessary to include a compactive effort greater than 56-blows per layer (Note 3).

NOTE 4—A semilog log plot of dry unit weight versus compactive effort usually gives a straight line relationship when compactive effort in ft-lb/ft^3 is plotted on the log scale. This type of plot is useful in establishing the compactive effort and number of blows per layer needed to bracket the specified dry unit weight and water content range.

8.2.1 If the CBR test specimen is to be soaked, take a representative sample of the material for the determination of water content in accordance with Test Method D2216. If the compaction process is conducted under reasonable controlled temperatures (65 to 75 F (18 to 24 C) and the processed soil is kept sealed during the compaction process, only one representative water content sample is required. However if the compaction process is being conducted in an uncontrolled environment take two water content samples one at the beginning of compaction and another sample of the remaining material after compaction. Use Test Method D2216 to determine the water contents and average the two values for reporting. The two samples should not differ more than 1.5 percentage points to assume reasonable uniformity of the compacted specimen's water content.

8.2.2 If the sample is not to be soaked, take a water content sample in accordance with Test Methods D698 or D1557 if the average water content is desired.

8.2.3 Clamp the mold (with extension collar attached) to the base plate with the hole for the extraction handle facing down. Insert the spacer disk over the base plate and place a disk of filter paper on top of the spacer disk. Compact the soil-water mixture into the mold in accordance with 8.1, 8.1.1, or 8.1.2.

8.2.4 Remove the extension collar and carefully trim the compacted soil even with the top of the mold by means of a straightedge. Patch with smaller size material any holes that may have developed in the surface by the removal of coarse material. Remove the perforated base plate and spacer disk, weigh, and record the mass of the mold plus compacted soil. Place a disk of coarse filter paper on the perforated base plate, invert the mold and compacted soil, and clamp the perforated base plate to the mold with compacted soil in contact with the filter paper.

8.2.5 Place the surcharge weights on the perforated plate and adjustable stem assembly and carefully lower onto the compacted soil specimen in the mold. Apply a surcharge equal to the weight of the base material and pavement within 5 lbf (2.27 kg), but in no case shall the total weight used be less than 10 lbf (4.54 kg). If no pavement weight is specified, use 10 lbf (4.54 kg) The mass of the Expansion Measuring Apparatus is ignored unless its mass is more than 2.8 lbf (1.27 kg). Immerse the mold and weights in water allowing free access of water to the top and bottom of the specimen. Take initial measurements for swell and allow the specimen to soak for 96 h. Maintain a

Copyright by ASTM Int'l (all rights reserved); Mon Nov 24 13:18:56 EST 2014
Downloaded/printed by
Paul Jobmann (none) pursuant to License Agreement. No further reproductions authorized.

constant water level during this period. A shorter immersion period is permissible for fine grained soils or granular soils that take up moisture readily, if tests show that the shorter period does not affect the results. At the end of 96 h, take final swell measurements and calculate the swell as a percentage of the initial height of the specimen.

8.2.6 Remove the free water and allow the specimen to drain downward for 15 min. Take care not to disturb the surface of the specimen during the removal of the water. It may be necessary to tilt the specimen in order to remove the surface water. Remove the weights, perforated plate, and filter paper, and determine and record the mass. The user may find it convenient to set the mold's base on the rim of a shallow pan to provide the tilt and carefully using a bulb syringe and adsorbent towels to remove free water.

9. Procedure for Bearing Test

9.1 Place a surcharge of weights on the specimen sufficient to produce an intensity of the loading specified; if no pavement weight is specified, use 10-lbf (4.54 kg) mass. If the specimen has been soaked previously, the surcharge shall be equal to that used during the soaking period. To prevent upheaval of soil into the hole of the surcharge weights, place the 5-lbf (2.27-kg) annular weight on the soil surface prior to seating the penetration piston, after which place the remainder of the surcharge weights.

9.2 Seat the penetration piston with the smallest possible load, but in no case in excess of 10 lbf (44 N). Either set both the load and penetration gauges to zero or make provisions to substract any initial values from all subsequently collected data. This initial load is required to ensure satisfactory seating of the piston and shall be considered as the zero load when determining the load penetration relation. Attach the penetrating measuring device in accordance with 6.1.2.

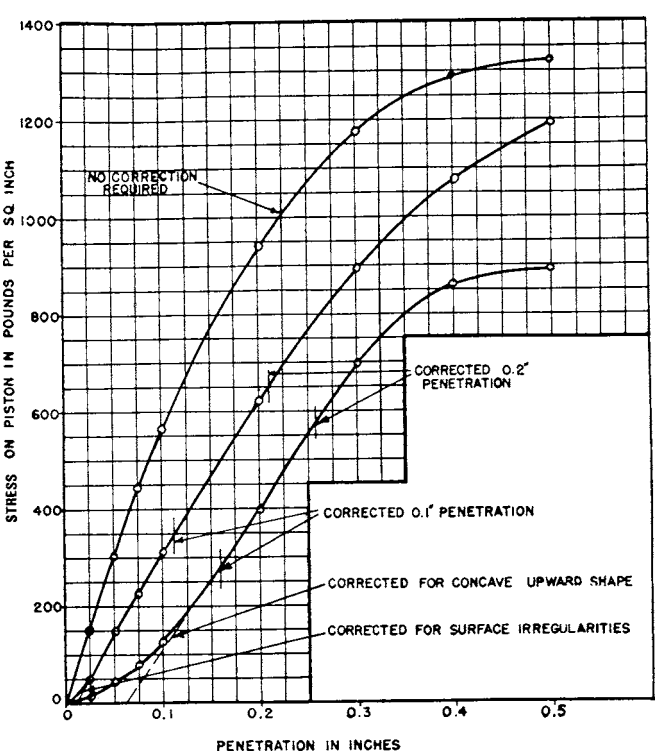

NOTE 1—See Table 2 for metric equivalents.

FIG. 2 Correction of Load-Penetration Curves

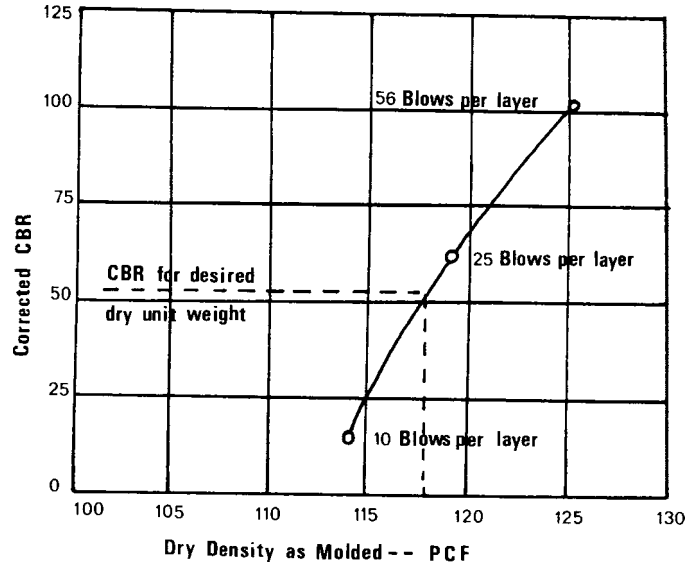

FIG. 3 Dry Density Versus CBR

NOTE 5—At high loads the supports may torque and affect the reading of the penetration gauge. Checking the depth of piston penetration is one means of checking for erroneous strain indications.

9.3 Apply the load on the penetration piston so that the rate of penetration is approximately 0.05 in. (1.27 mm)/min. Record the load readings at penetrations of 0.025 in. (0.64 mm), 0.050 in. (1.27 mm), 0.075 in. (1.91 mm), 0.100 in. (2.54 mm), 0.125 in. (3.18 mm), 0.150 in. (3.81 mm), 0.175 in. (4.45 mm), 0.200 in. (5.08 mm), 0.300 in. (7.62 mm), 0.400 in. (10.16 mm) and 0.500 in. (12.70 mm). Note the maximum load and penetration if it occurs for a penetration of less than 0.500 in. (12.70 mm). With manually operated loading devices, it may be necessary to take load readings at closer intervals to control the rate of penetration. Measure the depth of piston penetration into the soil by putting a ruler into the indentation and measuring the difference from the top of the soil to the bottom of the indentation. If the depth does not closely match the depth of penetration gauge, determine the cause and test a new sample.

9.4 If the test specimen was previously soaked, remove the soil from the mold and determine the water content of the top 1-in. (25.4-mm) layer. Take the water content sample in accordance with Test Methods D698 or D1557. Each water content sample shall weigh not less than 100 g for fine-grained soils nor less than 500 g for granular soils.

NOTE 6—The load readings at penetrations of over 0.300 in. (7.6 mm) may be omitted if the testing machine's capacity has been reached.

10. Calculation

10.1 *Load-Penetration Curve*—Calculate the penetration stress in pounds per square inch or megapascals and plot the stress penetration curve. In some instances, the stresspenetration curve may be concave upward initially, because of surface

Copyright by ASTM Int'l (all rights reserved); Mon Nov 24 13:18:56 EST 2014
Downloaded/printed by
Paul Jobmann (none) pursuant to License Agreement. No further reproductions authorized.

irregularities or other causes, and in such cases the zero point shall be adjusted as shown in Fig. 2.

NOTE 7—Fig. 2 should be used as an example of correction of load-penetration curves only. It is not meant to imply that the 0.2-in. penetration is always more than the 0.1-in. penetration.

10.2 *Bearing Ratio*—Using corrected stress values taken from the stress penetration curve for 0.100 in. (2.54 mm) and 0.200 in. (5.08 mm) penetrations, calculate the bearing ratios for each by dividing the corrected stresses by the standard stresses of 1000 psi (6.9 MPa) and 1500 psi (10.3 MPa) respectively, and multiplying by 100. Also, calculate the bearing ratios for the maximum stress, if the penetration is less than 0.200 in. (5.08 mm) by interpolating the standard stress. The bearing ratio reported for the soil is normally the one at 0.100 in. (2.54 mm) penetration. When the ratio at 0.200 in. (5.08 mm) penetration is greater, rerun the test. If the check test gives a similar result, use the bearing ratio at 0.200 in. (5.08 mm) penetration.

NOTE 8—On occasion the testing agency may be requested to determine the CBR value for a dry density not represented by the laboratory compaction curve. For example, the corrected CBR value for the dry density at 95 % of maximum dry density and at optimum water content might be requested. A recommended method to achieve this value is to compact two or three CBR test specimens at the same molded water content but compact each specimen to different compaction energies to achieve a density below and above the desired value. The corrected CBR values are plotted against the dry density and the desired CBR value interpreted as illustrated in Fig. 3. For consistency the corrected CBR values should be of identical origin, for example, all either soaked or un-soaked and all either at 0.1 or 0.2 corrected penetration values.

10.3 Calculate the dry density, ρ_d, of the compacted specimen (before soaking) as follows:

$$\rho_d = \frac{M_{sas}}{V_m}$$

where:

$$M_{sac} = \frac{M_{m+ws} - M_m}{(1 + w_{ac})}$$

M_{sac} = dry mass of soil as compacted, Mg or g,
M_{m+ws} = wet mass of soil as molded plus mold mass, Mg or g
M_m = mold mass, Mg or g,
w_{ac} = water content determination of representative scraps taken during the compaction process, and
V_m = volume of mold (area of mold × initial height), a calibrate value, m^3 or cm^3.

10.3.1 Conversion of dry density units:

$$\gamma_d = 9.8066 \times \rho_d,\ kN/m^3$$

or,

$$\gamma_d = 62.428 \times \rho_d,\ lbf/ft^3$$

where:

γ_d = dry unit weight, kN/m^3 or lbf/ft^3,
9.8066 = conversion factor, Mg/m^3 or g/cm^3 to kN/m^3, and
62.428 = conversion factor, Mg/m^3 or g/cm^3 to lbf/ft^3.

10.4 If the test specimen was soaked, calculate the percent swell as follows:

$$s = \left(\frac{S}{h_i}\right) \times 100$$

where:

s = swell that occurred during soaking, %,
S = vertical swell determined from the final minus initial swell measurement, in. (mm)
h_i = height of test specimen before swell, in. (mm).

11. Report

11.1 The report shall include, as a minimum, the following:

11.1.1 Method used for preparation and compaction of specimen: Test Methods D698 or D1557, or other, with description.

11.1.2 Condition of sample (unsoaked or soaked).

11.1.3 Dry density (unit weight) of sample as compacted (before soaking).

11.1.4 Water content of sample in percent:

11.1.4.1 As compacted.

11.1.4.2 Top 1-in (25.4-mm) layer after soaking.

11.1.5 Swell (percentage of initial height).

11.1.6 Bearing ratio of sample (unsoaked or soaked), percent.

11.1.7 Surcharge amount.

11.1.8 Any special sample preparation and testing procedures (for example, for self cementing materials).

11.1.9 Sample identification (location, boring number, etc.).

11.1.10 Any pertinent testing done to identify the sample such as: soil classifications per Test Method D2487, visual classification per Practice D2488, Atterberg Limits per Test Method D4318, gradation per Method D422, etc.

11.1.11 The percent material retained on the 19-mm sieve for those cases where scalping and replacement is used.

12. Precision and Bias

12.1 *Precision*—Test data on precision is not presented due to the nature of the materials tested by this test method. It is either not feasible or too costly at this time to have ten or more laboratories participate in a round-robin testing program. Notwithstanding this statement the following is offer for guidance:

12.1.1 One user, based on seven repetitions, has developed a IS % of 9.2 % (compacted per Test Method D698) and 6.9 % (compacted per Test Method D1557). See Appendix X1 for the data used.

12.1.2 Subcommittee D18.05 is seeking any data from the users of this test method that might be used to make a more thorough statement on precision.

12.2 *Bias*—There is no accepted reference value for this test method, therefore, bias cannot be determined.

13. Keywords

13.1 This standard is indexed under the following terms:

California Bearing Ratio	Used For, Narrower Term
Pavement Subgrade	Used For, Narrower Term
Subgrade	Related Term, Broader Term
Pavement Subbase	Used For, Narrower Term
Subbase	Used For, Broader Term
Pavement Base Course	Used For, Narrower Term

Copyright by ASTM Int'l (all rights reserved); Mon Nov 24 13:18:56 EST 2014
Downloaded/printed by
Paul Jobmann (none) pursuant to License Agreement. No further reproductions authorized.

Base Course	Used For, Broader Term	Earthfill	Related To
Strength of Soil	Used For	Cohesive Soils	Used For
Pavement Design	Used For, Narrower Term	Compressive Strength	Used For
Acceptance Tests	Used For	Flexible Pavements	Used For
Bearing Capacity	Used For	FoundationInvestigations	Used For
Materials Evaluations	Used For	Soil Tests	Used For
Bearing Ratio	Used For, Broader Term		
Load Penetration Curve	Used For		
Design	Used For, Broader Term		

APPENDIX

(Nonmandatory Information)

X1.

X1.1 See Fig. X1.1 for more information.

STANDARD (D698)

CBR

(x)	(x-x)	$(x-x)^2$
16.7	.5	.25
15.7	1.5	2.25
18.2	1.0	1
18.2	1.0	1
18.8	1.6	2.56
19.3	2.1	4.41
17.9	0.7	.49

$\underline{x}$ =124.8 $(x-x)^2$ 11.96

$\underline{x}$ = 17.2

MODIFIED (D1557)

CBR

(x)	(x-x)	$(x-x)^2$
77.0	3	9
70.2	3.8	14.44
80.8	6.8	46.24
68.2	5.8	33.64
76.7	2.7	7.29
71.7	2.3	5.29
73.3	0.7	.49

$\underline{x}$ =517.9 $(x-x)^2$ 116.39

x = 74.0

$$S = \frac{11.96}{6}$$

IS (one sigma) = 1.41

$$IS\ \% = \frac{1.41 \times 100}{17.2} = 8.2\%$$

D2S % = 22.6%

$$S = \frac{116.39}{6} = 19.39$$

IS = 4.4

$$IS\ \% = \frac{4.4 \times 100}{74} = 5.9\%$$

D2S % = 16.7%

NOTES:
- All Material passed the #10 sieve
- Over 90% of all material passed the #40 sieve
- Method A of AASHTO T99 & T180 used
- Unit weights were 110 PCF ± (D698) and 122 PCF ± (D1557)
- 7 test repetitions
- The above data is from one user
- The (IS) and (D2S) limits represent the limits as described in ASTM Practice C670.

FIG. X1.1 Compactive Effort

Copyright by ASTM Int'l (all rights reserved); Mon Nov 24 13:18:56 EST 2014
Downloaded/printed by
Paul Jobmann (none) pursuant to License Agreement. No further reproductions authorized.

SUMMARY OF CHANGES

Committee D18 has identified the location of selected changes to this standard since the last issue (D1883 – 05) that may impact the use of this standard. (Approved November 15, 2007.)

(1) Revised Section 1 to include requirements of significant digits.
(2) Revised Section 1.1 to include Practice D6026.
(3) Added new Section 3, Terminology.
(4) Added note referencing Practice D3740 to Significance and Use section.
(5) Added details to Apparatus section
(6) Eliminated Note 8 that provided guidance for determining CBRs for penetrations other than 0.1 and 0.2 in.
(7) Eliminated old 9.4 and Figure 4 as these items pertain to engineering design.
(8) Added formulas to Calculation section.
(9) Modified the report section to include only essential information.
(10) Modified Precision and Bias section to conform to D18 Standards Preparation Manual.

ASTM International takes no position respecting the validity of any patent rights asserted in connection with any item mentioned in this standard. Users of this standard are expressly advised that determination of the validity of any such patent rights, and the risk of infringement of such rights, are entirely their own responsibility.

This standard is subject to revision at any time by the responsible technical committee and must be reviewed every five years and if not revised, either reapproved or withdrawn. Your comments are invited either for revision of this standard or for additional standards and should be addressed to ASTM International Headquarters. Your comments will receive careful consideration at a meeting of the responsible technical committee, which you may attend. If you feel that your comments have not received a fair hearing you should make your views known to the ASTM Committee on Standards, at the address shown below.

This standard is copyrighted by ASTM International, 100 Barr Harbor Drive, PO Box C700, West Conshohocken, PA 19428-2959, United States. Individual reprints (single or multiple copies) of this standard may be obtained by contacting ASTM at the above address or at 610-832-9585 (phone), 610-832-9555 (fax), or service@astm.org (e-mail); or through the ASTM website (www.astm.org). Permission rights to photocopy the standard may also be secured from the ASTM website (www.astm.org/COPYRIGHT/).

Copyright by ASTM Int'l (all rights reserved); Mon Nov 24 13:18:56 EST 2014
Downloaded/printed by
Paul Jobmann (none) pursuant to License Agreement. No further reproductions authorized.

Designation: D2216 – 10

Standard Test Methods for Laboratory Determination of Water (Moisture) Content of Soil and Rock by Mass[1]

This standard is issued under the fixed designation D2216; the number immediately following the designation indicates the year of original adoption or, in the case of revision, the year of last revision. A number in parentheses indicates the year of last reapproval. A superscript epsilon (ε) indicates an editorial change since the last revision or reapproval.

This standard has been approved for use by agencies of the Department of Defense.

1. Scope*

1.1 These test methods cover the laboratory determination of the water (moisture) content by mass of soil, rock, and similar materials where the reduction in mass by drying is due to loss of water except as noted in 1.4, 1.5, and 1.7. For simplicity, the word "material" shall refer to soil, rock or aggregate whichever is most applicable.

1.2 Some disciplines, such as soil science, need to determine water content on the basis of volume. Such determinations are beyond the scope of this test method.

1.3 The water content of a material is defined in 3.2.1.

1.4 The term "solid material" as used in geotechnical engineering is typically assumed to mean naturally occurring mineral particles of soil and rock that are not readily soluble in water. Therefore, the water content of materials containing extraneous matter (such as cement etc.) may require special treatment or a qualified definition of water content. In addition, some organic materials may be decomposed by oven drying at the standard drying temperature for this method (110°C). Materials containing gypsum (calcium sulfate dihydrate) or other compounds having significant amounts of hydrated water may present a special problem as this material slowly dehydrates at the standard drying temperature (110°C) and at very low relative humidity, forming a compound (such as calcium sulfate hemihydrate) that is not normally present in natural materials except in some desert soils. In order to reduce the degree of dehydration of gypsum in those materials containing gypsum or to reduce decomposition in highly/fibrous organic soils, it may be desirable to dry the materials at 60°C or in a desiccator at room temperature. Thus, when a drying temperature is used which is different from the standard drying temperature as defined by this test method, the resulting water content may be different from the standard water content determined at the standard drying temperature of 110°C.

NOTE 1—Test Method D2974 provides an alternate procedure for determining water content of peat materials.

1.5 Materials containing water with substantial amounts of soluble solids (such as salt in the case of marine sediments) when tested by this method will give a mass of solids that includes the previously soluble dissolved solids. These materials require special treatment to remove or account for the presence of precipitated solids in the dry mass of the specimen, or a qualified definition of water content must be used. For example, see Test Method D4542 regarding information on marine sediments.

1.6 This test standard requires several hours for proper drying of the water content specimen. Test Methods D4643, D4944 and D4959 provide less time-consuming processes for determining water content. See Gilbert[2] for details on the background of Test Method D4643.

1.7 Two test methods are provided in this standard. The methods differ in the significant digits reported and the size of the specimen (mass) required. The method to be used may be specified by the requesting authority; otherwise Method A shall be performed.

1.7.1 *Method A*—The water content by mass is recorded to the nearest 1 %. For cases of dispute, Method A is the referee method.

1.7.2 *Method B*—The water content by mass is recorded to the nearest 0.1 %.

1.8 This standard requires the drying of material in an oven. If the material being dried is contaminated with certain chemicals, health and safety hazards can exist. Therefore, this standard should not be used in determining the water content of contaminated soils unless adequate health and safety precautions are taken.

1.9 *Units*—The values stated in SI units shall be regarded as standard excluding the Alternative Sieve Sizes listed in Table 1. No other units of measurement are included in this test method.

[1] This test method is under the jurisdiction of ASTM Committee D18 on Soil and Rock and is the direct responsibility of Subcommittee D18.03 on Texture, Plasticity and Density Characteristics of Soils.

Current edition approved July 1, 2010. Published August 2010. Originally approved in 1963. Last previous edition approved in 2005 as D2216–05. DOI: 10.1520/D2216-10.

[2] Gilbert, P.A., "Computer Controlled Microwave Oven System for Rapid Water Content Determination," Tech. Report GL-88–21, Department of the Army, Waterways Experiment Station, Corps of Engineers, Vicksburg, MS, November 1988 .

***A Summary of Changes section appears at the end of this standard**

Copyright © ASTM International, 100 Barr Harbor Drive, PO Box C700, West Conshohocken, PA 19428-2959. United States

Copyright by ASTM Int'l (all rights reserved); Fri Nov 21 11:39:36 EST 2014
Downloaded/printed by
Paul Jobmann (none) pursuant to License Agreement. No further reproductions authorized.

TABLE 1 Minimum Requirements for Mass of Test Specimen, and Balance Readability[A]

Maximum Particle Size (100 % Passing)		Method A Water Content Recorded to ±1 %		Method B Water Content Recorded to ±0.1 %	
SI Unit Sieve Size	Alternative Sieve Size	Specimen Mass	Balance Readability (g)	Specimen Mass (g)	Balance Readability (g)
75.0 mm	3 in	5 kg	10	50 kg	10
37.5 mm	1-½ in.	1 kg	10	10 kg	10
19.0 mm	¾ in.	250 g	1	2.5 kg	1
9.5 mm	⅜ in.	50 g	0.1	500 g	0.1
4.75 mm	No. 4	20 g	0.1	100 g	0.1
2.00 mm	No. 10	20 g	0.1	20 g	0.01

[A]If water content data is to be used to calculate other relationships, such as moist or dry mass, wet or dry unit weight or total or dry density, then specimen mass up to 200 g must be determined using a balance accurate to 0.01 g.

1.10 Refer to Practice D6026 for guidance concerning the use of significant figures that shall determine whether Method, A or B is required. This is especially important if the water content will be used to calculate other relationships such as moist mass to dry mass or vice versa, wet unit weight to dry unit weight or vice versa, and total density to dry density or vice versa. For example, if four significant digits are required in any of the above calculations, then the water content must be recorded to the nearest 0.1 %. This occurs since 1 plus the water content (not in percent) will have four significant digits regardless of what the value of the water content is; that is, 1 plus 0.1/100 = 1.001, a value with four significant digits. While, if three significant digits are acceptable, then the water content can be recorded to the nearest 1 %.

1.11 *This standard does not purport to address all of the safety concerns, if any, associated with its use. It is the responsibility of the user of this standard to establish appropriate safety and health practices and determine the applicability of regulatory limitations prior to use.*

2. Referenced Documents

2.1 *ASTM Standards:*[3]

D653 Terminology Relating to Soil, Rock, and Contained Fluids

D2974 Test Methods for Moisture, Ash, and Organic Matter of Peat and Other Organic Soils

D3740 Practice for Minimum Requirements for Agencies Engaged in Testing and/or Inspection of Soil and Rock as Used in Engineering Design and Construction

D4220 Practices for Preserving and Transporting Soil Samples

D4318 Test Methods for Liquid Limit, Plastic Limit, and Plasticity Index of Soils

D4542 Test Method for Pore Water Extraction and Determination of the Soluble Salt Content of Soils by Refractometer

D4643 Test Method for Determination of Water (Moisture) Content of Soil by Microwave Oven Heating

D4753 Guide for Evaluating, Selecting, and Specifying Balances and Standard Masses for Use in Soil, Rock, and Construction Materials Testing

D4944 Test Method for Field Determination of Water (Moisture) Content of Soil by the Calcium Carbide Gas Pressure Tester

D4959 Test Method for Determination of Water (Moisture) Content of Soil By Direct Heating

D5079 Practices for Preserving and Transporting Rock Core Samples

D6026 Practice for Using Significant Digits in Geotechnical Data

D7263 Test Methods for Laboratory Determination of Density (Unit Weight) of Soil Specimens

E145 Specification for Gravity-Convection and Forced-Ventilation Ovens

3. Terminology

3.1 Refer to Terminology D653 for standard definitions of terms.

3.2 *Definitions:*

3.2.1 *water content by mass (of a material)*—the ratio of the mass of water contained in the pore spaces of soil or rock material, to the solid mass of particles in that material, expressed as a percentage. A standard temperature of 110 ± 5°C is used to determine these masses.

3.3 *Definitions of Terms Specific to This Standard:*

3.3.1 *constant dry mass (of a material)*—the state that a water content specimen has attained when further heating causes, or would cause, less than 1 % or 0.1 % additional loss in mass for Method A or B respectively. The time required to obtain constant dry mass will vary depending on numerous factors. The influence of these factors generally can be established by good judgement, and experience with the materials being tested and the apparatus being used.

4. Summary of Test Method

4.1 A test specimen is dried in an oven at a temperature of 110 ± 5°C to a constant mass. The loss of mass due to drying is considered to be water. The water content is calculated using the mass of water and the mass of the dry specimen.

5. Significance and Use

5.1 For many materials, the water content is one of the most significant index properties used in establishing a correlation between soil behavior and its index properties.

[3] For referenced ASTM standards, visit the ASTM website, www.astm.org, or contact ASTM Customer Service at service@astm.org. For *Annual Book of ASTM Standards* volume information, refer to the standard's Document Summary page on the ASTM website.

Copyright by ASTM Int'l (all rights reserved); Fri Nov 21 11:39:36 EST 2014
Downloaded/printed by
Paul Jobmann (none) pursuant to License Agreement. No further reproductions authorized.

5.2 The water content of a material is used in expressing the phase relationships of air, water, and solids in a given volume of material.

5.3 In fine-grained (cohesive) soils, the consistency of a given soil type depends on its water content. The water content of a soil, along with its liquid and plastic limits as determined by Test Method D4318, is used to express its relative consistency or liquidity index.

NOTE 2—The quality of the result produced by this standard is dependent on the competence of the personnel performing it, and the suitability of the equipment and facilities used. Agencies that meet the criteria of Practice D3740 are generally considered capable of competent and objective testing/sampling/inspection/etc. Users of this standard are cautioned that compliance with Practice D3740 does not in itself ensure reliable results. Reliable results depend on many factors; Practice D3740 provides a means of evaluating some of those factors.

6. Apparatus

6.1 *Drying Oven*—Vented, thermostatically-controlled, preferably of the forced-draft type, meeting the requirements of Specification E145 and capable of maintaining a uniform temperature of 110 ± 5°C throughout the drying chamber.

6.2 *Balances*—All balances must meet the requirements of Specification D4753 and this section. A Class GP1 balance of 0.01 g readability is required for specimens having a mass of up to 200 g (excluding mass of specimen container) and a Class GP2 balance of 0.1 g readability is required for specimens having a mass over 200 g. However, the balance used may be controlled by the number of significant digits needed (see 1.10).

6.3 *Specimen Containers*—Suitable containers made of material resistant to corrosion and change in mass upon repeated heating, cooling, exposure to materials of varying pH, and cleaning. Unless a dessicator is used, containers with close-fitting lids shall be used for testing specimens having a mass of less than about 200 g; while for specimens having a mass greater than about 200 g, containers without lids may be used (see Note 3). One uniquely numbered (identified) container or number-matched container and lid combination as required is needed for each water content determination.

NOTE 3—The purpose of close-fitting lids is to prevent loss of moisture from specimens before initial mass determination, and to prevent absorption of moisture from the atmosphere following drying and before final mass determination.

6.4 *Desiccator (Optional)*—A desiccator cabinet or large desiccator jar of suitable size containing silica gel or anhydrous calcium sulfate. It is preferable to use a desiccant that changes color when it needs to be reconstituted.

NOTE 4—Anhydrous calcium sulfate is sold under the trade name Drierite.

6.5 *Container Handling Apparatus,* heat resistant gloves, tongs, or suitable holder for moving and handling hot containers after drying.

6.6 *Miscellaneous,* knives, spatulas, scoops, quartering cloth, wire saws, etc., as required.

7. Samples

7.1 Soil samples shall be preserved and transported in accordance with Practice D4220 Section 8 Groups B, C, or D soils. Rock samples shall be preserved and transported in accordance with Practice D5079 section 7.5.2, Special Care Rock. Keep the samples that are stored prior to testing in non-corrodible airtight containers at a temperature between approximately 3 and 30°C and in an area that prevents direct contact with sunlight. Disturbed samples in jars or other containers shall be stored in such a way as to minimize moisture condensation on the insides of the containers.

7.2 The water content determination should be done as soon as practicable after sampling, especially if potentially corrodible containers (such as thin-walled steel tubes, paint cans, etc.) or plastic sample bags are used.

8. Test Specimen

8.1 For water contents being determined in conjunction with another ASTM method, the specimen mass requirement stated in that method shall be used if one is provided. If no minimum specimen mass is provided in that method then the values given below shall apply. See Howard[4] for background data for the values listed.

8.2 The minimum specimen mass of moist material selected to be representative of the total sample is based on visual maximum particle size in the sample and the Method (Method A or B) used to record the data. Minimum specimen mass and balance readability shall be in accordance with Table 1.

8.3 Using a test specimen smaller than the minimum indicated in 8.2 requires discretion, though it may be adequate for the purposes of the test. Any specimen used not meeting these requirements shall be noted on the test data forms or test data sheets.

8.4 When working with a small (less than 200 g) specimen containing a relatively large gravel particle, it is appropriate not to include this particle in the test specimen. However, any discarded material shall be described and noted on the test data form/sheet.

8.5 For those samples consisting entirely of intact rock or gravel-size aggregate, the minimum specimen mass shall be 500 g. Representative portions of the sample may be broken into smaller particles. The particle size is dictated by the specimen mass, the container volume and the balance being used to determine constant mass, see 10.4. Specimen masses as small as 200 g may be tested if water contents of only two significant digits are acceptable.

9. Test Specimen Selection

9.1 When the test specimen is a portion of a larger amount of material, the specimen must be selected to be representative of the water condition of the entire amount of material. The manner in which the test specimen is selected depends on the purpose and application of the test, type of material being tested, the water condition, and the type of sample (from another test, bag, block, etc.).

[4] Howard, A. K., "Minimum Test Specimen Mass for Moisture Content Determination," *Geotechnical Testing Journal,* ASTM., Vol. 12, No. 1, March 1989, pp. 39-44.

Copyright by ASTM Int'l (all rights reserved); Fri Nov 21 11:39:36 EST 2014
Downloaded/printed by
Paul Jobmann (none) pursuant to License Agreement. No further reproductions authorized.

9.2 For disturbed samples such as trimmings, bag samples, etc; obtain the test specimen by one of the following methods (listed in order of preference):

9.2.1 If the material is such that it can be manipulated and handled without significant moisture loss and segregation, the material should be mixed thoroughly. Select a representative portion using a scoop of a size that no more than a few scoopfuls are required to obtain the proper size of specimen defined in 8.2. Combine all the portions for the test specimen.

9.2.2 If the material is such that it cannot be thoroughly mixed or mixed and sampled by a scoop, form a stockpile of the material, mixing as much as possible. Take at least five portions of material at random locations using a sampling tube, shovel, scoop, trowel, or similar device appropriate to the maximum particle size present in the material. Combine all the portions for the test specimen.

9.2.3 If the material or conditions are such that a stockpile cannot be formed, take as many portions of the material as practical, using random locations that will best represent the moisture condition. Combine all the portions for the test specimen.

9.3 Intact samples such as block, tube, split barrel, etc, obtain the test specimen by one of the following methods depending on the purpose and potential use of the sample:

9.3.1 Using a knife, wire saw, or other sharp cutting device, trim the outside portion of the sample a sufficient distance to see if the material is layered, and to remove material that appears more dry or more wet than the main portion of the sample. If the existence of layering is questionable, slice the sample in half. If the material is layered, see 9.3.3.

9.3.2 If the material is not layered, obtain the specimen meeting the mass requirements in 8.2 by: *(1)* taking all or one-half of the interval being tested; *(2)* trimming a representative slice from the interval being tested; or *(3)* trimming the exposed surface of one-half or from the interval being tested.

NOTE 5—Migration of moisture in some cohesionless soils may require that the entire sample be tested.

9.3.3 If a layered material (or more than one material type is encountered), select an average specimen, or individual specimens, or both. Specimens must be properly identified as to location, or what they represent, and appropriate remarks entered on the test data forms or test data sheets.

10. Procedure

10.1 Determine and record the mass of the clean and dry specimen container and its lid, if used along with its identification number.

10.2 Select representative test specimens in accordance with Section 9.

10.3 Place the moist test specimen in the container and, if used, set the lid securely in position. Determine the mass of the container and moist specimen using a balance (see 8.2 and Table 1) selected on the basis of the specimen mass or required significant digits. Record this value.

NOTE 6—To assist in the oven drying of large test specimens, they should be placed in containers having a large surface area (such as pans) and the material broken up into smaller aggregations.

10.4 Remove the lid (if used) and place the container with the moist specimen in the drying oven. Dry the specimen to a constant mass. Maintain the drying oven at 110 ± 5°C unless otherwise specified (see 1.4). The time required to obtain constant mass will vary depending on the type of material, size of specimen, oven type and capacity, and other factors. The influence of these factors generally can be established by good judgment and experience with the materials being tested and the apparatus being used.

10.4.1 In most cases, drying a test specimen overnight (about 12 to 16 h) is sufficient, especially when using forced draft ovens. In cases where there is doubt concerning the adequacy of drying to a constant dry mass, see 3.3.1 and check for additional loss in mass with additional oven drying over an adequate time period. A minimum time period of two hours should be used, increasing the drying time with increasing specimen mass. A rapid check to see if a relatively large specimen (> than about 100 g of material) is dry; place a small strip of torn paper on top of the material while it is in the oven or just upon removal from the oven. If the paper strip curls the material is **not** dry and requires additional drying time. Specimens of sand may often be dried to constant mass in a period of about 4 h, when a forced-draft oven is used.

10.4.2 Since some dry materials may absorb moisture from drying specimens that still retain moisture, dried specimens shall be removed before placing moist specimens in the same oven; unless they are being dried overnight.

10.5 After the specimen has dried to constant mass, remove the container from the oven (and replace the lid if used). Allow the specimen and container to cool to room temperature or until the container can be handled comfortably with bare hands and the operation of the balance will not be affected by convection currents or heat transmission or both. Determine the mass of the container and oven-dried specimen using the same type/capacity balance used in 10.3. Record this value. Tight fitting lids shall be used if it appears that the specimen is absorbing moisture from the air prior to determination of its dry mass.

10.5.1 Cooling in a desiccator is acceptable in place of tight fitting lids since it greatly reduces absorption of moisture from the atmosphere during cooling.

10.6 A copy of a sample data sheet is shown in Appendix X1. Any data sheet can be used, provided the form contains all the required data.

11. Calculation

11.1 Calculate the water content of the material as follows:

$$w = \left[(M_{cms} - M_{cds})/(M_{cds} - M_c)\right] \times 100 = (M_w/M_s) \times 100 \quad (1)$$

where:

w = water content, %,
M_{cms} = mass of container and moist specimen, g,
M_{cds} = mass of container and oven dry specimen, g,
M_c = mass of container, g,
M_w = mass of water ($M_w = M_{cms} - M_{cds}$), g, and
M_s = mass of oven dry specimen ($M_s = M_{cds} - M_c$), g.

12. Report: Test Data Form/Sheet

12.1 The method used to specify how data are recorded on the test data sheets or forms, as given below, is the industry

Copyright by ASTM Int'l (all rights reserved); Fri Nov 21 11:39:36 EST 2014
Downloaded/printed by
Paul Jobmann (none) pursuant to License Agreement. No further reproductions authorized.

standard, and are representative of the significant digits that should be retained. These requirements do not consider in situ material variation, use of the data, special purpose studies, or any considerations for the user's objectives. It is common practice to increase or reduce significant digits of reported data commensurate with these considerations. It is beyond the scope of the standard to consider significant digits used in analysis method for engineering design.

12.1.1 Test data forms or test data sheets shall include the following:

12.1.2 Identification of the sample (material) being tested, such as boring number, sample number, test number, container number etc.

12.1.3 Water content of the specimen to the nearest 1 % for Method A or 0.1 % for Method B, as appropriate based on the minimum mass of the specimen. If this method is used in concert with another method, the water content of the specimen should be reported to the value required by the test method for which the water content is being determined. Refer to Practice D6026 for guidance concerning significant digits, especially if the value obtained from this test method is to be used to calculate other relationships such as unit weight or density. For instance, if it is desired to express dry unit weight, as determined by D7263 to the nearest 0.1 lbf/f^3 (0.02 kN/m^3), it may be necessary to use a balance with a greater readability or use a larger specimen mass to obtain the required significant digits the mass of water so that the water content can be determined to the required significant digits. Also, the significant digits in Practice D6026 may need to be increased when calculating phase relationships requiring four significant digits.

12.1.4 Indicate if test specimen had a mass less than the minimum indicated in 8.2.

12.1.5 Indicate if test specimen contained more than one material type (layered, etc.).

12.1.6 Indicate the drying temperature if different from 110 ± 5°C.

12.1.7 Indicate if any material (size and amount) was excluded from the test specimen.

12.2 When reporting water content in tables, figures, etc., any data not meeting the requirements of this test method shall be noted, such as not meeting the mass, balance, or temperature requirements or a portion of the material is excluded from the test specimen.

13. Precision and Bias

13.1 *Statements on Precision*[5]:

13.1.1 *Precision*—Test data on precision is not presented due to the nature of the soil or rock materials tested by this test method. It is either not feasible or too costly at this time to have ten or more laboratories participate in a round-robin testing program. Any variation observed in the data is just as likely to be due to specimen variation as to operator or laboratory testing variation.

13.1.2 Subcommittee D18.03 is seeking any data from the users of this test method that might be used to make a limited statement on precision.

13.1.3 *Bias*—There is no accepted reference value for this test method, therefore, bias cannot be determined.

14. Keywords

14.1 aggregate; consistency; index property; laboratory; moisture analysis; moisture content; soil; water content

[5] Supporting data have been filed at ASTM International Headquarters and may be obtained by requesting Research Report RR:D13-1108.

Copyright by ASTM Int'l (all rights reserved); Fri Nov 21 11:39:36 EST 2014
Downloaded/printed by
Paul Jobmann (none) pursuant to License Agreement. No further reproductions authorized.

APPENDIX

(Nonmandatory Information)

X1. WATER CONTENT OF SOIL AND ROCK SAMPLE DATA SHEET

Project Name: _____ Project Number: _____

Test Method: __X__ Method A
_____ Method B

Laboratory Number	04-725-S	04-726-S	04-727-S		
Boring Number	B-1	B-2	B-2		
Field Number	SPT-1	SPT-2	SPT-2a		
Container / Lid Number	725	726	727		
Container Mass, g M_c	770.1	731.7	770.6		
Container+Moist Specimen Mass, g M_{cms}	1895.3	2008.4	1827.9		
Date / Time In Oven	8/20/2004 0700	8/20/2004 0700	8/20/2004 0700		
Initial Container+Oven Dry Specimen Mass, g	1721.4	1872.1	1707.6		
Date / Time Out of Oven	8/20/2004 1200	8/20/2004 1200	8/20/2004 1200		
Secondary Container+Oven Dry Specimen Mass, g	1721.4	1801.2	1660.8		
Date / Time Out of Oven	--	8/20/2004 1600	8/20/2004 1600		
Final Container+Oven Dry Specimen Mass, g, M_{cds}	1721.4	1801.2	1660.8		
Date / Time Out of Oven	--	8/21/2004 0700	8/21/2004 0700		
Mass of Water, g, $M_w = M_{cms} - M_{cds}$	173.9	207.2	167.1		
Mass of Solids, g, $M_s = M_{cds} - M_c$	951.3	1069.5	890.2		
Water Content, %, $w = (M_w/M_s) \times 100$	18	19	19		
Unified Soil Classification Group Symbol (Visual)	GC	GC	GC		
Bold Approximate Maximimum Grain Size (Visual)	3 in., 1½ in., **¾ in.**, ⅜ in., #4, #10, < #10	3 in., 1½ in., **¾ in.**, ⅜ in., #4, #10, < #10	3 in., 1½ in., **¾ in.**, ⅜ in., #4, #10, < #10	3 in., 1½ in., ¾ in., ⅜ in., #4, #10, < #10	3 in., 1½ in., ¾ in., ⅜ in., #4, #10, < #10
Oven Temperature if Other Than 110°C	—	—	—		

Remarks: _____

_____

Tested By: _____ Date: _____ Checked By: _____

Dry Mass By: _____ Date: _____ Spot Checked: _____

Calculated By: _____ Date: _____ Reviewed By: _____

Copyright by ASTM Int'l (all rights reserved); Fri Nov 21 11:39:36 EST 2014
Downloaded/printed by
Paul Jobmann (none) pursuant to License Agreement. No further reproductions authorized.

SUMMARY OF CHANGES

Committee D18 has identified the location of selected changes to these test methods since the last issue, D2216–05, that may impact the use of these test methods. (Approved July 1, 2010)

(*1*) Replaced "has to" with "must" in 1.10.
(*2*) Added the "heat resistant" to "gloves" in 6.5.
(*3*) Replaced "reduce" with "minimize" in 7.1.
(*4*) Added "or required significant digits" in 10.3.
(*5*) Revised 10.4.1 to clarify the process of obtaining and checking to determine if a specimen had reached constant mass.
(*6*) Added "that still retain moisture" in 10.4.2.
(*7*) Replaced "its being heated" with "heat transmission" in 10.5.
(*8*) Added "as determined by D7263" in 12.1.3.
(*9*) Added Footnote A to Table 1 reflecting balance requirements outlined in 6.2.

ASTM International takes no position respecting the validity of any patent rights asserted in connection with any item mentioned in this standard. Users of this standard are expressly advised that determination of the validity of any such patent rights, and the risk of infringement of such rights, are entirely their own responsibility.

This standard is subject to revision at any time by the responsible technical committee and must be reviewed every five years and if not revised, either reapproved or withdrawn. Your comments are invited either for revision of this standard or for additional standards and should be addressed to ASTM International Headquarters. Your comments will receive careful consideration at a meeting of the responsible technical committee, which you may attend. If you feel that your comments have not received a fair hearing you should make your views known to the ASTM Committee on Standards, at the address shown below.

This standard is copyrighted by ASTM International, 100 Barr Harbor Drive, PO Box C700, West Conshohocken, PA 19428-2959, United States. Individual reprints (single or multiple copies) of this standard may be obtained by contacting ASTM at the above address or at 610-832-9585 (phone), 610-832-9555 (fax), or service@astm.org (e-mail); or through the ASTM website (www.astm.org). Permission rights to photocopy the standard may also be secured from the ASTM website (www.astm.org/COPYRIGHT/).

Copyright by ASTM Int'l (all rights reserved); Fri Nov 21 11:39:36 EST 2014
Downloaded/printed by
Paul Jobmann (none) pursuant to License Agreement. No further reproductions authorized.

Designation: D6938 – 10

Standard Test Method for In-Place Density and Water Content of Soil and Soil-Aggregate by Nuclear Methods (Shallow Depth)[1]

This standard is issued under the fixed designation D6938; the number immediately following the designation indicates the year of original adoption or, in the case of revision, the year of last revision. A number in parentheses indicates the year of last reapproval. A superscript epsilon (ε) indicates an editorial change since the last revision or reapproval.

1. Scope*

1.1 This test method describes the procedures for measuring in-place density and moisture of soil and soil-aggregate by use of nuclear equipment. The density of the material may be measured by direct transmission, backscatter, or backscatter/air-gap ratio methods. Measurements for water (moisture) content are taken at the surface in backscatter mode regardless of the mode being used for density. It is the intent of this subcommittee that this standard replace D2922 and D3017.

1.1.1 For limitations see Section 5 on Interferences.

1.2 The total or wet density of soil and soil-aggregate is measured by the attenuation of gamma radiation where, in direct transmission, the source is placed at a known depth up to 300 mm (12 in.) and the detector (s) remains on the surface (some gauges may reverse this orientation); or in backscatter or backscatter/air-gap the source and detector(s) both remain on the surface.

1.2.1 The density of the test sample in mass per unit volume is calculated by comparing the detected rate of gamma radiation with previously established calibration data.

1.2.2 The dry density of the test sample is obtained by subtracting the water mass per unit volume from the test sample wet density (Section 11). Most gauges display this value directly.

1.3 The gauge is calibrated to read the water mass per unit volume of soil or soil-aggregate. When divided by the density of water and then multiplied by 100, the water mass per unit volume is equivalent to the volumetric water content. The water mass per unit volume is determined by the thermalizing or slowing of fast neutrons by hydrogen, a component of water. The neutron source and the thermal neutron detector are both located at the surface of the material being tested. The water content most prevalent in engineering and construction activities is known as the gravimetric water content, w, and is the ratio of the mass of the water in pore spaces to the total mass of solids, expressed as a percentage.

1.4 Two alternative procedures are provided.

1.4.1 *Procedure A* describes the direct transmission method in which the gamma source rod extends through the base of the gauge into a pre-formed hole to a desired depth. The direct transmission is the preferred method.

1.4.2 *Procedure B* involves the use of a dedicated backscatter gauge or the source rod in the backscatter position. This places the gamma and neutron sources and the detectors in the same plane.

1.5 *SI Units*—The values stated in SI units are to be regarded as the standard. The values in inch-pound units (ft – lb units) are provided for information only.

1.6 All observed and calculated values shall conform to the guide for significant digits and rounding established in Practice D6026.

1.6.1 The procedures used to specify how data are collected, recorded, and calculated in this standard are regarded as the industry standard. In addition, they are representative of the significant digits that should generally be retained. The procedures used do not consider material variation, purpose for obtaining the data, special purpose studies, or any considerations for the user's objectives; and it is common practice to increase or reduce significant digits of reported data to be commensurate with these considerations. It is beyond the scope of this standard to consider significant digits used in analysis methods for engineering design.

1.7 *This standard does not purport to address all of the safety concerns, if any, associated with its use. It is the responsibility of the user of this standard to establish appropriate safety and health practices and determine the applicability of regulatory limitations prior to use.*

2. Referenced Documents

2.1 *ASTM Standards:*[2]

[1] This test method is under the jurisdiction of ASTM Committee D18 on Soil and Rock and is the direct responsibility of Subcommittee D18.08 on Special and Construction Control Tests.

Current edition approved May 1, 2010. Published June 2010. Originally approved in 2006. Last previous edition approved in 2008 as D6938–08a. DOI: 10.1520/D6938-10.

[2] For referenced ASTM standards, visit the ASTM website, www.astm.org, or contact ASTM Customer Service at service@astm.org. For *Annual Book of ASTM Standards* volume information, refer to the standard's Document Summary page on the ASTM website.

***A Summary of Changes section appears at the end of this standard**

Copyright © ASTM International, 100 Barr Harbor Drive, PO Box C700, West Conshohocken, PA 19428-2959. United States

Copyright by ASTM Int'l (all rights reserved); Fri Nov 21 11:39:23 EST 2014
Downloaded/printed by
Paul Jobmann (none) pursuant to License Agreement. No further reproductions authorized.

D653 Terminology Relating to Soil, Rock, and Contained Fluids
D698 Test Methods for Laboratory Compaction Characteristics of Soil Using Standard Effort (12 400 ft-lbf/ft^3 (600 kN-m/m^3))
D1556 Test Method for Density and Unit Weight of Soil in Place by Sand-Cone Method
D1557 Test Methods for Laboratory Compaction Characteristics of Soil Using Modified Effort (56,000 ft-lbf/ft^3 (2,700 kN-m/m^3))
D2167 Test Method for Density and Unit Weight of Soil in Place by the Rubber Balloon Method
D2487 Practice for Classification of Soils for Engineering Purposes (Unified Soil Classification System)
D2488 Practice for Description and Identification of Soils (Visual-Manual Procedure)
D2216 Test Methods for Laboratory Determination of Water (Moisture) Content of Soil and Rock by Mass
D2937 Test Method for Density of Soil in Place by the Drive-Cylinder Method
D3740 Practice for Minimum Requirements for Agencies Engaged in Testing and/or Inspection of Soil and Rock as Used in Engineering Design and Construction
D4253 Test Methods for Maximum Index Density and Unit Weight of Soils Using a Vibratory Table
D4254 Test Methods for Minimum Index Density and Unit Weight of Soils and Calculation of Relative Density
D4643 Test Method for Determination of Water (Moisture) Content of Soil by Microwave Oven Heating
D4718 Practice for Correction of Unit Weight and Water Content for Soils Containing Oversize Particles
D4944 Test Method for Field Determination of Water (Moisture) Content of Soil by the Calcium Carbide Gas Pressure Tester
D4959 Test Method for Determination of Water (Moisture) Content of Soil By Direct Heating
D6026 Practice for Using Significant Digits in Geotechnical Data
D7013 Guide for Nuclear Surface Moisture and Density Gauge Calibration Facility Setup

3. Terminology

3.1 *Definitions:* See Terminology D653 for general definitions.

3.2 *Definitions of Terms Specific to This Standard:*

3.2.1 *nuclear gauge*—a device containing one or more radioactive sources used to measure certain properties of soil and soil-aggregates.

3.2.2 *wet density*—same as bulk density (as defined in Terminology D653); the total mass (solids plus water) per total volume of soil or soil-aggregate.

3.2.3 *dry density*—same as density of dry soil or rock (as defined in Terminology D653); the mass of solid particles per the total volume of soil or soil-aggregate.

3.2.4 *gamma (radiation) source*—a sealed source of radioactive material that emits gamma radiation as it decays.

3.2.5 *neutron (radiation) source*—a sealed source of radioactive material that emits neutron radiation as it decays.

3.2.6 *Compton scattering*—the interaction between a gamma ray (photon) and an orbital electron where the gamma ray loses energy and rebounds in a different direction.

3.2.7 *detector*—a device to detect and measure radiation.

3.2.8 *probe*—a metal rod attached to a nuclear gauge in which a radioactive source or a detector is housed. The rod can be lowered to specified depths for testing. Probes containing only a radioactive source are commonly referred to as "Source Rods."

3.2.9 *thermalization*—the process of "slowing down" fast neutrons by collisions with light-weight atoms, such as hydrogen.

3.2.10 *water content*—the ratio of the mass of water contained in the pore spaces of soil or soil-aggregate, to the solid mass of particles in that material, expressed as a percentage (*this is sometimes referred to in some scientific fields as gravimetric water content to differentiate it from volumetric water cotent*).

3.2.11 *volumetric water content*—the volume of water as a percent of the total volume of soil or rock material.

3.2.12 *test count, n*—the measured output of a detector for a specific type of radiation for a given test.

3.2.13 *prepared blocks*—blocks prepared of soil, solid rock, concrete, and engineered materials, that have characteristics of various degrees of reproducible uniformity.

4. Significance and Use

4.1 The test method described is useful as a rapid, nondestructive technique for in-place measurements of wet density and water content of soil and soil-aggregate and the determination of dry density.

4.2 The test method is used for quality control and acceptance testing of compacted soil and soil-aggregate mixtures as used in construction and also for research and development. The nondestructive nature allows repetitive measurements at a single test location and statistical analysis of the results.

4.3 *Density*—The fundamental assumptions inherent in the methods are that Compton scattering is the dominant interaction and that the material is homogeneous.

4.4 *Water Content*—The fundamental assumptions inherent in the test method are that the hydrogen ions present in the soil or soil-aggregate are in the form of water as defined by the water content derived from Test Methods D2216, and that the material is homogeneous. (See 5.2)

NOTE 1—The quality of the result produced by this standard test method is dependent on the competence of the personnel performing it, and the suitability of the equipment and facilities used. Agencies that meet the criteria of Practice D3740 are generally considered capable of competent and objective testing/sampling/inspection, and the like. Users of this standard are cautioned that compliance with Practice D3740 does not in itself assure reliable results. Reliable results depend on many factors; Practice D3740 provides a means of evaluating some of those factors.

Copyright by ASTM Int'l (all rights reserved); Fri Nov 21 11:39:23 EST 2014
Downloaded/printed by
Paul Jobmann (none) pursuant to License Agreement. No further reproductions authorized.

5. Interferences

5.1 *In-Place Density Interferences*

5.1.1 Measurements may be affected by the chemical composition of the material being tested.

5.1.2 Measurements may be affected by non-homogeneous soils and surface texture (see 10.2).

5.1.3 Measurements in the Backscatter Mode are influenced more by the density and water content of the material in close proximity to the surface.

5.1.4 Measurements in the Direct Transmission mode are an average of the density from the bottom of the probe in the soil or soil aggregate back up to the surface of the gauge.

5.1.5 Oversize particles or large voids in the source-detector path may cause higher or lower density measurements. Where lack of uniformity in the soil due to layering, aggregate or voids is suspected, the test site should be excavated and visually examined to determine if the test material is representative of the in-situ material in general and if an oversize correction is required in accordance with Practice D4718.

5.1.6 The measured volume is approximately 0.0028 m^3 (0.10 ft^3) for the Backscatter Mode and 0.0057 m^3 (0.20 ft^3) for the Direct Transmission Mode when the test depth is 150 mm (6 in.). The actual measured volume is indeterminate and varies with the apparatus and the density of the material.

5.1.7 Other radioactive sources must not be within 9 m (30 ft.) of equipment in operation.

5.2 *In-Place Water (Moisture) Content Interferences*

5.2.1 The chemical composition of the material being tested can affect the measurement and adjustments may be necessary (see Section 10.6). Hydrogen in forms other than water and carbon will cause measurements in excess of the true value. Some chemical elements such as boron, chlorine, and cadmium will cause measurements lower than the true value.

5.2.2 The water content measured by this test method is not necessarily the average water content within the volume of the sample involved in the measurement. Since this measurement is by backscatter in all cases, the value is biased by the water content of the material closest to the surface. The volume of soil and soil-aggregate represented in the measurement is indeterminate and will vary with the water content of the material. In general, the greater the water content of the material, the smaller the volume involved in the measurement. Approximately 50 % of the typical measurement results from the water content of the upper 50 to 75 mm (2 to 3 in.).

5.2.3 Other neutron sources must not be within 9 m (30 ft) of equipment in operation.

6. Apparatus

6.1 *Nuclear Density / Moisture Gauge*—While exact details of construction of the apparatus may vary, the system shall consist of:

6.1.1 *Gamma Source*—A sealed source of high-energy gamma radiation such as cesium or radium.

6.1.2 *Gamma Detector*—Any type of gamma detector such as a Geiger-Mueller tube(s).

6.1.3 *Fast Neutron Source*—A sealed mixture of a radioactive material such as americium, radium and a target material such as beryllium, or a neutron emitter such as californium-252.

6.1.4 *Slow Neutron Detector*—Any type of slow neutron detector such as boron trifluoride or helium-3 proportional counter.

6.2 *Reference Standard*—A block of material used for checking instrument operation, correction of source decay, and to establish conditions for a reproducible reference count rate.

6.3 *Site Preparation Device*—A plate, straightedge, or other suitable leveling tool that may be used for planing the test site to the required smoothness, and in the Direct Transmission Method, guiding the drive pin to prepare a perpendicular hole.

6.4 *Drive Pin*—A pin of slightly larger diameter than the probe in the Direct Transmission Instrument used to prepare a hole in the test site for inserting the probe.

6.4.1 *Drive Pin Guide*—A fixture that keeps the drive pin perpendicular to the test site. Generally part of the site preparation device.

6.5 *Hammer*—Heavy enough to drive the pin to the required depth without undue distortion of the hole.

6.6 *Drive Pin Extractor*—A tool that may be used to remove the drive pin in a vertical direction so that the pin will not distort the hole in the extraction process.

6.7 *Slide Hammer,* with a drive pin attached, may also be used both to prepare a hole in the material to be tested and to extract the pin without distortion to the hole.

7. Hazards

7.1 These gauges utilize radioactive materials that may be hazardous to the health of the users unless proper precautions are taken. Users of these gauges must become familiar with applicable safety procedures and government regulations.

7.2 Effective user instructions, together with routine safety procedures and knowledge of and compliance with Regulatory Requirements, are a mandatory part of the operation and storage of these gauges.

8. Calibration

8.1 Calibration of the gauge will be in accordance with Annex A1 and Annex A2.

8.2 For further reference on gauge calibration, see Guide D7013, Standard Guide for Nuclear Surface Moisture and Density Gauge Calibration Facility Setup.

9. Standardization

9.1 Nuclear moisture density gauges are subject to long-term aging of the radioactive sources, which may change the relationship between count rates and the material density and water content. To correct for this aging effect, gauges are calibrated as a ratio of the measurement count rate to a count rate made on a reference standard or to an air-gap count (for the backscatter/air-gap ratio method).

9.2 Standardization of the gauge shall be performed at the start of each day's use, and a record of these data should be

Copyright by ASTM Int'l (all rights reserved); Fri Nov 21 11:39:23 EST 2014
Downloaded/printed by
Paul Jobmann (none) pursuant to License Agreement. No further reproductions authorized.

retained for the amount of time required to ensure compliance with either subsection 9.2.2 or 9.2.3, whichever is applicable. Perform the standardization with the gauge located at least 9 m (30 ft) away from other nuclear moisture density gauges and clear of large masses of water or other items which can affect the reference count rates.

9.2.1 Turn on the gauge and allow for stabilization according to the manufacturer's recommendations.

9.2.2 Using the reference standard, take a reading that is at least four times the duration of a normal measurement period (where a normal measurement period is typically one minute) to constitute one standardization check. Use the procedure recommended by the gauge manufacturer to establish the compliance of the standard measurement to the accepted range. Without specific recommendations from the gauge manufacturer, use the procedure in 9.2.3.

9.2.3 If the values of the current standardization counts are outside the limits set by Eq 1 and Eq 2, repeat the standardization check. If the second standardization check satisfies Eq 1 and Eq 2, the gauge is considered in satisfactory operating condition.

$$0.99(N_{dc})e^{\frac{-(ln(2))t}{T_{d(1/2)}}} \leq N_{d0} \leq 1.01(N_{dc})e^{\frac{-(ln(2))t}{T_{d(1/2)}}} \quad (1)$$

and

$$0.98(N_{mc})e^{\frac{-(ln(2))t}{T_{m(1/2)}}} \leq N_{m0} \leq 1.02(N_{mc})e^{\frac{-(ln(2))t}{T_{m(1/2)}}} \quad (2)$$

where:

$T_{d(1/2)}$ = the half-life of the isotope that is used for the density determination in the gauge. For example, for ^{137}Cs, the radioactive isotope most commonly used for density determination in these gauges, $T_{d(1/2)}$, is 11 023 days,

$T_{m(1/2)}$ = the half-life of the isotope that is used for the water content determination in the gauge. For example, for ^{241}Am, the radioactive isotope in Am:Be, the radioactive source most commonly used for water content determination in these gauges, $T_{m(1/2)}$, is 157 788 days,

N_{dc} = the density system standardization count acquired at the time of the last calibration or verification,

N_{mc} = the moisture system standardization count acquired at the time of the last calibration or verification,

N_{d0} = the current density system standardization count,

N_{m0} = the current moisture system standardization count,

t = the time that has elapsed between the current standardization test and the date of the last calibration or verification. The units selected for t, $T_{d(1/2)}$, and $T_{m(1/2)}$ should be consistent, that is, if $T_{d(1/2)}$ is expressed in days, then t should also be expressed in days,

$ln(2)$ = the natural logarithm of 2, which has a value of approximately 0.69315,

e = the inverse of the natural logarithm function, which has a value of approximately 2.71828.

9.2.4 If for any reason the measured density or moisture becomes suspect during the day's use, perform another standardization check.

9.3 *Example*—A nuclear gauge containing a ^{137}Cs source for density determination (half-life = 11 023 days) and an ^{241}Am:Be source for moisture determination (half-life = 157 788 days) is calibrated on March 1 of a specific year. At the time of calibration, the density standard count was 2800 counts per minute (prescaled), and the moisture standard count was 720 counts per minute (prescaled). According to Eq 1 and Eq 2 from Section 9.2.3, what is the allowed range of standard counts for November 1 of the same year?

9.3.1 For this example, a total of 245 days have elapsed between the date of calibration or verification (March 1) and the date of the gauge standardization (November 1). Therefore:

t = 245 days
$T_{d(1/2)}$ = 11 023 days
$T_{m(1/2)}$ = 157 788 days
N_{dc} = 2800 counts
N_{mc} = 720 counts

9.3.2 According to Eq 1, therefore, the lower limit for the density standard count taken on November 1, denoted by N_{d0}, is:

$$0.99(N_{dc})e^{\frac{-(ln(2))t}{T_{d(1/2)}}} = 0.99(2800)e^{\frac{-(ln(2))\cdot 245}{11\ 023}} = 2772e^{-0.01541} = 2730\ counts$$

9.3.3 Likewise, the upper limit for the density standard count taken on November 1, denoted by N_{d0}, is:

$$1.01(N_{dc})e^{\frac{-(ln(2))t}{T_{d(1/2)}}} = 1.01(2800)e^{\frac{-(ln(2))\cdot 245}{11\ 023}} = 2828e^{-0.01541} = 2785\ counts$$

9.3.4 Therefore, the density standard count acquired on November 1 should lie somewhere between 2730 and 2785 counts, or $2730 \leq N_{d0} \leq 2785$. According to Eq 2, the lower limit for the moisture standard count taken on November 1, denoted by N_{m0}, is:

$$0.98(N_{mc})e^{\frac{-(ln(2))t}{T_{m(1/2)}}} = 0.98(720)e^{\frac{-(ln(2))\cdot 245}{157\ 788}} = 706e^{-0.00108} = 705\ counts$$

9.3.5 Likewise, the upper limit for the moisture standard count taken on November 1, denoted by N_{d0}, is:

$$1.02(N_{mc})e^{\frac{-(ln(2))t}{T_{m(1/2)}}} = 1.02(720)e^{\frac{-(ln(2))\cdot 245}{157\ 788}} = 734e^{-0.00108} = 733\ counts$$

9.3.6 Therefore, the moisture standard count acquired on November 1 should lie somewhere between 705 and 733 counts, or $705 \leq N_{m0} \leq 733$.

10. Procedure

10.1 When possible, select a test location where the gauge will be placed at least 600 mm (24.0 in) away from any object sitting on or projecting above the surface of the test location, when the presence of this object has the potential to modify gauge response. Any time a measurement must be made at a specific location and the aforementioned clearance cannot be achieved, such as in a trench, follow the gauge manufacturer's correction procedure(s).

10.2 *Prepare the test site in the following manner:*

10.2.1 Remove all loose and disturbed material and additional material as necessary to expose the true surface of the material to be tested.

10.2.2 Prepare an area sufficient in size to accommodate the gauge by grading or scraping the area to a smooth condition so as to obtain maximum contact between the gauge and material being tested.

Copyright by ASTM Int'l (all rights reserved); Fri Nov 21 11:39:23 EST 2014
Downloaded/printed by
Paul Jobmann (none) pursuant to License Agreement. No further reproductions authorized.

10.2.3 The depth of the maximum void beneath the gauge shall not exceed 3 mm (⅛ in.). Use native fines or fine sand to fill the voids and smooth the surface with a rigid straight edge or other suitable tool. The depth of the filler should not exceed approximately 3 mm (⅛ in.).

10.2.4 The placement of the gauge on the surface of the material to be tested is critical to accurate density measurements. The optimum condition is total contact between the bottom surface of the gauge and the surface of the material being tested. The total area filled should not exceed approximately 10 percent of the bottom area of the gauge.

10.3 Turn on and allow the gauge to stabilize (warm up) according to the manufacturer's recommendations (see Section 9.2.1).

10.4 *Procedure A - The Direct Transmission Procedure:*

10.4.1 Select a test location where the gauge in test position will be at least 150 mm (6 in.) away from any vertical projection

10.4.2 Make a hole perpendicular to the prepared surface using the rod guide and drive pin. The hole should be a minimum of 50 mm (2 inches) deeper than the desired measurement depth and of an alignment that insertion of the probe will not cause the gauge to tilt from the plane of the prepared area.

10.4.3 Mark the test area to allow the placement of the gauge over the test site and to align the source rod to the hole. Follow the manufacturer's recommendations if applicable.

10.4.4 Remove the hole-forming device carefully to prevent the distortion of the hole, damage to the surface, or loose material to fall into the hole.

NOTE 2—Care must be taken in the preparation of the access hole in uniform cohesionless granular soils. Measurements can be affected by damage to the density of surrounding materials when forming the hole.

10.4.5 Place the gauge on the material to be tested, ensuring maximum surface contact as described previously in 10.2.4.

10.4.6 Lower the probe into the hole to the desired test depth. Pull the gauge gently toward the back, or detector end, so that the back side of the probe is in intimate contact with the side of the hole in the gamma measurement path.

NOTE 3—As a safety measure, it is recommended that a probe containing radioactive sources not be extended out of its shielded position prior to placing it into the test site. When possible, align the gauge so as to allow placing the probe directly into the test hole from the shielded position.

10.4.7 Keep all other radioactive sources at least 9 m (30 feet) away from the gauge to avoid any effect on the measurement.

10.4.8 If the gauge is so equipped, set the depth selector to the same depth as the probe.

10.4.9 Secure and record one or more one-minute density and water content readings. Read the in-place wet density directly or determine one by use of the calibration curve or table previously established.

10.4.10 Read the water content directly or determine the water content by use of the calibration curve or table previously established.

10.5 *Procedure B -The Backscatter or Backscatter/Air-Gap Ratio Procedure:*

10.5.1 Seat the gauge firmly (see Note 2).

10.5.2 Keep all other radioactive sources at least 9m (30 ft) away from the gauge to avoid affecting the measurement.

10.5.3 Set the gauge into the Backscatter (BS) position.

10.5.4 Secure and record one or more set(s) of one-minute density and water content readings. When using the backscatter/air-gap ratio mode, follow the manufacturer's instructions regarding gauge setup. Take the same number of readings for the normal measurement period in the air-gap position as in the standard backscatter position. Calculate the air-gap ratio by dividing the counts per minute obtained in the air-gap position by the counts per minute obtained in the standard position. Many gauges have built-in provisions for automatically calculating the air-gap ratio and wet density.

10.5.5 Read the in-place wet density or determine one by use of the calibration curve or table previously established.

10.5.6 Read the water content or determine one by use of the calibration curve or previously established table (see Section 10.6).

10.6 *Water Content Correction and Oversize Particle Correction*

10.6.1 For proper use of the gauge and accurate values of both water content and dry density, both of these corrections need to be made when applicable.

Prior to using the gauge-derived water content on any new material, the value should be verified by comparison to another ASTM method such as Test Methods D2216, D4643, D4944, or D4959. As part of a user developed procedure, occasional samples should be taken from beneath the gauge and comparison testing done to confirm gauge-derived water content values. All gauge manufacturers have a procedure for correcting the gauge-derived water content values.

10.6.2 When oversize particles are present, the gauge can be rotated about the axis of the probe to obtain additional readings as a check. When there is any uncertainty as to the presence of these particles it is advisable to sample the material beneath the gauge to verify the presence and the relative proportion of the oversize particles. A rock correction can then be made for both water content and wet density by the method in Practice D4718.

10.6.3 When sampling for water content correction or oversize particle correction, the sample should be taken from a zone directly under the gauge. The size of the zone is approximately 200 mm (8 in.) in diameter and a depth equal to the depth setting of the probe when using the direct transmission mode; or approximately 75 mm (3 in.) in depth when using the backscatter mode.

11. Calculation of Results

11.1 *Determine the Wet Density*

11.1.1 On most gauges read the value directly in kg/m^3 (lbm/ft^3). If the density reading is in "counts", determine the in-place wet density by use of this reading and the previously established calibration curve or table for density.

11.1.2 Record the density to the nearest 1 kg/m^3 (0.1 lbm/ft^3).

Copyright by ASTM Int'l (all rights reserved); Fri Nov 21 11:39:23 EST 2014
Downloaded/printed by
Paul Jobmann (none) pursuant to License Agreement. No further reproductions authorized.

11.2 *Water Content*

11.2.1 Use the gauge reading for w if the gauge converts to that value.

11.2.2 If the gauge determines water mass per unit volume in kg/m^3 (lbm / ft^3), calculate w using the formula:

$$w = \frac{M_m \times 100}{\rho_d} \quad (3)$$

or,

$$w = \frac{M_m \times 100}{\rho - M_m} \quad (4)$$

where:

w = water content
ρ_d = dry density in kg/m^3 or (lbm/ft^3),
ρ = wet density in kg/m^3 or (lbm/ft^3), and
M_m = water mass per unit volume in kg/m ^{3} or (lbm/ft^3)

11.2.3 If the water content reading was in "counts," determine the water mass per unit volume by use of this reading and previously established calibration curve or table. Then convert to gravimetric water content as per 11.2.2.

11.2.4 Record water content to the nearest 0.1 %.

11.3 *Determine the Dry Density of the soil by one of the following methods:*

11.3.1 If the water content is obtained by nuclear methods, use the gauge readings directly for dry density in kg/m^3 (lbm/ft ^{3}). The value can also be calculated from:

$$\rho_d = \rho - M_m \quad (5)$$

11.3.2 If the water content is to be determined from a sample of soil taken as prescribed in (10.6.3), follow the procedures and perform the calculations of the chosen Test Method (D2216, D4643, D4944, or D4959).

11.3.3 With a water content value from 11.3.2 calculate the dry density from:

$$\rho_d = \frac{100 \times \rho}{100 + w} \quad (6)$$

11.3.4 Report the dry density to the nearest 1 kg/m^3 (0.1 lbm/ft^3).

11.4 *Determine the Percent Compaction:*

11.4.1 It may be desired to express the in-place dry density as a percentage of a laboratory density such as Test Methods D698, D1557, D4253, or D4254. This relationship can be calculated by dividing the in-place dry density by the laboratory maximum dry density and multiplying by 100. Procedures for calculating relative density are provided in Test Method D4254 which requires that Test Method D4253 also be performed. Corrections for oversize material, if required, should be performed in accordance with Practice D4718.

12. Report: Test Data Sheet(s)/Form(s)/Final Report(s)

12.1 *The Field Data Records shall include, as a minimum, the following:*

12.1.1 Test Number or Test Identification.

12.1.2 Location of test (for example, Station number or GPS or Coordinates or other identifiable information).

12.1.3 Visual description of material tested.

12.1.4 Lift number or elevation or depth.

12.1.5 Name of the operator(s).

12.1.6 Make, model and serial number of the test gauge.

12.1.7 Test mode, Method A (direct transmission and test depth), or Method B (backscatter, backscatter/air-gap),

12.1.8 Standardization and adjustment data for the date of the tests.

12.1.9 Any corrections made in the reported values and reasons for these corrections (that is, over-sized particles, water content).

12.1.10 Maximum laboratory density value in kg/m^3 or lbm/ft^3.

12.1.11 Dry density in kg/m^3 or lbm/ft ^{3}.

12.1.12 Wet density in kg/m^3 or lbm/ft ^{3}.

12.1.13 Water content in percent.

12.1.14 Percent Compaction.

12.2 *Final Report (minimum required information):*

12.2.1 Test Number.

12.2.2 Gauge Serial number.

12.2.3 Location of test (for example, Station number or GPS or Coordinates or other identifiable information).

12.2.4 Lift number or elevation or depth.

12.2.5 Moisture (Water) content as a percent.

12.2.6 Maximum laboratory density value in kg/m^3 or lbm/ft^3.

12.2.7 Dry Density result in kg/m^3 or lbm/ft^3.

12.2.8 Percent Compaction.

12.2.9 Name of Operator(s).

13. Precision and Bias

13.1 *Precision:*

13.1.1 *Precision: Wet Density*—Criteria for judging the acceptability of wet density test results obtained by this test method are given in Table 1.[3] The values given are based upon an interlaboratory study in which five test sites containing soils, with wet densities as shown in column two were tested by eight different nuclear gauges and operators. The wet density of each test site was measured three times by each device.

13.1.2 *Precision: Water Mass Per Unit Volume*—Criteria for judging the acceptability of the water mass per unit volume results obtained by this test method are given in Table 2. The values given are based upon an inter-laboratory study in which five test sites containing soils with water mass per unit volume as shown in column two were tested by eight different nuclear gauges and operators. The water mass per unit volume of each test site was measured three times by each device.

13.1.3 *Precision: Water Content*—Criteria for judging the acceptability of the water content results obtained by this test method are given in Table 3. The values given are based upon an inter-laboratory study in which five test sites containing soils, with water content as shown in column two were tested by eight different nuclear gauges and operators. The water content of each test site was measured three times by each device.

[3] Supporting data have been filed at ASTM International Headquarters and may be obtained by requesting Research Report RR:D18-1004.

Copyright by ASTM Int'l (all rights reserved); Fri Nov 21 11:39:23 EST 2014
Downloaded/printed by
Paul Jobmann (none) pursuant to License Agreement. No further reproductions authorized.

TABLE 1 Results of Statistical Analysis (Wet Density)[A]

Direct Transmission:

Material[B]	Average kg/m^3 or (lbm/ft ^{3})	Repeatability Standard Deviation kg/m ^{3} or (lbm/ft^3)	Reproducibility Standard Deviation kg/m ^{3} or (lbm/ft^3)	95 % Repeatability Limit on the Difference Between Two Test Results kg/m^3 or (lbm/ft^3)[C]	95 % Reproducibility Limit on the Difference Between Two Test Results kg/m^3 or (lbm/ft^3)[C]
ML	2084 (130.1)	7.4 (0.46)	12.3 (0.77)	21 (1.3)	34 (2.1)
CL	1837 (114.7)	5.4 (0.34)	10.6 (0.66)	15 (0.9)	30 (1.9)
SP	1937 (120.9)	4.2 (0.26)	11.0 (0.68)	12 (0.7)	31 (1.9)

Backscatter:

Material[B]	Average kg/m^3 or (lbm/ft ^{3})	Repeatability Standard Deviation kg/m ^{3} or (lbm/ft^3)	Reproducibility Standard Deviation kg/m ^{3} or (lbm/ft^3)	95 % Repeatability Limit on the Difference Between Two Test Results kg/m^3 or (lbm/ft^3)[C]	95 % Reproducibility Limit on the Difference Between Two Test Results kg/m^3 or (lbm/ft^3)[C]
ML	1997 (124.6)	16.0 (1.00)	32.0 (2.00)	45 (2.8)	90 (5.6)

[A]The data used to establish this precision statement are contained in a Research Report available from ASTM Headquarters.[3]
[B]Materials are distinguished by soil types. For definitions of soil types see Practices D2487 and D2488.
[C]Two separate readings at a singular site with constant gauge orientation and settings.

TABLE 2 Results of Statistical Analysis (Water Mass Per Unit Volume)[A]

Material[B]	Average kg/m^3 or (lbm/ft ^{3})	Repeatability Standard Deviation kg/m ^{3} or (lbm/ft^3)	Reproducibility Standard Deviation kg/m ^{3} or (lbm/ft^3)	95 % Repeatability Limit on the Difference Between Two Test Results kg/m^3 or (lbm/ft^3)[C]	95 % Reproducibility Limit on the Difference Between Two Test Results kg/m^3 or (lbm/ft^3)[C]
ML	313 (19.6)	5.7 (0.36)	8.1 (0.50)	16 (1.0)	23 (1.4)
CL	193 (12.1)	6.1 (0.38)	8.5 (0.53)	17 (1.1)	24 (1.5)
SP	320 (20.0)	4.3 (0.27)	10.3 (0.64)	12 (0.7)	29 (1.8)

[A]The data used to establish this precision statement are contained in a Research Report available from ASTM Headquarters.[3]
[B]Materials are distinguished by soil types. For definitions of soil types see Practices D2487 and D2488.
[C]Two separate readings at a singular site with constant gauge orientation and settings.

TABLE 3 Results of Statistical Analysis (% Water Content)[A]

Material[B]	Average %	Repeatability Standard Deviation %	Reproducibility Standard Deviation %	95 % Repeatability Limit on the Difference Between Two Test Results %[C]	95 % Reproducibility Limit on the Difference Between Two Test Results %[C]
ML	17.7	0.39	0.59	1.1	1.7
CL	11.8	0.40	0.58	1.1	1.6
SP	19.8	0.32	0.81	0.9	2.3

[A]The data used to establish this precision statement are contained in a Research Report available from ASTM Headquarters.[3]
[B]Materials are distinguished by soil types. For definitions of soil types see Practices D2487 and D2488.
[C]Two separate readings at a singular site with constant gauge orientation and settings.

13.2 *Bias:*

13.2.1 There are no accepted reference values for these test methods, therefore, bias cannot be determined

14. Keywords

14.1 Compaction test; acceptance testing; construction control; quality control; field density; in-place density; wet density; water content; dry density; nuclear methods, nuclear gauge

Copyright by ASTM Int'l (all rights reserved); Fri Nov 21 11:39:23 EST 2014
Downloaded/printed by
Paul Jobmann (none) pursuant to License Agreement. No further reproductions authorized.

ANNEXES

(Mandatory Information)

A1. WET DENSITY CALIBRATION & VERIFICATION

A1.1 Calibration: Gauges shall be calibrated initially and after any repairs that can affect the gauge geometry or the existing calibration. To be within specified tolerances by procedures described in A1.2, calibration curves, tables, or equivalent coefficients shall be verified, at periods not to exceed 12 months. At any time these tolerances cannot be met, the gauge shall be calibrated to establish new calibration curves, tables, or equivalent coefficients. If the owner does not establish a verification procedure, the gauge shall be calibrated at a period not to exceed 12 months.

A1.1.1 Gauge Calibration Response shall be within ± 16 kg/m^3 (± 1.0 lbm/ft^3) on the block(s) on which the gauge was calibrated. This calibration may be done by the manufacturer, the user, or an independent vendor. Nuclear gauge response is influenced by the chemical composition of measured materials. This response must be taken into account in establishing the block density. The method used for calibration shall be capable of generating a general curve covering the entire density range of the materials to be tested in the field. The density of the block(s) shall be determined in such a manner that the estimated standard deviation of the measurement results shall not exceed 0.2 % of the measured block density.

A1.1.2 Reestablish or verify the density of the block(s) used to calibrate or verify calibrations at a period not to exceed 5 years. The density values of the established block(s) of materials that have the potential for changes over time in density or moisture content, such as soil, concrete, or solid rock, shall be reestablished or verified at periods not exceeding 12 months.

NOTE A1.1—Changes in background conditions or locations of blocks used for gauge calibrations or verification of calibrations can impact measurements on those blocks. Care must be taken to ensure uniform conditions when performing gauge calibrations or verifying gauge calibrations.

A1.1.3 Sufficient data shall be taken on each density block to ensure a gauge count precision of at least one-half the gauge count precision required for field use assuming field use measurement of one minute duration and four-minute duration used for calibration, or an equivalent relationship. The data may be presented in the form of a graph, table, equation coefficients, or stored in the gauge, to allow converting the count rate data to density.

A1.1.4 The method and test procedures used in establishing the calibration count rate data shall be the same as those used for obtaining the field count rate data.

A1.1.5 The material type, actual density, or established density of each calibration block used to establish or verify the gauge calibration shall be stated as part of the calibration data for each measurement depth. If the actual or established block density varies with measurement depth, then the density data for each measurement depth shall be stated as part of the calibration.

A1.1.6 The calibration blocks should be sufficient in size so that the count rate will not change if the block is enlarged in any dimension.

NOTE A1.2—Minimum surface dimensions of approximately 610 mm by 430 mm (24 × 17 inches), have proven satisfactory. For the backscatter method a minimum depth of 230 mm (9 inches) is adequate; while for the direct transmission method the depth should be at least 50 mm (2 inches) deeper than the deepest rod penetration depth. A larger surface area should be considered for the backscatter/air-gap method. For blocks with widths or lengths smaller than the sizes specified, follow the block manufacturer's recommendations for proper installation and use.

The most successful blocks that have been established for calibration have been made of magnesium, aluminum, aluminum/magnesium, granite, and limestone. These blocks have been used in combination with each other, with historical curve information, and with other prepared block(s) to produce accurate and reliable calibration.

A1.2 Verification: The method used for verification should be capable of confirming the accuracy of the general calibration curve representing the density range of the materials to be tested in the field. The verification process and the resulting tolerances obtained over the depths at which the gauge will be used, shall be formally recorded and documented. If this verification process indicates a variance beyond the specified tolerances, the gauge shall be calibrated

A1.2.1 Gauge verification response shall be within ±32 kg/m^3 (±2.0 lbm/ft^3) on block(s) of established density at each calibration depth.

A1.2.2 Using the procedure described in either A3.1.1 or A3.1.2, ensure a gauge count precision of at least one-half the gauge count precision required for field use, assuming field use measurement of one-minute duration and four-minute duration are used for calibration, or an equivalent relationship.

A1.2.3 The gauge calibration may be verified on calibration block(s) which were used for calibration of the gauge, or prepared blocks.

A1.2.4 Prepared block(s) of soil, solid rock, concrete, and engineered block(s) that have characteristics of reproducible uniformity may be used, but care must be taken to establish density values and to minimize changes in density and water content over time.

A1.2.5 Density values of prepared block(s) shall be determined in such a manner that the estimated standard deviation of the measurement results shall not exceed 0.5 % of the measured block density value.

A1.2.6 Reestablish or verify density values for prepared block(s) of soil, solid rock, or concrete that have the potential of changes over time in density or moisture content at periods not exceeding 12 months.

A1.2.7 The method used to establish or verify the block(s) density values shall be stated as part of the verification data.

Copyright by ASTM Int'l (all rights reserved); Fri Nov 21 11:39:23 EST 2014
Downloaded/printed by
Paul Jobmann (none) pursuant to License Agreement. No further reproductions authorized.

A1.2.8 All gauges shall be verified or calibrated at a minimum frequency of 12 months.

A2. WATER CONTENT CALIBRATION and VERIFICATION

A2.1 Calibration: Gauges shall be calibrated initially and after any repairs that can affect the gauge geometry or the existing calibration. Calibration curves, tables, or equivalent coefficients shall be verified at periods, not exceeding 12 months, to be within specified tolerances by procedures described in A2.2. At any time these tolerances cannot be met, the gauge shall be calibrated to establish new calibration curves, tables, or equivalent coefficients. If the owner does not establish a verification procedure, the gauge shall be calibrated at a period not to exceed 12 months.

A2.1.1 Gauge Calibration Response shall be within 16 kg/m^3 (1 lbm/ft^3) on the block(s) on which the gauge was calibrated. This calibration may be done by the gauge manufacturer, the user, or an independent vendor. The block(s) used for calibration should be capable of generating a general curve covering the entire water content range of the materials to be tested in the field. The calibration curve can be established using counts and water contents of standard blocks, previous factory curve information, or historical data. Due to the effect of chemical composition, the calibration supplied by the manufacturer with the gauge will not be applicable to all materials. It shall be accurate for silica and water; therefore, the calibration must be verified and adjusted, if necessary, in accordance with section A2.2

A2.1.2 Reestablish or verify the assigned water content of blocks used to calibrate or verify calibrations at periods which shall be recommended by the block manufacturer. The water content values of blocks prepared of materials that have the potential of changes over time in density or moisture content, such as soil, concrete, or solid rock, shall be reestablished or verified at periods not exceeding 12 months.

A2.1.3 All calibration blocks should be sufficient in size so that the count rate will not change if the block is enlarged in any dimension.

NOTE A2.1—Dimensions of approximately 610 mm long by 460 mm wide by 200 mm deep (approximately 24 by 18 by 8 inches) have proven satisfactory. For blocks with width or length smaller than the sizes specified, follow block manufacturer's recommendations for proper installation and use.

A2.1.4 Prepare a homogeneous block of hydrogenous materials having an equivalent water mass per unit volume value determined by comparison (using a nuclear instrument) with a saturated silica sand standard prepared in accordance with A2.1.3. Metallic blocks used for wet density calibration such as magnesium or aluminum are a convenient zero water mass per unit volume block. A block of alternating sheets of aluminum or magnesium and polyethylene is convenient for a high water mass per unit volume block.

A2.1.5 Prepare containers of compacted material with a water content determined by oven dry (Test Method D2216) and a wet density calculated from the mass of the material and the inside dimensions of the container. The water mass per unit volume may be calculated as follows:

$$M_m = \frac{\rho \times w}{100 + w} \tag{A2.1}$$

where:

M_m = water mass per unit volume, kg/m^3 or lbm/ft^3,
w = water content, percent of dry mass, and
ρ = wet (total) density, kg/m^3 or lbm/ft^3.

A2.1.6 Where neither of the previous calibration standards are available, the gauge may be calibrated by using a minimum of three selected test sites in an area of a compaction project where material has been placed at several different water contents. The test sites shall represent the range of water contents over which the calibration is to be used. At least three replicate nuclear measurements shall be made at each test site. The density at each site shall be verified by measurements with calibrated equipment in accordance with the procedures described in this standard, Test Methods D1556, D2167, or D2937. The water content of the material at each of the test sites shall be determined using Test Method D2216. Use the mean value of the replicate readings as the calibration point value for each test site.

A2.2 Verification: The method used for verification should be capable of confirming the accuracy of the general calibration curve representing the water content of the materials to be tested in the field. The verification process and resultant tolerances obtained shall be formally recorded and documented. If the verification process indicates a variance beyond the specified tolerances, new calibration curves, tables, or equivalent coefficients shall be established.

A2.2.1 Verify an existing calibration by taking sufficient number of counts on one or more blocks of established water content to ensure the accuracy of the existing calibration within ±16 kg/m^3 or (±1 lbm/ft^3). The water content block(s) should be prepared in accordance with section A2.1.4 and A2.1.5

A2.2.2 Sufficient data shall be taken to ensure a gauge count precision of at least one half the gauge count precision required for field use assuming field use measurement of one minute duration and four minute duration used for calibration, or an equivalent relationship.

A2.2.3 Calibration block(s) used to establish calibration parameters and prepared blocks can be used to verify calibration.

Copyright by ASTM Int'l (all rights reserved); Fri Nov 21 11:39:23 EST 2014
Downloaded/printed by
Paul Jobmann (none) pursuant to License Agreement. No further reproductions authorized.

A2.2.4 Prepared block(s) that have characteristics of reproducible uniformity can be used, but care must be taken to minimize changes in density and water content over time.

A2.2.5 The established water content of the block(s) used for verification of the gauge shall be stated as part of the verification data.

A2.2.6 All gauges shall be verified or calibrated at a minimum frequency of 12 months.

A3. GAUGE PRECISION

A3.1 Gauge precision is defined as the change in density or water mass per unit volume that occurs corresponding to a one standard deviation change in the count due to the random decay of the radioactive source. The density of the material and time period of the count must be stated.

Calculate using the methods in either A3.1.1 or A3.1.2. For wet density , use a material having a density of 2000 ± 80 kg/m^3 (125.0 ± 5.0 lbm/ft^3). Typical values of P are < 10 kg/m^3 (0.6 lbm/ft^3) in backscatter or backscatter/air-gap; and < 5 kg/m^3 (0.3 lbm/ft^3) for direct transmission measured at a 15 cm (6 in) depth. Use a water mass per unit volume value of 160 ± 10 kg/m^3 (10.0 ± 0.6 lbm/ft ^{3}) for determining slope and count rates. The value of P is typically less than 4.8 kg/m^3 (0.3 lbm/ft^3).

A3.1.1 *Gauge Precision - Slope Method*

Determine the gauge precision of the system, *P*, from the slope of the calibration curve, *S*, and the standard deviation, σ, of the signals (detected gamma rays or detected neutrons) in counts per minute (cpm), as follows:

$$P = \sigma / S \tag{A3.1}$$

where:

P = precision
σ = standard deviation, cpm
S = slope, cpm/kg/m^3 or cpm/lbm/ft^3

NOTE A3.1—Displayed gauge counts may be scaled. Contact the manufacturer to obtain the appropriate pre-scale factor.

A3.1.2 *Gauge Precision – Repetitive Method*

Determine the standard deviation of a minimum of 20 repetitive readings of one minute each, without moving the gauge between readings. Calculate the standard deviation of the resulting readings. This is the gauge precision.

A4. FIELD MOISTURE CONTENT ADJUSTMENTS

A4.1 The calibration should be checked prior to performing tests on materials that are distinctly different from material types previously used in obtaining or adjusting the calibration. Sample materials may be selected by either A2.1.5 or A2.1.6. The amount of water shall be within ±2 % of the water content established as optimum for compaction for these materials. Determine the water content w. A microwave oven or direct heater may be utilized for drying materials that are not sensitive to combustion of organic material, in addition to the method listed in A2.1.6. A minimum of three comparisons is recommended and the mean of the observed differences used as the correction factor.

A4.2 Container(s) of compacted material taken from the test site shall be prepared in accordance with A2.1.5.

A4.3 Test site(s) or the compacted material shall be selected in accordance with the procedures in A2.1.6.

A4.4 The method and test procedures used in obtaining the count rate to establish the error must be the same as those used for measuring the water content of the material to be tested.

A4.5 The mean value of the difference between the moisture content of the test samples as determined in A2.1.5 or A2.1.6 and the values measured with the gauge shall be used as a correction to measurements made in the field. Many gauges utilizing a microprocessor have provision to input a correction factor that is established by the relative values of water content as a percentage of dry density, thus eliminating the need to determine the difference in mass units of water.

Copyright by ASTM Int'l (all rights reserved); Fri Nov 21 11:39:23 EST 2014
Downloaded/printed by
Paul Jobmann (none) pursuant to License Agreement. No further reproductions authorized.

SUMMARY OF CHANGES

Committee D18 has identified the location of selected changes to this standard since the last issue, D6938–08a, that may impact the use of this standard. (Approved May 1, 2010)

(*1*) Revised Section 13 Precision and Bias to include a table of single-operator and multi-laboratory precision values for the measurement quantity water mass per unit volume. Revised significant digits in this section for consistency with Practice E29.

(*2*) Added new Table 2 and renumbered subsequent tables.

(*3*) Revised Table 1 and Table 3 for consistency with Practice E691.

ASTM International takes no position respecting the validity of any patent rights asserted in connection with any item mentioned in this standard. Users of this standard are expressly advised that determination of the validity of any such patent rights, and the risk of infringement of such rights, are entirely their own responsibility.

This standard is subject to revision at any time by the responsible technical committee and must be reviewed every five years and if not revised, either reapproved or withdrawn. Your comments are invited either for revision of this standard or for additional standards and should be addressed to ASTM International Headquarters. Your comments will receive careful consideration at a meeting of the responsible technical committee, which you may attend. If you feel that your comments have not received a fair hearing you should make your views known to the ASTM Committee on Standards, at the address shown below.

This standard is copyrighted by ASTM International, 100 Barr Harbor Drive, PO Box C700, West Conshohocken, PA 19428-2959, United States. Individual reprints (single or multiple copies) of this standard may be obtained by contacting ASTM at the above address or at 610-832-9585 (phone), 610-832-9555 (fax), or service@astm.org (e-mail); or through the ASTM website (www.astm.org). Permission rights to photocopy the standard may also be secured from the ASTM website (www.astm.org/COPYRIGHT/).

Copyright by ASTM Int'l (all rights reserved); Fri Nov 21 11:39:23 EST 2014
Downloaded/printed by
Paul Jobmann (none) pursuant to License Agreement. No further reproductions authorized.

Designation: D7263 – 09

Standard Test Methods for Laboratory Determination of Density (Unit Weight) of Soil Specimens[1]

This standard is issued under the fixed designation D7263; the number immediately following the designation indicates the year of original adoption or, in the case of revision, the year of last revision. A number in parentheses indicates the year of last reapproval. A superscript epsilon (ε) indicates an editorial change since the last revision or reapproval.

1. Scope

1.1 These test methods describe two ways of determining the total/moist and dry densities (unit weights) of intact, disturbed, remolded, and reconstituted (compacted) soil specimens. Density (unit weight) as used in this standard means the same as "bulk density" of soil as defined by the Soil Science Society of America. Intact specimens may be obtained from thin-walled sampling tubes, block samples, or clods. Specimens that are remolded by dynamic or static compaction procedures may also be measured by these methods. These methods apply to soils that will retain their shape during the measurement process and may also apply to other materials such as soil-cement, soil-lime, soil-bentonite or solidified soil-bentonite-cement slurries. It is common for the density (unit weight) of specimens after removal from sampling tubes and compaction molds to be less than the value based on tube or mold volumes, or of in-situ conditions. This is due to the specimen swelling after removal of lateral pressures.

1.1.1 Method A covers the procedure for measuring the volume of wax coated specimens by determining the quantity of water displaced.

1.1.1.1 This method only applies to specimens in which the wax will not penetrate the outer surface of the specimen.

1.1.2 Method B covers the procedure by means of the direct measurement of the dimensions and mass of a specimen, usually one of cylindrical shape. Intact and reconstituted/remolded specimens may be tested by this method in conjunction with strength, permeability (air/water) and compressibility determinations.

1.2 The values stated in SI units are to be regarded as the standard. The values stated in inch-pound units are approximate.

1.3 All observed and calculated values shall conform to the guidelines for significant digits and rounding established in Practice D6026.

1.3.1 The method used to specify how data are collected, calculated, or recorded in this standard is not directly related to the accuracy with which the data can be applied in design or other uses, or both. How one applies the results obtained using this standard is beyond its scope.

1.4 *This standard does not purport to address all of the safety concerns, if any, associated with its use. It is the responsibility of the user of this standard to establish appropriate safety and health practices and determine the applicability of regulatory limitations prior to use.*

2. Referenced Documents

2.1 *ASTM Standards:*[2]

D653 Terminology Relating to Soil, Rock, and Contained Fluids

D698 Test Methods for Laboratory Compaction Characteristics of Soil Using Standard Effort (12 400 ft-lbf/ft^3 (600 kN-m/m^3))

D854 Test Methods for Specific Gravity of Soil Solids by Water Pycnometer

D1557 Test Methods for Laboratory Compaction Characteristics of Soil Using Modified Effort (56,000 ft-lbf/ft^3 (2,700 kN-m/m^3))

D1587 Practice for Thin-Walled Tube Sampling of Soils for Geotechnical Purposes

D2166 Test Method for Unconfined Compressive Strength of Cohesive Soil

D2216 Test Methods for Laboratory Determination of Water (Moisture) Content of Soil and Rock by Mass

D2487 Practice for Classification of Soils for Engineering Purposes (Unified Soil Classification System)

D2488 Practice for Description and Identification of Soils (Visual-Manual Procedure)

D3550 Practice for Thick Wall, Ring-Lined, Split Barrel, Drive Sampling of Soils

D3740 Practice for Minimum Requirements for Agencies Engaged in Testing and/or Inspection of Soil and Rock as

[1] These test methods are under the jurisdiction of ASTM Committee D18 on Soil and Rock and are the direct responsibility of Subcommittee D18.03 on Texture, Plasticity and Density Characteristics of Soils.

Current edition approved March 15, 2009. Published April 2009. DOI: 10.1520/D7263-09.

[2] For referenced ASTM standards, visit the ASTM website, www.astm.org, or contact ASTM Customer Service at service@astm.org. For *Annual Book of ASTM Standards* volume information, refer to the standard's Document Summary page on the ASTM website.

Copyright © ASTM International, 100 Barr Harbor Drive, PO Box C700, West Conshohocken, PA 19428-2959. United States

Copyright by ASTM Int'l (all rights reserved); Mon Oct 21 12:27:08 EDT 2013
Downloaded/printed by
Martin Burford (Becc Inc) pursuant to License Agreement. No further reproductions authorized.

Used in Engineering Design and Construction
D4220 Practices for Preserving and Transporting Soil Samples
D4318 Test Methods for Liquid Limit, Plastic Limit, and Plasticity Index of Soils
D4753 Guide for Evaluating, Selecting, and Specifying Balances and Standard Masses for Use in Soil, Rock, and Construction Materials Testing
D6026 Practice for Using Significant Digits in Geotechnical Data
E2251 Specification for Liquid-in-Glass ASTM Thermometers with Low-Hazard Precision Liquids

2.2 *Other Reference:*

Soil Science Society of America Glossary of Soil Science Terms[3]

3. Terminology

3.1 Refer to Terminology D653 for standard definitions of terms.

4. Significance and Use

4.1 Dry density, as defined as "density of soil or rock" in Terminology D653 and "bulk density" by soil scientists, can be used to convert the water fraction of soil from a mass basis to a volume basis and vise-versa. When particle density, that is, specific gravity (Test Methods D854) is also known, dry density can be used to calculate porosity and void ratio (see Appendix X1). Dry density measurements are also useful for determining degree of soil compaction. Since moisture content is variable, moist soil density provides little useful information except to estimate the weight of soil per unit volume, for example, pounds per cubic yard, at the time of sampling. Since soil volume shrinks with drying of swelling soils, bulk density will vary with moisture content. Hence, the water content of the soil should be determined at the time of sampling.

4.2 Densities (unit weights) of remolded/reconstituted specimens are commonly used to evaluate the degree of compaction of earthen fills, embankments, etc. Dry density values are usually used in conjunction with compaction curve values (Test Methods D698 and D1557).

4.3 Density (unit weight) is one of the key components in determining the mass composition/phase relations of soil, see Appendix X1.

NOTE 1—The quality of the result produced by this standard is dependent on the competence of the personnel performing it and the suitability of the equipment and facilities used. Agencies that meet the criteria of Practice D3740 are generally considered capable of competent and objective testing/sampling/inspection/etc. Users of this standard are cautioned that compliance with Practice D3740 does not in itself assure reliable results. Reliable results depend on several factors; Practice D3740 provides a means of evaluating some of these factors.

5. Apparatus

5.1 For Method A the following apparatus are required:

5.1.1 *Balance*—All balances must meet the requirements of Specification D4753 and this section. A Class GP1 balance of 0.01 g readability is required for specimens having a mass up to 200 grams and a Class GP2 balance of 0.1 g readability is required for specimens having a mass over 200 grams. For method A, the balance must be capable of measuring the mass of the specimen suspended in water. This is usually accomplished by a weighing hook built into the balance for that purpose, or a yoke assemblage is placed upon the pan which suspends a thin, non-absorbent string or wire, that is, a nylon line, etc., below the balance into the water reservoir.

5.1.2 *Drying Oven*—A thermostatically controlled, preferably of the forced-draft type, capable of maintaining a uniform temperature of 110 ± 5°C throughout the drying chamber.

5.1.3 *Wax*—Non-shrinking, paraffin and/or microcrystalline wax that has a known and constant density, ρ_ρ, to four significant figures and that does not change after repeated melting and cooling cycles.

NOTE 2—The waxes generally used are commercially available and have density values in the range of 0.87 to 0.91 g/cm^3 or Mg/m^3.

5.1.4 *Wax-Melting Container*—Used to melt the wax, but should not allow the wax to overheat. A container heated by hot water, preferably thermostatically controlled, is satisfactory. The wax should be heated to only slightly above the melting point to avoid flashing of the wax vapors and to permit quickly forming a uniform surface coating of wax. **Warning—**Vapors given off by molten wax ignite spontaneously above 205°C (400°F) and should not be allowed to come in contact with the heating element or open flame.

5.1.5 *Wire Basket*—A wire basket of 3.35 mm or finer mesh of approximately equal width and height of sufficient size to contain the specimen. The basket shall be constructed to prevent trapping air when it is submerged. The basket is suspended from the balance by a fine thread or string. A hairnet may also be used in lieu of the basket for smaller soil specimens.

5.1.6 *Container*—A container or tank of sufficient size to contain the submerged basket and specimen.

5.1.7 *Specimen Container*—A corrosion-resistant container of sufficient size to contain the specimen for water content determination.

5.1.8 *Thermometer*—Capable of measuring the temperature range within which the test is being performed graduated in a 0.1 degree C division scale and meeting the requirements of Specification E2251.

5.1.9 *Container Handling Apparatus*—Gloves or suitable holder for moving and handling hot containers.

5.1.10 *Miscellaneous*—Paintbrush, trimming tools, specimen containers, and data sheets provided as required.

5.2 For Method B the following apparatus are needed:

5.2.1 *Balance*—See 5.1.1.

5.2.2 *Drying Oven*—See 5.1.2.

5.2.3 *Specimen-Size Measurement Devices*—Devices used to determine the height and width or diameter of the specimen shall measure the respective dimensions to four significant digits and shall be constructed so that their use will not indent or penetrate into the specimen.

NOTE 3—Circumferential measuring tapes are recommended over calipers for measuring the diameter of cylindrical specimens.

[3] Available online: www.soils.org/sssagloss/index.php.

Copyright by ASTM Int'l (all rights reserved); Mon Oct 21 12:27:08 EDT 2013
Downloaded/printed by
Martin Burford (Becc Inc) pursuant to License Agreement. No further reproductions authorized.

5.2.4 *Apparatus for Preparing Reconstituted or Remolded Specimens (Optional)*—Such apparatus is only required if these types of specimens are being tested.

5.2.5 *Miscellaneous Apparatus*—Specimen trimming and carving tools including a wire saw, steel straightedge, miter box and vertical trimming lathe, specimen containers, and data sheets shall be provided as required.

6. Samples and Test Specimens

6.1 *Samples*—Intact samples shall be preserved and transported in accordance with Practice D4220 Groups C and D soil. Compacted or remolded specimens shall be preserved in accordance with Practice D4220 Group B soil. Maintain the samples that are stored prior to testing in non-corrodible airtight containers at a temperature between approximately 3° and 30°C and in an area that prevents direct contact with sunlight.

6.2 *Specimens*—Specimens for testing shall be sufficiently cohesive and firm to maintain shape during the measuring procedure if Method A is used, see 1.1.1.1. Specimens shall have a minimum dimension of 30 mm (1.3 in.) and the largest particle contained within the test specimen shall be smaller than one-tenth of the specimen's smallest dimension. For specimens having a dimension of 72 mm (2.8 in.) or larger, the largest particle size shall be smaller than one-sixth of the specimen's smallest dimension. If, after completion of a test on an intact specimen, visual observations indicate that larger particles than permitted are present, indicate this information in the remarks section of the report of test data.

7. Procedure

7.1 Record all identifying information for the specimen, such as project, boring number, depth, sample type (that is, tube, trimmed, etc.), visual soil classification (Practice D2488), or other pertinent data.

7.2 *Method A—Water Displacement:*

7.2.1 Determine, if not previously established, the density of the wax to be used to four significant digits (see 5.1.3).

7.2.2 Prepare specimens in an environment that minimizes any changes in water content. For some soils, changes in water content are minimized by trimming specimens in a controlled environment, such as a controlled high-humidity room/enclosure.

7.2.3 If required, cut a specimen meeting the size requirements given in 6.2 from the sample to be tested. If required, trim the specimen to a fairly regular shape. Re-entrant angles should be avoided, and any cavities formed by large particles being pulled out should be patched carefully with material from the trimmings. Handle specimens carefully to minimize disturbance, change in shape, or change in water content. Typically, for most samples, changes in water content are minimized by trimming specimens, in a controlled environment, such as a controlled high-humidity room/enclosure.

7.2.4 Determine and record the moist mass of the soil specimen (M_t) to four significant figures in g or kg.

7.2.5 Cover the specimen with a thin coat of melted wax, either with a paintbrush or by dipping the specimen in a container of melted wax. Apply a second coat of wax after the first coat has hardened. The wax should be sufficiently warm to flow when brushed on the specimen, yet it should not be so hot that it dries the soil.

NOTE 4—If overheated wax comes in contact with the soil specimen, it may cause the moisture to vaporize and form air bubbles under the wax. Bubbles may be trimmed out and filled with wax.

7.2.6 Determine and record the mass of the wax-coated specimen in air (M_C) to four significant figures in g or kg.

7.2.7 Determine and record the submerged mass of the wax-coated specimen (M_{sub}) to four significant digits in g or kg. This is done by placing the specimen in a wire basket hooked onto a balance and immersing the basket and specimen in a container of water. In order to directly measure the submerged mass of the wet soil and wax, the balance must have been previously balanced (tared to zero) with the wire basket completely submerged in the container of water. Make sure that the specimen and basket is fully submerged, and that the basket is not touching the sides or bottom of the container.

7.2.8 Record the temperature of the water to 0.1 degrees C.

NOTE 5—Maintain water bath temperature and submerged basket depth the same as when calibrated or zeroed.

7.2.9 Remove the wax from the specimen. It can be peeled off after a break is made in the wax surface.

7.2.10 Determine the water content to the nearest 0.1 percent in accordance with Method D2216.

NOTE 6—The water content may be determined from an adjacent piece of soil or from trimmings if appropriate, for example, if the wax becomes difficult to remove from the specimen. Note in the report if water content is not from the specimen itself.

7.3 *Method B—Direct Measurement:*

7.3.1 *Intact Specimens*—Prepare intact specimens from large block samples or from samples secured in accordance with Practice D1587 or other acceptable tube sampling procedures, such as Practice D3550. Specimens can be obtained from intact block samples using a sharp cutting ring. Handle samples/specimens carefully to minimize disturbance, changes in cross section, or change in water content, see 6.1. Specimens are usually cubical or cylindrical in shape.

NOTE 7—Core sampling might be difficult or impossible in gravelly or hard dry soils. Wet soils tend to be more plastic and subject to compression.

7.3.1.1 Specimens obtained by tube sampling may be tested without extrusion except for cutting the end surfaces plane and perpendicular to the longitudinal axis of the sampling tube. The height and inner dimensions of the tube may be taken to represent specimen dimensions.

NOTE 8—Some soils may expand into the sampling tube with a resultant change in volume from the original in-situ condition.

7.3.1.2 Trim specimens in an environment that minimizes any change in water content, see 7.2.2. Where removal of gravel or crumbling resulting from trimming causes voids on the surface of the specimen, carefully fill the voids with remolded soil obtained from the trimmings. When the sample condition permits, a vertical trimming lathe may be used to reduce cylindrical specimens to a uniform diameter.

Copyright by ASTM Int'l (all rights reserved); Mon Oct 21 12:27:08 EDT 2013
Downloaded/printed by
Martin Burford (Becc Inc) pursuant to License Agreement. No further reproductions authorized.

7.3.1.3 After obtaining uniform dimensions, place the specimen in a miter box or trimming collar (especially for friable soils) and cut the specimen to a uniform height with a wire saw or other suitable device, such as a sharpened steel straightedge. Perform one or more water content determinations on material obtained during the trimming of the specimen in accordance with Test Method D2216 for the estimated water content(s). Final water content shall be performed on the whole specimen or representative slice (if other testing such as plasticity limits, Test Methods D4318, are required) at the end of the test. Determine and record the mass (g) and dimensions (mm) of the specimen to four significant digits using the applicable apparatus described in 5.2. A minimum of three height measurements (approximately 120° apart if three, 90° apart if four, etc.) and at least three diameter measurements at the quarter points of the height shall be made to determine each the average height and diameter of cylindrical specimens. A minimum of three measurements each of length, width and height shall be made to determine the volume of cubical specimens.

NOTE 9—Test Method D2166, section 6.2, describes a procedure for preparing intact test specimens for strength testing.

7.3.2 *Remolded/Reconstituted (Compacted) Specimens*—Specimens shall be prepared as prescribed by the individual assigning the test or as prescribed by the applicable related test procedure. After a specimen is formed, trim (if necessary) the ends perpendicular to the longitudinal axis, remove the mold, and determine the mass and dimensions of the test specimens in accordance with 7.3.1.3. The height and inner dimensions of the mold may be taken to represent specimen dimensions.

NOTE 10—It is common for the density (unit weight) of the specimen after removal from the mold to be less than the value based on the volume of the mold. This occurs as a result of the specimen swelling after removal of the lateral confinement due to the mold.

8. Calculations

8.1 *Water Content, w*—Calculate in accordance with Test Method D2216 to four significant digits.

8.2 Calculate the moist density to four significant figures as follows:

8.2.1 *Method A—Water Displacement:*

$$\rho_m = M_t/[((M_c - M_{sub})/\rho_w) - ((M_c - M_t)/\rho_\rho)] \quad (1)$$

where:

M_t = mass of moist/total soil specimen, g,
M_c = mass of wax-coated specimen, g,
M_{sub} = mass of submerged paraffin-coated specimen, g,
ρ_ρ = density of paraffin, g/cm^3 or Mg/m^3,
ρ_w = density of water at test temperature, g/cm^3 or Mg/m^3, (see Test Methods D854, Table 1), and
ρ_m = density of total (moist) soil specimen, g/cm^3 or Mg/m^3.

8.2.2 *Method B—Direct Measurement:*

$$\rho_m = (M_t/V) \quad (2)$$

where:

V = volume of moist soil specimen, cm^3.

8.2.2.1 *Cylindrical Shape:*

$$V = (\pi\, d^2\, h)/4000 \quad (3)$$

where:

d = average specimen diameter, mm, and
h = average specimen height, mm.

8.2.2.2 *Cubical Shape:*

$$V = (l\, w\, h)/4000 \quad (4)$$

where:

l = average length, mm,
w = average width, mm, and
h = average height, mm.

8.3 Calculate the dry density for either method A or B as follows:

$$\rho_d = \rho_m/(1 + w/100) \quad (5)$$

where:

ρ_d = dry density of soil, g/cm^3 or Mg/m^3, and
w = water content of soil specimen (in percent), to nearest four significant digits.

8.4 Calculate the moist/total and dry unit weights to four significant figures for either method A or B as follows:

$$\gamma_m = 62.428\ \rho_m \text{ in lbf/ft}^3 \quad \text{and} \quad \gamma_d = 62.428\ \rho_d \text{ in lbf/ft}^3 \quad (6)$$

$$\gamma_m = 9.80665\ \rho_m \text{ in kN/m}^3 \quad \text{and} \quad \gamma_d = 9.80665\ \rho_d \text{ in kN/m}^3$$

where:

γ_m = moist/total unit weight of specimen, and
γ_d = dry unit weight of soil specimen.

9. Report: Test Data Sheet/Form

9.1 The report (data sheet) shall contain the following (see Appendix X2 and Appendix X3):

9.1.1 Identification of the sample (material) being tested, such as project, boring number, sample number, test number, container number, etc.,

9.1.2 Sample depth in meters (feet) below ground surface or elevation in meters (feet) (if applicable),

9.1.3 Classification of soil by Practice D2487, if determined, or visual classification of soil (group name and symbol) as determined by Practice D2488,

9.1.4 Moist/total and dry density (unit weight), to four significant digits,

9.1.5 Water content (in percent), to four significant digits,

9.1.6 Method used (A or B), and

9.1.7 Whether the specimen was intact, disturbed, remolded, or reconstituted (compacted).

10. Precision and Bias

10.1 *Precision*—The precision of the procedure in this test method for measuring the density (unit weight) of cohesive soil specimens is being determined. In addition, Subcommittee D18.03 is seeking pertinent data from users of the test method.

10.2 *Bias*—Since there is not an accepted reference material suitable for measuring the bias for this procedure, a statement on bias cannot be made.

Copyright by ASTM Int'l (all rights reserved); Mon Oct 21 12:27:08 EDT 2013
Downloaded/printed by
Martin Burford (Becc Inc) pursuant to License Agreement. No further reproductions authorized.

11. Keywords

11.1 density; porosity; saturation; specimen; unit weight; void ratio

APPENDIXES

(Nonmandatory Information)

X1. RELATIONSHIPS AMONG SOIL PHASES; POROSITY, VOID RATIO, & SATURATION USING METRIC UNITS

X1.1 Let:

n = porosity, %,
e = void ratio,
S = saturation, %,
V = volume of soil specimen, cm^3,
V_v = volume of voids in soil specimen, cm^3,
V_s = volume of solids in soil specimen, cm^3,
w = water content of soil specimen, %,
G_s = specific gravity of soil solids in soil specimen as determined by Test Methods D854,
ρ_d = dry density of soil specimen, Mg/m^3, and
M_d = dry mass of soil in soil specimen, g.

X1.2 Then:

$$n = \frac{V_v}{V} \times 100 = \frac{V - V_s}{V} \times 100 = \frac{V - \frac{M_d}{G_s}}{V} \times 100 = \frac{e}{1+e} \times 100 \quad \text{(X1.1)}$$

$$e = \frac{V_v}{V_s} = \frac{V - V_s}{V_s} = \frac{V - \frac{M_d}{G_s}}{\frac{M_d}{G_s}} = \frac{n}{100 - n} = \frac{G_s w}{S} \quad \text{(X1.2)}$$

$$S = \frac{w G_s \rho_d}{G_s - \rho_d} = \frac{G_s w}{e} \quad \text{(X1.3)}$$

Copyright by ASTM Int'l (all rights reserved); Mon Oct 21 12:27:08 EDT 2013
Downloaded/printed by
Martin Burford (Becc Inc) pursuant to License Agreement. No further reproductions authorized.

X2. EXAMPLE DATA SHEET DISPLACEMENT METHOD—A

UNIT WEIGHTS, VOID RATIO, POROSITY, AND DEGREE OF SATURATION
(DISPLACEMENT METHOD—A)

NAME _____ DATE _____ JOB NO. _____

LOCATION _____

BORING NO. _____ SAMPLE NO. _____ DEPTH/ELEV. _____

DESCRIPTION OF SAMPLE _____

WATER CONTENT						
SAMPLE OR SPECIMEN NO.						
TARE NO.						
MASS IN GRAMS	TARE PLUS WET SOIL					
	TARE PLUS DRY SOIL					
	WATER	M_w				
	TARE					
	DRY SOIL	M_d				
WATER CONTENT		w	%	%	%	%

WEIGHT-VOLUME RELATIONS						
SAMPLE OR SPECIMEN NO.						
TEST TEMPERATURE OF WATER, T, °C						
MASS IN GRAMS	SOIL AND WAX IN AIR					
	WET SOIL	M_t				
	WAX					
	WET SOIL AND WAX IN WATER					
	DRY SOIL[A]	M_d				
SPECIFIC GRAVITY OF SOIL		G_s				
VOLUME IN CC	WET SOIL AND WAX[B]					
	WAX					
	WET SOIL	V				
	DRY SOIL M_d/G_s	V_s				
LBS PER CU FT	WET UNIT WEIGHT $(M_t/V)\times 62.4$	γ_m				
	DRY UNIT WEIGHT $(M_d/V)\times 62.4$	γ_d				
VOID RATIO $(V-V_s)/V_s$		e				
POROSITY,% $[(V-V_s)/V]\times 100$		n	%	%	%	%
DEGREE OF SATURATION $[V_w/(V-V_s)]\times 100$		S	%	%	%	%

VOLUME OF WAX = WEIGHT OF WAX / SPECIFIC GRAVITY OF WAX = _____
VOLUME OF WATER = $V_w = M_w$ / SPECIFIC GRAVITY OF WATER[C]

[A] IF NOT MEASURED DIRECTLY, MAY BE COMPUTED AS FOLLOWS: $M_d = M_t/(1+0.01w)$

[B] VOLUME OF WET SOIL AND WAX $\dfrac{(\text{WT OF WET SOIL \& WAX IN AIR})-(\text{WT OF WET SOIL \& WAX IN WATER})}{\text{DENSITY OF WATER AT TEST TEMPERATURE}}$

[C] SPECIFIC GRAVITY OF WATER IN METRIC SYSTEM = 1 (APPROX)

REMARKS _____ COMPUTED BY _____ CHECKED BY _____

Copyright by ASTM Int'l (all rights reserved); Mon Oct 21 12:27:08 EDT 2013
Downloaded/printed by
Martin Burford (Becc Inc) pursuant to License Agreement. No further reproductions authorized.

X3. EXAMPLE DATA SHEET VOLUMETRIC METHOD—B

UNIT WEIGHTS, VOID RATIO, POROSITY, AND DEGREE OF SATURATION
(VOLUMETRIC METHOD—B)

NAME _____ DATE _____ JOB NO. _____

LOCATION _____

BORING NO. _____ SAMPLE NO. _____ DEPTH/ELEV. _____

DESCRIPTION OF SAMPLE _____

WATER CONTENT						
SAMPLE OR SPECIMEN NO.						
TARE NO.						
MASS IN GRAMS	TARE PLUS WET SOIL					
	TARE PLUS DRY SOIL					
	WATER	M_w				
	TARE					
	DRY SOIL	M_d				
WATER CONTENT		w	%	%	%	%
WEIGHT-VOLUME RELATIONS						
SAMPLE OR SPECIMEN NO.						
CYLINDER NO.						
CENTIMETERS	HEIGHT OF CYLINDER	H				
	INSIDE DIAMETER OF CYLINDER	D				
MASS IN GRAMS	WET SOIL AND TARE					
	TARE					
	WET SOIL	M_t				
	DRY SOIL[A]	M_d				
SPECIFIC GRAVITY OF SOIL		G_s				
VOLUME IN CC	WET SOIL (VOLUME OF CYLINDER)					
	DRY SOIL M_d/G_s	V_s				
LBS PER CU FT	WET UNIT WEIGHT $(M_t/V)\times 62.4$	γ_m				
	DRY UNIT WEIGHT $(M_d/V)\times 62.4$	γ_d				
VOID RATIO $(V-V_s)/V_s$		e				
POROSITY,% $[(V-V_s)/V]\times 100$		n	%	%	%	%
DEGREE OF SATURATION $[V_w/(V-V_s)]\times 100$		S	%	%	%	%

VOLUME OF CYLINDER, $V = (\pi D^2 H) / 4$
VOLUME OF WATER = $V_w = M_w$ / SPECIFIC GRAVITY OF WATER[B]

[A] IF NOT MEASURED ON ENTIRE SPECIMEN, MAY BE COMPUTED AS FOLLOWS: $M_d = M_t/(1+0.01w)$

[B] SPECIFIC GRAVITY OF WATER IN METRIC SYSTEM = 1 (APPROX)

REMARKS _____ COMPUTED BY _____ CHECKED BY _____

ASTM International takes no position respecting the validity of any patent rights asserted in connection with any item mentioned in this standard. Users of this standard are expressly advised that determination of the validity of any such patent rights, and the risk of infringement of such rights, are entirely their own responsibility.

This standard is subject to revision at any time by the responsible technical committee and must be reviewed every five years and if not revised, either reapproved or withdrawn. Your comments are invited either for revision of this standard or for additional standards and should be addressed to ASTM International Headquarters. Your comments will receive careful consideration at a meeting of the responsible technical committee, which you may attend. If you feel that your comments have not received a fair hearing you should make your views known to the ASTM Committee on Standards, at the address shown below.

This standard is copyrighted by ASTM International, 100 Barr Harbor Drive, PO Box C700, West Conshohocken, PA 19428-2959, United States. Individual reprints (single or multiple copies) of this standard may be obtained by contacting ASTM at the above address or at 610-832-9585 (phone), 610-832-9555 (fax), or service@astm.org (e-mail); or through the ASTM website (www.astm.org). Permission rights to photocopy the standard may also be secured from the ASTM website (www.astm.org/COPYRIGHT/).

Copyright by ASTM Int'l (all rights reserved); Mon Oct 21 12:27:08 EDT 2013
Downloaded/printed by
Martin Burford (Becc Inc) pursuant to License Agreement. No further reproductions authorized.

Appendix F
Quality Control Plan Forms

Change Request Form

Sponsor Name		**Change #**	
Project Name		**Date Submitted**	
Requested By		**Date Reply Due**	

Description of Change:

Justification:

Effect on Schedule, Deliverables, and Project Cost				
No.	Deliverable / Item	Revised End Date	Net Change, Hours Increase or (Decrease)	Net Change, Cost Increase or (Decrease)
	Totals			
	Revised Project End Date			

Project Manager Approval:

Signature Title Date

Comments:

DAILY PROGRESS REPORT

Site 8 Sediment Stabilization Pilot Test
NCBC Gulfport
Gulfport, Mississippi

Contractor:

Date: _____
Day: _____

WEATHER _____
TEMP _____
WIND _____
HUMIDITY _____

FIELD FORCE	
Subcontractors On Site	Equipment/Material Received On Site

VISITORS

TIME	NAME	REPRESENTING	REMARKS

Equipment in use

Construction Activities

Defective/Unsatisfactory Work Items

By: Title:

Site Name

INSPECTION LOG

ACTIVITY: Clearing Grubbing Excavating Mixing/Screening Stabilization

DATE:_____

DESCRIPTION: Plan / Figure / Description

WEATHER: _____
TEMP: _____
WIND: _____
HUMIDITY: _____

CONTRACTOR'S WORK FORCE (indicate classifications, include Subcontractor personnel)

MATERIALS OR EQUIPMENT DELIVERED

NON-CONFORMING ITEMS (Describe reason for non-conformance) Issue Memo

DISCREPANT ITEMS (Describe reason for discrepancy)

IS DISCREPANT ITEM FIXED DURING WORK SHIFT (Explain) If no record on punch list

FOLLOWUP INSPECTIONS OF PREVIOUSLY REPORTED DEFICIENCIES

ITEM REJECTED: _____

ACCEPTED BY:

_____
INSPECTOR

_____
ORGANIZATION / TITLE

Site 8 Sediment Stabilization Pilot Test
NCBC Gulfport
Gulfport, Mississippi

SUBMITTAL FORM

Contractor:

DATE: _____

Submittal No.

DRAWINGS or PLAN No.	DRAWING OR PLAN CHANGES			COST-ITEM		PREPARED BY AND DATE	CHECKED BY AND DATE
	YES		NO	YES	NO		

REASON FOR CHANGE REQUEST

EXISTING CONDITION

DESCRIPTION OF CHANGE AND COST

REMARKS

Page: _____ of _____

Site 8 Sediment Stabilization Pilot Test
NCBC Gulfport
Gulfport, Mississippi

CONTRACTOR SUBMITTAL LOG

Contractor:

DATE RECEIVED	TRANS. NO.	DESCRIPTION	SUBCONTRACTOR	NO. COPIES REC'D	ACTION				DATE RET'D	NO. COPIES RET'D	REVIEWED BY	REMARKS
					APPROVED	APPROVED AS NOTED	REVISE & RESUBMIT	REJECTED				