N60201.AR.002562
NS MAYPORT
5090.3a

RESULTS OF CLOSURE PLAN IMPLEMENTATION NEUTRALIZATION BASIN NS MAYPORT FL

6/8/1989

E C JORDAN

5097-05

E.C.JORDAN ENGINEERS & SCIENTISTS

2571 Executive Center Circle East
Suite 100
Tallahassee, Florida 32301-5001
(904)-656-1293

5097-03

June 8, 1989

Commanding Officer
ATTN: Mr. Greg Benjock (Code: 11423)
Southern Division
Naval Facilities Engineering Command
2155 Eagle Drive
Charleston, South Carolina 29411-0068

**SUBJECT: Results of Closure Plan Implementation
Neutralization Basin, U.S. Naval Station
Mayport, Florida
Contract N62467-86-D-0174**

Dear Mr. Benjock:

On 10 and 11 May 1989 personnel from E.C. Jordan Co. and GKN Hayward Baker, Inc. (slant drilling subcontractor) implemented the soil sampling program for clean closure at the subject site. During this time, no water or bottom sediments were present in either of the two basin cells. Hence, neither surface water nor sediment samples could be collected for laboratory analysis.

The following is a discussion of the procedure and laboratory results of this sampling episode.

PROCEDURE

In accordance with Addendum A to the Closure Plan for the Neutralization Basin at Building 1241, a slant drilling exploration program was undertaken for the purpose of obtaining soil samples for laboratory analysis. Slant borings were advanced under each neutralization basin cell with an Atlas CAPCO Model 601 drilling rig. The angle of boring was 25 degrees from the horizontal which paralleled the side slope of the neutralization basin. At both boring locations, soil samples were collected at the 2.5 to 3.25 foot and 3.75 to 4.5 foot interval below the bottom of basin. The horizontal position of the samples was approximately 16 to 18 feet and 21.5 to 23.5 feet from the east edge of the neutralization basin.

what about the west edge?

Borings were advanced using an air rotary bit while pneumatically advancing a 3.5 inch O.D. casing behind the bit. When the desired sampling location was reached, the bit was removed and a split-spoon sampler installed. Soil

samples were obtained with a split-spoon sampler which was pneumatically advanced. The split-spoon sampler was decontaminated between samples in accordance with Jordan's Site-Specific Quality Assurance project Plan No. 880007C as approved by the Florida Department of Environmental Regulation on 30 August 1988. In addition, prior to each boring, all downhole equipment was steam cleaned. Upon completion of each boring, the bore holes were grouted to the surface with a neat cement.

Soil samples from the split-spoon sampler were placed in appropriate wide-mouth jars and cooled with ice until shipment to the laboratory. On 11 May 1989 the four soil samples were shipped to Pioneer Laboratory, Inc., Pensacola, Florida for the analysis of pH and toxic metals using the Environmental Protection Agency's (EPA) EP toxicity metals extraction procedure.

RESULTS

Both soil samples collected at the 2-foot interval consisted of a green clay. The two samples collected at the 4-foot interval were a tan-to-brown fine sand with shells.

The laboratory report for the four soil samples ~~is attached~~. Boring B-1 was advanced under the south cell of the neutralization basin while boring B-2 was advanced under the north cell. Sample results labeled S-1 were obtained at the 2.5- to 3.25-foot interval below the base of the neutralization basin. Soil samples labeled S-2 were obtained from the 3.75- to 4.5-foot interval below the basin.

As noted in the laboratory report, the results of the EP toxicity-metals analysis were all below method detection limits for all four samples. The value of soil pH ranged from 8.18 in sample B-1 S-1 to 9.16 in sample B-2 S-2. Based upon the limited analytical results, it would appear that a lower pH exists in the soils at the 2-foot interval than at the 4-foot interval. The pH results are consistent with the sodic soils as found in this area and do not warrant concern.

RECOMMENDATION

Based upon the results of the laboratory analysis of the four soil samples, it is recommended that a clean closure be finalized with the Florida Department of Environmental Regulation. This recommendation is also supported by the results from the first quarter sampling and analysis of the two in-place groundwater monitoring wells.

E.C. JORDAN CO. ENGINEERS & SCIENTISTS

It has been the pleasure of the E.C. Jordan Co. in assisting you with the closure plan. If you should have any questions or comments on the material presented in this letter report, please do not hesitate to contact either myself or Mr. R. Michael Nugent, Ph.D., at (904) 656-1293 in Tallahassee, Florida.

Sincerely,

E.C. Jordan Co.

Myron L. Hayden

Myron L. Hayden, Ph.D., P.E.
Engineer-of-Record
Florida Registration No. 34067

cc: Mr. Michael Davenport, U.S. Naval Station, Mayport, Florida (w/enclosure)

Mr. R. Michael Nugent, E.C. Jordan Co., Tallahassee, Florida

Seal

June 8, 1989
Date

Pioneer
PLI LABORATORY, INC.
11 EAST OLIVE ROAD PENSACOLA, FLORIDA 32514
PHONE (904) 474-1001

Client:	E.C.JORDAN	Lab I.D.#:	89-1671
10001	2571 EXECUTIVE CENTER CIR	Order Number:	P20118
	SUITE 100	Order Date:	05/12/89
	TALLAHASSEE FL 32301-5001	Sampled By:	KEVIN WARNER
		Sample Date:	05/10-11
		Sample Time:	VARIOUS

Project Number: 5097-05
Project Name: NAVAL STATION - MAYPORT
Sample Site: BLDG 1241 NEUTRALIZATION BASIN
Sample Type: SOIL

N/S = Not Submitted

R E S U L T S

reported on the following page(s)

Comments: PPM = Parts Per Million, mg/l. BDL = Below Detection Limits.
Method Reference: SW-846, 3rd Edition, November 1986.

Approved By : W. F. Bowen

CERTIFICATION NUMBERS: FL LAB ID # 81142 • EPA # FL094 • FDER # EL020 • AL LAB ID # 40150 • NIOSH # 32514-001 • FL ENV # E81010

Pioneer LABORATORY, INC.
11 EAST OLIVE ROAD PENSACOLA, FLORIDA 32514
PHONE (904) 474-1001

Client: E.C.JORDAN
10001

Sample Site: BLDG 1241 NEUTRALIZATION BASIN
Sample Type: SOIL

Lab I.D.#: 89-1671
Order Date: 05/12/89
Sampled By: KEVIN WARNER
Sample Date: 05/10-11
Sample Time: VARIOUS

Parameter	Units	B-1 S-1 89-1671-1	B-1 S-2 89-1671-2	B-2 S-1 89-1671-3	B-2 S-2 89-1671-4	Detection Limit
PH	UNIT	8.18	8.87	8.64	9.16	

CERTIFICATION NUMBERS: FL LAB ID # 81142 • EPA # FL094 • FDER # EL020 • AL LAB ID # 40150 • NIOSH # 32514-001 • FL ENV # E81010

Pioneer LABORATORY, INC.
11 EAST OLIVE ROAD PENSACOLA, FLORIDA 32514
PHONE (904) 474-1001

Client: E.C.JORDAN
10001

Sample Site: BLDG 1241 NEUTRALIZATION BASIN
Sample Type: SOIL

Lab I.D.#: 89-1671
Order Date: 05/12/89
Sampled By: KEVIN WARNER
Sample Date: 05/10-11
Sample Time: VARIOUS

EPTOX/METALS

EP TOXICITY-METALS ANALYSIS

Parameter	Units	B-1 S-1 89-1671-1	B-1 S-2 89-1671-2	B-2 S-1 89-1671-3	B-2 S-2 89-1671-4	Detection Limit
SILVER,EPTOX	PPM	BDL	BDL	BDL	BDL	0.50
ARSENIC,EPTOX	PPM	BDL	BDL	BDL	BDL	0.50
BARIUM,EPTOX	PPM	BDL	BDL	BDL	BDL	1.0
CADIUM,EPTOX	PPM	BDL	BDL	BDL	BDL	0.10
CHROMIUM,EPTOX	PPM	BDL	BDL	BDL	BDL	0.50
MERCURY,EPTOX	PPM	BDL	BDL	BDL	BDL	0.01
LEAD,EPTOX	PPM	BDL	BDL	BDL	BDL	0.50
SELENIUM,EPTOX	PPM	BDL	BDL	BDL	BDL	0.20

end of report

CERTIFICATION NUMBERS: FL LAB ID # 81142 • EPA # FL094 • FDER # EL020 • AL LAB ID # 40150 • NIOSH # 32514-001 • FL ENV # E81010

Pioneer LABORATORY, INC.

11 EAST OLIVE ROAD PENSACOLA, FLORIDA 32514
PHONE (904) 474-1001

SAMPLE INSPECTION AND IDENTIFICATION SHEET

Client: E. C. Jordan

Method of Shipment: Federal Express

Bill of Lading/Air Bill # 1163859365

Date Received: 5-12-89

Sample Type: Soil

Pioneer Lab I.D.# 89-1071

Sample 1	B1S-1	11		21	
2	B1S-2	12		22	
3	B2S-1	13		23	
4	B2S-2	14		24	
5		15		25	
6		16		26	
7		17		27	
8		18		28	
9		19		29	
10		20		30	

Is there a chain of custody?	(Y)	N
Is it a Pioneer Lab chain of custody?	Y	(N)
Is the chain of custody signed?	(Y)	N
Is chain of custody complete?	(Y)	N
Are sample tags present?	(Y)	N
Do sample tags and chain of custody agree?	(Y)	N
Were samples received cold?	(Y)	N
Were any containers broken or leaking?	Y	(N)
Were samples received within holding time?	(Y)	N
Were all samples preserved correctly?	(Y)	N

Extra Information From Bottles

Project Number:

Sampled By:

Sample Site:

Sample Date:

Sample Time:

Sample Type:

Special Instructions

Special turnaround time? _____ Q.C. Level 1 2 3 4 (N)

Bottle Order? (Y) N Purchase Order #: _____

Task Order # _____

- - - - - LIMIT OF LIABILITY - - - - -

PLI WILL PERFORM THE SERVICES IN ACCORDANCE WITH NORMAL PROFESSIONAL STANDARDS FOR THE INDUSTRY. THE TOTAL LIABILITY OF PLI, ITS OFFICERS, AGENTS, EMPLOYEES OR SUCCESSORS, TO CLIENTS, ARISING OUT OF OR IN CONNECTION WITH THE SERVICES TO BE PROVIDED HEREIN, SHALL NOT EXCEED THE INVOICE AMOUNT FOR SAID SERVICES. CLIENT ACCEPTANCE OF A PROPOSAL RELEASES PLI FROM ANY LIABILITY IN EXCESS THEREOF, NOT WITHSTANDING ANY PROVISION TO THE CONTRARY IN ANY CLIENT PURCHASE ORDER OR CONTRACT.

CLIENT NOTIFIED YES ( ) NO (✓)
DATE/TIME:

NOTES: NO QC per John H.

INSPECTED BY: M. Mona Pepe / Pioneer Lab

DATE INSPECTED: 5-12-89

CERTIFICATION NUMBERS: FL LAB ID # 81142 • EPA # FL094 • FDER # EL020 • AL LAB ID # 40150 • NIOSH # 32514-001 • FL ENV # E81010

89-1671

CHAIN OF CUSTODY RECORD

PROJECT NO.: 5097-05

PROJECT NAME: NAVAL STATION ~~PA~~ MAYPORT BLDG 1241 NEUTRILIZATION BASIN

SAMPLERS (SIGNATURE):

	STA. NO.	DATE	TIME	COMP.	GRAB	STATION LOCATION	NO. OF CONTAINERS	PH	EPTOX/METALS										REMARKS (INDICATE SOIL/WATER/AIR SEDIMENT/SLUDGE)
1-	B-1 S-1	5/10/89	15:30			BENEATH NEUTRILIZATION BASIN	1	✓	✓										
2-	B-1 S-2	5/10/89	16:20			"	1	✓	✓										
3-	B-2 S-1	5/11/89	7:20			"	1	✓	✓										
4-	B-2 S-2	5/11/89	8:00			"	1	✓	✓										

RELINQUISHED BY: (SIGNATURE)	DATE / TIME	RECEIVED BY: (SIGNATURE)	RELINQUISHED BY: (SIGNATURE)	DATE / TIME	RECEIVED BY: (SIGNATURE)
Kevin Warren	5/11/89 16:30	[illegible]	[illegible]		
RELINQUISHED BY: (SIGNATURE)	DATE / TIME	RECEIVED BY: (SIGNATURE)	RELINQUISHED BY: (SIGNATURE)	DATE / TIME	RECEIVED BY: (SIGNATURE)
		5/12/89 1050			
RELINQUISHED BY: (SIGNATURE)	DATE / TIME	RECEIVED FOR DISPOSAL BY: (SIGNATURE)	DATE / TIME	REMARKS	

E.C. JORDAN CO.

CLOSURE PLAN
NEUTRALIZATION BASIN AT BLDG. 1241

EPA ID NO. FL9170024260

U.S NAVAL STATION - MAYPORT
MAYPORT, FLORIDA

Prepared for:

SOUTHERN DIVISION
NAVAL FACILITIES ENGINEERING COMMAND
CHARLESTON, SOUTH CAROLINA
Contract No. N62467-86-C-0174

Prepared by:

E.C. JORDAN CO., ENGINEERS AND SCIENTISTS
2571 EXECUTIVE CENTER CIRCLE EAST, SUITE 100
TALLAHASSEE, FLORIDA 32301-5001

Project No. 5097-05
R. Michael Nugent, Ph.D. - Project Manager
Myron L. Hayden, Ph.D., P.E. - Engineer of Record

December 1988

Professional Engineer's Certification

This is to certify the engineering features presented in this Closure Plan have been designed by me or under my supervision and found to conform to acceptable engineering principles and practices. In my professional judgement, this Facility, when properly closed, will comply with all applicable Statues of the State of Florida and rules of the Department of Environmental Regulation.

Signature: Myron L. Hayden

Date: December 9, 1988

Myron L. Hayden, Ph.D., P.E.
Manager, Engineering and Remedial Services
2571 Executive Center Circle Drive
Tallahassee, Florida 32301-5001
(904) 656-1293

Florida Registration Number: PE 34067

Seal

5097MP07.TXT
F03.11.88

Owner/Operator Certification

This is to certify that I understand the Closure Plan as submitted for the purpose of closing the Neutralization Basin on the property described. I have examined and am familiar with the information presented in this document and all attachments. I believe the information contained in this document is true, accurate and complete. Further, I agree to comply with the provisions of Chapter 403, Florida State Statutes, and the rules and regulations of the Florida Department of Environmental Regulation.

Signature: _____

Date: _____

Captain J. B. Mitchell, Jr., USN
U.S. Naval Station - Mayport
Old Mayport Road
Mayport, Florida 32228
(904) 246-5201

CLOSURE PLAN
NEUTRALIZATION BASIN AT BLDG. 1241
NAVAL STATION - MAYPORT
MAYPORT, FLORIDA

INTRODUCTION

This Closure Plan has been prepared to comply with a Consent Order issued by the Florida Department of Environmental Regulation (FDER), with the provisions of Florida Administrative Code Rule 17-30.260, and with 40 CRF 264 and 265 Subpart G for the Neutralization Basin located at the boiler plant, Building 1241, Mayport Naval Station. During a facility inspection, by FDER personnel on February 23, 1987, the Neutralization Basin was designated as receiving D002 corrosive waste, as defined by 40 CFR 261.22 under the Resource Conservation and Recovery Act (RCRA).

A Notice of Violation was issued to the Naval Station at Mayport by FDER requiring the preparation and submittal of a Groundwater Monitoring and Closure Plan for the Neutralization Basin. The Groundwater Monitoring Plan has been prepared for the Neutralization Basin and is part of the Closure Plan. Pertinent information on the site has been included as Appendix A.

SITE DESCRIPTION

The Neutralization Basin is located on the north side of Mayport Naval Station, adjacent to the St. Johns River next to Building No. 1241. A map of the Naval Station is shown in Figure 1. Details of the site are shown in Figure 2. The Basin is located to the north of the boiler plant (Building 1241) and is used to receive and temporarily store treated water from the anion/cation exchange process used in the boiler plant. Effluent from the basin is conveyed to the sanitary sewer system for Mayport Naval Station through a manhole adjacent to the basin.

Mayport Naval Station is a secure facility with guarded access on a 24-hour basis.

CONSTRUCTION DETAILS

The current Neutralization Basin was constructed in late 1986 at the location of a previous Neutralization Basin which was constructed in 1970. The previous basin was put into operation in February 1971 and was used continuously until the current basin was constructed.

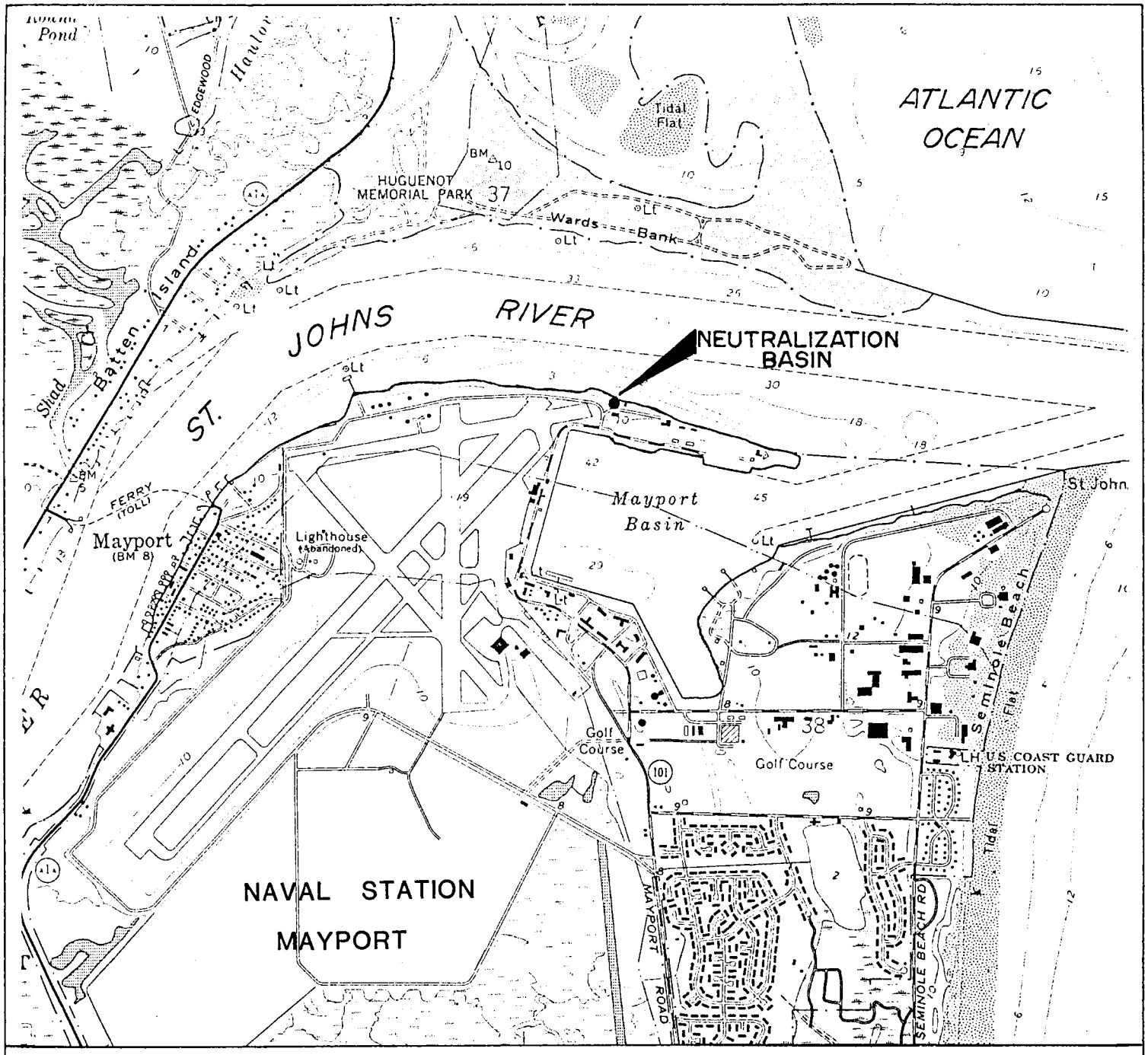

N

SCALE IN FEET

0 2000 4000

E.C.JORDAN CO. ENGINEERS & SCIENTISTS	NAVAL STATION MAP
U.S. DEPARTMENT OF THE NAVY	CLOSURE PLAN
U.S. NAVAL STATION MAYPORT, FLORIDA	5097-05 FIGURE 1

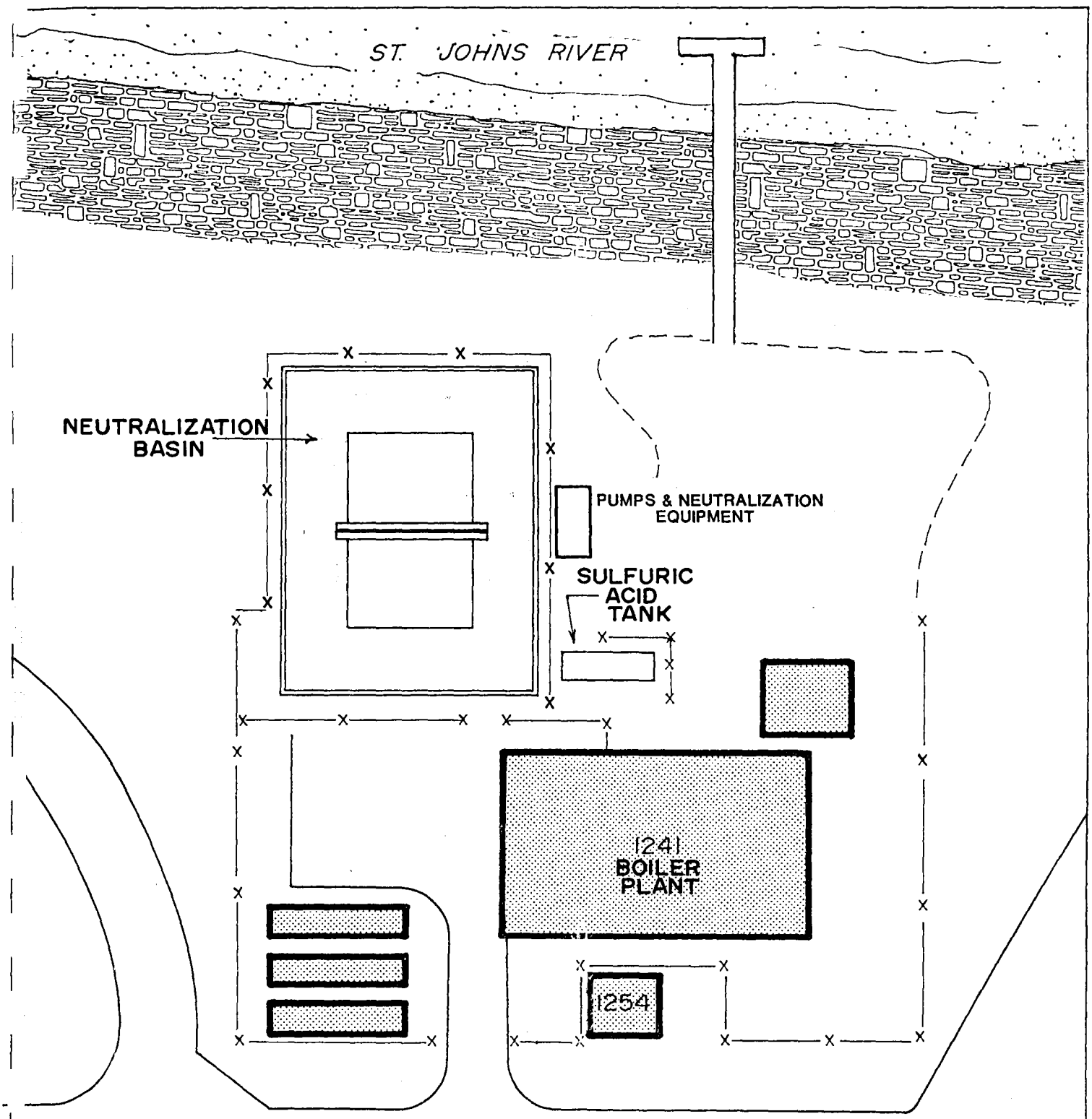

NOT TO SCALE

E.C.JORDAN CO. ENGINEERS & SCIENTISTS	NEUTRALIZATION BASIN SITE DETAILS
U.S. DEPARTMENT OF THE NAVY	CLOSURE PLAN
U.S. NAVAL STATION MAYPORT, FLORIDA	5097-05 FIGURE 2

The current Neutralization Basin is 59 feet wide and 78 feet long, divided into two cells. Total depth is 6 feet. There is a 6-foot chain link fence around the perimeter of the basin site.

Previous Neutralization Basin

The previous Neutralization Basin was constructed using a synthetic liner over an asphalt base. Based on discussions with naval personnel, the liner and asphalt were in good condition until 1985 when hurricane winds damaged the liner.

Topographical data and dimensions based on construction records of the previous basin are shown in Figure 3. A cross section of the basin with pertinent construction details is shown in Figure 4. The previous basin had a safe storage capacity of 76,000 gallons assuming a minimum freeboard of 1 1/2 feet.

Existing Neutralization Basin

Construction of the existing Neutralization Basin was completed in late 1986 and was put into operation in January 1987. During construction the design was changed from using an asphalt base material to concrete.

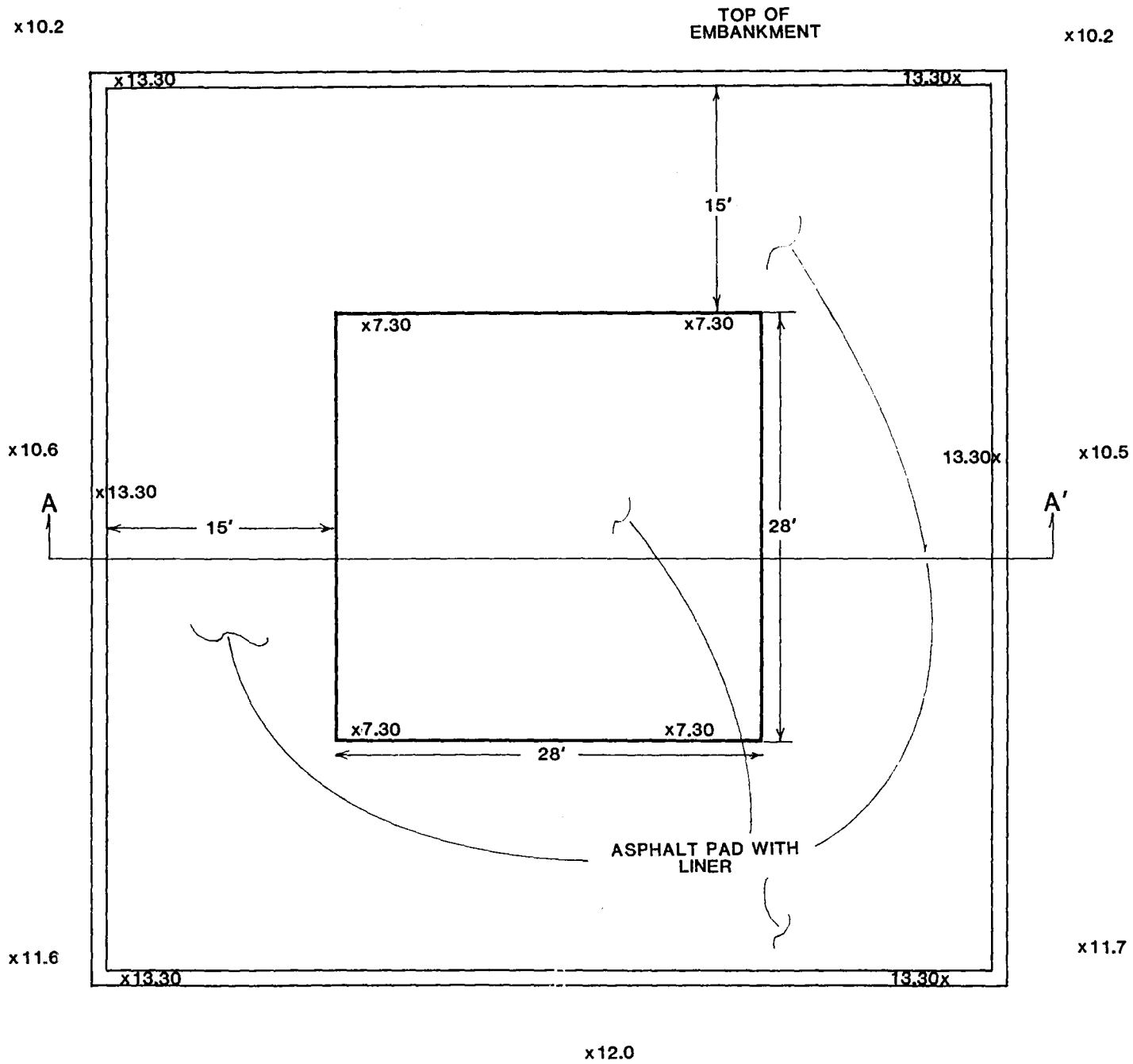

NOTES:

ELEVATIONS AND DIMENSIONS BASED ON AS BUILT CONSTRUCTION DOCUMENTS

ELEVATIONS ARE MSL

E.C.JORDAN CO. ENGINEERS & SCIENTISTS	PLAN VIEW OF PREVIOUS BASIN
U.S. DEPARTMENT OF THE NAVY	CLOSURE PLAN
U.S. NAVAL STATION MAYPORT, FLORIDA	5097-05 FIGURE 3

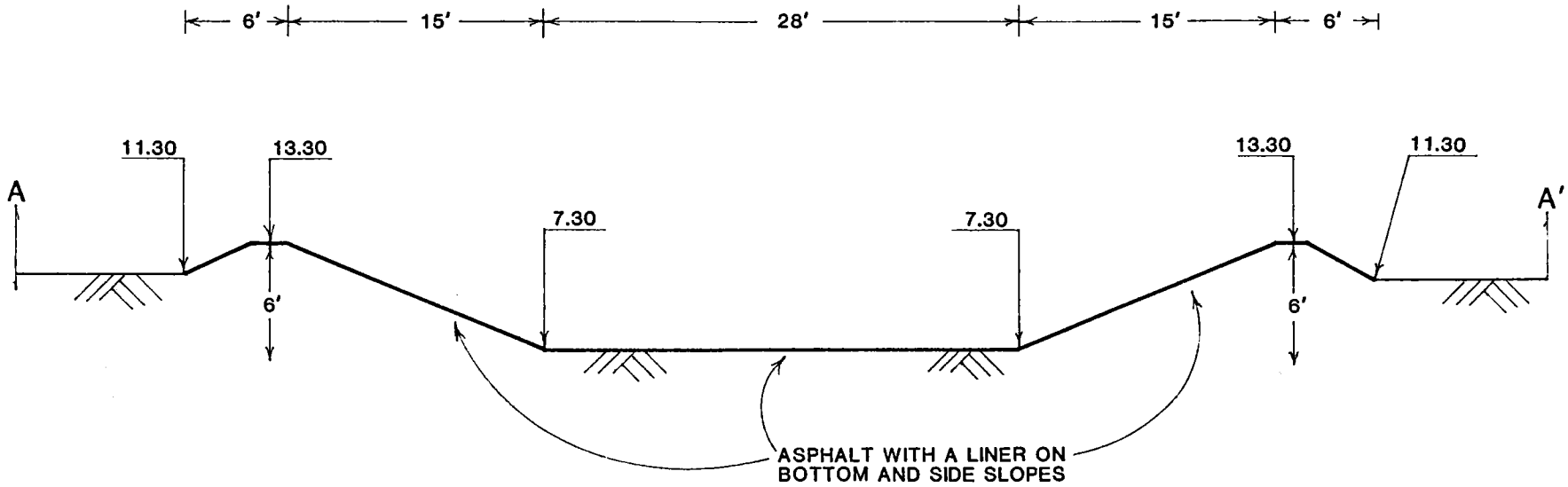

NOTES:

1. ELEVATIONS ARE MSL
2. CROSS SECTION SHOWN IN PLAN AS A-A' IN FIGURE 3
3. ELEVATIONS AND DIMENSIONS BASED ON AS BUILT CONSTRUCTION DOCUMENTS

E.C.JORDAN CO. ENGINEERS & SCIENTISTS	CROSS SECTION OF PREVIOUS BASIN
U.S. DEPARTMENT OF THE NAVY	CLOSURE PLAN
U.S. NAVAL STATION MAYPORT, FLORIDA	5097-05 FIGURE 4

Elevations and topography details are shown in Figure 5. The pertinent construction dimensions and details are shown in Figure 6. The site capacity of the basin is 112,300 gallons based on an 1 1/2 foot freeboard.

The thickness of the concrete base is 6 inches and the side slopes are 4 inches thick. The design specified 12 inches of compacted soil [95 percent of a modified proctor (ASTM 1557)], beneath the concrete base material. The basin is 59 feet wide, 78 feet long, and divided into two cells with a depth of 6 feet. A hypalon liner has been placed over the concrete base materials.

CLOSURE PLAN

The performance standards for a closed facility as outlined in 40 CFR 264 - Subpart G are:

a) minimize the need for further maintenance; and
b) control, minimize or eliminate any post-closure escape of hazardous waste constituents or leachate to the groundwaters, surface waters, or atmosphere.

It is the intent of Mayport Naval Station to terminate the use of the Neutralization Basin as a RCRA regulated facility, and

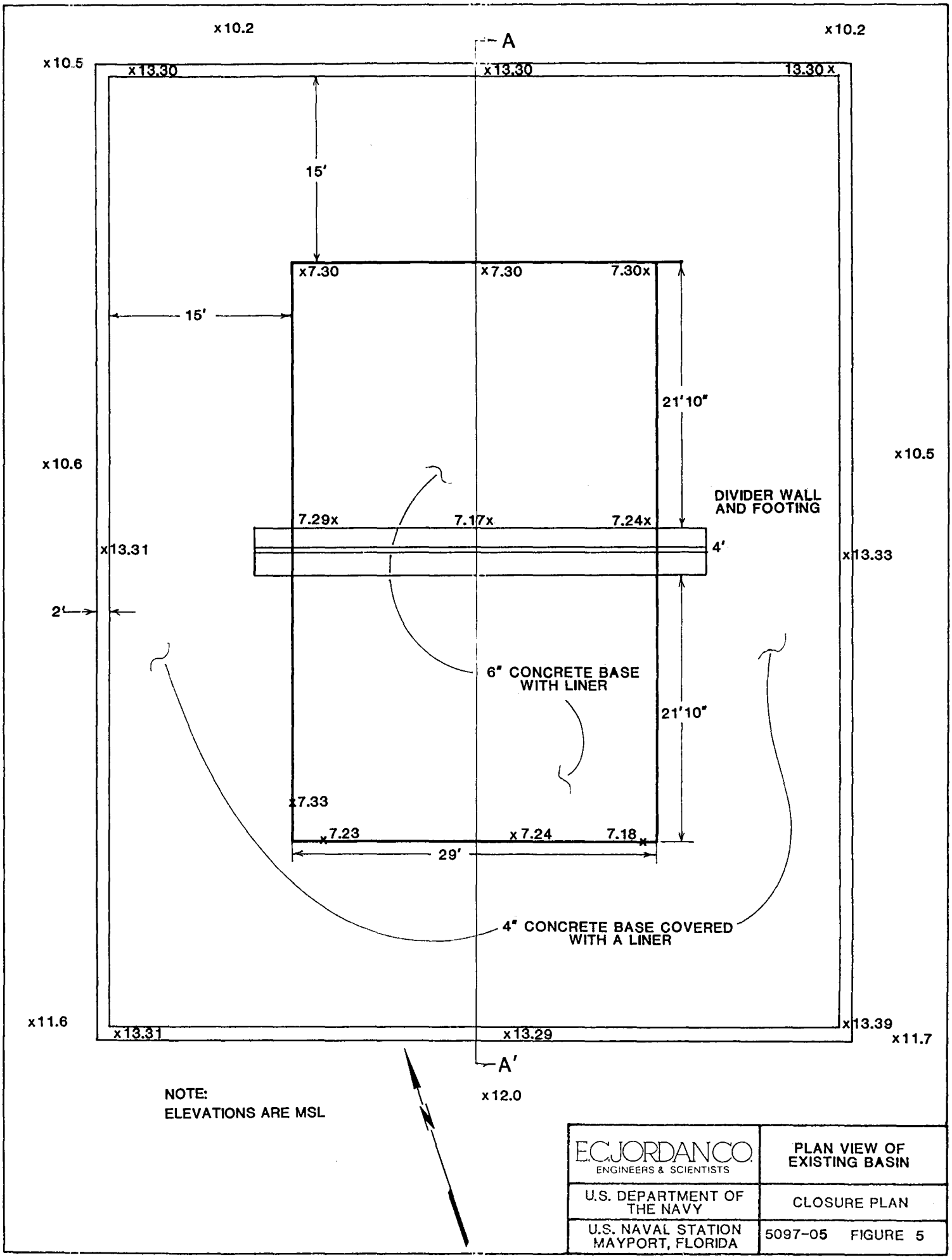
x10.2
x10.2
A
x10.5
x13.30
x13.30
13.30 x
15'
x7.30
x7.30
7.30x
15'
21'10"
x10.6
x10.5
DIVIDER WALL
AND FOOTING
7.29x
7.17x
7.24x
x13.31
4'
x13.33
2'
6" CONCRETE BASE
WITH LINER
21'10"
x7.33
x7.23
x7.24
7.18x
29'
4" CONCRETE BASE COVERED
WITH A LINER
x11.6
x13.31
x13.29
x13.39
x11.7
A'
x12.0
NOTE:
ELEVATIONS ARE MSL
E.C.JORDAN CO.
ENGINEERS & SCIENTISTS
PLAN VIEW OF
EXISTING BASIN
U.S. DEPARTMENT OF
THE NAVY
CLOSURE PLAN
U.S. NAVAL STATION
MAYPORT, FLORIDA
5097-05 FIGURE 5

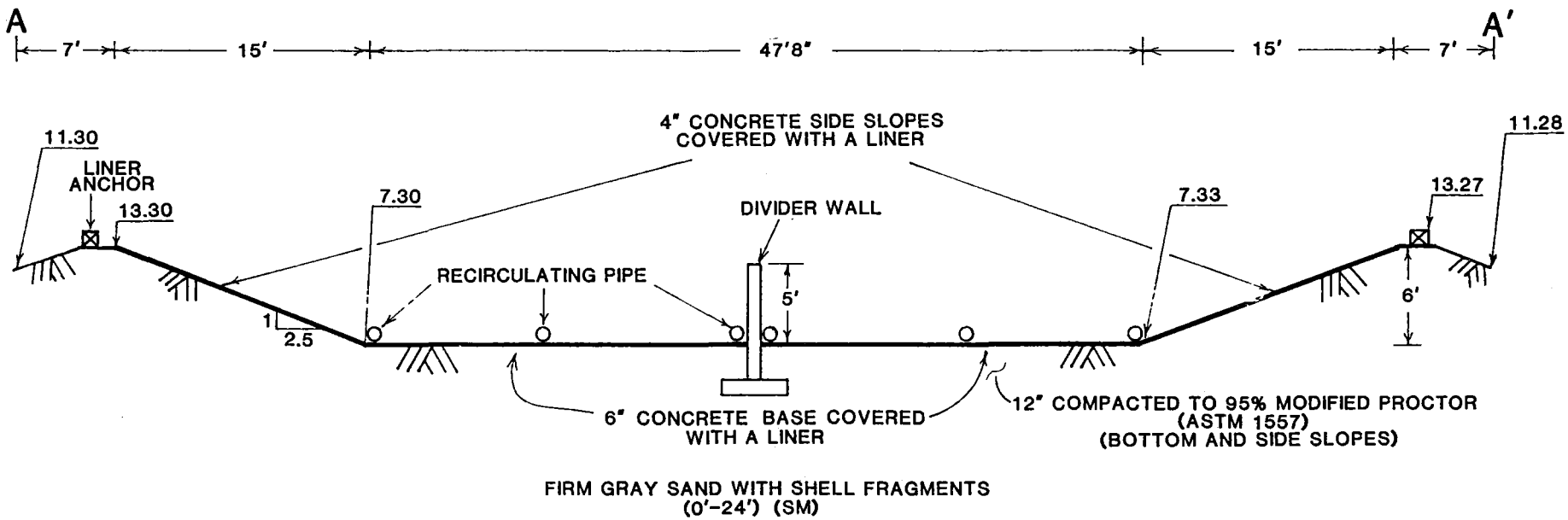

NOTES:

1. LINER IS CONTINOUS
2. DIMENSIONS REFERENCED FROM CONSTRUCTION DOCUMENTS PROVIDED BY THE NAVY.
3. SOIL DATA BASED ON BORING LOGS PROVIDED BY THE NAVY
4. CROSS SECTION SHOWN IN PLAN AS A-A' ON FIGURE 1

ELEVATIONS ARE MSL

E.C.JORDAN CO. ENGINEERS & SCIENTISTS	CROSS SECTION OF EXISTING BASIN
U.S. DEPARTMENT OF THE NAVY	CLOSURE PLAN
U.S. NAVAL STATION MAYPORT, FLORIDA	5097-05 FIGURE 6

E.C.JORDAN CO.

to convert the basin to an industrial waste treatment facility, as soon as possible.

The Neutralization Basin was designated as a hazardous waste surface impoundment for pH rather than for any specific hazardous waste constituents. There is no analytical data available to indicate whether or not contamination of the soil or groundwater exists beneath the Basin as a result of infiltration of the process water. The data to be obtained from implementation of the subsurface investigation will be used to assess the possible existence of contamination.

At the present time, the basin does not contain any material or liquids with a pH of less than 2 or greater than 12.5. When the facility is operating properly the pH of water entering the basin is approximately 4 or greater.

There are possible operational scenarios for closure of the Neutralization Basin. The primary scenario is for a clean closure with no corrosive or hazardous constituents being present in the soil or groundwater beneath the basin. The alternative scenario is for a closure with contaminated soil beneath the basin.

The determination of which scenario is applicable will depend upon the results of the groundwater monitoring program developed.

CLOSURE PROCEDURE

The following closure steps will apply to all of the scenarios considered:

a) The basin will be operational during closure; therefore, the first step in the closure will be to pump all free liquid from the north cell of the basin into the south cell, where the pH will be adjusted, and released to the sanitary sewer. The sludge in the north cell will be sampled and analyzed for pH and metals using the EPA Toxicity Extraction Procedure. Specific EPA Methods for preparation and analysis of the samples, as well as maximum concentrations for each constituent are provided in Table 1. Concentrations above the values presented in Table 1 indicate that the sludge should be treated as a hazardous waste. If the material is not hazardous, it will be removed using a suction truck and placed in the wastewater treatment facility's (WWTF) sludge drying beds for dewatering and disposal with the WWTF sludge.

After sludge removal from the north cell, all the free liquid from the south cell will be pumped into the north cell. A sludge sample will be taken from the south basin and analyzed as previously described. If the sludge is not hazardous, the sludge from the south basin will then be removed and placed in the WWTF sludge drying beds.

TABLE 1
EPA METHODS AND MAXIMUM CONCENTRATIONS FOR EP TOXICITY EXTRACTION METHOD ANALYSES[1]

CONSTITUENT	PREPARATION METHOD	ANALYTICAL METHOD	CONCENTRATION[2] MG/L
Arsenic	3020	7060	5.0
Barium	3010	6010	100.0
Cadmium	3010	6010	1.0
Chromium	3010	6010	5.0
Lead	3010	6010	5.0
Mercury	--	7470	0.2
Selenium	3020	7740	1.0
Silver	3010	6010	5.0
pH (soil)	--	946	see Note 3

Notes:

1. From EPA Manual SW-846 "Test Methods for Evaluating Solid Waste." 1986

2. From Resource Conservation and Recovery Act (RCRA) 1976.

3. A waste is considered hazardous under RCRA if its pH is less than 2.0 or greater than 12.5

If the sludge is hazardous, the same procedure of pumping the water to the south cell will be followed. The sludge will be placed in drums, properly labeled and disposed of by the Naval Station. The liquid will then be pumped from the south cell to the north cell and the same sludge removal procedure will be followed. Extreme care will be taken to prevent sludge particles from becoming suspended in the liquid during the pumping.

Equipment used for the sludge removal, if the sludge is hazardous, should consist of protective clothing, drums, and shovels. If the sludge is hazardous because of its pH, the shovels may be rinsed and the rinse water collected. The pH of the rinse water should be adjusted with either sulfuric acid or caustic soda and then released to the WWTF. If the sludge is contaminated with EPTOX metals, a detergent wash with a tap water rinse should be used. The wash and rinse water should be collected in drums and properly disposed of by the Naval Station. If equipment used is minimized, it may be cost effective to drum the shovel and clothing for disposal to avoid the generation of decontamination fluids.

b) After each cell has been cleaned, the liner will be pulled back and a hole made through the concrete and base material in the center of the cell to facilitate augering to a depth of 4 feet. The hole will be advanced vertically using a clean auger to a depth of two feet below the bottom of the basin floor. A soil sample will be taken at the 2 feet depth using a clean split-spoon sampler. The hole will then be advanced to a depth of 4 feet where a second soil sample will be taken. The equipment will be decontaminated between soil samples using procedures outlined in Appendix B. Each soil sample will be analyzed for pH and metals using the EP Toxicity Extraction Procedure and the methods provided in Table 1.

The hole made in the center of each cell will be back-filled with clean soil and compacted to form a firm base. The concrete will be patched using an expansive cement grout to provide for a water tight seal. The hypalon liner will be replaced and anchored.

c) The hypalon liner will be flushed with clean water, which will remain in the basin until testing is complete. The water will be analyzed and treated if necessary prior to disposal.

d) A closure certification will be prepared by the Engineer of Record and submitted to FDER within 60 days of the completion of the closure.

CLOSURE ALTERNATIVES

The following scenarios apply to the closure of the basins after the previously described initial actions are completed. Due to a process change being considered by the Navy, use of the basins may be discontinued and the boiler water released directly to the sanitary sewer system. Therefore, a clean closure alternative addressing this scenario has been included.

Clean Closure with Continued Use of the Neutralization Basins. If no contamination is detected in the downgradient monitoring well or subsurface soil samples, the neutralization basins will continue to be used for treatment of the boiler water prior to its release to the sanitary sewer. Process modifications were made in May 1987 and hazardous wastes (i.e., pH less than 2.0 or greater than 12.5) have since not been released to the basin.

Clean Closure with Removal of the Neutralization Basin. This alternative may be implemented in either the case of no contamination or contamination detected in the soils and/or

groundwater. The differences between the two cases is that health and safety, decontamination, and containment of contaminated soils and debris during closure activities must be considered if contamination is present.

If no contamination is detected, the piping and equipment will be disassembled and turned over to the Naval Station for salvage or disposal. The liner will then be removed and disposed of in an offsite landfill. The slab will be broken up using a backhoe-mounted hydraulic punch and loaded onto trucks for use as fill, if needed on the station, or disposal in an offsite landfill. The area will then be leveled and planted with a suitable cover crop to prevent erosion.

If contamination of soils or groundwater is detected in the initial sampling, an assessment of the extent will be conducted prior to demolition of the neutralization basins. The approach to the assessment will vary depending on the type of contamination present (EPTOX metals, pH, or a combination).

Contamination with EPTOX Metals or a Combination of EPTOX Metals and Hazardous pH. If EPTOX metals are detected, either alone or in combination with extreme pH, the contamination assessment will be conducted by drilling boreholes around and through the basin to determine the vertical extent. Samples will be collected at one foot intervals to a depth of five feet

below the bottom of the slab or until the saturated zone is reached (whichever is deeper). After sampling, the holes will be sealed to prevent further migration of contaminants. Preliminary sampling locations for this scenario are shown in Figure 7.

Upon determination of the volume of contaminated soils, an offsite solidification process will be set up. Laboratory bench testing of samples collected during the assessment will determine the most appropriate and cost-effective stabilization materials to be used. The solidification tests would involve preparing several mixtures of soils and stabilizer(s) followed by leaching tests. Once the stabilization process has been defined and approved, the soils will be excavated and transported to a FDER approved disposal site using covered trucks. At the selected disposal site, the stabilizer(s) and soil will be mixed together in a mixer or pug mill and spread along the surface of the disposal area for curing.

Contamination with Hazardous pH. If the soils are contaminated by virtue of extremely low or high pH, the slab may be removed with the debris being rinsed thoroughly. The rinse water will be collected and stored temporarily in water tight containers. The pH of the rinse water will be tested and adjusted as necessary prior to disposal into the sanitary sewer.

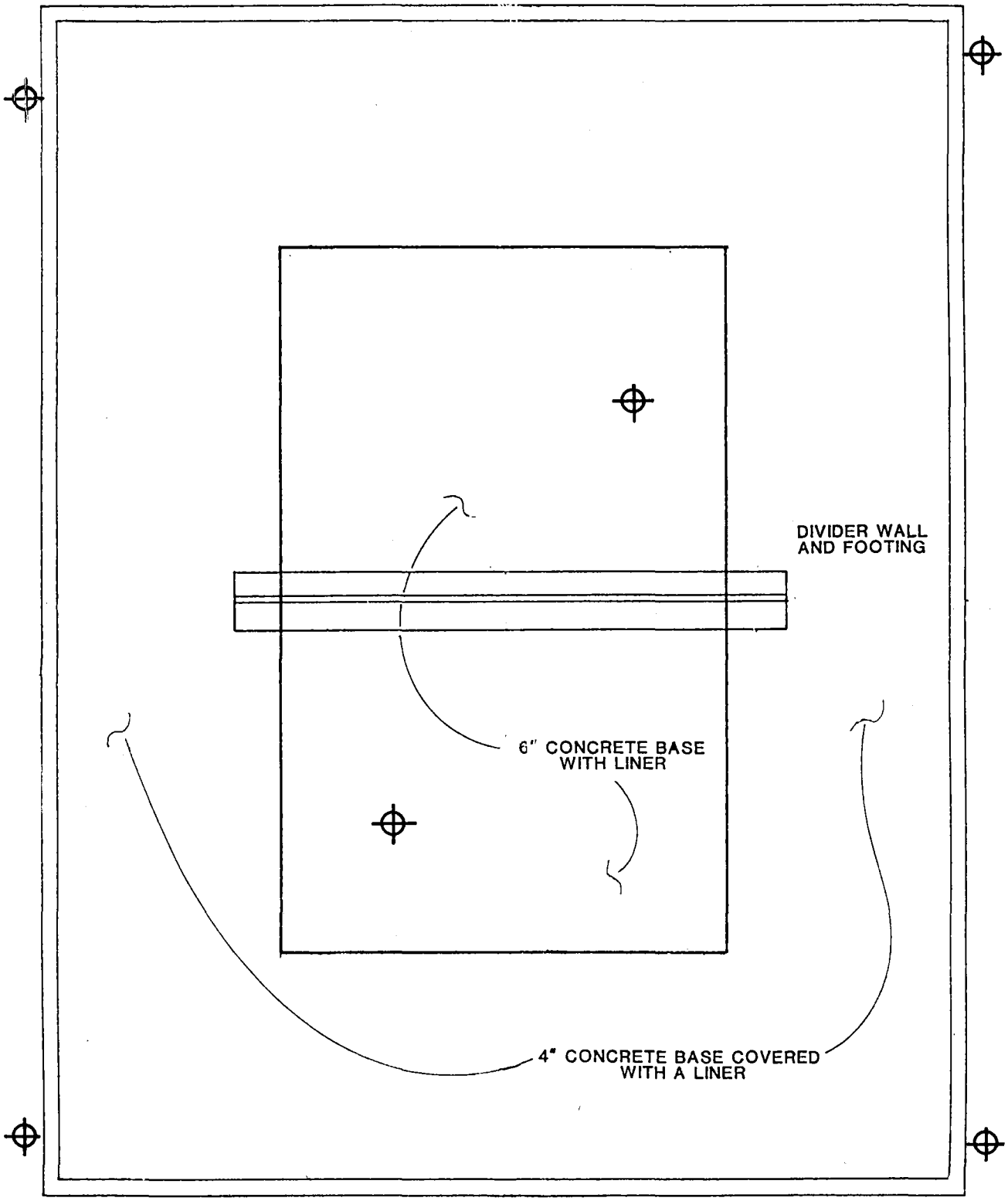

SOIL BORING LOCATION
FOR DETERMINATION OF
CONTAMINATION EXTENT

E.C.JORDAN CO. ENGINEERS & SCIENTISTS	SAMPLING LOCATIONS FOR CLEAN CLOSURE
U.S. DEPARTMENT OF THE NAVY	CLOSURE PLAN
U.S. NAVAL STATION MAYPORT, FLORIDA	5097-05 FIGURE 7

The contaminated soils will be pH-adjusted using a reagent which has been determined by laboratory batch testing to be the most cost efficient. The soil would then be mixed on site and replaced in the excavation.

Dirty Closure Scenario. If the soils beneath the basin are determined to be contaminated, a cover could be installed to prevent leaching of the contaminates into the groundwater. The cover would consist of a synthetic liner underlain by an impermeable clay layer placed over the contaminated soil and construction rubble. A conceptual design for such a closure system is shown in Figures 8 and 9. As shown in Figure 9, the synthetic liner will be overlain by a drainage layer for removal of infiltration. Above the drainage layer is a soil layer to support the vegetation cover and promote surface drainage.

A detailed Closure and Post-Closure Plan will be submitted within 30 days after the submittal of the Groundwater Monitoring Report that substantiated contamination of the groundwater. The plan will include detailed design calculations, data, engineering drawings, specifications, inspection criteria, and a post-closure maintenance program.

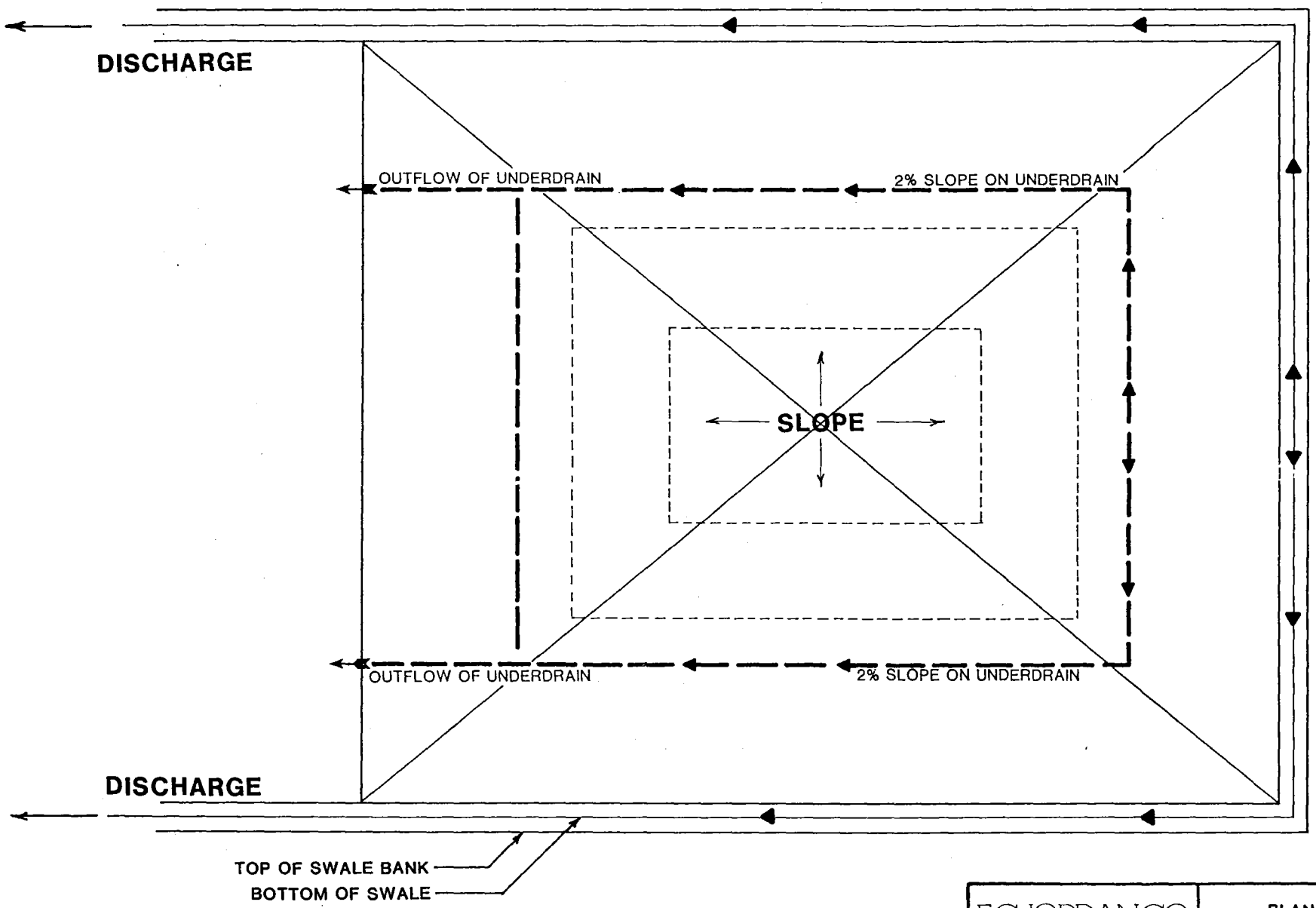

NOT TO SCALE

E.C.JORDAN CO. ENGINEERS & SCIENTISTS	PLAN OF CLOSURE COVER
U.S. DEPARTMENT OF THE NAVY	CLOSURE PLAN
U.S. NAVAL STATION MAYPORT, FLORIDA	5097-05 FIGURE 8

SECTION B-B'

CROSS SECTION VIEW (LOOKING EAST)

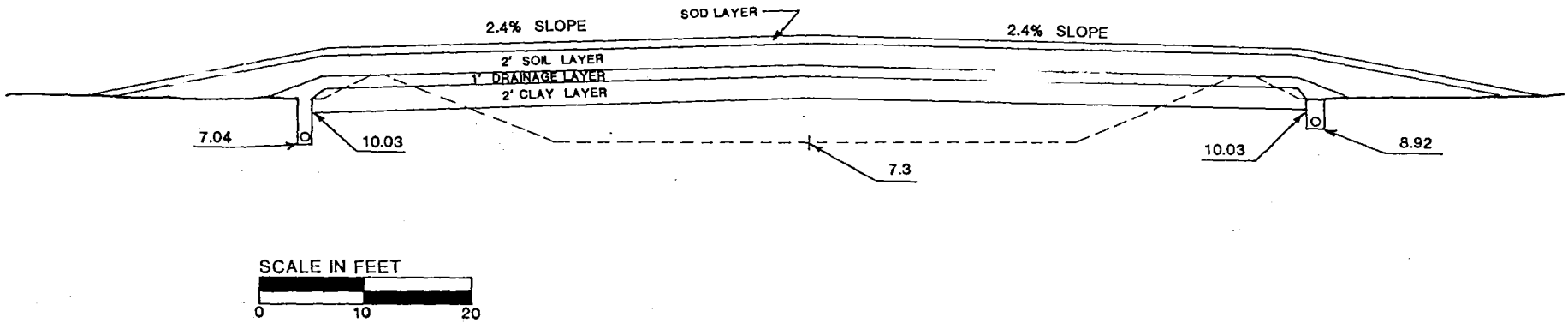

NOTE:
ELEVATIONS IN FEET MSL

E.C.JORDAN CO. ENGINEERS & SCIENTISTS	CROSS SECTION OF CLOSURE COVER
U.S. DEPARTMENT OF THE NAVY	CLOSURE PLAN
U.S. NAVAL STATION MAYPORT, FLORIDA	5097-05 FIGURE 9

TIME SCHEDULE

Termination of use of the Neutralization Basin as a RCRA-regualted facility will commence after approval of this Closure Plan by FDER. Therefore, the following time schedule will relate to that approval date.

Time	Action
Termination Date	**30 days after FDER approval of Closure Plan**
30 days after termination	Treat or remove any onsite hazardous waste
120 days after termination	Complete closure and certification
----------(if contaminated)----------	
120 days after termination	Commence removal of liner and asphalt base
Upon closure	Begin post closure care if needed
Upon submission	Notify FDER and Duval County by survey plat of disposal area
90 days after closure	Prepare notice in property deed of hazardous waste disposal

APPENDIX A

SITE INFORMATION

SITE INFORMATION

Facility:	Naval Station - Mayport
Location:	Mayport, Duval County, Florida
Owner:	United States Department of the Navy
Commanding Officer:	Captain J. B. Mitchell, Jr., USN
Address:	Post Office Box 265 Mayport, Florida 32228 (904) 246-5201
EPA ID No.:	FL 9170 024 260
Site Name:	Neutralization Basin at Bldg. 1241
Latitude:	30° 23′ 50" N.
Longitude:	81° 24′ 40" W.
Contract Person:	Michael Davenport Environmental Engineer Public Works Department Naval Station - Mayport (904) 246-5268
Engineer of Record:	Myron L. Hayden, Ph.D., P.E. E.C. Jordan Company 2571 Executive Center Circle Drive, S-100 Tallahassee, Florida 32301 (904) 656-1293

5097MP07.TXT
F03.11.88

APPENDIX B

EQUIPMENT DECONTAMINATION PROCEDURE

5097MP07.TXT
F03.11.88

EQUIPMENT DECONTAMINATION PROCEDURE

SAMPLING EQUIPMENT

1. Scrub sampling equipment with a detergent solution (e.g., alconox (tm) in tap water)

2. Rinse with tap water

3. Rinse with deionized water

4. Rinse with isopropyl alcohol

5. Allow to air dry completely

6. Rinse with deionized water if sufficient drying time is not available

EXCAVATION EQUIPMENT

All excavation equipment will be steam cleaned with the washwater being collected and disposed of by the Naval Station.

GROUNDWATER MONITORING PLAN
NEUTRALIZATION BASIN AT BLDG. 1241

EPA ID NO. FL9170024260

U.S NAVAL STATION - MAYPORT
MAYPORT, FLORIDA

Prepared for:

SOUTHERN DIVISION
NAVAL FACILITIES ENGINEERING COMMAND
CHARLESTON, SOUTH CAROLINA
Contract No. N62467-86-C-0174

Prepared by:

E.C. JORDAN CO., ENGINEERS AND SCIENTISTS
2571 EXECUTIVE CENTER CIRCLE EAST, SUITE 100
TALLAHASSEE, FLORIDA 32301-5001

Project No. 5097-05
R. Michael Nugent, Ph.D. - Project Manager

December 1988

GROUNDWATER MONITORING PLAN
NEUTRALIZATION BASIN AT BLDG. 1241

U.S NAVAL STATION - MAYPORT
MAYPORT, FLORIDA

INTRODUCTION

This groundwater monitoring plan was prepared to comply with the provisions of FAC 17-30 and 40 CFR 265.91 and 265.92 for the Neutralization Basin at the boiler plant at Building No. 1241. The basin has been designated by FDER as receiving a corrosive waste, classified as D002 by definition in 40 CFR 261.22.

SITE DESCRIPTION

The Neutralization Basin at Building No. 1241 is located on the south bank of the St. Johns River at the north edge of U.S. Naval Station (NAVSTA) - Mayport. The site location is shown on Figure 1. The site is on a man-modified sand spit between the river and the Mayport Basin which is used for berthing Navy ships.

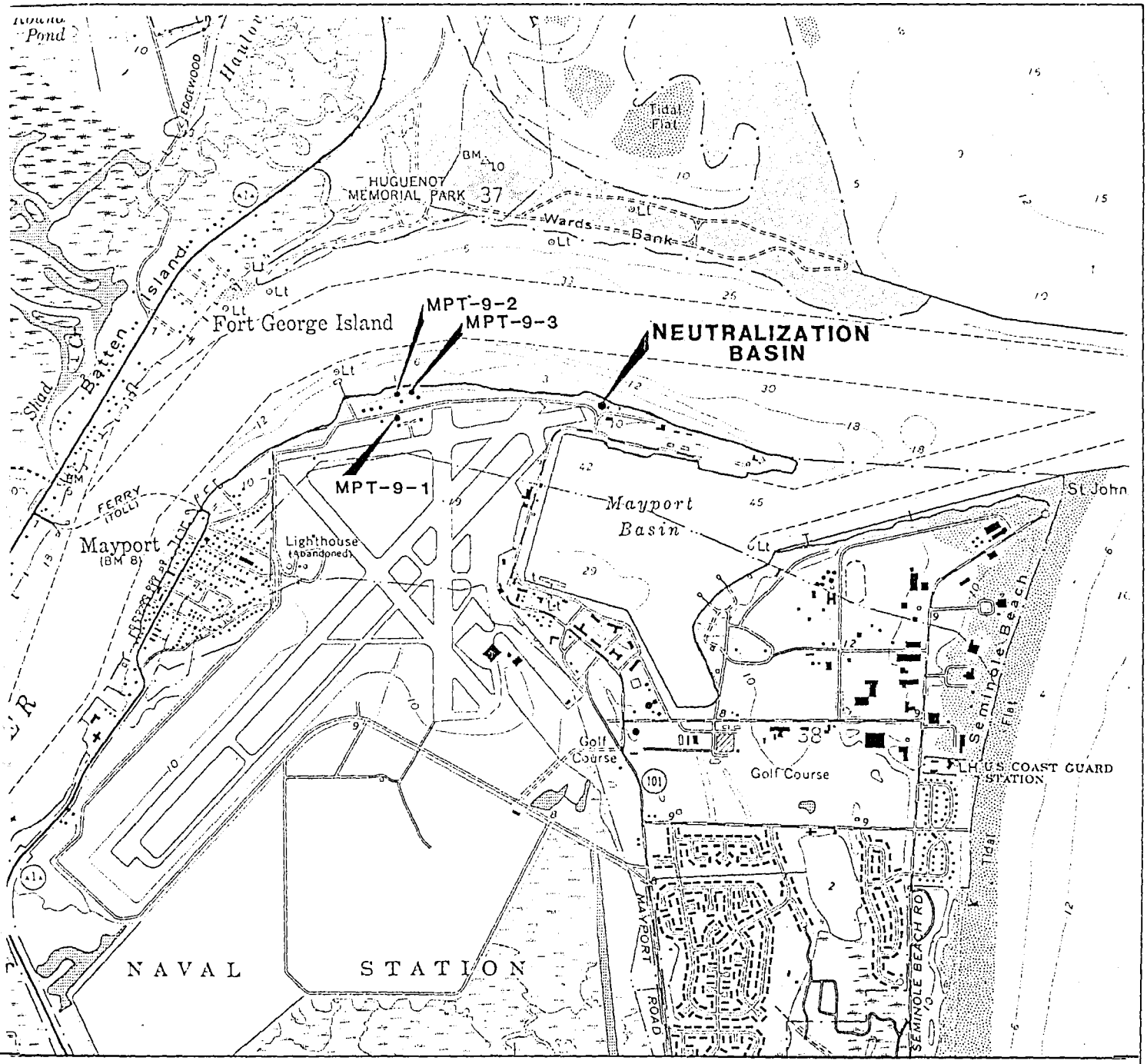

N

SCALE IN FEET

0 2000 4000

E.C.JORDAN CO. ENGINEERS & SCIENTISTS	NAVAL STATION MAP
U.S. DEPARTMENT OF THE NAVY	GROUNDWATER MONITORING PLAN
U.S. NAVAL STATION MAYPORT, FLORIDA	5097-05 FIGURE 1

Topography of the site is relatively flat with a ten foot rip-rap slope down to the St. Johns River. Site elevation is approximately 11 feet above mean sea level. A topographic map encompassing the area within 1000 feet of the hazardous waste management area is presented in Appendix A. The map does not show the area north of the management area, as this area is in the St. Johns River, which is over 2000 feet wide at this point.

In northeastern Florida, the distribution of sediments is controlled by the Penisular Arch and the Southeast Georgia Embayment. NAVSTA Mayport lies at the boundary of this embayment. More than 1,500 feet of Eocene and younger age sediments were deposited in the region underlying the station.

The underlying geologic sequence consists of flay-lying unconsolidated deposits of sands, silts and clays overlying a thick sequence of marine carbonates. Essentially, three discernible geologic units underlie the station (Figure 2):

1. <u>surficial deposits</u> which form a unit approximately 100 feet thick and are of late Miocene to Recent age;
2. <u>Hawthorn Formation</u> which is approximately 300 feet thick and of middle Mocene age; and

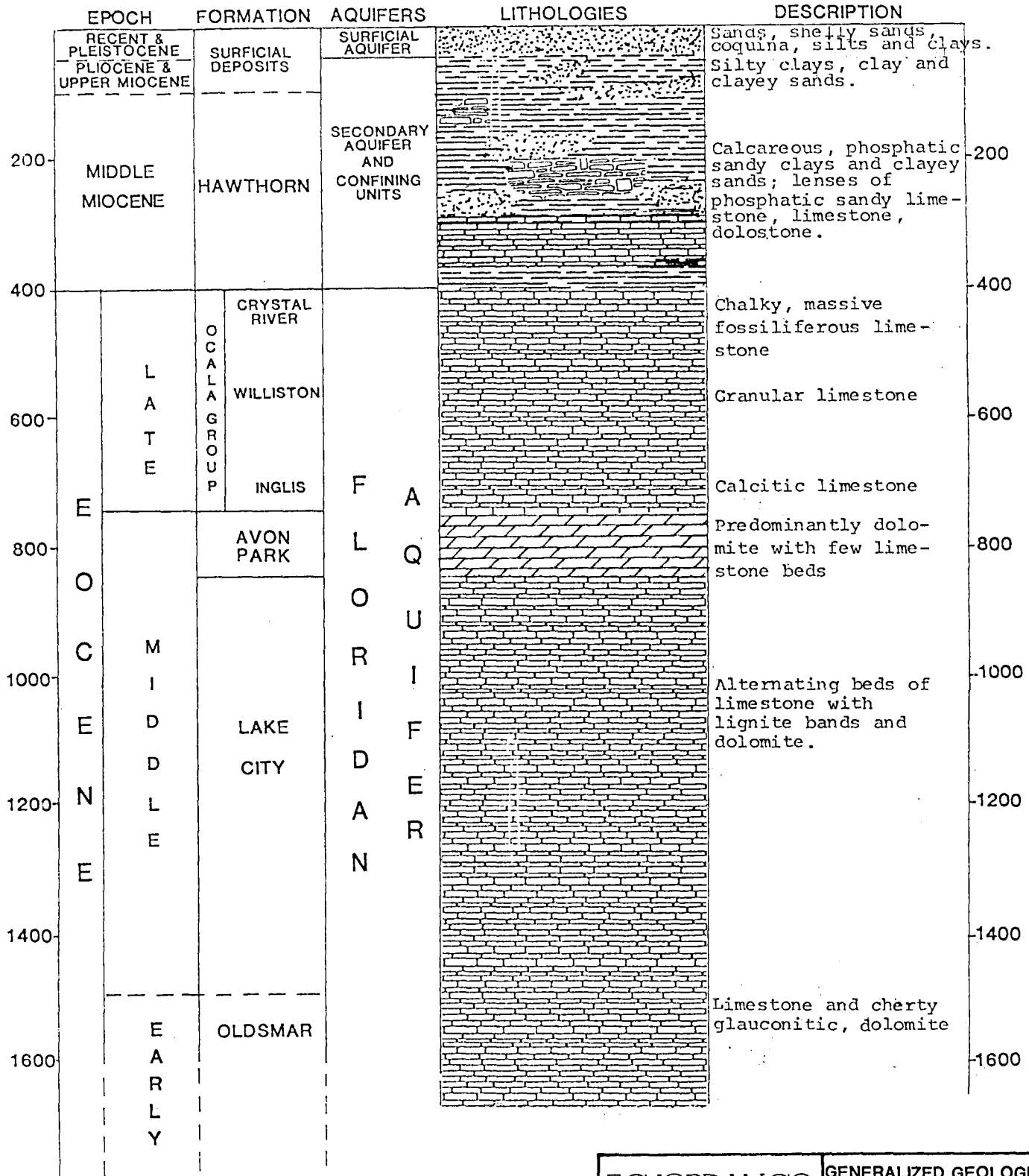

SOURCES: LEVE, 1966,
GERAGHTY & MILLER, 1983,
ESE, 1986.

E.C.JORDAN CO. ENGINEERS & SCIENTISTS	GENERALIZED GEOLOGIC COLUMN BENEATH THE MAYPORT AREA
U.S. DEPARTMENT OF THE NAVY	GROUNDWATER MONITORING PLAN
U.S. NAVAL STATION MAYPORT, FLORIDA	5097-06 FIGURE 2

3. marine carbonate sequences of the Floridan aquifer which are of Eocene age and comprise a unit greater than 1,000 feet thick.

The shallow geology of the site consists of beach sand deposits, dredge spoil and rock rip-rap debris, which have been intermingled over the last 45 years. Appendix B contains three boring logs (MPT-9-1, MPT-9-2 and MPT-9-3) for monitoring wells located 2600 feet west of the management area and advanced to a depth of 17 feet below land surface (BLS). A generalized lithologic column for the surficial deposits is present in Figure 3.

Lithologically, the Hawthorn Formation is quite variable and consists of calcareous, phosphatic sandy clays and clayey sands interbedded with thin discontinuous lenses of phosphatic sand, phosphatic sand limestone, limestone and dolostones. The limestone and dolostone lenses are thicker and more prevalent near the base of the Hawthorn Formation. The permeable sand and limestone layers within the Hawthorn's confining clays form the secondary artesian aquifer. The Hawthorn Formation serves as a confining layer which separates the shallow aquifer from the underlying Floridan aquifer. It lies unconformably above the Ocala Group (Crystal River Formation).

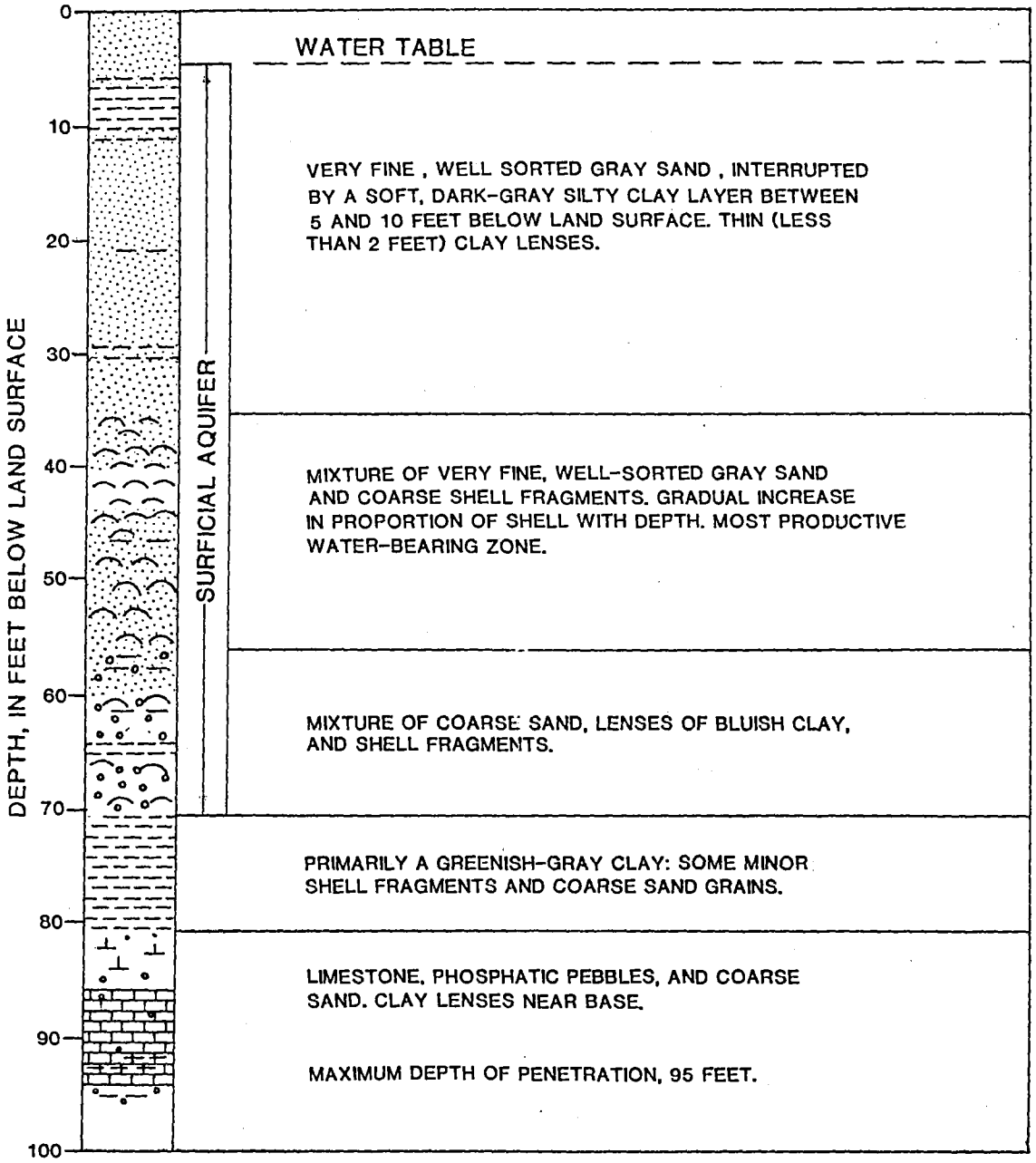

SOURCE: FRANKS (1980)

E.C.JORDAN CO. ENGINEERS & SCIENTISTS	GENERALIZED LITHOLOGIC COLUMN SHOWING SEDIMENTS PENETRATED BY TEST WELLS
U.S. DEPARTMENT OF THE NAVY	GROUNDWATER MONITORING PLAN
U.S. NAVAL STATION MAYPORT, FLORIDA	5097-06 FIGURE 3

The marine carbonate sequence which makes up the Floridan aquifer, beneath NAVSTA Mayport, consists of the following formations in descending order:

1. the Ocala Group which consists of the Crystal River Formation, the Williston Formation and the Inglis Formation;
2. the Avon Park Limestone;
3. the Lake City Limestone; and
4. the Oldsmar Limestone.

These formations range in age from the late Eocene, Crystal River Formation to the early Eocene, Oldsmar Limestone.

The Crystal River Formation is a white to cream, chalky, massive fossiliferous limestone and is the youngest Eocene formation underlying NAVSTA Mayport. The Williston Formation, which lies conformably between the overlying Crystal River Formation and the underlying Inglis Formation, is a tan to buff granular limestone. The Inglis Formation, of early late Eocene age, is lithologically a tan to buff calcitic limestone which is very similar to the Williston Formation (Leve, 1966).

The Avon Park Limestone of late middle Eocene unconformably underlies the Ocala Group. It consists of alternating beds of tan, hard, massive dolomite and brown to cream, granular calcitic limestone. The Lake City Limestone unconformably underlies the Avon Park Limestone and is early middle Eocene in age. Lithologically it consists of alternating beds of white to brown, chalky to granular limestone with lignite bands and a gray to tan dolomite. Below the Lake City Limestone is the Oldsmar Limestone, of early Eocene age. It consists of a cream to brown, soft, granular limestone and cherty, glauconitic, massive to finely crystalline dolomite (Leve, 1966).

NAVSTA Mayport is situated at the mouth of the St. Johns River, on the south bank (see Figure 1). The facility is bordered on the east by the Atlantic Ocean and to the north and northwest by the St. Johns River. To the south and southwest an extensive tract of tidal marsh exists within the boundaries of the facility.

The facility has one man-made, freshwater lake, Lake Wonderwood, located in the on-base housing area. Lake Wonderwood is approximately 20 acres in size and was created to provide fill for the adjacent housing area. The lake has a

depth of approximately 20 feet and is used by facility personnel as a recreation source.

The other dominant, surface water feature on base is the turning basin, i.e., Mayport Basin. The turning basin was constructed during the early 1940s through dredging the eastern portion of Ribault Bay. Dredge spoil was pumped behind the west bulkhead to fill the old bay in order to elevate the land surface. Subsequent maintenance dredge spoil has been used to fill in other areas of the facility. Originally Mayport Basin was dredged to a depth of 29 feet. In 1952 the basin was deepened to a depth of 40 feet to provide access to larger ships.

Surface runoff from NAVSTA Mayport enters Mayport Basin, the St. Johns River, Lake Wonderwood, Sherman Creek, Pablo Creek, Chicopit Bay, and the Atlantic Ocean. The runways provide an artificial drainage divide between the northwest and southeast portions of the facility. To the north soils along the St. Johns River tend to be very sandy and have high infiltration capacities. In this area there exists little surface runoff and few drainage features are evident.

To the south of the runways, soils are underlain by less permeable deposits and the topography is flatter and lower in

elevation. The predominate drainage feature in this area is Sherman Creek.

The surficial aquifer extends to a depth of approximately 70 feet below land surface (Causey Phelps, 1978; Franks, 1980). It is comprised of unconsolidated deposits of sand, shells and clay which vary in lithology, thickness and permeability throughout the facility. Causey and Phelps (1987) report that the surficial aquifer over most of Duval County is composed of an upper and a lower zone which are separated by deposits of lower permeability at a depth from 25 to 50 feet below land surface. Franks (1980), however, found no evidence of this confining bed in the area east of Jacksonville Shipyard.

Franks (1980) estimated the transmissivity of the primary water-bearing sand and shell zone (35 to 55 feet BLS) of the surficial aquifer to be 2,400 ft^2/day (hydraulic conductivity equal to 34 ft/day). Laboratory testing of a near surface Shelby tube sample (8 to 10 feet BLS), obtained from the landfill area, yielded a hydraulic conductivity of 3.8 ft/day (Geraghty and Miller, 1984). Results from single-hole permeability tests conducted during the study conducted by E.C. Jordan (1987) in September 1987 indicate that the hydraulic conductivity throughout much of the facility exceeds 2.8 ft/day (the upper limit of the test procedure).

Geraghty and Miller (1984), citing the work of Causey and Phelps (1978), report that groundwater in the surficial aquifer at NAVSTA Mayport is fresh in the upper part but becomes brackish below a depth of 40 feet, This was also confirmed by Frazee and McClaugherty (1979) in other area near NAVSTA Mayport. Frazee & McClaugherty (1979) found chloride concentration to be less than 250 mg/l in samples obtained near the water table. At depths greater than 50 feet, the chloride concentration exceeded 4000 mg/l. This condition should be more pronounced near the coast and the St. Johns River.

The secondary artesian aquifer consists of sand and limestone lenses interbedded in the clayey sands and sandy clays of the Hawthorn Formation and is situated between the surficial aquifer and the underlying Floridan aquifer. Spechler (1982) noted that the most productive zone, a limestone layer in the upper part of the Hawthorn, is notably absent in the Mayport area. Water levels in the secondary artesian aquifer indicate that groundwater flow in the Mayport area is towards the northeast (Fairchild, 1972).

The Floridan aquifer system is the principal source of fresh water in northeast Florida. It is comprised in part or in all of the Oldsmar Limestone, Lake City and Avon Park Limestones, the Ocala Group, and a few discontinuous thin water bearing zones in the lower portion of the Hawthorn Formation.

The Ocala Group is a homogeneous sequence of permeable, hydraulically connected, marine limestone beds that contain very few hard dolomite or limestone beds which restrict the vertical movement of water. The Avon Park Limestone consists almost entirely of hard, relatively impermeable, dolomite confining beds and soft, permeable limestone and dolomite water-bearing zones.

The top of the Floridan aquifer occurs at a depth of about 400 feet BLS at NAVSTA Mayport. Published transmissivities of the Floridan aquifer in eastern Duval County range from approximately 85,000 to 160,000 gpd/ft (Leve, 1968).

Geraghty and Miller (1983) report that groundwater in the Floridan aquifer, in the vicinity of Mayport, is moving southward toward areas of heavy pumpage along the coast. Floridan wells, in the vicinity of NAVSTA Mayport, are under sufficient artesian pressure to flow at the surface. This results in upward hydraulic gradient between the Floridan and the surficial aquifer.

Water quality in the Floridan aquifer is potable in the Mayport area. The concentrations of total dissolved solids is approximately 400 mg/l and the concentration of chlorides is around 25 mg/l.

Within the vicinity of the neutralization basin, the St. Johns River and the Mayport Basin are tidally-influenced with a diurinal tide of 5 feet. Tidal fluctuation are also expected in groundwater beneath the site. The estimated depth to water is 9 to 10 feet below land surface. Groundwater flow direction should be from the recharge area on the sand spit to the river, and thus should be northward under the basin and into the St. Johns River. No wells are located between the Neutralization Basin and the St. John River.

MONITORING WELLS

In order to monitor groundwater quality at the site, two wells are proposed. Due to space limitations, the presence of the new treatment facility, and the location of the site with respect to the St. Johns River and the turning basin, an additional downgradient well is impractical. This was previously discussed with FDER in a preliminary meeting held on 24 July 1987. Site details and well locations are shown on Figure 4. One well (MPT-11-01) will be located upgradient (to the south) of Building No. 1241. The siting of monitoring well MPT-11-01 here is due to the need to avoid underground utilities and adjacent activities. The other well (MW-11-02) will be located downgradient of the neutralization basin at the northeast corner of the basin. Groundwater levels will be intensely monitored after installation of the wells to

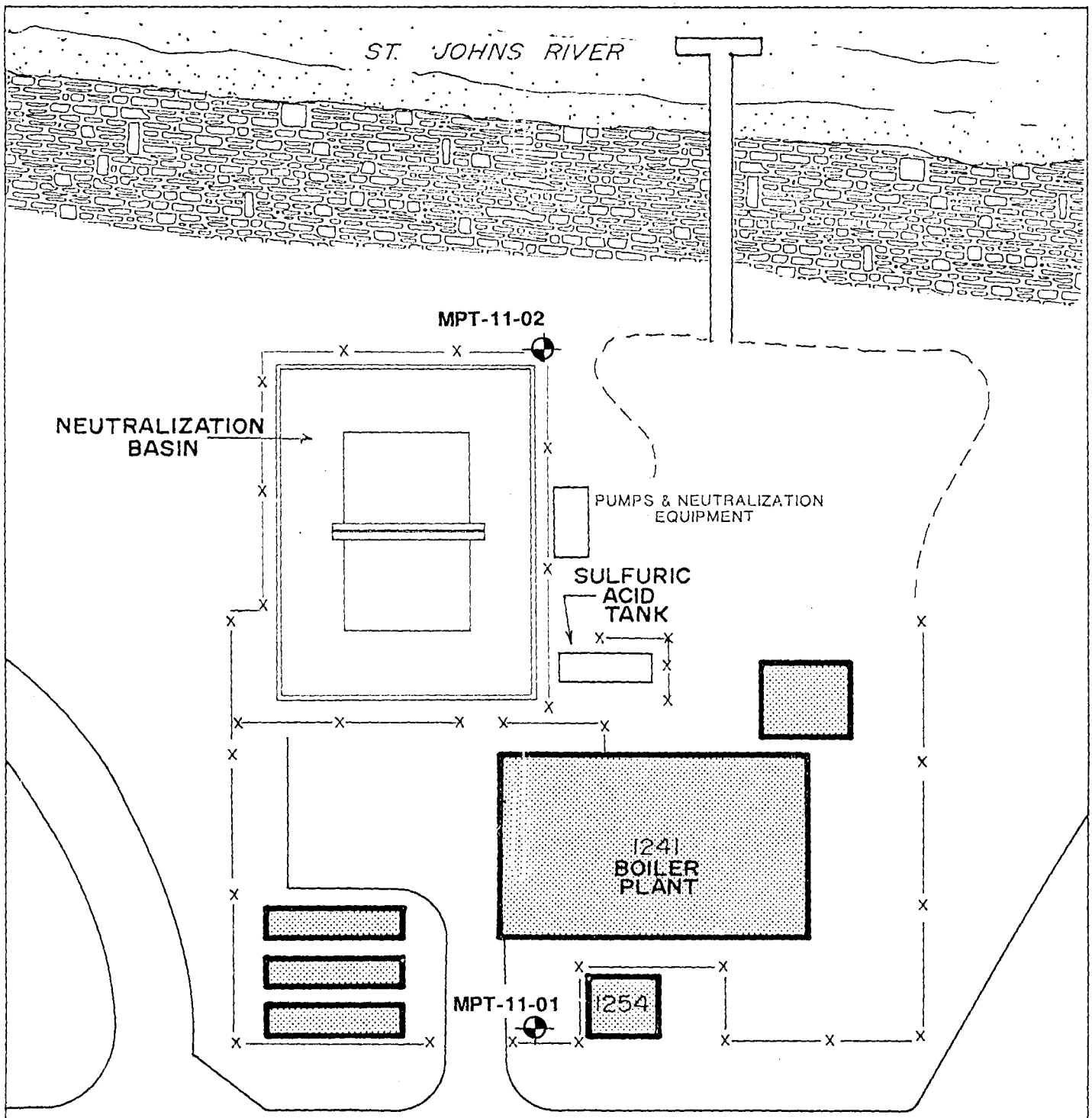

LEGEND

MONITORING WELL

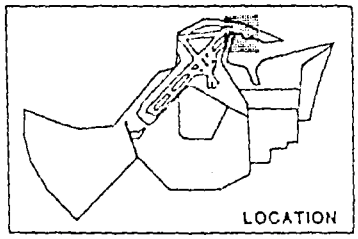

N

SCALE IN FEET

0 20 40

E.C. JORDAN CO. ENGINEERS & SCIENTISTS	NEUTRALIZATION BASIN SITE DETAILS
U.S. DEPARTMENT OF THE NAVY	GROUNDWATER MONITORING PLAN
U.S. NAVAL STATION MAYPORT, FLORIDA	5097-06 FIGURE 4

determine if the water levels are tidally influenced. If the assumed "up" and "downgradient" directions are found to be incorrect, additional wells will be installed.

Drilling permits will be obtained from Duval County prior to drilling. The monitoring wells will be drilled by hollow-stem auger to an anticipated depth of 18 feet below land surface. The exact depth of the screened interval will be determined after drilling such that the well screen will intersect the water table. The wells will consist of 2-inch PVC casing with the bottom 10 feet screened with 0.015-inch slots. A typical well diagram is shown on Figure 5. The wells will be constructed with 6/20 sand pack to 0.5 feet above the screen section, a 2-foot bentonite seal, and cement grout to the surface. The wells will be completed with screw tops and flush-mount manholes to allow equipment access over the wells.

Detailed descriptions of monitoring well construction and litholigic information will be submitted to FDER after the installation of the wells. Additionally, the tops of casings and the land surface, adjacent to the monitoring wells, will be surveyed to within $\pm$0.01 feet Mean Sea Level (MSL).

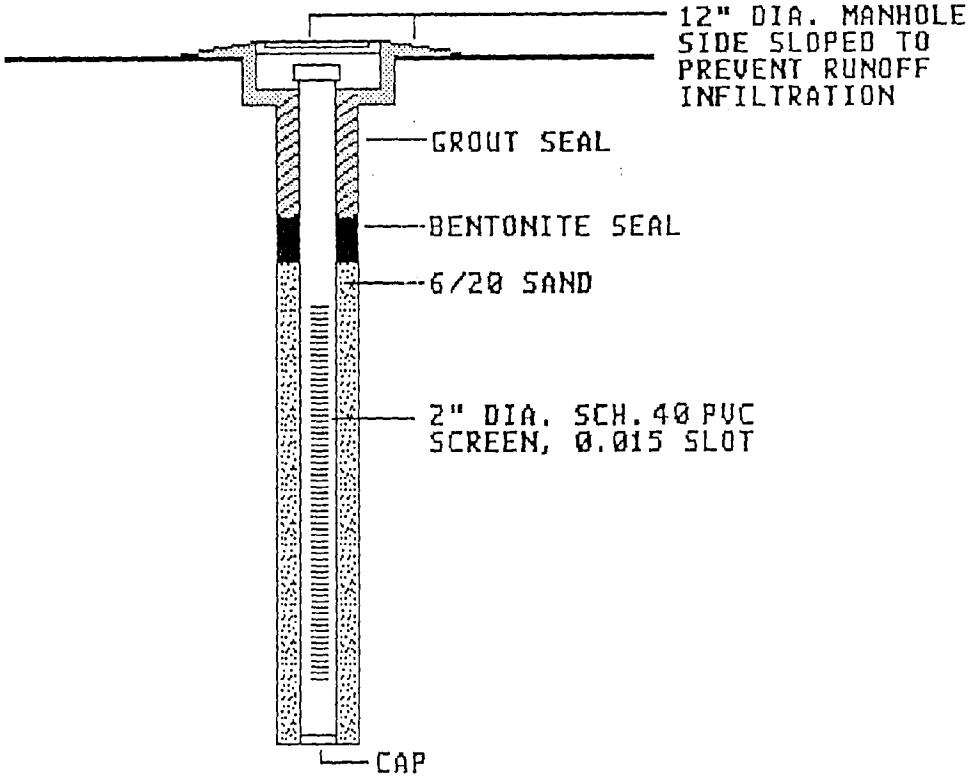

E.C.JORDAN CO. ENGINEERS & SCIENTISTS	TYPICAL MONITORING WELL DETAIL
U.S. DEPARTMENT OF THE NAVY	GROUNDWATER MONITORING PLAN
U.S. NAVAL STATION MAYPORT, FLORIDA	5097-05 FIGURE 5

SAMPLING AND ANALYSIS

Monitoring wells will be measured and sampled in the following manner.

Sampling equipment needed for collecting representative samples of groundwater are as follows:

1) 100-ft electric measuring tape with water-level indicator ("M-scope") consisting of an ammeter, electrode, and 100-ft cable;
2) Several gallons of distilled water and wash bottle;
3) Clean cloth;
4) Plastic sheeting or large garbage bags;
5) Bottom-filling teflon bailer and nylon monofilament line;
6) Graduated bucket;
7) Sample bottles;
8) Sample bottle labels, waterproof marking pen;
9) pH meter;
10) Thermometer;
11) Specific conductivity meter;
12) Preservatives for water samples;
13) Field data forms, chain of custody forms; and
14) Ice chest and ice.

Procedures for Measuring Water Levels

- After unscrewing the casing cap, measure the depth to water in the well. All measurements are made from the top of PVC casing.

- Using the M-scope, drop the probe down the center of the casing and allow cord to hang down the well. When indicator indicates water contact, determine depth to water from top of PVC casing. Record depth to water on field data form to within $\pm$0.01 feet. Subtract this value from elevation of top of PVC casing to find elevation of water level.

- The water-level measurements must be obtained at each sampling point each time water samples are collected.

- Clean M-scope with distilled wear and isopropyl alcohol and wipe dry with clean cloth prior to measuring the next well.

Procedures for Purging Standing Water in Wells

- It is recommended to remove, with a bailer, at least three well volumes of water from the well to insure an accurate sample for groundwater quality measurements. To calculate

the volume of water to be purged, first determine the height of the water column by subtracting the water level below the top of casing from the total depth of the well. Multiply the height of the water column by 3.12 (number of gallons per linear foot in an 8.75 inch diameter hole, this includes the sand pack) to obtain the number of gallons in one well volume. Use the graduated bucket to measure the volume of water removed from the well. Dispose of this purge water at the sewage treatment plant.

- After three well volumes have been purged from the well, analyze the groundwater for pH and specific conductance and record on field data sheet. Repeat this procedure on separate samples, from the same well, until the pH and specific conductance measurements have stabilized for three consecutive readings.

- Clean bailer with distilled water and isopropyl alcohol before using in other wells to prevent cross contamination of groundwater in the monitor wells.

Procedure for Sample Collection and Field Analyses

- Allow well to recharge sufficiently to obtain samples. If a well is pumped dry, it will be allowed to recover and sampled within 2 to 4 hours.

- Analyses of pH (four times), temperature, and specific conductance (four times) should be made in the field at the time of sampling because these parameters change rapidly and a laboratory analysis may not be representative of the true groundwater quality. Remove enough water from well with the teflon bailer to determine temperature of water, specific conductivity, and pH. Record values on field data sheet and discard water. Repeat procedure three more times.

- Collect well sample with a teflon bailer, transfer water from bailer to sample bottles provided by the laboratory. Care should be taken to not agitate sample in order to limit amount of oxygen added to the sample. Minimize the number of containers used in order to limit the addition of outside contaminants. Sample bottles should be prepared as specified by the EPA "Manual of Methods for Chemical Analysis of Water and Wastes" (EPA 625/6-74-003 and EPA 600/4-79-020).

- Complete the required information on the Chain of Custody Form (Figure 6). Required information includes; the project name; signatures of the samplers; the sample numbers, date collected, time collected, type of sample (i.e., grab or composite), sample location, the number of containers, and the sample type; the date and time the

PAGE ___ OF ___

CHAIN OF CUSTODY RECORD

PROJECT NO. | PROJECT NAME

SAMPLERS (SIGNATURE)

STA. NO.	DATE	TIME	COMP.	GRAB	STATION LOCATION	NO. OF CON-TAINERS	SAMPLE TYPE												REMARKS INDICATE SOIL/WATER/AIR SEDIMENT/SLUDGE

RELINQUISHED BY: (SIGNATURE)	DATE / TIME	RECEIVED BY: (SIGNATURE)	RELINQUISHED BY: (SIGNATURE)	DATE / TIME	RECEIVED BY: (SIGNATURE)
RELINQUISHED BY: (SIGNATURE)	DATE / TIME	RECEIVED BY: (SIGNATURE)	RELINQUISHED BY: (SIGNATURE)	DATE / TIME	RECEIVED BY: (SIGNATURE)
RELINQUISHED BY: (SIGNATURE)	DATE / TIME	RECEIVED FOR DISPOSAL BY: (SIGNATURE)	DATE / TIME	REMARKS	

E.C.JORDAN CO. ENGINEERS & SCIENTISTS	EXAMPLE OF CHAIN OF CUSTODY FORM
U.S. DEPARTMENT OF THE NAVY	GROUNDWATER MONITORING PLAN
U.S. NAVAL STATION MAYPORT, FLORIDA	5097-06 FIGURE 6

samples were delivered for shipping; and the names of those responsible for receiving the samples at the laboratory.

ANALYTICAL PARAMETERS

Groundwater samples will be collected from the two monitoring wells and analyzed quarterly for one year. The analytical laboratory will be Pioneer Laboratory, Inc. (QA/QC number not assigned). First quarter samples will be analyzed for the parameters listed in Title 40 Code of Federal Regulations (CFR) paragraph 265.92(b) and the secondary drinking water quality standards listed in Florida Administrative Code (FAC) Chapter 17-22. These parameters plus their corresponding analytical methods for determination and the method detection limits are presented in Table 1.

The analytical program for the subsequent three quarterly sampling events will consist of measurements of pH, specific conductance, the 40 CFR 265 Appendix III metals. In addition, any first quarter parameter whose concentration exceeds the water quality standard, as established in Chapter 17-22, FAC or existing background concentration or value (whichever is higher) will also be analyzed. The deletion of a first quarter parameter from further analysis, based upon its exceedance of a water quality standard but not the background concentration or value, will be discussed with FDER.

TABLE 1
ANALAYTICAL PARAMETER
GROUNDWATER MONITORING PLAN
U.S. NAVAL STATION MAYPORT, FLORIDA

PARAMETER	EPA METHOD	DETECTION LIMIT (mg/l)
40 CFR 265 APPENDIX III METALS		
Arsenic (Total)	206.2	0.002
Barium (Total)	208.2	0.03
Cadmium (Total)	213.2	0.002
Chromium (Total)	218.2	0.02
Lead (Total)	239.2	0.01
Mercury (Total)	245.1	0.0002
Selenium (Total)	270.2	0.002
Silver (Total)	272.2	0.01
40 CFR 265 APPENDIX III NONMETALS		
Endrin	608	0.00007
Fluoride	340.2	
Lindane	608	0.0002
Nitrate-N	253.3	0.1
Methoxychlor	608	0.1
Toxaphene	608	0.005
2,4-D	615	0.1
2,4,5-TP (Silvex)	615	0.01
Radium	304	
Gross Alpha	302	
Coliform Bacteria	909A*	
Turbidity (applicable to surface waters only)		
40 CFR 265.92(b)(2) PARAMETERS		
Chloride	325.3	1.0
Iron (Total)	236.1	0.02
Manganese (Total)	243.1	0.01
Phenols	420.1	0.001
Sodium	273.1	1.0
Sulfate	375.1	1.0

ANALYTICAL PARAMETERS (Cont'd)

40 CRF 265.92(b)(3) PARAMETERS

pH	
Specific Conductance	
Total Organic Carbon	415.1
Total Organic Halogen	450.1

CHAPTER 17-22.220 SECONDARY DRINKING WATER PARAMETER
(not specified elsewhere)

Color	110.2	
Copper	220.2	0.01
Corrosivity		
Foaming Agents	425.1	0.025
Odor	140.1	
Total Dissolved Solids	160.1	
Zinc (Total)	289.2	0.02

* Denotes Standard Methods Procedure

EVALUATION OF ANALYTICAL RESULTS

For those parameters that are scheduled for analysis only during the first quarter sampling episode, analytical results from each monitoring well will be numerically compared to FDER drinking water standards, as set forth in Chapter 17-22, FAC. In addition, results from each of the two monitoring well samples will be numerically compared between themselves. The intent of this dual comparison will be to assess whether the potential exists that activities associated with the neutralization basin have resulted in an increase in the concentration of any of the parameters in groundwater. This evaluation will consist of comparing the magnitude of the analytical results for the downgradient monitoring well with those of the upgradient well and the corresponding water quality standards. If the data suggest that activities at the neutralization basin have resulted in an increase in the concentration of a parameter, any necessary parameter modification in the analytical program and the necessity of a groundwater quality assessment will be summarized in report format and discussed with Southern Division and FDER.

groundwater quality assessment will be summarized in report format and discussed with Southern Division and FDER.

For the quarterly monitoring of indicator parameters, results will be statistically compared (Student's t-test) between the two wells after one year of monitoring. If significant differences (0.01 level of significance) are detected, a revised monitoring plan will be submitted to FDER to further evaluate the detected differences, if warranted.

The quarterly monitoring results will be submitted to Southern Division and FDER within 30 days of receipt of the analytical results.

REFERENCES

Causey, L.V. and G.G. Phelps. "Availability and Quality of Water from Shallow Aquifers in Duval County, Florida"; U.S. Geological Survey Water-Resources Investigation 78-92; 1978.

Environmental Science and Engineering, Inc. "Initial Assessment Study, Naval Station Mayport, Florida"; 1986.

Fairchild, R.W. "The Shallow-Aquifer System in Duval County, Florida"; Florida Bureau of Geology, Report of Investigations No. 59; 1972.

Franks, B.J. "The Surficial Aquifer at the U.S. Naval Station Near Mayport, Florida"; U.S. Geological Survey Open-File Report 80-765; 1980.

Frazee, J.M. and D.R. McClaugherty. "Investigation of Ground Water Resources and Saltwater Intrusion in the Coastal Areas of Northeast Florida"; St. Johns River Water Management District Technical Report No. 3; 1979.

Geraghty and Miller, Inc. "Hydrogeologic Assessment and Ground-water Monitoring Plan, U.S. Naval Station, Mayport, Florida"; 1983.

_____. "As-Built Ground Water Monitoring Network Naval Station-Mayport, Mayport, Florida"; 1984.

E.C. Jordan Co. "Final Report NIRP Expanded Site Inspection"; April 1988.

Leve, G.W. "Ground Water in Duval and Nassau Counties, Florida"; Florida Geological Survey Report of Investigations 42; 1966.

Spechler, R.M. "Generalized Configuration of the Top of the Limestone Unit of the Lower Part of the Surficial Aquifer, Duval County, Florida"; U.S. Geological Survey Open-File Report 82-336; 1982.

APPENDIX A

TOPOGRAPHIC MAP

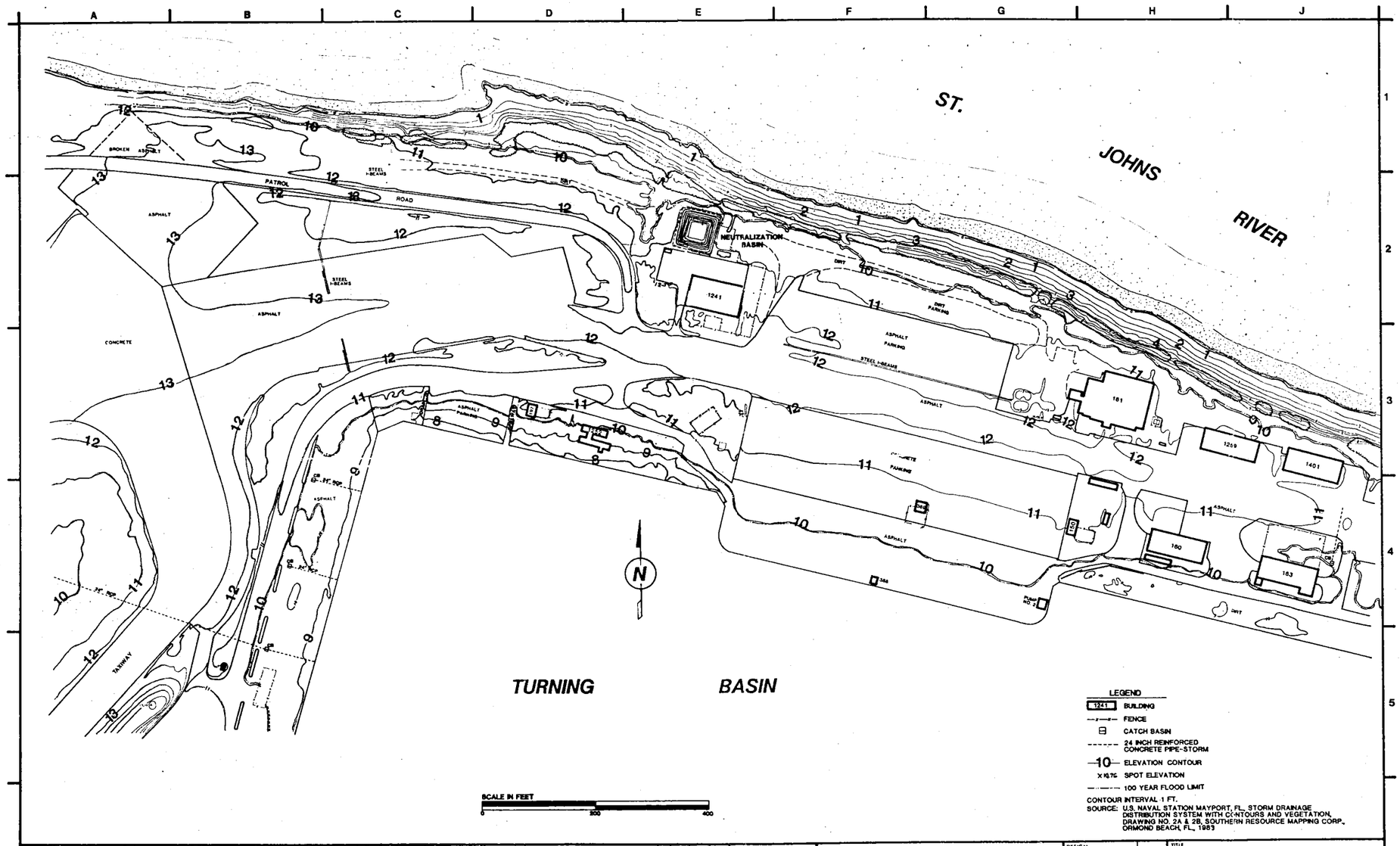

No.	REFERENCE DRAWINGS	FIELD BOOK No.	REV.	DATE	STATUS	MF	BY	CHKD	APPD

SURVEY BY | DATE
SURVEY FILE NO.

E.C. JORDAN CO.
CONSULTING ENGINEERS

CLIENT
SOUTHERN DIVISION NAVAL FACILITIES ENGINEERING COMMAND

DESIGN	
DRAWN	XF
CHKD.	
DEPT. HD.	
PROCESS	
PROJ. MGR.	
CLIENT	
SCALE	

TITLE
TOPOGRAPHIC MAP NEUTRALIZATION BASIN

PROJ NO. 5097-05
DWG NO.
REV.

APPENDIX B

BORING LOGS

BORING NO. MPT-9-1

CLIENT USN, NAVFACENGCOM SDIV PROJECT NO. 5097-04
CONTRACTOR Monitor Testing DATE STARTED 15 Sept. 1987 COMPLETED 15 Sept. 1987
METHOD Hollow Stem CASING SIZE 2" ID HNU 11.7/10.2 PROTECTION LEVEL D
GROUND EL. Unknown SOIL DRILLED 19 ft ROCK DRILLED N/A TOTAL DEPTH 20 ft
LOGGED BY M.C. Diblin CHECKED BY M.R. Clark DATE 24 Sept. 87 BELOW GROUND appr. 11 ft

SAMPLE NUMBER	DEPTH (ft)	P.I. HEADSPACE	SOIL/ROCK DESCRIPTION	BLOWS/6-IN	RECOVERY
SS-01	0-2	1.1	0-.15 dk black surf soil 0.15-0.8 light to dark gry m-c sand w/shell fragments 0.85-1.55 light tan f-m sand with shell fragments one pebble size clay bleb, dry	7/11/21/27	1.55
SS-02	2-4	4.8	0-1.2 v light tan f-m sand with shell fragments, dry	20/22/29/31	1.7
SS-03	4-6	0.0	0.1 f sand with shell fragments, tan to dk brn, dry 1.0-1.7 white f-m sand with large and small shells and fragments, dry	7/13/14/19	1.3
SS-04	6-8	2.4	0.8 same as above 0.8-1.0 gry uniform plastic clay mottled with brn stringers of clay, dry 1.0-1.4 white f-m sand with shell fragments, dry 1.4-1.6 grey sandy clay, moist, plastic		
SS-05	8-10	23.0	0-0.3 tan well sorted f-m sand with large shell fragments, sat 0.3-0.8 tan well sorted vf-f sand, sat 0.8-1.6 off white f-m sand sand with large and small shell fragments, sat	16/21/27/17	1.6
SS-06	15-17	29.1	0-0.3 light gry f-m sand with shell fragments 0.3-2.0 light gry f-m shelly sand (many shell pieces), sat	8/32/50+	2.0

Materials
3.5 bags sand
end cap
10 ft screen
end cap
12 ft riser
1 bucket bentonite pellets
1 bag Portland cement
1 protective steel casing

BORING NO. MPT-9-2

CLIENT USN, NAVFACENGCOM SDIV PROJECT NO. 5097-04
CONTRACTOR Monitor Testing DATE STARTED 16 Sept. 1987 COMPLETED 16 Sept. 1987
METHOD Hollow Stem CASING SIZE 2" ID HNU 11.7/10.2 PROTECTION LEVEL D
GROUND EL. Unknown SOIL DRILLED 17 ft. ROCK DRILLED N/A TOTAL DEPTH 15.0 ft
LOGGED BY Mark Diblin CHECKED BY M.R. Clark DATE 24 Sept. 87 BELOW GROUND 9 ft

SAMPLE NUMBER	DEPTH (ft)	SOIL/ROCK DESCRIPTION	BLOWS/6-IN	RECOVERY
SS-01	0-2	0.00-1.3' light tan f-m sand w/ shell fragments, dry	12/12/15/13	1.3
SS-02	5-7	0.00-1.5' high tan f-m sand w/ shell fragments, dry	17/9/8/8	1.5
SS-03	7-9	0.00-0.5' tan f sand w/ shells 0.5-0.55' blue shells 0.55-1.3' grades to light gry f-m sand w/ shells	17/9/12/13	1.3
SS-04	10-12	0.00-1.5' light grey f-m sand w/ shells and fragments,	7/9/12/13	1.5
SS-05	15-17	0.00-0.4' same as above	2/12/50+	0.4

Materials
end cap
10 ft screen
7.5 ft riser
end cap
2 1/2 bags sand
.75 bucket bentonite
1 bag Portland cement
1 protective steel casing

BORING NO. MPT-9-3

CLIENT USN, NAVFACENGCOM SDIV PROJECT NO. 5097-04
CONTRACTOR Monitor Testing DATE STARTED 16 Sept. 1987 COMPLETED 16 Sept. 1987
METHOD Hollow Stem CASING SIZE 2" ID HNU 11.7/10.2 PROTECTION LEVEL D
GROUND EL. Unknown SOIL DRILLED 17 ft ROCK DRILLED N/A TOTAL DEPTH 15 ft
LOGGED BY M.C. Diblin CHECKED BY M.R. Clark DATE 24 Sept. 87 BELOW GROUND appr. 8-10 ft

SAMPLE NUMBER	DEPTH (ft)	SOIL/ROCK DESCRIPTION		BLOWS/6-IN	RECOVERY
SS-01	0-2	0-0.4	light tan org top soil w/veg	4/13/27/29	
		0.4-1.0	dk tan f uniform sand		1.5
		1.0-1.5	light tan f-m sand w/shell frags		
SS-02	2-4	0-0.15	tan f-m sand w/shells	16/20/20/19	
		0.15-0.5	light tan f uniform sand w/dk black clayey sand layer appr .1' thick		1.6
SS-3	4-6	0.5-1.15	same as above	22/13/11/12	
		1.15-1.5	interbedded brown clay and red sand with shells		1.5
SS-04	6-8	0-0.8	dk brown m sand with some shells	12/8/8/7	
		0.8-1.55	tan f-m sand with some large shells, uniform		1.55
SS-05	8-10	0-1.0	tan f-m sand, 50% shelly, grading to very f light tan sand at the bottom	7/22/22/35	1.8
SS-06	15-17	0-2.0	gry f-m sand with many shell and fragments	7/11/22/30	2.0

Materials
11 bags sand
end cap
10 ft screen
end cap
7.5 ft riser
1 bucket bentonite pellets
1 bag Portland cement
1 protective steel casing