N61331.AR.001732
NSA PANAMA CITY
5090.3a

ALTERNATIVE PROCEDURE REMEDIAL ACTION PLAN FOR AREA OF CONCERN 2 NSA PANAMA CITY FL

6/14/2007

TETRA TECH

ALTERNATIVE PROCEDURE
REMEDIAL ACTION PLAN
FOR
AREA OF CONCERN 2

NAVAL SUPPORT ACTIVITY PANAMA CITY
PANAMA CITY, FLORIDA

COMPREHENSIVE LONG-TERM
ENVIRONMENTAL ACTION NAVY (CLEAN) CONTRACT

Submitted to:
Naval Facilities Engineering Command
Southeast
2155 Eagle Drive
North Charleston, South Carolina 29406

Submitted by:
Tetra Tech NUS, Inc.
661 Andersen Drive
Foster Plaza 7
Pittsburgh, Pennsylvania 15220

CONTRACT NO. N62467-94-D-0888
CONTRACT TASK ORDER 0326

JUNE 2007

PREPARED UNDER THE SUPERVISION OF:

Larry W Smith

LARRY SMITH, P.G.
TASK ORDER MANAGER
TETRA TECH NUS, INC.
TALLAHASSEE, FLORIDA

APPROVED FOR SUBMITTAL BY:

Debra M Humbert

DEBRA M. HUMBERT
PROGRAM MANAGER
TETRA TECH NUS, INC.
PITTSBURGH, PENNSYLVANIA

This document, *Alternative Procedure Remedial Action Plan for Area of Concern 2, Naval Support Activity Panama City, Panama City, Florida*, has been prepared under the direction of a Florida Registered Professional Engineer. The work and professional opinions rendered in this report were conducted or developed in accordance with commonly accepted procedures consistent with applicable standards of practice. This document was prepared for *Area of Concern 2, Naval Support Activity Panama City, Panama City, Florida*, and should not be construed to apply to any other site.

Tetra Tech NUS, Inc.
4012 Gunn Highway, Suite 140
Tampa, FL 33618
Certificate of Authorization No. 7988

Marilyn Koletzke
Professional Engineer
State of Florida License No. 50611
Expires: February 28, 2009

TABLE OF CONTENTS

SECTION **PAGE**

PROFESSIONAL ENGINEER CERTIFICATION ..... **iii**
ACRONYMS ..... **vi**
EXECUTIVE SUMMARY **ES-1**

1.0 INTRODUCTION **1-1**
1.1 PURPOSE AND SCOPE 1-1
1.2 SITE DESCRIPTION 1-1
1.3 SITE HISTORY 1-1
1.4 REPORT ORGANIZATION 1-2

2.0 PREVIOUS INVESTIGATION FINDINGS AND CONCLUSIONS **2-1**
2.1 LITHOLOGIC FINDINGS 2-1
2.2 GROUNDWATER AND AQUIFER CHARACTERISTICS 2-1
2.3 CONTAMINATED SOIL ASSESSMENT 2-1
2.3.1 Headspace Screening Analysis of Soil 2-1
2.3.2 Mobile Laboratory Analysis of Soil 2-2
2.3.3 Fixed-base Laboratory Analysis of Soil 2-2
2.4 CONTAMINATED GROUNDWATER ASSESSMENT 2-3
2.4.1 Mobile Laboratory Analysis of Groundwater 2-3
2.4.2 Fixed-Base Laboratory Groundwater Results 2-3
2.5 FREE PRODUCT 2-4
2.6 POTABLE WATER CONSIDERATIONS 2-4
2.7 SITE ASSESSMENT REPORT CONCLUSIONS AND RECOMMENDATIONS 2-4

3.0 REMEDIAL ACTION PLAN GOALS **3-1**
3.1 SOIL TARGET LEVELS 3-1
3.2 GROUNDWATER TARGET LEVELS 3-1
3.3 FREE PRODUCT TARGET LEVELS 3-1

4.0 CONTAMINANT DISTRIBUTION **4-1**
4.1 ESTIMATED MASS OF CONTAMINANTS IN SOIL 4-1
4.2 ESTIMATED MASS OF CONTAMINANTS IN GROUNDWATER 4-1
4.3 ESTIMATED MASS OF FREE PRODUCT 4-1

5.0 REMEDIAL ALTERNATIVE TECHNOLOGY SCREENING **5-1**
5.1 EVALUATION OF REMEDIATION ALTERNATIVES 5-1
5.1.1 Excavation and Dewatering 5-1
5.1.2 Bioremediation 5-2
5.1.3 AS/SVE 5-2
5.1.4 Chemical Oxidation 5-3
5.1.5 Dewatering and Dual-Phase Extraction 5-4
5.2 RATIONALE AND COSTS FOR SELECTED ALTERNATIVES 5-4

6.0 REMEDIAL ALTERNATIVES DESIGN **6-1**
6.1 CONTAMINATED SOIL REMOVAL 6-1
6.2 CONTAMINATED GROUNDWATER TREATMENT AND FREE PRODUCT REMOVAL 6-1
6.2.1 Free Product Recovery and Groundwater Treatment 6-2
6.2.2 Oil and Water Separation 6-2
6.2.3 Filtration, Off Gas and Polishing Treatment 6-3
6.3 BIO-REMEDIATION AND SITE RESTORATION 6-4
6.4 IMPLEMENTATION COST ESTIMATE AND SCHEDULE 6-4
6.4.1 Implementation Cost Estimate 6-4
6.4.2 Implementation Schedule 6-4

TABLE OF CONTENTS (Continued)

SECTION **PAGE**

7.0 REMEDIAL ACTION IMPLIMENTATION AND MONITORING 7-1
7.1 WELL ABANDONMENT AND REPLACEMENT WELL INSTALLATION 7-1
7.1.1 Well Abandonment 7-1
7.1.2 Replacement Monitoring Well Installation 7-1
7.2 SOURCE REMOVAL AND TREATMENT SYSTEM SAMPLING 7-2
7.3 DESIGNATION OF KEY AND PERIMETER MONITORING WELLS 7-2
7.4 REMEDIATION MONITORING PLAN 7-2
7.5 REMEDIATION COMPLETION AND REPORT 7-4

REFERENCES R-1

APPENDICES

A FREE PRODUCT MASS CALCULATIONS A-1
B REMEDIAL ALTERNATIVE COST ESTIMATE B-1
C DEWATERING AND EXCAVATION DESIGN SPECIFICATIONS C-1
D APRAP SUMMARY AND CHECKLIST D-1

TABLES

NUMBER

2-1 Soil Headspace Screening Results
2-2 Summary of Mobile Laboratory Screening Results for Soil
2-3 Summary of Fixed-Base Soil Analytical Results
2-4 Summary of Mobile Laboratory Screening Results for Groundwater
2-5 Summary of Fixed-Base Groundwater Analytical Results
2-6 Groundwater Elevation and Free Product Thickness Summary
3-1 Chemicals of Concern and Associated Selected Soil Cleanup Target Levels
3-2 Chemicals of Concern and Associated Groundwater Cleanup Target Levels
5-1 Comparison and Rational for Selected Remedial Alternatives
7-1 Proposed Monitoring Plan and Treatment System Sampling

FIGURES

NUMBER

1-1 Vicinity Map
1-2 Area Map
1-3 Site Base Map
2-1 Soil Boring Location Map
2-2 Monitoring Well Location Map
2-3 Fixed Base Soils Analytical Results
2-4 Fixed Base Groundwater Analytical Results
2-5 Approximate Limits of Free Product
6-1 Approximate Area of Excavation
6-2 Piping and Instrument Diagram
6-3 Dewatering System Trench Details
7-1 Remediation Monitoring Well Locations

ACRONYMS

AASTO	American Association of State Highway and Transportation Officials
ABB-ES	ABB Environmental Services, Inc.
APRAP	Alternative Procedure Remedial Action Plan
AS	Air Sparging
AST	Aboveground Storage Tank
AOC	Area of Concern
bgs	below ground surface
BTEX	Benzene, Toluene, Ethylbenzene and Xylene
cfm	cubic feet per minute
CLEAN	Comprehensive Long-term Environmental Action Navy
COCs	Contaminants of Concern
COWS	Coalescing Oil/Water Separator
CTO	Contract Task Order
DE	Direct Exposure
DO	Dissolved Oxygen
DOT	Department of Transportation
DPE	Dual-Phase Extraction
DPT	Direct Push Technology
DRO	Diesel Range Organics
DTW	depth-to-water
EDB	Ethyldibromide
EOD	Explosive Ordnance Disposal
F.A.C.	Florida Administrative Code
FDEP	Florida Department of Environmental Protection
FID	Flame Ionization Detector
FL-PRO	Florida Petroleum Range Organics
ft	Feet (Foot)
ft^2	Square Feet
ft^3	Cubic Feet
GAC	Granular Activated Carbon
GAG	Gasoline Analytical Group
GCTLs	Groundwater Cleanup Target Levels
GPM	gallons per minute
Hg	Mercury
HOA	Hand-On-Auto

ACRONYMS (Continued)

HSA	hollow stem auger
i	Hydraulic Gradient
ID	inside diameter
K	Hydraulic Conductivity
LE	Leachability
lbs	Pounds
µg/L	Micrograms per Liter
µm	micrometers
mg/kg	Milligrams per Kilogram
MNA	monitored natural attenuation
MTBE	Methyl Tertiary Butyl Ether
NADC	Natural Attenuation Default Concentration
NAVFAC SE	United States Naval Facilities Engineering Command Southeast
NSA	Naval Support Activity
n	Porosity
NEMA	National Electrical Manufacturers Association
NPDES	National Pollutant Discharge Elimination System
NWFWMD	North West Florida Water Management District
O&M	Operations & Maintenance
OVA	Organic Vapor Analyzer
PAHs	Polynuclear aromatic hydrocarbons
PARM	post-active remediation monitoring
P&IDs	process and instrumentation diagram
ppm	parts per million
PRP	Petroleum Remediation Product
psig	pounds per square inch gauge
PVC	Polyvinyl Chloride
RACR	Remedial Action Completion Report
RAP	Remedial Action Plan
RCRA	Resource Conservation and Recovery Act
ROI	Radius of Influence
SA	Site Assessment
SAR	Site Assessment Report
SCTLs	Soil Cleanup Target Levels
scfm	standard cubic feet per minute

ACRONYMS (Continued)

SOF	Special Operations Facility
SOP	Standard Operating Procedure
SVE	Soil Vapor Extraction
SVOC	Semivolatile organic compound
TEFC	Totally Enclosed, Fan-Cooled
TD	Total Depth
TOC	Top of Casing
TRPH	Total Recoverable Petroleum Hydrocarbons
TSD	Treatment, Storage and Disposal
TtNUS	Tetra Tech NUS, Inc.
USEPA	United States Environmental Protection Agency
USGS	United States Geological Survey
UST	Underground Storage Tank
VOC	Volatile Organic Compound
Vs	Seepage Velocity
yd^3	Cubic Yards

EXECUTIVE SUMMARY

Tetra Tech NUS, Inc. (TtNUS) has completed this Alternative Procedure Remedial Action Plan (APRAP) for Area of Concern (AOC) 2 Underground Storage Tank (UST) site located at the Naval Support Activity (NSA) Panama City, Panama City Beach, Florida. This APRAP was prepared in accordance with the requirements of Chapter 62-770, Florida Administrative Code (F.A.C.), and is being submitted to the Florida Department of Environmental Protection (FDEP) for approval.

TtNUS conducted the following tasks during the preparation of this APRAP:

- Reviewed the information gathered during the most recent sampling event.
- Evaluated remedial alternatives for soil, groundwater, and light non-aqueous phase liquids (free product) at AOC 2.
- Prepared an APRAP to provide guidelines for the removal, treatment, and disposal of free product petroleum-contaminated soil and groundwater.
- Specified a monitoring plan to track the progress of remediation at the Site.

This APRAP identifies remedial alternatives to remove free product and address site-related soil and groundwater contamination in accordance with the State of Florida target clean up levels defined by Chapter 62-770, F.A.C. Source removal including soil excavation, dewatering, and free product removal, augmented with bioremediation are the selected remedial alternatives. Based on the conceptual design presented, the estimated cost to implement this APRAP, including one year of monitoring, is $291,000.

1.0 INTRODUCTION

1.1 PURPOSE AND SCOPE

This APRAP was prepared by TtNUS for the Naval Facilities Engineering Southeast (NAVFAC SE) under Contract Task Order (CTO) 0326, for the Comprehensive Long-term Environmental Action Navy (CLEAN) III, Contract Number N62467-94-D-0888. This APRAP was prepared to evaluate and recommend treatment options for the petroleum contaminated soil and groundwater, and for the removal of free product present at the AOC 2 at NSA Panama City, Panama City Beach, Florida (hereafter referred to as the Site). In 2004, TtNUS performed a Site Assessment (SA) and completed a Site Assessment Report (SAR) for AOC 2 (TtNUS, 2004).

The purpose of this APRAP is to propose feasible remedial alternatives to address soil and groundwater contamination, and the removal of free product at the Site in a cost effective and timely manner. This APRAP provides a conceptual design for the selected alternatives in accordance with the requirements of Chapter 62-770, F.A.C.

1.2 SITE DESCRIPTION

NSA Panama City is located on the western shore of St. Andrew Bay in Panama City, Bay County, Florida at 30° 10' 25" latitude -85° 45' 23" Longitude, within Section 33 of Township 3 South, Range 15 West and Section 4 of Township 4 South, Range 15 West, in the Panama City Beach 7.5' Quadrangle Map of the United States Geological Survey (USGS), 1982. The location of NSA Panama City is shown on Figure 1-1 and a USGS Topographic map is included on Figure 1-2. The facility is bordered by US Highway 98 to the north, St. Andrew Bay to the east, State Road 292B (Magnolia Beach Road) to the south, and State Road 292, (Thomas Drive) to the west as shown on Figure 1-3.

AOC 2 is located in the developed area at the southern end of the facility and is bounded to the north by Skylark Drive and Solomans Drive and to the south and west by Alligator Bayou. Currently, the Site includes a large asphalt-paved parking lot surrounded by various office and storage buildings, the new Special Operations Facility (SOF) and the Explosive Ordnance Disposal (EOD) compound.

1.3 SITE HISTORY

As listed in the SAR (TtNUS, 2004), AOC 2 is the former location of a 420,000 gallon aboveground storage tank (AST), Fuel Oil Tank Number 11 (AST 11), and the associated transfer piping [ABB Environmental Services Inc. (ABB-ES) 1996]. AST 11 was part of a petroleum storage and distribution facility that included pump houses and a fuel dispensing station with other storage tanks.

AST 11 was constructed in 1943 and was originally used to store diesel fuel. Petroleum products were transferred to AST 11 from the South Dock via a 6-inch underground transfer line connected to a pump house at the South Dock. A smaller 3-inch transfer line connected AST 11 to a pump house located approximately 100 feet (ft) to the northwest of the tank (the current location of Building 543). A circular earthen berm spaced approximately 60 ft from the tank provided secondary containment.

The pump house associated with AST 11 was used to distribute fuel from AST 11 and tanks associated with the former fuel dispensing facility located approximately 200 ft to the northwest of AST 11 (the current location of Building 543). Two parallel 3-inch transfer lines distributed diesel fuel and gasoline from the pump house to the South Dock. Additional smaller diameter fuel lines may have been used to distribute fuel to other locations in the vicinity of AST 11.

Approximately 50,000 gallons of diesel fuel were reportedly released from the tank system in 1953. The exact location of the leak and whether or not the underground piping had failed is unknown. AST 11 was completely refurbished in 1957, including replacement of 28 bottom plates. The tank was then reportedly used to store gasoline, aviation fuel, diesel fuel, and waste oil. Numerous small leaks, primarily at the tank seams, were reported to have occurred both before and after the tank had been refurbished. In the mid 1960s, an estimated 10,000 gallons of product were released from ruptured fuel transfer lines located between the dock and storage tank. Following the rupture, seepage of product was observed in Alligator Bayou at the South Dock bulkhead.

AST 11 and the containment berm were removed in 1979. Reportedly, the bottom plates of the tank had completely deteriorated. The transfer piping from the tank wall to the containment berm was removed. The remaining piping was capped and abandoned in place. Based on utility drawings of the area, the fuel dispensing station and the fuel pump house were apparently removed after 1984. Building 400 was built in the area of the former fuel dispensing station. The former fuel dispensing station included two USTs, UST 12 and UST 13, which were removed in the early 1970s. No documentation is available for the condition of the tanks during removal. Building 543 has recently been constructed in the area of the former fuel pump house, and the SOF has recently been constructed near AOC 2 area.

1.4 REPORT ORGANIZATION

This APRAP is organized into seven sections. Below is a list of the sections and a brief description of their purpose:

Section 1.0	Introduction	Summarizes the report's purpose, scope, site information, and report organization.
Section 2.0	Previous Investigation Findings and Conclusions	Provides information from the approved SAR (TtNUS, 2004), and other investigations, and summarizes their findings and conclusions.
Section 3.0	Remedial Action Goals	Establishes the objectives and guidelines for the removal treatment and disposal of petroleum-contaminated soil, groundwater and free product.
Section 4.0	Contaminant Distribution	Estimates the mass of free product, contaminated soil and groundwater.
Section 5.0	Remedial Alternative Technology Screening	Presents the remedial alternatives, and determines the suitability for the Site, and develops budgetary costs for each.
Section 6.0	Remediation Alternatives Design	Presents the conceptual framework of the preferred remedial alternatives.
Section 7.0	Remedial Implementation and Monitoring	Establishes guidelines for the source removal as well as establishes procedures for reporting and monitoring after its completion and a monitoring plan to evaluate the effectiveness of the implemented treatment technologies.

2.0 PREVIOUS INVESTIGATION FINDINGS AND CONCLUSIONS

The following is a summary of the data and information presented in the SAR (TtNUS, 2004).

2.1 LITHOLOGIC FINDINGS

Site Lithology from the surface to approximately 30 ft below ground surface (bgs) consists of fine to medium grained sand, ranging in color from dark gray to brown to white. Review of reference literature suggests that representative effective porosity for this lithology is approximately 30 percent (Heath, 1983).

Detailed information pertaining to the Site lithology, geology and hydrogeology, and previous assessment activities were discussed in the initial Remedial Action Plan (RAP) for AOC 2 (TtNUS 2005). Soil boring logs and regional lithology information were provided in the SAR (TtNUS, 2004).

2.2 GROUNDWATER AND AQUIFER CHARACTERISTICS

Based on historical groundwater level data, depth-to-water (DTW) in the surficial aquifer ranges from approximately 1.5 to 6.0 ft bgs. The direction of groundwater flow in the surficial aquifer is to the south-southwest towards Alligator Bayou. From the SAR (TtNUS, 2004), hydraulic conductivity (K) and hydraulic gradient (i) are 11.5 ft/day or 4.06×10^{-3} cm/sec, and 0.007 ft/ft, respectively.

2.3 CONTAMINATED SOIL ASSESSMENT

The vertical and horizontal extent of petroleum impacted soil in the vadose zone has been assessed through soil vapor analysis, and supplemented with fixed-base soil confirmation analysis. These activities were completed during the soil boring investigations and monitoring well installations from 1998 through 2004 and described in the SAR (TtNUS, 2004). Soil boring locations used in previous assessment activities are presented on Figure 2-1.

2.3.1 Headspace Screening Analysis of Soil

During the SA field activities performed in May 1998, August 2000, and May 2002, the extent of soil contamination was determined by the advancement of soil borings and Organic Vapor Analyzer (OVA)-Flame Ionization Detector (FID) screening of soil samples. Soil headspace screening results are provided in Table 2-1.

2.3.2 Mobile Laboratory Analysis of Soil

Soil samples were submitted to a mobile laboratory from 2000 to 2003 for screening level analysis of benzene, toluene, ethylbenzene and xylene (BTEX), naphthalene, and methyl tertiary butyl ether (MTBE). None of the detected compounds exceeded their respective soil cleanup target levels (SCTLs). The mobile laboratory analytical results for soil are summarized on Table 2-2.

2.3.3 Fixed-base Laboratory Analysis of Soil

During the SA and Supplemental SA field investigations, 18 soil samples were submitted to a fixed-base laboratory for analysis (6 during 1998, 4 during 2000, 3 during 2002, and 5 during 2006). Analysis by United States Environmental Protection Agency (USEPA) Methods:
8260B for Volatile Organic Compounds (VOCs),
8270 SIM: Polynuclear Aromatic Hydrocarbon (PAHs)
8270C: Semivolatile Organic Compounds (SVOCs),
6010B: Resource Conservation and Recovery Act (RCRA) 4 Metals and Arsenic, and
Florida Petroleum Range Organics (FL-PRO): Total Recoverable Petroleum Hydrocarbon (TRPH)

A summary of the confirmation analytical results are presented below:

- Acenaphthene and MTBE concentrations exceed the Leachability (LE) Limits in samples collected from soil borings SB05, and SB06.

- Benzo(a)anthracene, and MTBE concentrations exceed the Residential Direct Exposure (DE), and the LE Limits in samples collected from soil borings SB05, and SB06.

- Benzo(a)pyrene concentrations exceed the Residential DE Limits in samples collected from soil borings SSB01, SSB03, SSB05, SSB09, SSB10, SSB14, B04, B10, B11, SB05, and SB06.

- Dibenzo(a,h)anthracene concentrations exceed the Residential DE Limits in samples collected from soil borings SSB01, SSB03, SSB09, SSB10, SSB14, B04, B10, B11, SB05, and SB06.

- Naphthalene, 1-methylnaphthalene, and 2-methylnaphthalene concentrations exceed the LE Limits in samples collected from soil borings SSB01, SB06, SB60, SB64, and SB65.

- Total Xylenes concentrations exceed the LE Limits in samples collected from soil borings SSB01, SSB03, SSB05, SSB09, SSB10, SSB14, SB05, and SB06.

- TRPH concentrations exceed the Residential DE, and LE Limits in samples collected from soil borings SSB01, B04, B10, B11, SB05, SB06, SB62, and SB64.

The results of the soil assessment indicate that there are petroleum-contaminated soils at the Site exceeding FDEP SCTLs. Based on soil screening data and the fixed-base laboratory results, the contaminants appear to be distributed throughout the vadose zone soils in the in the area depicted on Figure 2-3. Table 2-3 summarizes the fixed-base soil analytical results.

2.4 CONTAMINATED GROUNDWATER ASSESSMENT

The groundwater assessment performed during previous field investigations delineated the vertical and horizontal extent of petroleum contamination. Results from these investigations are described in the SAR (TtNUS, 2004). Monitoring well WHF-AOC2-MW07 has not been sampled since 1999 due to the presence of free product. The location of the monitoring wells included in these assessment activities are presented on Figure 2-2. Historical groundwater analytical information is summarized in the following sections.

2.4.1 Mobile Laboratory Analysis of Groundwater

Groundwater samples collected from 2000 to 2003 were submitted to and screened via a mobile laboratory for BTEX, naphthalene, and MTBE. The results of the groundwater screening analysis are discussed in the initial RAP for AOC 2 (TtNUS, 2005). The mobile laboratory analytical results for groundwater are summarized on Table 2-4.

2.4.2 Fixed-Base Laboratory Groundwater Results

Groundwater samples collected from 2000 to 2006 were submitted to and analyzed by a fixed-base laboratory for VOCs, PAHs, ethyldibromide (EDB), and lead. The results from the May 2002 through March 2005 groundwater sampling are summarized in the RAP for AOC 2 (TtNUS, 2005). Results from the March 2006 fixed-base groundwater sampling indicated an exceedance of the groundwater cleanup target levels (GCTL) for TRPH in monitoring wells PCY-AOC2-P01 and PCY-14-MW02S. None of the other constituents analyzed indicated an exceedance of the GCTLs.

The fixed-base laboratory analytical results for 2006 and the extent of groundwater GCTL exceedances are depicted on Figure 2-4. Historical groundwater laboratory analytical results are presented in Table 2-5.

2.5 FREE PRODUCT

Free product thickness was gauged at AOC 2 in May 2003, and again in March 2004. As discussed in the SAR (TtNUS, 2004) and the initial RAP (TtNUS, 2005), the measured thickness of free product ranged from 0.01 to 0.62 ft, exceeding the FDEP reportable limit of 0.01 ft in the following monitoring wells, PCY-AOC2-MW07 and PCY-14-2S, and piezometers PCY-AOC2-P02, PCY-AOC2-P03, PCY-AOC2-P07, PCY-AOC2-P08, PCY-AOC2-P09, PCY-AOC2-P10, PCY-AOC2-P13, PCY-AOC2-P14, PCY-AOC2-P17, and PCY-AOC2-P20. The approximate extent of free product at the Site, as delineated during these assessment activities, is presented on Figure 2-5. Historical free product measurements and DTW measurements are presented in Table 2-6.

2.6 POTABLE WATER CONSIDERATIONS

A review of potable well information, physical features, and sensitive receptors was completed during the preparation of this APRAP. Resources used to gather this information include the North West Florida Water Management District (NWFWMD) Well Construction Permitting System Permit Listing and the Bay County Property Appraiser's office parcel and aerial photography.

According to the NWFWMD there are no public water supply wells that are within ¼ miles of the Site. One private domestic use well is approximately 0.35 miles southwest of the Site at 6436 Summer Oak Road. The next closet potable well is approximately 0.54 miles south west at 2413 Valley Oak Court. There are 11 potable wells within one mile of the Site, two (2) of which are located at NSA Panama City. The nearest surface water body is Alligator Bayou which is 200 ft southwest of the Site. As discussed in Section 2.2, groundwater at the Site flows toward the south-southwest and the water body most likely to be impacted is Alligator Bayou.

2.7 SITE ASSESSMENT REPORT CONCLUSIONS AND RECOMMENDATIONS

Based on the data collected and evaluated during the SA for AOC 2, the conclusions were summarized in the SAR (TtNUS, 2004) and the initial RAP (TtNUS, 2005) as follows:

- Free phase petroleum product (thickness of 0.01 ft or greater) was detected in two monitoring wells and ten piezometers at the Site.

- The horizontal and vertical extent of free product has been delineated.

- Laboratory analytical results from soil samples collected during the SA indicated concentrations of petroleum related contaminants of concern (COCs) exceeding the SCTLs specified in Chapter 62-770, F.A.C.

- Laboratory analytical results from groundwater samples collected during the SA indicated concentrations of petroleum related COCs exceeding the GCTLs specified in Chapter 62-770, F.A.C.

- The laboratory analytical results from the groundwater sample collected from PCY-AOC2-MW06D indicates benzo(b)fluoranthene was detected at a concentration exceeding the natural attenuation default concentration (NADC). All other laboratory analytical results from groundwater samples collected during the SA indicate that all other concentrations of petroleum product COCs are below the NADCs specified in Chapter 62-770, F.A.C.

- The horizontal and vertical extent of petroleum-impacted soil within the vadose zone has been delineated. According to the initial RAP for AOC 2 (TtNUS, 2005), the "excessively contaminated soil" plume is approximately 44,392 square ft (ft^2) in area and extends to a depth of approximately 4 ft bgs.

- The horizontal and vertical extent of petroleum impacted groundwater exceeding the GCTLs has been delineated. This dissolved hydrocarbon plume is approximately 89,660 ft^2 in area and extends to a depth of approximately 30 ft bgs.

- The horizontal and vertical extent of petroleum impacted groundwater exceeding NADCs has been delineated. This dissolved hydrocarbon plume is approximately 7,850 ft^2 in area and extends to a depth of approximately 30 ft bgs.

- Exposure pathways to human receptors via surface water or supply wells are possible.

Based on the hydrogeological and analytical data presented in the SAR (TtNUS, 2004), the initial RAP (TtNUS, 2005), and the requirements set forth in Chapter 62-770, F.A.C., TtNUS recommended that an APRAP be prepared to address free product and petroleum-impacted soil and groundwater at the Site.

3.0 REMEDIAL ACTION PLAN GOALS

The objective of this APRAP is to present proven reliable and cost-effective methods for the removal of free product and subsequent remediation of petroleum related contaminated soil and groundwater and achieve the target cleanup levels in accordance with State of Florida standards set forth in Chapter 62-770, F.A.C.

The goals and expected accomplishments of the APRAP include:

- Identify practicable methods to remove free product from the source area in accordance with Chapter 62-770.300, F.A.C.
- Select remediation alternatives that will reduce hydrocarbon constituents in soil to below the State of Florida target levels identified in Table II, Chapter 62-777, F.A.C.
- Select remediation alternatives that will reduce hydrocarbon constituents in groundwater to below the State of Florida NADSC levels identified in Tables I, Chapter 62-777, F.A.C.
- Monitor the overall effectiveness of the remedial action in removing free product and reducing the levels of petroleum hydrocarbons in the soil and groundwater at the Site.

The following sections specify the target levels for the site-specific COCs at AOC 2.

3.1 SOIL TARGET LEVELS

Table 3-1 presents the soil remediation goals for the site-specific COCs, based on the lower of the Residential DE or the LE SCTLs, as listed in Table II of Chapter 62-777, F.A.C.

3.2 GROUNDWATER TARGET LEVELS

Table 3-2 presents the groundwater remediation goals for the site-specific COCs, based on the Groundwater Criteria GCTLs, as listed in Table I of Chapter 62-777, F.A.C.

3.3 FREE PRODUCT TARGET LEVELS

The goal of this remedial action is to remove free product in excess of 0.01 ft. Chapter 62-770, F.A.C., defines free product as petroleum or petroleum product in excess of 0.01 ft in thickness, measured at its thickest point, floating on surface water or groundwater.

4.0 CONTAMINANT DISTRIBUTION

4.1 ESTIMATED MASS OF CONTAMINANTS IN SOIL

The approximate mass of contaminants present in the soil at the Site was presented and discussed in the initial RAP for AOC 2 (TtNUS, 2005). A summary of these estimates is as follows:

- Total volume of contaminated vadose zone soil = 177,568 cubic feet (ft^3)
- The average headspace concentration within the Site = 1,958 mg/kg
- The estimated mass of hydrocarbons in soil is approximately 36,000 pounds (lbs).

4.2 ESTIMATED MASS OF CONTAMINANTS IN GROUNDWATER

The estimated mass of contaminants in groundwater, based on the GCTL and NADC criteria, was discussed in the initial RAP for AOC 2 (TtNUS, 2005). It was estimated that the volume of groundwater within the saturated zone that exceeds the GCTLs is approximately 5.2 million gallons and contains 5,622 lbs of contaminants.

Analytical data presented in the SAR (TtNUS, 2004), indicated that the NADC Criteria was exceeded only in the intermediate horizon, in one monitoring well, PCY-AOC2-MW-06D. As described in the initial RAP (TtNUS, 2005), the estimated mass of hydrocarbons within the saturated zone exceeding the NADCs is 438.25 lbs.

4.3 ESTIMATED MASS OF FREE PRODUCT

The quantity of free product present at the Site was calculated from average thickness gauged during the 2003 and 2004 sampling events. For the area of delineated free product as presented on Figure 2-5, the average depth is calculated to be 0.29 ft. The area of free product was measured at approximately 2,890 ft^2, and the average soil porosity is assumed to be 0.30. Based on these measurements and assumptions the quantity of free product is calculated to be 1,963 gallons, 263 ft^3, or 14,753 lbs using the formula shown below:

Total free product mass = A * T * n * Dfp

where:

A = Total area of plume (ft^2) =2,980 ft^2

T = Average observed thickness (ft) = 0.29 ft

n = Porosity = 0.30

Dfp = Density of free product (56.2 lb/ft^3)

Calculations for the estimated mass of free product are provided in Appendix A.

5.0 REMEDIAL ALTERNATIVE TECHNOLOGY SCREENING

Potential remedial technologies and process alternatives for treating soils, groundwater, and free product removal at AOC 2, were identified and evaluated based on their ability to meet the clean-up goals. Treatment alternatives are selected based on their potential effectiveness, reliability, implementability, cost, and overall suitability to treat the specific conditions at the Site. Table 5-1 contains a summary of the remedial alternatives applicable to AOC 2.

5.1 EVALUATION OF REMEDIATION ALTERNATIVES

Based on the SAR (TtNUS, 2004), data, and estimated volumes of free product and soil and groundwater exhibiting hydrocarbon contamination at the Site as defined in Chapter 62-770, F.A.C., TtNUS investigated several methods for removal of free product and the treatment of soil and groundwater at the Site. The following technologies were identified as possible treatment alternatives in this APRAP:

- Excavation and Dewatering
- Bioremediation
- Air Sparge with Soil Vapor Extraction (AS/SVE)
- Chemical Oxidation
- Dewatering and Dual-Phase Extraction (DPE)

The following sections briefly discuss each of these remedial alternatives with respect to their suitability for remediation at this Site.

5.1.1 Excavation and Dewatering

Excavation and dewatering, as applied to the Site involves the physical removal and treatment and off-site disposal of impacted soils with hydrocarbon constituents exceeding the lower of the Residential DE or the LE SCTLs, as listed in Table II of Chapter 62-777, F.A.C. To capture the entrained hydrocarbons within the soil, excavation would need to extend below the vadose zone to a depth below the water table. It is expected that an average depth of 6 ft would be required to remove the majority of the impacted soil at the Site.

As discussed in Section 2.2, the surficial aquifer water table ranges from approximately 1.5 to 6.0 ft bgs. Water will be present within the excavation once soils below the water table are removed. The quantity of water entering the excavation will increase as the excavation extends deeper into the surficial aquifer. As described in Section 4.3 there is an estimated 1,963 gallons of free product present at the Site. The

mixture of free product and water entering the excavation is known as dual-phase. This Dual-phase mixture would need to be removed and treated to facilitate the effectiveness of the excavation process.

The quantity of water entering the excavation depends on the duration of time required to complete the excavation. Based on the area of free product at the Site and the soil conductivity provided in the SAR (TtNUS, 2004), it is estimated that an average of 240 gallons per minute (GPM) of free product and contaminated groundwater may need to be removed from the excavation. The time required to remove the impacted soils within the area of free product, would be five (5) days, thus, the quantity of water to be removed from the excavation is conservatively estimated to be approximately 1.7 million gallons.

Soils would be stockpiled before off-site transportation to allow field analytical screening and drainage. Sample analysis from stockpiled soil would be used to confirm achievement of the APRAP cleanup goals. Saturated soils would be allowed to drain into the excavation where the excess dual-phase liquid would need to be drawn off, separated, and treated. As the quantity of dual-phase liquid would likely be too great to be transported off-site by a vacuum truck, phase separation of the dual-phase liquid would be required. Soils and sediments would need to be stored for transport and treatment off-site, while contaminated groundwater water would need to be treated to compliance National Pollutant Discharge Elimination System (NPDES) standards and returned to the Site. Other debris generated during excavation would be loaded, and transported to an off-site facility for disposal.

5.1.2 Bioremediation

Bioremediation is an in-situ remediation technology that uses microorganisms to biodegrade organic constituents adsorbed to soils in the unsaturated zone. In bioremediation, naturally occurring organisms are introduced to enhance biodegradation of organic constituents. In-situ groundwater bioremediation can effectively degrade organic constituents which are dissolved in groundwater and adsorbed onto the aquifer matrix.

Generally, bioremediation requires a mechanism for stimulating and maintaining microorganism activity. The mechanism delivers one or more of the following: an electron acceptor such as oxygen, nutrients such as nitrogen, and an energy source such as carbon. Electron acceptors and nutrients are two of the most critical components of the bioremediation delivery system. Bioremediation with respect to the Site can be effective as an additional measure implemented to augment other treatment technologies.

5.1.3 AS/SVE

Air Sparge with Soil Vapor Extraction can be used to remediate groundwater containing dissolved petroleum hydrocarbons. The technology involves injecting air under pressure into the contaminated

aquifer, thereby increasing the mass transfer of the dissolved contaminants into the air bubbles that migrate through the soil to volatilize contaminants within the vadose zone. Air supplied to the contaminated zone also stimulates indigenous biodegradation of less volatile petroleum constituents through oxygen recharge. The volatilized vapors are then extracted from the soil through screened wells by a vacuum pump, into granular activated carbon (GAC) chambers where it is treated before discharge into the atmosphere.

This technology has proven effective in the remediation of groundwater contaminated with petroleum hydrocarbons in sandy soils. The advantages of AS/SVE over other active remediation technologies are a minimal environmental impact associated with in-situ treatment of existing soils. AS/SVE in groundwater can be an economical approach to in-situ groundwater remediation.

The limitations of AS/SVE technology with respect to AOC 2 is the presence of free product on the Site and the high percentage of semi-volatile hydrocarbons within the vadose zone. Semi-volatile hydrocarbons are less likely to be volatilized with AS/SVE technology. There are also capital expenditures associated with AS/SVE system equipment, and continued expense associated with Operation and maintenance (O&M).

5.1.4 Chemical Oxidation

In-situ chemical oxidation requires the injection of liquid chemical formulations into the contaminated portion of the aquifer. Two reactive compounds commonly used for in-situ oxidation of organic contaminants have been identified as Fenton's reagent and potassium permanganate.

In Fenton's reagent, hydrogen peroxide reacts with ferrous iron to produce the hydroxyl radical, an oxidizer. The hydroxyl radical reacts with organic compounds to produce carbon dioxide and water. When reacted with hydrocarbons (C_6H_2), hydrogen peroxide (H_2O_2) gives off heat energy (exothermic) and is reduced to carbon dioxide (CO_2) and water (H_2O). The chemical oxidation of hydrocarbons with hydrogen peroxide is characterized by the following reaction:

$$\mathbf{C_6H_2 + 15\ H_2O_2 \rightarrow 6\ CO_2 + 18\ H_2O}$$

If potassium permanganate is used instead of Fenton's reagent, then the potassium permanganate ion, rather than hydrogen peroxide, is used as the reagent. The reaction may result in a temporary exceedance of the secondary groundwater standards for color, total dissolved solids, manganese, and pH. Treatability testing is typically required to verify the effectiveness of in-situ chemical oxidation.

Chemical oxidation can be an effective means of remediation contaminants that are difficult to reach by less expensive technologies. Due to the Site's proximity to Alligator Bayou, and groundwater flow characteristic within the Site, oxidant recovery may be required. Due to the quantity of oxidant required to threat the contamination at the Site and the material costs, this technology is not currently considered to be the most cost effective. However, should subsurface contaminants resist other treatment technologies, chemical oxidation may be employed at the Site.

5.1.5 Dewatering and Dual-Phase Extraction

The objective of DPE is to extract contaminated groundwater, free product, and hydrocarbon vapor from the subsurface aquifer (USEPA, 2004). This approach has several benefits compared to other free product recovery methods. A single pump is used to remove contaminated groundwater and free product, a cone of depression is formed at the air/oil interface or the air/water interface. Smearing of the free product zone is minimized and vapor-phase hydrocarbons and mobile free product are collected simultaneously.

Two conceptual approaches to DPE are through well points, and through a trench or sump. Well points have the advantage of filtering particulate and large suspended material before it enters the treatment system, while the disadvantage is that it can pull contamination deeper into the subsurface soils causing the plume to smear. Trench and sumps have the advantage of global removal of all suspended material within the groundwater, and the disadvantage of presenting a multi-phase effluent of oils, particulate and contaminated water requiring separation and treatment. DPE as applied utilizing drains or gravel-filled trenches are typically limited to sites with water tables less than 20 ft deep and preferably closer to 10 ft deep (USEPA, 1996).

Duel-phase extraction as applied to the Site is required to facilitate excavation activities. A temporary DPE system would be required to separate, store, treat, transport or discharge dual-phase liquids during the excavation of contaminated soils.

5.2 RATIONALE AND COSTS FOR SELECTED ALTERNATIVES

Based on a review of the advantages, disadvantages, COCs, implementability, and costs considerations, TtNUS recommends free product and soil removal through excavation, supplemented with bioremediation augmentation and a dual-phase treatment system, as the remedial alternatives for AOC 2.

Excavation of the soil and the removal of free product and contaminated groundwater will be implemented at the Site. AS/SVE was not chosen due to the high capital cost of equipment, continuing expenditures incurred with O&M, and the limited impact that this technology has on treating free product and

semivolatile compounds. Chemical oxidation was eliminated based on site conditions and the high material cost associated with this alternative. Should however, subsurface contaminants resist the selected treatment alternatives, chemical oxidation may be employed at the Site.

6.0 REMEDIAL ALTERNATIVES DESIGN

As discussed in Section 5.0, the selected remedial alternatives for remedial action implementation at AOC 2 include the combination of free product/source removal via excavation and on-site dual-phase treatment of free product and groundwater. The proposed source removal/dual-phase design was developed based on knowledge of site lithology, soil permeability and COC characteristics.

The following sections of this APRAP describe the detailed design of the preferred remedial alternatives.

6.1 CONTAMINATED SOIL REMOVAL

Prior to excavation activities, the limits of excavation shall be surveyed and staked in the field. The designated areas shall be flagged and boundaries shall be established by florescent yellow caution tape to define the exclusion zone. Prior to beginning any excavation activities or any intrusive work, the designated areas shall be checked for any subsurface structures, utility lines, and other potential interference. A professional survey to verify locations of site utilities was not conducted for this report; however, active or inactive subsurface obstructions may include electrical lines, utility piping, gas distribution, etc. Soils that are identified as contaminated through field screening will be transported off-site for thermal treatment, while uncontaminated soils will be retained for backfill and site restoration. The approximate area of excavation is presented on Figure 6-1.

The total depth of the source removal excavation is anticipated to be 10 ft bgs. Soil removed from the area of free product will be stockpiled on plastic sheeting to allow for drainage back into the excavation. Field screening will be performed on the stockpiled soils using an OVA equipped with a FID. Soil screening will identify the presence of free product within the vadose zone. Soil samples collected from the stockpile will be submitted to an off site laboratory and analyzed for VOCs, PAHs, and TRPH. Once stockpiled soils have had sufficient time to reach a suitable moisture level; they will be loaded and transported off site. Contaminated soils identified through field screening will be treated and disposed off-site at an approved treatment, storage, disposal (TSD) facility. Uncontaminated soils will be retained on-site for backfill and site restoration.

6.2 CONTAMINATED GROUNDWATER TREATMENT AND FREE PRODUCT REMOVAL

As discussed in Section 4.3, the area of free product was calculated to be approximately 2,890 ft^2. To recover the majority of the free product, the excavation will extend to a depth below the seasonal low water table. Based on measurements made during the previous SAs, it is estimated that the majority of free product can be recovered by excavating to a depth greater than 6 ft (up to 10 ft) bgs. Soil

excavation below the water table will necessitate the incorporation of dewatering to facilitate remediation. Dual-phase liquid removed from the excavation will be separated by a temporary water treatment process that will remove contaminants from the extracted water before the water is discharged to existing storm water or sanitary sewer facilities. Because the characteristics of the water within the excavation area is currently undefined, a conservative process required to treat the dual-phase liquid is proposed.

The proposed dual-phase treatment system will include: an interceptor trench with submersible pumps cased inside screened sump wells, discharging into a coalescing oil/water separator augmented with chemical coagulant, discharging to a settling and holding tank, before treatment by an air stripper and activated GAC polishing. The following sections outline the detail and function with respect to the proposed treatment methodologies for managing contaminated groundwater and free product present in the area of excavation. A graphic depiction of the on-site water treatment system is presented in the process and instrumentation diagram (P&ID) provided in Figure 6-2.

6.2.1 Free Product Recovery and Groundwater Treatment

The objective of this remedial process is to effectively remove free product from the Site. As the excavation proceeds, free product present in the excavation area will be skimmed from the groundwater through the use of submersible pumps encased in sumps. A trench will be excavated along the southwest boundary of the extent of free product. Two sumps will be placed in the trench containing submersible pumps. These pumps will be housed in screened pipe, to allow for repositioning throughout the duration of the excavation activities. In the event that the quantity of groundwater flow is in excess of the capacities of vacuum tank trucks, onsite hydraulic controls, including dewatering and treatment system will be employed. If hydraulic control of the contaminated region is deemed necessary, then skimmers will be located in trenches along the full width of the plume at its downgradient edge (USEPA, 1996). The location and construction of the skimming and dewatering trench along with a sump detail is provided in Figure 6-3.

6.2.2 Oil and Water Separation

Extracted product and water will be pumped into a coalescing oil/water separator (COWS) where the initial phase of free product segregation will be performed. The COWS will contain packing material that facilitates the removal of oil within the groundwater. The capacity of the COWS will be sufficient to treat a minimum of 300 GPM, and be effective at removing oil droplets 25 micro meters (μm) in size and larger. An oil coalescing agent will be added through a metered chemical feed pump into the COWS to increase oil separation in the process stream.

Free product removed in the COWS will be transferred to a holding tank for storage and disposal off site. The free product holding tank will be equipped with level sensors and dewatering pump interlocks to prevent storage tank overflow into sensitive system components. Effluent from the COWS will be piped to a weir settling tank to provide for solids deposition and further skimming.

The weir settling tank will be of sufficient size to provide for an adequate residence time to remove solids from the process stream. Solids will be collected in the hopper end of the weir tank to be transferred to the free product holding tank for storage and disposal off site. The weir tank will have a manual skimming mechanism on the effluent end to provide for additional oil removal. Oils removed by the manual skimming mechanism will be transferred to the free product and sludge holding tank for storage and disposal off site.

6.2.3 Filtration, Off Gas, and Polishing Treatment

The extracted water effluent from the weir tank will be pumped through a bag filter to remove fugitive fine particulate before entering the air stripper holding tank. The stripper holding tank will be equipped with level float switches interlocked with the dewatering sump and transfer pumps to prevent holding tank overflow.

A low profile counter current stainless steel air stripper will be interlocked with the holding tank float switch controls to engage the strippers transfer pump and air blower. Air intake ducts will be screened and filtered to prevent ambient air particulate from fowling the trays. The blower will be capable of providing an air flow of at least 2,000 cubic feet per minute (cfm), and the stripper's sump capacity will be at least 500 gallons to maintain sufficient turbulence. Pressure sensing interlocks will be provided on the air stripper's influent and effluent duct to shut down the remediation system in the event of tray fowling or blower malfunction.

Process water effluent from the air stripper will be transferred to two 3,000 lb liquid phase GAC filters that will be piped in parallel. These filters will polish the liquid effluent by removing the dissolved contaminants from the process stream before it is discharged to the on site storm water or sanitary sewer facilities. Water discharged from the system will be in compliance with local sanitary sewer discharge requirements or NPDES standards for organic and inorganic constituents as well as 96-hour acute toxicity. Air stripper vapor effluent will be treated by a 3,000 lb GAC adsorption chamber to reduce the vapor emissions to comply with FDEP's 13.7 lb/day limit.

6.3 BIO-REMEDIATION AND SITE RESTORATION

When on site screening and laboratory analysis confirm that the excavation has removed the soil in the vadose zone containing free product, source removal will be terminated. Before backfilling is commenced, a bio-remediation agent, "PRP" (Petroleum Remediation Product), from Universal Remediation, Inc. out of Pittsburgh, Pennsylvania will be applied to the bottom of the excavation. This bio-agent comes in a powder from and will bind with the remaining hydrocarbon contaminants and promote aliphatic and aromatic compound reduction and promote natural bio-degradation of any residual product remaining after the excavation. Approximately five gallons of the PRP powder will be applied to the bottom of the excavation. Information on the PRP product is provided in Appendix C.

Clean soil removed from the excavation may be used in conjunction with clean fill material transported to the Site for backfill. Because the excavation is currently covered with an asphalt parking lot, backfill will be placed and compacted as per American Association of State Highway and Transportation Officials (AASTO) standards before the surface is restored to its original or intended site conditions.

6.4 IMPLEMENTATION COST ESTIMATE AND SCHEDULE

6.4.1 Implementation Cost Estimate

It is estimated based on the site characteristics and selected alternatives outlined in previous sections, the estimated costs associated with the selected remedial alternatives for the Site will be $291,000. This estimate includes all required sampling and analysis to complete one year of monitoring. A contingency of 25% is included and represents potential additional costs associated with an excavation below the current projected depth of 10 ft bgs.

A breakdown of the estimated costs of the remedial alternatives implementation is included in Appendix B.

6.4.2 Implementation Schedule

The time required to conduct the source removal is estimated to be 30 days. This includes 5 days of site prep work, 20 days of excavation and dewatering, and 5 days of backfill and site restoration. A detailed breakdown of the time estimate and excavation schedule required to complete this remedial action is presented in Appendix C.

7.0 REMEDIAL ACTION IMPLEMENTATION AND MONITORING

The following section establishes guidelines for remedial action implementation and procedures for reporting and monitoring after completion of the proposed remedial action.

7.1 WELL ABANDONMENT AND REPLACEMENT WELL INSTALLATION

Due to recent construction activities at the Site, many of the previously existing monitoring wells have been destroyed and as a result of the proposed excavation activities, additional well abandonment will be required.

7.1.1 Well Abandonment

Because of their location within the boundaries of the proposed excavation area, several existing monitoring wells and piezometers will need be abandoned. Three (3) 2-inch inside diameter (ID) monitoring wells (PCY-AOC2-MW07, PCY-14-MW02S, and PCY-14-MW02D) with an average total depth of 15 ft bgs and approximately 20 1-inch ID piezometers (PCY-AOC2-P01 through PCY-AOC2-P20) with an average total depth of 10 ft bgs will be abandoned via the tremie method. This includes pressure grouting from total depth (TD) to top of casing (TOC) under the supervision of a certified driller.

7.1.2 Replacement Monitoring Well Installation

Prior to the commencement of remediation activities and to maintain a representative characterization of site conditions, installation of eight (8) new/replacement monitoring wells is proposed. The proposed locations of the eight wells, designated as PCY-AOC2-MW30 through PCY-AOC2-MW37, are depicted in Figure 7-1.

The well construction of the replacement monitoring wells will be as follows: The new monitoring wells will be installed with a truck mounted drill rig using 4.25-inch ID hollow stem auger (HSA). These wells will be constructed of 2-inch ID, flush-threaded, schedule 40 polyvinyl chloride (PVC) riser and 0.010-inch slot well screen with a 6-inch point cap. The TD of the wells will range from approximately 12 to 15 ft bgs. The wells will be installed with 10 ft screen sections positioned to straddle the water table.

The annulus around each well will be backfilled to approximately 1 to 2 ft above the top of the screen with the U.S. Standard Sieve size 20/40 silica sand, followed by a 1-ft 30/65 fine sand seal. The remainder of the annulus will be grouted to just below TOC with Type 1 Portland cement/bentonite slurry. Each well will be secured with a locking, watertight cap within an 8-inch diameter steel manhole. The manhole was set in a 24-inch square concrete apron finished slightly above grade.

7.2 SOURCE REMOVAL AND TREATMENT SYSTEM SAMPLING

During source removal activities, the process treatment system effluent will be sampled for NPDES parameters and air emissions standards. During the first week of operation, remediation system monitoring and operating parameters will be collected daily to insure efficient and continuous operation of the treatment system. After the first week, system measurements including hydrocarbon concentrations between GAC vessels and the air stripper vapor extraction effluent stack will be taken weekly throughout the duration of source removal activities. These samples will be analyzed using USEPA Method TO-18.

Soil confirmation samples will be collected from the bottom and the four side walls of the excavation to determine the effectiveness of the source removal. These samples will be analyzed for TRPH via FL-PRO.

7.3 DESIGNATION OF KEY AND PERIMETER MONITORING WELLS

Key monitoring wells selected to monitor the impact of the source removal activities in the area of free product include the following five (5) wells: PCY-AOC2-MW8, PCY-AOC2-MW11, PCY-AOC2-MW13, PCY-AOC2-MW30, and PCY-AOC2-MW31.

Selected perimeter monitoring wells located outside the extent of source removal activities include the following seven (7) wells: PCY-AOC2-MW10, PCY-AOC2-MW32, PCY-AOC2-MW33, PCY-AOC2-MW34, PCY-AOC2-MW35, PCY-AOC2-MW36, and PCY-AOC2-MW37.

7.4 REMEDIATION MONITORING PLAN

Prior to the commencement of remediation activities a set of baseline groundwater samples will be collected from selected key and perimeter monitoring wells. During this sampling event, baseline groundwater conditions will be established through laboratory analysis using USEPA Method 8021 for VOCs, USEPA Method 8310 for PAHs, and FL-PRO for TRPH. Groundwater sampling will be conducted per FDEP Standard Operating Procedures (SOP).

Following source removal activities, a Post-Active Remediation Monitoring (PARM) plan will be initiated to monitor the effectiveness of the remedial action. The PARM will be submitted to FDEP for review and approval. The contents of this plan will be in accordance with 62-770.750 F.A.C and monitoring will continue for a minimum of one year.

Sampling of groundwater from the key and perimeter monitoring wells (discussed in Section 7.3) will be conducted quarterly to document the affect of the remedial action on the groundwater plume following the completion of remedial activities. The groundwater samples will be analyzed using USEPA Method 8021 for VOCs, USEPA Method 8310 for PAHs, and FL-PRO for TRPH.

Key monitoring wells will be sampled during the baseline groundwater sampling event and quarterly for a period of one year thereafter. Perimeter monitoring wells will be sampled during the baseline groundwater sampling event and the annual event.

The objectives PARM program are as follows:

- To monitor the overall effectiveness of the source removal in reducing the levels of petroleum hydrocarbons in the groundwater at the Site;
- To delineate the migration of contaminants at the Site;
- To assess the need for further remedial action.

The results of quarterly sampling event will be summarized in quarterly PARM reports. Each PARM report will summarize the event activities and will contain the following information:

- Sampling event date.
- Summary of the analytical results from the sampling event.
- Estimated change in concentration of hydrocarbon pollutants present at the Site.
- Cumulative mass of hydrocarbon present at the Site.
- Free product measurements if any, present in monitoring the wells.
- Conclusions as to the effectiveness of the alternative remedial treatment and recommendations on further monitoring and operations of the system.

Table 7-1 provides a summary of the PARM plan and treatment system sampling including sampling frequency and parameters.

7.5 REMEDIATION COMPLETION AND REPORT

Following the implementation of the remedial action described in this APRAP, a Remedial Action Completion Report (RACR) will be prepared and submitted to FDEP. The report will summarize the remediation activities and contain the following information:

- Remedial activities commencement date.
- Quantity of soils and free product removed from the Site.
- Estimated volume of free product recovered by the DPE treatment system
- Hydrocarbon constituent concentrations in recovered vapors
- Cumulative mass of hydrocarbon removed by the DPE system
- The cumulative mass of free product recovered by the DPE system in comparison with the estimated cumulative mass of free product present (see Section 4.0).
- Summary of DPE treatment system operational parameters.
- Free product measurements, if any, present in selected monitoring wells.
- Conclusions as to the effectiveness of the remedial action/treatment alternative.

The monitoring data detailed in Section 7.4 will be used to determine if the objectives of the APRAP have been met (i.e., free product thickness is less than 0.01 ft). If the monitoring data indicates that the cleanup goals are not being met as specified in the APRAP and groundwater concentrations are not approaching monitored natural attenuation (MNA) levels, additional remedial action may be required.

If the source removal is successful in removing the free product from the site, and free product is not present for two consecutive quarters following the source removal and groundwater concentrations are either at or approaching MNA levels, then a recommendation (in the RACR) will be made to proceed to the subsequent action to address remaining soil and groundwater contamination if needed.

REFERENCES

1. ABB Environmental Services, Inc., 1996. *Remedial Action Plan Facility 325*, Coastal System Station Panama City, Panama City.

2. FDEP (Florida Department of Environmental Protection), 1998. *Guidelines for Assessment and Source Removal of Petroleum Contaminated Soil*, May.

3. FDEP, 1999. Florida Administrative Code, Petroleum Contamination Site Cleanup Site Criteria, Chapter 62-770.

4. FDEP, 2005. *SOP 001/01* (effective April 10, *2002, revised February 1, 2004) and SOP PCS-005 Variances and Clarifications to the Groundwater Sampling Standard Operating Procedure for Bureau of Petroleum Storage Systems Sites (BPSS), May.*

5. Heath, R., 1983, *Basic Groundwater Hydrology*, USGS Water Supply Paper 2220, 84 pp.

6. Tetra Tech NUS, Inc., *Site Assessment Report*, Naval Support Activity Panama City, Panama City Florida, May, 2004.

7. Tetra Tech NUS, Inc., *Remedial Action Plan*, Naval Support Activity Panama City, Panama City Florida, March, 2005

8. USEPA, 1995. *How to Evaluate Alternative Cleanup Technologies For Underground Storage Tank Sites, A Guide For Corrective Action Plan Reviewers*, USEPA 510-B-95-007.

9. USEPA (U.S. Environmental Protection Agency), 1996. *How To Evaluate Alternative Recover Free Product at Leaking Underground Storage Tank Sites, A Guide For State Regulators*, USEPA 510 R 96 001.

10. USGS (United States Geological Survey), 1982. Panama City, FLA., Quadrangle 7.5 Minute Series, Topographic Quadrangle Maps of Florida: scale 1:24,000.

TABLES

TABLE 2-1
SOIL HEADSPACE SCREENING RESULTS
AREA OF CONCERN 2 REMEDIAL ACTION PLAN
NAVAL SUPPORT ACTIVITY PANAMA CITY, FLORIDA

Sample				OVA Screening Results			
BORING NUMBER	DATE COLLECTED	DEPTH TO WATER	SAMPLE INTERVAL (ft bls)	TOTAL READING (ppm)	CARBON FILTERED (ppm)	NET READING (ppm)	COMMENTS
PCY-333-SB01	6/10/1996	4 ft	0-2	0.0	-	0.0	
			2-4	0.0	-	0.0	
PCY-333-SB02	6/10/1996	4 ft	0-2	0.0	-	0.0	
			2-4	0.0	-	0.0	
PCY-333-SB03	6/10/1996	4 ft	0-2	0.0	-	0.0	
			2-4	0.0	-	0.0	
PCY-333-SB04	6/10/1996	4 ft	0-2	0.0	-	0.0	
			2-4	0.0	-	0.0	
PCY-333-SB05	6/10/1996	4 ft	0-2	0.0	-	0.0	
			2-4	0.0	-	0.0	
PCY-333-SB06	6/10/1996	4 ft	0-2	0.0	-	0.0	
			2-4	0.0	-	0.0	
PCY-333-SB07	6/10/1996	4 ft	0-2	0.0	-	0.0	
			2-4	0.0	-	0.0	
PCY-333-SB08	6/10/1996	4 ft	0-2	0.0	-	0.0	
			2-4	0.0	-	0.0	
PCY-333-SB09	6/10/1996	4 ft	0-2	0.0	-	0.0	
			2-4	0.0	-	0.0	
PCY-333-SB10	6/10/1996	4 ft	0-2	0.0	-	0.0	
			2-4	0.0	-	0.0	
PCY-333-SB11	6/11/1996	4 ft	0-2	0.0	-	0.0	
			2-4	0.0	-	0.0	
PCY-333-SB12	6/11/1996	4 ft	0-2	0.0	-	0.0	
			2-4	0.0	-	0.0	
PCY-AOC2-SSB01	5/20/1998	6 ft	0-2	0.0	-	0.0	
			2-4	0.0	-	0.0	
			4-6	0.0	-	0.0	
PCY-AOC2-SSB02	5/20/1998	6 ft	0-2	0.0	-	0.0	
			2-4	0.0	-	0.0	
			4-6	200	-	200	
PCY-AOC2-SSB03	5/20/1998	6 ft	0-2	0.0	-	0.0	
			2-4	0.0	-	0.0	
			4-6	25	5	20	
PCY-AOC2-SSB04	5/20/1998	6 ft	0-2	0.0	-	0.0	
			2-4	0.0	-	0.0	
			4-6	0.0	-	0.0	
PCY-AOC2-SSB05	5/20/1998	6 ft	0-2	0.0	-	0.0	
			2-4	0.0	-	0.0	
			4-6	300	50	250	
PCY-AOC2-SSB06	5/20/1998	6 ft	0-2	0.0	-	0.0	
			2-4	0.0	-	0.0	
			4-6	300	50	250	
PCY-AOC2-SSB07	5/20/1998	6 ft	0-2	0.0	-	0.0	
			2-4	0.0	-	0.0	
			4-6	300	50	250	
PCY-AOC2-SSB08	5/20/1998	6 ft	0-2	0.0	-	0.0	
			2-4	0.0	-	0.0	
			4-6	300	50	250	

TABLE 2-1 (Continued)
SOIL HEADSPACE SCREENING RESULTS
AREA OF CONCERN 2 REMEDIAL ACTION PLAN
NAVAL SUPPORT ACTIVITY PANAMA CITY, FLORIDA

Sample				OVA Screening Results			
BORING NUMBER	DATE COLLECTED	DEPTH TO WATER	SAMPLE INTERVAL (ft bls)	TOTAL READING (ppm)	CARBON FILTERED (ppm)	NET READING (ppm)	COMMENTS
PCY-AOC2-SSB09	5/21/1998	6 ft	0-2	0.0	-	0.0	
			2-4	0.0	-	0.0	
			4-6	5	-	5	
PCY-AOC2-SSB10	5/21/1998	6 ft	0-2	0.0	-	0.0	
			2-4	0.0	-	0.0	
			4-6	450	30	420	
PCY-AOC2-SSB11	5/21/1998	6 ft	0-2	0.0	-	0.0	
			2-4	0.0	-	0.0	
			4-6	350	350	0.0	
PCY-AOC2-SSB12	5/21/1998	6 ft	0-2	0.0	-	0.0	
			2-4	0.0	-	0.0	
			4-6	400	400	0.0	
PCY-AOC2-SSB13	5/21/1998	6 ft	0-2	0.0	-	0.0	
			2-4	0.0	-	0.0	
			4-6	2000	300	1700	
PCY-AOC2-SSB14	5/21/1998	6 ft	0-2	0.0	-	0.0	
			2-4	0.0	-	0.0	
			4-6	400	150	250	
PCY-AOC2-SSB15	5/21/1998	6 ft	0-2	0.0	-	0.0	
			2-4	0.0	-	0.0	
			4-6	300	70	230	
PCY-AOC2-SSB16	5/21/1998	6 ft	0-2	0.0	-	0.0	
			2-4	0.0	-	0.0	
			4-6	200	200	0.0	
PCY-AOC2-SSB17	5/27/1998	6 ft	0-2	0.0	-	0.0	
			2-4	0.0	-	0.0	
			4-6	200	200	0.0	
PCY-AOC2-SSB18	5/27/1998	6 ft	0-2	0.0	-	0.0	
			2-4	0.0	-	0.0	
			4-6	50	20	30	
PCY-AOC2-SSB19	5/27/1998	6 ft	0-2	0.0	-	0.0	
			2-4	0.0	-	0.0	
			4-6	0.0	-	0.0	
PCY-AOC2-SSB20	5/27/1998	6 ft	0-2	0.0	-	0.0	
			2-4	0.0	-	0.0	
			4-6	0.0	-	0.0	
PCY-AOC2-SSB21	5/27/1998	6 ft	0-2	0.0	-	0.0	
			2-4	0.0	-	0.0	
			4-6	20	-	20	
PCY-AOC2-SSB22	5/27/1998	6 ft	0-2	0.0	-	0.0	
			2-4	0.0	-	0.0	
			4-6	0.0	-	0.0	
PCY-AOC2-SSB23	5/27/1998	N/A	0-2	-	-	-	2 auger refusal
PCY-AOC2-SSB24	5/27/1998	6 ft	0-2	0.0	-	0.0	
			2-4	0.0	-	0.0	
			4-6	0.0	-	0.0	

TABLE 2-1 (Continued)
SOIL HEADSPACE SCREENING RESULTS
AREA OF CONCERN 2 REMEDIAL ACTION PLAN
NAVAL SUPPORT ACTIVITY PANAMA CITY, FLORIDA

Sample				OVA Screening Results			
BORING NUMBER	DATE COLLECTED	DEPTH TO WATER	SAMPLE INTERVAL (ft bls)	TOTAL READING (ppm)	CARBON FILTERED (ppm)	NET READING (ppm)	COMMENTS
PCY-AOC2-SSB25	5/27/1998	6 ft	0-2	0.0	-	0.0	
			2-4	0.0	-	0.0	
			4-6	0.0	-	0.0	
PCY-AOC2-SSB26	5/27/1998	6 ft	0-2	0.0	-	0.0	
			2-4	0.0	-	0.0	
			4-6	0.0	-	0.0	
PCY-AOC2-SSB27	5/27/1998	6 ft	0-2	200	-	200	
			2-4	350	-	350	
			4-6	200	-	200	
PCY-AOC2-SSB28	5/27/1998	6 ft	0-2	0.0	-	0.0	
			2-4	0.0	-	0.0	
			4-6	10	5	5	
PCY-AOC2-SSB29	5/27/1998	6 ft	0-2	0.0	-	0.0	
			2-4	40	40	0.0	
			4-6	40	40	0.0	
PCY-AOC2-SSB30	9/19/1998	6 ft	0-2	0.0	-	0.0	
			2-4	0.0	-	0.0	
			4-6	15	15	0.0	
PCY-AOC2-SSB31	9/19/1998	6 ft	0-2	0.0	-	0.0	
			2-4	0.0	-	0.0	
			4-6	1000	200	800.0	
PCY-AOC2-B01	8/8/2000	6 ft	0-2	5	-	5	
			2-4	0.0	-	0.0	
			4-6	0.0	-	0.0	AOC2SFB0104
			6-8	300	50	250	Well installed to 12 ft TD, Abandoned
PCY-AOC2-P01A	8/9/2000	6 ft	0-2	3	2	1	
			2-4	0.0	-	0.0	
			4-6	800	-	800	
			6-8	400	-	400	Well installed to 12 ft TD, P01
PCY-AOC2-B02	8/8/2000	6 ft	0-2	0.0	-	0.0	
			2-4	0.0	-	0.0	
			4-6	180	-	180	AOC2SFB0204
			6-8	450	5	445	Well installed to 12 ft TD, Abandoned
PCY-AOC2-P02A	8/9/2000	6 ft	0-2	17	-	17	
			2-4	7	-	7	
			4-6	250	1	249	
			6-8	2000	10	1990	Well installed to 12 ft. TD., P02
PCY-AOC2-B03	8/9/2000	6 ft	0-2	0.0	-	0.0	
			2-4	0.0	-	0.0	
			4-6	200	-	200	AOC2SFB0304
			6-8	3000	100	2900	Well installed to 12 ft TD, Abandoned
PCY-AOC2-P03A	8/10/2000	6 ft	0-2	0.0	-	0.0	
			2-4	0.0	-	0.0	
			4-6	310	-	310	
			6-8	2500	-	2500	Well installed to 12 ft TD, P03

TABLE 2-1 (Continued)
SOIL HEADSPACE SCREENING RESULTS
AREA OF CONCERN 2 REMEDIAL ACTION PLAN
NAVAL SUPPORT ACTIVITY PANAMA CITY, FLORIDA

Sample				OVA Screening Results			
BORING NUMBER	DATE COLLECTED	DEPTH TO WATER	SAMPLE INTERVAL (ft bls)	TOTAL READING (ppm)	CARBON FILTERED (ppm)	NET READING (ppm)	COMMENTS
PCY-AOC2-B04	8/9/2000	5.7 ft	0-2	0.0	-	0.0	
			2-4	0.0	-	0.0	
			4-6	150	-	150	AOC2SFB0404/AOC2SLB0404
			6-8	250	-	250	
PCY-AOC2-B05	8/9/2000	5.5 ft	0-2	0.0	-	0.0	
			2-4	0.0	-	0.0	
			4-6	10	-	10	AOC2SFB0504
			6-8	70	22	48	
PCY-AOC2-B06	8/9/2000	5.4 ft	0-2	0.0	-	0.0	
			2-4	0.0	-	0.0	
			4-6	0.0	-	0.0	AOC2SFB0604
			6-8	340	40	300	
PCY-AOC2-B07	8/9/2000	5.25 ft	0-2	0.0	-	0.0	
			2-4	0.0	-	0.0	
			4-6	1000	1	999	AOC2SFB0704/AOC2SLB0704
			6-8	2100	170	1930	
PCY-AOC2-B08	8/9/2000	6.15 ft	0-2	0.0	-	0.0	
			2-4	0.0	-	0.0	
			4-6	0.0	-	0.0	AOC2SFB0804
			6-8	220	100	120	
PCY-AOC2-B09	8/9/2000	6 ft	0-2	3	-	3	
			2-4	2	1	1	
			4-6	3	2	1	AOC2SFB0904
			6-8	31	-	31	
PCY-AOC2-B10	8/9/2000	5.45 ft	0-2	2	2	0.0	
			2-4	0.0	-	0.0	
			4-6	100	-	100	AOC2SFB1004/AOC2SLB1004
			6-8	200	7	193	
PCY-AOC2-B11	8/10/2000	5.40 ft	0-2	0.0	-	0.0	
			2-4	3	-	3	
			4-6	90	-	90	AOC2SFB1104/AOC2SLB1104
			6-8	1300	-	1300	Well installed to 12 ft TD, P05
PCY-AOC2-B12	8/10/2000	6 ft	0-2	0.0	-	0.0	
			2-4	0.0	-	0.0	
			4-6	0.0	-	0.0	AOC2SFB1204
			6-8	100	50	50	
PCY-AOC2-B13	8/10/2000	6.75 ft	0-2	0.0	-	0.0	
			2-4	0.0	-	0.0	
			4-6	0.0	-	0.0	AOC2SFB1304
			6-8				No recovery in sampler
PCY-AOC2-B14	8/10/2000	6.95 ft	0-2	0.0	-	0.0	
			2-4	0.0	-	0.0	
			4-6	0.0	-	0.0	
			6-8	20	18	2	AOC2SFB1406
PCY-AOC2-B15	8/10/2000	6.80 ft	0-2	0.0	-	0.0	
			2-4	0.0	-	0.0	
			4-6	0.0	-	0.0	AOC2SFB1504
			6-8	1	-	1	

TABLE 2-1 (Continued)
SOIL HEADSPACE SCREENING RESULTS
AREA OF CONCERN 2 REMEDIAL ACTION PLAN
NAVAL SUPPORT ACTIVITY PANAMA CITY, FLORIDA

Sample				OVA Screening Results			
BORING NUMBER	DATE COLLECTED	DEPTH TO WATER	SAMPLE INTERVAL (ft bls)	TOTAL READING (ppm)	CARBON FILTERED (ppm)	NET READING (ppm)	COMMENTS
PCY-AOC2-B16	8/10/2000	6.91 ft	0-2	0.0	-	0.0	
			2-4	0.0	-	0.0	
			4-6	0.0	-	0.0	AOC2SFB1604
			6-8	0.0	-	0.0	
PCY-AOC2-B17	8/10/2000	6.52 ft	0-2	0.0	-	0.0	
			2-4	0.0	-	0.0	
			4-6	0.0	-	0.0	AOC2SFB1704
			6-8	80	20	60	
PCY-AOC2-B18	8/10/2000	7.45 ft	0-2	0.0	-	0.0	
			2-4	0.0	-	0.0	
			4-6	0.0	-	0.0	
			6-8	0.0	-	0.0	AOC2SFB1806
PCY-AOC2-B19	8/10/2000	6.65 ft	0-2	0.0	-	0.0	
			2-4	0.0	-	0.0	
			4-6	0.0	-	0.0	AOC2SFB1904
			6-8	450	60	390	
PCY-AOC2-B20	8/10/2000	6 ft	0-2	0.0	-	0.0	
			2-4	0.0	-	0.0	
			4-6	0.0	-	0.0	AOC2SFB2004
			6-8	700	-	700	Well installed to 12 ft TD, P04
PCY-AOC2-B21	8/11/2000	5.55 ft	0-2	0.0	-	0.0	
			2-4	50	10	40	AOC2SFB2102
			4-6	40	5	35	
			6-8	1000	15	985	
PCY-AOC2-B22	8/11/2000	5.25 ft	0-2	0.0	-	0.0	
			2-4	0.0	-	0.0	
			4-6	7	-	7	AOC2SFB2204
			6-8	3000	150	2850	
PCY-AOC2-B23	8/11/2000	5.55 ft	0-2	0.0	-	0.0	
			2-4	0.0	-	0.0	
			4-6	0.0	-	0.0	AOC2SFB2304
			6-8	0.0	-	0.0	
PCY-AOC2-B24	8/11/2000	6.5 ft	0-2	0.0	-	0.0	
			2-4	0.0	-	0.0	
			4-6	0.0	-	0.0	AOC2SFB2404
			6-8	0.0	-	0.0	
PCY-AOC2-SB01	5/13/2002	6 ft	0-2	0.1	-	0.1	
			2-4	0.0	-	0.0	
			4-6	0.0	-	0.0	
			6-8	0.0	-	0.0	
PCY-AOC2-SB02	5/13/2002	6 ft	0-2	0.0	-	0.0	
			2-4	0.0	-	0.0	
			4-6	0.0	-	0.0	
			6-8	0.0	-	0.0	
PCY-AOC2-SB03	5/13/2002	6 ft	0-2	0.0	-	0.0	
			2-4	0.0	-	0.0	
			4-6	0.0	-	0.0	
			6-8	0.0	-	0.0	

TABLE 2-1 (Continued)
SOIL HEADSPACE SCREENING RESULTS
AREA OF CONCERN 2 REMEDIAL ACTION PLAN
NAVAL SUPPORT ACTIVITY PANAMA CITY, FLORIDA

Sample				OVA Screening Results			
BORING NUMBER	DATE COLLECTED	DEPTH TO WATER	SAMPLE INTERVAL (ft bls)	TOTAL READING (ppm)	CARBON FILTERED (ppm)	NET READING (ppm)	COMMENTS
PCY-AOC2-SB04	5/13/2002	6 ft	0-2	0.0	-	0.0	
			2-4	0.0	-	0.0	
			4-6	0.0	-	0.0	
			6-8	90.4	0.0	90.4	
PCY-AOC2-SB05	5/13/2002	6 ft	0-2	0.0	-	0.0	
			2-4	0.0	-	0.0	
			4-6	13.8	0.0	13.8	
			6-8	65.7	0.0	65.7	
PCY-AOC2-SB06	5/13/2002	6 ft	0-2	0.0	-	0.0	
			2-4	0.0	-	0.0	
			4-6	113.4	76.1	37.3	
			6-8	262.7	55.0	207.7	
PCY-AOC2-SB07	5/13/2002	6 ft	0-2	0.0	-	0.0	
			2-4	0.0	-	0.0	
			4-6	0.0	-	0.0	
			6-8	9.6	0.0	9.6	
PCY-AOC2-SB08	5/13/2002	6 ft	0-2	0.0	-	0.0	
			2-4	0.0	-	0.0	
			4-6	8.3	-	8.3	
			6-8	13.2	0.0	13.2	
PCY-AOC2-SB09	5/13/2002	6 ft	0-2	0.0	-	0.0	
			2-4	0.0	-	0.0	
			4-6	0.0	-	0.0	
			6-8	0.0	-	0.0	
PCY-AOC2-SB10	5/13/2002	6 ft	0-2	0.0	-	0.0	
			2-4	0.0	-	0.0	
			4-6	0.0	-	0.0	
			6-8	0.0	-	0.0	
PCY-AOC2-SB11	5/13/2002	6 ft	0-2	0.0	-	0.0	
			2-4	0.0	-	0.0	
			4-6	0.0	-	0.0	
			6-8	25.2	0.0	25.2	
PCY-AOC2-SB12	5/13/2002	6 ft	0-2	0.0	-	0.0	
			2-4	0.0	-	0.0	
			4-6	0.0	-	0.0	
			6-8	0.0	-	0.0	
PCY-AOC2-SB13	5/13/2002	6 ft	0-2	0.0	-	0.0	
			2-4	0.0	-	0.0	
			4-6	69.1	0.0	69.1	
			6-8	153.6	109.7	43.9	
PCY-AOC2-SB14	5/13/2002	6 ft	0-2	0.0	-	0.0	
			2-4	0.0	-	0.0	
			4-6	74.2	0.0	74.2	
			6-8	137.2	120.1	17.1	
PCY-AOC2-SB15	5/13/2002	6 ft	0-2	0.0	-	0.0	
			2-4	0.0	-	0.0	
			4-6	115.4	57.5	57.9	
			6-8	340.0	116.0	224.0	

TABLE 2-1 (Continued)
SOIL HEADSPACE SCREENING RESULTS
AREA OF CONCERN 2 REMEDIAL ACTION PLAN
NAVAL SUPPORT ACTIVITY PANAMA CITY, FLORIDA

Sample				OVA Screening Results			
BORING NUMBER	DATE COLLECTED	DEPTH TO WATER	SAMPLE INTERVAL (ft bls)	TOTAL READING (ppm)	CARBON FILTERED (ppm)	NET READING (ppm)	COMMENTS
PCY-AOC2-SB16	5/13/2002	6 ft	0-2	0.0	-	0.0	
			2-4	0.0	-	0.0	
			4-6	0.0	-	0.0	
			6-8	3093.0	10.3	3082.7	
PCY-AOC2-SB17	5/13/2002	6 ft	0-2	0.0	-	0.0	
			2-4	0.0	-	0.0	
			4-6	12.5	0.0	12.5	
			6-8	142.6	32.5	110.1	
PCY-AOC2-SB18	5/13/2002	6 ft	0-2	0.0	-	0.0	
			2-4	0.0	-	0.0	
			4-6	0.0	-	0.0	
			6-8	0.0	-	0.0	
PCY-AOC2-SB19	5/13/2002	6 ft	0-2	0.0	-	0.0	
			2-4	0.0	-	0.0	
			4-6	0.0	-	0.0	
			6-8	1.2	-	1.2	
PCY-AOC2-SB20	5/13/2002	6 ft	0-2	0.0	-	0.0	
			2-4	0.0	-	0.0	
			4-6	0.0	-	0.0	
			6-8	60.4	13.8	46.6	
PCY-AOC2-SB21	5/13/2002	6 ft	0-2	0.0	-	0.0	
			2-4	0.0	-	0.0	
			4-6	0.0	-	0.0	
			6-8	180.6	95.1	85.5	
PCY-AOC2-SB22	5/13/2002	6 ft	0-2	0.0	-	0.0	
			2-4	7.1	-	7.1	
			4-6	24.6	0.0	24.6	
			6-8	92.7	23.7	69.0	
PCY-AOC2-SB23	5/13/2002	6 ft	0-2	0.0	-	0.0	
			2-4	0.0	-	0.0	
			4-6	0.0	-	0.0	
			6-8	0.3	-	0.3	
PCY-AOC2-SB24	5/13/2002	6 ft	0-2	0.0	-	0.0	
			2-4	0.0	-	0.0	
			4-6	0.0	-	0.0	
			6-8	174.2	88.2	86.0	
PCY-AOC2-SB25	5/13/2002	6 ft	0-2	0.0	-	0.0	
			2-4	0.0	-	0.0	
			4-6	0.0	-	0.0	
			6-8	2066.0	0.0	2066.0	
PCY-AOC2-SB26	5/13/2002	6 ft	0-2	0.0	-	0.0	
			2-4	0.0	-	0.0	
			4-6	0.0	-	0.0	
			6-8	0.0	-	0.0	
PCY-AOC2-SB27	5/13/2002	6 ft	0-2	207.2	69.2	138.0	
			2-4	284.1	13.4	270.7	
			4-6	310.4	37.8	272.6	
			6-8	1171.0	159.4	1011.6	

TABLE 2-1 (Continued)
SOIL HEADSPACE SCREENING RESULTS
AREA OF CONCERN 2 REMEDIAL ACTION PLAN
NAVAL SUPPORT ACTIVITY PANAMA CITY, FLORIDA

Sample				OVA Screening Results			
BORING NUMBER	DATE COLLECTED	DEPTH TO WATER	SAMPLE INTERVAL (ft bls)	TOTAL READING (ppm)	CARBON FILTERED (ppm)	NET READING (ppm)	COMMENTS
PCY-AOC2-SB28	5/13/2002	6 ft	0-2	0.0	-	0.0	
			2-4	0.0	-	0.0	
			4-6	123.2	70.1	53.1	
			6-8	89.4	79.5	9.9	
PCY-AOC2-SB29	5/13/2002	6 ft	0-2	0.0	-	0.0	
			2-4	0.0	-	0.0	
			4-6	75.4	19.3	56.1	
			6-8	320.7	305.3	15.4	
PCY-AOC2-SB30	5/13/2002	6 ft	0-2	0.0	-	0.0	
			2-4	0.0	-	0.0	
			4-6	0.0	-	0.0	
			6-8	35.1	0.0	35.1	
PCY-AOC2-SB31	5/13/2002	6 ft	0-2	0.0	-	0.0	
			2-4	0.0	-	0.0	
			4-6	5.9	-	5.9	
			6-8	152.6	0.0	152.6	
PCY-AOC2-SB32	5/13/2002	6 ft	0-2	0.0	-	0.0	
			2-4	0.0	-	0.0	
			4-6	271.4	101.7	169.7	
			6-8	145.9	69.1	76.8	
PCY-AOC2-SB33	5/13/2002	6 ft	0-2	0.0	-	0.0	
			2-4	0.0	-	0.0	
			4-6	165.7	19.8	145.9	
			6-8	937.0	277.1	659.9	
PCY-AOC2-SB34	5/13/2002	6 ft	0-2	0.0	-	0.0	
			2-4	0.0	-	0.0	
			4-6	331.4	119.1	212.3	
			6-8	501.4	305.6	195.8	
PCY-AOC2-SB35	5/13/2002	6 ft	0-2	0.0	-	0.0	
			2-4	0.0	-	0.0	
			4-6	185.6	104.9	80.7	
			6-8	386.4	166.8	219.6	
PCY-AOC2-SB36	5/13/2002	6 ft	0-2	0.0	-	0.0	
			2-4	0.0	-	0.0	
			4-6	116.1	86.2	29.9	
			6-8	308.0	203.6	104.4	
PCY-AOC2-HA01	5/13/2002	6 ft	0-2	0.0	-	0.0	
			2-4	0.0	-	0.0	
			4-6	0.0	-	0.0	
PCY-AOC2-HA02	5/13/2002	6 ft	0-2	0.0	-	0.0	
			2-4	0.0	-	0.0	
			4-6	0.0	-	0.0	
PCY-AOC2-HA03	5/13/2002	6 ft	0-2	0.0	-	0.0	
			2-4	0.0	-	0.0	
			4-6	0.0	-	0.0	
PCY-AOC2-HA04	5/13/2002	6 ft	0-2	0.0	-	0.0	
			2-4	968.0	23.2	944.8	
			4-6	2561.0	51.9	2509.1	

TABLE 2-1 (Continued)
SOIL HEADSPACE SCREENING RESULTS
AREA OF CONCERN 2 REMEDIAL ACTION PLAN
NAVAL SUPPORT ACTIVITY PANAMA CITY, FLORIDA

Sample				OVA Screening Results			
BORING NUMBER	DATE COLLECTED	DEPTH TO WATER	SAMPLE INTERVAL (ft bls)	TOTAL READING (ppm)	CARBON FILTERED (ppm)	NET READING (ppm)	COMMENTS
PCY-AOC2-HA05	5/13/2002	6 ft	0-2	0.0	-	0.0	
			2-4	1896.0	70.0	1826.0	
			4-6	27396.0	45.1	27350.9	
PCY-AOC2-HA06	5/13/2002	6 ft	0-2	0.0	-	0.0	
			2-4	0.0	-	0.0	
			4-6	0.0	-	0.0	
PCY-AOC2-HA07	5/13/2002	6 ft	0-2	0.0	-	0.0	
			2-4	0.0	-	0.0	
			4-6	0.0	-	0.0	
PCY-AOC2-HA08	5/13/2002	6 ft	0-2	0.0	-	0.0	
			2-4	4615.0	1222.0	3393.0	
			4-6	12282.0	987.0	11295.0	
PCY-AOC2-HA09	5/13/2002	6 ft	0-2	0.0	-	0.0	
			2-4	30.3	0.0	30.3	
			4-6	41555.0	3.0	41552.0	
PCY-AOC2-HA10	5/13/2002	6 ft	0-2	0.0	-	0.0	
			2-4	0.0	-	0.0	
			4-6	0.0	-	0.0	
PCY-AOC2-HA11	5/13/2002	6 ft	0-2	0.0	-	0.0	
			2-4	0.0	-	0.0	
			4-6	0.0	-	0.0	
PCY-AOC2-HA12	5/13/2002	6 ft	0-2	0.0	-	0.0	
			2-4	0.0	-	0.0	
			4-6	0.0	-	0.0	
PCY-AOC2-HA13	5/13/2002	6 ft	0-2	0.0	-	0.0	
			2-4	0.0	-	0.0	
			4-6	0.0	-	0.0	
PCY-AOC2-HA14	5/13/2002	6 ft	0-2	0.0	-	0.0	
			2-4	0.0	-	0.0	
			4-6	0.0	-	0.0	
PCY-AOC2-HA15	5/13/2002	6 ft	0-2	0.0	-	0.0	
			2-4	0.0	-	0.0	
			4-6	0.0	-	0.0	
PCY-AOC2-HA16	5/13/2002	6 ft	0-2	0.0	-	0.0	
			2-4	0.0	-	0.0	
			4-6	0.0	-	0.0	
PCY-AOC2-HA17	5/13/2002	6 ft	0-2	0.0	-	0.0	
			2-4	0.0	-	0.0	
			4-6	0.0	-	0.0	
PCY-AOC2-HA18	5/13/2002	6 ft	0-2	0.0	-	0.0	
			2-4	0.0	-	0.0	
			4-6	0.0	-	0.0	
PCY-AOC2-HA19	5/13/2002	6 ft	0-2	0.0	-	0.0	
			2-4	0.0	-	0.0	
			4-6	0.0	-	0.0	
			6-8	0.0	-	0.0	

TABLE 2-1 (Continued)
SOIL HEADSPACE SCREENING RESULTS
AREA OF CONCERN 2 REMEDIAL ACTION PLAN
NAVAL SUPPORT ACTIVITY PANAMA CITY, FLORIDA

Sample				OVA Screening Results			
BORING NUMBER	DATE COLLECTED	DEPTH TO WATER	SAMPLE INTERVAL (ft bls)	TOTAL READING (ppm)	CARBON FILTERED (ppm)	NET READING (ppm)	COMMENTS
PCY-AOC2-HA20	5/13/2002	4 ft	0-2	0.0	-	0.0	
			2-4	0.0	-	0.0	
PCY-AOC2-HA21	5/13/2002	4 ft	0-2	0.0	-	0.0	
			2-4	4406.0	451.7	3954.3	
PCY-AOC2-HA22	5/13/2002	4 ft	0-2	0.0	-	0.0	
			2-4	0.0	-	0.0	
PCY-AOC2-HA23	5/13/2002	4 ft	0-2	0.0	-	0.0	
			2-4	30.1	0.0	30.1	
PCY-AOC2-HA24	5/13/2002	4 ft	0-2	0.0	-	0.0	
			2-4	0.0	-	0.0	
PCY-AOC2-HA25	5/13/2002	4 ft	0-2	0.0	-	0.0	
			2-4	11.1	0.0	11.1	
PCY-AOC2-HA26	5/13/2002	4 ft	0-2	0.0	-	0.0	
			2-4	0.0	-	0.0	

Notes:
NS = not sampled

Rev. 1
06/14/07

TABLE 2-2
SUMMARY OF MOBILE LABORATORY SCREENING RESULTS FOR SOIL
AREA OF CONCERN 2 REMEDIAL ACTION PLAN
NAVAL SUPPORT ACTIVITY PANAMA CITY, FLORIDA

Sampling Details				OVA	Laboratory Analyses (mg/kg)									
Boring Number	Date Collected	Depth to Water	Sample Interval (ft bls)	Net OVA Reading (ppm)	Benzene	Toluene	Ethyl-benzene	M & P Xylenes	O Xylene	Total Xylene	Total VOAs	Naph-thalene	MTBE	DRO
PCY-AOC2-B01	8/8/2000	6	4-6	0.0	< 0.004	<0.004	<0.004	N/A	N/A	<0.012	N/A	0.004J	N/A	115
PCY-AOC2-B02	8/8/2000	6	4-6	180	< 0.004	0.003J	<0.004	N/A	N/A	0.012J	0.015J	0.05	N/A	819
PCY-AOC2-B03	8/9/2000		4-6	200	< 0.004	<0.004	<0.004	N/A	N/A	<0.012	N/A	<0.02	N/A	1,797E
PCY-AOC2-B04	8/9/2000	5.7	4-6	150	<0.004	0.005	0.004J	N/A	N/A	0.017	0.026	0.022	N/A	24,400E
PCY-AOC2-B05	8/9/2000	5.5	4-6	10	<0.004	<0.004	<0.004	N/A	N/A	0.008J	0.008J	<0.02	N/A	11,500E
PCY-AOC2-B06	8/9/2000	5.4	4-6	0	<0.004	<0.004	<0.004	N/A	N/A	0.009J	0.009J	<0.02	N/A	22J
PCY-AOC2-B07	8/9/2000	5.25	4-6	999	<0.004	<0.004	<0.004	N/A	N/A	0.009J	0.009J	<0.02	N/A	11,800E
PCY-AOC2-B08	8/9/2000	6	4-6	0	<0.004	0	<0.004	N/A	N/A	0.007J	0	<0.02	N/A	<50
PCY-AOC2-B09	8/9/2000	6	4-6	1	<0.004	<0.004	<0.004	N/A	N/A	0.003J	0.003J	<0.02	N/A	2,140
PCY-AOC2-B10	8/9/2000	5.4	4-6	100	<0.004	<0.004	<0.004	N/A	N/A	0.008J	0.008J	<0.02	N/A	10J
PCY-AOC2-B11	8/9/2000	5.4	4-6	90	<0.004	<0.004	0.004J	N/A	N/A	0.010J	0.014J	<0.02	N/A	44,900E
PCY-AOC2-B12	8/10/2000	6	4-6	0	<0.004	<0.004	0.005	N/A	N/A	<0.012	0.005	<0.02	N/A	<50
PCY-AOC2-B13	8/10/2000	6.7	4-6	0	<0.004	<0.004	<0.004	N/A	N/A	0.008J	0.012J	<0.02	N/A	123
PCY-AOC2-B14	8/10/2000	6.9	6-8	2	<0.004	<0.004	<0.004	N/A	N/A	0.009J	0.012J	0.006J	N/A	245
PCY-AOC2-B15	8/10/2000	6.8	4-6	0	<0.004	<0.004	<0.004	N/A	N/A	0.009J	0.009J	0.004J	N/A	12J
PCY-AOC2-B16	8/10/2000	6.9	4-6	0	<0.004	<0.004	<0.004	N/A	N/A	0.009J	0.009J	0.004J	N/A	132
PCY-AOC2-B17	8/10/2000	6.5	4-6	0	<0.004	<0.004	<0.004	N/A	N/A	0.009J	0.009J	0.004J	N/A	<0.05
PCY-AOC2-B18	8/10/2000	7.4	6-8	0	<0.004	<0.004	<0.004	N/A	N/A	0.009J	0.009J	0.004J	N/A	99
PCY-AOC2-B19	8/10/2000	6.6	6-8	0	<0.004	<0.004	<0.004	N/A	N/A	0.009J	0.009J	0.004J	N/A	<0.05
PCY-AOC2-B20	8/10/2000	6	4-6	0	<0.004	<0.004	<0.004	N/A	N/A	0.009J	0.009J	0.004J	N/A	<0.05
PCY-AOC2-B21	8/11/2000	5.5	2-4	40	<0.004	<0.004	<0.004	N/A	N/A	<0.012	N/A	<0.02	N/A	17J
PCY-AOC2-B22	8/11/2000	5.25	4-6	7	<0.004	<0.004	<0.004	N/A	N/A	<0.012	N/A	5J	N/A	510
PCY-AOC2-B23	8/11/2000	5.5	4-6	N/A	<0.004	<0.004	<0.004	N/A	N/A	<0.012	N/A	4J	N/A	10J
PCY-AOC2-B24	8/11/2000	6.5	4-6	N/A	<0.004	<0.004	<0.004	N/A	N/A	<0.012	N/A	5J	N/A	23J
PCY-AOC2-SB01	5/13/2002	6	4-6	0.0	< 0.005	<0.010	<0.010	<0.010	<0.010	N/A	N/A	<0.05	<0.05	N/A
PCY-AOC2-SB02	5/13/2002	6	4-6	0.0	< 0.005	<0.010	<0.010	<0.010	<0.010	N/A	N/A	<0.05	<0.05	N/A
PCY-AOC2-SB03	5/14/2002	6	4-6	0.0	< 0.005	<0.010	<0.010	<0.010	<0.010	N/A	N/A	<0.05	<0.05	N/A
PCY-AOC2-SB04	5/14/2002	6	4-6	0.0	< 0.005	<0.010	<0.010	<0.010	<0.010	N/A	N/A	0.192	<0.05	N/A
PCY-AOC2-SB05	5/14/2002	6	4-6	13.8	< 0.005	<0.010	<0.010	<0.010	<0.010	N/A	N/A	0.093	<0.05	N/A
PCY-AOC2-SB06	5/14/2002	6	4-6	37.3	<0.012	<0.024	<0.024	<0.024	<0.024	N/A	N/A	0.24	<0.12	N/A
PCY-AOC2-SB07	5/14/2002	6	4-6	0.0	< 0.005	<0.010	<0.010	<0.010	<0.010	N/A	N/A	<0.05	<0.05	N/A

TABLE 2-2 (Continued)
SUMMARY OF MOBILE LABORATORY SCREENING RESULTS FOR SOIL
AREA OF CONCERN 2 SITE ASSESSMENT REPORT
NAVAL SUPPORT ACTIVITY PANAMA CITY, FLORIDA

Sampling Details				OVA	Laboratory Analyses (mg/kg)									
Boring Number	Date Collected	Depth to Water	Sample Interval (ft bls)	Net OVA Reading (ppm)	Benzene	Toluene	Ethyl-benzene	M & P Xylenes	O Xylene	Total Xylene	Total VOAs	Naph-thalene	MTBE	DRO
PCY-AOC2-SB08	5/14/2002	6	4-6	8.3	< 0.005	<0.010	<0.010	<0.010	<0.010	N/A	N/A	<0.05	<0.05	N/A
PCY-AOC2-SB09	5/14/2002	6	4-6	0.0	< 0.005	<0.010	<0.010	<0.010	<0.010	N/A	N/A	<0.05	<0.05	N/A
PCY-AOC2-SB10	5/14/2002	6	4-6	0.0	< 0.005	<0.010	<0.010	<0.010	<0.010	N/A	N/A	<0.05	<0.05	N/A
PCY-AOC2-SB11	5/14/2002	6	4-6	0.0	< 0.005	<0.010	<0.010	<0.010	<0.010	N/A	N/A	<0.05	<0.05	N/A
PCY-AOC2-SB12	5/14/2002	6	4-6	0.0	< 0.005	<0.010	<0.010	<0.010	<0.010	N/A	N/A	<0.05	<0.05	N/A
PCY-AOC2-SB13	5/14/2002	6	4-6	69.1	< 0.005	<0.010	<0.010	<0.010	<0.010	N/A	N/A	<0.05	<0.05	N/A
PCY-AOC2-SB14	5/15/2002	6	4-6	74.2	< 0.005	<0.010	<0.010	<0.010	<0.010	N/A	N/A	<0.05	<0.05	N/A
PCY-AOC2-SB15	5/15/2002	6	4-6	57.9	< 0.005	<0.010	<0.010	<0.010	<0.010	N/A	N/A	<0.05	<0.05	N/A
PCY-AOC2-SB16	5/15/2002	6	4-6	0.0	< 0.005	<0.010	<0.010	<0.010	<0.010	N/A	N/A	<0.05	<0.05	N/A
PCY-AOC2-SB17	5/15/2002	6	4-6	12.5	< 0.005	<0.010	<0.010	<0.010	<0.010	N/A	N/A	<0.05	<0.05	N/A
PCY-AOC2-SB18	5/15/2002	6	4-6	0.0	< 0.005	<0.010	<0.010	<0.010	<0.010	N/A	N/A	<0.05	<0.05	N/A
PCY-AOC2-SB19	5/15/2002	6	4-6	0.0	< 0.005	<0.010	<0.010	<0.010	<0.010	N/A	N/A	<0.05	<0.05	N/A
PCY-AOC2-SB20	5/15/2002	6	4-6	0.0	< 0.005	<0.010	<0.010	<0.010	<0.010	N/A	N/A	<0.05	<0.05	N/A
PCY-AOC2-SB21	5/15/2002	6	4-6	0.0	< 0.005	<0.010	<0.010	<0.010	<0.010	N/A	N/A	<0.05	<0.05	N/A
PCY-AOC2-SB22	5/15/2002	6	4-6	24.6	< 0.005	<0.010	0.041	0.021	<0.010	N/A	N/A	<0.05	<0.05	N/A
PCY-AOC2-SB23	5/15/2002	6	4-6	0.0	< 0.005	<0.010	<0.010	<0.010	<0.010	N/A	N/A	<0.05	<0.05	N/A
PCY-AOC2-SB24	5/15/2002	6	4-6	0.0	< 0.005	<0.010	<0.010	<0.010	<0.010	N/A	N/A	<0.05	<0.05	N/A
PCY-AOC2-SB25	5/15/2002	6	4-6	0.0	< 0.005	<0.010	<0.010	<0.010	<0.010	N/A	N/A	<0.05	<0.05	N/A
PCY-AOC2-SB26	5/16/2002	6	4-6	0.0	< 0.005	<0.010	<0.010	<0.010	<0.010	N/A	N/A	<0.05	<0.05	N/A
PCY-AOC2-SB27	5/16/2002	6	4-6	272.6	<.05	<0.1	2.0	<0.1	<0.1	N/A	N/A	36L	<0.5	N/A
PCY-AOC2-SB28	5/16/2002	6	4-6	53.1	< 0.005	<0.010	<0.010	<0.010	<0.010	N/A	N/A	<0.05	<0.05	N/A
PCY-AOC2-SB29	5/16/2002	6	4-6	56.1	< 0.005	<0.010	<0.010	<0.010	<0.010	N/A	N/A	<0.05	<0.05	N/A
PCY-AOC2-SB30	5/16/2002	6	4-6	0.0	< 0.005	<0.010	<0.010	<0.010	<0.010	N/A	N/A	<0.05	<0.05	N/A
PCY-AOC2-SB31	5/16/2002	6	4-6	5.9	< 0.005	<0.010	<0.010	<0.010	<0.010	N/A	N/A	<0.05	<0.05	N/A
PCY-AOC2-SB32	5/16/2002	6	4-6	169.7	< 0.005	<0.010	<0.010	<0.010	<0.010	N/A	N/A	<0.05	<0.05	N/A
PCY-AOC2-SB33	5/16/2002	6	4-6	145.9	< 0.1	<0.2	<0.2	<0.2	<0.2	N/A	N/A	15	<1	N/A
PCY-AOC2-SB34	5/16/2002	6	4-6	212.3	< 0.005	<0.010	0.015	<0.010	<0.010	N/A	N/A	0.55	<0.05	N/A
PCY-AOC2-SB35	5/16/2002	6	4-6	80.7	< 0.005	<0.010	<0.010	<0.010	<0.010	N/A	N/A	0.11	<0.05	N/A
PCY-AOC2-SB36	5/16/2002	6	4-6	29.9	< 0.005	<0.010	<0.010	<0.010	<0.010	N/A	N/A	<0.05	<0.05	N/A
PCY-AOC2-SB37	4/29/2003	5	3-4	N/A	<0.007	<0.010	<0.010	<0.010	<0.010	N/A	N/A	<0.050	<0.050	N/A
PCY-AOC2-SB37	4/29/2003	5	9-10	N/A	<1	<1	<1	<1	<1	N/A	N/A	<5	<5	N/A

TABLE 2-2 (Continued)
SUMMARY OF MOBILE LABORATORY SCREENING RESULTS FOR SOIL
AREA OF CONCERN 2 SITE ASSESSMENT REPORT
NAVAL SUPPORT ACTIVITY PANAMA CITY, FLORIDA

Sampling Details				OVA	Laboratory Analyses (mg/kg)									
Boring Number	Date Collected	Depth to Water	Sample Interval (ft bls)	Net OVA Reading (ppm)	Benzene	Toluene	Ethyl-benzene	M & P Xylenes	O Xylene	Total Xylene	Total VOAs	Naph-thalene	MTBE	DRO
PCY-AOC2-SB38	4/29/2003	5	3-4	N/A	<0.007	<0.010	<0.010	<0.010	<0.010	N/A	N/A	<0.050	<0.050	N/A
PCY-AOC2-SB38	4/29/2003	5	9-10	N/A	<1	<1	<1	<1	<1	N/A	N/A	<5	<5	N/A
PCY-AOC2-SB39	4/29/2003	4	3-4	N/A	<0.007	<0.010	<0.010	<0.010	<0.010	N/A	N/A	<0.050	<0.050	N/A
PCY-AOC2-SB39	4/29/2003	4	9-10	N/A	<1	<1	<1	<1	<1	N/A	N/A	<5	<5	N/A
PCY-AOC2-SB40	4/29/2003	4	3-4	N/A	<0.007	<0.010	<0.010	<0.010	<0.010	N/A	N/A	<0.050	<0.050	N/A
PCY-AOC2-SB40	4/29/2003	4	9-10	N/A	<1	<1	<1	<1	<1	N/A	N/A	<5	<5	N/A
PCY-AOC2-SB41	4/29/2003	4	3-4	N/A	<0.007	<0.010	<0.010	<0.010	<0.010	N/A	N/A	<0.050	<0.050	N/A
PCY-AOC2-SB41	4/29/2003	4	9-10	N/A	<1	<1	<1	<1	<1	N/A	N/A	<5	<5	N/A
PCY-AOC2-SB42	4/29/2003	4	3-4	N/A	<0.007	<0.010	<0.010	<0.010	<0.010	N/A	N/A	<0.050	<0.050	N/A
PCY-AOC2-SB42	4/29/2003	4	9-10	N/A	<1	<1	<1	<1	<1	N/A	N/A	<5	<5	N/A
PCY-AOC2-SB43	4/29/2003	5	3-4	N/A	<0.007	<0.010	<0.010	<0.010	<0.010	N/A	N/A	<0.050	<0.050	N/A
PCY-AOC2-SB43	4/29/2003	5	9-10	N/A	<1	<1	<1	<1	<1	N/A	N/A	<5	<5	N/A
PCY-AOC2-SB44	4/29/2003	4	3-4	N/A	<0.007	<0.010	<0.010	<0.010	<0.010	N/A	N/A	<0.050	<0.050	N/A
PCY-AOC2-SB44	4/29/2003	4	9-10	N/A	<1	<1	<1	<1	1.5	N/A	N/A	<5	<5	N/A
PCY-AOC2-SB45	4/29/2003	5	3-4	N/A	<0.007	<0.010	<0.010	<0.010	<0.010	N/A	N/A	<0.050	<0.050	N/A
PCY-AOC2-SB45	4/29/2003	5	9-10	N/A	<1	<1	<1	<1	<1	N/A	N/A	<5	<5	N/A
PCY-AOC2-SB46	4/29/2003	4	3-4	N/A	<0.007	<0.010	<0.010	<0.010	<0.010	N/A	N/A	<0.050	<0.050	N/A
PCY-AOC2-SB46	4/29/2003	4	9-10	N/A	<1	<1	<1	<1	<1	N/A	N/A	5.9	<5	N/A
PCY-AOC2-SB47	4/29/2003	5	3-4	N/A	<0.007	<0.010	<0.010	<0.010	<0.010	N/A	N/A	<0.050	<0.050	N/A
PCY-AOC2-SB47	4/29/2003	5	9-10	N/A	<1	<1	2.6	1.2	1.0	N/A	N/A	20.6	<5	N/A
PCY-AOC2-SB48	4/29/2003	5	3-4	N/A	<0.007	<0.010	<0.010	<0.010	<0.010	N/A	N/A	<0.050	<0.050	N/A
PCY-AOC2-SB48	4/29/2003	5	9-10	N/A	<1	<1	2.9	<1	<1	N/A	N/A	25.7	<5	N/A
PCY-AOC2-SB49	4/29/2003	5	3-4	N/A	<0.007	<0.010	<0.010	<0.010	<0.010	N/A	N/A	<0.050	<0.050	N/A
PCY-AOC2-SB49	4/29/2003	5	9-10	N/A	<1	<1	<1	<1	<1	N/A	N/A	<5	<5	N/A

Notes:
Bold values exceed SCTL.
J = estimate quantity, concentration below quantitation range
E = estimate quantity, concentration exceeds quantitation range
L = data above upper calibration standard

TABLE 2-3
SUMMARY OF FIXED-BASE SOIL ANALYTICAL RESULTS
AREA OF CONCERN 2 REMEDIAL ACTION PALN
NAVAL SUPPORT ACTIVITY PANAMA CITY, FLORIDA

COMPOUND	SCTL			Soil Boring Identification (PCY-AOC2-), Sample Identification, Date Collected, Depth				
				SSB01	SSB03	SSB05	SSB09	SSB10 (gw plume)
	Residential (mg/kg)	Industrial (mg/kg)	Leaching (mg/kg)	AOC2SSB0107	AOC2SSB0306	AOC2SSB0506	AOC2SSB0906	AOC2SSB1006
				5/20/1998	5/20/1998	5/20/1998	5/21/1998	5/21/1998
				7 feet	6 feet	6 feet	6 feet	6 feet
PAHs (mg/kg)								
Acenaphthene	1,900	18,000	2.1	<1.0	<0.42	<0.085	<0.53	<0.51
Acenaphthylene	1,100	11,000	27	<1.0	<0.42	<0.085	<0.53	<0.51
Anthracene	18,000	260,000	2,500	<1.0	<0.42	<0.085	<0.53	<0.51
Benzo(a)anthracene	1.4	5.0	3.2	<1.0	<0.42	0.257	<0.53	<0.51
Benzo(a)pyrene	0.1	0.5	8.0	**<1.0**	**<0.42**	**0.297**	**<0.53**	**<0.51**
Benzo(b)fluoranthene	1.4	4.8	10	<1.0	<0.42	0.268	<0.53	<0.51
Benzo(ghi)perylene	2,300	41,000	32,000	<1.0	<0.42	0.264	<0.53	<0.51
Benzo(k)fluoranthene	15	52	25	<1.0	<0.42	0.147	<0.53	<0.51
Chrysene	140	450	77	<1.0	<0.42	0.308	<0.53	<0.51
Dibenzo(a,h)anthracene	0.1	0.5	30	**<1.0**	**<0.42**	<0.085	**<0.53**	**<0.51**
Fluoranthene	2,900	48,000	1,200	<1.0	<0.42	0.459	<0.53	<0.51
Fluorene	2,200	28,000	160	<1.0	<0.42	<0.085	<0.53	<0.51
Indeno(1,2,3)pyrene	1.5	5.3	28	<1.0	<0.42	0.232	<0.53	<0.51
Naphthalene	40	270	1.7	**11.1**	<0.42	<0.085	<0.53	<0.51
1-Methylnaphthalene	68	470	2.2	**8.4**	<0.42	<0.085	<0.53	<0.51
2-Methylnaphthalene	80	560	6.1	**14.3**	<0.42	<0.085	<0.53	<0.51
Phenanthrene	2,000	30,000	250	<1.0	<0.42	0.085	<0.53	<0.51
Pyrene	2,200	37,000	880	<1.0	<0.42	0.408	<0.53	<0.51
VOAs								
Benzene	1.1	1.6	0.007	<0.14	<0.13	<0.14	<0.16	<0.16
Ethylbenzene	1,100	8,400	0.6	<0.14	<0.13	<0.14	<0.16	<0.16
Toluene	380	2,600	0.5	<0.14	<0.13	<0.14	<0.16	<0.16
Total Xylenes	5,900	40,000	0.2	**<0.42**	**<0.40**	**<0.42**	**<0.48**	**<0.46**
OTHER ORGANICS (mg/kg)								
MTBE	3,200	22,000	0.2	NS	NS	NS	NS	NS
1,2-Dichloroethane	0.5	0.7	0.01	NS	NS	NS	NS	NS
TRPH	340	2,500	340	**502**	109	20.8	14.1	17.6
RCRA METALS (mg/kg)								
Arsenic	0.80	3.7	29	NS	NS	NS	NS	NS
Barium	5,200	87,000	NC	NS	NS	NS	NS	NS
Cadmium	75	1,300	8	NS	NS	NS	NS	NS
Chromium	210	420	38	NS	NS	NS	NS	NS
Lead	400	920	NC	NS	NS	NS	NS	NS
Mercury	3.70	28	NC	NS	NS	NS	NS	NS
Selenium	390	10,000	NC	NS	NS	NS	NS	NS
Silver	390	9,100	NC	NS	NS	NS	NS	NS

TABLE 2-3 (Continued)
SUMMARY OF FIXED- : SOIL ANALYTICAL RESULTS
AREA OF CONCER.. 2 REMEDIAL ACTION PLAN
NAVAL SUPPORT ACTIVITY PANAMA CITY, FLORIDA

COMPOUND	SCTL			Soil Boring Identification (PCY-AOC2-), Sample Identification, Date Collected, Depth				
				SSB14 (gw plume)	B04	B07 (gw plume)	B10	B11
	Residential (mg/kg)	Industrial (mg/kg)	Leaching (mg/kg)	AOC2SSB1406	AOC2SLB0404	AOC2SLB0704	AOC2SLB1004	AOC2SLB1104
				5/21/1998	8/11/2000	8/11/2000	8/11/2000	8/11/2000
				6 feet	4 feet	4 feet	4 feet	4 feet
PAHs (mg/kg)								
Acenaphthene	1,900	18,000	2.1	<0.49	0.57	<0.092	<0.11	<0.87J
Acenaphthylene	1,100	11,000	27	<0.49	<0.44	<0.092	<0.11	<1.1
Anthracene	18,000	260,000	2,500	<0.49	<0.44	<0.092	<0.11	<1.1
Benzo(a)anthracene	1.4	5.0	3.2	0.341J	<0.44	0.051J	0.064J	<1.1
Benzo(a)pyrene	0.1	0.5	8.0	**0.453J**	**<0.44**	<0.092	**<0.11**	**<1.1**
Benzo(b)fluoranthene	1.4	4.8	10	0.360J	<0.44	0.057J	0.092J	<1.1
Benzo(ghi)perylene	2,300	41,000	32,000	0.308J	<0.44	<0.092	<0.11	<1.1
Benzo(k)fluoranthene	15	52	25	0.216J	<0.44	<0.092	<0.11	<1.1
Chrysene	140	450	77	0.376J	<0.44	<0.092	0.071J	<1.1
Dibenzo(a,h)anthracene	0.1	0.5	30	**<0.49**	**<0.44**	<0.092	**<0.11**	**<1.1**
Fluoranthene	2,900	48,000	1,200	0.508	0.24J	0.065J	<0.11	<1.1
Fluorene	2,200	28,000	160	<0.49	0.83	<0.092	<0.11	1.20
Indeno(1,2,3)pyrene	1.5	5.3	28	0.348J	<0.44	<0.092	<0.11	<1.1
Naphthalene	40	270	1.7	<0.49	0.47	<0.092	<0.11	0.69J
1-Methylnaphthalene	68	470	2.2	<0.49	1.80	<0.023	0.093	3.50
2-Methylnaphthalene	80	560	6.1	<0.49	1.80	<0.092	0.084J	4.70
Phenanthrene	2,000	30,000	250	0.227J	1.00	<0.092	<0.11	1.80
Pyrene	2,200	37,000	880	0.498	0.25J	0.068J	0.094J	<1.1
VOAs								
Benzene	1.1	1.6	0.007	<0.15	<0.006	<0.008	<0.008	<0.006
Ethylbenzene	1,100	8,400	0.6	<0.15	<0.006	<0.008	<0.008	<0.006
Toluene	380	2,600	0.5	<0.15	<0.006	<0.008	<0.008	<0.006
Total Xylenes	5,900	40,000	0.2	**<0.44**	<0.006	<0.008	<0.008	0.003J
OTHER ORGANICS (mg/kg)								
MTBE	3,200	22,000	0.2	NS	<0.012	<0.015	<0.016	<0.011
1,2-Dichloroethane	0.5	0.7	0.01	NS	<0.001	<0.002	<0.002	<0.001
TRPH	340	2,500	340	34.1	**17,000**	55	**4,600**	**15,000**
RCRA METALS (mg/kg)								
Arsenic	0.80	3.7	29	NS	<0.18	0.21B	0.23B	0.38B
Barium	5,200	87,000	NC	NS	1.5	3.3	1.8	4.4
Cadmium	75	1,300	8	NS	0.04B	0.11B	0.06B	0.08B
Chromium	210	420	38	NS	1.6	3.6	2.2	9.5
Lead	400	920	NC	NS	1.3	21.2	2	28.2
Mercury	3.70	28	NC	NS	<0.01	0.03B	0.01B	0.01B
Selenium	390	10,000	NC	NS	<0.26	<0.29	0.34B	0.63B
Silver	390	9,100	NC	NS	0.12B	0.47B	0.15B	<0.11

TABLE 2-3 (Continued)
SUMMARY OF FIXED-BASE SOIL ANALYTICAL RESULTS
AREA OF CONCERN 2 REMEDIAL ACTION PLAN
NAVAL SUPPORT ACTIVITY PANAMA CITY, FLORIDA

COMPOUND	SCTL			Soil Boring Identification (PCY-AOC2-), Sample Identification, Date Collected, Depth				
				SB06	SB05	SB14	SB01	SB60
				A2SL0601	A2SL0501	A2SL1401	A2GL0101	A2SL0604
	Residential (mg/kg)	Industrial (mg/kg)	Leaching (mg/kg)	5/17/2002	5/17/2002	5/17/2002	3/14/2003	3/30/2006
				5 feet	5 feet	5 feet	5 feet	4 feet
PAHs (mg/kg)								
Acenaphthene	1,900	18,000	2.1	**<15**	**<2.7**	<0.77	NS	<0.045
Acenaphthylene	1,100	11,000	27	<15	<2.7	<0.77	NS	<0.045
Anthracene	18,000	260,000	2,500	<7.4	<3.4	<0.38	NS	<0.23
Benzo(a)anthracene	1.4	5.0	3.2	**<7.4**	**<3.4**	<0.38	NS	<0.09
Benzo(a)pyrene	0.1	0.5	8.0	**<0.37**	**<0.27**	<0.077	NS	<0.09
Benzo(b)fluoranthene	1.4	4.8	10	<0.37	<0.27	<0.077	NS	<0.09
Benzo(ghi)perylene	2,300	41,000	32,000	<0.37	<0.27	<0.077	NS	<0.09
Benzo(k)fluoranthene	15	52	25	<0.37	<0.27	<0.077	NS	<0.09
Chrysene	140	450	77	<7.4	<3.4	<0.38	NS	<0.09
Dibenzo(a,h)anthracene	0.1	0.5	30	**<0.37**	**<0.27**	<0.077	NS	<0.09
Fluoranthene	2,900	48,000	1,200	<7.4	<3.4	<0.38	NS	<0.23
Fluorene	2,200	28,000	160	<7.4	<3.4	<0.38	NS	1.14
Indeno(1,2,3)pyrene	1.5	5.3	28	<0.37	<0.27	<0.077	NS	<0.09
Naphthalene	40	270	1.7	**<7.4**	<1.4	<0.38	NS	0.99
1-Methylnaphthalene	68	470	2.2	**<7.4**	<1.4	<0.38	NS	**5.00**
2-Methylnaphthalene	80	560	6.1	**<7.4**	<1.4	<0.38	NS	4.46
Phenanthrene	2,000	30,000	250	<7.4	<3.4	<0.38	NS	1.44
Pyrene	2,200	37,000	880	<7.4	<3.4	<0.38	NS	<0.23
VOAs								
Benzene	1.1	1.6	0.007	<0.33	<0.36	<0.0079	<0.0015	<0.11
Ethylbenzene	1,100	8,400	0.6	<0.33	<0.36	<0.0079	<0.0015	<0.11
Toluene	380	2,600	0.5	<0.33	<0.36	<0.0079	<0.0015	<0.11
Total Xylenes	5,900	40,000	0.2	**<0.98**	**<1.1**	<0.024	<0.0034	<0.24
OTHER ORGANICS (mg/kg)								
MTBE	3,200	22,000	0.2	**<0.33**	**<0.36**	<0.0079	<0.0015	NS
1,2-Dichloroethane	0.5	0.7	0.01	**<0.33**	**<0.36**	<0.0079	<0.0015	<0.11
TRPH	340	2,500	340	**16,000**	**14,800**	30	8.50	**8,180**
RCRA METALS (mg/kg)								
Arsenic	0.80	3.7	29	0.32U	NS	NS	0.33U	NS
Barium	5,200	87,000	NC	1.8B	NS	NS	NS	NS
Cadmium	75	1,300	8	0.030U	NS	NS	0.036U	NS
Chromium	210	420	38	1.3	NS	NS	0.26B	NS
Lead	400	920	NC	0.92B	NS	NS	0.49B	NS
Mercury	3.70	28	NC	0.012B	NS	NS	NS	NS
Selenium	390	10,000	NC	0.23U	NS	NS	NS	NS
Silver	390	9,100	NC	0.063U	NS	NS	NS	NS

TABLE 2-3 (Continued)
SUMMARY OF FIXED- SOIL ANALYTICAL RESULTS
AREA OF CONCERN 2 REMEDIAL ACTION PLAN
NAVAL SUPPORT ACTIVITY PANAMA CITY, FLORIDA

COMPOUND	SCTL			Soil Boring Identification (PCY-AOC2-), Sample Identification, Date Collected, Depth				
				SB62	SB62	SB64	SB64	SB64
				A2SL0623	A2SL0624	A2SL0642	A2SL0643	A2SL0644
	Residential (mg/kg)	Industrial (mg/kg)	Leaching (mg/kg)	3/30/2006	3/30/2006	3/30/2006	3/30/2006	3/30/2006
				3 feet	4 feet	2 feet	3 feet	4 feet
PAHs (mg/kg)								
Acenaphthene	1,900	18,000	2.1	<0.35	<0.46	<0.71	<0.74	0.92
Acenaphthylene	1,100	11,000	27	<0.35	<0.46	<0.71	<0.74	0.55
Anthracene	18,000	260,000	2,500	<0.18	<0.23	<0.35	<0.37	<0.24
Benzo(a)anthracene	1.4	5.0	3.2	<0.07	<0.091	0.057	<0.15	<0.095
Benzo(a)pyrene	0.1	0.5	8.0	0.08	<0.091	0.079	<0.15	<0.095
Benzo(b)fluoranthene	1.4	4.8	10	<0.07	<0.091	0.109	<0.15	<0.095
Benzo(ghi)perylene	2,300	41,000	32,000	<0.07	<0.091	0.059	<0.15	<0.095
Benzo(k)fluoranthene	15	52	25	<0.07	<0.091	0.064	<0.15	<0.095
Chrysene	140	450	77	<0.07	<0.091	0.079	<0.15	<0.095
Dibenzo(a,h)anthracene	0.1	0.5	30	<0.07	<0.091	<0.014	<0.15	<0.095
Fluoranthene	2,900	48,000	1,200	<0.18	<0.23	0.13	<0.37	<0.24
Fluorene	2,200	28,000	160	<0.18	<0.23	<0.35	0.86	2.86
Indeno(1,2,3)pyrene	1.5	5.3	28	<0.07	<0.091	0.06	<0.15	<0.095
Naphthalene	40	270	1.7	<0.18	0.33	<0.35	0.50	**4.67**
1-Methylnaphthalene	68	470	2.2	<0.18	1.51	<0.35	**3.47**	**16.7**
2-Methylnaphthalene	80	560	6.1	<0.18	<0.23	<0.35	3.75	**21.6**
Phenanthrene	2,000	30,000	250	<0.18	0.71	0.05	1.35	4.95
Pyrene	2,200	37,000	880	<0.18	<0.23	0.11	<0.37	<0.24
VOAs								
Benzene	1.1	1.6	0.007	<0.002	<0.11	<0.002	<0.12	<0.12
Ethylbenzene	1,100	8,400	0.6	<0.002	<0.11	<0.002	<0.12	0.37
Toluene	380	2,600	0.5	<0.002	<0.11	<0.002	<0.12	<0.12
Total Xylenes	5,900	40,000	0.2	<0.045	<0.25	<0.46	<0.26	<0.28
OTHER ORGANICS (mg/kg)								
MTBE	3,200	22,000	0.2	NS	NS	NS	NS	NS
1,2-Dichloroethane	0.5	0.7	0.01	<0.002	<0.11	<0.002	<0.12	<0.12
TRPH	340	2,500	340	**3,580**	**6,410**	**1,010**	**620**	**4,210**
RCRA METALS (mg/kg)								
Arsenic	0.80	3.7	29	NS	NS	NS	NS	NS
Barium	5,200	87,000	NC	NS	NS	NS	NS	NS
Cadmium	75	1,300	8	NS	NS	NS	NS	NS
Chromium	210	420	38	NS	NS	NS	NS	NS
Lead	400	920	NC	NS	NS	NS	NS	NS
Mercury	3.70	28	NC	NS	NS	NS	NS	NS
Selenium	390	10,000	NC	NS	NS	NS	NS	NS
Silver	390	9,100	NC	NS	NS	NS	NS	NS

Notes:
Values reported in milligrams per kilogram (mg/kg) except where noted.
J = estimated quantity less than the reporting limit but above the instrument detection limit
NS = not sampled
Concentrations exceeding SCTLs are in bold.

TABLE 2-4
SUMMARY OF MOBILE LABORATORY SCREENING RESULTS FOR GROUNDWATER
AREA OF CONCERN 2 REMEDIAL ACTION PLAN
NAVAL SUPPORT ACTIVITY PANAMA CITY, FLORIDA

Sampling Details		Laboratory Analyses								
Boring Number	Date Collected	Benzene	Toluene	Ethyl-benzene	M & P Xylenes	O Xylene	Total Xylenes	Naph-thalene	MTBE	DRO
PCY-AOC2-B01	8/10/00	N/A	N/A	N/A	N/A	N/A	N/A	N/A	N/A	4.3
PCY-AOC2-B02	8/10/00	N/A	N/A	N/A	N/A	N/A	N/A	N/A	N/A	<3.3
PCY-AOC2-B03	8/10/00	N/A	N/A	N/A	N/A	N/A	N/A	N/A	N/A	6.7
PCY-AOC2-B04	8/9/00	1J	3	1J	N/A	N/A	2J	9	N/A	7.3
PCY-AOC2-B05	8/9/00	<1	<1	<1	N/A	N/A	2J	3J	N/A	6.1
PCY-AOC2-B06	8/9/00	1J	2	<1	N/A	N/A	2J	2J	N/A	21.6
PCY-AOC2-B07	8/9/00	<1	<1	1J	N/A	N/A	3J	2J	N/A	6.3
PCY-AOC2-B08	8/9/00	<1	2	1	N/A	N/A	3J	3J	N/A	<3.3
PCY-AOC2-B09	8/9/00	<1	1	1J	N/A	N/A	3J	2J	N/A	590E
PCY-AOC2-B10	8/9/00	<1	<1	<1	N/A	N/A	2J	1J	N/A	5.9
PCY-AOC2-B11	8/10/00	<1	<1	<1	N/A	N/A	**32**	60E	N/A	<3.3
PCY-AOC2-B12	8/10/00	<1	<1	<1	N/A	N/A	<3	1J	N/A	682E
PCY-AOC2-B13	8/10/00	<1	<1	<1	N/A	N/A	<3	1J	N/A	<3.3
PCY-AOC2-B14	8/10/00	<1	<1	<1	N/A	N/A	<3	1J	N/A	<3.3
PCY-AOC2-B15	8/10/00	<1	<1	<1	N/A	N/A	<3	1J	N/A	<3.3
PCY-AOC2-B16	8/10/00	<1	<1	<1	N/A	N/A	<3	<5	N/A	<3.3
PCY-AOC2-B17	8/10/00	<1	<1	<1	N/A	N/A	<3	<5	N/A	<3.3
PCY-AOC2-B18	8/10/00	<1	<1	<1	N/A	N/A	<3	<5	N/A	9.0
PCY-AOC2-B19	8/10/00	<1	<1	<1	N/A	N/A	<3	1J	N/A	<3.3
PCY-AOC2-B20	8/10/00	N/A	N/A	N/A	N/A	N/A	N/A	N/A	N/A	<3.3
PCY-AOC2-B21	8/11/00	<1	<1	<1	N/A	N/A	<3	5	N/A	1687E
PCY-AOC2-B22	8/11/00	<1	<1	14	N/A	N/A	**67**	**58E**	N/A	371E
PCY-AOC2-B23	8/11/00	<1	<1	1	N/A	N/A	3	3J	N/A	<3.3
PCY-AOC2-B24	8/11/00	<1	<1	<1	N/A	N/A	<3	<5	N/A	<3.3
PCY-AOC2-SB01	5/13/2002	<1	<1	<1	<1	<1	N/A	<5	<5	N/A
PCY-AOC2-SB02	5/13/2002	<1	<1	<1	<1	<1	N/A	<5	<5	N/A
PCY-AOC2-SB03	5/14/2002	<1	<1	<1	<1	<1	N/A	<5	<5	N/A
PCY-AOC2-SB04	5/14/2002	<1	<1	<1	2.7	2.7	N/A	**30.0**	<5	N/A
PCY-AOC2-SB05	5/14/2002	**<2**	<2	**37**	**150**	**92**	N/A	**170**	<10	N/A

TABLE 2-4 (Continued)
SUMMARY OF MOBILE LABORATORY SCREENING RESULTS FOR GROUNDWATER
AREA OF CONCERN 2 SITE ASSESSMENT REPORT
NAVAL SUPPORT ACTIVITY PANAMA CITY, FLORIDA

Sampling Details		Laboratory Analyses								
Boring Number	Date Collected	Benzene	Toluene	Ethyl-benzene	M & P Xylenes	O Xylene	Total Xylenes	Naph-thalene	MTBE	DRO
PCY-AOC2-SB06	5/14/2002	**<10**	<10	17	**97**	**50**	N/A	**130**	<50	N/A
PCY-AOC2-SB07	5/14/2002	<1	<1	<1	<1	<1	N/A	<5	<5	N/A
PCY-AOC2-SB08	5/14/2002	<1	<1	<1	2.0	<1	N/A	<5	<5	N/A
PCY-AOC2-SB09	5/14/2002	<1	<1	<1	<1	<1	N/A	<5	<5	N/A
PCY-AOC2-SB10	5/14/2002	<1	<1	<1	<1	<1	N/A	<5	<5	N/A
PCY-AOC2-SB11	5/14/2002	**<20**	<20	<20	**110**	**26**	N/A	**<100**	**<100**	N/A
PCY-AOC2-SB12	5/14/2002	<1	<1	<1	1.2	<1	N/A	<5	<5	N/A
PCY-AOC2-SB13	5/14/2002	<1	<1	<1	1.4	<1	N/A	<5	<5	N/A
PCY-AOC2-SB14	5/15/2002	<1	<1	15	**136L**	<1	N/A	**109L**	<5	N/A
PCY-AOC2-SB15	5/15/2002	<1	<1	<1	<1	<1	N/A	<5	<5	N/A
PCY-AOC2-SB16	5/15/2002	**<10**	<10	<10	<10	<10	N/A	**40**	<50	N/A
PCY-AOC2-SB17	5/15/2002	**<20**	<20	<20	**89**	**<20**	N/A	**130**	**<100**	N/A
PCY-AOC2-SB18	5/15/2002	<1	<1	<1	<1	<1	N/A	<5	<5	N/A
PCY-AOC2-SB19	5/15/2002	<1	<1	<1	<1	<1	N/A	<5	<5	N/A
PCY-AOC2-SB20	5/15/2002	<1	<1	<1	<1	<1	N/A	<5	<5	N/A
PCY-AOC2-SB21	5/15/2002	<1	<1	2.4	1.8	<1	N/A	**22.4**	<5	N/A
PCY-AOC2-SB22	5/15/2002	**<5**	<5	25	**50**	**16**	N/A	**190**	<25	N/A
PCY-AOC2-SB23	5/15/2002	<1	<1	<1	<1	<1	N/A	<5	<5	N/A
PCY-AOC2-SB24	5/15/2002	<1	<1	<1	<1	<1	N/A	<5	<5	N/A
PCY-AOC2-SB25	5/15/2002	**<50**	**<50**	**<50**	**250**	**62**	N/A	**<250**	**<250**	N/A
PCY-AOC2-SB26	5/16/2002	<1	<1	<1	<1	<1	N/A	<5	<5	N/A
PCY-AOC2-SB27	5/16/2002	<1	<1	6.3	<1	<1	N/A	**59.9**	<5	N/A
PCY-AOC2-SB28	5/16/2002	<1	<1	<1	<1	<1	N/A	10.5	<5	N/A
PCY-AOC2-SB29	5/16/2002	<1	<1	<1	<1	<1	N/A	<5	<5	N/A
PCY-AOC2-SB30	5/16/2002	<1	<1	<1	<1	<1	N/A	<5	<5	N/A
PCY-AOC2-SB31	5/16/2002	<1	<1	1.2	4.9	2.5	N/A	**51**	<5	N/A
PCY-AOC2-SB32	5/16/2002	**<20**	<20	**65**	**310**	**88**	N/A	**120**	**<100**	N/A
PCY-AOC2-SB33	5/16/2002	<1	<1	14.6	4.1	1.2	N/A	**259L**	<5	N/A
PCY-AOC2-SB34	5/16/2002	**<2**	<2	**43**	<2	<2	N/A	**470L**	<10	N/A

TABLE 2-4 (Continued)
SUMMARY OF MOBILE LABORATORY SCREENING RESULTS FOR GROUNDWATER
AREA OF CONCERN 2 SITE ASSESSMENT REPORT
NAVAL SUPPORT ACTIVITY PANAMA CITY, FLORIDA

Sampling Details		Laboratory Analyses								
Boring Number	Date Collected	Benzene	Toluene	Ethyl-benzene	M & P Xylenes	O Xylene	Total Xylenes	Naph-thalene	MTBE	DRO
PCY-AOC2-SB35	5/16/2002	<1	<1	<1	1.2	<1	N/A	**80.9**	<5	N/A
PCY-AOC2-SB36	5/16/2002	<1	<1	<1	1.0	<1	N/A	5.2	<5	N/A
PCY-AOC2-SB37	5/17/2003	**<10**	<10	<10	<10	<10	N/A	**<50**	<50	N/A
PCY-AOC2-SB37	4/29/2003	<1	<1	<1	<1	<1	N/A	<5	<5	N/A
PCY-AOC2-SB38	4/29/2003	<1	<1	<1	<1	<1	N/A	<5	<5	N/A
PCY-AOC2-SB39	4/29/2003	<1	<1	<1	<1	<1	N/A	<5	<5	N/A
PCY-AOC2-SB40	4/29/2003	<1	<1	<1	<1	<1	N/A	<5	<5	N/A
PCY-AOC2-SB41	4/29/2003	<1	<1	<1	<1	<1	N/A	<5	<5	N/A
PCY-AOC2-SB42	4/29/2003	<1	<1	<1	<1	<1	N/A	<5	<5	N/A
PCY-AOC2-SB43	4/29/2003	<1	<1	<1	<1	<1	N/A	<5	<5	N/A
PCY-AOC2-SB44	4/29/2003	<1	<1	<1	1.5	<1	N/A	<5	<5	N/A
PCY-AOC2-SB45	4/29/2003	<1	<1	<1	<1	<1	N/A	<5	<5	N/A
PCY-AOC2-SB46	4/29/2003	<1	<1	<1	<1	<1	N/A	5.9	<5	N/A
PCY-AOC2-SB47	4/29/2003	<1	<1	2.6	1.2	1.0	N/A	**20.0**	<5	N/A
PCY-AOC2-SB48	4/29/2003	<1	<1	2.9	<1	<1	N/A	**26.0**	<5	N/A
PCY-AOC2-SB49	4/29/2003	<1	<1	<1	<1	<1	N/A	<5	<5	N/A

Notes:
All values are micrograms per liter (µg/L).
Bold values exceed GCTL.
E = estimate quantity, concentration exceeds quanitation range

TABLE 2-5
SUMMARY OF FIXED-BASE GROUNDWATER ANALYTICAL RESULTS
AREA OF CONCERN 2 REMEDIAL ACTION PLAN
NAVAL SUPPORT ACTIVITY PANAMA CITY, FLORIDA

COMPOUND	GCTL	NADC (Source)	Monitoring Well Identification, Sample Identification, Date Collected				
			PCY-1-1D	PCY-1-1S	PCY-1-3	PCY-AOC2-P01	PCY-AOC2-PZ3
			1GLM1D01	1GLM1S01	PCY-1-3-001	A2GLMP0101	A2GLMP20301
			3/11/2004	3/11/2004	9/2/1999	5/8/2003	5/21/2003
PAHs							
Acenaphthene	20	200	<4.3	<4.2	<1.0	<0.21	<0.20
Acenaphthylene	210	2,100	<4.3	<4.2	<1.0	<1.1	0.73
Anthracene	2,100	21,000	<2.1	<2.1	<1.0	<0.11	<0.10
Benzo(a)anthracene	0.2	20	**<0.11**	<0.10	<0.15	0.01J	<0.01
Benzo(a)pyrene	0.2	20	<0.11	<0.10	<0.15	<0.11	<0.10
Benzo(b)fluoranthene	0.2	20	<0.11	<0.10	<0.15	<0.057	<0.057
Benzo(ghi)perylene	210	2,100	<0.21	<0.21	<0.15	<0.21	<0.20
Benzo(k)fluoranthene	0.5	50	<0.21	<0.21	<0.15	<0.84	0.19
Chrysene	4.8	480	<2.1	<2.1	<0.15	0.03	0.01
Dibenzo(a,h)anthracene	0.2	20	**<0.21**	**<0.21**	<0.15	**<0.21**	<0.20
Fluoranthene	280	2,800	<2.1	<2.1	<1.0	<1.1	<1.0
Fluorene	280	2,800	<2.1	<2.1	<1.0	0.27J	<0.40
Indeno(1,2,3)pyrene	0.2	20	<0.11	<0.10	<0.15	<0.042	<0.042
Naphthalene	20	200	<2.1	<2.1	<1.0	<2.1	<1.0
1-Methylnaphthalene	20	200	<2.1	<2.1	<1.0	2.6	<1.0
2-Methylnaphthalene	20	200	<2.1	<2.1	<1.0	<1.1	<1.0
Phenanthrene	120	2,100	<2.1	<2.1	<1.0	0.52	<0.05
Pyrene	210	2,100	<2.1	<2.1	<1.0	0.03	0.01
VOAs							
Benzene	1	100	<1.0	<1.0	<1.0	<1.0	<1.0
Ethylbenzene	30	300	<1.0	<1.0	<1.0	<1.0	0.73
Toluene	40	400	<1.0	<1.0	<1.0	<1.0	<1.0
Total Xylenes	20	200	<3.0	<3.0	<3.0	2.1	2.0
OTHER ORGANICS							
1,2-EDB	0.02	2	<0.019	<0.018	NS	<0.020	<0.020
1,2-Dichloroethane	3	300	<1.0	<1.0	<1.0	<1.0	<1.0
MTBE	50	500	<1.0	<1.0	<1.0	<1.0	<1.0
TRPH (mg/L)	5	50,000	<0.26	0.246J	<0.50	**9.8**	0.89
Lead	15	150	1.2U	4.0B	NS	0.84U	6.6

TABLE 2-5 (Continued)
SUMMARY OF FIXED-BASE GROUNDWATER ANALYTICAL RESULTS
AREA OF CONCERN 2 REMEDIAL ACTION PLAN
NAVAL SUPPORT ACTIVITY PANAMA CITY, FLORIDA

COMPOUND	GCTL	NADC (Source)	Monitoring Well Identification, Sample Identification, Date Collected				
			PCY-AOC2-PZ4	PCY-AOC2-PZ5	PCY-AOC2-MW01	PCY-AOC2-MW02D	PCY-AOC2-MW03
			PZ-4-001	PZ-5-001	A2GLM0102	A2GLM02D02	A2GLMW0301
			9/1/1999	9/1/1999	3/12/2004	3/12/2004	5/8/2003
PAHs							
Acenaphthene	20	200	<1.1	<1.0	<4.2	<4.3	<0.20
Acenaphthylene	210	2,100	<1.1	<1.0	<4.2	<4.3	7.5
Anthracene	2,100	21,000	<1.1	<1.0	<2.1	<2.2	<0.10
Benzo(a)anthracene	0.2	20	<0.16	<0.15	<0.10	<0.11	<0.010
Benzo(a)pyrene	0.2	20	<0.16	<0.15	<0.10	<0.11	<0.10
Benzo(b)fluoranthene	0.2	20	<0.16	<0.15	<0.10	<0.11	<0.057
Benzo(ghi)perylene	210	2,100	<0.16	<0.15	<0.21	<0.22	<0.20
Benzo(k)fluoranthene	0.5	50	<0.16	<0.15	<0.21	<0.22	<0.80
Chrysene	4.8	480	<0.16	<0.15	<2.1	<2.2	0.01J
Dibenzo(a,h)anthracene	0.2	20	<0.16	<0.15	**<0.21**	**<0.22**	<0.20
Fluoranthene	280	2,800	<1.1	<1.0	<2.1	<2.2	<1.0
Fluorene	280	2,800	<1.1	<1.0	<2.1	<2.2	0.1J
Indeno(1,2,3)pyrene	0.2	20	<0.16	<0.15	<0.10	<0.11	<0.042
Naphthalene	20	200	<1.1	<1.0	<2.1	<2.2	3.8
1-Methylnaphthalene	20	200	<1.1	<1.0	<2.1	<2.2	<1.0
2-Methylnaphthalene	20	200	<1.1	<1.0	<2.1	<2.2	<1.0
Phenanthrene	120	2,100	<1.1	<1.0	<2.1	<2.2	0.02
Pyrene	210	2,100	<1.1	<1.0	<2.1	<2.2	<0.01
VOAs							
Benzene	1	100	<1.0	<1.0	<1.0	<1.0	<1.0
Ethylbenzene	30	300	<1.0	<1.0	<1.0	0.54J	1.9
Toluene	40	400	<1.0	<1.0	<1.0	<1.0	<1.0
Total Xylenes	20	200	<3.0	<3.0	<3.0	2.8J	5.2
OTHER ORGANICS							
1,2-EDB	0.02	2	NS	NS	<0.019	<0.019	<0.020
1,2-Dichloroethane	3	300	<1.0	<1.0	<1.0	<1.0	<1.0
MTBE	50	500	<1.0	<1.0	<1.0	<1.0	<1.0
TRPH (mg/L)	5	50,000	<0.50	<0.50	0.219J	<0.26	1.10J
Lead	15	150	NS	NS	1.2U	1.2U	1.2U

TABLE 2-5 (Continued)
SUMMARY OF FIXED-BASE GROUNDWATER ANALYTICAL RESULTS
AREA OF CONCERN 2 REMEDIAL ACTION PLAN
NAVAL SUPPORT ACTIVITY PANAMA CITY, FLORIDA

COMPOUND	GCTL	NADC (Source)	Monitoring Well Identification, Sample Identification, Date Collected				
			PCY-AOC2-MW04D	PCY-AOC2-MW05	PCY-AOC2-MW06D	PCY-AOC2-MW07	PCY-AOC2-MW08
			A2GLMW04D01	A2GLMW0501	A2GLMW06D01	PCY-AOC2-MW07-001	A2GLMW0801
			5/8/2003	5/8/2003	5/21/2003	10/8/1998	5/21/2003
PAHs							
Acenaphthene	20	200	0.09J	<0.21	4.2	<1.0	0.25
Acenaphthylene	210	2,100	<1.0	<1.1	0.49J	<1.0	0.48J
Anthracene	2,100	21,000	<0.10	0.18	<1.1	<1.0	0.29
Benzo(a)anthracene	0.2	20	<0.010	<0.01	0.05	<0.15	<0.01
Benzo(a)pyrene	0.2	20	<0.10	<0.11	**2.8**	<0.15	<0.11
Benzo(b)fluoranthene	0.2	20	<0.057	<0.057	**31**	<0.15	**0.61**
Benzo(ghi)perylene	210	2,100	<0.20	1.5	3.5	<0.15	<0.21
Benzo(k)fluoranthene	0.5	50	<0.80	0.87	**31**	<0.15	<0.84
Chrysene	4.8	480	<0.01	<0.01	0.21	<0.15	<0.01
Dibenzo(a,h)anthracene	0.2	20	<0.20	**<0.21**	**4.2**	<0.15	**<0.21**
Fluoranthene	280	2,800	<1.0	<1.1	<1.1	<1.0	1.4
Fluorene	280	2,800	<0.40	1.8	42	<1.0	1.5
Indeno(1,2,3)pyrene	0.2	20	<0.042	<0.042	**1.4**	<0.15	<0.042
Naphthalene	20	200	<2.0	**26**	<2.1	<1.0	7.2
1-Methylnaphthalene	20	200	<1.0	<1.1	1.8	5.8	3.3
2-Methylnaphthalene	20	200	<1.0	<1.1	<1.1	<1.0	4.3
Phenanthrene	120	2,100	0.01J	<0.05	0.74	1.91	0.08
Pyrene	210	2,100	<0.01	0.01	0.11	<1.0	0.02
VOAs							
Benzene	1	100	<1.0	<1.0	<1.0	<1.0	<1.0
Ethylbenzene	30	300	<1.0	<1.0	<1.0	<1.0	0.73J
Toluene	40	400	<1.0	<1.0	<1.0	<1.0	<1.0
Total Xylenes	20	200	<1.0	<1.0	<1.0	<3.0	2.0
OTHER ORGANICS							
1,2-EDB	0.02	2	<0.020	<0.020	<0.020	<0.020	<0.020
1,2-Dichloroethane	3	300	<1.0	<1.0	<1.0	<1.0	<1.0
MTBE	50	500	<1.0	<1.0	<1.0	<1.0	<1.0
TRPH (mg/L)	5	50,000	<0.17UJ	**6.9J**	0.31	**7.22**	3.8
Lead	15	150	1.5U	0.96U	<2.2	<3.0	5.2

TABLE 2-5 (Continued)
SUMMARY OF FIXED-BASE GROUNDWATER ANALYTICAL RESULTS
AREA OF CONCERN 2 REMEDIAL ACTION PLAN
NAVAL SUPPORT ACTIVITY PANAMA CITY, FLORIDA

COMPOUND	GCTL	NADC (Source)	Monitoring Well Identification, Sample Identification, Date Collected				
			PCY-AOC2-MW09	PCY-AOC2-MW10	PCY-AOC2-MW11	PCY-AOC2-MW12D	PCY-AOC2-MW13
			A2GLMW0901	A2GLM1002	A2GLM1102	A2GLM12D02	A2GLM1302
			5/8/2003	3/12/2004	3/12/2004	3/10/2004	3/12/2004
PAHs							
Acenaphthene	20	200	<0.21	<4.1	<4.3	<4.2	<4.3
Acenaphthylene	210	2,100	<1.1	<4.1	<4.3	<4.2	<4.3
Anthracene	2,100	21,000	<0.11	<2.1	<2.2	<2.1	<2.2
Benzo(a)anthracene	0.2	20	<0.01	<0.10	<0.11	<0.10	<0.11
Benzo(a)pyrene	0.2	20	<0.11	<0.10	<0.11	<0.10	<0.11
Benzo(b)fluoranthene	0.2	20	<0.057	<0.10	<0.11	<0.10	<0.11
Benzo(ghi)perylene	210	2,100	<0.21	<0.21	<0.22	<0.10	<0.22
Benzo(k)fluoranthene	0.5	50	<0.84	<0.21	<0.22	<0.10	<0.22
Chrysene	4.8	480	0.02	<2.1	<2.2	<1.0	<2.2
Dibenzo(a,h)anthracene	0.2	20	<0.21	<0.21	<0.22	<0.10	<0.22
Fluoranthene	280	2,800	<1.1	<2.1	<2.2	<2.1	<2.2
Fluorene	280	2,800	0.97	<2.1	<2.2	<2.1	1.7J
Indeno(1,2,3)pyrene	0.2	20	<0.042	<0.10	<0.11	<0.10	<0.11
Naphthalene	20	200	**37**	<2.1	<2.2	<2.1	<2.2
1-Methylnaphthalene	20	200	<1.1	<2.1	<2.2	<2.1	<2.2
2-Methylnaphthalene	20	200	<1.1	<2.1	<2.2	<2.1	<2.2
Phenanthrene	120	2,100	<0.05	<2.1	<2.2	<2.1	<2.2
Pyrene	210	2,100	<0.01	<2.1	<2.2	<2.1	<2.2
VOAs							
Benzene	1	100	<1.0	<1.0	<1.0	<1.0	<1.0
Ethylbenzene	30	300	5.1	<1.0	<1.0	<1.0	<1.0
Toluene	40	400	<1.0	<1.0	<1.0	<1.0	<1.0
Total Xylenes	20	200	<1.0	<3.0	<3.0	<3.0	<3.0
OTHER ORGANICS							
1,2-EDB	0.02	2	<0.020	<0.018	<0.019	<0.019	<0.018
1,2-Dichloroethane	3	300	<1.0	<1.0	<1.0	<1.0	<1.0
MTBE	50	500	<1.0	<1.0	<1.0	<1.0	<1.0
TRPH (mg/L)	5	50,000	5.0J	<0.27	<0.27	<0.26	3.62
Lead	15	150	2.1U	1.2U	2.2B	1.2U	1.3B

TABLE 2-5 (Continued)
SUMMARY OF FIXED-BASE GROUNDWATER ANALYTICAL RESULTS
AREA OF CONCERN 2 REMEDIAL ACTION PLAN
NAVAL SUPPORT ACTIVITY PANAMA CITY, FLORIDA

COMPOUND	GCTL	NADC (Source)	Monitoring Well Identification, Sample Identification, Date Collected				
			PCY-AOC2-MW14	PCY-AOC2-MW15	PCY-AOC2-MW16	PCY-AOC2-MW17	PCY-AOC2-MW18
			A2GLM1402	A2GLM1502	A2GLM1602	A2GLM1702	A2GLM1802
			3/10/2004	3/10/2004	3/13/2004	3/10/2004	3/15/2004
PAHs							
Acenaphthene	20	200	<4.3	<4.0	<4.3	<4.3	<4.3
Acenaphthylene	210	2,100	<4.3	<4.0	<4.3	<4.3	<4.3
Anthracene	2,100	21,000	<2.2	<2.0	<2.1	<2.2	<2.1
Benzo(a)anthracene	0.2	20	**0.23**	<0.10	<0.11	<0.11	<0.11
Benzo(a)pyrene	0.2	20	**0.30**	<0.10	<0.11	<0.11	<0.11
Benzo(b)fluoranthene	0.2	20	**0.27**	<0.10	<0.11	<0.11	<0.11
Benzo(ghi)perylene	210	2,100	0.28	<0.20	<0.21	<0.22	<0.21
Benzo(k)fluoranthene	0.5	50	0.16J	<0.20	<0.21	<0.22	<0.21
Chrysene	4.8	480	<2.2	<2.0	<2.1	<2.2	<2.1
Dibenzo(a,h)anthracene	0.2	20	**<0.22**	<0.20	**<0.21**	**<0.22**	**<0.21**
Fluoranthene	280	2,800	<2.2	<2.0	<2.1	<2.2	<2.1
Fluorene	280	2,800	<2.2	3.4	<2.1	<2.2	1.4J
Indeno(1,2,3)pyrene	0.2	20	**0.27**	<0.10	<0.11	<0.11	<0.11
Naphthalene	20	200	<2.2	6.4	<2.1	<2.2	10.7
1-Methylnaphthalene	20	200	<2.2	8.5	<2.1	<2.2	11.6
2-Methylnaphthalene	20	200	<2.2	6.6	<2.1	<2.2	8.2
Phenanthrene	120	2,100	<2.2	<0.20	<2.1	<2.2	<2.1
Pyrene	210	2,100	<2.2	<0.20	<2.1	<2.2	<2.1
VOAs							
Benzene	1	100	<1.0	<1.0	<1.0	<1.0	<1.0
Ethylbenzene	30	300	<1.0	3.4	<1.0	<1.0	1.7
Toluene	40	400	<1.0	<1.0	<1.0	<1.0	<1.0
Total Xylenes	20	200	<3.0	<3.0	<3.0	<3.0	<3.0
OTHER ORGANICS							
1,2-EDB	0.02	2	<0.019	<0.018	<0.019	<0.019	<0.018
1,2-Dichloroethane	3	300	<1.0	<1.0	<1.0	<1.0	<1.0
MTBE	50	500	<1.0	<1.0	<1.0	<1.0	<1.0
TRPH (mg/L)	5	50,000	0.435	2.26	<0.27	<0.26	1.59
Lead	15	150	1.2U	1.2U	1.2U	1.2U	1.2U

TABLE 2-5 (Continued)
SUMMARY OF FIXED-BASE GROUNDWATER ANALYTICAL RESULTS
AREA OF CONCERN 2 REMEDIAL ACTION PLAN
NAVAL SUPPORT ACTIVITY PANAMA CITY, FLORIDA

COMPOUND	GCTL	NADC (Source)	Monitoring Well Identification, Sample Identification, Date Collected				
			PCY-AOC2-MW19	PCY-AOC2-MW20	PCY-AOC2-MW21	PCY-AOC2-MW22	PCY-AOC2-MW23
			A2GLM1902	A2GLM2002	A2GLM2102	A2GLMW2201	A2GLMW2301
			3/15/2004	3/14/2004	3/10/2004	5/8/2003	5/9/2003
PAHs							
Acenaphthene	20	200	<4.3	<4.3	<4.3	<0.21	0.14J
Acenaphthylene	210	2,100	<4.3	<4.3	<4.3	<1.1	0.87J
Anthracene	2,100	21,000	<2.2	<2.2	<2.1	<0.11	<0.11
Benzo(a)anthracene	0.2	20	<0.11	<0.11	<0.10	<0.01	<0.01
Benzo(a)pyrene	0.2	20	<0.11	<0.11	<0.10	<0.11	<0.11
Benzo(b)fluoranthene	0.2	20	<0.11	<0.11	<0.10	<0.057	<0.057
Benzo(ghi)perylene	210	2,100	<0.22	<0.22	<0.21	<0.21	1.1
Benzo(k)fluoranthene	0.5	50	<0.22	<0.22	<0.21	<0.84	<0.84
Chrysene	4.8	480	<2.2	<2.2	<2.1	<0.01	0.02
Dibenzo(a,h)anthracene	0.2	20	**<0.22**	**<0.22**	**<0.21**	**<0.21**	**<0.21**
Fluoranthene	280	2,800	<2.2	<2.2	<2.1	<1.1	<1.1
Fluorene	280	2,800	<2.2	<2.2	2.3	<0.42	<0.42
Indeno(1,2,3)pyrene	0.2	20	<0.11	<0.11	<0.10	<0.042	<0.042
Naphthalene	20	200	<2.2	<2.2	**26.7**	<2.1	<2.1
1-Methylnaphthalene	20	200	<2.2	12.4	**21.3**	<1.1	<1.1
2-Methylnaphthalene	20	200	<2.2	**34.7**	**22.7**	<1.1	<1.1
Phenanthrene	120	2,100	<2.2	<2.2	<2.1	0.02J	<0.05
Pyrene	210	2,100	<2.2	<2.2	<2.1	<0.01	<0.01
VOAs							
Benzene	1	100	<1.0	<1.0	<1.0	<1.0	<1.0
Ethylbenzene	30	300	<1.0	<1.0	4.0	<1.0	<1.0
Toluene	40	400	<1.0	<1.0	<1.0	<1.0	<1.0
Total Xylenes	20	200	<3.0	2.3J	<3.0	<1.0	4.0
OTHER ORGANICS							
1,2-EDB	0.02	2	<0.019	<0.019	<0.018	<0.020	<0.12
1,2-Dichloroethane	3	300	<1.0	<1.0	<1.0	<1.0	<1.0
MTBE	50	500	<1.0	<1.0	<1.0	<1.0	<1.0
TRPH (mg/L)	5	50,000	<0.27	2.10	**5.94**	<0.18	1.1
Lead	15	150	1.2U	1.2U	1.2U	0.96B	2.2U

TABLE 2-5 (Continued)
SUMMARY OF FIXED-BASE GROUNDWATER ANALYTICAL RESULTS
AREA OF CONCERN 2 REMEDIAL ACTION PLAN
NAVAL SUPPORT ACTIVITY PANAMA CITY, FLORIDA

COMPOUND	GCTL	NADC (Source)	Monitoring Well Identification, Sample Identification, Date Collected				
			PCY-AOC2-MW24	PCY-AOC2-MW25	PCY-AOC2-MW26D	PCY-333-TW01	PCY-333-MW01
			A2GLMW2401	A2GLM2501	A2GLM26D01	333GLT0102	333GLMW0101
			5/8/2003	3/12/2004	3/14/2004	3/11/2004	5/9/2003
PAHs							
Acenaphthene	20	200	0.12J	<4.1	<4.3	<4.2	<0.21
Acenaphthylene	210	2,100	2.3	<4.1	<4.3	<4.2	<1.1
Anthracene	2,100	21,000	<0.11	<2.1	<2.1	<2.1	<0.11
Benzo(a)anthracene	0.2	20	<0.01	<0.10	<0.10	<0.10	<0.01
Benzo(a)pyrene	0.2	20	<0.11	<0.10	<0.10	<0.10	<0.11
Benzo(b)fluoranthene	0.2	20	<0.057	<0.10	<0.10	<0.10	<0.057
Benzo(ghi)perylene	210	2,100	<0.21	<0.21	<0.21	<0.21	<0.21
Benzo(k)fluoranthene	0.5	50	<0.84	<0.21	<0.21	<0.21	<0.84
Chrysene	4.8	480	<0.01	<2.1	<2.1	<2.1	0.01J
Dibenzo(a,h)anthracene	0.2	20	<0.21	<0.21	<0.21	<0.21	<0.21
Fluoranthene	280	2,800	<1.1	<2.1	<2.1	<2.1	<1.1
Fluorene	280	2,800	<0.42	<2.1	<2.1	<2.1	<0.42
Indeno(1,2,3)pyrene	0.2	20	<0.042	<0.10	<0.10	<0.10	<0.042
Naphthalene	20	200	<2.1	<2.1	<2.1	4.2	<2.1
1-Methylnaphthalene	20	200	0.26J	<2.1	<2.1	<2.1	<1.1
2-Methylnaphthalene	20	200	<1.1	<2.1	<2.1	<2.1	<1.1
Phenanthrene	120	2,100	<0.05	<2.1	<2.1	<2.1	0.01J
Pyrene	210	2,100	<0.01	<2.1	<2.1	<2.1	<0.01
VOAs							
Benzene	1	100	<1.0	<1.0	<1.0	<1.0	<1.0
Ethylbenzene	30	300	<1.0	<1.0	<1.0	<1.0	<1.0
Toluene	40	400	<1.0	<1.0	<1.0	<1.0	<1.0
Total Xylenes	20	200	<1.0	<3.0	<3.0	1.2J	<1.0
OTHER ORGANICS							
1,2-EDB	0.02	2	<0.020	<0.018	<0.018	<0.019	<0.020
1,2-Dichloroethane	3	300	<1.0	<1.0	<1.0	<1.0	<1.0
MTBE	50	500	<1.0	<1.0	<1.0	<1.0	<1.0
TRPH (mg/L)	5	50,000	2.5	1.76	<0.27	4.44	<0.18
Lead	15	150	1.4U	1.2U	10.1	1.2U	2.7U

TABLE 2-5 (Continued)
SUMMARY OF FIXED-BASE GROUNDWATER ANALYTICAL RESULTS
AREA OF CONCERN 2 REMEDIAL ACTION PLAN
NAVAL SUPPORT ACTIVITY PANAMA CITY, FLORIDA

COMPOUND	GCTL	NADC (Source)	Monitoring Well Identification, Sample Identification, Date Collected				
			PCY-333-MW02	PCY-333-MW03	PCY-333-MW04	PCY-14-MW02S	PCY-14-MW02D
			333GLMW0201	333GLMW0301	333GLMW0401	PCY-014-2S-001	14GLMW2D01
			5/21/2003	5/21/2003	5/8/2003	9/2/1999	5/9/2003
PAHs							
Acenaphthene	20	200	<0.20	<0.20	<0.20	<1.0	<0.21
Acenaphthylene	210	2,100	<1.0	<1.0	<1.1	<1.0	<1.1
Anthracene	2,100	21,000	<0.10	<0.10	<0.10	<1.0	<0.11
Benzo(a)anthracene	0.2	20	<0.01	<0.01	<0.01	<0.16	<0.01
Benzo(a)pyrene	0.2	20	<0.10	<0.10	0.050J	<0.16	<0.11
Benzo(b)fluoranthene	0.2	20	<0.057	<0.057	<0.057	<0.16	<0.057
Benzo(ghi)perylene	210	2,100	<0.20	<0.20	<0.20	<0.16	<0.21
Benzo(k)fluoranthene	0.5	50	<0.80	<0.80	<0.80	<0.16	<0.84
Chrysene	4.8	480	<0.01	0.01J	0.01	<0.16	<0.01
Dibenzo(a,h)anthracene	0.2	20	<0.20	<0.20	<0.20	<0.16	**<0.21**
Fluoranthene	280	2,800	<1.0	<1.0	<1.10	<1.0	<1.1
Fluorene	280	2,800	<0.40	<0.40	<0.40	<1.0	<0.42
Indeno(1,2,3)pyrene	0.2	20	<0.042	<0.042	<0.042	<0.16	<0.042
Naphthalene	20	200	<2.0	<2.0	**29J**	8.9	<2.1
1-Methylnaphthalene	20	200	<1.0	<1.0	4.2J	6.4	<1.1
2-Methylnaphthalene	20	200	<1.0	<1.0	<1.10	6.4	<1.1
Phenanthrene	120	2,100	0.01J	0.01J	<0.05	1.1	<0.05
Pyrene	210	2,100	<0.01	<0.01	<0.01	<1.0	<0.01
VOAs							
Benzene	1	100	<1.0	<1.0	<1.0	<1.0	<1.0
Ethylbenzene	30	300	<1.0	<1.0	<1.0	2.4	<1.0
Toluene	40	400	<1.0	<1.0	<1.0	<1.0	<1.0
Total Xylenes	20	200	<1.0	<1.0	<1.0	13.0	<1.0
OTHER ORGANICS							
1,2-EDB	0.02	2	<0.020	<0.020	<0.020	NS	<0.020
1,2-Dichloroethane	3	300	<1.0	<1.0	<1.0	<1.0	<1.0
MTBE	50	500	<1.0	<1.0	2.5	<1.0	<1.0
TRPH (mg/L)	5	50,000	0.35	0.54	4.5J	**6.96**	<0.18
Lead	15	150	<2.2	8.7	3.5U	NS	1.1U

TABLE 2-5 (Continued)
SUMMARY OF FIXED-BASE GROUNDWATER ANALYTICAL RESULTS
AREA OF CONCERN 2 REMEDIAL ACTION PLAN
NAVAL SUPPORT ACTIVITY PANAMA CITY, FLORIDA

COMPOUND	GCTL	NADC (Source)	Monitoring Well Identification, Sample Identification, Date Collected				
			PCY-14-MW03S	PCY-AOC2-P01	PCY-14-MW02S	PCY-AOC2-MW11	PCY-AOC2-MW13
			14GLMW3S01	A2GLMP0103	PCY0142S002	A2GLM1103	A2GLM1303
			5/9/2003	3/28/2006	3/28/2006	3/28/2006	3/28/2006
PAHs							
Acenaphthene	20	200	<0.21	0.64	0.63	<0.50	0.63
Acenaphthylene	210	2,100	<1.1	<0.49	<0.49	<0.50	<0.48
Anthracene	2,100	21,000	<0.11	<0.49	<0.49	<0.50	<0.48
Benzo(a)anthracene	0.2	20	<0.01	<0.049	<0.049	<0.500	<0.048
Benzo(a)pyrene	0.2	20	<0.11	<0.097	<0.097	<0.099	<0.096
Benzo(b)fluoranthene	0.2	20	<0.057	<0.049	<0.049	<0.50	<0.048
Benzo(ghi)perylene	210	2,100	<0.21	<0.097	<0.097	<0.099	<0.096
Benzo(k)fluoranthene	0.5	50	**<0.84**	<0.097	<0.097	<0.099	<0.096
Chrysene	4.8	480	<0.01	<0.097	<0.097	<0.099	<0.096
Dibenzo(a,h)anthracene	0.2	20	**<0.21**	<0.049	<0.049	<0.50	<0.048
Fluoranthene	280	2,800	<1.1	<0.24	<0.24	<0.25	<0.24
Fluorene	280	2,800	0.39J	1.6	1.9	0.47	2.8
Indeno(1,2,3)pyrene	0.2	20	<0.042	<0.049	<0.049	<0.50	<0.048
Naphthalene	20	200	16.0	1	3.2	0.42	12.8
1-Methylnaphthalene	20	200	<1.1	3.5	12.3	<0.25	0.65
2-Methylnaphthalene	20	200	<1.1	0.52	2.4	<0.25	<0.24
Phenanthrene	120	2,100	<0.05	<0.049	1.3	<0.50	<0.048
Pyrene	210	2,100	<0.01	<0.24	<0.24	<0.25	<0.24
VOAs							
Benzene	1	100	<1.0	<0.5	<0.5	<0.5	<0.5
Ethylbenzene	30	300	5.7	<0.5	<0.5	<0.5	8.4
Toluene	40	400	<1.0	<0.5	<0.5	<0.5	<0.5
Total Xylenes	20	200	7.2	1.8	3.9	<1.0	1.3
OTHER ORGANICS							
1,2-EDB	0.02	2	<0.020	NS	NS	NS	NS
1,2-Dichloroethane	3	300	<1.0	<0.5	<0.5	<0.5	<0.5
MTBE	50	500	<1.0	NS	NS	NS	NS
TRPH (mg/L)	5	50,000	4.3	**5.53**	**10.90**	3.63	3.43
Lead	15	150	0.81U	NS	NS	NS	NS

TABLE 2-5 (Continued)
SUMMARY OF FIXED-BASE GROUNDWATER ANALYTICAL RESULTS
AREA OF CONCERN 2 REMEDIAL ACTION PLAN
NAVAL SUPPORT ACTIVITY PANAMA CITY, FLORIDA

COMPOUND	GCTL	NADC (Source)	Monitoring Well Identification, Sample Identification, Date Collected	
			PCY-AOC2-MW18	
			A2GLM1803	
			3/28/2006	
PAHs				
Acenaphthene	20	200	0.64	
Acenaphthylene	210	2,100	<0.49	
Anthracene	2,100	21,000	<0.49	
Benzo(a)anthracene	0.2	20	<0.049	
Benzo(a)pyrene	0.2	20	<0.097	
Benzo(b)fluoranthene	0.2	20	<0.049	
Benzo(ghi)perylene	210	2,100	<0.097	
Benzo(k)fluoranthene	0.5	50	<0.097	
Chrysene	4.8	480	<0.097	
Dibenzo(a,h)anthracene	0.2	20	<0.049	
Fluoranthene	280	2,800	<0.24	
Fluorene	280	2,800	1.5	
Indeno(1,2,3)pyrene	0.2	20	<0.049	
Naphthalene	20	200	6.9	
1-Methylnaphthalene	20	200	3.3	
2-Methylnaphthalene	20	200	4.5	
Phenanthrene	120	2,100	<0.049	
Pyrene	210	2,100	<0.24	
VOAs				
Benzene	1	100	<0.5	
Ethylbenzene	30	300	3.2	
Toluene	40	400	<0.5	
Total Xylenes	20	200	<1.0	
OTHER ORGANICS				
1,2-EDB	0.02	2	NS	
1,2-Dichloroethane	3	300	<0.5	
MTBE	50	500	NS	
TRPH (mg/L)	5	50,000	2.87	
Lead	15	150	NS	

Notes:
Values reported in µg/L except where noted.
GCTL as defined by Chapter 62-777, FAC.
J = estimated quantity less than the reporting limit but above the instrument detection limit
B = indicates result greater than the instrument detection limit but less than the reporting limit
U = indicates result less than the instrument detection limit

EDB = 1,2-dibromoethane
NS = not sampled
Concentrations exceeding GCTLs are in bold.

TABLE 2-6
GROUNDWATER ELEVATION AND FREE PRODUCT THICKNESS SUMMARY
AREA OF CONCERN 2 REMEDIAL ACTION PLAN
NAVAL SUPPORT ACTIVITY PANAMA CITY, FLORIDA

Well Number	PCY-AOC2-MW01			PCY-AOC2-MW02D			PCY-AOC2-MW03			PCY-AOC2-MW04D			PCY-AOC2-MW05			PCY-AOC2-MW6D		
Well Diameter	2 Inch			2 Inch			2 Inch			2 Inch			2 Inch			2 Inch		
Well Depth	12.18 Feet			30 Feet			13.80 Feet			27.8 Feet			13.80 Feet			27.25 Feet		
Screened Interval	10 Feet			5 Feet			10 Feet			5 Feet			10 Feet			5 Feet		
TOC Elevation	6.24			6.39			8.36			8.38			8.45			8.52		
Date	ELEV	DTW	FP	ELEV	DTW	FP	ELEV	DTW	FP	ELEV	DTW	FP	ELEV	DTW	FP	ELEV	DTW	FP
10/5/1998	2.30	3.94	ND	2.50	3.89	ND	3.27	5.09	ND	3.63	4.75	ND	4.33	4.12	ND	4.30	4.22	ND
9/1/1999	-----	-----	-----	-----	-----	-----	2.79	5.57	ND	2.87	5.51	ND	3.32	5.13	ND	3.27	5.25	ND
5/7/2003	2.12	4.12	ND	-----	-----	-----	3.02	5.34	ND	2.80	5.58	ND	3.48	4.97	ND	3.41	5.11	ND
3/11/2004	1.94	4.30	ND	2.03	4.36	ND	2.95	5.41	ND	3.25	5.13	ND	3.78	4.67	ND	3.72	4.80	ND

Well Number	PCY-AOC2-MW07			PCY-AOC2-MW08			PCY-AOC2-MW09			PCY-AOC2-MW10			PCY-AOC2-MW11			PCY-AOC2-MW12D		
Well Diameter	2 Inch			2 Inch			2 Inch			2 inch			2 inch			2 inch		
Well Depth	14 Feet			13.80 Feet			13.60 Feet			13.90 Feet			13.70 Feet			35.50 Feet		
Screened Interval	10 Feet			10 Feet			10 Feet			10 Feet			10 Feet			5 Feet		
TOC Elevation	9.10			9.66			7.78			10.07			10.05			8.01		
Date	ELEV	DTW	FP	ELEV	DTW	FP	ELEV	DTW	FP	ELEV	DTW	FP	ELEV	DTW	FP	ELEV	DTW	FP
10/5/1998	5.21	3.89	N/A	4.54	5.12	ND	3.25	4.53	ND	-----	-----	-----	-----	-----	-----	-----	-----	-----
9/1/1999	3.53	5.57	0.08	3.48	6.18	ND	2.23	5.55	ND	-----	-----	-----	-----	-----	-----	-----	-----	-----
8/22/2002	-----	-----	-----	-----	-----	-----	-----	-----	-----	5.44	4.63	ND	4.30	5.75	ND	3.13	4.88	ND
5/7/2003	3.89	5.21	0.1	4.30	5.36	ND	2.43	5.35	ND	5.20	4.87	ND	4.75	5.30	ND	3.63	4.38	ND
3/11/2004	4.35	4.75	0.08	4.01	5.65	ND	2.76	5.02	ND	5.84	4.23	ND	5.34	4.71	ND	4.00	4.01	ND

Well Number	PCY-AOC2-MW13			PCY-AOC2-MW14			PCY-AOC2-MW15			PCY-AOC2-MW16			PCY-AOC2-MW17			PCY-AOC2-MW18		
Well Diameter	2 Inch			2 Inch			2 Inch			2 Inch			2 Inch			2 Inch		
Well Depth	13.60 Feet			13.60 Feet			13 Feet			11.6 Feet			12.6 Feet			12.9 Feet		
Screened Interval	10 Feet			10 Feet			10 Feet			10 Feet			10 Feet			10 Feet		
TOC Elevation	10.07			7.49			7.87			8.62			8.51			9.12		
Date	ELEV	DTW	FP	ELEV	DTW	FP	ELEV	DTW	FP	ELEV	DTW	FP	ELEV	DTW	FP	ELEV	DTW	FP
8/22/2002	3.79	6.28	ND	2.39	5.10	ND	3.31	4.56	ND	3.69	4.93	ND	3.55	4.96	ND	4.29	4.83	ND
5/7/2003	4.09	5.98	ND	2.69	4.80	ND	3.69	4.18	ND	3.90	4.72	ND	3.96	4.55	ND	4.84	4.28	ND
3/11/2004	4.51	5.56	ND	2.99	4.50	ND	4.15	3.72	ND	4.37	4.25	ND	4.49	4.02	ND	5.40	3.72	ND

TABLE 2-6 (Continued)
GROUNDWATER ELEVATION AND FREE PRODUCT THICKNESS SUMMARY
AREA OF CONCERN 2 REMEDIAL ACTION PLAN
NAVAL SUPPORT ACTIVITY PANAMA CITY, FLORIDA

Well Number	PCY-AOC2-MW19			PCY-AOC2-MW20			PCY-AOC2-MW21			PCY-AOC2-MW22			PCY-AOC2-MW23			PCY-AOC2-MW24		
Well Diameter	2 inch			2 inch			2 inch			2 inch			2 inch			2 inch		
Well Depth	13.48 Feet			12.40 Feet			14.0 Feet			14.0 Feet			14.0 Feet			14.0 Feet		
Screened Interval	10 Feet			10 Feet			10 Feet			10 Feet			10 Feet			10 Feet		
TOC Elevation	12.63			9.71			8.44			9.15			7.18			7.33		
Date	ELEV	DTW	FP	ELEV	DTW	FP	ELEV	DTW	FP	ELEV	DTW	FP	ELEV	DTW	FP	ELEV	DTW	FP
8/22/2002	4.80	7.83	ND	3.69	6.02	ND	3.89	4.55	ND	-----	-----	-----	-----	-----	-----	-----	-----	-----
5/7/2003	5.48	7.15	ND	4.22	5.49	ND	4.31	4.13	ND	4.03	5.12	ND	3.00	4.18	ND	2.98	4.35	ND
3/11/2004	6.03	6.60	ND	4.77	4.94	ND	4.79	3.65	ND	4.45	4.70	ND	3.48	3.70	ND	3.33	4.00	ND

Well Number	PCY-AOC2-MW25			PCY-AOC2-MW26D			PCY-14-2S			PCY-14-2D			PCY-14-3S			PCY-AOC2-P01		
Well Diameter	2 inch			2 inch			2 inch			2 inch			2 inch			1.25 Inch		
Well Depth	13.5 Feet			48 Feet			14 Feet			51 Feet			14 Feet			12 Feet		
Screened Interval	10 Feet			5 Feet			10 Feet			5 Feet			10 Feet			10 Feet		
TOC Elevation	9.90			8.39			11.07			11.11			12.22			9.15		
Date	ELEV	DTW	FP	ELEV	DTW	FP	ELEV	DTW	FP	ELEV	DTW	FP	ELEV	DTW	FP	ELEV	DTW	FP
9/1/1999	-----	-----	-----	-----	-----	-----	4.05	7.02	ND	2.93	8.18	ND	3.61	8.61	ND	-----	-----	-----
5/7/2003	-----	-----	-----	-----	-----	-----	4.15	6.92	0.01	2.26	8.85	ND	3.76	8.46	ND	4.02	5.13	ND
3/11/2004	-----	-----	-----	-----	-----	-----	4.66	6.41	0.01	4.67	6.44	ND	3.82	8.40	ND	4.55	4.60	ND
3/14/2004	3.55	6.35	ND	2.56	5.83	ND	-----	-----	-----	-----	-----	-----	-----	-----	-----	-----	-----	-----

Well Number	PCY-AOC2-P02			PCY-AOC2-P03			PCY-AOC2-P05			PCY-AOC2-PZ1			PCY-AOC2-PZ3			PCY-AOC2-PZ4		
Well Diameter	1.25 Inch			1.25 Inch			1.25 Inch			2 inch			2 inch			2 inch		
Well Depth	12 Feet			12 Feet			12 Feet			14 Feet			13.10 Feet			13.20 Feet		
Screened Interval	10 Feet			10 Feet			10 Feet			10 Feet			10 Feet			10 Feet		
TOC Elevation	9.28			8.94			N/A			7.16			7.96			8.75		
Date	ELEV	DTW	FP	ELEV	DTW	FP	ELEV	DTW	FP	ELEV	DTW	FP	ELEV	DTW	FP	ELEV	DTW	FP
10/5/1998	-----	-----	-----	-----	-----	-----	-----	-----	-----	3.59	3.57	ND	3.69	4.27	ND	3.62	5.13	ND
9/1/1999	-----	-----	-----	-----	-----	-----	-----	-----	-----	-----	-----	-----	-----	-----	-----	2.86	5.89	ND
5/7/2003	3.99	5.29	ND	3.30	5.64	0.62	N/A	5.40	ND	-----	-----	-----	2.96	5.00	ND	3.19	5.56	ND
3/11/2004	4.47	4.81	0.02	3.98	4.96	0.36	N/A	4.58	ND	3.16	4.00	ND	3.29	4.67	ND	3.13	5.62	ND

TABLE 2-6 (Continued)
GROUNDWATER ELEVATION AND FREE PRODUCT THICKNESS SUMMARY
AREA OF CONCERN 2 REMEDIAL ACTION PLAN
NAVAL SUPPORT ACTIVITY PANAMA CITY, FLORIDA

Well Number	PCY-AOC2-PZ5			PCY-333-TW01			PCY-333-MW01			PCY-333-MW02			PCY-333-MW03			PCY-333-MW04		
Well Diameter	1 inch			2 inch			2 inch			2 inch			2 inch			2 inch		
Well Depth	13.60 Feet			15 Feet			13 Feet			13 Feet			13 Feet			13 Feet		
Screened Interval	10 Feet			10 Feet			10 Feet			10 Feet			10 Feet			10 Feet		
TOC Elevation	9.22			8.70			6.65			6.39			6.57			7.75		
Date	**ELEV**	**DTW**	**FP**	**ELEV**	**DTW**	**FP**	**ELEV**	**DTW**	**FP**	**ELEV**	**DTW**	**FP**	**ELEV**	**DTW**	**FP**	**ELEV**	**DTW**	**FP**
7/11/1996	-----	-----	-----	3.26	5.44	ND	2.05	4.60	ND	2.19	4.20	ND	2.26	4.31	ND	2.50	5.25	ND
11/25/1996	-----	-----	-----	1.94	6.76	ND	1.88	4.77	ND	1.99	4.4	ND	1.99	4.58	ND	1.95	5.8	ND
10/5/1998	3.47	5.75	ND	3.13	5.57	ND	2.25	4.4	ND	2.42	3.97	ND	2.50	4.07	ND	2.65	5.1	ND
9/1/1999	2.70	6.52	ND	-----	-----	-----	-----	-----	-----	-----	-----	-----	-----	-----	-----	-----	-----	-----
5/7/2003	3.09	6.13	ND	-----	-----	-----	2.32	4.33	ND	1.94	4.45	ND	1.81	4.76	ND	2.11	5.64	-----
3/11/2004	3.10	6.12	ND	2.18	6.52	ND	1.80	4.85	ND	2.04	4.35	ND	1.97	4.60	ND	2.28	5.47	ND

Well Number	PCY-307-02			PCY-307-03			PCY-307-04D			PCY-1-1			PCY-1-1S			PCY-1-1D		
Well Diameter	2 inch			2 inch			2 inch			2 inch			2			2 inch		
Well Depth	13 Feet			13 Feet			30 Feet			25 Feet			15.25 Feet			49.0 Feet		
Screened Interval	10 Feet			10 Feet			5 Feet			17 Feet			10 Feet			5 Feet		
TOC Elevation	6.15			6.01			5.96			12.16			9.48			10.52		
Date	**ELEV**	**DTW**	**FP**	**ELEV**	**DTW**	**FP**	**ELEV**	**DTW**	**FP**	**ELEV**	**DTW**	**FP**	**ELEV**	**DTW**	**FP**	**ELEV**	**DTW**	**FP**
7/11/1996	-----	-----	-----	-----	-----	-----	-----	-----	-----	-----	-----	-----	4.33	5.15	ND	-----	-----	-----
11/25/1996	-----	-----	-----	-----	-----	-----	-----	-----	-----	-----	-----	-----	2.88	6.6	ND	-----	-----	-----
10/5/1998	1.98	4.17	ND	1.86	4.15	ND	2.03	3.93	ND	-----	-----	-----	3.59	5.89	ND	-----	-----	-----
5/7/2003	-----	-----	-----	-----	-----	-----	-----	-----	-----	3.06	9.1	ND	-----	-----	-----	-----	-----	-----
3/11/2004	1.72	4.43	ND	1.66	4.35	ND	1.73	4.23	ND	5.57	6.59	ND	3.08	6.40	ND	2.52	8.00	ND

Notes:
Measurements are in feet.
TOC elevations surveyed 8/12/00 using TOC of PCY-AOC2-MW07 as benchmark.
T = trace amount of free product

Table 3-1
Chemicals of Concern and Associated Selected Soil Cleanup Target Levels

Remedial Action Plan
Area of Concern 2
NSA Panama City, Florida

Site-Specific COCs	Concentrations from Table II*
TRPHs	340 mg/kg
Acenaphthene	2.1µg/L
Benzo(a)anthracene	0.8µg/L
Benzo(a)pyrene	0.1µg/L
Dibenzo(a,h)anthracene	0.7µg/L
Naphthalene	1.2µg/L
1-Methylnaphthalene	2.2µg/L
2-Methylnaphthalene	8.5µg/L
Total Xylenes	0.2µg/L
MTBE	0.092µg/L
1,2-Dichloroethane	0.01µg/L

Notes: µg/L = micrograms per liter
*Table II, Chapter 62-777, F.A.C.

Table 3-2
Chemicals of Concern and Associated Groundwater Cleanup Target Levels

Remedial Action Plan
Area of Concern 2
NSA Panama City, Florida

Site-Specific COCs	Concentrations from Table I*
1-Methylnaphthalene	28 µg/L
2-Methylnaphthalene	28 µg/L
Benzo(a)anthracene	0.05 µg/L
Benzo(a)pyrene	0.2 µg/L
Benzo(b)fluoranthene	0.052 µg/L
Indeno(1,2,3)pyrene	0.05 µg/L
Total Xylenes	20 µg/L
Naphthalene	14 µg/L
TRPHs	5,000 µg/L

Notes: µg/L = micrograms per liter
*Table I, Chapter 62-777, F.A.C.

Table 5-1
Comparison and Rational for Selected Remedial Alternatives

Alternative Procedure Remedial Action Plan
Area of Concern 2
Naval Support Activity
Panama City, Florida

MEDIA	TECHNOLOGY	ADVANTAGES	DISADVANTAGES	SCREENING COMMENT
Soil	Bioventing	Uses readily available equipment; easy to install. Is cost competitive.	Uncertain clean-up time. Requires almost complete removal of free product prior to implementation. Cannot always achieve very low cleanup standards.	Eliminate
	Excavation and Off-Site Disposal	Source removal, short remediation time (weeks), and clean backfill.	Site conditions require special engineering and precautions. High price, transportation of contaminated soil off premises.	Retain– although difficult to excavate, assured effectiveness.
	Excavation and On-Site Treatment	Source removal, short remediation time, treated soil tested before backfilling and soil stays on-site.	High price of treatment.	Eliminate – More cost effective to dispose of soil. On-site treatment by LTTD is typically effective when > 1,000 yd^3 of soil.
	SVE	Low capital cost, readily available equipment.	Asymptotic behavior, prolonged remedial time facilitates movement of contaminants, need for pilot study.	Eliminate
Free Product	Skimmers and Hand Bailing	Relatively low cost.	Long term removal time. Effectiveness uncertain.	Eliminate – Long term removal required.
	Dewatering During Excavation	Relatively low cost. Large Radius of Influence. Low O&M Costs.	Requires offsite disposal of free product and groundwater.	Retain
	Dual-phase Extraction	Easily implementable with temporary system.	Requires off site disposal of groundwater and free product.	Retain

	Table 5-1 (Continued) **Comparison and Rational for Selected Remedial Alternatives** Remedial Action Plan Area of Concern 2 Naval Support Activity Panama City, Florida			
Ground-water	Pump and Treat	Effective contaminant removal.	Treatment system required. Long term O&M and removal time. High costs.	Retain
	Air sparging	Vapor phase and mobile free product removed simultaneously	Requires Treatment system.	Retain
	Dewatering During Excavation	Relatively low cost. Large Radius of Influence. Low O&M Costs.	Requires offsite disposal of free product and groundwater.	Retain
	Chemical Oxidation	Very effective on all petroleum products. Short remediation time. In-situ treatment.	High price of treatment. Requires treatability study. Requires removal of most free product prior to injection. May require pump and treat to avoid surface water contamination.	Eliminate – Not cost effective.

TABLE 7-1
Proposed Monitoring Plan and Treatment System Sampling

Remedial Action Plan
Area of Concern 2
Naval Support Activity
Panama City, Florida

Monitor Sample Location	Parameters		Frequency of Sampling
	Groundwater	Treatment System	
Monitoring Wells	VOCs/BTEX, PAHs, and TRPH, DO (USEPA Methods 8021, 8310, and FL-PRO)	NA	Baseline event and quarterly for one year.
Liquid Phase Carbon Effluent and NPDES	VOCs/BTEX, PAHs, and TRPH (USEPA Methods 8021, 8310, FL-PRO, and 96-Hour Acute Toxicity)	NA	Daily for the first 3 days, then weekly for the remainder of the excavation.
Air Stripper Effluent	NA	Vapor Concentration (using FID) and BTEX and TRPH (EPA Method TO18)	Daily for the first 3 days, then weekly for the remainder of the excavation
Middle Carbon and Carbon Effluent Stack	NA	Vapor Concentration (using FID) and BTEX and TRPH (EPA Method TO18)	Daily for the first 3 days, then weekly for the remainder of the excavation

Notes:

DO – Dissolved Oxygen
VOC – Volatile Organic Compounds
BTEX - Benzene, ethylbenzene, toluene, and xylenes
PAH – Polynuclear aromatic compounds
FL-PRO - Florida Petroleum Range Organics
TRPH - Total Recoverable Petroleum Hydrocarbons
NA - Not applicable

FIGURES

ACAD: 9207CM31.dwg 03/27/07 DT PIT

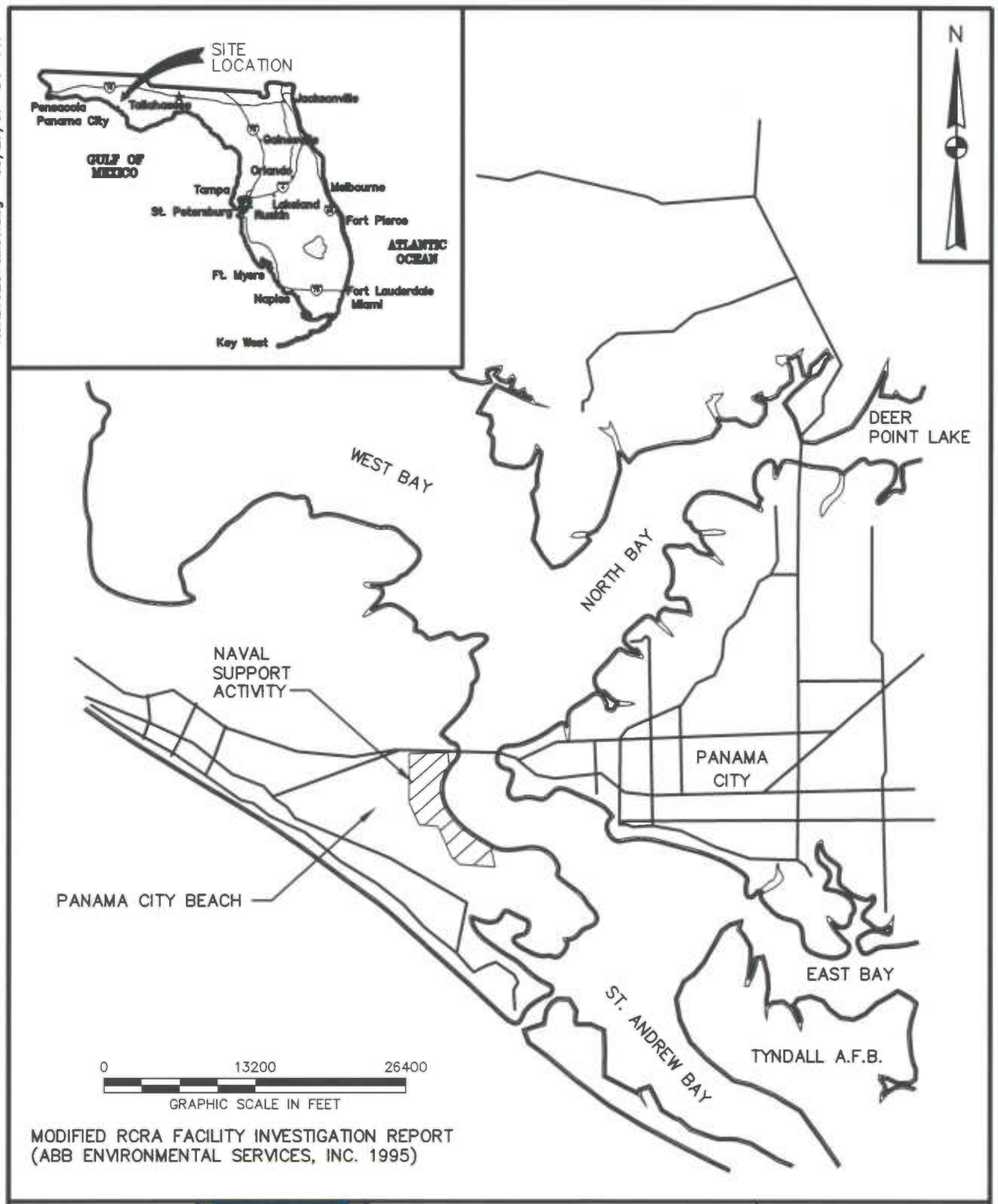

MODIFIED RCRA FACILITY INVESTIGATION REPORT
(ABB ENVIRONMENTAL SERVICES, INC. 1995)

DRAWN BY MF	DATE 1/2/07	VICINITY MAP AREA OF CONCERN 2 REMEDIAL ACTION PLAN NAVAL SUPPORT ACTIVITY PANAMA CITY BEACH, FLORIDA	CONTRACT NO. 9207
CHECKED BY	DATE		OWNER NO.
REVISED BY	DATE		APPROVED BY / DATE
SCALE AS NOTED		NAVFAC	DRAWING NO. FIGURE 1-1 / REV. 0

FORM CADD NO. SDIV-AV.DWG - REV 1 - 9/10/98

ACAD: 9207CM32.dwg 06/12/07 MF PIT

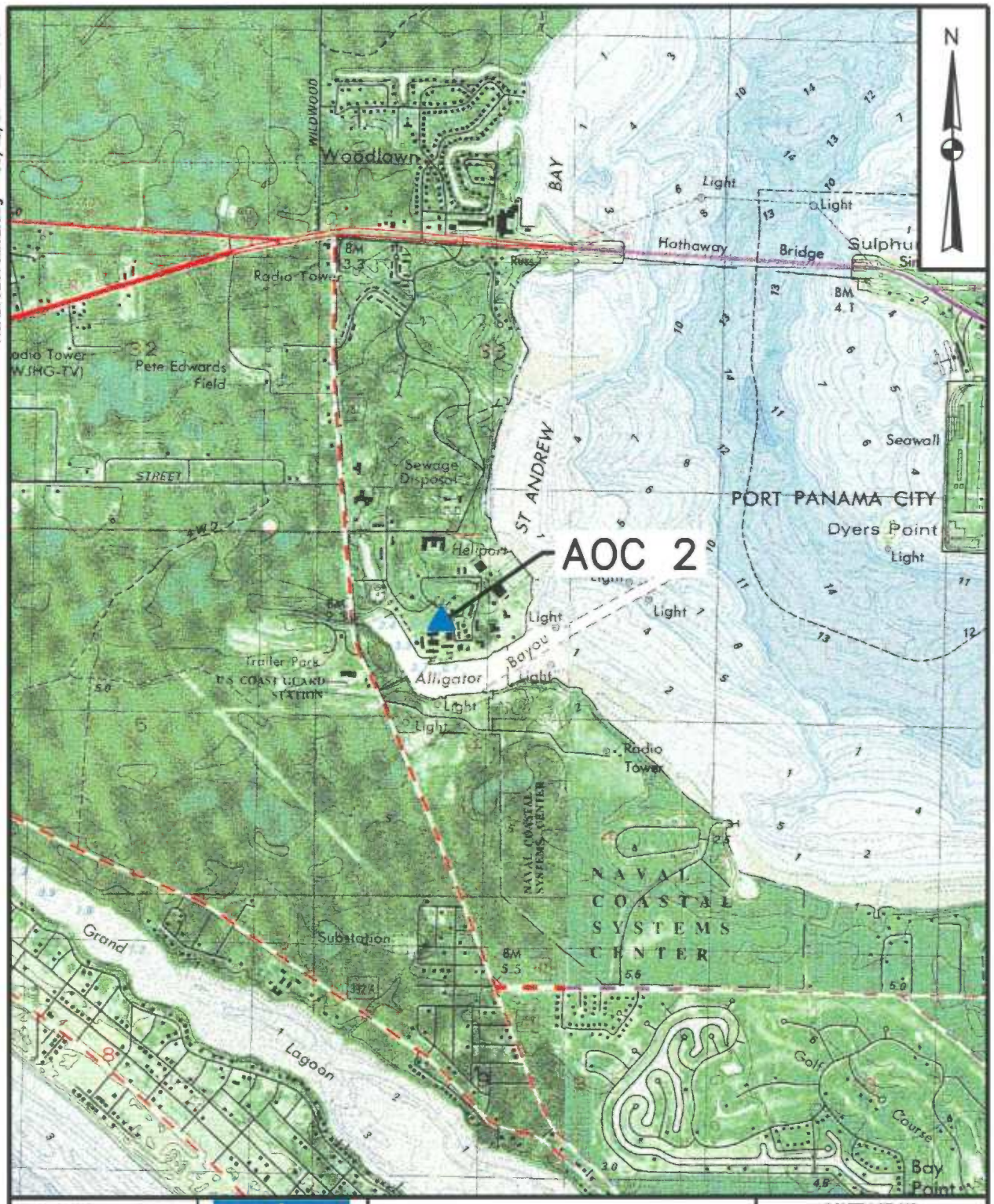

DRAWN BY	DATE
MF	1/2/07
CHECKED BY	DATE
REVISED BY	DATE
SCALE	
NOT TO SCALE	

NAVFAC

AREA MAP
AREA OF CONCERN 2
REMEDIAL ACTION PLAN
NAVAL SUPPORT ACTIVITY
PANAMA CITY BEACH, FLORIDA

CONTRACT NO.	
9207	
OWNER NO.	
APPROVED BY	DATE
DRAWING NO.	REV.
FIGURE 1-2	0

FORM CADD NO. SDIV-AV.DWG - REV 1 - 9/10/98

ACAD: 9207CM33.dwg 03/03/07 MF PIT

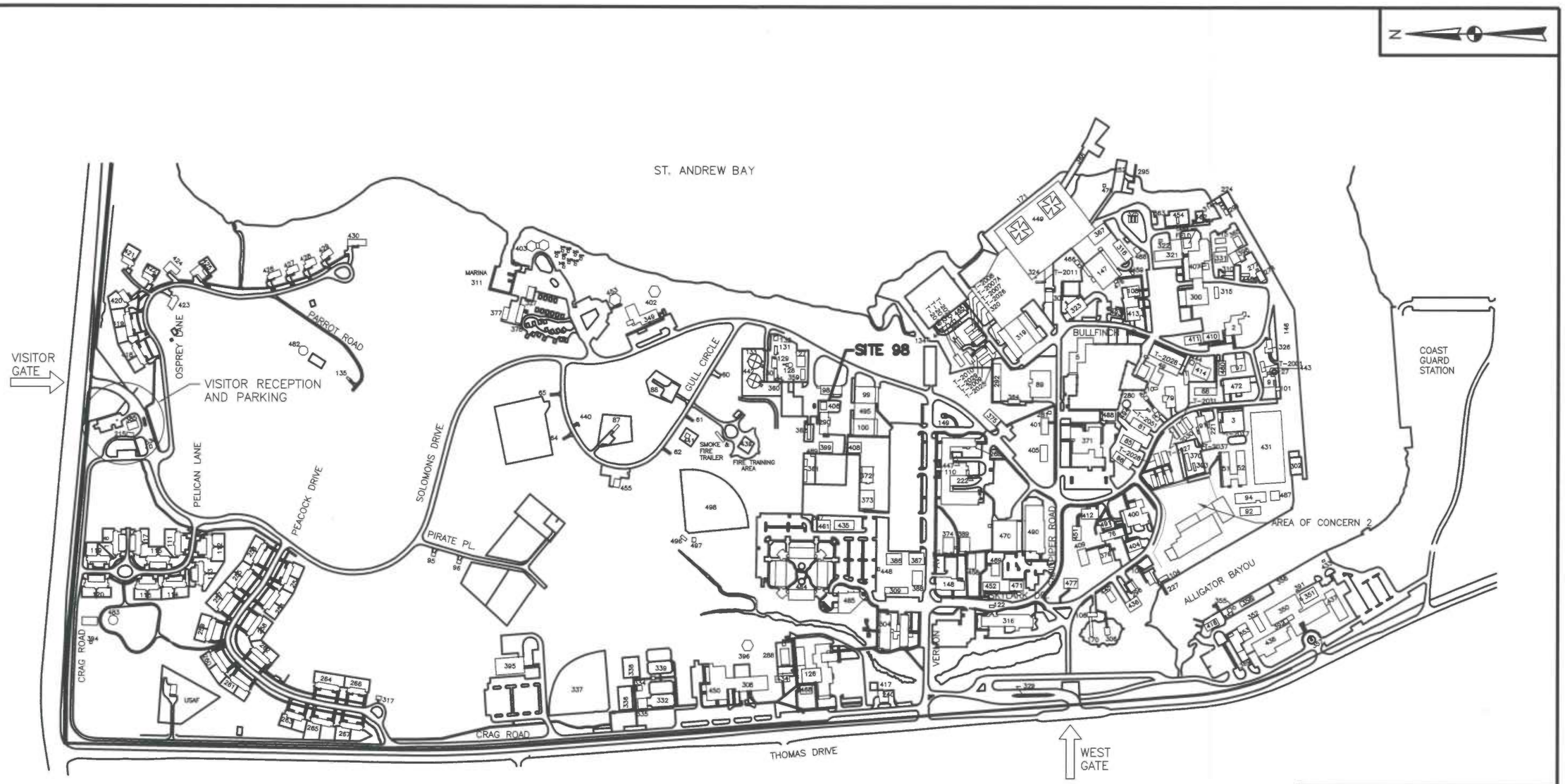

0 500 1000
GRAPHIC SCALE IN FEET

MODIFIED RCRA FACILITY INVESTIGATION REPORT

DRAWN BY MF	DATE 1/2/07	SITE BASE MAP AREA OF CONCERN 2 NAVAL SUPPORT ACTIVITY PANAMA CITY, FLORIDA	CONTRACT NO. 9207
CHECKED BY	DATE		OWNER NO.
REVISED BY	DATE		APPROVED BY / DATE
SCALE AS NOTED		NAVFAC	DRAWING NO. FIGURE 1-3 / REV. 0

FORM CADD NO. SDIV-BH.DWG - REV 1 - 9/10/98

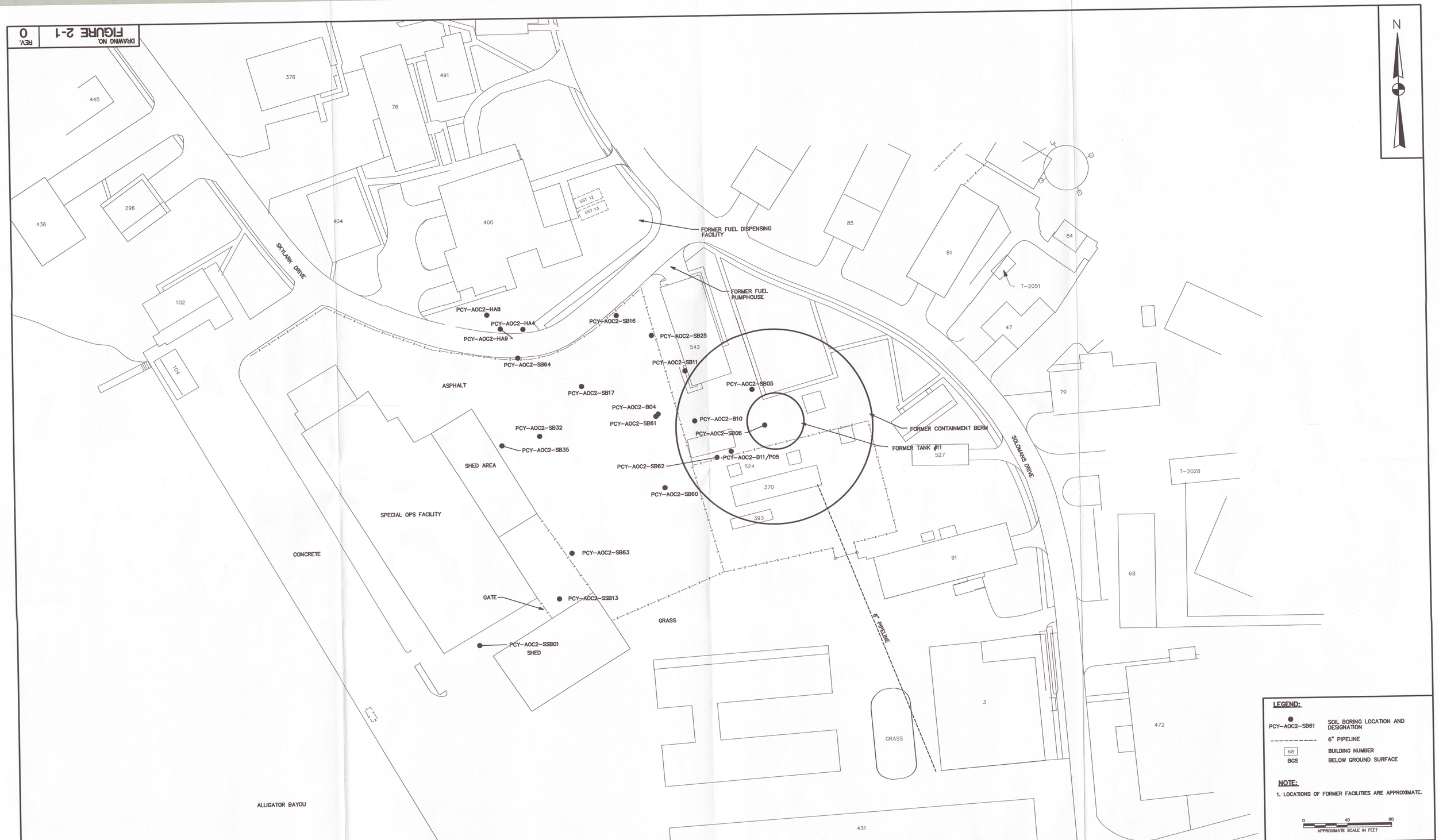

LEGEND:

● PCY-AOC2-SB61	SOIL BORING LOCATION AND DESIGNATION
----------	6" PIPELINE
68	BUILDING NUMBER
BGS	BELOW GROUND SURFACE

NOTE:

1. LOCATIONS OF FORMER FACILITIES ARE APPROXIMATE.

0 40 80
APPROXIMATE SCALE IN FEET

DRAWN BY MF	DATE 1/2/07	
CHECKED BY	DATE	
REVISED BY	DATE	
SCALE AS NOTED		

NAVFAC

SOIL BORING LOCATION MAP
AREA OF CONCERN 2
REMEDIAL ACTION PLAN
NAVAL SUPPORT ACTIVITY
PANAMA CITY BEACH, FLORIDA

CONTRACT NO. 9207	
OWNER NO.	
APPROVED BY	DATE
DRAWING NO. FIGURE 2-1	REV. 0

ACAD: 9207CM35.dwg 03/28/07 MF PIT

DRAWING NO. FIGURE 2-1 REV. 0

DRAWING NO. FIGURE 2-2 REV. 0

DRAWN BY MF	DATE 1/2/07	
CHECKED BY	DATE	
REVISED BY	DATE	
SCALE AS NOTED		

NAVFAC

MONITORING WELL LOCATION MAP
AREA OF CONCERN 2
REMEDIAL ACTION PLAN
NAVAL SUPPORT ACTIVITY
PANAMA CITY BEACH, FLORIDA

CONTRACT NO. 9207
OWNER NO.
APPROVED BY DATE
DRAWING NO. FIGURE 2-2 REV. 0

FORM CADD NO. SHIV-D-STADVG - REV 1 - 9/14/98

ACAD: 9207CM34.dwg 03/28/07 MF PIT

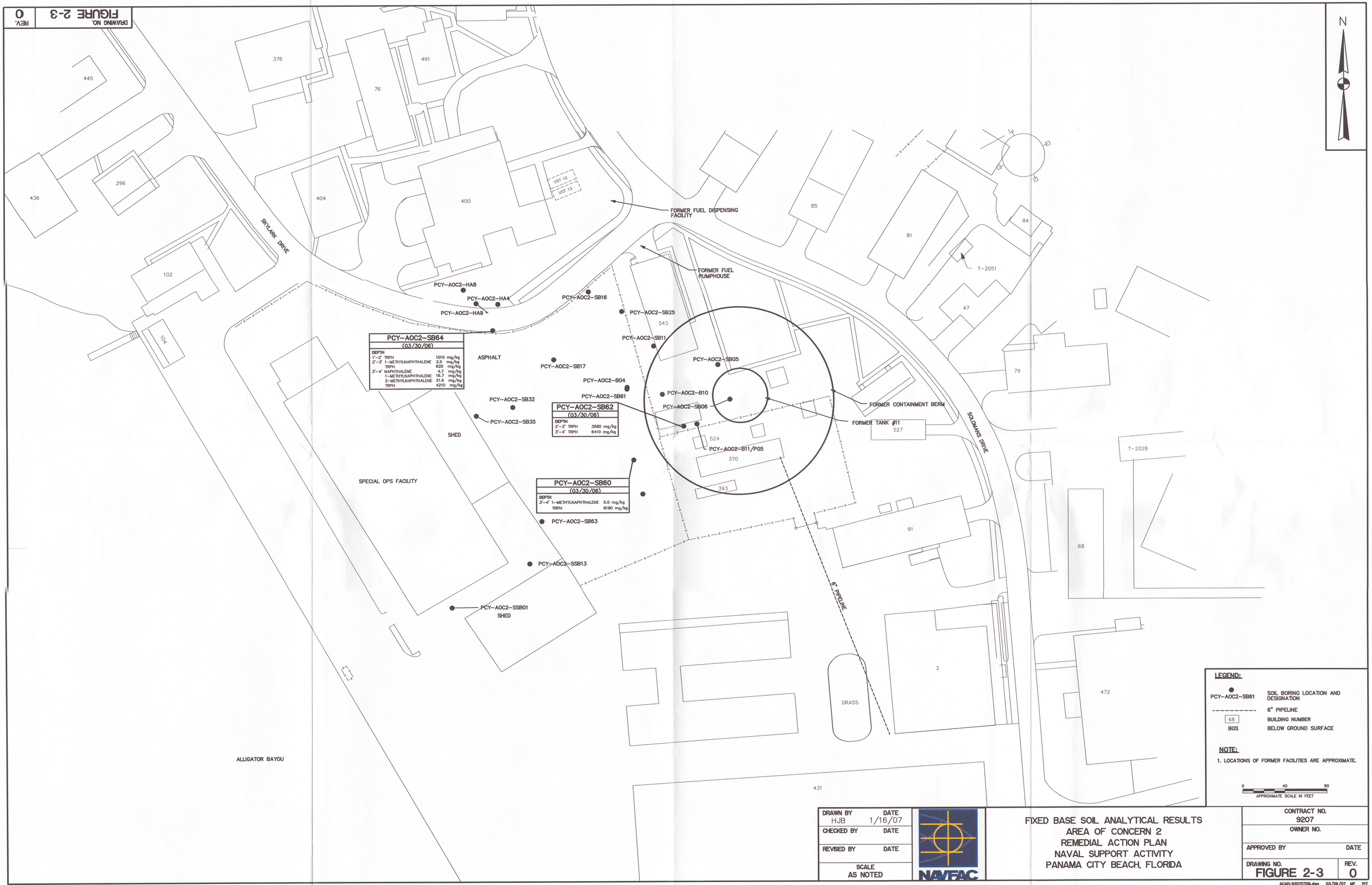

DRAWN BY	DATE
HJB	1/16/07
CHECKED BY	DATE
REVISED BY	DATE
SCALE AS NOTED	

NAVFAC

FIXED BASE SOIL ANALYTICAL RESULTS
AREA OF CONCERN 2
REMEDIAL ACTION PLAN
NAVAL SUPPORT ACTIVITY
PANAMA CITY BEACH, FLORIDA

CONTRACT NO. 9207	
OWNER NO.	
APPROVED BY	DATE
DRAWING NO. FIGURE 2-3	REV. 0

ACAD: 9207CT09.dwg 03/28/07 MF PIT

FORM CADD NO. SSIV-D-STD3VG - REV 1 - 9/14/98

DRAWING NO. FIGURE 2-3 REV. 0

DRAWING NO. FIGURE 2-4 REV. 0

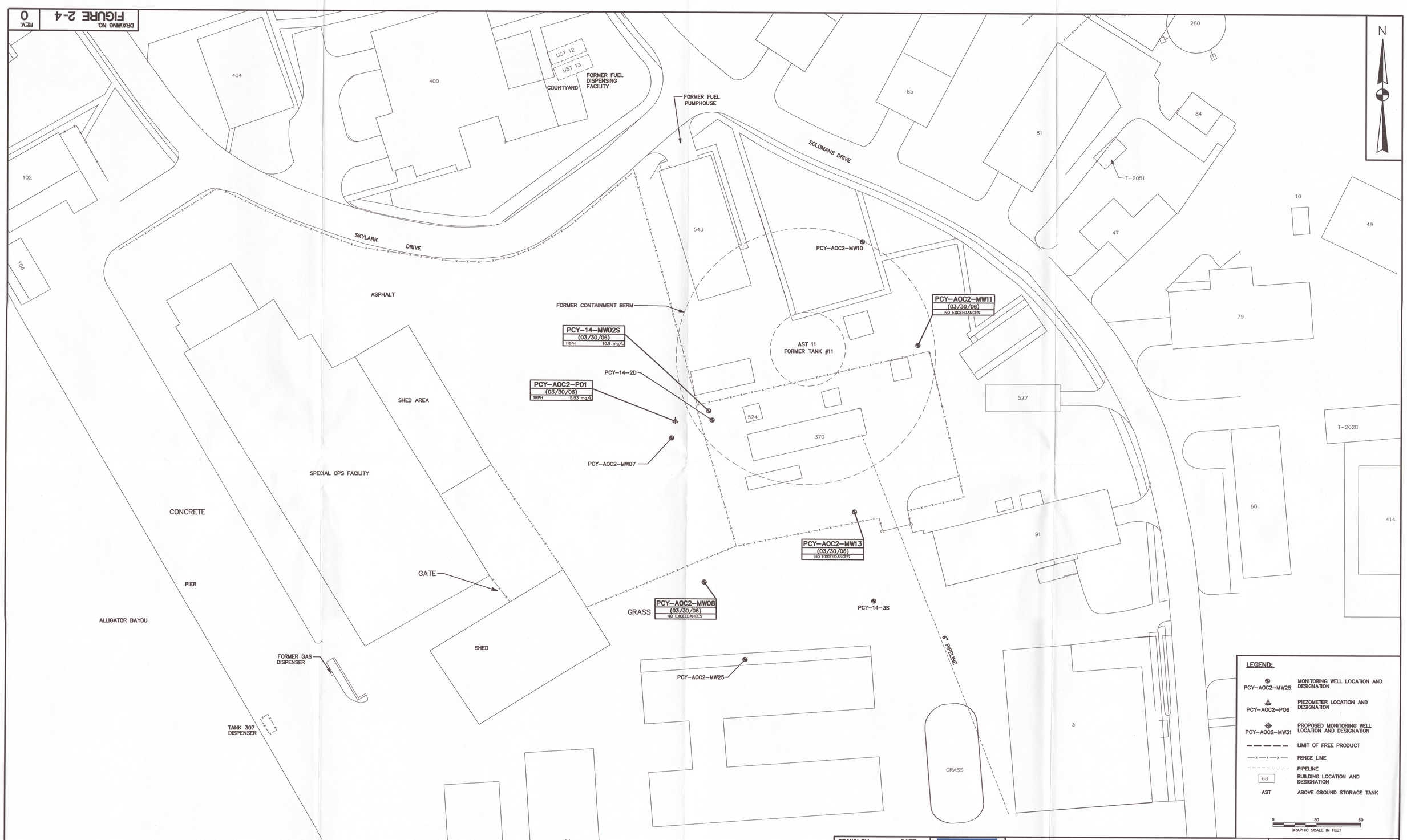

DRAWN BY HJB	DATE 1/16/07	
CHECKED BY	DATE	
REVISED BY	DATE	
SCALE AS NOTED		

NAVFAC

FIXED BASE GROUNDWATER ANALYTICAL RESULTS
AREA OF CONCERN 2
REMEDIAL ACTION PLAN
NAVAL SUPPORT ACTIVITY
PANAMA CITY BEACH, FLORIDA

CONTRACT NO. 9207	
OWNER NO.	
APPROVED BY	DATE
DRAWING NO. FIGURE 2-4	REV. 0

FORM CADD NO. SERV-D-STD.DWG - REV 1 - 9/14/98

ACAD: 9207CT08.dwg 03/28/07 MF PIT

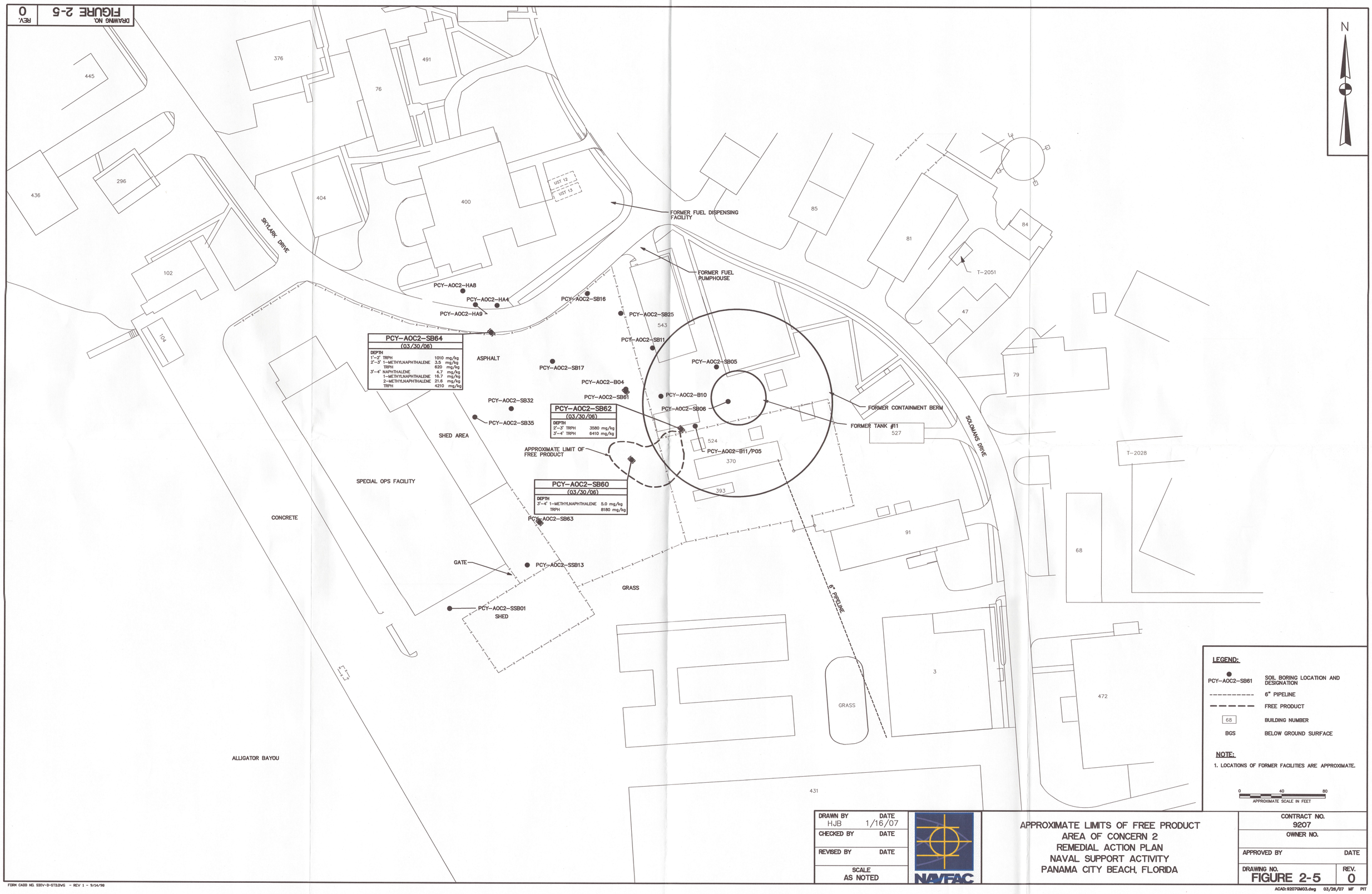

DRAWN BY	DATE
HJB	1/16/07
CHECKED BY	DATE
REVISED BY	DATE
SCALE AS NOTED	

NAVFAC

APPROXIMATE LIMITS OF FREE PRODUCT
AREA OF CONCERN 2
REMEDIAL ACTION PLAN
NAVAL SUPPORT ACTIVITY
PANAMA CITY BEACH, FLORIDA

CONTRACT NO. 9207	
OWNER NO.	
APPROVED BY	DATE
DRAWING NO. FIGURE 2-5	REV. 0

ACAD: 9207GM03.dwg 03/28/07 MF PIT

FIRM CADD NO. 32EV-D-STD.DWG - REV 1 - 9/14/98

DRAWING NO. FIGURE 2-5 REV. 0

LEGEND:

● PCY-AOC2-SB61	SOIL BORING LOCATION AND DESIGNATION
----------	6" PIPELINE
— — — —	FREE PRODUCT
68	BUILDING NUMBER
BGS	BELOW GROUND SURFACE

NOTE:

1. LOCATIONS OF FORMER FACILITIES ARE APPROXIMATE.

0 40 80
APPROXIMATE SCALE IN FEET

DRAWN BY MF	DATE 3/3/07	APPROXIMATE AREA OF EXCAVATION AREA OF CONCERN 2 REMEDIAL ACTION PLAN NAVAL SUPPORT ACTIVITY PANAMA CITY BEACH, FLORIDA
CHECKED BY	DATE	
REVISED BY	DATE	
SCALE AS NOTED		

NAVFAC

CONTRACT NO. 9207
OWNER NO.
APPROVED BY DATE
DRAWING NO. FIGURE 6-1
REV. 0

ACAD: 92070M05.dwg 03/26/07 MF PIT

FORM CASD NEL S3IV-B-STD.DWG - REV 1 - 9/14/98

DRAWING NO. FIGURE 6-1
REV. 0

ACAD: 9207PF01.dwg 08/12/07 MF PIT

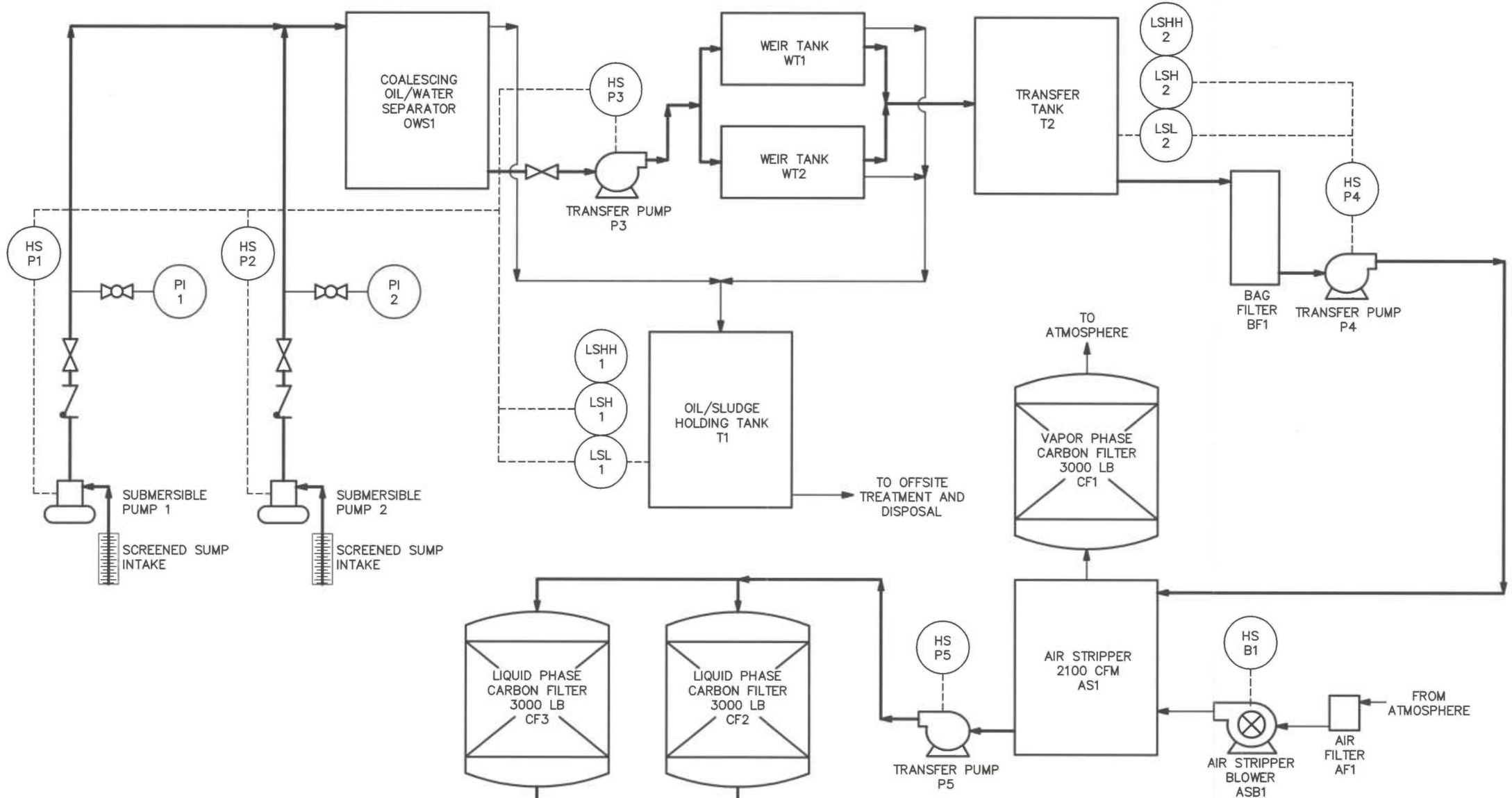

DRAWN BY MF	DATE 2/14/07	PIPING AND INSTRUMENT DIAGRAM AREA OF CONCERN 2 REMEDIAL ACTION PLAN NAVAL SUPPORT ACTIVITY PANAMA CITY BEACH, FLORIDA	CONTRACT NO. 9207
CHECKED BY	DATE		OWNER NO.
REVISED BY	DATE		APPROVED BY / DATE
SCALE NOT TO SCALE		NAVFAC	DRAWING NO. FIGURE 6-2 / REV. 0

FORM CADD NO. SDIV-BH.DWG – REV 1 – 9/10/98

ACAD: 9207CD09.dwg 03/03/07 MF PIT

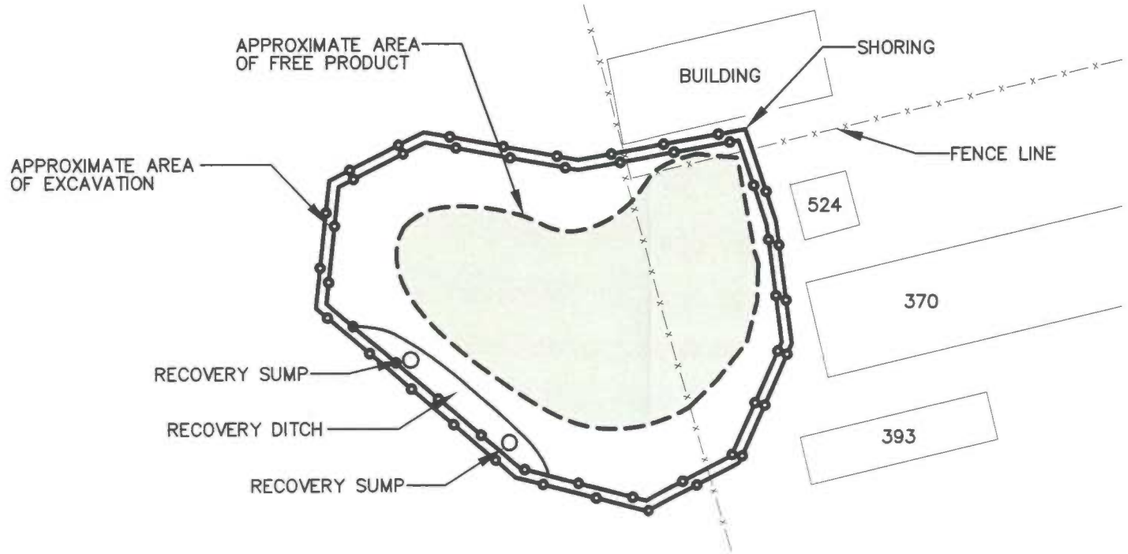

RECOVERY DITCH AND SUMP PLAN
SCALE: 1" = 30'-0"

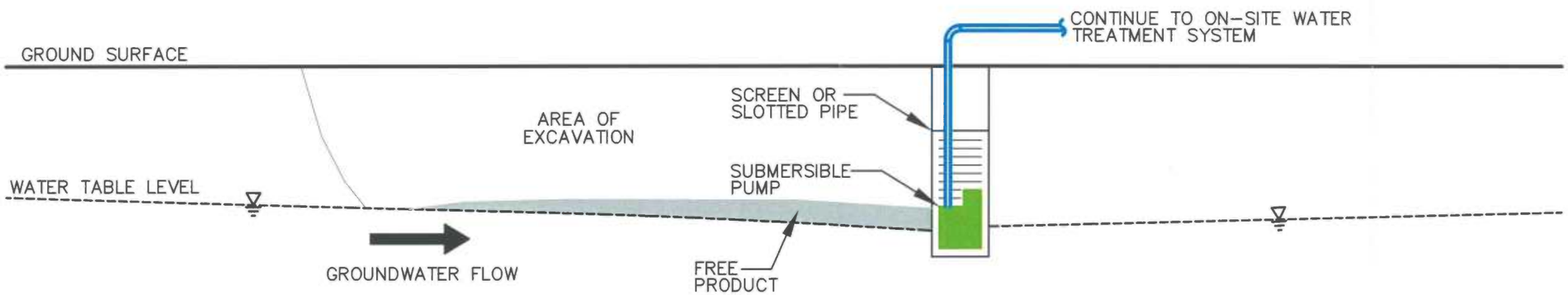

INTERCEPTOR TRENCH PROFILE
NOT TO SCALE

DRAWN BY MF	DATE 3/1/07	DEWATERING SYSTEM TRENCH DETAILS AREA OF CONCERN 2 REMEDIAL ACTION PLAN NAVAL SUPPORT ACTIVITY PANAMA CITY, FLORIDA	CONTRACT NO. 9207
CHECKED BY	DATE		OWNER NO.
REVISED BY	DATE		APPROVED BY / DATE
SCALE NOT TO SCALE			DRAWING NO. FIGURE 6-3 / REV. 0

FORM CADD NO. SDIV-BH.DWG – REV 1 – 9/10/98

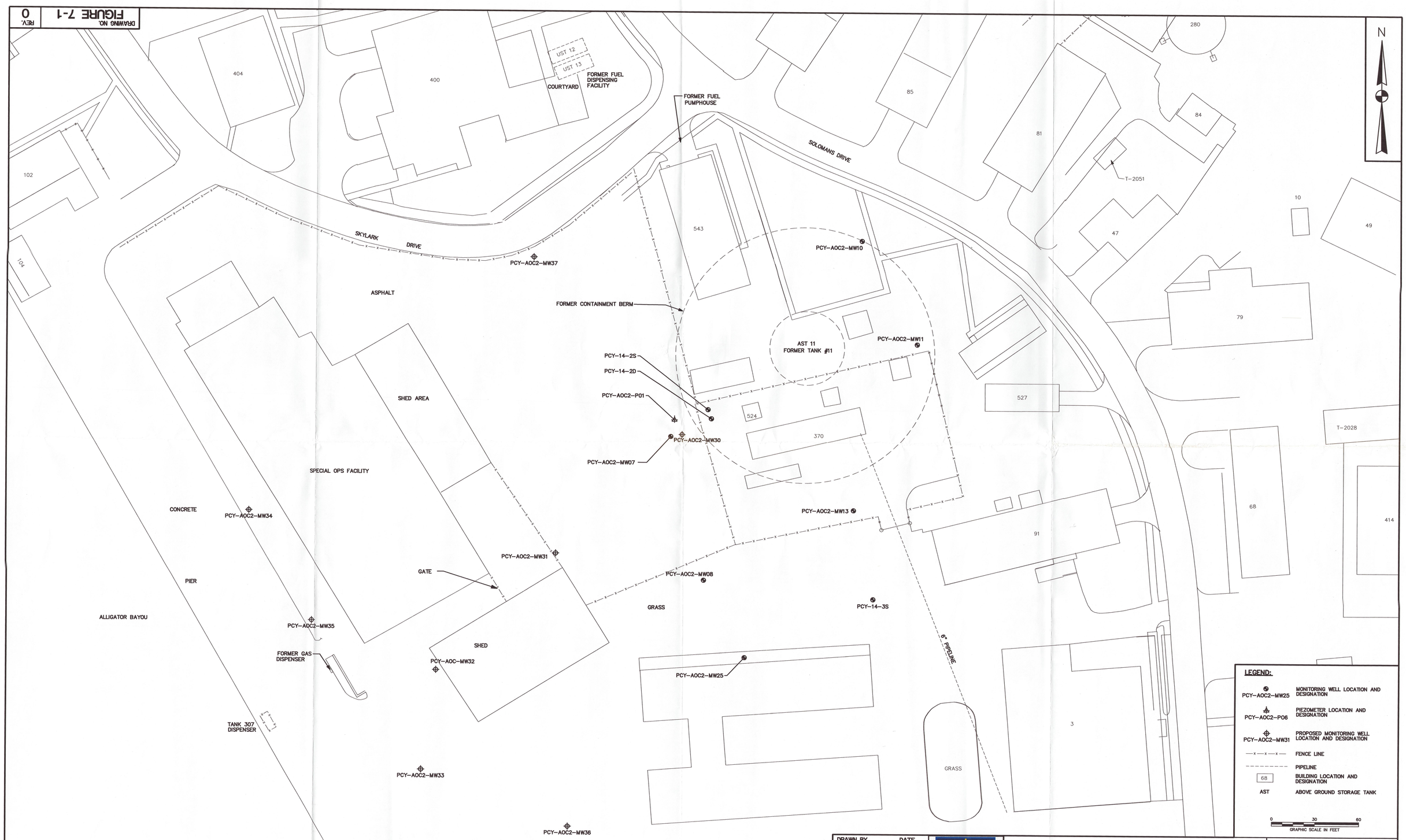

DRAWN BY	DATE
MF	1/2/07
CHECKED BY	DATE
REVISED BY	DATE
SCALE AS NOTED	

NAVFAC

POST REMEDIATION MONITORING WELL LOCATIONS
AREA OF CONCERN 2
REMEDIAL ACTION PLAN
NAVAL SUPPORT ACTIVITY
PANAMA CITY BEACH, FLORIDA

CONTRACT NO. 9207
OWNER NO.
APPROVED BY DATE
DRAWING NO. FIGURE 7-1
REV. 0

FIGURE 7-1
DRAWING NO.
REV. 0

FORM CADD NO. SSIV-D-STD.DWG - REV 1 - 9/14/98

ACAD:9207GM04.dwg 03/28/07 MF PIT

APPENDIX A

FREE PRODUCT MASS CALCULATIONS

APPENDIX A

Free Product Mass and Volume Calculations

Alternative Procedure Remdial Action Plan

Area of Concern 2

Free Product Calculations:

Average Free Product Thickness

	May 2003	March 2004
PCY-AOC2- MW07	0.1 feet	0.1 feet
PCY-AOC2- P02	0.4 feet	0.17 feet
PCY-AOC2- P03	0.62 feet	0.36 feet
Average thickness =	0.29 feet	

Total Free Product Mass = A * T * n * Dfp

where:

A = Total area of plume (ft^2) =3,000 ft^2

T = Average observed thickness (ft) = 0.29 ft

n = Porosity = 0.30

Dfp = Density of free product (56.2 lb/ft^3)

3000 area ft^2	0.29 ft depth *	0.3 porosity *	56.2 lb/ft^3 =	14,753 lb
				263 ft^3
				1964 Gallon

Volume of soil removed =	3,000 sf	8 feet deep =	24,000 $feet^3$ =	
			888.9 yds^3	
		12 yd/truck =		74 truckloads

APPENDIX A

Estimated Flowrate of Water to be Removed from the Excavation

Conductivity sides		Conductivity Bottom	
11.5 ft/day		11.5 ft/day	
4 ft deep		3000 ft^2 Area	
250 ft Circumference			
		34,500 ft^3/d	314.2 area of 50' Diameter excavation
11,500 ft^3/d		258,060 gpd	
86,020 gpd		179 gpm	7854 sf of walls
60 gpm			
	Total		
	239 gpm		344080 gpd
	1,720,400 gallons per 5 days		

$Q = (\pi K \blacktriangle h) / 860{,}400 * \ln(R/Rc)$

Flow =	pi	K	$(y1^2 - y2^2)$
	3.14	11.5	25
	ln(	R /	Rc)
		500	2
			y^2
	y1	30	900
	y2	5	25
	$(y1^2 - y2^2)$	25	875
	Q =	245.4 gpm	

APPENDIX B

REMEDIAL ALTERNATIVE COST ESTIMATE

APPENDIX B

Estimated Costs for Alternative Procedure Remedial Action Plan
Area of Concern 2
Naval Support Activity Panama City
Panama City, Florida

Data Release : Year 2007 **Unit Cost Estimate**

Quantity	LineNumber	Description	Crew	Daily Output	Labor Hours	Unit	Material	Labor	Equipment	Mat. O&P	Labor O&P	Equip. O&P	Total O&P	Ext. Mat. O&P	Ext. Labor O&P	Ext. Equip. O&P	Ext. Total O&P
60	312319200020	Dewatering,excavate drainage trench, with backhoe, 2' wide x 2'	B11C	90	0.178	C.Y.	0	3.86	2.64	0	6.43	2.91	9.34	0	385.8	174.6	$ 560.40
25	312319200200	Dewatering, excavate sump pits, by hand, light soil	1 Clab	7.1	1.127	C.Y.	0	21.03	0	0	35.74	0	35.74	0	893.5	0	$ 893.50
30	312319200900	Dewatering, pumping, 8 hr., attended 8 hours per day, 3" centrifugal pump, includes 20 L.F. of suction hose and 100 L.F. of	B10J	1	8	Day	0	198.5	68.53	0	327.99	75.38	403.37	0	9839.7	2261.4	$ 12,101.10
10	312319201900	Dewatering, sump hole construction, pit with gravel collar, corrugated, 12" gravel collar, 18" corr. pipe, 16 ga, includes	B6	50	0.48	L.F.	46.45	9.76	4.77	51.43	16.36	5.24	73.03	514.3	163.6	52.4	$ 730.30
2	444113170100	Wastewater treatment system, fiberglass, 1,500 gallon	B21	1.03	27.18	Ea.	7000	265.9	155.66	7675	449.9	171.33	8296.23	15350	899.8	342.66	$ 16,592.46
2	Unit 1	Filtration and Separation System		0	0	2 wk	0	0	0	0	0	0	0	0	0	0	$ 54,800.00
5500	312323170020	Fill, dumped material, spread, by dozer, excludes compaction	B10B	1000	0.008	L.C.Y.	0	0.2	0.97	0	0.33	1.07	1.4	0	1815	5885	$ 7,700.00
5500	312323235640	Compaction, 4 passes, 6" lifts, riding, sheepsfoot or wobbly	B10G	1300	0.006	E.C.Y.	0	0.15	0.72	0	0.25	0.79	1.04	0	1375	4345	$ 5,720.00
4000	312216100012	Fine grade, small area, to be paved with grader	B11L	400	0.04	S.Y.	0	0.87	1.23	0	1.45	1.36	2.81	0	5800	5440	$ 11,240.00
110	024113175100	Site demolition, remove bituminous driveways, excludes hauling and disposal fees	B38	640	0.038	S.Y.	0	0.76	0.55	0	1.28	0.61	1.89	0	140.8	67.1	$ 207.90
115	312216101020	Loam or topsoil, fine grade for large parking lots, 15,000 S.Y. or	B32C	5000	0.01	S.Y.	0	0.21	0.33	0	0.35	0.37	0.72	0	40.25	42.55	$ 82.80
400	015626500200	Temporary Fencing, chain link, rented up to 12 months, 6' high, 11 ga, to 500'	2 Clab	400	0.04	L.F.	2.82	0.31	0	3.11	0.54	0	3.65	1244	216	0	$ 1,460.00
110	015523500100	Temporary, roads, gravel fill, 8" gravel depth, excl surfacing	B14	615	0.078	S.Y.	7.66	0.65	0.39	8.41	1.1	0.43	9.94	925.1	121	47.3	$ 1,093.40
110	321216130120	Asphaltic concrete pavement, for highways and large paved areas, binder course, 2" thick	B25	6345	0.014	S.Y.	4.97	0.28	0.35	5.5	0.47	0.38	6.35	605	51.7	41.8	$ 698.50
110	321216140400	Paving, asphaltic concrete, parking lots & driveways, base	B25C	25000	0.002	S.F.	0.54	0.04	0.08	0.59	0.07	0.09	0.75	64.9	7.7	9.9	$ 82.50
5500	312316130060	Excavating, trench or continuous footing, common earth, 1/2 C.Y. excavator, 10' deep, excludes sheeting or dewatering	B11M	200	0.08	B.C.Y.	0	1.74	1.4	0	2.9	1.54	4.44	0	15950	8470	$ 24,420.00
	Unit 2	Bio-Sorbing Agent				Bucket	15							160			$ 2,400.00
		System Analytical															
		Treatment System Monitoring, NPDES, Water and Air								Per Event							
5		Daily for First Week (TO18)								$5,700							$28,500
3		Weekly for 3 Weeks (TO18)								$5,700							$17,100
		Groundwater Analyticals															
		Lab Analysis															
1		Baseline (BTEX, PAHs, TRPH)								$3,400							$3,400
3		Quarterly (BTEX, PAHs, TRPH)								$2,000							$6,000
1		Annual (BTEX, PAHs, TRPH)								$3,400							$3,400
		PARM Reporting															
		GW Sampling and report preparation and submit															
1		Baseline (12 wells, 1 report)								$9,500							$9,500
3		Quarterly (15 wells, 3 reports)								$5,000							$15,000
1		Annual (12 wells, 1 report)								$9,500							$9,500
														$ 18,863.30	**$37,699.85**	**$27,179.71**	**$233,182.86**
													Total:		With 25%Contingency		**$291,479**

APPENDIX C

DEWATERING AND EXCAVATION DESIGN SPECIFICATIONS

APPENDIX C

Treatment System Equipment Sizing

Alternative Procedure Remdial Action Plan
Area of Concern 2

Soil Removal and Secondary Oils Removal

Presume Minimum of 2.5 hr retention time for a flow of 239 GPM **35,842** gallon tank

Weir Tanks (clarifiers)

Option #1		Dimension			each tank	total of 2 tanks
2	rectangular	8 *25 * 15		3000 ft^3	22,440 gal	44,880 gal
	or					
Option #2		diameter	depth			
2	round	18	8	2,545 ft^3	19,034 gal	38,069 gal

Coalescing Oil/Water Separator Dimensions: 110L, 52W, 72H

Average Flow 250 GPM
Maximum Flow 300 GPM

Treatment Equipment Sizing

Submersible Pumps

Submersible Pumps: Cast iron, semi-open two vane, non-clog design.
Gould WSD3 Series or Equal

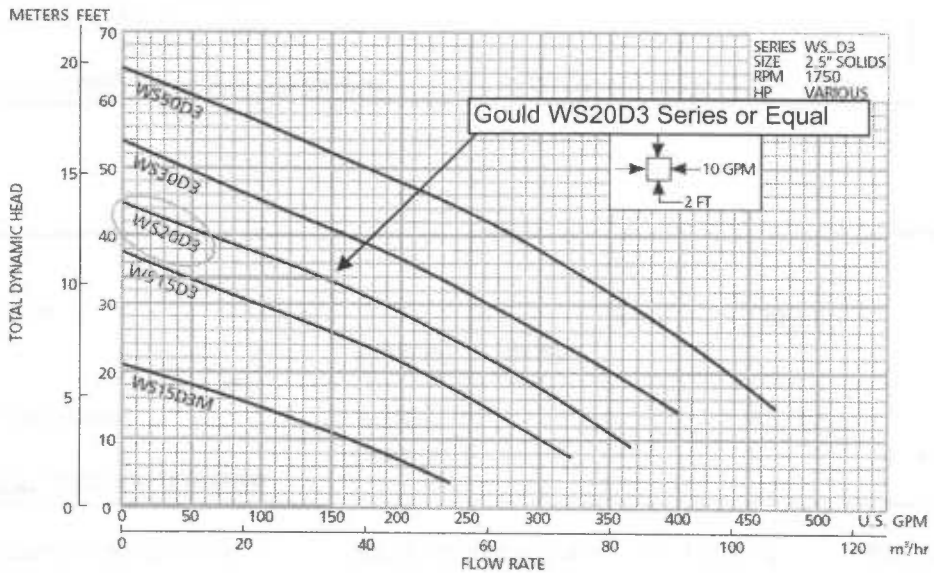

Maximum Loading of 150 GPM - Two Pumps piped in Parallel for an average total capacity of 300 GPM with 30 feet of head loss:
2 hp - single phase, 1700 rpm 7" diameter impeller pump
Gould WS20D3 Series or Equal

Treatment Equipment Sizing

Low Profile Stainless Steel Air Strippers

500 Gallon Sump 120"L x 48"W x 12"H
Water Flow from 20 to- 400 GPM
Air Flow 2100 CFM
Carbonare STAT 400 or Equal

Liquid Phase Granular Activated Carbon Filtration

5' Diameter - 8.5 Feet High
Normal Flow Rate 150 GPM - Piped in Parallel for a total Capacity of 300 GPM
Carbon Capacity of 2500 lb
Carbonare PC28, Westates

Vapor Phase Granular Activated Carbon Filtration

6' Diameter - 7.5 Feet High
Normal Flow Rate 2500 CFM - **Two** Piped in Series and Monitored for Pressure and Breakthrough
Carbon Capacity of 3000 lb
2- US Filter Westates VSC 3000 or Equal

Remediation Time/Excavation Schedule

Preliminary Site Activities:

Bidding	1 week
Permitting	2 months
Baseline Monitoring	1 day
Site Surveying	1 day
Utility :Locations	1 day
Fencing and Signage	1 day
Shoring	2 days
Dewatering Treatment System Setup	4 days

Note: Some preliminary activities will be performed concurrently

Source Removal:

Excavate for sump wells and interceptor trench and set submersible dewatering pumps	1 day
Dewatering and Soil Excavation	20 days
Apply PRP Powder (Bio-Absorbing Agent) @ bottom of excavation	1 day

Site Restoration:

Backfill and compaction	2 days
Surface restoration (sod or seed and mulch, grading and paving)	2 days

Total Time required to complete source removal	**30 days**

ITT

Wastewater

Goulds Pumps

WS_D3 Series Model 3888D3

Submersible Sewage Pump

FEATURES

- **Impeller:** Cast iron, ASTM A48, Class 30, two vane semi-open, non-clog design with pump out vanes for mechanical seal protection. Balanced for smooth operation. Silicon bronze impeller is an option.
- **Casing:** Heavy duty gray cast iron, ASTM A48, Class 30. Volute type casing with 3", 125#, ANSI flanged, horizontal discharge. Compatible with A10-30 cast iron or A10-30B cast iron and brass (non-sparking) guide rail assembly.
- **Dual Mechanical Seals:** Silicon carbide vs. silicon carbide outer seal and ceramic vs. carbon inner seal, stainless steel metal parts, BUNA-N elastomers. Upper and lower shaft seals are positioned independently and are separated by an oil-filled chamber.
- **Shaft:** 300 series stainless steel keyed design.
- **Fasteners:** 300 series stainless steel.
- Capable of running dry temporarily without damage to seals or motor.

GOULDS PUMPS

Goulds Pumps is a brand of ITT Water Technology, Inc.
- a subsidiary of ITT Industries, Inc.

www.goulds.com

Engineered for life

ITT

GOULDS PUMPS
Wastewater

APPLICATIONS

Used in a variety of residential, commercial and industrial applications such as:

- Sewage systems, Flood and Pollution Control, Dewatering/Effluent, Farms, Hospitals, Trailer Courts, Motels

SPECIFICATIONS

Pump:

- Maximum solid size: 2.5"
- Discharge size: 3", 125 # ANSI flange
- Maximum capacity: 470 GPM
- Maximum total head: 65 feet
- 300 Series stainess steel fasteners
- 20' Power cord
- Standard silicon carbide/silicon carbide outer seal

Motor:

- Maximum ambient temperature: 104° F (40° C) continuous duty, 140° F (60° C) intermittent duty
- Rated for continuous duty when fully submerged
- Insulation: Class F
- 60 Hertz
- Single row ball bearings
- 300 Series stainless steel keyed shaft

Single Phase:

- 1.5 - 5 HP; 208 and 230 volts
- Built-in thermal overloads with automatic reset
- Built-in capacitors

Three Phase:

- 1.5 - 5 HP; 200, 230, 460 and 575 volts
- Class 10 overload protection must be provided in control panel

MOTORS

- Fully submerged in oil-filled chamber. High grade turbine oil surrounds motor for more efficient heat dissipation, permanent lubrication of bearings and mechanical seal for complete protection against outside environment.
- **Class F insulation.**
- **Designed for Continuous Operation:** Pump ratings are within the motor manufacturer's recommended working limits and can be operated continuously without damage when fully submerged.
- **Bearings:** Upper and lower heavy duty ball bearing construction for precision positioning of parts and to carry thrust loads.
- **Power Cable:** Severe duty rated, oil and water resistant. Epoxy seal on motor end provides secondary moisture barrier in case of outer jacket damage and to prevent oil wicking. 20 foot standard with optional lengths available.
- **O-ring:** Assures positive sealing against contaminants and oil leakage.

AGENCY LISTINGS

Tested to UL 778 and CSA 22.2 108 Standards
By Canadian Standards Association File #LR38549
Goulds Pumps is ISO 9001 Registered.

MODEL AND MOTOR INFORMATION

Order No.	HP	Phase	Volts	RPM	Impeller Dia. (in.)	Maximum Amps	L.R. Amps	KVA Code	Power Cable	F.L. Motor Efficiency %	Resistance Start	Resistance Line-Line	Wt. (lbs.)
WS1518D3M	1.5	1	208	1750	5.25	15.0	50.8	B	14/3	80	1.1	0.9	192
WS1512D3M			230			12.5	29.5	E		70	1.4	1.8	
WS1538D3M		3	200			11.5	40.9	H	14/4	81	NA	1.7	190
WS1532D3M			230			10.0	40.0	F		83		2.3	
WS1534D3M			460			5.0	20.0	F		83		9.3	
WS1537D3M			575			4.0	14.4	H		74		14.8	
WS1518D3	1.5	1	208	1750	6.50	15.0	50.8	B	14/3	80	1.1	0.9	192
WS1512D3			230			12.5	29.5	E		70	1.4	1.8	
WS1538D3		3	200			11.5	40.9	H	14/4	81	NA	1.7	190
WS1532D3			230			10.0	40.0	F		83		2.3	
WS1534D3			460			5.0	20.0	F		83		9.3	
WS1537D3			575			4.0	14.4	H		74		14.8	
WS2018D3	2	1	208	1750	7.00	19.0	50.8	B	14/3	80	1.1	0.9	196
WS2012D3			230			16.0	36.9	D		75	1.4	1.5	
WS2038D3		3	200			11.5	40.9	H	14/4	81	NA	1.7	194
WS2032D3			230			10.0	40.0	F		83		2.3	
WS2034D3			460			5.0	20.0	F		83		9.3	
WS2037D3			575			4.0	14.4	H		74		14.8	
WS3018D3	3	1	208	1750	7.25	25.5	50.8	B	10/3	80	1.1	0.9	205
WS3012D3			230			21.5	46.4	C		79	1.0	1.0	
WS3038D3		3	200			15.2	53.8	G	10/4	85	NA	1.3	200
WS3032D3			230			12.0	49.5	H	14/4	83		1.9	
WS3034D3			460			6.0	24.8	H		83		7.5	
WS3037D3			575			4.8	17.3	G		78		11.6	
WS5012D3	5	1	230	1750	8.00	26.5	57.7	A	10/3	80	1.0	0.8	210
WS5038D3		3	200			18.8	73.9	F	10/4	84	NA	0.9	205
WS5032D3			230			16.4	63.6	E		85		1.2	
WS5034D3			460			8.2	31.8	E	14/4	85		4.8	
WS5037D3			575			6.8	22.8	E		80		7.4	

MATERIALS OF CONSTRUCTION

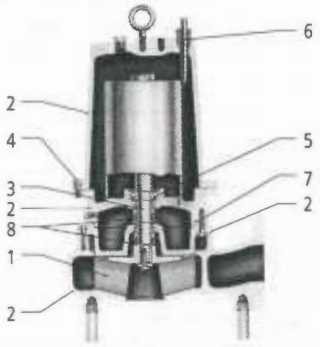

Item No.	Part Name	Material	
		Standard	Optional
1	Impeller, non-clog	1003	1179
2	Castings	1003	
3	Shaft–keyed	300 Series SS	
4	Fasteners	300 Series SS	
5	Ball bearings	Steel	
6	Power cable	STOW, 20 feet	Additional lengths
7	O-ring	BUNA-N	

Item No.	Outer Mech. Seal	Service	Rotary	Stationary	Elastomers	Metal Parts
8	OPT	Heavy duty	Silicon Carbide	Tungsten Carbide	BUNA-N	300 Series SS
	STD	Mild abrasives	Silicon carbide		BUNA-N	300 Series SS

Material Code	Engineering Standard
1003	Cast iron — ASTM A48 Class 30
1179	Silicon bronze — ASTM C87600

PERFORMANCE RATINGS (Gallons Per Minute)

Series No. ▶		WS15D3M	WS15D3	WS20D3	WS30D3	WS50D3
HP ▶		1½	1½	2	3	5
RPM ▶		1750				
Total Head Feet of Water	10	160	300			
	15	90	260	320		
	20		210	280	350	435
	25		160	235	310	400
	30		100	185	265	360
	35			130	210	325
	40			60	160	280
	45				100	230
	50					170
	55					115
	60					60

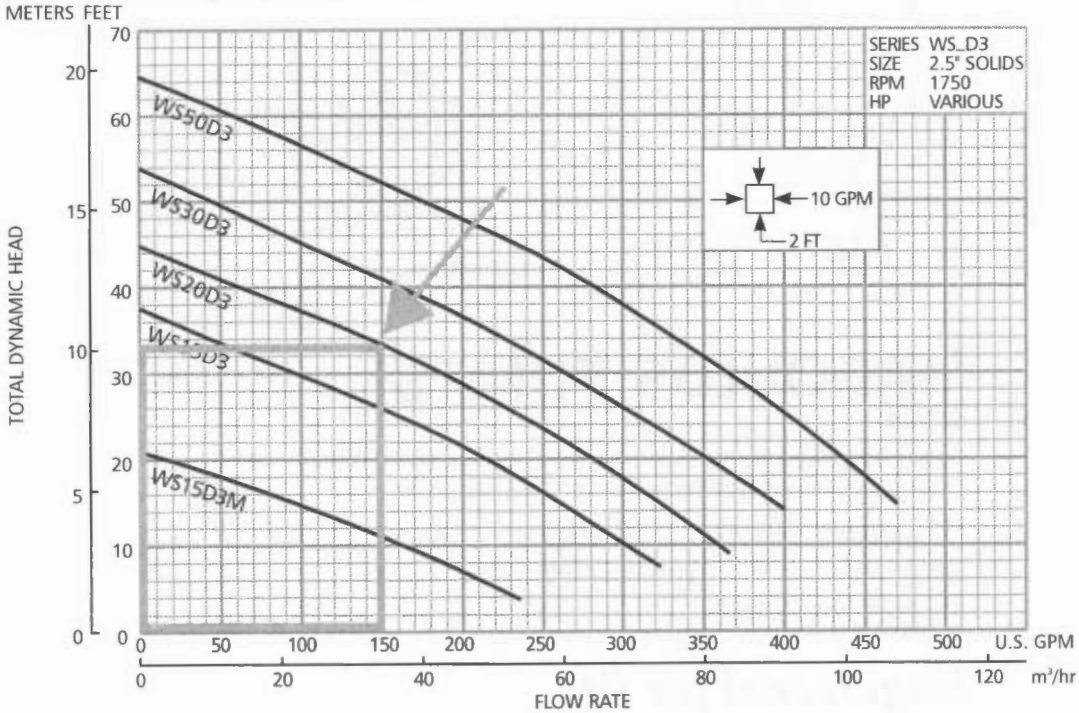

ITT

Wastewater

APPLICATION DATA AND CONSTRUCTION DETAILS

Maximum Solid Size		2.5"
Minimum Casing Thickness		5/16"
Casing Corrosion Allowance		1/8"
Maximum Working Pressure		30 PSI
Maximum Submergence		50 feet
Minimum Submergence		Fully submerged for continuous operation
		6" below top of motor for intermittent operation
Maximum Environmental Temperature		40° C (104° F) continuous operation, 60° C (140° F) intermittent operation
Power Cable – Type (See Motor Information for AWG data/size.)		Type SJTOW: single phase, 1½ and 2 HP
		Type STOW: single phase, 1½ – 3 HP and 5 HP, 460 V
		Type STOW: single phase, 3 and 5 HP, three phase 5 HP, 230 V
Motor Cover, Bearing Housing, Seal Housing, Casing		Gray Cast Iron – ASTM A48, Class 30
Impeller – Standard, Optional		Gray Cast Iron – ASTM A48 or Cast Bronze – ASTM B584 C87600
Motor Shaft		AISI 300 Series Stainless Steel
Motor Design		NEMA 56 Frame, oil filled with Class F Insulation
Motor Overload Protection		Single phase: on winding thermal overload protection auto reset
		Three phase: requires Class 10 overloads in control panel
External Hardware		300 Series Stainless Steel
Impeller Type		Semi-open with pump out vanes on back shroud
Oil Capacity – Seal Chamber		1.5 quarts
Oil Capacity – Motor Chamber		1½-5 HP single and three phase: 7 quarts
Mechanical Seals – Standard	Upper	Carbon/Ceramic; Type 21
	Lower	Silicon Carbide/Silicon Carbide; Type 31
Mechanical Seals – Optional Lower		Silicon Carbide/Tungsten Carbide; Type 31

DIMENSIONS

(All dimensions are in inches. Do not use for construction purposes.)

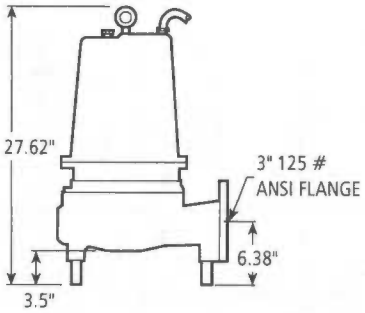

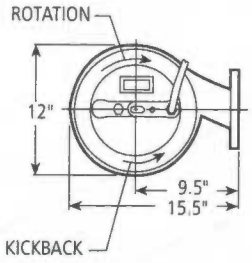

GOULDS PUMPS

Goulds Pumps and the ITT Engineered Blocks Symbol are registered trademarks and tradenames of ITT Industries Inc.

SKF is a registered trademark of Aktiebolaget SKF, Sweden.

SPECIFICATIONS ARE SUBJECT TO CHANGE WITHOUT NOTICE.

B3888D3 March, 2006

© 2006 ITT Water Technology, Inc.

Engineered for life

COWS 250S
250 GPM STEEL
OIL/WATER SEPARATOR

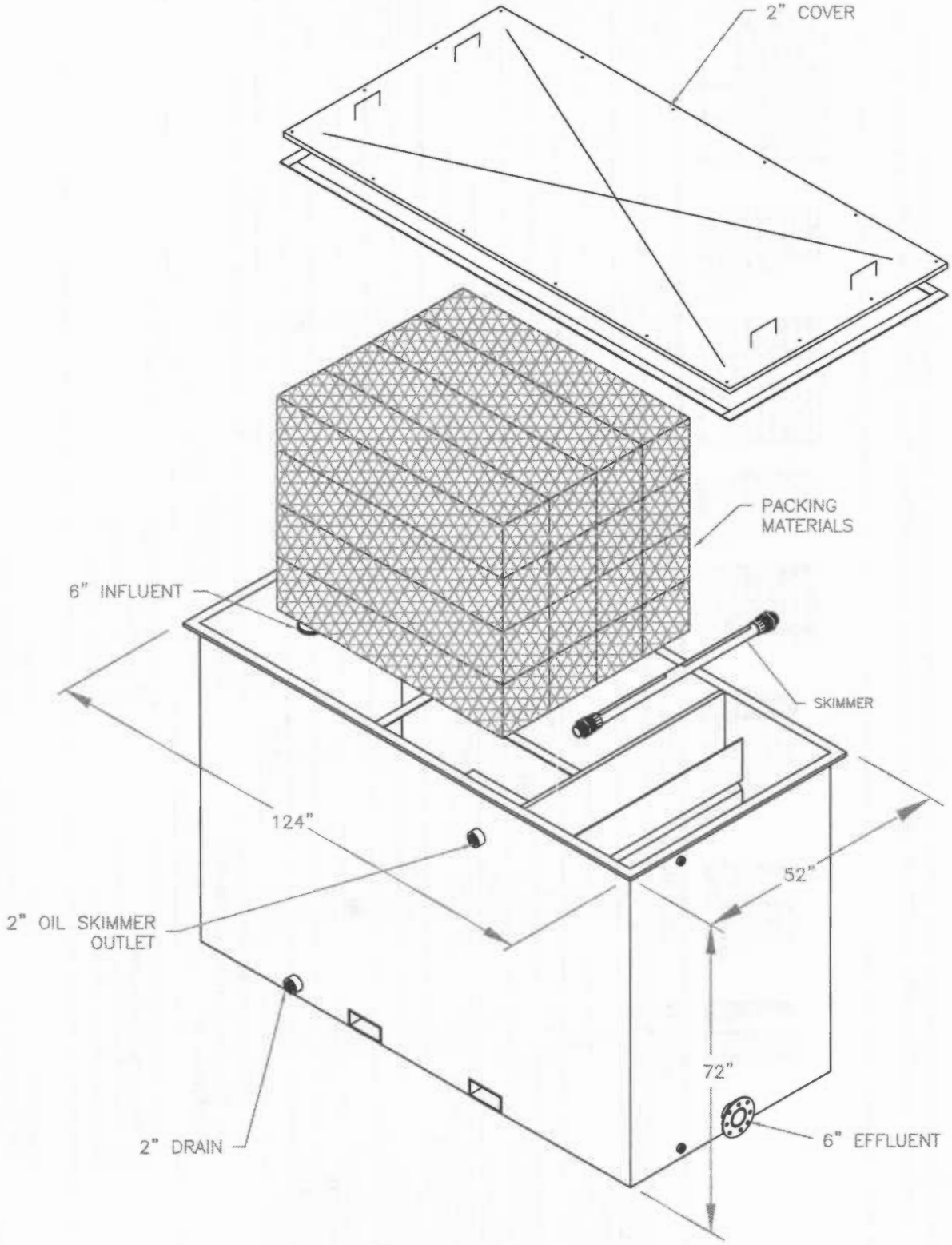

Sales Drawing #214040
4/3/02
© CARBONAIR 2002

CARBONAIR
www.carbonair.com

STAT® Series
Low Profile Air Strippers

Carbonair's exclusive STAT series represents the best choice in low profile air strippers, combining high performance, flexibility, and design simplicity. Carbonair's STAT units are available with a number of tray configurations, blowers and controls, and can achieve a removal efficiency of up to 99.99 % for a long list of volatile organic compounds.

Specifications[1]

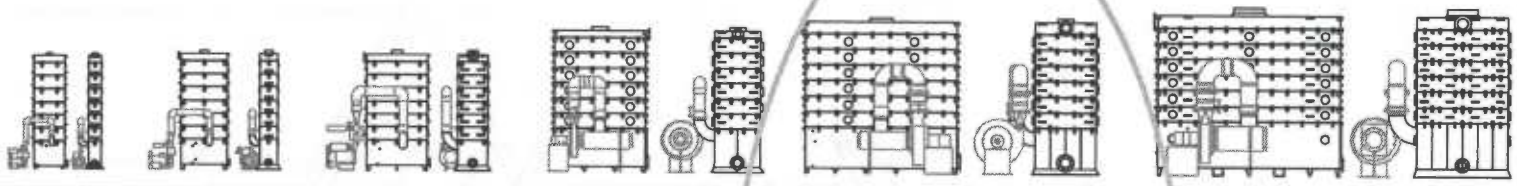

Model	STAT 15	STAT 30	STAT 80	STAT 180	STAT 400	STAT 720
Liquid Flow Range (gpm)	0.5 - 12	1 - 35	5 - 80	10 - 200	20 - 400	40 - 1000
Minimum Airflow (cfm)	60	100	300	650	1800	3000
Maximum Airflow (cfm)	80	150	350	900	2100	4000
Blower HP [2]	1.0, 1.5	2, 3	5, 7.5, 10	10	20, 25	40, 50
Tray Dimensions (LxWxH, in)	24x10x10	36x14x10	48x24x10	72x36x11 5/8	120x48x12	144x72x12
Assembly Height (Approx.) [3]	7'-7 1/4"	7'-9 3/4"	7'-10 1/4"	9'-6"	10'-2 1/4"	10'-11 3/4"
Optional Skid Footprint (LxWxH, in)	47x29x4	64x34x6	66x60x6	88x86x6	138x102x6	--
Empty Tray Weight, Each (lb)	20	40	65	150	350	550
Assembly Weight (lb) [4]	360	560	1000	2040	4110	6820
Assembly Operating Weight (lb) [4]	610	940	2230	5550	11,820	21,850
Sump Holding Capacity (gal)	16	30	60	225	500	1000
Influent Connection (NPS) [5]	1.5" FPT	2"	3"	4"	6"	8"
Effluent Connection (NPS) [5]	2"	3"	3"	6"	8"	10"
Off-Gas Discharge OD	4 3/8"	6 3/8"	8 1/2"	12 19/32"	18"	24"

Design Features

- 304 stainless steel welded construction
- Gasoline-resistant neoprene gaskets
- Anti-bypass valve (no priming required)
- Polypropylene demister (99.5 % removal efficiency 10 microns and larger)
- Direct coupled blowers
- Clean-out ports (STAT 180-720)

Options

- ☐ Pump-down capability with discharge pump
- ☐ Pressure gauges and switches
- ☐ Water/air flow and temperature monitoring
- ☐ Explosion-proof controls and motors
- ☐ Off-gas carbon filtration
- ☐ Sample taps
- ☐ Control panel packages
- ☐ 316 SS construction
- ☐ Skid Mounted

Service Centers

FLORIDA
4710 Dignan Street
Jacksonville, FL 32254
800.241.7833
904.387.4465
904.387.5[illegible] Fax

MINNESOTA
2731 Nevada Ave. No.
New Hope, MN 55427
800.526.4999
763.544.2154
763.544.2151 Fax

TEXAS
4889 Hunter Rd. Bldg 1-C
San Marcos, TX 78666
800.893.5937
512.392.0085
512.392.0066 Fax

VIRGINIA
4328 West Main Street
Salem, VA 24153
800.204.0324
540.380.5913
540.38[illegible]0 Fax

1. Specifications subject to change without notice
2. Blower HP depends on flow requirements. Single phase motors available up to 5 HP
3. 6-tray unit without optional skid
4. Includes approximate blower and ducting weight
5. 150# flange pattern, unless noted. Effluent size is for gravity drain sumps

Dwg # 217355

CARBON ADSORBER- LIQUID PHASE
PC-28

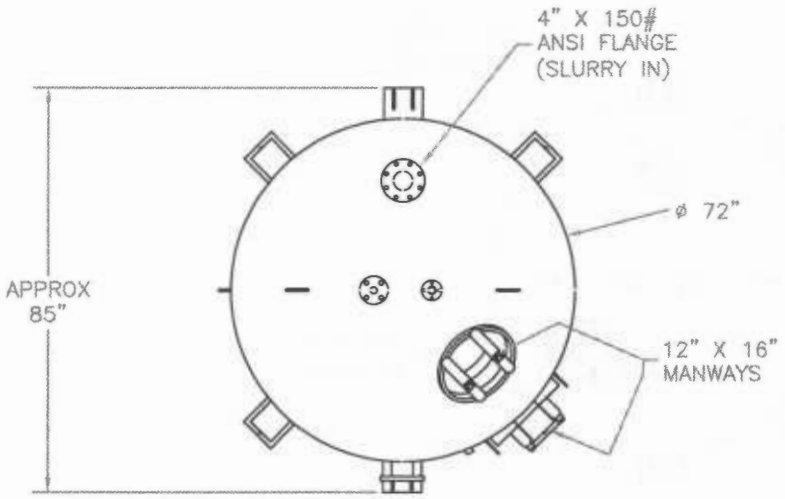

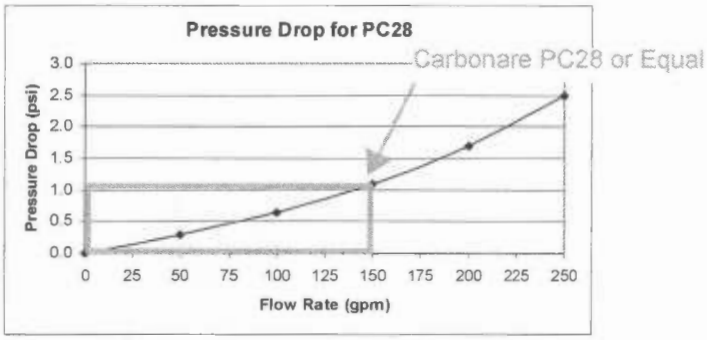

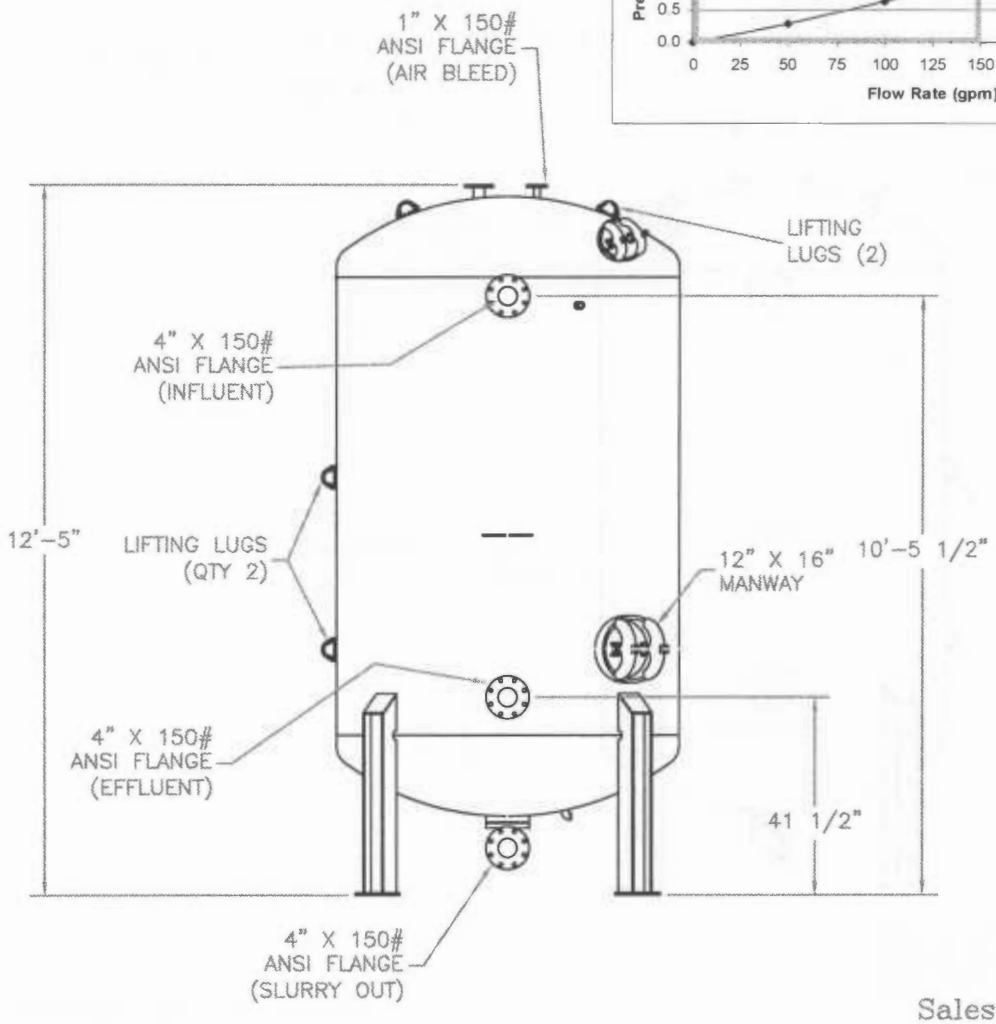

Sales Drawing #118825
03/22/05
©CARBONAIR 2005

CARBON ADSORBER- LIQUID PHASE
PC-28

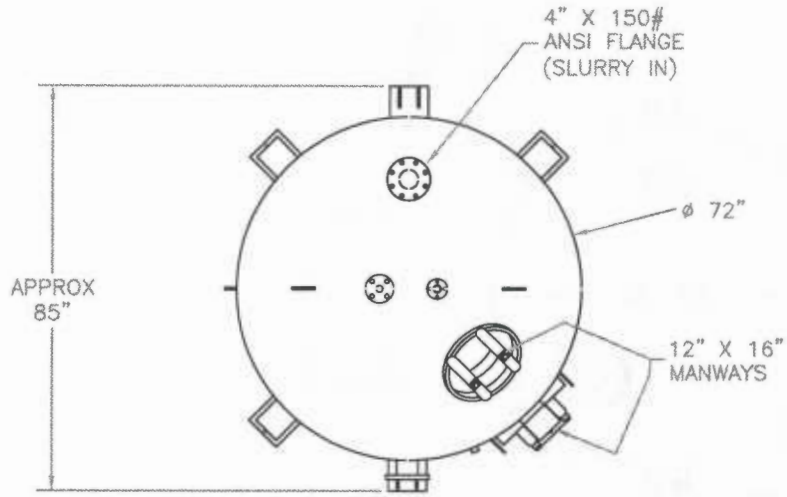

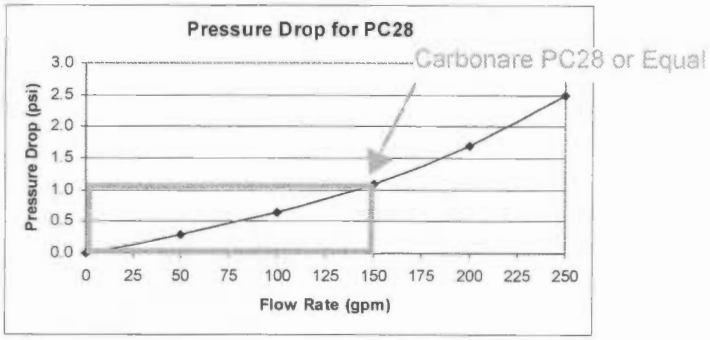

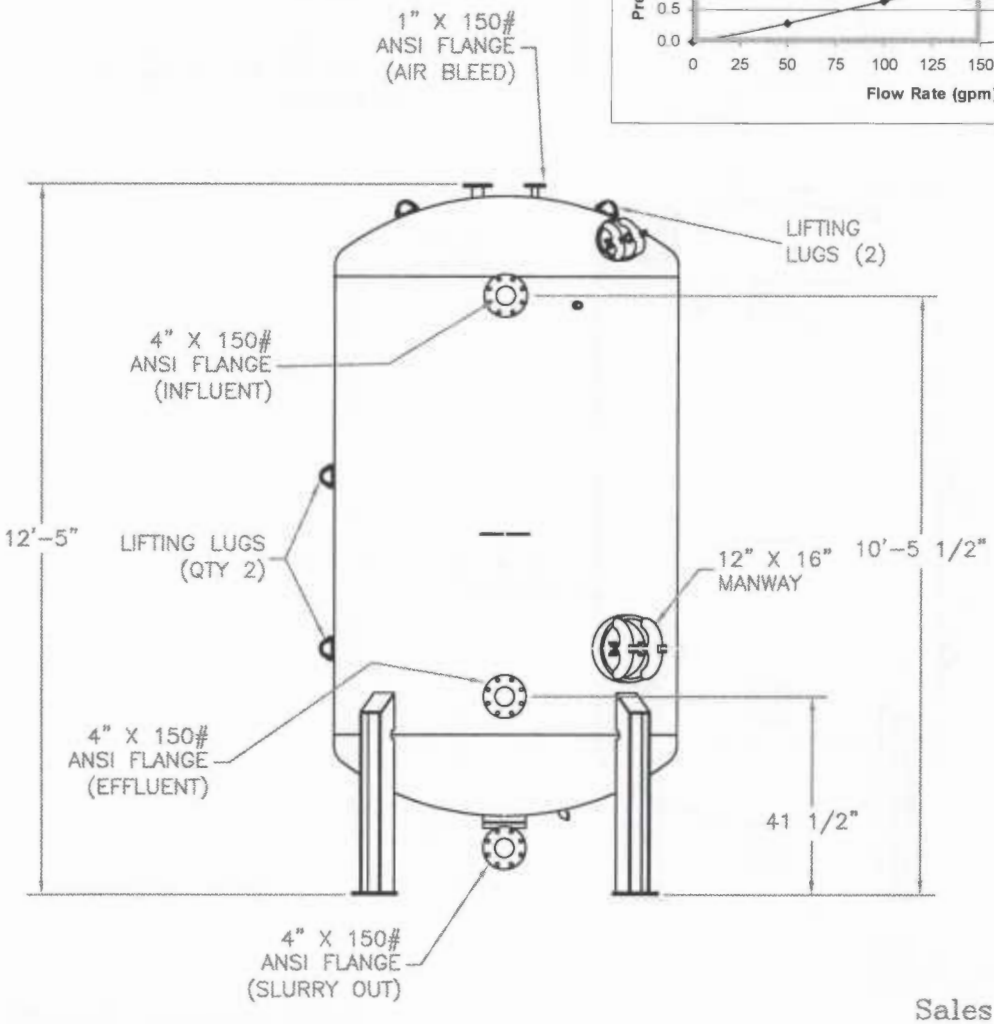

Sales Drawing #118825
03/22/05
©CARBONAIR 2005

Water Technologies

PV® Series High Pressure Liquid Phase Adsorption Systems

PV-5000SYS, PV-10000SYS

SIEMENS

APPLICATIONS

The PV® Series Systems are designed for use in a wide range of low/high flow and pressure applications.

- Groundwater remediation
- Wastewater filtration
- Tank rinse water treatment
- Pilot testing
- Underground storage tank clean up
- Leachate treatment
- Dechlorination
- Spill cleanup
- Hydrotesting

INSTALLATION, STARTUP AND OPERATION

Siemens can provide a total service package that includes utilizing OSHA trained personnel providing on-site carbon changeouts, packaging and transportation of spent carbon for recycling at our RCRA permitted reactivation facilities.

At the time of purchase or rental of the adsorbers, arrangements should be made for the reactivation of the spent carbon. Siemens will provide instructions and assistance on how to obtain acceptance of the spent carbon at our reactivation facilities. Spent carbon cannot be accepted for reactivation until the acceptance process is completed.

BENEFITS & DESIGN FEATURES

- SSPC-SP5, NSF-approved epoxy lining, rust preventative epoxy primer urethane exterior finish.
- Top and side manways permit easy access and inspection of vessels internals and linings.
- Skid-mounted for easy handling and installation.
- Optimized underdrain system for low pressure drop operation.
- Piping manifold allows either adsorber to be used in the lead or lag position.
- Series or parallel operation.
- PV-5000 is shipped complete with face piping assembled and GAC loaded; no on-site assembly is required.
- PV-10000SYS GAC transfer via slurry piping (4" Sch 10 304L SS).

SPECIFICATIONS		
	PV®-5000SYS	PV®-10000SYS
Dimensions (Dia. x Overall Height – Approx.)	72" x 11'4"	96" x 15'5"
Footprint (Length x Width)	16'8" x 8'	22'8" x 10'
Inlet Connection, (Top)	4"	6"
Outlet Connection, (Bottom)	4"	6"
Manway, Top & Lower Side	(2)14" X 18"	14" X 18"/20"
Internal Piping	304L SS	304L SS
Interior Coating (All Units)	Epoxy	Epoxy
Exterior Coating (All Units)	Epoxy/Urethane	Epoxy/Urethane
Vessel Weight (lbs.):		
Shipping (Skid)	16,800 (Two vessels, piping, carbon)	15,500 (Two vessels, piping)
Operating (Approx.)	40,000	85,000
Flow, GPM (Nominal Per Vessel)	250	500
Pressure, PSIG (Maximum)1	75	75
Temperature, °F. (Maximum)	150	150
Pounds Of Carbon (Per Vessel)	5,000	10,000
Contact Time, Minutes (@ Max Flow Per Vessel)	5	5
Backwash Rate, GPM (8 x 30 Mesh @ 55°F)	185	325

1The PV® Series adsorbers are not ASME code stamped. Pressure rating applies to liquid only.
For detailed dimensional information or drawings, contact your local Siemens sales representative.
For information on the HP® Series ASME code stamped adsorbers, contact your local Siemens representative.

Safety Note: Wet activated carbon readily adsorbs atmospheric oxygen. Dangerously low oxygen levels may exist in closed vessels or poorly ventilated storage areas. Workers should follow all applicable state and federal safety guidelines for entering oxygen depleted areas.

All information presented herein is believed reliable and in accordance with accepted engineering practices. Siemens makes no warranties as to completeness of information. Users are responsible for evaluating individual product suitability for specific applications. Siemens assumes no liability whatsoever for any special, indirect or consequential damages arising from the sale, resale or misuse of its products.

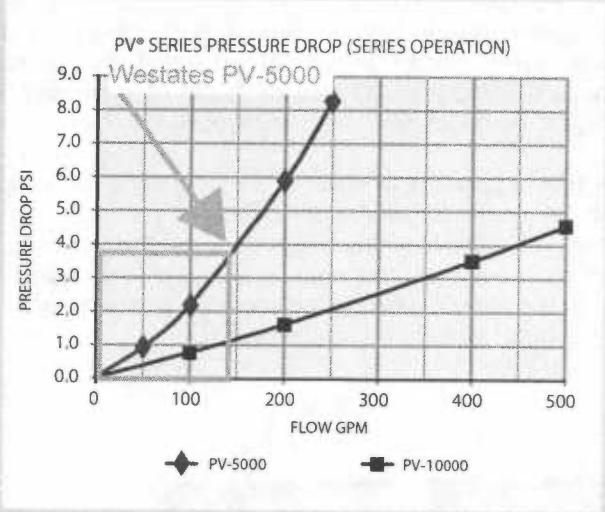

The information provided in this literature contains merely general descriptions or characteristics of performance which in actual case of use do not always apply as described or which may change as a result of further development of the products. An obligation to provide the respective characteristics shall only exist if expressly agreed in the terms of the contract.

PV and HP are trademark of Siemens, its subsidiaries or affiliates.

Siemens
Water Technologies

Environmental Services
2430 Rose Place
Roseville, MN 55113
800.525.0658 phone

information.water@siemens.com
WS-PV1-DS-1206
©2006 Siemens Water Technologies Corp.
Subject to change without prior notice.

USFILTER WESTATES CARBON VSC-SERIES VAPOR PHASE ADSORBERS

Benefits and Design Features

- *Durable, carbon steel construction*
- *Abrasion and corrosion resistant baked epoxy lining; urethane exterior finish (VSC-1000, 2000, 3000, 8000)*
- *Ready-to-use systems: simple installation and operation*
- *Applications to 3000 SCFM*
- *The VSC-1000, 2000, 3000 and 8000 adsorbers have forklift channels for easy handling*
- *The VSC-200, 400, 1000 and 2000 adsorbers are UN/DOT approved transportation containers for RCRA hazardous spent carbon*
- *Hose kit and pipe manifold options are available to simplify installation and operation*

Piping Manifold (Optional)

- *2"/3" sch 80 PVC piping and valves (optional carbon steel and stainless steel piping)*
- *Series or parallel operation.*
- *Sampling ports and pressure gauges*
- *Flexible hoses with Kamlock fittings allow easy installation and removal during service exchange operations (VSC-200, 400, 1000 and 2000).*

Applications

The VSC-Series adsorbers have been proven to be the simplest and most cost effective way to treat malodorous and VOC emission problems. Sturdy steel construction and specially formulated corrosion resistant internal coating ensures long service life and low maintenance. VSC-Series applications include:

- API separator vents
- VOC control from soil vapor extraction (SVE) systems and airstrippers
- Wastewater and product storage tank vents
- Process vents
- Refinery and chemical plant wastewater sewer vents
- Laboratory hood exhausts

Installation, Startup and Operation

USFilter can provide a total service package that includes utilizing OSHA trained personnel providing on-site carbon changeouts, packaging and transportation of spent carbon for recycling at our reactivation facilities, where the contaminants are thermally destroyed.

We provide instructions on sampling the spent carbon and completion of our spent carbon profile form. Spent carbon acceptance testing can be performed at our certified laboratory.

When requested, a certificate of reactivation will be issued.

USFilter

VSC-SERIES
VAPOR PHASE ADSORBERS

SPECIFICATIONS

	VSC-200	VSC-400	VSC-1000/2000	VSC-3000	VSC-8000
Dimensions, diameter x overall height	22" x 34"	30" x 43"	48" x 56"/48" x 8' 0"	60" x 9' 3"	96" x 11' 0"
Inlet Connection	2" FNPT	4" FNPT	4" FNPT	10" Flange	12" Flange
Outlet Connection	2" MPT	4" FNPT	4" FNPT	10" Flange	12" Flange
Manway	Top	Top	18" Top	16" Top	20" Top/Side
Internal Distribution[1]	PVC	PVC	PVC	FRP/PPL	FRP/PPL
Interior Coating	Epoxy	Epoxy	Epoxy	Epoxy	Epoxy
Exterior Coating	Enamel	Enamel	Epoxy/Urethane	Epoxy/Urethane	Epoxy/Urethane
Carbon Fill Volume (cu.ft.)	6.8	14	34/68	107	273
Cross Sectional Area (sq.ft.)	2.8	4.9	12.3	19.6	50.2
Approx. Carbon Weight (lbs)	200	400	1000/2000	3000	8000
Empty Vessel Weight	250	480	890/1190	2500	4500
Flow, CFM (max.)	100	300	500	1500	3750
Pressure, psig (max.)	3	3	14.9	5	5
Temperature, deg. F (max)[4]	140	140	140	140	140
Vacuum, in. Hg (max.)	N/A	N/A	12/12[2]	6[3]	12[3]

[1] Carbon steel and stainless steel internals are also available.
[2] For vacuum greater than 12 in. Hg on VSC-2000, contact your USFilter Westates representative.
[3] For vacuum service on VSC-3000 and VSC-8000, contact your USFilter Westates representative.
[4] For higher temperatures, stainless and carbon steel internals are available.
For detailed dimensional information or drawings, contact your local USFilter Westates sales representative.

VSC-Series Adsorbers Safety Considerations
The adsorption of organic contaminants on activated carbon is an exothermic process, i.e. involves the release of heat.

Certain chemical compounds such as ketones, aldehyes, organic acids and organic sulfur compounds may form reactive species on the carbon surface and under certain conditions may lead to a high temperature rise. If you are unaware or unsure of reactions that may occur, appropriate tests should be performed before installing the VSC.

At high VOC concentrations of organic compounds the heat of adsorption can lead to an increase in carbon bed temperature. The heat can be controlled by a number of techniques such a dilution of the inlet flow, nitrogen blanketing of the carbon system or prewetting of the carbon bed.

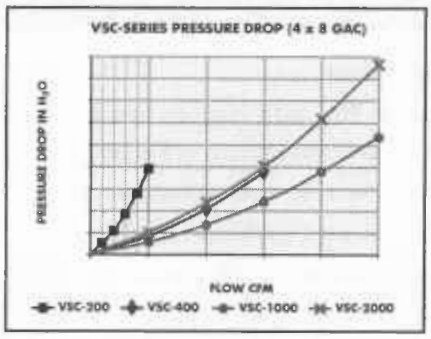

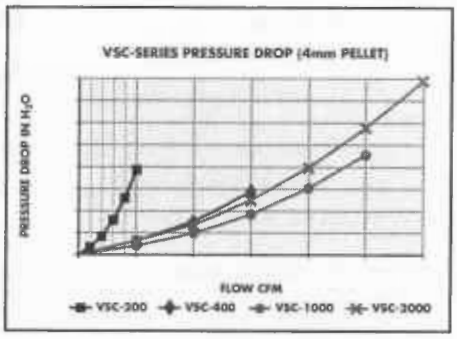

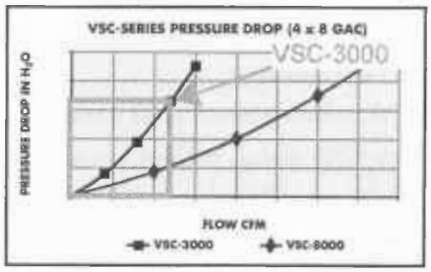

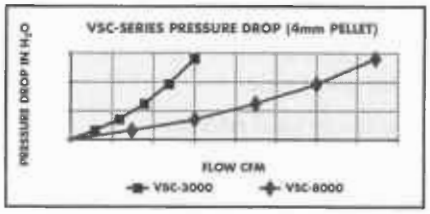

All information presented herein is believed reliable and in accordance with accepted engineering practice. USFilter Westates makes no warranties as to completeness of information. Users are responsible for evaluating individual product suitability for specific applications. USFilter Westates assumes no liability whatsoever for any special, indirect or consequential damages arising from the sale, resale or misuse of its products.

USFilter reserves the right to change the specifications referred to in this literature at any time, without prior notice. Westates Carbon is a trademark of United States Filter Corporation or its affiliates.

USFilter
Westates
Customer and
Technical Service Network:

Gulf Coast Region	800.659.1723
(Louisiana)	225.744.3153
Southwest Region	800.659.1771
Mid-Atlantic Region	800.659.1717
Midwest Region	708.345.7290
Northwest Region	800.659.1718
Southeast Region	225.744.3153
New England Region	800.659.1717

www.usfilter.com

©2004 United States Filter Corporation

UniRemInc

Universal Remediation, Inc.

1405 Parkway View Drive
Pittsburgh PA 15205
Email: **sales@unireminc.com**

Phone:
Fax: 41
Toll Fre

Our Products
Testimonials
Documentation
Case Studies
Photo Gallery

A Leader in Bioremediation & Spill Response

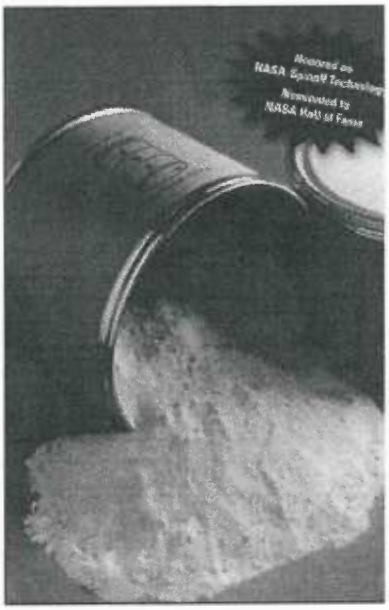

Every year millions of gallons of petroleum and petroleum products are spilled, polluting our environment. Now there is a way to clean up these pollutants safely and naturally using microbiology. UNIREMINC has developed 'PRP' (Petroleum Remediation Product), a completely natural, non-hazardous, non-toxic, and biodegradable form of beeswax. PRP is used as a core component in all UNIREMINC remediation products. It is designated by the U.S. EPA as a Sorbent and consists solely of the materials listed in SS 300.915 (g)(1) of the NCP.

PRP is the result of innovative work by scientists at NASA and has been nominated for the NASA Product Hall of Fame.

NEWS **NASA News:: PRP: The Proven Solution for Cleaning Up Oil Spills**

Nature provides natural microbial remediation. PRP enhances that natural process. It is effective in aiding the bio-degradation of all petroleum hydrocarbons including diesel, motor oil, hydraulic oil, heavy crude, kerosene, etc. PRP is the ultimate remedy for petroleum spills that plague se worldwide waterways.

In independent tests by the National Environmental Technology Corp (NETAC), oil pollutar PRP were reduced by up to 98% in only three weeks. Details are available **upon request**.

Subscribe to our mailing list

Enter your email address to sign up: Subscribe

PRP Powder

Much more than a sorbent, PRP Powder is oleophilic and hydrophobic. It encapsulates hyc forming a physical matrix that floats on water allowing remediation to take place.

Learn more »

BioSok

An easy-to-use "Sok" (approx. 3" x 10") that captures and biodegrades the oil and fuel that boat bilge and that can be accidentally pumped overboard.

Learn more »

BioBoom

For quick containment of actual spills or preventative measures against anticipated spills; tl
(3" x 10' standard length/linkable) will contain the spill, biodegrade the contaminant and the
Custom lengths available.

Learn more »

Well Boom

Designed to facilitate testing in groundwater monitoring wells; WellBoom absorbs contamin
well and will not allow the hydrocarbon to leach back into the ground water upon removal.

Learn more »

Oil Buster

PRP combined with different grades of ground corncob for use on hard surfaces.

Our Products | Testimonials | Documentation | Case Studies | Photo Gallery

© 2005 Universal Remediation, Inc.

UniRemInc
Universal Remediation, Inc.

1405 Parkway View Drive
Pittsburgh PA 15205
Email: sales@unireminc.com
Phone:
Fax: 41
Toll Fre

PRP Powder

PRP Powder is especially well adapted for moderate to small spills in areas such as industrial plant settings (such as cooling ponds and tanks), shorelines - whether rocky or sandy - marinas, railroad tracks, oil wells/oil fields, maintenance facilities, truck roll-overs, and marshes/wetlands remediation where PRP can mitigate the collateral damage to the ecosystem caused by clean up crews.

Methods of applying PRP range from a simple hand sprinkle to portable, mechanized hydro seeders.

PRP consists of tiny spheres of treated wax, which contain nutrients. When a wax sphere comes in contact with spilled oil, it "binds" with the hydrocarbons. Nutrients in the sphere help microorganisms from the imm environment flourish until they eat every droplet of oil. PRP will absorb and remediate, ove than 20 times its weight.

PRPs initial efficacy was quantified under simulated field conditions. This efficacy study wa by an independent environmental technology evaluation organization known as the Nationa Environmental Technology Applications Corporation (NETAC). NETAC was key in the deve methods currently used by the U.S. EPA to evaluate biological methods that enhance oil sp degradation. There are five key findings of the study:

1. PRP Powder enhances the biodegrading of diesel fuel as compared to non-stimulat population of micro organisms.
2. PRP Powder treatment reduced the presence of aliphatic hydrocarbon compounds aromatic compounds by 76%; reduction in the control product were 48% of aliphatic and 5% of aromatic compounds.
3. PRP Powder interacts with diesel fuel oil to form a matrix, producing a mixture whic relatively stable.
4. No enhancement in biodegradation was found in the control group of sorbents.
5. PRP Powder used in conjunction with an absorbent and a boom, absorbs petroleun and enhances the biodegradation of diesel fuel oil by absorption into the sorbent bc

PRP is now in use in multiple remediation scenarios across a wide spectrum of industries.

© 2005 Universal Remediation, Inc.

APPENDIX D

APRAP SUMMARY AND CHECKLIST

DEP Form # 62-785.900(3)
Form Title: Remedial Action Plan Summary
Effective Date: _____

Remedial Action Plan Summary

Site Name Area of Concern 2 (AOC2) Former Above Ground Storage Tank (AST) located at the Naval Support Activity (NSA)

FDEP BF Site ID No. 03/8518667

Location Panama City,Panama City Beach,Florida

Current Date 03/21/07

Date of Last GW Analysis 03/06

CHECK ALL THAT APPLY:

Media Contaminated: Groundwater Sediment Soil Air

Type(s) of Product(s) Discharged:

Gasoline / Kerosene Analytical Group
Listed Hazardous Waste
Other types of contaminants (solvents, etc.)
List:_____

Method of Groundwater Disposal:

Infiltration Gallery Sanitary Sewer
Surface Discharge/NPDES Injection Well
Other _____

Plume Characteristics:

- Estimated Mass (lbs):
  Groundwater 5,622 lb Soil 36,000 lb
- Area of Plume 89,660 (ft^2)
- Depth of Plume 30 (ft)

Groundwater Recovery and Specifications:

- No. of Recovery Wells 2
  Vertical Horizontal
- Design Flow Rate/Well 150 (gpm)
- Total Flow Rate 240 (gpm)
- Hydraulic Conductivity 11.5 (ft/day)
- Recovery Well Screen Interval 1.5 to 10 (ft)
- Depth to Water 1.5 to 6.0 ft bgs (ft)

Method of Groundwater Remediation:

Pump-and-Treat:
Air Stripper
Low Profile Packed Tower
Diffused Aerator
Activated Carbon
Primary Treatment Polishing
In Situ Air Sparging - Pressure:_____(psi)

- No. of Sparge Points _____
  Vertical Horizontal
- Design Air Flow Rate/Well _____ (cfm)
- Total Air Flow Rate _____ (cfm)

Biosparging:

- No. of Sparge Points _____
  Vertical Horizontal
- Design Air Flow Rate/Well _____(cfm)

Bioremediation:
In Situ Ex Situ
Other _____

Free Product Present: Yes No

- Estimated Volume 1964 (gal)

Method of Soil Remediation:

Excavation:
Volume to be excavated 889 (yd^3)
Thermal Treatment Land Farming On Site
Landfill Bioremediation
Other Dewatering Transport and treatment disposal off site

Vapor Extraction System (VES):

- No. of Venting Wells _____
  Vertical Horizontal
- VES - Applied Vacuum _____
- Design Air Flow Rate _____ (cfm)
- Design Radius of Influence _____ (ft)
- Air Emissions Treatment
  Thermal Oxidizer Catalytic Converter
  Carbon Other _____

Soil Bioventing:

- No. of Venting Wells _____
  Vertical Horizontal
- Design Air Flow Rate _____(cfm)

In Situ Bioremediation
Other _____

Natural Attenuation:

Groundwater Soil

- Method of Evaluation:
  Historical Trends
  Site-Specific Parameters

Estimated Time of Cleanup: 30 days Excavation

- Method of Estimation:
  Pore Volumes (no. of pore vols. =_)
  Exponential Decay (Decay Rate) _____(day^{-1})
  Groundwater Transport Model_____

- Maximum Thickness 7.4 (in) Other _____

- Method of Recovery (check all that apply):

Dual Phase Extraction Sump and trench with phase separation, effluent treatment and disposal

REMEDIAL ACTION PLAN & SYSTEM DESIGN CHECKLIST

Bureau of Petroleum Storage Systems
Florida Department of Environmental Protection

Facility Name:	Area of Concern 2 (AOC2) Former Above Ground Storage Tank (AST) located at the Naval Support Activity (NSA)	Preapproval Site:	[ ]
Location:	Panama City,Panama City Beach,Florida	State Cleanup Site:	[ ]
FAC ID No:	03/8518667	Voluntary Cleanup Site:	[X]
Reviewer:		Contractor:	Tetra Tech NUS, Inc. (TtNUS)

This checklist should not be applied in blanket fashion. Technical judgment may be necessary in determining the applicability of some items. However, all information listed that is relevant to the remedial design should be provided.

I. GENERAL

_X_____ (1) RAP signed, sealed, and dated by Florida P.E. (per Section 471.025, FS)

Voluntary (2) indication whether proposed plan is for preapproval program, state contracted cleanup, or voluntary cleanup

__2.0____ (3) recap of SAR information and conclusions pertinent to RAP preparation

__2.3____ (4) current sampling results [within nine (9) months] used for remediation system design

__2.6____ (5) potable water considerations:

- method of potable water supply to site and surrounding area
- locations of private wells within 1/4-mile, and public wells within 1/2-mile radius of site
- indication whether FDEP district office drinking water program was notified if contaminated groundwater could be expected to reach any public or private water well. Method of notification, person notified, and date

___X____ (6) identification underground utilities locations, and those which may enhance transport of contaminants

___6.4____ (7) • cleanup time: estimated cleanup time for the groundwater, for the soil

___6.0____ (8) fencing of treatment area required, unless public access is restricted by institutional controls

____5.1___ (9) local, state, and federal permits to be obtained, and conditions stated

___5.2____ (10) recap of alternatives discussed and/or alternative selected during pre-RAP conference, or cost-effectiveness analysis of alternatives and identification of recommended alternative

___X____ (11) statement that signed and sealed as-built (record) drawings will be provided

___X____ (12) nuisance noise and odor to neighbors avoided by careful location of equipment items and exhaust stacks or other mitigating measures

II. REQUIREMENTS OF THE PRE-APPROVAL PROGRAM REMEDIAL ACTION INITIATIVE (RAI)

For cleanup projects affected by the Pre-Approval Program Remedial Action Initiative, the requirements of this section apply. The items listed below in this section are to be taken into account for each of the operations covered by the other sections of this checklist.

___7.5____ (1) Cleanup Goals established. End of Active Remediation goal: 70% of natural attenuation default concentrations (NADC), or 90% reduction of each contaminant group, in each key well in the source area, whichever is more

FAC ID No: 03/8518667

stringent, in the specified time frame (typically one to four years). Longer cleanup times to achieve end of active remedial action goal require special justification.

__Planed_____ (2) Pilot testing of the proposed remediation strategy is generally required. Exceptions require special justification.

____HASP___ (3) Remediation equipment must meet the specifications contained in the Remedial Action Initiative including reasonable safety factors.

____6.0___ (4) System designs includes adequate source area treatment wells, e.g. a safety factor of 2, and consideration of using parallel or zoned systems.

____7.5___ (5) Ultimate cleanup target levels need to be indicated, either (CTLs) of Chapter 62-770 for unconditional NFA, or Alternative CTLs for conditional NFA. For conditional NFA, owner's acknowledgement of future institutional controls at cleanup completion should be documented

____7.5___ (6) End of Active Remediation to be followed by Natural Attenuation Monitoring. An evaluation of "time to switch" from active remedial action to Natural Attenuation Monitoring to reach ultimate cleanup target levels may be performed to allow for the continuation of active remedial action if justified.

____7.2___ (7) Milestones schedule must be included in RAP using the BPSS milestone model. The schedule must identify key wells, contaminants of concern, baseline contaminant concentrations, and time to reach the end of active remedial action. A linear concentration vs. time profile shall apply to each contaminant group in each key well.

____N/A___ (8) Applicability of "difficult sites" evaluation procedures established (mandatory if post-assessment cleanup cost will likely exceed $500,000 or cleanup time will exceed 4 years). Some elements of the "difficult sites" evaluation procedures may be applicable to sites with cleanups, which will not exceed $500,000, or a 4 year cleanup time. If applicability established, FDEP PE must complete difficult sites checklist attached to May 21, 2003 Difficult Sites memorandum.

____6.4___ (9) RAP must include a Construction Plan and a construction schedule.

___N/A____ (10) RAP must include a Startup Test Plan, and startup testing must be conducted in accordance with manufacturer's recommendations.

___N/A____ (11) RAP must include a Preventative and Routine Maintenance Plan and checklist, a Repair Response Plan and maintenance visit schedule. The repair response plan must address sytem monitoring, equipmant operation and replacement part availability and supply.

___N/A____ (12) RAP must indicate that equipment will be UL approved (or equivalent) and will have a warranty

___N/A____ (13) Hour meters, flow meters, pressure gauges, and vacuum gauges specified for all critical components, including individual wells if necessary for optimization of system efficiency

__N/A_____ (14) Autodialer system specified (telemetry may be specified with justification)

__X_____ (16) Equipment items must be protected (covered or housed in a trailer).

___N/A____ (17) Specifications, and an Operations Manual must be provided to FDEP/LP, and a copy must be kept at the site.

__7.2_____ (18) RAP specifies that Startup, Quarterly and Annual Reports will be provided, and must include the information detailed in the RAI.

III. FREE PRODUCT REMOVAL

___2.5____ (1) free product plume identification

FAC ID No: 03/8518667

___6.0____ (2) description/design details of free product recovery system including:

♦ oil/water separator sizing calculations and detention time ♦ free product storage tank of adequate size

___6.0____ (3) automated product pump shutdown for high level in product tank

___X____ (4) safety considerations: ♦ static electricity ♦ electrical & instruments per National Electrical Code

___6.2____ (5) proper disposal and safe handling of flammable free product recovered

IV. SOIL REMEDIATION - GENERAL

___4.1____ (1) volume of contaminated soil

___N/A____ (2) recap of Source Removal activities and soil volume already excavated, if any

___X____ (3) indication that contaminated soil will be remediated, or provide rationale for 'no action'

(4) soil cleanup target levels identified, extent of soil contamination should be delineated by use of both OVA screening results and laboratory analysis results

(5) Use of Level I Risk Management Options for soil considered, if applicable, including SPLP, TRPH fractionation, and calculation of site specific SCTLs based on soil properties

___5.1____ (6) proper handling & treatment of excavated, contaminated soil, or proper handling & disposal of hazardous soil (e.g., ignitable, corrosive, reactive, toxic, or petroleum refining waste)

V. LAND FARMING OF SOIL

__N/A_____ (1) adequate surface area available (_____ sq ft) to spread soil 6 to 12 inches thick

___N/A____ (2) location of land farming operation

__N/A_____ (3) land farming area is flat (less than 5% slope)

___N/A____ (4) impermeable base provided. Type: _____

___N/A____ (5) surface water runoff controls provided

___N/A____ (6) groundwater monitoring plan proposed if land farm is outside of immediate contamination area

___N/A____ (7) frequency of tilling provided

___N/A____ (8) frequency and details of nutrient application or other enhancements provided (if proposed)

___N/A____ (9) soil sampling frequency and sampling methods provided

___N/A____ (10) potential for land farm causing nuisance conditions evaluated

(11) underlying soil and groundwater monitoring procedures provided and acceptable

___N/A____ (12) land farming will be continued until the contaminants of concern meet soil cleanup target levels

___N/A____ (13) cost-effectiveness

___N/A____ (14) ultimate disposition of soil discussed

___N/A____ (15) need to fence land farm area considered

VI. LANDFILLING OF SOIL

___N/A____ (1) landfill lined and permitted by FDEP

___N/A____ (2) name and location of landfill provided along with conditions of acceptance

___N/A____ (3) cost-effectiveness

FAC ID No: 03/8518667

___N/A____ (4) For out-of-state landfill disposal, evidence provided that petroleum contaminated soil disposal in the landfill complies with the landfill regulations of the other state.

VII. SOIL THERMAL TREATMENT

__N/A_____ (1) name and location of thermal treatment facility provided

__N/A_____ (2) facility is permitted for thermal treatment of petroleum contaminated soil

__N/A_____ (3) pretreatment soil sample analyses

___N/A____ (4) cost-effectiveness

VIII. COMMERCIAL BIOREMEDIATION OF SOIL

__N/A_____ (1) name and location of bioremediation facility provided

__N/A_____ (2) facility is permitted for bioremediation of petroleum contaminated soil

__N/A_____ (3) pretreatment soil sample analyses

__N/A_____ (4) cost-effectiveness

IX. IN SITU BIOVENTING OF SOIL

__N/A_____ (1) soil cleanup criteria identification

__N/A_____ (2) estimated mass of contaminants of concern in the vadose zone

__N/A_____ (3) recap of information and data from pilot study that is pertinent full-scale system design

___N/A____ (4) layout

- well type — vertical or horizontal
- well construction details
- location of air injection and air extraction wells with respect to contaminated soil plume location and depth
- location and depth of soil gas monitoring probes with respect to contaminated soil plume and the air injection and extraction wells

__N/A_____ (5) design and operating parameters, equipment sizing calculations, mechanical details

__N/A_____ (6) instruments, controls, gauges, and valves

___N/A____ (7) monitoring plan: CO_2; pertinent bioremediation parameters; contaminants of concern

___N/A____ (8) air emissions

- demonstration that primary mechanism of remediation will be bioremediation and not volatilization. Air flow rates will be limited based on oxygen demand for bioremediation as demonstrated by pilot study results
- evaluation of methods for off-gas treatment if pilot test indicated that a significant amount of hydrocarbon volatilization will occur

X. SOIL VAPOR EXTRACTION

__N/A_____ (1) prerequisites: ♦ relatively permeable soil ♦ depth to groundwater > 3 ft ♦ relatively volatile contaminants

___N/A____ (2) recap of information and data from pilot study that is pertinent to full-scale system design:

(3) full-scale design

FAC ID No: 03/8518667

__N/A_____ (a) layout and spacing of SVE wells (consideration given to radius of influence and overlapping of radii)

__N/A_____ (b) vapor extraction well(s)

- no. of wells ♦ cfm each well ♦ total cfm ♦ well type (vertical or horizontal) ♦ well construction details

__N/A_____ (c) pneumatic design

- operating vacuum @ wellhead(s) (inches of water)
- piping system friction losses
- pump motor (hp) based on system losses plus required vacuum at wellhead

__N/A_____ (d) vacuum source type: regenerative blower; positive displacement vacuum pump; other

- design specifications: cfm @ inches of water; operating cfm @ inches of water
- mfr; model; motor hp; rpm; performance curves
- nonferrous materials of construction and/or assembly to minimize potential for sparking and friction
- explosion-proof motor

__N/A_____ (e) moisture separator/condensation trap ("knock out pot") prior to inlet of vacuum pump

__N/A_____ (f) surface sealing provided for vacuum extraction, or existing concrete or asphalt adequate

__N/A_____ (g) safety

- system operation at approximately 25% of Lower Explosive Limit (LEL)
- bleed valve provided to control flammable vapor concentrations

___N/A____ (h) instrumentation, gauges, and appurtenances

___N/A____ (i) air emissions control (general)

- method of off-gas treatment to be provided during first month of system operation (provide details in Section X or XI for carbon adsorption or thermal oxidation of off-gas, or provide details of an alternative method)

___N/A_____ (j) system monitoring

- sample and analyze air emissions for total petroleum hydrocarbons, weekly for first month, monthly for next two months, quarterly thereafter
- vacuum measurement locations (suggestion: use monitor wells at various radial distances from extraction wells)
- acknowledge that air emission controls must be provided for at least first 30 days, but may have to be continued longer until petroleum hydrocarbon emissions to the atmosphere are less than 13.7 lbs/day

XI. VAPOR-PHASE CARBON ADSORPTION (for control of air emissions)

___6.2____ (1) recap of information and data from pilot study that is pertinent to full-scale system design, if a pilot was conducted

___X____ (2) cost-effectiveness evaluation in comparison to other alternatives for control of air emissions

___6.2____ (3) mechanical details, sizing calculations, and operating parameters

__X_____ (4) instrumentation, controls, gauges, sampling and valves

__X_____ (5) safety

- operation of system below Lower Explosive Limit (LEL) for type of vapors being handled

FAC ID No: 03/8518667

- observance of appropriate requirements in Series 500 articles of the National Electrical Code — equipment shall meet either Class I, Group D, Division 1 or Class I, Group D, Division 2 hazardous area requirements, whichever is applicable, when an equipment item is located in a hazardous area as defined by the code

XII. THERMAL/CATALYTIC OXIDATION (for control of air emissions)

__N/A_____ (1) cost-effectiveness evaluation in comparison to other alternatives for control of air emissions

__N/A_____ (2) mechanical details, equipment sizing calculations, and operating parameters

__N/A_____ (3) instrumentation, controls, gauges, and valves. [schematic or mobile unit manufacturer's drawings indicating instrumentation, controls, gauges, and valves for all process streams (contaminant-laden influent, fuel gas, and combustion air)]

___N/A____ (4) safety considerations include, but are not limited to:

- bleed valve or dilution control valve to maintain influent flammable vapor concentration at 25% of the Lower Explosive Limit (LEL)
- air purge prior to re-ignition
- observance of appropriate requirements in Series 500 articles of the National Electrical Code — equipment shall meet either Class I, Group D, Division 1 or Class I, Group D, Division 2 hazardous area requirements, whichever is applicable, when located in a hazardous area as defined by the code
- use of thermal or catalytic oxidizers which meet appropriate fire codes for handling natural or propane gas and prevention of furnace explosions — National Fire Protection Association, Industrial Risk Insurer's, Factory Mutual, etc. Some of the most important safety shutdowns for gas-fired burners occur upon: high gas pressure; low gas pressure; loss of combustion supply air; loss or failure to establish flame; loss of control system actuating energy; power failure

XIII. GROUNDWATER EXTRACTION

___6.2____ (1) feasibility of using existing on-site wells for groundwater extraction considered

___X____ (2) recovery well summary

- recovery well or trench location(s) and construction details included (diameter, screen length, grout, etc.)
- recovery well depth and screen length appropriate for depth of contamination

____2.4___ (3) predicted horizontal and vertical area of influence provided

___N/A____ (4) expected drawdown in recovery well or trench

___6.2____ (5) consideration of multiple well configuration to minimize drawdown

__X_____ (6) groundwater pump performance requirements, sizing, and description

- hydraulic design considerations (friction losses and suction lift)
- pump performance curve or information provided (flow rate vs. pressure)
- pump manufacturer, model; hp, rpm

___X____ (7) automated well level controls provided for stopping/starting groundwater pump(s)

____X___ (8) totalizing flowmeter installed on influent line from each groundwater recovery pump

___P&ID____ (9) check valve provided on pump discharge piping if not integral to pump

FAC ID No: 03/8518667

___6.2____ (10) shutoff/throttling valve provided on pump discharge piping

XIV. GROUNDWATER TREATMENT SYSTEM - GENERAL

____Planned___ (1) influent concentrations for each contaminant of concern, for design of treatment system, based on either actual dynamic pump test sample, weighted averaging procedure, or other reasonable assumption

____X___ (2) feasibility & cost-effectiveness of direct discharge of recovered contaminated groundwater to sewer treatment plant, instead of onsite treatment

____P&ID___ (3) site piping summary

- schematics of all treatment components, piping, valves, controls and appurtenances provided
- influent and effluent sampling ports provided
- piping type and size provided

___X____ (4) fouling & scaling considerations

- whether control of iron fouling is necessary, either by filtration of influent to remove particulately-bound iron, and/or by removal or sequestering of dissolved iron to prevent precipitation in process equipment items
- whether pretreatment or other measures necessary to prevent precipitation of calcium carbonate (Langelier Index)
- whether pretreatment or scheduled O&M measures will be needed for control of biofouling

XV. AIR STRIPPING TREATMENT PROCESS

____N/A___ (1) packed tower

- type, size, and surface area of packing
- design and operating parameters, sizing calculations, mechanical details (tower height; packing type, height, surface area; air/water ratio; pressure drop; blower type, model, hp; mist eliminator; etc.)

___N/A____ (2) diffused aerator (tank type)

- design and operating parameters, sizing calculations, mechanical details (tank volume; contact time; air flow rate; pressure drop; removal efficiency of contaminants of concern; blower type, model, hp; etc.)

___6.2____ (3) low profile air stripper

- design and operating parameters, sizing calculations, mechanical details (number of trays; water flow rate; air flow rate; air/water ratio; pressure drop; blower type, model, hp; mist eliminator)

__P&ID_____ (4) general

- instrumentation, controls, gauges and valves
- air emissions calculations; emissions stack height
- equipment description if emissions treatment necessary
- automated recovery well shutdown when blower failure occurs
- sampling of effluent, daily for first three days, monthly for next two months, quarterly thereafter

XVI. LIQUID-PHASE CARBON ADSORPTION

__Planned_____ (1) recap of information and data from pilot study that is pertinent to full-scale system design, if a pilot was conducted

__6.2____ (2) indication whether adsorption is for primary treatment of groundwater or polishing of effluent

FAC ID No: 03/8518667

__X__ (3) carbon specifications

__6.2__ (4) carbon unit(s) sizing calculations (carbon usage rate, contact time, pressure losses) design assumptions

__Planned__ (5) TOC in groundwater determined and effect on carbon usage considered

__6.2__ (6) need for sand filter or cartridge unit prior to carbon unit considered

__X__ (7) pressure gauge and pressure relief valve provided on carbon (and sand) filter

__X__ (8) carbon disposal and replacement method

__X__ (9) series configuration of carbon units considered to allow for maximum carbon utilization and prevention of contaminant breakthrough to system effluent

__X__ (10) automated recovery well shutdown if primary carbon unit pressure too high

__7.3__ (11) schedule for sampling between and after carbon adsorption units

XVII. IN SITU AIR SPARGING OF GROUNDWATER

N/A (1) prerequisites

- no or little free product which could spread via sparge turbulence, or prolong sparging
- volatile (C_3-C_{10}) petroleum fractions with Henry's Constant ≥ 0.00001 atm$*$m^3/mol (approx. rule of thumb, unless biosparging is proposed)
- no high concentrations of metals (iron, magnesium) to form oxides which plug aquifer or well screens, or high concentrations of dissolved calcium, which could react with CO_2 in air to clog aquifer w/calcium carbonate

N/A (2) recap of information and data from pilot study that is pertinent to full-scale system design

(3) full-scale design

N/A (a) groundwater contamination plume coverage

- location(s) and radius of influence for full-scale air injection well(s)
- adequate coverage by overlapping radii of influence if multiple well system

N/A (b) air injection well(s): no. of wells; well design; operating air pressure at wellheads; cfm each well; total cfm _____

N/A (c) avoidance of long screen allowing air to diffuse at top portion only, where air flow resistance is least (typ screen is 1 to 3 ft long)

N/A (d) well depth and screened interval (or depth of sparge tip) appropriate w/respect to depth of contamination

N/A (e) vapor extraction well(s) in conjunction w/sparging situated properly to recover volatiles and prevent their release to atmosphere

- injection cfm of air typically 20 to 80% of vapor extraction cfm (0.2 to 0.8)
- automatic shutdown of air injection upon loss of, or low, vapor extraction system vacuum, or failure of vacuum pump motor, in order to prevent air emissions
- adequate and cost-effective treatment of vapor extraction system off-gas proposed to prevent air emissions

N/A (f) compressor

- design: cfm @ psig; operating cfm @ psig

FAC ID No: 03/8518667

- type; mfr; model; motor hp; rpm; performance curves; air filter at compressor inlet; oil trap or oil-free compressor to avoid introducing more contamination to aquifer

N/A (g) safety: pressure relief valve at discharge of compressor and/or high pressure switch for automatic shutdown

N/A (h) instrumentation and gauges: pressure indicating gauges at each sparging well

N/A (i) air flow control: shutoff/throttling valve at each well; other flow control device or method

XVIII. IN SITU BIOREMEDIATION

N/A (1) general:

- media to be remediated: groundwater; soil
- application method: direct-injection; recirculating/re-injection type system; addition to excavation pit
- aerobic or anaerobic
- stimulation of indigenous microorganisms or addition of microorganisms

N/A (2) recap of information and data from pilot study that is pertinent to full-scale system design

N/A (3) design and operating parameters (e.g.: injection well construction details; layout and spacing of wells commensurate with injection radius of influence for adequate horizontal coverage; screened interval of injection wells commensurate with vertical extent of contamination for adequate vertical coverage; injection pump develops adequate pressure and flow rate for injection , for the site-specific conditions.)

6.3 (4) dosage (of nutrients and/or microorganisms, per pound of hydrocarbon contaminants to be biodegraded) (Some bioremediation products may express dosage as a required amount per cubic yard of contaminated media.)

N/A (5) RAP (or RAP Mod) must contain the necessary underground injection control information required by Chapter 62-528 FAC. [That is, the RAP must contain enough information for a state or local program reviewer to fill out the 2-page UIC notification memorandum titled "Proposed Injection Well(s) for In Situ Aquifer Remediation at a Petroleum Remedial Action Site".] This includes the following information:

- chemical analysis (composition) of the fluid to be injected. Note: The injected fluid must meet primary and secondary drinking water standards of Chapter 62-550, FAC, and the minimum groundwater criteria of Chapters 62-520 and 62-777 FAC, otherwise Rule 62-522.300(2)(c) may apply and/or a zone of discharge variance may be necessary.
- no. of injection wells
- no. of injection events
- injection volume per well per injection event
- total injection volume (i.e. the total for all injection wells, all injection events)

N/A (7) anticipated schedule of injection events for nutrients and/or microorganisms (i.e. the timing and frequency of injections over the life of the project)

N/A (7) provide additional oxygen, if necessary, if the bioremediation is aerobic and site's groundwater is lacking in dissolved oxygen. (method by which additional oxygen will be delivered.; provide design details if method of delivery is mechanical, e.g. air sparge, O_2 injection, iSOC, etc.; provide chemical information if oxygen is supplied chemically: e.g. magnesium peroxide, calcium peroxide, hydrogen peroxide, etc.)

N/A (9) ♦ sampling plan includes not just the analysis of samples for petroleum contaminants of concern at a site, but also analyses necessary for any of the following that apply: compliance with the underground injection control

FAC ID No: 03/8518667

regulations of Chapter 62-528; compliance with Rule 62-522.300(2)(c); and compliance with the terms of an injection zone of discharge variance. Also, analysis for more than just the reagents may be necessary, depending on the situation. In some cases, if there are environmental or toxicological concerns, it may be necessary to include analysis for intermediate degradation products of the reagents, or intermediate by-products formed by the interaction of those reagents with the petroleum contaminants of concern at a site.

- other samples and operating parameter measurements for a bioremediation project may inlcude, but are not necessarily limited to the following: pH, DO, ORP, N, P, Temperature, TOC, Alkalinity., microbe counts

XIX. LEAD (this section can also be adapted to other heavy metals if necessary)

N/A (1) discussion of area(s) where groundwater lead concentration exceeds 15 ppb

N/A (2) lead concentrations (ppb): unfiltered (____); filtered (____); background (____)

N/A (3) proposal for lead removal by filtration if unfiltered sample is greater than 15 ppb and filtered sample is less than 15 ppb

N/A (4) method of lead removal, including pertinent design calculations

N/A (5) if lead (or other heavy metals) will not be removed by filtration, then provide details of proposed treatment

XX. INFILTRATION GALLERY

N/A (1) recap of field percolation test results (preferably with double-ring infiltrometer)

N/A (2) infiltration gallery construction details and location (upgradient location if site layout allows)

N/A (3) gallery calculations/assumptions with mounding analysis

N/A (4) piezometer and cleanout pipe in gallery

N/A (5) geotextile filter fabric to be installed around and above gallery

N/A (6) discussion or modeling of gallery for effect on plume migration

XXI. INJECTION WELL (for effluent disposal)

N/A (1) discussion of injection zone and relevant lithology information

N/A (2) recap of information and data from pilot study that is pertinent to full-scale system design, if a pilot was conducted

N/A (3) injection well location and construction details

N/A (4) screened interval appropriate

N/A (5) effluent discharge pump adequately sized for required injection flow rate and pressure

N/A (6) carbon polishing unit (or equivalent)

N/A (6) air release valve at highest point of effluent discharge piping

N/A (7) injection rate (well hydraulics) calculations

N/A (8) Underground Injection Control (UIC) inventory information provided. (RAP or RAP Mod must contain enough information for a technical reviewer to complete the 2-page UIC effluent injection notification.)

N/A (9) evaluation of injection well's effect on potable wells and plume migration

FAC ID No: 03/8518667

XXII. ALTERNATIVE EFFLUENT DISPOSAL METHODS

_____ (1) cost-effectiveness comparison of alternatives (including general permit fee of $2,500 per year in the cost estimate for NPDES disposal, if it is one of the alternatives being compared)

_____ (2) for surface water discharge

- conditions for NPDES general permit met
- indication that notice of intent for NPDES permit will be submitted after RAP approval

_____ (3) if applicable, consumptive use permit obtained from Water Management District

_____ (4) approval from municipality for sewer discharge, and conditions and effluent standards to be met

_____ (5) applicable permits for stormwater discharge

XXIII. SAMPLING REQUIREMENTS

___7.1____ (1) designated / key monitoring wells and frequency of their sampling per 62-770.700, FAC

____X___ (2) analysis of designated / key monitoring well samples for appropriate contaminants of concern for the site

___7.3____ (3) sampling of influent from recovery well(s); daily first 3 days, monthly next 2 months, quarterly thereafter

___X____ (4) sampling of system effluent, daily for first three days, monthly for next two months, quarterly thereafter

____X___ (5) water level data collected at same time & frequency of monitoring well and recovery well sampling

XXIV. IN SITU CHEMICAL OXIDATION

___5.1____ (1) media to be remediated: groundwater; soil

___Planned____ (2) recap of information and data from pilot study that is pertinent to full-scale system design

___N/A____ (3) design and operating parameters (e.g.: injection well construction details; layout and spacing of wells commensurate with injection radius of influence for adequate horizontal coverage; screened interval of injection wells commensurate with vertical extent of contamination for adequate vertical coverage; flow rates; temperatures; pressures; pH; concentrations, etc.)

___N/A____ (4) amount of reagents required per pound of hydrocarbons to be destroyed (theoretical amount, actual amount)

____N/A___ (5) RAP (or RAP Mod) must contain the necessary underground injection control information required by Chapter 62-528 FAC. [That is, the RAP must contain enough information for a state or local program reviewer to fill out the 2-page UIC notification memorandum titled "Proposed Injection Well(s) for In Situ Aquifer Remediation at a Petroleum Remedial Action Site".] This includes the following information:

- chemical analysis (composition) of the fluid to be injected. Note: The injected fluid must meet primary and secondary drinking water standards of Chapter 62-550, FAC, and the minimum groundwater criteria of Chapters 62-520 and 62-777 FAC, otherwise Rule 62-522.300(2)(c) may apply and/or a zone of discharge variance may be necessary.
- no. of injection wells
- no. of injection events
- injection volume per well per injection event
- total injection volume (i.e. the total for all injection wells, all injection events)

___N/A____ (6) ♦ sampling plan includes not just the analysis of samples for petroleum contaminants of concern at a site, but also analyses necessary for any of the following that apply: compliance with the underground injection control regulations of Chapter 62-528; compliance with Rule 62-522.300(2)(c); and compliance with the terms of an

FAC ID No: 03/8518667

injection zone of discharge variance. Also, analysis for more than just the reagents may be necessary, depending on the situation. In some cases, if there are environmental or toxicological concerns, it may be necessary to include analysis for intermediate degradation products of the reagents, or intermediate by-products formed by the interaction of those reagents with the petroleum contaminants of concern at a site.

- other samples and operating parameter measurements for a chemical oxidation project may inlcude, but are not necessarily limited to the following: pH, DO, ORP, Temperature, and Alkalinity.

___N/A____ (7) anticipated schedule of injection events for reagents (i.e. the timing and frequency of injections over the life of the project)

____N/A___ (8) safety (items applicable to fire, explosion, toxicological and safe handling of chemicals may include, but are not necessarily limited to those listed below)

- material safety data sheets, toxicity, or other information pertinent to the chemicals and catalysts involved
- safe handling of chemicals: avoidance of mixing, premature mixing, or improper storage of incompatible chemicals
- Lower Explosive Level (LEL) considerations
- potential for vapor migration, either passively or by convection, or driven by air or other gases used, or generated by the heat of exothermic chemical reactions or the vaporization of free product by such heat
- the minimum tolerable distance between underground storage tanks and product piping and any in situ heat-generating process
- the need replace the flammable contents of petroleum storage tanks and their associated piping with non-flammable inerts such as nitrogen or carbon dioxide, in order to reduce risk of fire and explosion.
- observance of National Electrical Code (typically Series 500 articles for Class I, Group D, Division 1 or 2 hazardous area requirements) (for electrical equipment items located in a hazardous area)
- appropriate chemical-resistant and/or spark-resistant materials of construction for equipment items
- personal protection of workers
- safety considerations regarding neighbors and passersby