32501.032
19.06.32.0004

N00204.AR.000045
NAS PENSACOLA
5090.3a

11

FINAL REPORT
GENERAL CONCEPT ANALYSIS FOR IMPROVEMENTS AT THE WWTP, NAS PENSACOLA, FLORIDA

FINAL REPORT

GENERAL CONCEPT ANALYSIS
FOR MPROVEMENTS AT THE WWTP,
NAS PENSACOLA
PENSACOLA, FLORIDA

Prepared for

DEPARTMENT OF THE NAVY
SOUTHERN DIVISION, NAVAL FACILITIES ENGINEERING COMMAND
CHARLESTON, 'SOUTH CAROLINA
Contract #N62467-85-D-0267

Prepared by

GERAGHTY & MILLER, INC.
14310 North Dale Mabry Highway, Suite 200
Tampa, Florida 33618

and

JONES, EDMUNDS & ASSOCIATES, INC.
730 North Waldo Road
Gainesville, Florida 32601

June 20, 1986

GERAGHTY
& MILLER, INC.
#Ground- Water Consultants

June 20, 1986

Mr. D. R. Spell, P.E.
Southern Division
Naval Facilities Engineering Command
Corporate Square 1
2420 Mall Drive
Charleston, South Carolina 29406

Re: NAS Pensacola Wastewater-Treatment Plant, Contract No. N62467-85-D-0267

Dear Mr. Spell:

Geraghty & Miller, Inc., is pleased to present to you twenty (20) copies of the final report entitled, 'General Concept Analysis for Improvements at the WWTP, NAS Pensacola," dated June 20, 1986. This report has been a combined effort by Geraghty & Miller, Inc., and our subcontractor, Jones Edmunds & Associates, Inc.

Enclosed with these reports are five (5) copies of a letter from Jones Edmunds & Associates, Inc.., which discusses certain items with regard to upgrading the treatment plant in the future. As a result of our meeting on April 8, 1986 in Pensacola, it was decided that this information would be more appropriately conveyed in letter form.

Sincerely,

GERAGHTY & MILLER, INC.

William Bocskocsky

William P. Bocskocsky
Senior Scientist

Peter L. Palmer

Peter L. Palmer
Associate

Enclosures

Landmark Office Center • 14310 N. Dale Mabry Hwy. • Suite 200 • Post Office Box 271173 • Tampa, FL 33688-1173 • (813) 961-1921

Jones Edmunds & Associates, Inc. JEA
730 North Waldo Rwd / Gainesville, Florida 32601 / (904) 377-5821
CONSULTING ENGINEERS AND SCIENTISTS

RECEIVED
JUN 6 1986
Geraghty and Miller, Inc.

June 5, 1986

Geraghty & Miller, Inc.
P.O. Box 33688
14310 North Dale Mabry, Suite 200
Tampa, Florida 33618

Attention: Mr. Pete Palmer

Reference: Draft Report "General Concept Analysis for Improvements at the Pensacola Naval Air Station"
JEA Project No.: 07250-303-06-02

Dear Pete:

Enclosed please find two copies of the revised referenced report. The report has been modified per our discussions at our last meeting in Pensacola, Florida.

In that meeting, it was requested that certain recommendations be removed from the report and placed in letter form. Listed below are a number of observations and comments which should be taken into consideration when the wastewater treatment plant is next upgraded.

1. The pH of the industrial wastewater entering the wastewater treatment plant varies widely. One of the main reasons for this is the backwash of the cation and anion resins which provide water treatment for the steam plant. This results in the discharge of excess sodium hydroxide and excess sulfuric acid to the industrial waste stream. It would be beneficial to either equalize or control the pH of this waste material prior to being discharged to the treatment plant. The operators at the treatment plant are presently attempting to control the pH in the center well of the primary clarifier by taking hourly grab samples and manually adjusting the addition of sulfuric acid. Instrumentation of this pH control would be a major benefit to plant operators. A major concern is the potential of slugs of untreated cyanide being discharged to the wastewater treatment plant at the same time that a low pH existed in the clarifier which would liberate cyanide gas.

2. A number of volatile organic chemicals are being discharged to the industrial wastewater treatment plant and a portion of these chemicals are being volatilized in the clarifier and surge pond. The Florida Department of Environmental Regulation (DER) has not imposed limitation on air emissions from wastewater treatment plants; however, DER is in the process of

preparing regulations which would cause 1imitations on discharge of volatile organics from these sources.

3. The existing treatment facilities utilized for the removal of heavy metals are not the most efficient and will result in a carry over of floc containing heavy metals into the intermediate pond. This increases the metals content of the waste biological sludge creating the potential that it be classified as a hazardous waste. The problems with this facility include the need to upgrade the existing chemical feed equipment, the use of equipment where you cannot control the rate of rapid and slow mixing prior to settling, and the need to improve instrumentation of the chemical feed system which is now being operated manually.

4. The proposed addition of 150,000 gallons per day (gpd) of groundwater potentially contaminated with saltwater may cause an increase in sludge volume from the lime treatment units. Sludge removal is by two positive displacement pumps on a common suction line which means that if both lime treatment units are being operated in parallel that sludge can be removed from only one tank at a time. The existing sludge handling facilities from the lime treatment units should be evaluated in consideration of the potential of increased corrosion due to saltwater contamination and increased sludge volumes.

5. The efficiency of the existing intermediate pond to remove volatile organic chemicals is unknown at this time. Potential modifications to improve its efficiency might include the conversion of the pond from an existing aerated lagoon to an activated sludge system. This would require additional aeration and returning sludge from the activated sludge clarifiers. Modification to the existing piping could also reduce the potential for short circuiting within the pond.

6. The existing wastewater treatment plant has been modified on several occasions and, as a result, is a very complicated facility which is difficult to operate and maintain. It is recommended that prior to any further modifications that a detailed study of the complete facility be conducted prior to selection of new modifications. It is also highly recommended that the wastewater treatment plant operators be interviewed for their recommendations and insights as they work with the treatment plant on a day-to-day basis.

7. Prior experience has shown that it is frequently more cost effective to control wastewater sources rather than attempt to design a wastewater treatment plant to treat the wastewater

after it is generated. Frequently, wastewater sources can be reduced or even eliminated at minor cost compared with the continuing treatment of the material at a wastewater treatment plant. For this reason, it is highly recommended that a detailed study of NARF be conducted and the recommended modifications be made before major modifications to the wastewater treatment plant are designed.

If you have any comments or questions regarding this report please let us know.

Sincerely,

JONES, EDMUNDS & ASSOCIATES, INC.

David A. Keough, P.E.
Vice President

DAK/drPen.G&M31

Enclosure

TABLE OF CONTENTS

Table	Title	Page
	INTRODUCTION	1
I	FLEXIBLE MEMBRANE LINER	2
	EVALUATION	2
	TESTING PROGRAM	3
	Phase 1A - Manufacturer In-House Testing	3
	Phase 1B - Onsite Immersion	4
II	ALTERNATIVE CONCEPT AND ANALYSIS FOR SURGE POND REPLACEMENT	7
III	DESIGN CONCEPTS	13
	GENERAL	13
	SURGE TANK LINER/COATING SYSTEMS	18
	Reinforced Concrete Surge Tank	22
	Mechanical	22
	Piping	23
	COST ESTIMATE	23
IV	IWWTP ADDITIONAL FLOW IMPACT EVALUATION	28
V	MISCELLANEOUS TOPICS	50
	PIPELINE LEAK DETECTION AND REPAIR. REQUIREMENTS	50
	Implementation	51
	Testing	52
	DOMESTIC SLUDGE RETURN PUMPS	54
	Capacity	54
	Operation	54
	Remedy	55
	COST ESTIMATE	57

APPENDICES

APPENDIX A--WORKSCOPE	A-1
APPENDIX B--FLEXIBLE MEMBRANE LINER TESTING PROGRAM	B-1
APPENDIX C--CHEMICAL COMPATIBILITY TESTING REPORT	C-1

LIST OF TABLES

Table	Title	Page
1	Lined Impoundment	9
2	Reinforced Concrete Tank with Internal Secondary Containment Liner	12
3	Surge Tank Liner/Coating Systems	20
4	Tentative Budget Cost Estimate	24
5	Metal Analyses of Influent Industrial Wastewater and Groundwater	29
6	Priority Pollutant Analyses of Influent Industrial Wastewater and Groundwater	30
7	Chemical Analysis of Wastewater Treatment Plant Effluent	33
8	Miscellaneous Chemical Analyses of Influent and Effluent for the Wastewater Treatment Plant	46
9	Miscellaneous Chemical Analyses of Priority Pollutants in Wastewater Treatment Plant Influent and Effluent	47
10	Conceptual Cost Estimate	58

LIST OF FIGURES

Figure	Title	Page
1	HDPE Liner Sample Weight Gain Versus Onsite Immersion Time	5
2	Schematic Diagram of a Composite Double Liner System for a Surface Impoundment	8
3	Conceptual Surge Tank Illustrative Section	10
4	Histogram of Daily Flow IWWTP-NASPENS January 1982 - July 1985	14
5	Conceptual Surge Tank Illustrative Section	17
6	Proposed Site Layout	21
7	Sludge Piping Schematic	56

INTRODUCTION

INTRODUCTION

This report represents an overview of work performed by Jones, Edmunds & Associates, Inc. (JEA) concerning the general concept analysis for improvements at the Pensacola Naval Air Station (NAS) Industrial Wastewater Treatment Plant (IWWTP). The goal of this work was to develop a technically-sound evaluation of alternatives to replace the existing surge pond surface impoundment with a unit that would meet U.S. Environmental Protection Agency (EPA) Resource Conservation and Recovery Act (RCRA) requirements. The complete workscope is presented in Appendix A.

This report follows the same format as the workscope:

Section I	Flexible membrane liner (FML) evaluation
Section II	Alternative concept and analysis for surge pond replacement
Section III	Recommended conceptual design of improvements to existing return sludge pumps to allow efficient use of both existing activated sludge clarifiers
Section IV	Impacts of additional flows on the IWWTP
Section V	Pipeline leak detection and repair requirements which may need consideration.

The remaining task, presenting a cost estimate to perform a detailed review of the pretreatment facilities, will be provided under separate cover.

SECTION I. FLEXIBLE MEMBRANE LINER

SECTION I

FLEXIBLE MEMBRANE LINER

EVALUATION

To evaluate alternatives for replacing the existing surge pond surface impoundment with a RCRA-permittable unit, a preliminary evaluation of materials potentially suitable as a liner was necessary. A permittable replacement unit could be a double-lined surface impoundment or a new tank unit. The double-lined impoundment could be considered only if a liner material exists which is suitable for exposure to the compounds likely to be present in the wastewater.

To determine the technical feasibility of using a FML in a new surface impoundment pond, the chemical resistance of various FML materials was considered. The chemical analyses of the influent wastewater contained in the "Pensacola Naval Air Station Wastewater Treatment Plant" report prepared by JEA and Geraghty & Miller (G&M) (1984) were used as the basis for the evaluation. The FML materials considered for this application included Hypalon, Neoprene, PVC, chlorinated polyethylene (CPE), ethylene propylene diene monomer (EPDM), Hytrel, XR-5, and high-density polyethylene (HDPE). Manufacturer's published chemical resistance information was reviewed. Liner manufacturers and fabricators were contacted and the service application was discussed with their technical personnel.

As a result of this investigation, only Hytrel, XR-5, and HDPE are considered to be potentially suitable for this application. Of these three, HDPE is expected to perform the best with respect to chemical compatibility for this service application.

Copies of the influent wastewater chemical analyses were sent to the liner manufacturers for their review. Of the compounds listed, the following are considered by the liner manufacturers to have the highest potential of causing chemical degradation of the liner material:

Methylene chloride
Trichloroethane
Trichloroethylene
Phenols

Toluene
Methyl ethyl ketone
Benzenes

Of the liner manufacturers contacted, only the HDPE manufacturers claimed they would issue their standard warranty based on the chemical compounds and concentrations listed in the given analyses. They stated they already had sufficient chemical resistance data/experience to enable them to do this without the need for additional chemical compatibility testing.

The conclusion of the preliminary evaluation was that membrane liners are potentially suited for this application and warranted further testing. A detailed FML evaluation test program was finalized and implemented in December 1985 (FML Testing Program, JEA). The FML testing program and preliminary data is presented in Appendix B along with current weight change data. The goal of the program is to estimate the long-term degradation effects of the actual wastewater and a spiked solution of tap water on the liner.

TESTING PROGRAM

Phase 1A - Manufacturer In-House Testing

In developing the contract workscope, it was anticipated that material testing would consist of onsite sample immersion for a set period of time, often which the exposed and control liner samples would be shipped to the respective manufacturers for physical testing. Partially into the project, JE4 engineers determined that a more detailed testing program would provide better data on which to base compatibility judgments. To expedite performance of the revised testing program (FML Testing Program, JEA, 1985) without requesting a contract modification it was hoped that Navy personnel could assist in obtaining and shipping "spiked" samples of wastewater to the various manufacturers. Upon determination that Navy personnel could not be

made available due to timing requirements, a subsequent modification to the revised test program was developed. Liner manufacturers were asked to prepare their own "spiked" solutions for in-house testing. Gundle Lining Systems, Inc. stated that their lab is set up only for plastics testing, and the test solution would have to be furnished to them. National Seal Company stated they could prepare the test solution and do the testing; however, with their present backlog they estimated an April starting date. Schlegel Lining Technology, Inc. stated they could prepare the test solution and perform the testing. Schlegel started their laboratory immersion on February 24, 1986. On March 26, 1986 Schlegel reported by telephone that their in-house testing had been completed and the conclusion reached was that their HDPE liner system was suitable for that service exposure. The written test report was recieved from Schlegel on April 30, 1986 and attached as Appendix C.

Phase 1B - Onsite Immersion

As of March 21, 1986, liner sheet and seam samples had been immersed in the existing surge pond for 84 days. A plot of weight gain versus immersion time for each of the liner sheet samples is presented in Figure 1. As can be seen from the plots, all of the samples exhibit a similar response in that they have undergone an increasing rate of weight gain during the first 17 days of immersion and a decreasing rate of weight gain since Day 21. At the end of 41 days of immersion, Liner Samples 211 and 212 were at the weight change pass/fail criteria threshold of 3 percent (see FML testing program Appendix B). Data obtained on Day 84 appears questionable. Various personnel were handling the samples and consistent sample cleaning may have been compromised. Samples in 211 and 312 showed weight losses while the remaining samples continued to gain weight at a declining rate. Samples 111, 112, and 311 were approaching the 3.0 percent threshold. Some of the liner manufacturers have stated, however, that violation of the weight change criteria may be acceptable, if the weight change stabilizes and if the criteria for the other physical properties are not violated. In this case the weight change versus immersion time

data would be used primarily to indicate when physical property changes are no longer occurring. (Liner testing has in many cases correlated change of weight to change of physical properties; therefore, when weight change stabilizes it indicates that changes of the other physical properties are no longer occurring.) Once the weight change of the onsite samples stabilizes, one set of sheet and seam samples shall be removed for physical testing as described in Phase 1B of the FML testing program.

SECTION II. ALTERNATIVE CONCEPT AND ANALYSIS FOR SURGE POND REPLACEMENT

SECTION II

ALTERNATIVE CONCEPT AND ANALYSIS FOR SURGE POND REPLACEMENT

The existing surge pond is an abovegrade surface impoundment which does not meet current EPA requirements. Since the raw waste is designated as hazardous, the surge pond must meet Resource Conservation and Recovery Act (RCRA) construction requirements which include double liners, leak detection, and long-term groundwater monitoring for a hazardous waste storage impoundment. Given the potential suitability that FMLs display (see Section 1), it appears technically feasible to replace the existing impoundment with a similar impoundment which meets RCRA requirements. The alternative to providing a replacement impoundment is the installation of an abovegrade new tank system. A comparative cost analysis between these two systems was performed as part of the December 9, 1985 interim status report. The cost analysis is updated in this report.

Each alternative evaluated included the provision of approximately equal dead storage and work storage volumes as the existing surge pond. (Dead storage volume is approximately 610,000 gallons; working storage volume is approximately 500,000 gal1ons.) A conceptual cross-section of the double-lined surface impoundment is shown in Figure 2. Comparative costs were developed assuming HDPE liners and are presented in Table 1. This estimate does not include closure, excavation, and removal of the existing impoundment or ancillary facilities.

Figure 3 shows a conceptual cross-section of the new tank system used for the cost comparisons. A careful review of CFR 40, Parts 260 and 264, and the contents of the codification rule (Federal Register, June 12, 1985) was performed as it pertains to tankage. In this review pertinent exclusions to the new double liner, secondary containment requirements exist. Section 264.1 g(6) reads:

"g) The requirements of this part do not apply to:

6) The owner or operator of an elementary neutralization or a wastewater treatment unit as defined in Section 264.10 of this chapter."

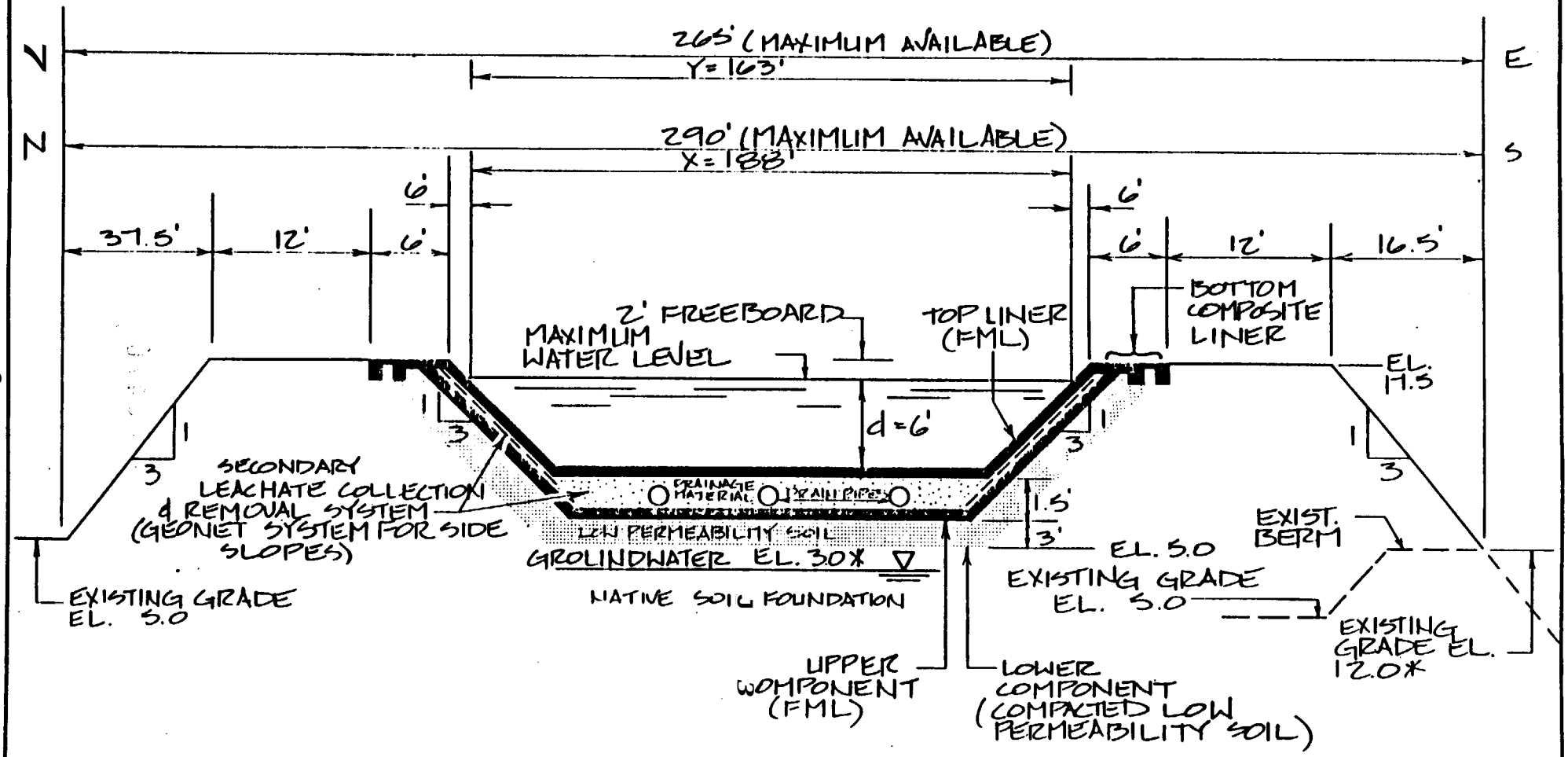

FIGURE 2. SCHEMATIC DIAGRAM OF A COMPOSITE DOUBLE LINER SYSTEM FOR A SURFACE IMPOUNDMENT

NOT TO SCALE

* REF.: L.M. JACOBS SEPT. 30, 1985 REPORT

Table 1. Lined Impoundment

	Item	Quantity	Unit	Unit Costs	cost
1.	Clear and grub site	2.06	ac	3,000.00	6,200.00
2.	Borrow (offsite)	19,000	cy	8.00	152,000.00
3.	Clay admix. liner	4,500	cy	21.20	95,400.00
4.	Top soil strip stockpile	3,800	cy	3.50	13,300.00
5.	Select sand drainage blanket	1,000	cy	20.00	20,000.00
6.	Soil cement exterior berm stab.	7,700	sf	1.00	7,700.00
Earthwork Subtotal					$294,600.00
Liner System					
a)	100-mil HDPE service liner	48,000	sf	1.05	50,400.00
b)	HDPE Geonet drainage blanket	29,000	sf	0.40	11,600.00
c)	60-Mil HDPE bottom line	48,090	sf	0.80	38,400.00
				Subtotal	$100,400.00
				TOTAL EARTHWORK & LINER	$395,000.00

Source: JEA, 1985.

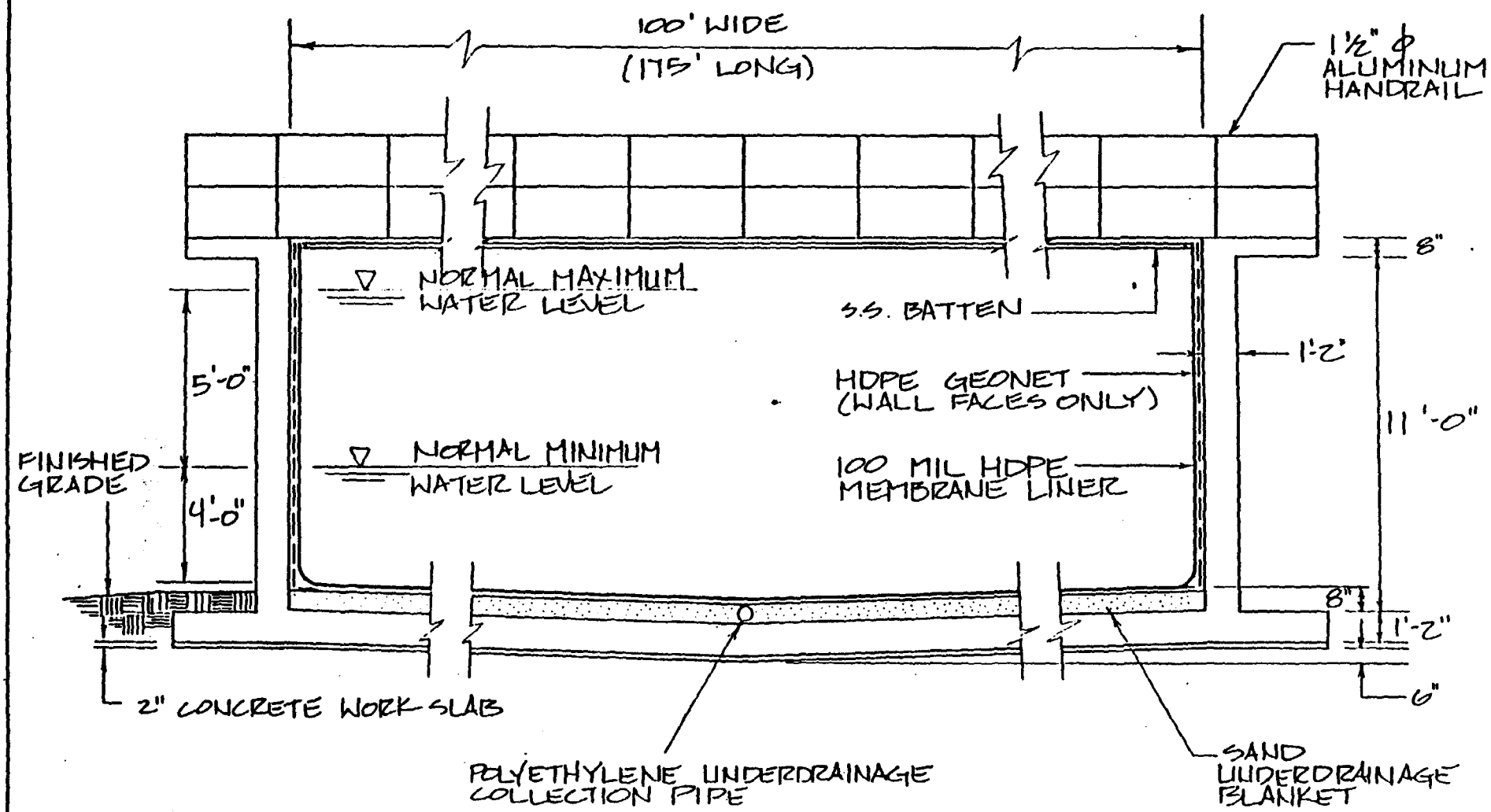

FIGURE 3. CONCEPTUAL SURGE TANK ILLUSTRATIVE SECTION

The referenced definition for a wastewater treatment unit is:

"'Wastewater treatment unit' means a device which:

(1) Is part of wastewater treatment facility which is subject to regulation under either Section 402 or Section 307(b) of the Clean Water Act; and

(2) Receives and treats or stores an influent wastewater which is a hazardous waste as defined in Section 261.3 of this chapter, or generates and accumulates as wastewater treatment sludge which is a hazardous waste as defined in Section 261.3 of this chapter, or treats or stores a wastewater treatment sludge which is a hazardous waste as defined in Section 261.3 of this chapter; and

(3) Meets the definition of tank in Section 260.10 of this chapter."

The exhaustive requirements for secondary containment of new tank systems presented in the June 12, 1985 Federal Register do not apply, by way of this exclusion, to any unit process within a wastewater treatment plant permitted under the auspices of the Clean Water Act; however, the unit must meet the definition of a tank. This indicates that the surge tank alternative does not require a liner system under the rules. Prudent design, however, would include a concrete protective coating system which could be constructed of liners and coatings. For comparative costing, a double-liner system was assumed. The comparative cost estimate for the tank system is presented in Table 2.

The comparative cost analysis demonstrates that the lined concrete tank system offers a cost advantage over the lined surface impoundment ($381,000 versus $395,000) for equal volumes even excluding the long-term expense of groundwater monitoring for the surface impoundment. Based on this determination, the preliminary conceptual design of the surge facility is based on providing a new tank system.

Table 2. Reinforced Concrete Tank with Internal Secondary Containment Liner (100 feet by 175 feet)*

Cost Estimate

Item	Quantity	Unit	Unit Cost	cost
Site Prep				
Clear & Grub				
175' x 250'	1	ac	3,000.00	3,000.00
Strip & Level				
120 x 200 x 1' x 1/27	890	cy	3.50	3,115.00
Site Prep Subtotal				6,115.00
Tank				
Reinforced Concrete				
Floor (14")	867	cy	175.00	151,725.00
Walls (14")	262	cy	250.00	65,500.00
Elevated Walk/, (1/2 way around)	28	cy	250.00	7,000.00
Unreinforced Concrete				
Work Slab	130	cy	70.00	9,100.00
Handrai1	566	lf	44.00	24,900.00
Stair	1	ls	2,450.00	2,450.00
Tank Subtotal				$260,675.00
Liner System				
Bottom Liner (30 mil)	23,550	sf	1.30	30,615.00
Geonet/Geotexti1e	5,500	sf	0.22	1,210.00
Top Liner (100 mil)	23,550	sf	2.65	62,408.00
Battens	550	lf	25.00	13,750.00
Sand	300	cy	20.00	6,000.00
Subtotal Liner				$113,983.00
	TOTAL REINFORCED TANK			$380,773.00

* Total volume working storage and dead storage = 1,100,000 gallons.

Source: JEA, 1985.

SECTION III. DESIGN CONCEPTS

SECTION III
DESIGN CONCEPTS

GENERAL

Establishment of preliminary design concepts for the new surge tank system requires determining required working storage volume considering potential future flows, evaluating alternative internal protective liner systems, establishing pond influent and effluent flow rates, and determining required ancillary facilities.

Early in the system evaluation, the potential for major spills of concentrated solutions in the IWWTP service area was noted. Even with dampening of the chemical spills through mixing with the dead space dilution volume in the surge tank, these uncontrolled spills could render serious problems to the downstream treatment units. It is therefore desirable to provide a new surge tank system that would allow containment of the spill and provide a method of gradually releasing the contained volume downstream while maintaining total function of the new surge tank. This can only be accomplished by providing parallel new surge tanks with a valving system that will allow for isolation of each tank.

Surge pond volume (working storage and dead storage) must be sited based on existing flow and potential future flows. Influent industrial wastewater treatment plant flow records for the past 3+ years have been reviewed to evaluate the surge pond size requirements. Figure 4 presents a histogram of the daily flow rate between January 1982 and July 1985. A statistical analysis of these data shows that the mean daily flow rate for the period was 766,000 gallons per day (gpd) based on 1,369 data points. The standard deviation was calculated as 237,000 gpd. The resulting frequency distribution appears to conform to a normal distribution; however, it is skewed slightly to the high side. Using the properties of a normally distributed curve, daily flow rates should have a 95 percent probability of being between 292,000 and 1,240,000 gpd, and a 68 percent probability of being between 529,000 and 1,003,000 gpd.

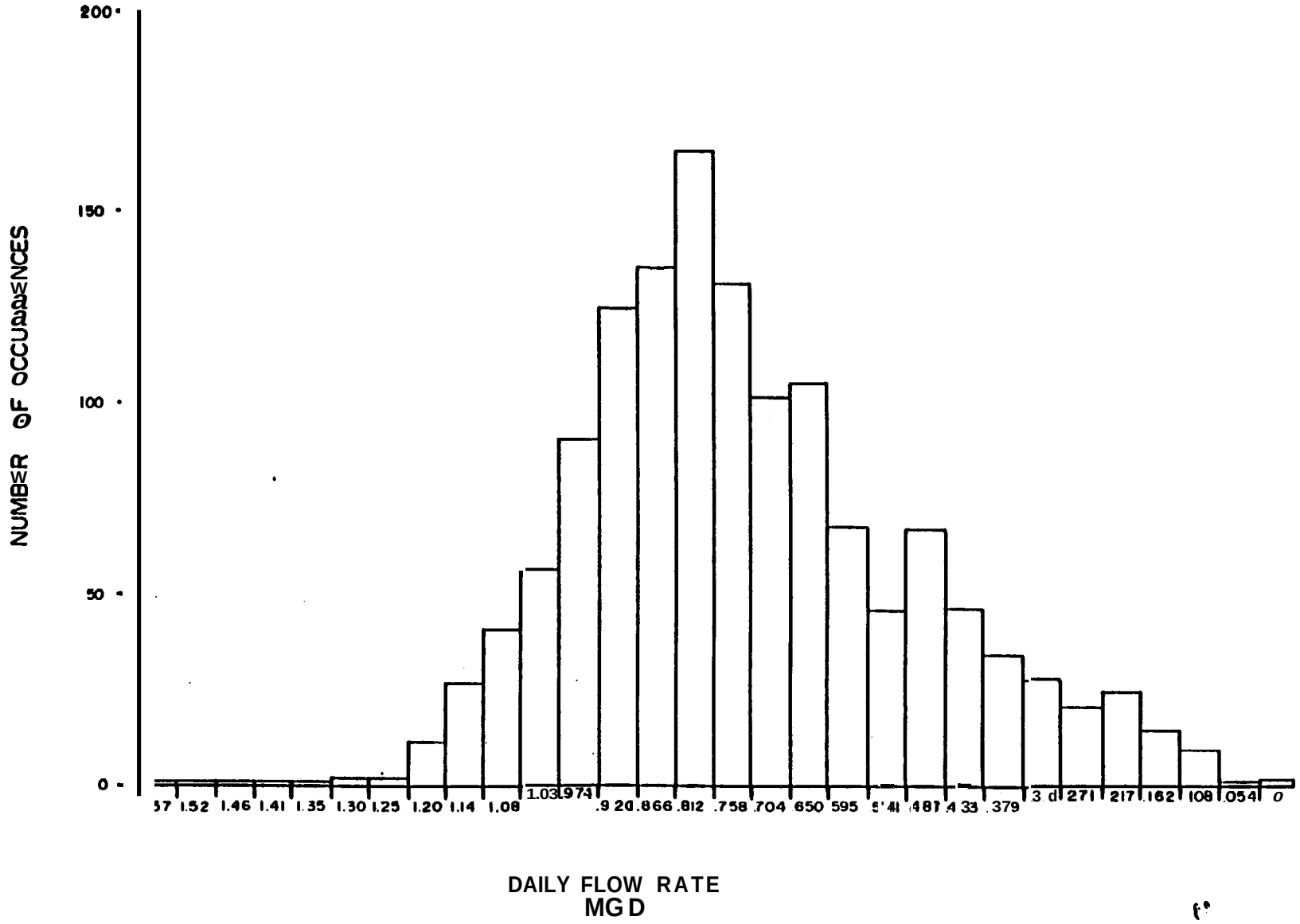

FIGURE 4. HISTOGRAM OF DAILY FLOW IWWTP-NASPENS, JANUARY 1982–JULY 1985

The existing surge pond has a working storage volume of approximately 500,000 gallons. Dead storage depends on the minimum level required to float the mixers that are located in the pond. Currently, dead storage is about 610,000 gallons. Potential future flows into the IWWTP include 150,000 gpd of contaminated groundwater.

The initial IWWTP design criteria provided for 1-day detention time in the surge pond. Since the construction of the original design, the design flow of the plant- has been increased to 2.0 MGD (million gallons per day) without an equivalent increase in surge pond volume. From a process control standpoint it is desirable to have the ability at a minimum to hold 100 percent of the average daily flow (ADF) on top of minimum dead space storage. In addition to process considerations, available site area will contribute to the final decision regarding new surge tank sizing. The desirable new surge tank volume is 2,000,000 gallons based on the 1-day detention time criterion. An alternately acceptable volume would be the projected future ADF (916,000 gpd) plus dead storage required for equipment.

Currently, if a major spill of plating material occurs in the Naval Air Rework Facility (NARF), a potential plant overload could occur. This is particularly possible if a major cyanide spill occurs. For this reason, it is desirable to maintain a standby tank in which to route major spills. Following cessation of the spill event, the diversion would be closed and normal operation resumed. The heavily cdntaminated spill could then be pumped to the treatment system at an acceptable rate, which will be determined during final design. It is also desirable to have a standby surge tank so the main service tank can be periodically drawn down and inspected. The standby tank should be constructed with the required operating surge volume so that it can serve as the primary tank should extensive maintenance of the main tank be required. The recommended arrangement, therefore, is two adjacent tanks each with the full required surge volume.

The most cost-efficient layout of tanks w th equal vo ume is to provide two rectangular tanks sharing a common wall. The combined outside configuration of the unit should be approximately square. This arrangement minimizes the construction material required for a given volume and wall height. From a construction standpoint it is desirable to limit total side wall height to 14 feet above the slab.

Two floating mixers will be required to provide for mixing of the tank contents to promote damping of chemical composition swings. The necessity of the mixers also requires that a minimum of 4 feet of water be maintained within the surge tank to float the mixers.

The available site is located west of the surge pond. Physical constraints result in the main compartment(s) in the surge tank having the gross inside dimensions of 100 x 200 feet. The total volume at 11 feet of liquid depth is 1,650,000 gallons (see Figure 5). With a minimum water level of 4 feet, approximately 600,000 gallons of dead space and 1,047,000 gallons of working storage over a 7-foot range in stage are provided. A minimum of 2 feet of freeboard will be provided so that total wall height is approximately 13 feet. To provide for a total volume of 2,000,000 gallons, a total depth of 15.51 feet would be required.

The additional cost of providing 2,000,000 gallons of surge storage over providing approximately 1,650,000 gallons is thought to exceed any cost benefit associated with reduced pumping rates or increased operation flexibility. Provision of 1,050,000 gallons of working storage with 600,000 gallons of dead storage per tank is therefore recommended based on site limitation and construction constraints. This recommendation is consistant with the Alternate Sizing methodology.

A computer analysis of the proposed surge tank operation was performed for the 3-year flow data previously discussed. This analysis indicates that with a peak pumping rate out of the .surge tank of 1,215 gallons per minute (gpm) no uncontrolled overflow to downstream processes would

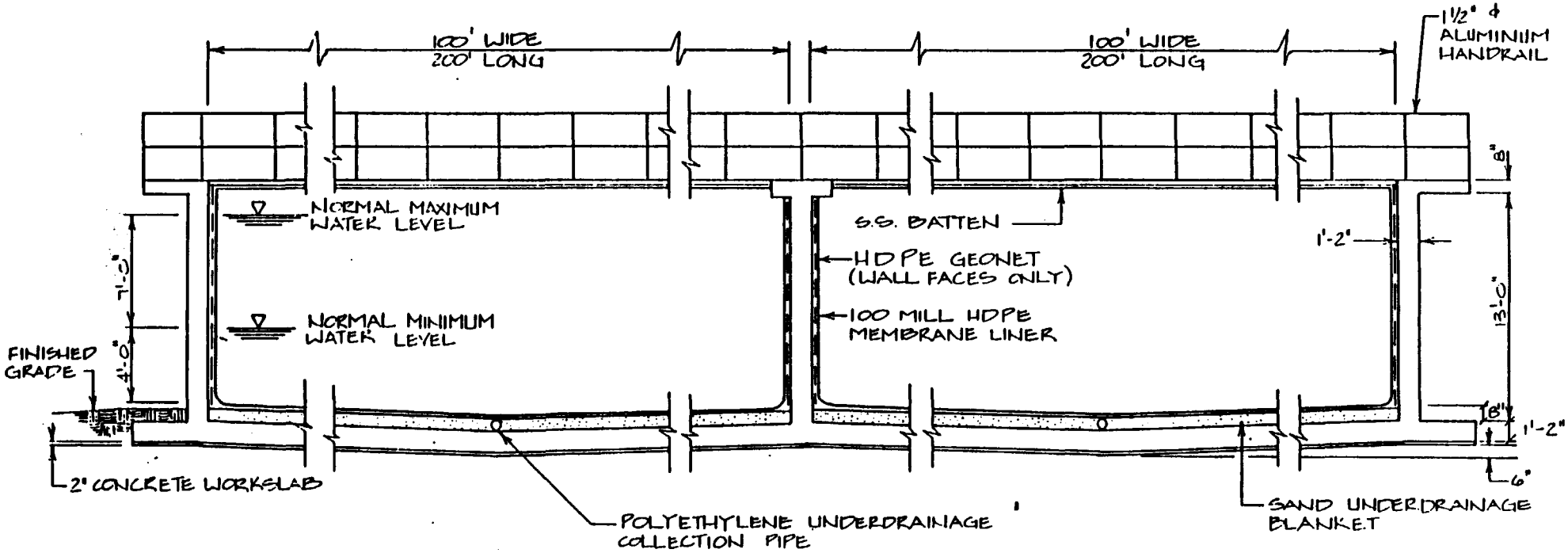

FIGURE 5. CONCEPTUAL SURGE TANK ILLUSTRATIVE SECTION (HDPE LINER SYSTEM)

have occurred with an additional 650,000 gpd of inflow process water. With only the 150,000 gpd future groundwater flow, in addition to recorded flows, a peak outflow rate of 868 gpm was required for a working volume of 1,050,000 gallons.

SURGE TANK LINER/COATING SYSTEM

To protect the proposed concrete surge tank from attack by acids and other corrosive compounds potentially in the wastestream, a liner or coating system must be provided. A preliminary investigation of the feasibility of using a FML system indicated that HDPE could be considered potentially suitable for this service application; therefore, a testing program was developed. As part of this testing program, HDPE liner samples are presently immersed onsite (in the existing surge pond) and their weight change as a function of immersion time is being monitored. The weight change data obtained over the first 41 days of immersion show that the samples have undergone a significant increase in weight. Only after the weight gain stabilizes are the samples to be removed for physical testing, and then conclusions may be reached regarding the suitability of HDPE for this application.

As an alternative to the liner system, the use of protective coatings was considered also. Protective coating manufacturers were contacted and their recommendations for this application were obtained based on the chemical analyses of the influent wastewater contained in the "Pensacola Naval Air Station Wastewater Treatment Plant" report prepared by JEA and G&M (1984), and an assumed "worst-case" chemical solution. Based on the manufacturers' recommendations, two types of protective coating systems are considered to be potentially suitable for this application. One is an amine-cured coal tar epoxy system and the other is a vinyl ester system. Prior to making a decision as to whether or not to use either of these two coating systems, samples

should be subjected to onsite immersion to obtain additional supportive data. These samples should be immersed as soon as possible and left in place until the final design engineer can collect the samples and analyze the coating performance.

Comparative cost estimates for the three potentially su table surge tank liner/coating systems are presented in Table 3 for the final tank configuration. Since additional test data need to be obtained before a specific lining/coating system recommendation can be made, $355,000 should be allocated for the surge tank liner/coating system for conceptual design budgeting purposes.

Final design may result in modification of these criterion.

Figure 6 presents the proposed site layout for the new surge tank and ancillary facilities. Project components include:

a) New reinforced concrete surge tank system with two compartments having a total volume of 1,650,000 gallons each, each compartment equipped with two cable-stayed floating mixers.

b) New surye tank liner/coating system. (HDPE liner was evaluated as part of this study. A liner leakage detection system will be required if an HDPE liner is used.)

c) New surge tank influent pump station, piping, valves, and control equipment.

d) New surge tank effluent pump station, piping, valves, and control system.

e) Overflow piping.

Table 3. Surge Tank Liner/Coating Systems

Item	Quantity	Unit	Unit Cost	cost
	Cost Estimate			
HDPE Liner System				
100-mil HDPE Liner	56,800	sf	2.65	$150,520
Geonet/Geotextile	19,200	sf	0.40	7,680
Battens	1,200	lf	25.00	30,000
Sand	1,000	cy	20.00	20,000
Coal Tar Epoxy	56,800	sf	2.05	116,440
Underdrain	450	lf	17.25	7,763
Underdrain Lift Station	1	ls	21,700.00	21,700
			System Total	$354,103
Amine-Cured Coal Tar Epoxy Coating System				
Brush Off Blast	56,800	sf	1.00	56,800
Primer/Sealer	56,800	sf	0.47	26,696
Amine-Cured Coal Tar Epoxy Topcoats	56,800	sf	1.04	59.072
			System Total	$142,568
Vinyl Ester Coating System				
Brush Off Blast	56,800	sf	1.00	56,800
Epoxy Filler/Sealer	56,800	sf	1.62	92,016
Vinyl Ester Topcoats	56,800	sf	3.63	206,184
			System Total	$ 355,000

Source: JEA, 1986.

f) Reroute existing overflow/bypass lines from existing clariflocculators to discharge into new surge tank influent pump station.

A more detailed discussion follows:

Reinforced Concrete Surge Tank

The new surge tank will be approximately 200 feet square with two internal compartments separated by an interior wall. Each compartment will have a dead space volume of 600,000 gallons and a usable working volume of 1,050,000 gallons. Approximate dimensions of each compartment are 100 feet wide by 200 feet long with a maximum liquid depth of 11 feet. Wall height will be 11 feet plus 2 feet of freeboard plus the thickness of the drainage blanket, if provided.

The structure will consist of 14-inch thick reinforced concrete (to be verified in the 35 percent design), a continuous walkway on top of all tank walls (perimeter and dividing), safety railing along the walkway, and an integrally constructed surge tank effluent pump station. Appurtenant piping and valves will be provided to allow selective use of one compartment at a time.

Mechanical

a) Two, 15-horsepower floating mixers will be provided for each compartment. Placement and removal of these mixers will be by portable crane.

b) The surge tank effluent pump station will contain two variable speed drive vertical pumps with TEFC motors. The effluent piping system will connect the surge tank effluent pump station to existing Chemical Mix Tanks 1 and 2 Pump selection and effluent pipe siting will be made to allow a flow of 765 gallons per minute

(gpm) to Chemical Mix Tank 1, and 875 gpm to Chemical Mix Tank 2. Pump capacity at 100 percent speed would be 1,640 gpm to provide the respective flow to each mix tank simultaneously. Bearing flushing water lines will be required.

c) The surge tank influent pump station must be capable of passing instantaneous peak flows from the primary clarifier to the surge tank. Data in the previous reports indicate that this instantaneous flow rate is 2,100 gpm; therefore, the new pump station will include two, 2,100 gpm submersible pumps operated in a lead/lag arrangement.

- Piping

a) Surge tank influent piping will be 14-inch DIP, cement-lined, epoxy-coated.

b) Surge tank effluent piping will be 12-inch DIP, cement-lined, epoxy-coated.

c) All new piping associated with the new surge tank construction should be designed to meet hazardous waste secondary containment requirements. Currently, final definitions from EPA regarding the necessity of containment for in-plant piping is lacking. It is assumed in the cost estimate that EPA will require a .piping leak protection/detection system as presented in Section V.

COST ESTIMATE

A tentative budget cost estimate to implement the described improvements is presented in Table 4. This estimate does not include any costs associated with closure of the existing impoundment. Total estimated construction cost is $2,460,000 in February 1986 dollars.

Table 4. Tentative Budget Cost Estimate (Page 1 of 4)

NAVFAC 11013/7 (1-78) Supersedes NAVDOCKS 2017 and 2017a

COST ESTIMATE

DATE PREPARED: 31 January 1986

SHEET 1 OF 4

ACTIVITY AND LOCATION: Naval Air Station, Pensacola, Florida

CONSTRUCTION CONTRACT NO: N62467-85-C-0267

IDENTIFICATION NUMBER:

ESTIMATED BY: Decker, Keough, and Hall

CATEGORY CODE NUMBER:

PROJECT TITLE: Industrial Wastewater Treatment Plant - Surge Basin Replacement

STATUS OF DESIGN: [ ] PED [ ] 30% [ ] 100% [ ] FINAL [X] Other (Specify): MPD

JOB ORDER NUMBER:

ITEM DESCRIPTION	QUANTITY NUMBER	QUANTITY UNIT	MATERIAL COST UNIT COST	MATERIAL COST TOTAL	LABOR COST UNIT COST	LABOR COST TOTAL	ENGINEERING ESTIMATE UNIT COST	ENGINEERING ESTIMATE TOTAL
SITE PREPARATION								
Clear and Grub	1.52	ac					3,000.	$ 4,560.
Strip and Level	4,135	cy					3.50	14,473.
SUBTOTAL								$ 19,033.
SURGE TANK								
Reinforced Concrete - Floor	2,445	cy					175.	($427,875.
Walls	800	cy					250.	200.000.
Walkway	104	cy					250.	26,000.
Stair Slab	1	cy					175.	175.
Unrefnforced Concrete - Work Slab	278	cy					70.	19,460.
Handrail	2,076	lf					44.	91,344.
Liner System	1	ls					355,000.	355,000.
Stair	1	ls					2,450.	2,450.
Pump Supports	1	ls					1,900.	1,900.
Grating	1	ls					1,825.	1,825.
SUBTOTAL								$1,126,029.

S/N 0105-LF-010-1335

Table 4. Tentative Budget Cost Estimate (Page 2 of 4)

NAVFAC 11013/7 (1-78) Supersedes NAVDOCKS 2417 and 2417A

COST ESTIMATE

DATE PREPARED: 31 January 1986

SHEET 2 OF 4

ACTIVITY AND LOCATION: Naval Air Station, Pensacola, Florida

CONSTRUCTION CONTRACT NO: N62467-85-C-0267

IDENTIFICATION NUMBER:

ESTIMATED BY: Decker, Keough, and Hall

CATEGORY CODE NUMBER:

PROJECT TITLE: Industrial Wastewater Treatment Plant - Surge Basin Reolacement

STATUS OF DESIGN: [ ] PED [ ] 30% [ ] 100% [ ] FINAL [X] Other (Specify): MPD

JOB ORDER NUMBER:

ITEM DESCRIPTION	QUANTITY NUMBER	QUANTITY UNIT	MATERIAL COST UNIT COST	MATERIAL COST TOTAL	LABOR COST UNIT COST	LABOR COST TOTAL	ENGINEERING ESTIMATE UNIT COST	ENGINEERING ESTIMATE 10141
INFLUENT PUMP STATION								
Reinforced Concrete - Floor	25	cy					175.	$ 4,375.
Mal1s	38	cy					250.	9,500.
Unreinforced Concrete - Work Slab	3	cy					70.	210.
Interior Coating	812	sf					6.25	5,075.
Pump Supports	1	ls					2,950.	2,950.
Grating	1	ls					4,425.	4,425.
SUBTOTAL								$ 26,535.
PUMPS								
Influent Pumps	2	ea					144,000.	$ 88,000.
Effluent Pumps	2	ea					37,500.	75,000.
SUBTOTAL								$163,000.

S/N 0105-LF-010-1335

Table 4. Tentative Budget Cost Estimate (Page 3 of 4)

NAVFAC 11013/7 (1-78) NAVDOCKS 2417 and 2417A

COST ESTIMATE

DATE PREPARED 31 January 1986

SHEET 3 OF 4

ACTIVITY AND LOCATION: Naval Air Station, Pensacola, Florida

CONSTRUCTION CONTRACT NO: N62467-85-C-0267

IDENTIFICATION NUMBER

ESTIMATED BY: Decker, Keough, and Hall

CATEGORY CODE NUMBER

PROJECT TITLE: Basin Replacement

ITEM DESCRIPTION	QUANTITY NUMBER	QUANTITY UNIT	MATERIAL COST UNIT COST	MATERIAL COST 10141	LABOR COST UNIT COST	LABOR COST TOTAL	ENGINEERING ESTIMATE UNIT COST	ENGINEERING ESTIMATE TOTAL
PIPING AND VALVES								
Tank Influent	1	ls					75,300.	$ 75,300.
Tank Effluent	1	ls					49,200.	49,200.
Tank Internal	1	ls					17,300.	17,300.
Tank Overflow	1	ls					15,700.	15,700.
Piping Secondary Containment trench/pipe	1,100	lf					100.	110,000.
SUBTOTAL								$267,500.
SURGE TANK MIXERS	4	ea					9,650.	$ 38,600.
SITE RESTORATION								
Sodding	35,300	sf					0.40	$ 14,120.
ELECTRICAL	1	ls					50,000.	$ 50,000.
TOTAL								11,704,817.

S/N 0105-LF-010-1535

Table 4. Tentative Budget Cost Estimate (Page 4 of 4)

NAVFAC 11013/7 (1-78) Supersedes NAVDOCKS 2417 and 2417A

COST ESTIMATE

DATE PREPARED 31 January 1986

SHEET 4 OF 4

ACTIVITY AND LOCATION: Naval Air Station, Pensacola, Florida

CONSTRUCTION CONTRACT NO: N62467-85-C-0267

IDENTIFICATION NUMBER

ESTIMATED BY: Decker, Keough, and Hall

CATEGORY CODE NUMBER

PROJECT TITLE: Industrial Wastewater Treatment Plant - Surge Basin Replacement

STATUS OF DESIGN: [ ] PED [ ] 30% [ ] 100% [ ] FINAL [X] Other (Specify): MPD

JOB ORDER NUMBER

	QUANTITY	MATERIAL COST	LABOR COST	ENGINEERING ESTIMATE
TOTAL (carried from Page 3 of 4)				$1,704,817.
Contractor's Overhead and Profit at 30%				511,445.
Bond at 1%				17,048.
SUBTOTAL				$2,233,310.
Contingencies at 10%				$ 223,331.
EEC at Date of Estimate				$2,456,641.
Rounded EEC at Date of Estimate				$2,460,000.

S/N 0105-LF-010-1335

SECTION IV. IWWTP ADDITIONAL FLOW IMPACT EVALUATION

SECTION IV

IWWTP ADDITIONAL FLOW IMPACT EVALUATION

The IWWTP at Pensacola NAS must undergo modifications because of groundwater contamination around the plant and to meet state and federal effluent limitations. Other parts of this report discuss modifications to the industrial waste surge pond, activated sludge return pumps, and testing procedures to determine leaks from in-plant facilities.

This section will discuss potential effects and recommended potential modifications to the IWWTP due to approximately 150,000 gpd of contaminated groundwater to be pumped into the new industrial wastewater surge tank. Due to lack of information, only the hydraulic effects can be discussed, as the efficiency of the IWWTP to treat many of the chemical compounds is unknown. Long-term effluent data for the IWWTP are available only for those parameters listed in the Florida Department of Environmental Regulation (DER) permit and EPA National Pollutant Discharge Elimination System (NPDES) permit. Data on groundwater and influent and effluent wastewater chemical characteristics are shown in Tables 5 through 9. The effects of an additional 500,000 gpd of domestic wastewater prior to its mixing with the industrial wastewater stream are not part of this discussion.

The addition of 150,000 gpd of contaminated groundwater into the industrial waste surge tank means that the industrial waste grit chamber, bar screen, and primary clarifier will not be affected. Operational problems exist, however, with the existing industrial primary clarifier. The addition of an aircraft carrier at the NAS has resulted in significant discharges of oily bilge water. Also, the carrier uses saltwater for flushing; therefore, corrosion within the IWWTP has increased. Operators have stated that with the increase of oil from the carrier and other sources, the waste oil storage tanks from the industrial primary clarifier are not large enough.

Table 5. Metal Analyses of Influent Industrial Wastewater and Groundwater

Metals	Influent Wastewater*	Groundwater*
Aluminum	0.17	2.1
Antimony	<0.05	<0.05
Arsenic	<0.2	<0.2
Barium	0.042	0.073
Beryllium	<0.001	<0.001
Boron	0.27	0.13
Cadmium	0.065	<0.002
Calcium	7.2	100
Chromium	5.1	0.04
Cobalt	<0.01	<0.01
Copper	0.05	<0.01
Iron	1.0	1.8
Lead	<0.05	0.26
Lithium	<0.03	<0.03
Magnesium	7.1	11
Manganese	0.04	0.17
Molybdenum	<0.02	<0.02
Nickel	1.5	0.03
Selenium	<0.2	<0.2
Silicon	2.2	8.0
Silver	<0.01	<0.01
Sodium	97	150
Strontium	0.67	0.27
Thallium	<0.03	<0.03
Tin	<0.02	<0.02
Titanium	<0.003	<0.003
Vanadium	<0.01	<0.01
Zinc	0.32	0.04

* Concentration units are mg/liter (ppm)

Source: G&M, 1984.

Table 6. Priority Pollutant Analyses of Influent Industrial Wastewater and Groundwater (page 1 of 3)

Analyses	Parameter	Concentration (ppb)
Volatile Organic Analysis		
Influent Industrial Wastewater	Methylene Chloride	59,000
	Tetrachloroethylene	<2,000*
	Toluene	28,000
	1,1,1-Trichloroethane	<2,000*
Groundwater	Benzene	<10†
	Chloroethane	79
	Chloroform	<10†
	1,1-Dichloroethane	520
	1,1-Dichloroethylene	<10†
	Ethyl Benzene	<10†
	Methylene Chloride	13
	Tetrachloroethylene	<10†
	Toluene	140
	Trans-1,2-Dichloroethylene	14
	1,1,1-Trichloroethane	79
	Trichloroethylene	21
Volatile Organic Analysis travel Blank		
Influent Industrial Wastewater	Chloroform	<10†
	Methylene Chloride	<10†
Groundwater	Chloroform	<10†
	Methylene Chloride	<10†
Acid Extractable Organics		
Influent Industrial Wastewater	Phenol	17,000
Groundwater	2-Chlorophenol	33
	2,4-Dichlorophenol	<10†
	2,4-Dimethylphenol (M-Xylenol)	730
	Pentachlorophenol	<10†
	Phenol	1000

Table 6. Priority Pollutant Analyses of Influent Industrial Wastewater and Groundwater (page 2 of 3)

Analyses	Parameter	Concentration (ppb)
Base-Neutral Extractable Organics		
Influent Industrial Wastewater	Bis(2-Ethylhexyl)Pthalate	<100**
	Butyl Benzylpthalate	<100**
	1,2-Dichlorobenzene	300
	1,3-Dichlorobenzene	<100**
	1,4-Dichlorobenzene	<100**
	Fluorene	<100**
	Napthalene	5800
	Phenanthrene	150
	Pyrene	<100**
Groundwater	1,2-Dichlorobenzene	470
	1,3-Dichlorobenzene	41
	1,4-Dichlorobenzene	77
	Fluorene	<10†
	Naphthalene	380
	Phenanthrene	<10†
Pesticides and PCBs		
Influent Industrial Wastewater	PCB-(Aroclor)-1242	1.1
Groundwater	None Detected	
Additional Organic Pollutants		
Influent Industrial Wastewater	Undecane	6300
	Dodecane	5800
	Tridecane	4400
	Methyl Propyl Benzene	4400
	Dimethyl Ethyl Benzene	4200
	Hexadecane	3300
	Butoxy Ethanol	2900
	Dimethyl Ethyl Benzene	2200
	Eicosane	2100
	Hexatriacontane	1900

Table 6. Priority Pollutant Analyses of Influent Industrial Wastewater and Groundwater (page 3 of 3)

Analyses	Parameter	Concentration (ppb)
Additional Organic Pollutants (continued)		
Influent Industrial Wastewater	2-Propanol	<2,000*
	1,1,2-Trichloro-1,2,2-Trifluoroethane	6,800
Groundwater	Methyl Ethyl Ketone	640
	0-Methyl Phenol	390
	Trimethyl Benzene	390
	Acetone	250
	Alcohol	210
	Methyl Dihydroindene	150
	4-Methyl-2-Pentanone	84
	Tetramethyl Benzene	71
	Unknown	44
	Methyl Ethyl Phenol	40
	Methyl Naphthalene	29
	Tetramethyl Butyl Phenol	28
	Hydroxy Methyl Pentanone	27
	Dimethyl Ethyl Phenol	24
	Methyl Mercaptan	15

* Detected but at a level less than 2 ppm (parts per million).
t Detected but at a level less than 10 ppb (parts per billion).
** Detected but at a level less than 100 ppb.

Source: G&M, 1984.

Table 7. Chemical Analysis of Wastewater Treatment Plant Effluent (page 1 of 13)

	Flow (MGD)	BOD (mg/l)	COD (mg/l)	TSS (mg/l)	Cd (mg/l)	Cr (mg/l)	cu (mg/l)	Fe (mg/l)	Pb (mg/l)	Ni (mg/l)	Zn (mg/l)	Cyanide (mg/l)	Phenols (mg/l)
Limits													
Groundwater	-	-	-	-	0.01	0.05	1.0	0.30	0.05	-	5.0	free from	free from[1]
Class III	-	-	-	-	0.005	0.05	0.015	0.30	0.05	0.1	1.0	0.005	0.001
1983													
4/1	2.20												
4/2	0.72												
4/3	1.90												
4/4	1.93												
4/5	2.12	4.8	179	24	0.004	0.04	0.010	0.19	0.04	2.1	0.24	<0.005	0.003
4/6	2.05												
4/7	3.53	10.5	115	30	0.002	0.03	0.013	0.21	0.03	2.4	0.19	<0.005	0.002
4/8	3.04												
4/9	4.43												
4/10	2.32												
4/11	2.43												
4/12	3.30	8.6	68	26	0.002	0.03	0.008	0.21	0.02	1.9	0.08	<0.008	0.002
4/13	2.45												
4/14	3.40	9.4	48.5	13.6	0.002	0.04	0.008	0.18	0.04	1.9	0.08	<0.005	0.004
4/15	3.85												
4/16	3.13												
4/17	1.63												
4/18	3.25												
4/19	3.90	11.6	75	20	0.001	0.04	0.010	0.12	0.05	2.5	0.06	<0.005	0.002
4/20	3.65												
4/21	3.59	15.9	67.5	25	0.002	0.02	0.011	0.17	0.03	2.4	0.19	<0.005	0.001
4/22	2.93												
4/23	3.76												
4/24	3.77											4	
4/25	3.66												
4/26	3.32	9.4	82.7	44.4	0.001	0.03	0.008	0.11	0.02	2.1	0.14	<0.005	0.002
4/27	3.508												
4/28	2.99	12.6	63	18.8	0.003	0.02	0.010	0.21	0.02	2.6	0.12	<0.005	0.001
4/29	2.84												
4/30	2.96												

(Continued)

Table 7. Chemical Analysis of Wastewater Treatment Plant Effluent (page 2 of 13)

	Flow (MGD)	BOD (mg/l)	COD (mg/l)	TSS (mg/l)	Cd (mg/l)	Cr (mg/l)	cu (mg/l)	Fe (mg/l)	Pb (mg/l)	Ni (mg/l)	Zn (mg/l)	Cyanide (mg/l)	Phenols (mg/l)
Limits													
Groundwater	-	-	-		0.01	0.05	1.0	0.30	0.05	-	5.0	free from	free from[1]
Class III	-	-	-	-	0.005	0.05	0.015	0.30	0.05	0.1	1.0	0.005	0.001
1983													
5/1	2.95												
5/2	2.59												
5/3	2.60	5.9	71	23	0.003	0.04	0.01	0.18	0.03	2.80	0.14	<0.005	0.004
5/4	3.08												
5/5	3.05	14.2	68	32	0.003	0.03	0.01	0.25	0.02	2.20	0.06	<0.005	0.008
5/6	3.40												
5/7	2.58												
5/8	2.61												
5/9	3.36												
5/10	3.74	9.5	51	19	0.003	0.03	0.01	0.22	0.03	2.45	0.22	<0.005	0.005
5/11	3.69												
5/12	1.669	5.3	46	25	0.003	0.04	0.008	0.24	0.03	2.60	0.03	<0.005	<0.001
5/13	1.438												
5/14	1.84												
5/15	0.865												
5/16	2.70												
5/17	2.28	6.5	46	33	0.004	0.05	0.01	0.17	0.01	2.60	0.04	<0.005	0.003
5/18	2.83												
5/19	3.74	7.9	28	22	0.002	0.03	0.01	0.19	0.01	2.8	0.19	<0.005	0.002
5/20	3.35												
5/21	3.80												
5/22	3.17												
5/23	3.60												
5/24	2.83	6.5	94	29	0.003	0.03	0.011	0.20	0.02	2.65	0.14	<0.005	0.005
5/25	3.10												
5/26	3.40	9.3	87	32	0.003	0.04	0.011	0.18	0.03	2.90	0.08	<0.005	0.005
5/27	3.17												
5/28	2.88												
5/29	2.96												
5/30	2.28												
5/31	3.28	7.7	159	47	0.002	0.03	0.01	0.11	0.01	4.65	0.03	<0.005	0.010

(Continued)

Table 7. Chemical Analysis of Wastewater Treatment Plant Effluent (page 3 of 13)

	Flow (MGD)	BOD (mg/l)	COD (mg/l)	TSS (mg/l)	Cd (mg/l)	Cr (mg/l)	cu (mg/l)	Fe (mg/l)	Pb (mg/l)	Ni (mg/l)	Zn (mg/l)	Cyanide (mg/l)	Phenols (mg/l)
Limits													
Groundwater	-	-	-	-	0.01	0.05	1.0	0.30	0.05	-	5.0	free from	free from[1]
Class III	-	-	-	-	0.005	0.05	0.015	0.30	0.05	0.1	1.0	0.005	0.001
1983													
6/1	3.38												
6/2	3.69	12.5	114	21.2	0.003	0.04	0.010	0.19	0.04	2.5	0.07	<0.005	<0.01
6/3	1.47												
6/4	1.67												
6/5	2.54												
6/6	2.69												
6/7	2.88	9.3	56.5	27.2	0.004	0.03	0.010	0.14	0.03	1.84	0.20	(0.005	<0.01
6/8	3.09												
6/9	2.71	14.6	46.5	28.2	0.004	0.03	0.008	0.25	0.03	2.15	0.20	<0.005	<0.01
6/10	2.87												
6/11	2.73												
6/12	2.51												
6/13	2.81												
6/14	2.76	11.7	23	14.6	0.002	0.03	0.010	0.21	0.03	2.4	0.17	<0.005	<0.01
6/15	3.02												
6/16	3.03	9.5	59	9.8	0.002	0.04	0.011	0.17	0.03	2.6	0.09	<0.005	<0.01
6/17	3.05												
6/18	3.57												
6/19	3.53												
6/20	4.03												
6/21	3.78	10.6	64.5	32.4	0.005	0.04	0.010	0.22	0.05	2.4	0.12	<0.005	0.04
6/22	2.90												
6/23	3.05	9.7	70	30.4	0.003	0.05	0.010	0.20	0.03	2.4	0.25	<0.005	<0.01
6/24	3.66												
6/25	3.58												
6/26	3.14												
6/27	4.03												
6/28	3.23	14.3	78	35	0.003	0.04	0.010	0.28	0.04	2.85	0.08	<0.005	<0.01
6/29	2.04												
6/30	3.21	14.7	77	17.4	0.002	0.045	0.013	0.29	0.04	2.5	0.43	(0.005	0.003

(Continued)

Table 7. Chemical Analysis of Wastewater Treatment Plant Effluent (page 4 of 13)

	Flow (MGD)	BOD (mg/l)	COD (mg/l)	TSS (mg/l)	Cd (mg/l)	Cr (mg/l)	cu (mg/l)	Fe (mg/l)	Pb (mg/l)	Ni (mg/l)	Zn (mg/l)	Cyanide (mg/l)	Phenols (mg/l)
Limits													
Groundwater	-	-	-		0.01	0.05	1.0	0.30	0.05	-	5.0	free from	free from[1]
Class III	-	-	-	-	0.005	0.05	0.015	0.30	0.05	0.1	1.0	0.005	0.001
1983													
7/1	3.22												
7/2	3.12												
7/3	2.61												
7/4	2.42												
7/5	3.14	14.4		24.6									
7/6	1.36		73		0.003	0.027	0.010	0.16	0.03	2.25		0.000	
7/7													
7/8													
7/9	2.02												
7/10	2.78												
7/11	3.87												
7/12	3.79	16.8	98	10.0	0.003	0.040	0.013	0.07	0.04	2.70	0.01	0.000	0.004
7/13	3.131												
7/14	2.14	15.3	101	40.0	0.001	0.030	0.011	0.16	0.03	2.10	0.018	0.000	0.001
7/15	1.855												
7/16	2.85												
7/17	2.035												
7/18	2.39												
7/19	2.39	13.8	42	27.2	0.005	0.045	0.010	0.10	0.02	2.24	0.016	0.000	0.001
7/20	2.48												
7/21	1.427	19.2	83	29.2	0.004	0.04	0.010	0.24	0.04	2.6	0.17	0.000	0.016
7/22	1.808												
7/23	1.901												
7/24	2.08												
7/25	2.94												
7/26	2.89	19.6	81	26.2	0.003	0.05	0.010	0.28	0.04	2.8	0.24	0.000	0.009
7/27													
7/28													
7/29													
7/30													

(Continued)

Table 7. Chemical Analysis of Wastewater Treatment Plant Effluent (page 5 of 13)

	Flow (MGD)	BOD (mg/l)	COD (mg/l)	TSS (mg/l)	Cd (mg/l)	Cr (mg/l)	Cu (mg/l)	Fe (mg/l)	Pb (mg/l)	Ni (mg/l)	Zn (mg/l)	Cyanide (mg/l)	Phenols (mg/l)
Limits													
Groundwater	-	-	-	-	0.01	0.05	1.0	0.30	0.05	-	5.0	free from	free from[1]
Class III	-	-	-	-	0.005	0.05	0.015	0.30	0.05	0.1	1.0	0.005	0.001
7/31													
1983													
9/1													
9/2													
9/3													
9/4													
9/5	2.60												
9/6	2.91	9.3	96	57.8	0.002	0.04	0.01	0.19	0.02	2.7	0.39	0.000	0.006
9/7	3.45												
9/8	2.74	10.8	75	30	0.003	0.03	0.013	0.03	0.02	2.65	0.23	0.000	0.005
9/9	2.46												
9/10	3.13												
9/11	3.092												
9/12	3.43												
9/13	3.40	8.5	123	32.8	0.004	0.04	0.01	0.26	0.03	2.9	0.60	0.000	0.008
9/14	3.70												
9/15	2.49	a.4	6	30.5	0.004	0.19	0.01	0.55	0.04	2.2	0.42	0.000	0.004
9/16	2.30												
9/17	3.32												
9/18	2.48												
9/19	2.33												
9/20	3.01	10.6	27	9.2	0.001	0.03	0.014	0.055	0.035	1.7	0.09	0.000	0.004
9/21	2.97												
9/22	1.67	10.4	12	10	0.001	0.03	0.011	0.23	0.03	2.3	0.25	0.054	0.010
9/23	2.44											0.000	
9/24	2.96												
9/25	2.97												
9/26	2.60												
9/27	2.74	10.1	81	18.4	0.001	0.05	0.013	0.18	0.01	2.2	0.04	0.000	0.009
9/28	1.77												
9/29	2.29	7.5	47	18.2	0.001	0.038	0.01	0.14	0.03	26	0.04	0.000	0.006

(Continued)

PenG&M2:HTB.19
5/8/86

Table 7. Chemical Analysis of Wastewater Treatment Plant Effluent (page 6 of 13)

	Flow (MGD)	BOD (mg/l)	COD (mg/l)	TSS (mg/l)	Cd (mg/l)	Cr (mg/l)	Cu (mg/l)	Fe (mg/l)	Pb (mg/l)	Ni (mg/l)	Zn (mg/l)	Cyanide (mg/l)	Phenols (mg/l)
Limits													
Groundwater	-	-	-	-	0.01	0.05	1.0	0.30	0.05	-	5.0	free from	free from[1]
Class III	-	-	-	-	0.005	0.05	0.015	0.30	0.05	0.1	1.0	0.005	0.001
9/30	2.04												
1983													
10/1	2.90												
10/2	2.90												
10/3	1.78												
10/4	1.95	11.6	81	12	0.004	0.03	0.01	0.19	0.03	2.2	0.07	0.000	0.008
10/5	2.83												
10/6	3.14	10.5	89	40	0.002	0.05	0.013	0.12	0.01	2.5	0.14	0.000	0.008
10/7	2.02												
10/8	2.10												
10/9	3.25												
19/10	2.19												
10/11	2.22	9.4	42	19	0.003	0.05	0.01	0.08	0.03	2.6	0.04	0.000	0.012
10/12	2.68												
10/13	2.21	9.0	59	26	0.004	0.04	0.013	0.16	0.01	2.25	0.05	0.000	0.006
10/14	2.67												
10/15	2.02												
10/16	1.38												
10/17	2.80												
10/18	2.64	8.5	39	13	0.002	0.01	0.008	0.15	0.01	2.65	0.16	0.000	0.004
10/19	2.65												
10/20	2.62	11.5	27	15	0.003	0.01	0.011	0.09	0.02	2.9	0.20	0.000	0.006
10/21	2.51												
10/22	1.01												
10/23	2.75												
10/24	2.72												
10/25	2.66	4.5	29	15	0.003	0.030	0.010	0.06	0.01	2.5	0.05	0.000	0.005
10/26	1.62												
10/27	2.646	9.3	30	7.2	0.001	0.034	0.014	0.06	0.01	2.6	0.10	0.000	0.007
10/28	2.51												
10/29	2.43												

(Continued)

PenG&M2:HTB.19
5/8/86

Table 7. Chemical Analysis of Wastewater Treatment Plant Effluent (page 7 of 13)

	Flow (MGD)	BOD (mg/l)	COD (mg/l)	TSS (mg/l)	Cd (mg/l)	Cr (mg/l)	cu (mg/l)	Fe (mg/l)	Pb (mg/l)	Ni (mg/l)	Zn (mg/l)	Cyanide (mg/l)	Phenols (mg/l)
Limits													
Groundwater	-	-	-	-	0.01	0.05	1.0	0.30	0.05	-	5.0	free from	free from[1]
Class III	-	-	-	-	0.005	0.05	0.015	0.30	0.05	0.1	1.0	0.005	0.001
10/30	2.25												
10/31	2.11												
1983													
11/1	2.54	9.7	38	16.2	0.003	0.02	0.01	0.13	0.04	2.2	0.22	(0.005	0.013
11/2	2.54												
11/3	2.61	11.9	43	33	0.004	0.05	0.01	0.29	0.02	2.7	0.052	<0.005	0.006
11/4	2.40												
11/5	2.42												
11/6	2.10												
11/7	2.12												
11/8	1.81	10.0	25	18.6	0.004	0.014	0.014	0.25	0.03	1.8	0.21	<0.005	0.008
11/9	1.47												
11/10	1.58	16.5	20	9.0	0.004	0.04	0.014	0.11	0.01	2.6	0.05	(0.005	0.001
11/11	2.55												
11/12	2.03												
11/13	1.56												
11/14	2.22												
11/15	2.58	11.5	28	16.2	0.003	0.04	0.01	0.19	0.02	2.4	0.06	<0.005	0.002
11/16	2.53												
11/17	2.56	9.5	16	17.6	0.005	0.05	0.01	0.22	0.02	2.2	0.14	<0.005	0.003
11/18	2.41												
11/19	2.39												
11/20	2.57												
11/21	2.52	9.5	49	37	0.004	0.04	0.013	0.28	0.02	2.75	0.08	<0.005	0.003
11/22	2.23	10.6	31	8.8	0.003	0.02	0.012	0.04	0.03	2.9	0.04	20.005	0.005
11/23	2.194												
11/24	2.17												
11/25													
11/26													
11/27													
11/28													

(Continued)

PenG&M2:HTB.19
5/8/86

Table 7. Chemical Analysis of Wastewater Treatment Plant Effluent (page 8 of 13)

	Flow (MGD)	BOD (mg/l)	COD (mg/l)	TSS (mg/l)	Cd (mg/l)	Cr (mg/l)	cu (mg/l)	Fe (mg/l)	Pb (mg/l)	Ni (mg/l)	Zn (mg/l)	Cyanide (mg/l)	Phenols (mg/l)
Limits													
Groundwater	-	-	-	-	0.01	0.05	1.0	0.30	0.05	-	5.0	free from	free from[1]
Class III	-	-	-	-	0.005	0.05	0.015	0.30	0.05	0.1	1.0	0.005	0.001
11/29	2.90	8.5	24	9.0	0.003	0.04	0.01	0.17	0.03	2.2	0.22	<0.005	0.003
11/30	1.16												
1983													
12/1	1.62	9.5	22	11	0.002	0.04	0.010	0.23	0.02	2.5	0.09	<0.005	0.001
12/2	2.36												
12/3	2.37												
12/4	2.25												
12/5	2.41												
12/6	2.27	12	31	23	0.003	0.04	0.013	0.18	0.02	2.15	0.09	<0.005	0.004
12/7	2.10												
12/8	1.29	15	41	12	0.003	0.035	0.010	0.12	0.02	2.2	0.10	<0.005	0.003
12/9	2.41												
12/10	2.85												
12/11	2.96												
12/12	2.71												
12/13	1.95	9.5	10	14	0.004	0.04	0.010	0.10	0.02	2.2	0.06	<0.005	0.004
12/14	2.44												
12/15	2.41	8.0	16	17	0.002	0.035	0.008	0.16	0.04		0.04	<0.005	0.007
12/16	1.37												
12/17	1.82												
12/18	2.096												
12/19	1.99												
12/20	2.18	10.0	43	23	0.004	0.04	0.010	0.10	0.02	2.8	0.06	<0.005	0.004
12/21	2.19												
12/22	2.23	6.5		17	0.003	0.035	0.010	0.12	0.01	2.6	0.05	<0.005	0.004
12/23	1.58												
12/24	1.47												
12/25	1.75												
12/26	0.94												
12/27	1.52	5.5		19									
12/28	2.42												

(Continued)

PenG&M2:HTB .19
5/8/86

Table 7. Chemical Analysis of Wastewater Treatment Plant Effluent (page 9 of 13)

	Flow (MGD)	BOD (mg/l)	COD (mg/l)	TSS (mg/l)	Cd (mg/l)	Cr (mg/l)	cu (mg/l)	Fe (mg/l)	Pb (mg/l)	Ni (mg/l)	Zn (mg/l)	Cyanide (mg/l)	Phenols (mg/l)
Limits													
Groundwater	-	-		-	0.01	0.05	1.0	0.30	0.05	-	5.0	free from	free from[1]
Class III	-	-	-	-	0.005	0.05	0.015	0.30	0.05	0.1	1.0	0.005	0.001
12/29	2.86	5.7	115	25	0.004	0.02	0.010	0.28	0.04	2.9	0.15	<0.005	0.003
12/30	2.59		59		0.004	0.04	0.010	0.21	0.03	2.8	0.19	<0.005	0.004
12/31	1.80												
1984													
1/1	1.46												
1/2	2.00												
1/3	2.72												
1/4	1.65	9	98	17	0.002	0.04	0.008	0.27	0.01	2.2	0.08	<0.005	0.004
1/5	2.49	8.5	102	18	0.016	0.065	0.04	0.25	0.02	2.8	0.09	<0.005	0.009
1/6	1.92												
1/7													
1/8	1.43												
1/9	2.28												
1/10	3.81	2.0	102	10	0.003	0.05	0.01	0.08	0.02	1.2	0.05	<0.005	0.005
1/11	3.44												
1/12	2.89	6.2	68	12	0.004	0.04	0.01	0.12	0.01	1.89	0.06	<0.005	0.007
1/13	2.20												
1/14	0.88												
1/15	1.84												
1/16	1.86												
1/17	1.56	4.5	92	25	0.003	0.04	0.014	0.08	0.05	1.43	0.04	<0.005	0.005
1/18	1.64												
1/19	2.35	5.5	102	14	0.004	0.03	0.01	0.15	0.01	1.78	0.04	<0.005	
1/20	2.62												
1/21	2.19												
1/22	2.09												
1/23	1.93												
1/24	2.21	6.0	59	26	0.004	0.03	0.010	0.08	0.01	1.71	0.03	<0.005	0.005
1/25	2.57												
1/26	2.55	5.5	42.5	19	0.004	0.05	0.010	0.130	0.01	1.38	0.03	<0.005	0.007
1/27	2.54												

(Continued)

Table 7. Chemical Analysis of Wastewater Treatment Plant Effluent (page 10 of 13)

	Flow (MGD)	BOD (mg/l)	COD (mg/l)	TSS (mg/l)	Cd (mg/l)	Cr (mg/l)	cu (mg/l)	Fe (mg/l)	Pb (mg/l)	Ni (mg/l)	Zn (mg/l)	Cyanide (mg/l)	Phenols (mg/l)
Limits													
Groundwater	-	-	-	-	0.01	0.05	1.0	0.30	0.05	-	5.0	free from	free from[1]
Class III	-	-	-	-	0.005	0.05	0.015	0.30	0.05	0.1	1.0	0.005	0.001
1/28	2.89												
1/29	1.97												
1/30	1.92												
1/31	2.30											<0.005	
1984													
2/1	1.90												
2/2	1.72	6.9	45	19.8	0.004	0.04	0.011	0.24	0.03	2.07	0.09	(0.005	0.009
2/3	1.83		53		0.004	0.04	0.011	0.24	0.03	1.73	0.09	(0.005	(0.001
2/4	1.06												
2/5	3.53												
2/6	2.14												
2/7	2.65	5.7	94	26								<0.005	
2/8	2.80												
2/9	3.001	9.9	37	13.8	0.005	0.031	0.015	0.30	0.03	0.70	0.05	(0.005	0.005
2/10	2.58	11.1			0.007	0.04.	0.008	0.22	0.04	0.87	0.05		0.013
2/11	1.95												
2/12	1.82												
2/13	1.81				0.012	0.21	0.01	0.37	0.04		0.08		
2/14	2.086		110	23.2	0.010	0.26	0.014	0.40	0.03	1.73	0.06	(0.005	0.012
2/15	1.239	6.8											
2/16	3.538	13	106	44.4	0.013.	0.65	0.014	0.74	0.03	2.40	0.13	(0.005	0.010
2/17	3.308												
2/18	2.523												
2/19	2.263												
2/20	1.849												
2/21	1.919	13	79	24	0.003	0.03	0.04	1.60	0.03	2.9	0.09	<0.005	0.008
2/22	2.166									2.6			
2/23	1.928	16	88	34	0.003	0.830	0.01	0.47	0.04		0.13	<0.005	0.008
2/24	1.494							0.11					
2/25	2.069												
2/26	1.966												

(Continued)

Table 7. Chemical Analysis of Wastewater Treatment Plant Effluent (page 11 of 13)

	Flow (MGD)	BOD (mg/l)	COD (mg/l)	TSS (mg/l)	Cd (mg/l)	Cr (mg/l)	cu (mg/l)	Fe (mg/l)	Pb (mg/l)	Ni (mg/l)	Zn (mg/l)	Cyanide (mg/l)	Phenols (mg/l)
Limits													
Groundwater	-	-	-	-	0.01	0.05	1.0	0.30	0.05	-	5.0	free from	free from[1]
Class III	-	-	-	-	0.005	0.05	0.015	0.30	0.05	0.1	1.0	0.005	0.001
2/27	2.118												
2/28	2.038		55	8.6						2.7		~0.005	0.005
2/29	3.50									2.6			
1984													
3/1	2.025	5.4	46	19	0.003	0.04	0.01	0.18	0.02		0.15	<0.005	0.005
3/2	2.148												
3/3	2.748												
3/4	1.205												
3/5	2.094												
3/6	2.85	5.2	51	20	0.004	0.035	0.01	0.22	0.02	1.3	0.20	<0.005	0.017
3/7	3.182												
3/8	2.944												
3/9	3.058	6.9	44	13.8	0.003	0.03	0.01	0.17	0.02	1.3	0.16	<0.005	0.008
3/10	1.782												
3/11	2.349												
3/12	2.618												
3/13	2.718	10.0	124	18.2	0.003	0.04	0.01	0.29	0.03	1.9	0.31	<0.005	0.006
3/14	2.44												
3/15	2.418												
3/16	2.33	7.2	85	44.4	0.003	0.025	0.01	0.16	0.01	1.4	0.12	<0.005	0.006
3/17	2.293												
3/18	2.193												
3/19	2.27												
3/20	2.475	6.1	104	23	0.004	0.02	0.01	0.14	0.01	1.6	0.12	~0.005	0.008
3/21	2.313												
3/22	2.099	4.7	73	23	0.002	0.04	0.01	0.17	0.01	0.53	0.08	<0.005	0.004
3/23	2.266												
3/24	2.383												
3/25	2.139												
3/26	1.679												
3/27	1.754												

(Continued)

PenG&M2:HTB.19
5/8/86

Table 7. Chemical Analysis of Wastewater Treatment Plant Effluent (page 12 of 13)

	Flow (MGD)	BOD (mg/l)	COD (mg/l)	TSS (mg/l)	Cd (mg/l)	Cr (mg/l)	cu (mg/l)	Fe (mg/l)	Pb (mg/l)	Ni (mg/l)	Zn (mg/l)	Cyanide (mg/l)	Phenols (mg/l)
Limits													
Groundwater	-	-	-	-	0.01	0.05	1.0	0.30	0.05	-	5.0	free from	free from[1]
Class III	-	-	-	-	0.005	0.05	0.015	0.30	0.05	0.1	1.0	0.005	0.001
3/28	2.108	6.5	98	20.8	0.003	0.03	0.01	0.20	0.03	0.53	0.21	<0.005	0.007
3/29	2.03	11.9	113	23	0.003	0.04	0.01	0.21	0.01	1.0	0.27	<0.005	0.009
3/30	1.511												
3/31	0.849												
1984													
4/1	1.357												
4/2	1.28												
4/3	2.025		61		0.004	0.03	0.011	0.12	0.02	2.6	0.08	<0.005	0.008
4/4	2.564	9.6		15.2							<0.005		
4/5	2.595	9.1	35	16.0	0.004	0.02	-0.010	0.20	0.03	1.3	0.14		0.010
4/6	2.807												
4/7	2.586												
4/8	0.908												
4/9	0.66												
4/10	0.363												
4/11		8.3		12	0.003	0.02	0.010	0.11	0.02		0.17		
4/12	0.627	7.1		22	0.004	0.02	0.010	0.24	0.02	0.01	0.06	0.009	0.010
4/13	1.014		120						0.01		0.007	0.017	
4/14	0.791		115								0.005		
4/15	0.764										0.005		
4/16	0.883								2.10		0.006		
4/17	0.786								0.26		<0.005	0.008	
4/18	0.847		115	25.4	0.002	0.02	0.008	0.19	0.01		0.05		
4/19	0.77	7.1		31.8	0.005	0.04	0.013	0.18	0.02		0.08		
4/20	0.771	8.0	117									0.006	
4/21	0.892												
4/22	1,463												
4/23	1.692												
4/24	2.198												
4/25	2.217	12.9	108	18.6	0.004	0.03	0.013	0.20	0.02	0.26	0.19	<0.005	
4/26	2.166	12.6	118	18.0	0.004	0.03	0.014	0.13	0.01	0.53	0.09	<0.005	0.008

(Continued)

Table 7. Chemical Analysis of Wastewater Treatment Plant Effluent (page 13 of 13)

	Flow (MGD)	BOD (mg/l)	COD (mg/l)	TSS (mg/l)	Cd (mg/l)	Cr (mg/l)	cu (mg/l)	Fe (mg/l)	Pb (mg/l)	Ni (mg/l)	Zn (mg/l)	Cyanide (mg/l)	Phenols (mg/l)
Limits													
Groundwater	-	-	-	-	0.01	0.05	1.0	0.30	0.05	-	5.0	free from	free from[1]
Class 111	-	-	-	-	0.005	0.05	0.015	0.30	0.05	0.1	1.0	0.005	0.001
4/27	2.063												
4/28	2.066												
4/29	2.28												
4/30	2.246												

[1] Florida Administrative Code 17-3.402 requires discharges to groundwater to be free from components in concentrations which are toxic, carcinogenic, etc. The Secretary of the Department decides if reported concentrations of such compounds are prohibited concentrations unless specific concentration levels have been adopted by the State Environmental Regulation Commission (17-3.402(3)).

Source:, U.S. Navy.

Table 8. Miscellaneous Chemical Analyses of Influent and Effluent for the Wastewater Treatment Plant

Parameter	INFLUENT (ppm) Domestic	INFLUENT (ppm) Industrial	EFFLUENT (Combined) PPM	EFFLUENT (Combined) Lbs./Day
5-Day BOD	85	415	8.4	154
Total Suspended Solids	79	25	14.2	260
Dissolved Oxygen	NA	NA	9.1	NA
Fecal Coliform	NA	NA	4 Colonies/100ml	NA
COD	244	1,262	55	1,006
Oil and Grease	NA	NA	3.8	69.5
Cyanide	NA	NA	0.00	0.00
Phenol	0.39	442	0.048	0.88
Detergent	NA	NA	0.26	4.76
TKN	17.3	5.85	2.2	40.3
Phosphate	10.6	3.5	1.41	25.8
Turbidity	47 JTU	327 JTU	10 JTU	NA
Copper	0.36	0.44	0.03	0.55
Cadmium	0.01	0.26	0.01	0.18
Chromium	2.42	28.4	0.02	0.37
Iron	0.69	1.68	0.15	2.75
Nickel	0.046	0.20	0.03	0.55
Lead	NA	NA	0.00	0.00
Zinc	0.19	0.57	0.06	1.1

Source: JEA, 1986.

Table 9. Miscellaneous Chemical Analyses of Priority Pollutants in Wastewater Treatment Plant Influent and Effluent

	Industrial Waste Influent	Final Clarifier Effluent		
	April 9, 1980	April 9, 1980	August 22, 1979	Detection Limit
Benzene, ppb	BDL	BDL	1.2	10
1,1,1-Trichloroethane, ppb	406.8	BDL	1.5	10
Chloroform, ppb	BDL	BDL	2.9	10
1,2-Dichlorobenzene, ppb	BDL	BDL	6.8	10
1,1-Dichloroethylene, ppb	BDL	BDL	0.7	10
2,4-Dimethylphenol, ppb	156.0	BDL	BDL	10
Methylene Chloride, ppb	20,000	76.4	12.0	10
Napthalene, ppb	909.0	BDL	BDL	10
Phenol*, ppb	45,000	37.0	0.6	25
Bis 2-Ethylhexyl Phthalate, ppb	66.0	BDL	57.0	10
Butyl Benzyl Phthalate, ppb	18.5	BDL	BDL	10
Anathracene and/or Phenathrene, ppb	130*	BDL	BDL	lo
Tetrachloroethylene, ppb	21.9	BDL	0.5	10
Toluene, ppb	275.3	BDL	4.9	10
Trichloroethylene, ppb	209.0	BDL	3.3	10
Ethylbenzene, ppb	BDL	BDL	0.4	10
Antimony, ppm	BDL	BDL	0.011	0.5
Arsenic, ppb	BDL	BDL	<0.005	0.01
Beryllium, ppn	BDL	BDL	<0.001	0.025
Cadmium, ppm	0.06	BDL	0.006	0.025
Chromium, ppm	2.18	BDL	0.033	0.1
Copper, ppm	BDL	BDL	0.010	0.1
Lead, ppm	BDL	BDL	0.001	0.5
Mercury, ppm	0.0003	BDL	<0.005	0.0002
Nickel, ppm	BDL	BDL	0.062	0.15
Selenium, ppm	BDL	BDL	~0.005	0.002
Silver, ppm	0.009	BDL	<0.001	0.06
Thallium, ppm	BDL	BDL	<0.05	0.05
Zinc, ppm	0.80	0.04	0.028	0.02
Cyanides, ppm	BDL	BDL	<0.005	0.01
Total Phenols**, ppm	64.0	0.127	--	0.01

* GC/MS analysis for phenols specifically.

** Distillation/Colorimetric analyses for total phenolic compound per Std. Med. No. 510.

Note: BDL indicates value below detection level limits.

Source: Aware Engineering, Inc., 1980.

Another problem reported by the operators is controlling pH within the primary clarifier. The operators attempt to control the pH within the clarifier to a pH of approximately 5. Although theoretically this would assist in reducing the zeta potential on the colloidal oil particles, there is no data available showing that controlling pH in this manner increases the efficiency of oil removal at this facility.

The volume of the proposed surge tank system has been sized to handle the additional groundwater flow; therefore, the proposed tank volume will be adequate for the existing flow plus the proposed groundwater flow. The existing surge pond is mixed with two surface aerators (mixers). Not only do the aerators saturate the waste with dissolved oxygen which utilizes sulfur dioxide downstream, but the aerators air strip volatile organic chemicals.

Industrial wastewater is pumped from the existing surge pond by two pump stations through parallel mix tanks and flocculator/settling tanks as follows:

Lift Station No. 1	1.1 MGD Capacity
Lift Station No. 2	1.26 MGD Capacity
Chemical Mix Tank No. 1	1.1 MGD Capacity
Chemical Mix Tank No. 2	1.26 MGD Capacity
Flocculator/Settling Tank No. 1	1.1 MGD Capacity
Flocculator/Settling Tank No. 2	1.26 MGD Capacity

These capacities are based on one pump in operation in each lift station and the original design capacity of the equipment. The IWWTP is presently' operated using only the No. 2 lift station, mix tank, and flocculator/settling tank. The addition of 150,000 gpd of contaminated groundwater at a constant flow rate should not require additional equipment to be installed. To maintain effective treatment and handle the additional flow, the No. 1 lift station, mix tank, and flocculator/settling tank may have to be periodically placed in operation; however, additional capacity should not be required.

Effluent from the' chemical treatment system flows into the intermediate pond. The intermediate pond is an unlined lagoon with a volume of approximately 5.0 million gallons and aerated with six 15-horsepower surface mechanical aerators. Effluent from the intermediate pond is pumped to the activated sludge process by two pump stations:

Pump Station No. 1:	Two vertical turbine pumps @ 1,150 gpm each
Pump Station No. 2:	Two vertical turbine pumps @ 2,075 gpm each

If one pump is in operation in each pump station, then the combined capacity is 4.6 MGD; therefore, there is sufficient pumping capacity to handle the present maximum industrial wastewater flow, plus the 150,000 gpd of groundwater flow.

The addition of the 150,000 gpd groundwater flow will have an effect on the activated sludge process. This system should be reviewed in light of potential modifications to the intermediate pond and the requirements for biological degradation of the various organic chemicals in the wastewater.

The existing secondary clarifiers have a hydraulic capacity of approximately 4.0 MGD at a surface loading rate of 520 gallons per square foot per day; therefore, they should have sufficient capacity for handling the increased flow. Modifications are required, however, to the return sludge pumping system. These modifications are discussed in a Section V of this report.

The polishing pond and chlorine contact chamber are of sufficient sizes to handle the expected flow increase into the IWWTP. The chlorine contact chamber serves not only for providing detention time for the treated effluent in contact with chlorine, but also as a wet well for the pumps to the sand filters. The chlorine contact chamber has a design capacity of 7.2 MGD, more than sufficient to handle the future flow.

SECTION V. MISCELLANEOUSTOPICS

SECTION V

MISCELLANEOUS TOPICS

PIPELINE LEAK DETECTION AND REPAIR REQUIREMENTS

The force main from the NARF and the in-plant piping are probable contamination sources since virtually all jointed-pipe systems leak. Such leakage is expected and allowed for in pipeline installation specifications which call for testing. This testing involves closing off the section of pipe to be tested and filling it to a prescribed pressure. The pipe is then maintained at that pressure by the addition of measured amounts of fluid using positive displacement pumps. After a fixed length of time (usually one day) the leakage rate may be determined.

The EPA RCRA provides guidelines for the prevention of hazardous waste leaks from regulated tanks, but does not currently address process piping. It is clear, however, that hazardous waste containment must be achieved; this oversight regarding piping has, in fact, been noted.

The June 26, 1985 issue of the Federal Register contained a notice, under Proposed Rules, that EPA intends to adopt regulations for the construction standards for tanks and associated piping carrying hazardous waste. A requirement for secondary containment systems is contemplated in these regulations. Included among acceptable systems are double-wall construction and lined trenches for underground pipe, and additional requirements to assure detection of leakage and pipe failures. Considerable attention is given to the problem of corrosion.

These proposed regulations are in a developmental stage and are expected to be finalized by mid-1986; therefore, final guidelines are not available now. The effective date of implementation of the guidelines and their applicability to existing systems is, obviously, not clear at this time; however, based upon past EPA regulations, retrofitting of existing systems may be required.

Implementation

Failing other alternatives, such as treating hazardous waste at the source, it is probable that the plant influent piping from NARF and much of the industrial waste side in-plant piping will have to be reconstructed. Should reconstruction be required, non-corrosive materials and/or cathodic protection will be employed. Probable implementation procedures are outlined in the following steps:

a) Identify all pipelines carrying hazardous waste. These probably include the plant influent line, all lines between unit processes up to the phenol stabilization pond, and the industrial waste side sludge lines.

b) Reroute Hazardous Waste Carrying (HWC) lines, as much as possible, to permit grouping of underground and aboveground lines.

c) Install underground HWC piping, in lined trenches between manholes. Install a perforated drain line in the lowest position in the trench. Slope lines and liner between manholes, similar to storm sewer construction, to permit collection and detection of leakage. Install leak detection devices (which may include liquid level monitors, pH probes, etc.) at appropriate manhole sites.

d) Install a valve on either side of a capped tee at appropriate manhole sites to permit line isolation and pressure testing. This will allow identification of the defective line in the event of leak detection at a manhole.

e) Replace aboveground HWC piping with double-walled (concentric pipes) conduit except at concreted areas where spill containment is assured. Provide tees from the outer pipe to containment vessels (tanks, manholes, trenches, etc.) where leak detection devices will be installed.

f) Test and repair all piping prior to backfilling trenches or placing pipe in service.

Testing

In the event that new RCRA regulations do not require retrofitting, and the facility elects not to reconstruct the HWC lines, testing and repair of existing pipelines will be required. This will be an essentially identical process to that discussed above under Item f), plus the cost of excavating and finding the leaks. AWWA Specification C600, Section 4, provides a general specification for pressure testing of ductile iron pipelines. This test procedure is outlined as follows:

Leakage Tests

1. All designated pipe, aboveground or belowground, or any valved section thereof, shall be subjected to a leakage test. The leakage test shall be conducted at the lower of: a test pressure 50 percent greater than the operating pressure gradient at the highest elevation of the system or at a pressure 150 percent of the design pressure rating of the pipe.

2. The Contractor shall backfill or anchor all exposed pipe between joints and provide all reaction backing or anchors before hydrostatic testing. It shall be the Contractor's responsibility to locate and repair any and all leaks that may develop. The Owner may direct the Contractor to leave certain joints and connections uncovered until all testing has been completed.

3. Before applying the specified test pressure, all air shall be expelled from the pipe. Taps at points of highest elevation shall be made before the test is made and plugs inserted after the test has been completed.

4. Each valved section of the pipe shall be slowly filled with water and the specified test pressure applied by means of a pump connected to the pipe. The test pressure shall be based on the elevation of the lowest point of the line or section under test, and corrected to the elevation of the test gauge. The Contractor shall make arrangements for metering the amount of water used during the test.

5. All exposed pipes, fittings, valves, and joints will be carefully examined during the test. Any cracked or defective pipe, fittings, or valves discovered in consequence of this pressure test shall be removed and replaced with sound material and the test shall be repeated until satisfactory leakage is within the permitted allowance.

6. Leakage is defined as the quantity of water to be supplied into the pipe, or any valved section thereof, necessary to maintain the specified leakage test pressure after the pipe has been filled with water and the air expelled.

7. No pipe installation shall be accepted until 'the leakage is less than allowable standards. (One currently used standard is 5 gallons per day per inch diameter per 100 joints as specified in AWWA C600.)

8. If the test leakage in any section is greater than that permitted, the Contractor shall locate and repair the defective joints, fittings, and/or pipe until the leakage is within the permitted allowance.

DOMESTIC SLUDGE RETURN PUMPS

The sludge return pumps continually remove the settled sludge from the clarifiers and return the sludge to the aeration tank for reuse. The sludge pumps also provide sufficient hydraulic head so that sludge can be wasted to the digesters by opening a valve on the discharge side of the sludge pumps.

Capacity

Pumps 15P04 and 15P05 have the following capacity:

1,230 GPM at 17 ft. TDH at 1,300 RPM
900 GPM at 12 ft. TDH at 1,030 RPM
600 GPM at 9 ft. TDH at 800 RPM

Pump 15P06 has the following capacity:

300 GPM at 11 ft. TDH at 600 RPM
250 GPM at 9 ft. TDH at 500 RPM
205 GPM at 6 ft. TDH at 420 RPM

Operation

The existing sludge return pumping system is designed improperly and will not provide sufficient sludge return capability at design loading rates unless the Sludge Volume Index (SVI) is unusually low. Pump 15P06 should not be turned on because it will not pump sludge if the other pumps are on. If both clarifiers are in use, Pump 15P04 must be dedicated to Clarifier 1 by closing Valve 15V12 on the suction side of Pumps 15P04 and 14P05. This means that Pump 15P05 is dedicated to Clarifier 2; therefore, each clarifier would have only one sludge return pump of inadequate capacity to serve it.

If Valve 15V12 is opened while both clarifiers are in use, then the majority of return sludge will be drawn from Clarifier 2 because of the larger suction line (10-inch) connecting Clarifier 2 to the sludge return pumps. Insufficient sludge volume would be returned from Clarifier 1 and solids would overflow the weir.

If only one clarifier were used, then the clarifier surface loading rate would be excessive at design flow and a lesser degree of suspended solids removal would be experienced.

Remedy

a) Repipe the sludge pump suction lines such that any sludge pump may withdraw sludge from either the Clarifier 1 (8-inch) or Clarifier 2 (10-inch) sludge lines, independent of any other pumping scenario. This will require replacement of the elbow on the existing suction line, at the top of the riser, with a tee connecting to a new suction riser piped to the Clarifier 2 (10-inch) line. The new riser will run vertically and parallel to the existing riser. Both risers must have isolation valves installed in the vertical run. The existing connection between the Clarifier 1 and Clarifier 2 lines shall be removed and plugged. The proposed piping layout is shown in the sludge piping schematic (see Figure 7).

b) Direct routing of the new riser will not be possible due to a concrete floor support beam being located above the Clarifier 2 (10-inch) line; however, there is sufficient underfloor space to permit connections. The available space for pump installation is minimal; careful planning is required to assure that the equipment may be reasonably serviced.

c) Replace necessary ancillary equipment, including motor starters, wire, etc., as required.

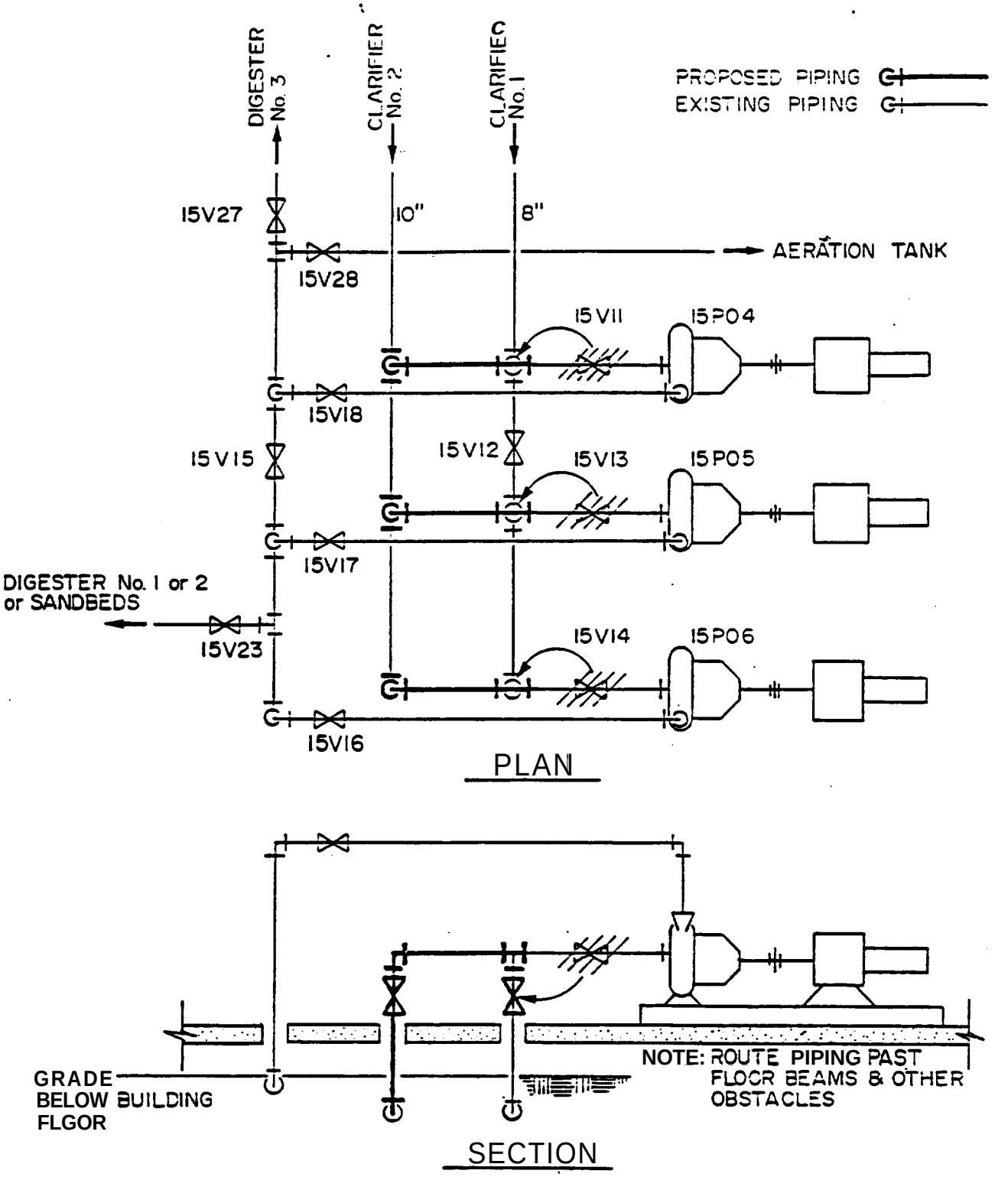

FIGURE 7 SLUDGE PIPING SCHEMATIC

d) Replace all three sludge pumps with equally-sized, variable speed drive pumps, each of sufficient capacity to withdraw sludge from either clarifier at the design loading rate. Estimated capacity required at maximum speed is 1,600 gpm at 30-feet total dynamic head (TDH). These figures should be carefully reviewed and revised as required after field testing to determine. actual line losses when pumping to the aeration tank or Digesters 1, 2, or 3.

COST ESTIMATE

A conceptual cost estimate for the domestic sludge return pumps and the pipeline leak detection and repair requirements is- presented in Table 10. Total estimated construction cost for the sludge pumps is $32,000, and total estimated construction cost for the pipeline leak detection/retrofit work is $2,760,000.

Ta[illegible] 10. Conceptual Cost Estimate (Page 1 of 2)

NAVFAC 11013/7(1-78)
Supersedes NAVDOCKS 2417 and 2417A

COST ESTIMATE

DATE PREPARED: 31 January 1986

SHEET 1 OF 2

ACTIVITY AND LOCATION: Naval Air Station, Pensacola, Florida

CONSTRUCTION CONTRACT NU: N162467-85-C-0267

IDENTIFICATION NUMBER:

ESTIMATED BY: Pullen

CATEGORY CODE NUMBER:

PROJECT TITLE: Industrial Wastewater Treatment Plant

STATUS OF DESIGN: [ ] PED [ ] 30% [ ] 100% [ ] FINAL [X] Other (Specify): MPD

JOB ORDER NUMBER:

ITEM DESCRIPTION	QUANTITY		MATERIAL COST		LABOR COST		ENGINEERING ESTIMATE	
	NUMBER	UNIT	UNIT COST	TOTAL	UNIT COST	TOTAL	UNIT COST	TOTAL
SLUDGE PUMPS								
Demolition: Remove existing pumps, etc.		ls					1,800.	$ 1,800.
Core drill concrete floor	3	ea					50.	150.
6-inch plug valves	3	ea					1,200.	3,600.
6-inch piping and fittings	30	lf					24.	720.
1,600 gpm variable speed sludge pumps	3	ea					5,200.	15,600.
Size 3 motor starters	3	ea					2,500.	7,500.
Miscellaneous wiring, fittings, etc.		ls					1,500.	1,500.
Rebuild pump bases		ls					1,200.	1,200.
TOTAL - SLUDGE PUMPS								$ 32,000.

S/N 0105-LF-010-1335

Tab1

NAVFAC 11013/7 (1-78) NAVDOCKS 2417 and 2417A

COST ESTIMATE

DATE PREPARED: 31 January 1986

SHEET 2 OF 2

ACTIVITY AND LOCATION: Naval Air Station, Pensacola, Florida

CONSTRUCTION CONTRACT NO: N62467-85-C-0267

IDENTIFICATION NUMBER:

ESTIMATED BY: Puller

CATEGORY CODE NUMBER:

PROJECT TITLE: Industrial Wastewater Treatment Plant

STATUS OF DESIGN: [ ] PED [ ] 30% [ ] 100% [ ] FINAL [X] Other (Specify): MPD

JOB ORDER NUMBER:

ITEM DESCRIPTION	QUANTITY NUMBER	QUANTITY UNIT	MATERIAL COST UNIT COST	MATERIAL COST TOTAL	LABOR COST UNIT COST	LABOR COST TOTAL	ENGINEERING ESTIMATE UNIT COST	ENGINEERING ESTIMATE TOTAL
PIPELINE								
Reconstruct plant influent pipeline wit								
concentric piping or lined trench	11,000	lf					32.	$352,000.
*Reconstruct in-plant pipeline with								
concentric piping or lined trench	8,000	lf					32.	256,000.
Leak-detection manholes	65	ea					1,700.	110,500.
Demolition and connection at pump								
stations		ls					20,300.	20,300.
Instrumentation installations	66	ea					1,200.)	79,200.
Trenching and backfilling	30,000	cy					5.	1,90[redacted]
SUBTOTAL								92,718,000.
Leak testing and repair (Q-15 crew)	60	days					700.	$ 42,000.
TOTAL - PIPELINE								2,760,000.
*Weighted estimate for multiple pipe runs.								

59

APPENDICES

APPENDIX A

WORKSCOPE

APPENDIX A

WORKSCOPE

TASK I Review and onsite testing of liner material which will be divided into the following subtasks.

Subtask A: Conduct a literature survey and compile a list of available liners, their properties, and potential for use at Pensacola NAS. Contact the manufacturers of potentially suitable liners to obtain liner material for onsite testing. Set up testing program protocol.

Subtask B: Carry out onsite testing programs by exposing liner material to wastewater in the surge pond and conducting required laboratory tests. Based upon results of the testing program, select suitable liner material.

TASK II Prepare conceptual design memos and preliminary cost estimates suitable for inclusion in Navy Form MCON 1391, for the selected alternatives resulting from the work of the following subtasks.

Subtask A: Evaluate the technical feasibility and cost of lining the existing surge pond and providing a new lined surge pond versus construction of two new concrete tanks to provide surge capacity. Study the existing and new plant influent systems to develop an appropriate diurnal distribution curve of chemical and hydraulic loading; size the surge facilities to accommodate same. Prepare preliminary cost estimates for the selected alternative. Design will meet RCRA standards for double-lined ponds or concrete tanks, and will utilize as much of the existing facilities as possible.

Subtask B: Prepare modifications to the return sludge pumps and piping in the activated sludge system so that both activated sludge clarifiers can be used.

Subtask C: Evaluate the plant unit processes to determine those with insufficient capacity to handle the anticipated loading and propose remedies.

TASK III Prepare preliminary conceptual definition of wastewater treatment plant pipeline leak detection methodology and repair requirements. Detection and repair should take place during other plant construction work by the selected contractor. The promulgation of RCRA pipeline and underground storage tank regulations by EPA will significantly affect Task 111. A very rough cost estimate will be prepared.

TASK IV Prepare an estimate of costs to review ongoing modifications to pretreatment facilities at Pensacola NAS, evaluate hydraulic capacity of industrial wastewater pump stations and force main, and engage in discussions with Pensacola NAS personnel to define improvements needed in the pretreatment facilities. Special attention will be addressed to defining improvements needed to prevent spills.

APPENDIX B

FLEXIBLE MEMBRANE LINER TESTING PROGRAM

FLEXIBLE MEMBRANE LINER (FWL) TESTING PROGRAM

INTRUDUCTION

This testing program is proposed for the high-density polyethylene (HOPE) liner system currently being considered in the conceptual design of a new surge pond for the Naval Air Station WWTP at Pensacola, Florida.

The liner testing program is desirable to:

- Assist in defining the suitability/chemical compatibility of HOPE liner material for use in the proposed surge pond.

- Assist the liner manufacturer/fabricator in providing a warranty for the service application.

- Provide background information to assist in satisfying potential regulatory requirements with respect to chemical compatibility testing of liners for hazardous waste containment.

- Monitor the condition of the installed liner.

The liner testing program is divided into three phases as described herein. In summary, Phase 1 consists of both laboratory and onsite immersion/testing for conceptual design purposes; Phase 2 requires testing be performed during surge pond construction on th2 liner system that is actually being installed; and Phase 3 permits periodic testing to monitor the condition of the installed liner.

Portions of the liner testing program involve hazardous chemical compounds and a wastewater which may contain such compounds. Proper safety procedures shall be employed and all applicable rules and regulations shall be followed in the execution of all work related to

this testing program. Jones, Edmunds & Associates, Inc. shall not be liaole for any damages resulting from the execution of this testing program.

PHASE 1

Phase 1 consists of performing testing in the limited time frame to assist in defining the suitability of HDPE liner material for the proposed service application.

PHASE 1A - MANUFACTURER IN-HOUSE TESTING

Discussion:

Since the liner manufacturer will ultimately be required to furnish a warranty for the completed installation and would normally require compatibility testing before one could be issued, a "spiked" wastewater sample characterization will be sent to each manufacturer for their in-house testing. Liner manufacturers have stated that sufficient test data usually can be obtained from 30 days of laboratory immersion to determine the suitability of their material.

Execution:

1. While it is desirable to utilize active samples of the wastewater for compatibility testing, 1imitations on the field support from Navy WWTP personnel eliminated the possiblity of obtaining a representative wastewater grab sample from the existing surge pond.

2. A copy of this liner testing program shall be sent to each of the following HDPE 1iner manufacturers for their in-house testing:

- Gundle Lining Systems, Inc.
  1340 East Richey Road
  Houston, Texas 77073
  ATTN: Mr. Mark Cadwallader

- National Seal Co.
  600 North First Bank Drive
  Palatine, Illinois 60067
  ATTN: Mr. John Hardison

- Schlegel Lining Technology, Inc.
  200 South Trade Center Parkway
  The Woodlands, Texas 77380
  ATTN: Mr. Anthony Ojeshina

All samples shall be packaged and shipped in accordance with the applicable Department of Transportation (DOT) regulations.

3. Using the "spiked wastewater" sample, as described in Attachment A, each liner manufacturer shall perform the laboratory immersion and testing necessary for them to determine/confirm that their 100-mil HDPE liner system is suitable, and establish a warranty period for the intended service application. Laboratory immersion procedures should prevent the loss of volatile compounds and take into consideration the boiling points of the' compounds present (i.e., 40°C for methylene chloride). Note that the liner system must pass additional testing during construction as described in Phase 2.

   As a minimum, the manufacturer's in-house testing shall include:

   - Weight change as a function of immersion time.

   - Tensile strength and elongation in accordance with ASTM D638 at 2 inches per minute.

- Seam strength of each type of seam which would be utilized in lining an earthen impoundment or vertical-walled concrete tank, including field fillet weld type (made by hand-held extrusion welder in the machine direction), in accordance with ASTM 0413, Machine Method at 2 inches per minute, modified to the "T" peel test configuration.

Upon completion of the testing, the manufacturer shall prepare a report containing a description of the immersion and testing performed, the results obtained, and the conclusions reached. The conclusions shall include:

- A statement confirming that their HDPE liner system is or is not suitable for the intended service application.

- A statement defining the warranty that would be available for this service application. It is expected that a 2-year, 100-percent-labor, and 10-year-materials (100 percent for first 5 years and prorated thereafter) warranty will be required.

- A statement certifying that the liner specimens tested are representative of standard production, and identifying this material (by lot number, resin batch number, etc.) for future reference.

The manufacturer's completed test report is needed as soon as possible, preferably within 45 days of preparation of the "spiked" wastewater sample. Two copies of the report shall be sent to:

Jones, Edmunds & Associates, Inc.'
730 North Waldo Road
Gainesville, FL 32601
ATTN: Cliff L. Hall

PHASE 1B - ONSITE IMMERSION

Discussion:

To provide additional information to assist in determining the suitability of HDPE liner for the proposed service application, sheet and seam samples will be immersed in the existing surge pond lift station as shown in Figures 1 and 2. Compared to laboratory immersion, the main advantage of onsite immersion is the exposure of HDPE samples to liquid service conditions that best simulate the conditions that the proposed installation will be subjected to. The disadvantage of onsite immersion, however, is the longer period of immersion required for liner sample physical property changes to stabilize.

While an onsite immersion period of 1 year or longer would be desirable for this application, it is recognized that the project schedule may not permit this; therefore, two sets of liner samples will be immersed to maximize onsite exposure time. One set will be subjected to "short-term" immersion; 28 days, if weight change has stabilized by the end of this period. The other set will be immersed as long as possible (i.e., until the start of final design of the proposed surge pond) to provide additional exposure test data. This second set of samples also will be available for back-up use should a sample in the first set become lost or damaged during handling or shipment.

Each set of samples will be attached to a holder/frame as shown in Figure 3. Each sample holder will contain one, 100-mil sheet sample and one, 100-mil field fillet weld (made by hand-held extrusion welder in the machine direction) seam sample obtained from each of the three HDPE liner manufacturers listed in Phase 1A. Each sheet sample is large enough to permit one set of U.S. Environmental Protection Agency (EPA) Method 9090 tests to be performed should it later be determined advantageous to do so.

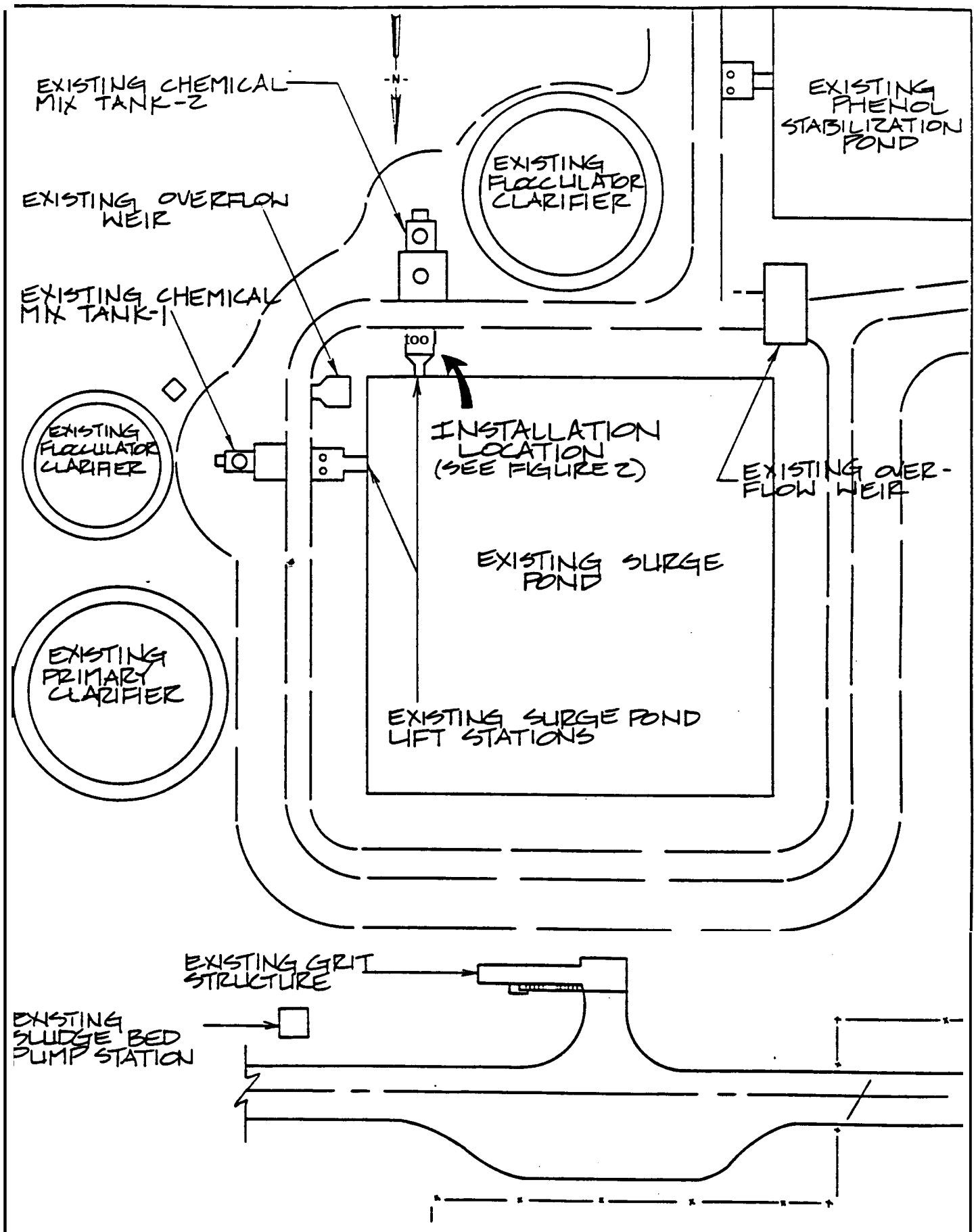

FIGURE 1. FML SAMPLE HOLDERS - INSTALLATION LOCATION

SCALE: 1"=50'

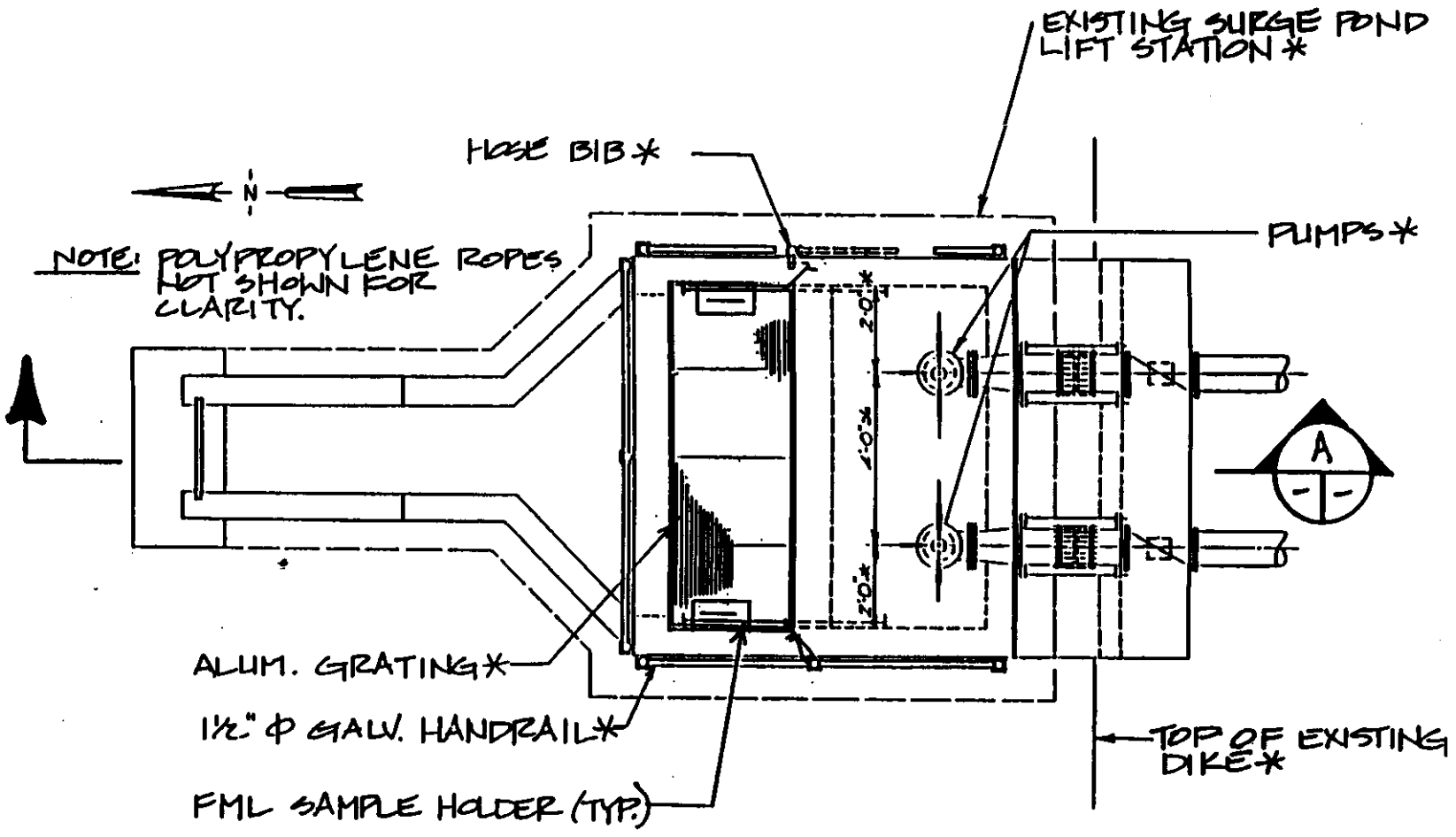

PLAN*

SCALE: ¼"=1'-0"

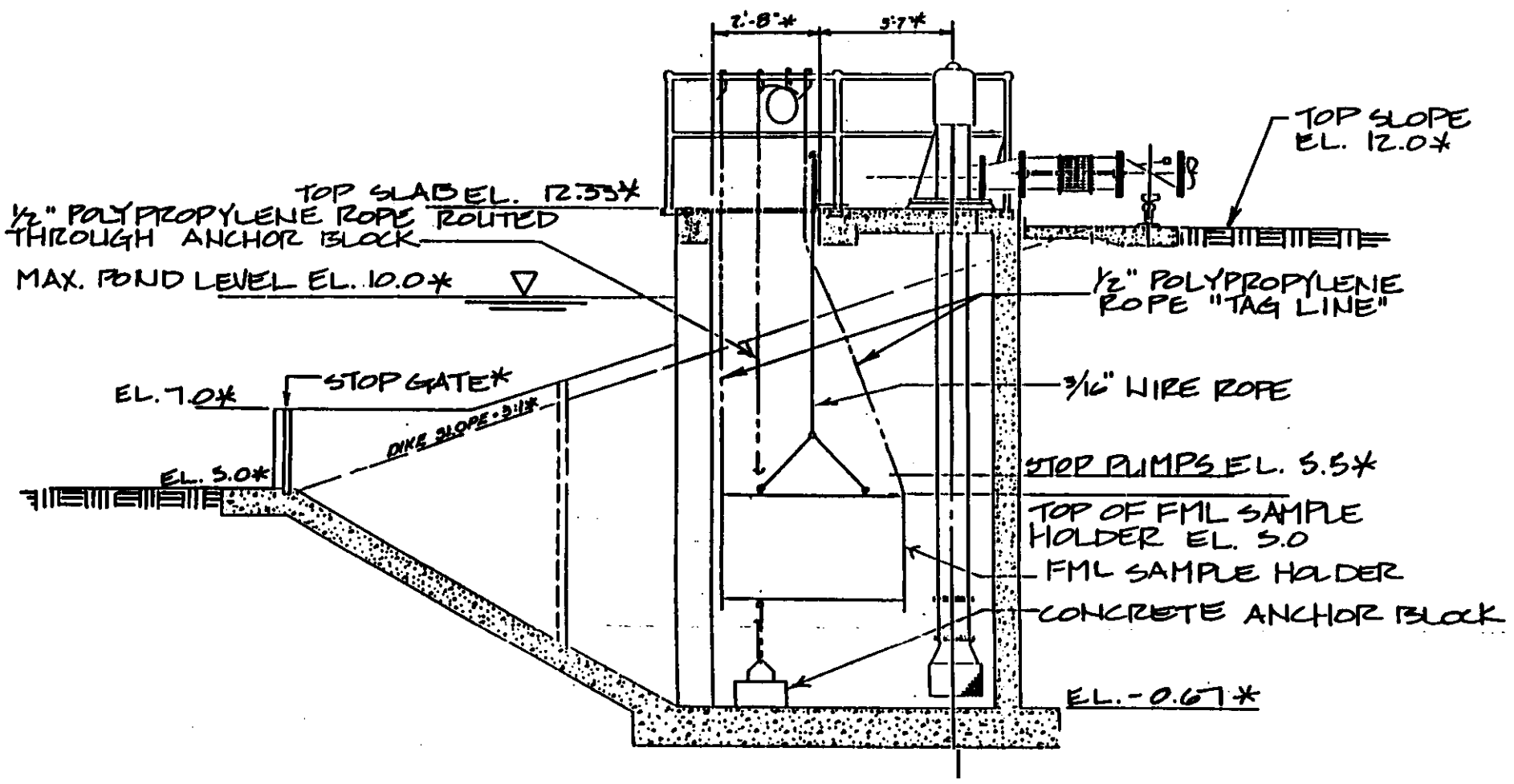

SECTION*

SCALE: ¼"=1'-0"

A

*REF.: NAVFAC DRAWING NO. 5055763, 7/28/78.

FIGURE 2. FML SAMPLE HOLDERS—INSTALLATION

SCALE: AS NOTED

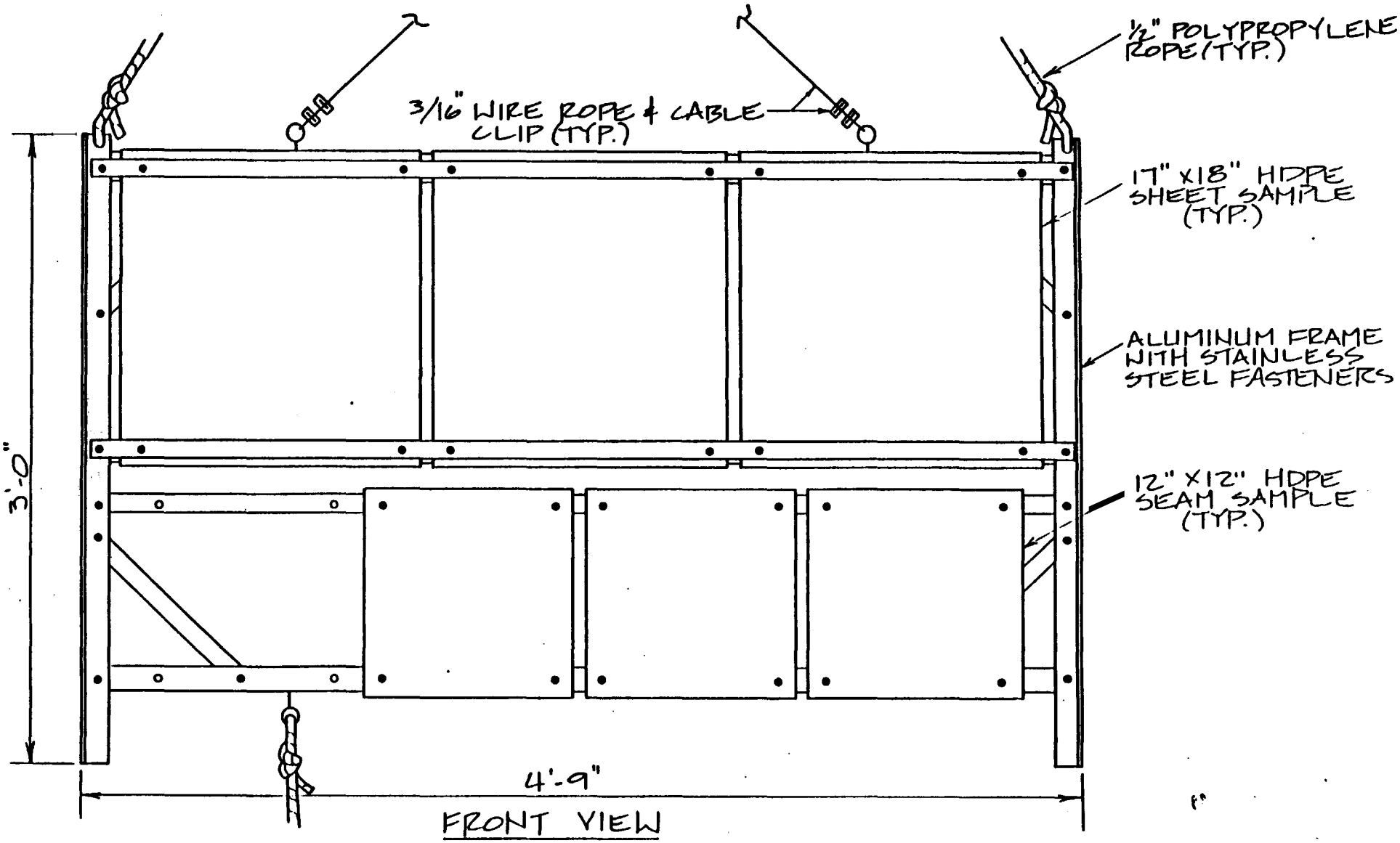

FIGURE 3. FML SAMPLE HOLDER

SCALE: 1½" = 1'-0"

Each liner sample will be identified by the following 3-digit code.

First d git identifies the manufacturer:

1 = Gundle Lining Systems, Inc.

2 = National Seal Company

3 = Schlegel Lining Technology, Inc.

Second digit identifies the sample type:

1 = Sheet sample

2 = Seam sample

Third digit identifies the sample number.

Each liner sample will be marked with its identifying code number by three groups of notches cut along the sample edge. The number of notches per group corresponds to one digit of the identification code. Notches start near the center of the sample and are to be "read" from left to right. The notches are applied to the edge which is perpendicular to the machine direction of the sample.

Execution:

1. Jones, Edmunds & Associates, Inc. shall:

- Obtain the necessary HDPE samples and sample holders, and install these in the existing surge pond lift station.

- Send one unexposed sheet and seam sample for control purposes to an independent testing laboratory. Tensile testing shall be performed in accordance with ASTM D638 at 2 inches per minute on 10 specimens in the machine direction and 10 specimens in the transverse direction. Seam strength testing shall be performed on 10 specimens in accordance with ASTM D413, Machine Method at 2 inches per minute, modified to the "T" peel test configuration.

2. The weight of each sheet sample shall be measured and recorded per the specified time schedule to quantify weight changes as a function of time. Each sheet sample shall be weighed before immersion; after 7, 14, 21, 28, 56, 84, 112 days of immersion; and every 28 days thereafter.

To obtain the samples for weighing, two persons will be required to lift the sample holders from the pond. Once a sample holder has been retrieved, the sheet samples should be rinsed with water and maintained in a wetted condition, removed from the holder, and placed wet in a polyethylene bag to prevent the samples from drying out prior to weighing at the lab. At the lab, the samples should be handled and weighed one at a time to prevent drying out. A sample should be removed from the polyethylene bag, wiped clean of any adhering waste, rinsed with water, blotted dry, and immediately weighed to one-tenth of a gram. Forms for recording the weight of each sample are included in Appendix B. Once the weighing of all samples is complete, they should be returned to immersion in the surge pond as before. Navy personnel shall be required only for the cleaning and weighing of the minor samples.

3. At the end of 28 days of immersion, if weight change has stabilized by the end of this period, one set of sheet and seam samples shall be removed for physical testing. The samples corresponding to the unexposed control samples shall be sent to the same testing laboratory as in Paragraph 1 (Phase 1B) for testing. The other samples of the set shall be sent back to their manufacturers for testing. A copy of the weight change versus immersion time record shall accompany each sheet sample. The exposed samples shall be tested as specified for the unexppsed examples in Paragraph 1 (Phase 1B), except that instead of 10 specimens, only 5 specimens will be required. The samples to be tested should be wiped clean of adhering waste, rinsed with water, packaged wet in polyethylene

bags to prevent drying out, and shipped by express mail. Two copies of all test results/reports shall be sent to Jones, Edmunds & Associates, Inc., as specified in Paragraph 3 (Phase 1A).

4. At the start of final design of the proposed surge pond, the remaining set of sheet and seam samples shall be removed and tested as specified for the 28-day immersion samples in Paragraph 3 (Phase 1B).

PHASE 2

Phase 2 testing will be performed during construction of the proposed surge pond as defined in the construction contract documents. The purpose of Phase 2 testing is two-fold:

- To assist in determining that the particular liner system being installed is suitable for the intended application.

- To provide background information to assist in satisfying potential regulatory requirements with respect to chemical compatibility testing of liners for hazardous waste containment tankage which is part of a treatment system.

The construction contract documents shall list the surge pond liner system as a separate bid item. These documents shall include the following:

- EPA Method 9090 testing shall be performed on liner samples obtained from the job site.

- Each type of factory and field seam used shall be included in the EPA Method 9090 immersion testiny.

- Testing shall be conducted by an independent testing laboratory selected by the Navy.

- The "wastewater sample" used in the EPA Method 9090 immersion testing shall be made from potable water "spiked" with the compounds as defined in Appendix A. This sample shall be prepared by the testing laboratory.

- All liner system samples tested must meet the test passing criteria contained in Appendix B, Attachment C or as established by EPA, whichever is more stringent, to obtain payment for the liner system work.

PHASE 3

The purpose of Phase 3 testing is to monitor the condition of the installed surge pond liner during the service life of the liner. To permit this, the liner system must be designed and installed with removable liner "strip" samples. To model the installed liner system, each "strip" sample should be 30 inches wide and extend from the top of the pond down to the pond floor. Each "strip" sample should include a field fillet weld seam located 9 inches from the edge and running the full length of the sample. The samples should be secured to the pond wall in a manner to facilitate removal without interfering with surge pond operation. The "strip" samples shall be constructed of the same material used for the pond liner system.

With this arrangement, a "strip" sample can be removed periodically and subjected to selective physical testing to determine the approximate condition of the liner at that time. It is recommended that the sampling frequency be once every.6 months for the first 3 years and once annually thereafter; therefore, 23 "strip" samples should be installed to allow 20 years of monitoring/testing.

APPENDIX E
ATTACHMENTS

APPENDIX B

ATTACHMENT A

The actual fluid to be contained in the surge pond does not have a specific composition since it is a wastewater generated by many sources with the result being a complex mixture of organic and inorganic compounds. A test solution cannot therefore be developed which would duplicate the actual service exposure exactly. A reasonable attempt to define a "worst-case" solution can be made, however, based on the information presently available. For the purposes of laboratory immersion testing, the chemical "spike" is defined as follows:

Methylene chloride	7600 ppm
1,1,1 Trichloroethane	7500 ppm
Benzene	500 ppm
Phenol	4500 ppm
Toluene	300 ppm
Methyl ethyl ketone	300 ppm
Napthalene	300 ppm

APPENDIX B
ATTACHMENT B

LINER SAMPLE WEIGHT CHANGE/IMMERSION PERIOD RECORD

Sheet Sample Identification: 111

Exposure: Onsite immersion - Naval Air Station wastewater treatment plant surge pond, Pensacola, Florida

Proposed Retrieval/ Weighing Schedule		Actual Retrieval/ Weighing Schedule		Sample Weight (grams)	Weight Gain (percent)
Date	Period	Date	Period		
12/27/85	0	12/27/85	0	501.3	--
01/03/86	7	01/07/86	11	503.7	0.48
01/10/86	14	01/13/86	17	505.7	0.88
01/17/86	21	01/17/86	21	507.0	1.14
01/24/86	28	02/06/86	41	510.6	1.86
02/21/86	56	03/21/86	84	515.9	2.91
03/21/86	84				
04/18/86	112				
05/16/86	140				
06/13/86					

LINER SAMPLE WEIGHT CHANGE/IMMERSION PERIOD RECORD

Sheet Sample Identification: 112

Exposure: Onsite immersion - Naval Air Station wastewater treatment plant surge pond, Pensacola, Florida

Proposed Retrieval/ Weighing Schedule		Actual Retrieval/ Weighing Schedule		Sample Weight (grams)	Weight Gain (percent)
Date	Period	Date	Period		
12/27/85	0	12/27/85	0	516.9	--
01/03/86	7	01/07/86	11	518.9	0.39
01/10/86	14	01/13/86	17	521.0	0.79
01/17/86	21	01/17/86	21	522.4	1.06
01/24/86	28	02/06/86	41	525.9	1.74
02/21/86	56	03/21/86	84	530.6	2.65
03/21/86	84				
04/18/86	112				
05/16/86	140				
06/13/86					

LINER SAMPLE WEIGHT CHANGE/IMMERSION PERIOD RECORD

Sheet Sample Identification: 211

Exposure: Onsite immersion - Naval Air Station wastewater treatment plant surge pond, Pensacola, Florida

Proposed Retrieval/ Weighing Schedule		Actual Retrieval/ Weighing Schedule		Sample Weight (grams)	Weight Gain (percent)
Date	Period	Date	Period		
12/27/85	0	12/27/85	0	474.6	--
01/03/86	7	01/07/86	11	477.7	0.55
01/10/86	14	01/13/86	17	480.8	1.31
01/17/86	21	01/17/86	21	483.8	1.94
01/24/86	28	02/06/86	41	488.7	2.97
02/21/86	56	03/21/86	84	482.4 (1)	1.64
03/21/86	84				
04/18/86	112				
05/16/86	140				
06/13/86					

(1) Data point validity questionable.

LINER SAMPLE WEIGHT CHANGE/IMMERSION PERIOD RECORD

Sheet Sample Identification: 212

Exposure: Onsite immersion - Naval Air Station wastewater treatment plant surge pond, Pensacola, Florida

Proposed Retrieval/ Weiahing Schedule		Actual Retrieval/ Weighing Schedule		Sample Weight (grams)	Weight Gain (percent)
Date	Period	Date	Period		
12/27/85	0	12/27/85	0	477.3	--
01/03/86	7	01/07/86	11	481.0	0.78
01/10/86	14	01/13/86	17	483.8	1.36
01/17/86	21	01/17/86	21	485.8	1.78
01/24/86	28	02/06/86	41	491.6	3.00
02/21/86	56	03/21/86	84	460.1 (1)	--
03/21/86	84				
04/18/86	112				
05/16/86	140				
06/13/86					

(1) Data point validity questionable.

LINER SAMPLE WEIGHT CHANGE/ IMMERSION PERIOD RECORD

Sheet Sample Identification: 311

Exposure: Onsite immersion - Naval Air Station wastewater treatment. plant surge pond, Pensacola, Florida

Proposed Retrieval/ Weighing Schedule		Actual Retrieval/ Weighing Schedule		Sample Weight (grams)	Weight Gain (percent)
Date	Period	Date	Period		
12/27/85	0	12/27/85	0	535.5	--
01/03/86	7	01/07/86	11	537.7	0.41
01/10/86	14	01/13/86	17	540.1	0.86
01/17/86	21	01/17/86	21	541.2	1.06
01/24/86	28	02/06/86	41	545.1	1.79
02/21/86	56	03/21/86	84	550.4	2.78
03/21/86	84				
04/18/86	112				
05/16/86	140				
06/13/86					

LINER SAMPLE WEIGHT CHANGE/IMMERSION PERIOD RECORD

Sheet Sample Identification: 312

Exposure: Onsite immersion - Naval Air Station wastewater treatment plant surge pond, Pensacola, Florida

Proposed Retrieval/ Weighing Schedule		Actual Retrieval/ Weighing Schedule		Sample Weight (grams)	Weight Gain (percent)
Date	Period	Date	Period		
12/27/85	0	12/27/85	0	508.3	--
01/03/86	7	01/07/86	11	510.2	0.37
01/10/86	14	01/13/86	17	512.4	0.81
01/17/86	21	01/17/86	21	513.6	1.04
01/24/86	28	02/06/86	41	517.2	1.75
02/21/86	56	03/21/86	84	514.8 (1)	1.28
03/21/86	84				
04/18/86	112				
05/16/86	140				
06/13/86					

(1) Data point validity questionable.

APPENDIX B

ATTACHMENT C
TESTING PASS/FAIL CRITERIA

The following specifications shall establish one set of passing criteria for 100-mil HDPE testing:

Property	Test Method	Requirement* Unexposed Sample	Requirement* Exposed Sample
Weight Change	-	-	±3 percent maximum change of original unexposed value
Tensile Properties	ASTM D638 Type IV, 2 ipm		
Tensile Strength at Yield		2,000 psi minimum	1,800 psi minimum
Tensile Strength at Break		3,800 psi minimum	3,420 psi minimum
Elongation at Break		600 percent minimum	540 percent minimum
Tear Resistance	ASTW 01004 Die C, 2 ipm	70 pounds minimum	60 pounds minimum
Seam Strength	ASTM D413 Machine Method, 2 ipm, modified to "T" peel test configuration	FTB† and 100 ppi minimum	FTB† and 90 ppi minimum

* When a test is applied to samples subjected to different periods of exposure, test results must also demonstrate that the property change has stabilized with respect to exposure time for the sample to be classified as passing the test.

† FTB - film tear bond

APPENDIX C
CHEMICAL COMPATIBILITY TESTING REPORT

SCHLEGEL LINING TECHNOLOGY, INC.

200 South Trace Canter Parkway
P.O. Box 7730
The Woodlands, Texas 77380

Tel: (409) 273-3066 (Conroe)
(713) 350-1613 (Houston)
Telex: 792745

Report On

Chemical Compatibility Testing

For

Jones, Edmunds and Associates, Inc.

Pensacola Naval Air Station Wastewater Treatment Plant

April 21, 1986

Introduction

On February 24, 1986 a chemical comoatibility study was initiated to determine the resistance of SCHLEGEL ® Sheet- to chemical attack by the effluent frcm the Pensacola Naval Air Station Wastewater Treatment Plant. Since an actual sample of the effluent was unavailable, a 'worst-case' approximation was formulated in-house. See Appendix A for composition.

Both sheet and weld samples were immersed in this medium and were maintained at ambient (73-78 °F) temperature for the duration of the test. Sheet samples were checked every seven days for weight-change. Sample containers were agitated daily, and the waste solution changed weekly.

The test was concluded at twenty-tight days. It is uncertain whether the samples had reached stability with regard to weight-change. See Table I for data. The variability of data is due to mechanical difficuities in our balance which 1imited the accuracy of the data collected. Fol1owing an acclimatization period for the immersed samples, physical (destructive: testing was performed in order to ascertain the effects of the medium on SCHLEGEL ® Sheet. Data for exposed specimens were comoared to data from control specimens in order to determine the degree of effect. See Tables II - V for actual data.

Analysis of Data

Schlegel standards typically allow for a ±3% change in weight, and a ±10% change in physical properties. Weight change at twenty-eight days was 3.0 ± 0.7%, or 2.3 to 3.7%. This again, when realised along with the changes in physical properties, indicates minimal effect of the medium on the SCHLEGEL ® Sheet. Values for both control ana exposed specimens are wel1 above the minimum manufacturing specification. SCHLEGEL ® Sheet should perform well in this application.

David G. Dewsnap
Q.A. Engineer

cc: C. Attaway
J. Price
C. Hall - JEA

APPENDIX A - Composition of Testing Medium

Cwoound	Conc. (porn)	Conc. (ml/l @ 20°C)
Benzene	500	0.6
Methylene Chloride	7600	5.7
Methyl Ethyl Ketone	300	0.4
Naphthalene	300	0.3 (g/l)
Phenol	4500	4.2
Toluene	300	0.3
1, 1, 1 - Trichloroethane	7500	5.6
Water (Tap)	Balance to 1.000 1 Volume	

TAELE I - **Weight** Change

	7-Days	14-Days	21-3ays	28-Days
	2.75%	3.47%	3.74%	3.39%
	3.07	2.83	3.21	3.33
	2.15	1.55	1.82	1.95
	2.66	2.36	2.05	2.45
	1.76	2.94	3.29	3.74
Mean	2.5	2.6	2.3	3.0
Std. Dev.	±0.5	±0.7	±0.8	±0.7

TABLE II - Sheet - **Control** Group

	Tensi1e At Yield	Tensi1e At Break	Elongation At Yield	Elongation At Break
	3042 psi	4136 psi	17.5%	773%
	3059	4349	17.5	785
	3040	4425	17.5	778
	2973	4052	17.5	742
	3051	4298	17.5	782
Mesn	3023	4222	17.5	772

TABLE III - Sheet - **Exposed Group**

	Tensiie At Yield	Tensile At Break	Elongation At Yieic	Elongation At Break
	2840 psi	4406 psi	17.5%	826
	2909	4476	17.5	830
	2952	4407	17.5	822
	2813	4168	17.5	799
	2892	4300	17.5	802
Mean	2881	4351	17.5	816
Δ% Control	-5.0	+2.3	0.0	+5.7

TABLE IV - Weld - Control Group

	Pee! Value	Bond Strength *
	2409 psi	145%
	2417	145
	2471	148
	2468	148
	2378	143
Mean	2429	146

* Film Tear Bond Strength Per NSF Std. #54.

TABLE V - Weld - Exposed Group

	Peel Value	Bond Strength *
	> 2209 psi	>133%
	>2168	>130
	>2261	>136
	>2390	>143
	>2346	>141
Mean	>2275	>136
Δ% Control	<-6.3	<-6.a

NOTE: Values shown in Table V are low approximations of actual. Recorder readings were off scale, thereby causing inaccurate results.

* F.T.B. Strength Per NSF Std. #54.