32501.000
03.04.00.0001

N00204.AR.000141
NAS PENSACOLA
5090.3a

28

GENERIC QUALITY ASSURANCE PROJECT PIAN
CONTAMINATION ASSESSMENTS
AND REMEDIAL ACTIVITIES
NAVAL AIR STATION PENSACOLA
PENSACOLA, FLORIDA

July, 1990

Prepared for:

DEPARTMENT OF THE NAVY
SOUTHERN DIVISION
NAVAL FACILITIES ENGINEERING COMMAND
2155 Eagle Drive, P.O. Box 10068
Charleston, South Carollna 29411-0068

Contract Number N62467-88-C-0200

ecology and environment, inc.
316 SOUTH BAYLEN STREET, PENSACOLA, FLORIDA 32501, TEL (904) 435-8926
International Specialists In the Environment

UH1017

GENERIC QUALITY ASSURANCE PROJECT PLAN
CONTAMINATION ASSESSMENTS
AND REMEDIAL ACTIVITIES
NAVAL AIR STATION PENSACOLA
PENSACOLA, FLORIDA

July, 1990

Prepared for:

DEPARTMENT OF THE NAVY
SOUTHERN DIVISION
NAVAL FACILITIES ENGINEERING COMMAND
2155 Eagle Drive, P.O. Box 10068
Charleston, South Carolina 29411-0068

Contract Number N62467-88-C-0200

ecology and environment, inc.
316 SOUTH BAYLEN STREET, PENSACOLA, FLORIDA 32501, TEL. (904) 435-8925
International Specialists in the Environment

recycled paper

GENERIC QUALITY ASSURANCE PROJECT PLAN
CONTAMINATION ASSESSMENTS
AND REMEDIAL ACTIVITIES
NAVAL AIR STATION PENSACOLA
PENSACOLA, FLORIDA

JUNE 1990

Prepared for:
DEPARTMENT OF THE NAVY
SOUTHERN DIVISION
NAVAL FACILITIES ENGINEERING COHMAND
2155 Eagle Drive, P.O. Box 10068
Charleston, South Carolina 29411-0068

Contract Number N62467-88-C-0200

Approved by:

E & E Project Director
Richard J. Rudy

Date: 7/16/90

E & E Quality Assurance Officer
Marcia Meredith

Date: July 10, 1990

Regional Quality Assurance Officer
Kim Walker

Date: July 18, 1990

TABLE OF CONTENTS

Section		Page
1.0	INTRODUCTION	1-1
2.0	PROJECT DESCRIPTION	2-1
3.0	WORK PLANS AND SITE-SPECIFIC QUALITY ASSURANCE PROJECT PLANS	3-1
4.0	PROJECT ORGANIZATION AND RESPONSIBILITY	4-1
	4.1 KEY PROJECT PERSONNEL	4-4
	4.2 ASC FACILITIES AND ANALYTICAL CAPABILITIES	4-10
	4.2.1 Equipment	4-10
	4.2.2 Analytical Capabilities	4-14
5.0	QA/QC OBJECTIVES FOR MEASUREMENT DATA	5-1
	5.1 DEFINITIONS	5-4
	5.1.1 Accuracy	5-4
	5.1.2 Precision	5-4
	5.1.3 Completeness	5-4
	5.1.4 Representativeness	5-4
	5.1.5 Comparability	5-4
	5.2 E & E QA/QC OBJECTIVES	[5-4]
	5.3 MEASUREMENT OF ANALYTICAL DATA QUALITY	5-5
	5.3.1 Accuracy	5-5
	5.3.2 Precision	5-6
	5.3.3 Completeness	5-7
	5.3.4 Representativeness	[5-71
	5.4 QA/QC TARGETS	5-8

[Bold items enclosed in brackets denote changes from original text]

Table of Contents (Coat.)

Section Page

6.0 FIELDWORK AND SAMPLING PROCEDURES 6-1
6.1 AIR INVESTIGATION 6-1
6.1.1 Preliminary [Assessment] 6-1
6.1.2 Volatile Organic Compounds (VOC) Air Sampling .....[6-4]
6.1.3 Particulate Air Sampling .....[6-8]
[6.1.4 Semi-Volatile Sampling ..... 6-12]
6.2 SURFACE GEOPHYSICAL SURVEYS .....[6-13]
6.2.1 Electromagnetic Conductivity Surveys .....[6-14]
6.2.2 Electromagnetic Hetal Detection (EM-MD) ..[6-16]
6.2.3 Magnetometer (Hag) Surveys .....[6-16]
6.2.4 Ground Penetrating Radar (GPR) Surveys ...[6-17]
6.2.5 Very Low Frequency (VLF) Surveys ..... 6-18]
6.2.6 'Seismic Surveys ..... [6-18]
. 6.2.6.1 Seismic Refraction .....[6-19]
6.2.6.2 Seismic Reflection .....[6-20]
6.2.7 Data Reduction and Interpretation .....[6-21)
6.3 RADIATION SURVEYS AND MONITORING .....[6-21]
6.3.1 [Personnel Training ..... 6-22]
[6.3.2 Personnel Monitoring ..... 6-22]
[6.3.3 Personal Protection ..... 6-23]
[6.3.4 Waste Disposal Methods .....6-23]
[6.3.5] Site Entry ..... [6-23]
[6.3.6] Site Characterization [Survey] .....[6-25]
[6.3.7] Sample Area Radiation Monitoring .....[6-25]
6.4 SOIL EEADSPACE SURVEY ..... [6-26]
6.5 SOIL GAS SURVEY ..... [6-26]
6.6 SOIL SAMPLING ..... [6-28]
6.6.1 Surface Soils ..... [6-28]
6.6.2 Subsurface Soils ..... [6-29]

0001311

[bold items enclosed in brackets denote changes from original text]

Table of Contents (Cont.)

Section		Page
6.7	DRILLING AND MONITORING WELL INSTALLATION	[6-31]
6.7.1	Pre-Fieldwork Activities	[6-31]
6.7.2	Drilling Methods	[6-31]
6.7.2.1	Hollow-Stem Auger Drilling	[6-31]
6.7.2.2	Mud-Rotary Drilling	[6-31]
6.7.2.3	Split-Spoon Sampling	[6-32]
6.7.3	Standard Monitoring Well Construction	[6-32]
6.7.4	Installation of Surface Casing	[6-34]
6.7.5	Development of Monitoring Wells	[6-34]
6.7.6	Surveying of Wells	[6-34]
6.8	GROUNDWATER SAMPLING	[6-35]
6.8.1	Measurement of Water Level and Well Volume	[6-35]
6.8.2	Purging Static Water	[6-36]
6.8.3	Sample Collection	[6-37]
6.9	SURFACE WATER/SEDIMENT SAMPLING	[6-38]
6.9.1	Surface Water Sampling	[6-38]
6.9.2	Sediment Sampling	[6-39]
6.10	EQUIPMENT DECONTAMINATION	[6-39]
6.11	SAMPLE CONTAINERS	[6-40]
6.12	FIELD QA/QC SAMPLES	6-40
7.0	SAMPLE CUSTODY	7-1
7.1	CHAIN-OF-CUSTODY	7-1
7.1.1	Field Custody Procedures	7-2
7.1.2	Sample Tags	7-2
7.1.3	Chain-of-Custody Record	7-3
7.1.4	Transfer of Custody and Shipment	7-3
7.1.5	Laboratory Custody Procedures	7-4
7.1.6	Custody Seals	7-4

[Bold items enclosed in brackets denote changes from original text]

Table of Contents (Cont.)

Section | Page

7.2 DOCUMENTATION 7-5
7.2.1 Sample Identification 7-5
7.2.2 Daily Logs 7-6
7.2.3 Corrections to Docwentation 7-7
7.2.4 Photographs 7-7
7.3 SAMPLE HANDLING, PACKAGING, AND SHIPPING 7-8
7.3.1 Sample Packaging 7-8
7.3.2 Shipping Containers 7-9
7.3.3 Marking and Labeling 7-10
7.4 SAMPLE PRESERVATION AND HOLDING TIMES 7-11

8.0 CALIBRATION PROCEDURES AND FREQUENCY 8-1
8.1 FIELD INSTRUMENTATION 8-1
8.2 LABORATORY INSTRUMENTATION 8-8

9.0 ANALYTICAL PROCEDURES 9-1
9.1 SCREENING ANALYTICAL PROCEDURES 9-1
9.2 ANALYTICAL PROCEDURES [AND QA OBJECTIVES] 9-7

10.0 DATA REDUCTION, VALIDATION. AND REPORTING 10-1

11.0 INTERNAL QUALITY CONTROL CHECKS 11-1
11.1 FIELD [QUALITY CONTROL] (QC) SAMPLES 11-1
11.2 LABORATORY [QUALITY CONTROL] (QC) ANALYSES 11-2

12.0 PERFORMANCE AND [LABORATORY] AUDITS 12-1

13.0 PREVENTIVE MAINTENANCE 13-1

14.0 PROCEDURES USED TO ASSESS DATA ACCURACY. PRECISION.
AND COMPLETENESS 14-1
14.1 ACCURACY 14-1

0001312

[Bold items enclosed in brackets denote changes from original text]

Table of Contents (Cont.)

14.2 PRECISION 14-2

14.3 COMPLETENESS 14-2

[14.4 QUALITY CONTROL CHARTS .....14-2]

15.0 CORRECTIVE ACTION 15-1

16.0 QUALITY ASSURANCE REPORTS 16-1

Appendix

A GENERALIZED WORK PLAN OUTLINE A-1

B SITE-SPECIFIC QUALITY ASSURANCE PROJECT PLAN FORM B-1

C BIOGRAPHIES OF KEY PERSONNEL C-1

D ASC STAFF LIST D-1

E ASC SAMPLE MANAGEMENT STANDARD OPERATING PROCEDURES (SOPs) E-1

F CHAIN-OF-CUSTODY FORMS AND LABELS F-1

G SAMPLE DATA REPORTING FORMAT G-1

[H PROCUREMENT AND MATERIAL CONTROLS H-1

I TRAINING PROCEDURES I-1

J METEOROLOGICAL MEASUREMENTS J-1

K COMPENDIUM METHOD TO-14 ..... K-1

L GENERAL AIR SAMPLING LOCATION GUIDELINES L-1

M HI-VOL CALIBRATION M-1

N SSI (PM-10) INSTALLATION N-1

O POLYURETHANE FOAM (PUF) SAMPLING METHOD ..... O-1]

[Bold items enclosed in brackets denote changes from original text]

LIST OF ILLUSTRATIONS

Figure		Page
2-1	Location of NAS Pensacola	2-2
2-2	NAS Pensacola Site Locations	2-5
4-1	Quality Assurance Program Organization	4-2
4-2	Analytical Services Center Management Organization	4-3
10-1	Data Flow/Reporting Scheme	10-4

[Bold items enclosed in brackets denote changes from original text]

LIST OF TABLES

Table		Page
2-1	NAS Pensacola Sites	2-4
3-1	NAS Pensacola Work Plan Groups	3-2
4-1	Laboratory Certifications and Qualifications	4-11
5-1	USEPA General Levels of Analytical Data Quality	5-2
6-1	Maximum Allowable Radiation Dose To Investigation Personnel	[6-24]
6-2	Sample Containers and Volumes for Soil Samples	[6-41]
6-3	Sample Containers and Volumes for Water Samples	[6-42]
6-4	Additional Sample Container and Volume Information	[6-43]
7-1	Sample Preservation and Holding Times for Soil and Water Samples	7-12
7-2	Additional Sample Preservation and Holding Time Information	7-13
8-1	List of Major Instruments to be Used for Sampling and Analysis Program	8-2
9-1	Analytical Screening for Selected Volatile Organic Compounds	9-3
9-2	Analytical Screening for Groups of Selected Extractable Organic Compounds	9-4
9-3	Analytical Screening for Selected Pesticides and Total PCBs	9-5
9-4	Analytical Screening for Selected Metals	9-6

[Bold items enclosed in brackets denote changes from original text]

List of Tables (Cont.)

Table		Page
9-5	QA Objective Summary	9-8
9-6	Non-CLP Base Neutrals	9-20
9-7	CLP Base Neutrals	9-21
9-8	Non-CLP Acid Phenols	9-23
9-9	CLP Acid Phenols	9-24
9-10	Non-CLP Volatile Organics	9-25
9-11	CLP Volatile Organics	9-26
9-12	Priority Pollutant Pesticides and PCBs	9-27
9-13	CLP Pesticides/PCBs	9-28
9-14	Matrix Spike Recovery Limits	9-29
9-15	Contract Required Surrogate Spike Recovery Limits	9-30
9-16	Sample Preparation Methods	9-31
9-17	Selected Radionetric Analytical Methods For Water Samples	9-33
[13-1	Routine Instrument Maintenance Operation	13-2]

0001315

[bold items enclosed in brackets denote *changes* from original text]

1.0 INTRODUCTION

This Generic Quality Assurance Project Plan (GQAPP) has been prepared by Bcology and Environment, Inc., (E & E) for the Southern Division, Naval Facilities Engineering Command, under Contract No. N62467-88-C-0200, which encompasses the performance of contamination assessments and remedial activities at 37 sites on Naval Air Station (NAS) Pensacola, Escambia County, Florida. This work is being conducted as part of the Naval Installation Restoration (IR) Program to investigate and remediate uncontrolled hazardous waste disposal sites associated with naval operations.

This GQAPP presents the policies, organization, objectives, functional activities, and specific quality assurance/quality control (QA/QC) procedures that will be employed by E & E to ensure that all technical data generated during the performance of the investigations at NAS Pensacola are accurate, representative and ultimately capable of withstanding judicial scrutiny. A Site-Specific Quality Assurance Project Plan (SQAPP) that defines site-specific sampling/analytical requirements and identifies any procedural variations from the GQAPP will be submitted with the work plan developed for each site or site group.

QC consists of a system of checks on field sampling and laboratory analysis (through the use of field blanks, duplicates, documentation of all sample movement, chain-of-custody records, etc.) which provides supporting information on the quality of the methods employed and of the analytical data.

QA consists of overview checking to certify that the QC procedures have been properly implemented so as to produce accurate data. QA is, in general, a supervisory 'function.

[Bold items enclosed in brackets denote changes from original text]

All QA/QC procedures will be in accordance with applicable professional technical standards, U.S. Environmental Protection Agency (USEPA) requirements, Naval Energy and Environmental Support Activity (NEESA) requirements, and specific project goals and requirements. This GQAPP has been prepared in accordance with all USEPA, Florida Department of Environmental Regulation (FDER), and U.S. Navy guidance documents (in particular, Contract Laboratory Program [CLP] and Test Methods for Evaluating Solid Waste [SW-846, Third Edition] guidelines).

This GQAPP incorporates the following QA/QC elements:

- All fieldwork activities, including sample collection;
- Sample management and chain-of-custody;
- Sampling equipment decontamination;
- Sample analysis and analytical control;
- Field and laboratory instrument calibration;
- Field and laboratory documentation;
- Preventive maintenance;
- Reviews and audits;
- Corrective action; and
- Reporting.

Analytical samples collected in the field will be shipped to E & E's Analytical Services Center (ASC) for analysis. Duplicate, blank, replicate, and spiked samples will be used to develop estimates of the quality of the analytical data. Field audits will be conducted to verify that proper sampling techniques and chain-of-custody procedures are followed. Field data compilation, tabulation, and analysis will be checked for accuracy. Calculations and other post-field tasks will be reviewed by project personnel.

Site-specific detection limits for sample analysis will be specified in the SQAPPs that will submitted with the work plans developed for each site or site group. These detection limits will be in accordance with USEPA-approved methods, where available, for analysis of organics and inorganics. QC requirements will be specified in advance by the project manager and included in this SQAPP.

Equipment used to take field measurements will be maintained and calibrated in accordance with established procedures. Records of calibration and maintenance will be kept by assigned personnel.

Document control procedures will be used to coordinate the distribution, coding, storage, retrieval, and review of all data collected during all fieldwork activities. These activities may include, but are not limited to: geophysical, soil headspace, and soil gas surveys; the collection of air, surface water, sediment, soil, groundwater, and free-floating product samples; measurement of field parameters, such as pH and specific conductance; and location/elevation surveys. These procedures will ensure the safeguarding of any sensitive materials generated or obtained during the study.

[Bold items enclosed in brackets denote changes from original text]

2.0 PROJECT DESCRIPTION

The NAS Pensacola installation occupies an area of approximately 5,800 acres on a peninsula in southern Escambia County, five miles southwest of the City of Pensacola. This peninsula is bounded on the north by Bayou Grande, and on the east and south by Pensacola Bay. Figure 2-1 is a location map of NAS Pensacola.

The installation supports various housing, training, and support activities as well as a Naval Aviation Depot (NADEP), a large industrial complex for major repairs and refurbishment of aircraft engines and frames. The main industrial operations conducted at NAS Pensacola are concentrated in the older portion of the base, on the eastern end of the. peninsula. The western end primarily contains the main airfield (Forrest Sherman Field) and undeveloped wooded land.

NAS Pensacola has historically conducted many activities involving hazardous materials:

- Fuel handling and management;
- Painting and paint stripping;
- Waste solvent disposal;
- Firefighting and crash training;
- Aircraft maintenance;
- Metal plating;
- Low-level radioactive materials handling; and
- Operation of general waste management facilities.

Some of the activities are no longer performed, and to a large extent there are no records of these former activities. Solid wastes have been disposed of primarily at two landfill areas: one west of the golf course site (Site 1, Sanitary Landfill) and the other north of

[Bold items enclosed in brackets denote changes from original text]

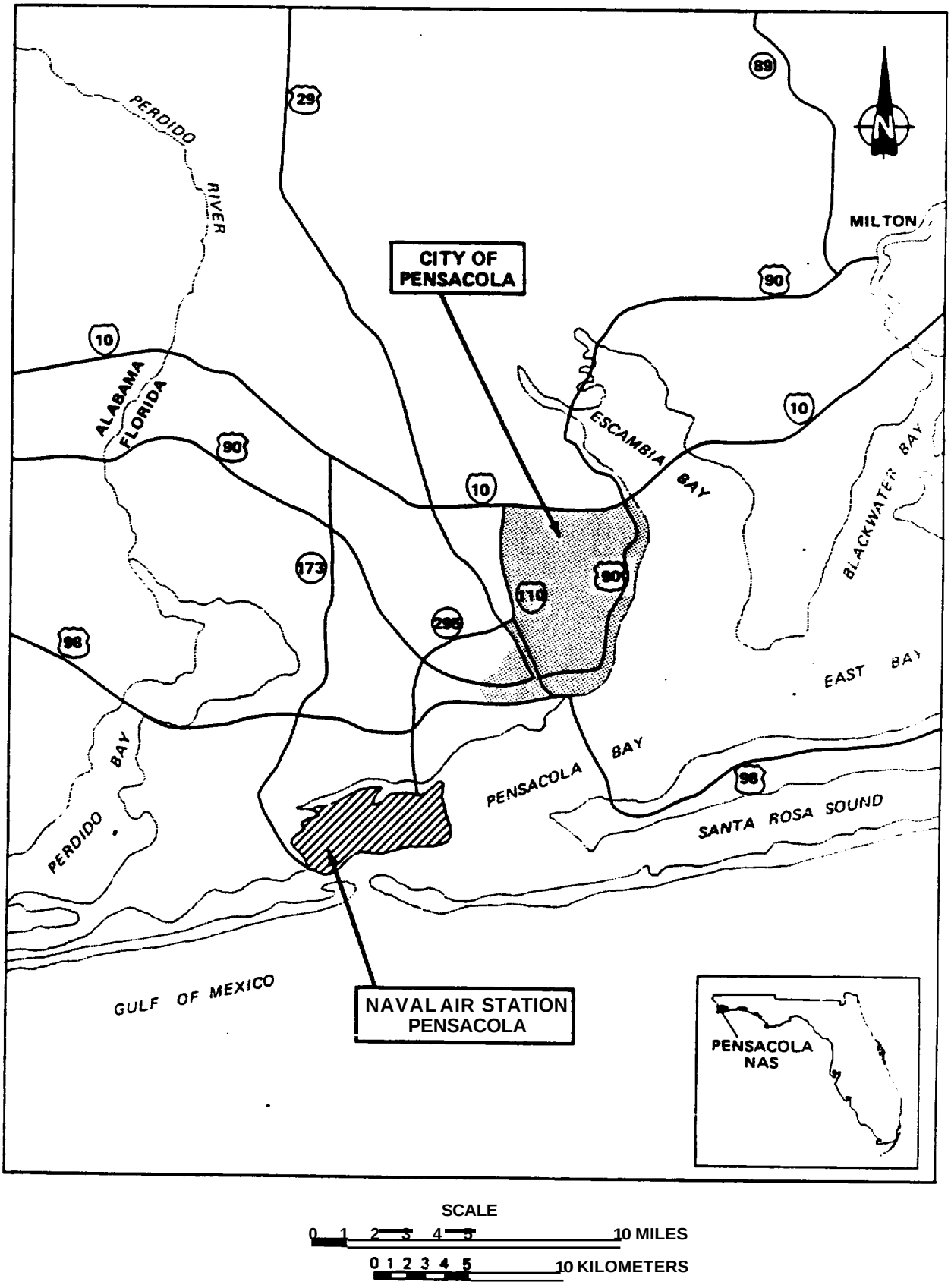

Figure 2–1 LOCATION OF NAVAL AIR STATION PENSACOLA

0001318

Chevalier Field (Site 11). Liquid wastes from the NADEP operations were discharged to storm sewers until 1973, when an industrial sewer system and industrial wastewater treatment plant (IWTP) were installed. Other activities involving hazardous materials include pesticide application, use of radioactive materials, transformer storage, transport and storage of fuel, and firefighting/crash training.

Previous environmental studies of NAS Pensacola were conducted under the Navy Assessment and Control of Installation Pollutants (NACIP) Program, and consisted of an Initial Assessment Study (IAS) followed by a two-part Confirmation Study. The on-site survey portion of the IAS was performed in 1982 by a team of Navy environmental specialists. The IAS final report was released in June 1983. Geraghty & Miller, Inc., (G & H) was retained by the Navy in 1984 to perform the Confirmation Study, which consisted of a Verification Study followed by a Characterization Study. Final reports were issued in July 1984 and March 1986, respectively. Groundwater, surface water, sediment, and soil samples were collected and analyzed during both parts of the Confirmation Study.

Table 2-1 is a list of the 37 NAS Pensacola sites to be investigated as part of E & E's study, and Figure 2-2 shows the general site locations. E & E's potential scope-of-work at NAS Pensacola encompasses the full spectrum of contamination assessment and remedial activities specified under the Comprehensive Environmental Response, Compensation, and Liability Act of 1980 (CERCLA); the Superfund Amendments and Reauthorization Act of 1986 (SARA); and, as required by CERCLA/SARA, all other applicable or relevant and appropriate requirements (ARARs)--in particular, the Resource Conservation and Recovery Aqt of 1976 (RCRA) and the Hazardous and Solid Waste Amendments of 1984 (HSWA). These activities include: determination of the presence, nature, magnitude, and extent of environmental' (air, sediment, surface water, soil, and groundwater) contamination at the 37 NAS Pensacola sites; compilation of the cultural, biological, climatological, hydrogeological, geochemical, hydrogeochemical, and geotechnical data necessary to perform baseline risk assessments and support the development of feasibility study remedial alternatives;

[Bold items enclosed in brackets denote changes from original text]

Table 2-1

NAS PENSACOLA SITES

Site No.	Site Name/Description
1	Sanitary Landfill
2	Waterfront Sediments Area
3	Crash Crev Training Area
4	Army Rubble Disposal Area
5	Borrow Pit
6	Fort Redoubt Rubble Disposal Area
7	Firefighting School Area
8	Rifle Range Disposal Area
9	Navy Yard Disposal Area
10	Commodore's Pond
11	North Chevalier Disposal Area
12	Scrap Bins
13	Magazine Point Rubble Disposal Area
14	Dredge Spoil Fill Area
15	Pesticide Rinsate Disposal Area
16	Brush Disposal Area
17	Transformer Storage Yard
18	PCB Spill Area
19	Fuel Farm Pipeline Leak Area
20	Pier Pipe Leak Area
21	Sludge at Fuel Tanks Area
22	Refueler Repair Shop
23	Chevalier Field Pipe Leak Area
24	DDT Mixing Area
25	Radium Spill Area
26	Supply Department Outside Storage Area
27	Radium Dial Shop Sewer
28	Transformer Accident Area
29	Soil South of Building 3460
30	Buildings 649 and 755
31	Soil North of Building 648
32	IWTP Sludge Drying Beds
33	WWTP Ponds
34	Solvent Area North of Building 3557
35	Miscellaneous IWTP SWMUs
36	Industrial Waste Sever
37	Sherman Field Fuel Farm

[Bold items enclosed in brackets denote changes from original text]

0001319

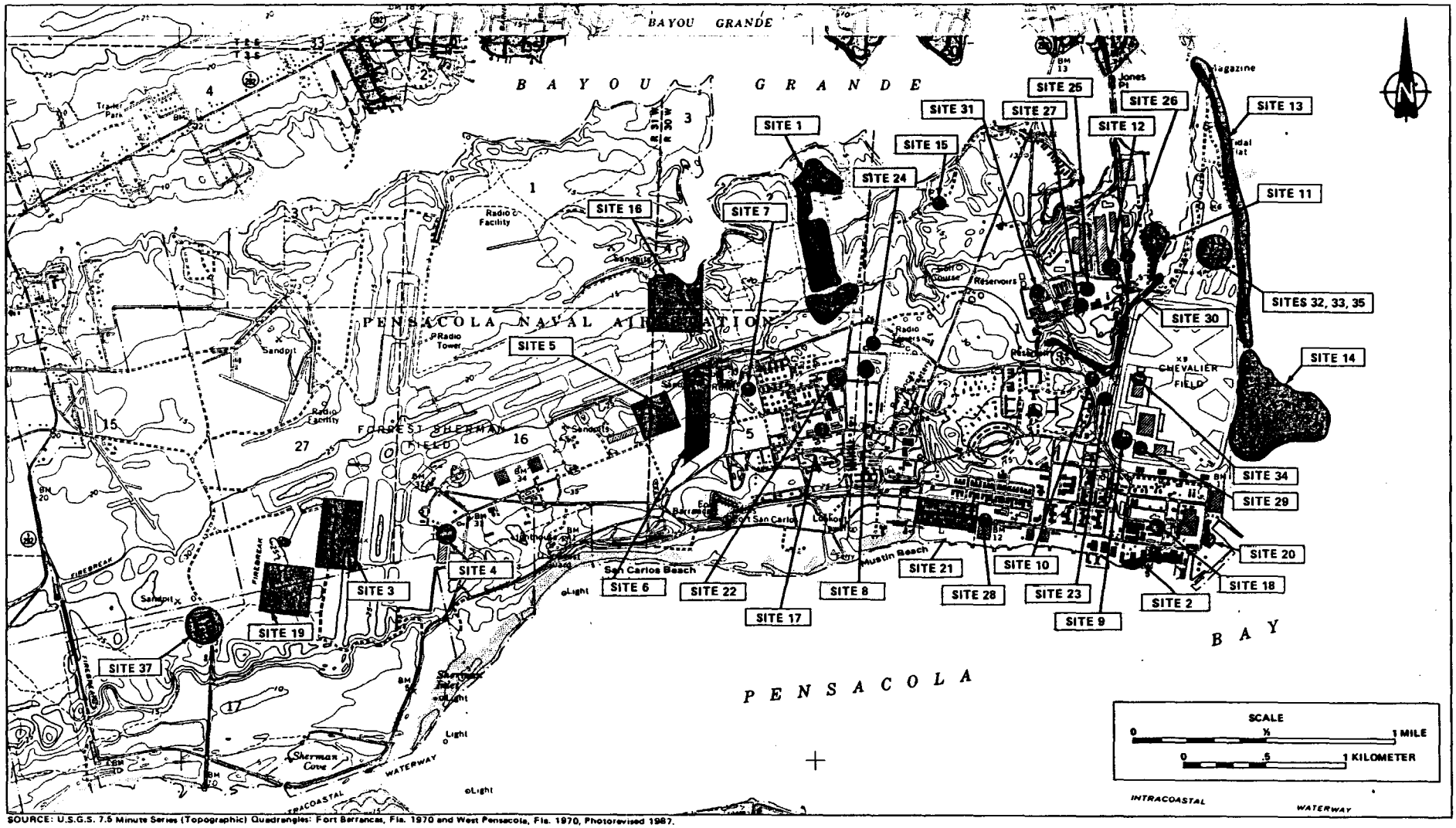

SOURCE: U.S.G.S. 7.5 Minute Series (Topographic) Quadrangles: Fort Barrancas, Fla. 1970 and West Pensacola, Fla. 1970, Photorevised 1987.

Figure 2-2 NAS PENSACOLA SITE LOCATIONS

remedial design; and/or construction oversight of selected remedial designs. Given the extremely varied nature of hazardous materials used and potentially disposed of on the base, it is possible that any of the following environmental contaminants may be detected: full spectrum of priority pollutant and [Target] Compound List species (i.e., metals, cyanide, volatile organics, base/neutral and acid extractables, polychlorinated biphenyls, and pesticides); petroleum hydrocarbons; asbestos; and radioactive materials.

[Bold items enclosed in brackets denote changes from original text]

3.0 WORK PLANS AND SITE-SPECIFIC QUALITY ASSURANCE PROJECT PLANS

As discussed in Section 1.0, the purpose of this GQAPP is to delineate E & E's approach to ensuring the quality of all technical data generated during the investigations at NAS Pensacola. Given the large number and variety of sites at NAS Pensacola, it is hence necessary that this GQAPP describe the full spectrum of potential investigation methodologies and analytical procedures. However, given that all of the investigation methodologies and analytical procedures described herein will not be required on every site, it is also necessary that a mechanism for delineating site-specific investigation methodologies and analytical procedures be implemented. Work plans and SQAPPS constitute this mechanism.

The work plans generated for the NAS Pensacola investigations will include the following:

- Site background information;
- Summary of results of previous investigations;
- Site location, vicinity, and plan maps;
- Identification of investigation approach and methodologies;
- Proposed sampling locations and sample location maps; and
- Summary of sample types, number, and analytical parameters.

For simplicity, the 37 sites at NAS Pensacola have been divided into 15 work plan groups (see Table 3-1). These groupings were determined based on geographic proximity of the sites, similarity of potential contaminant types, similarity of potential investigation methods, and/or the potential scope and complexity of the investigation. Appendix A presents a generalized work plan outline.

[Bold items enclosed in brackets denote changes from original text]

Table 3-1

NAS PENSACOLA WORK PLAN GROUPS

Work Plan Group	Site Nos.	Site Name/Description
A	1	Sanitary Landfill
B	11	North Chevalier Disposal Area
	12	Scrap Bins
	26	Supply Department Outside Storage Area
C	2	Waterfront Sediments
	13	Magazine Point Rubble Disposal Area
	14	Dredge Spoil Fill Area
D	15	Pesticide Rinsate Disposal Area
	24	DDT Mixing Area
E	30	Buildings 649 and 755
F	9	Navy Yard Disposal Area
	10	Commodore's Pond
	23	Chevalier Field Pipe Leak Area
	29	Soil South of Building 3460
	34	Solvent North of Building 3557
G	25	Radium Spill Arta
	27	Radium Dial Shop Sewer
E	8	Rifle Range Disposal Area
	22	Refueler Repair Shop
I	17	Transformer Storage Yard
	18	PCB Spill Area
	28	Transformer Accident Area
J	3	Crash Crew Training Area
	19	Fuel Farm Pipeline Leak Area
	37	Sherman Field Fuel Farm
K	7	Firefighting School Area
	20	Pier Pipe Leak Area
	21	Sludge at Fuel Tanks Area
L	4	Army Rubble Disposal Area
	5	Borrow Pit
	6	Fort Redoubt Rubble Disposal Area
	16	Brush Disposal Area
M	31	Soil North of Building 648
N	36	Industrial Waste Sewer
O	32	IWTP Sludge Drying Beds
	33	WWTP Ponds
	35	Miscellaneous IWTP SWMUs

(Bold items enclosed in brackets denote changes from original text]

0001321

A separate SQAPP for each site within a work plan group will be included as an appendix to the work plan. The SQAPP will identify the following:

- Site-specific sampling/analytical requirements, including number, type, and analyses of field and laboratory QA samples;
- Site-specific data quality objectives (DQOs), including detection limits; and
- Any modifications to any of the procedures specified in the GQAPP.

Appendix B presents an example SQAPP form.

[Bold items enclosed in brackets denote changes from original text]

4.0 PROJECT ORGANIZATION AND RESPONSIBILITY

In accordance with E & E's corporate QA program, experienced senior technical staff will be assigned to the NAS Pensacola project to provide QA guidance and review. E & E's corporate management structure provides for direct and continuous oversight responsibility, clear lines of authority, and the integration of QA activities. The primary U.S. Navy contacts at E & E with respect to the QA program for the NAS Pensacola project will be:

- Mr. Richard J. Rudy, P.G.
  Senior Project Director
  Ecology and Environment, Inc.
  1203 Governor's Square Blvd., Suite 401
  Tallahassee, Florida 32301
  (904) 877-1978

- Mr. Andrew P. Clifton
  ASC Laboratory Director
  Ecology and Environment, Inc.
  Analytical Services Center
  4285 Genesee Street
  Buffalo, New York 14225
  (716) 631-0360

Figure 4-1 presents the basic organizational structure of E & E's QA program, and Figure 4-2 shows the basic management structure of the ASC. Section 4.1 identifies the key personnel for the NAS Pensacola project and summarizes their QA/QC responsibilities. Section 4.2 describes the facilities and analytical capabilities of the ASC. Biographies of key personnel are presented in Appendix C.

[Bold items enclosed in brackets denote changes from original text]

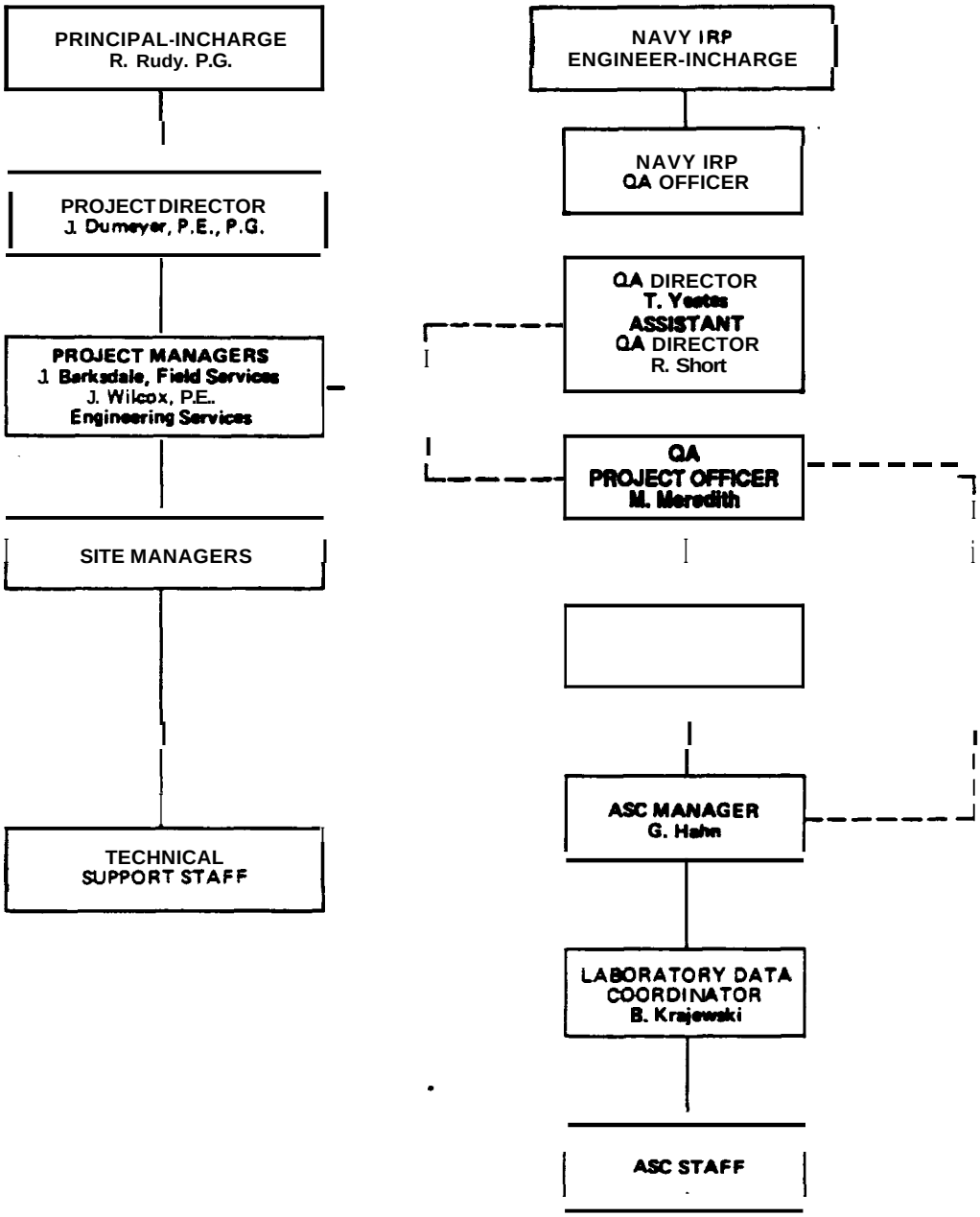

Figure 4–1 QUALITY ASSURANCE/QUALITY CONTROL PROGRAM ORGANIZATION

0001323

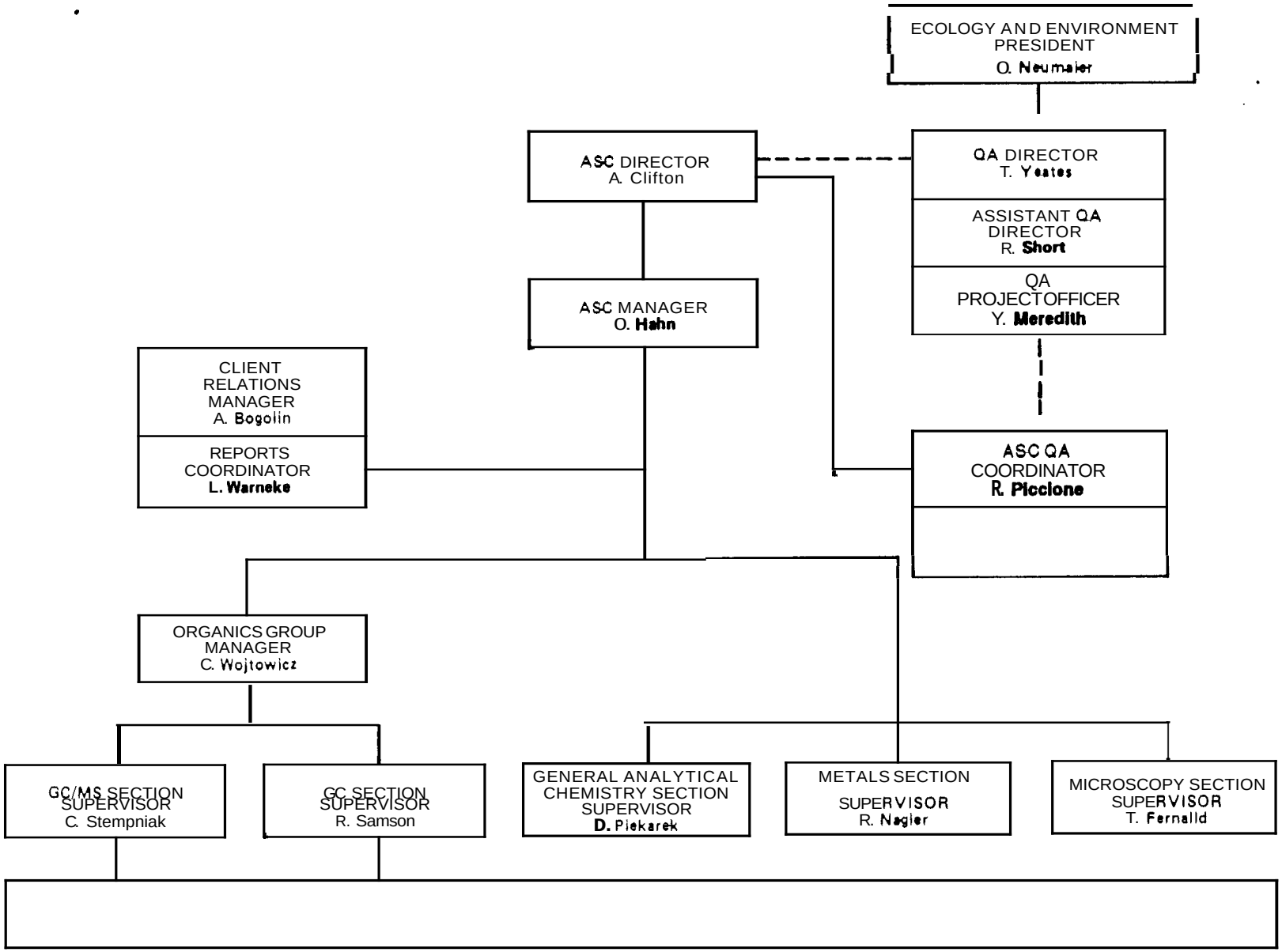

Figure 4–2 ANALYTICAL SERVICES CENTER MANAGEMENT ORGANIZATION

4.1 KEY PROJECT PERSONNEL

Principal-in-Charge. The principal-in-charge for the NAS Pensacola project will be Richard J. Rudy, P.G., manager of E & E's Regional Office in Tallahassee. As principal-in-charge, Mr. Rudy will be ultimately responsible for ensuring that all field/analytical data and technical reports generated during the project are in compliance with all applicable QA/QC requirements.

Project Director. The project director for the NAS Pensacola project will be John M. Dumeyer, P.E., P.G., from E & E's Regional Office in Tallahassee. As project director, Hr. Dumeyer will have overall responsibility for ensuring that all technical and administrative aspects of the the project meet U.S. Navy objectives and are in compliance with all applicable QA/QC requirements. The project director also provides access to corporate management for the project managers.

Project **Managers.** The project managers for the NAS Pensacola project will be John D. Barksdale (Field Services), from E & E's Regional Office in Tallahassee, and Jack B. Wilcox, P.E. (Engineering Services), from E & E's corporate headquarters in Buffalo. As project managers, Hr. Barksdale and Mr. Uilcox will be responsible for the actual implementation of the project and will have the authority to commit the resources necessary to meet project objectives and requirements. Their primary function is to ensure that all technical, financial, and scheduling objectives of the project are achieved successfully. As project managers, Mr. Barksdale and Mr. Uilcox will report directly to the Navy IR Program Engineer-In-Charge (EIC) and will represent the major point of contact for project-related matters. They will specifically be responsible for:

- Defining overall project objectives;
- Defining specific task objectives;
- Establishing policy and procedures to ensure project and task objectives are met;

[Bold items enclosed in brackets denote changes from original text]

- Establishing schedules for the project as a whole and for individual tasks;
- Developing detailed work plans;
- Obtaining technical and corporate resources as needed to ensure performance within budget and schedule constraints;
- Directing all site managers and technical support staff;
- Supervising and reviewing the implementation of all work;
- Approving all external reports (deliverables) prior to submittal to the Navy IR Program EIC; and
- Representing the project team at meetings and public hearings.

Site Managers. The project managers will be supported by site managers, who will be responsible for implementing the investigation of the specific site to which they have been assigned. The site managers will specifically be responsible for:

- Coordinating with the project managers on a day-to-day basis;
- Implementing the site work plan;
- Meeting site investigation technical and QA objectives;
- Completing site work within schedule and budget guidelines;
- Coordinating and managing site support staff;
- Coordinating and managing site subcontractors;
- Preparing/reviewing all site-related reports; and
- Identifying problems at the team level and implementing solutions developed in conjunction with the project managers.

Technical Support Staff. The technical support staff (team members) for this project will be drawn from E & E's pool of corporate resources. The technical support staff will be utilized by the project managers and site managers to implement project and site tasks, analyze data, and prepare task reports/support materials. All support personnel assigned to the NAS Pensacola project will be experienced professionals who possess the degree of specialization and technical competence required to effectively and efficiently perform the required work.

[Bold items enclosed in brackets denote changes from original text]

QA Director and Assistant **QA** Director. The QA director for the NAS Pensacola project will be Thomas Yeates, and the assistant QA director will be Russell J. Short. As the corporate personnel responsible for ensuring compliance with E 6 E's Corporate QA Program, **Mr.** Yeates and **Mr.** Short will remain independent of direct project involvement on a day-today basis, but will have the responsibility for ensuring that all project-, site-, and task-specific QA/QC requirements are met. They will have direct access to corporate executive staff as necessary to resolve any QA/QC problems, disputes, or deficiencies. Their specific functions and duties will include:

- Reviewing and approving all QA policies and procedures;
- Conducting QA program indoctrination sessions for senior project staff;
- Providing guidelines and information to assist in the development of project-, site-, and task-specific QA/QC policies and procedures;
- Reviewing and approving all project-related subcontracting and other procurement documents to ensure' inclusion of QA/QC requirements;
- Reporting regularly to the corporate executive staff on the adequacy, status, and effectiveness of the project QA program;
- Maintaining corporate files of all project-related QA/QC documents (memoranda and communication records);
- Maintaining a file of individuals who are qualified as QA personnel (qualifications, perforaancc records, and current project assignments); and
- Conducting random field and file audits to ensure that all required QA/QC procedures are being properly implemented.

QA Project Officer. The QA project officer for the NAS Pensacola project will be **[Marcia Meredith]**. As QA project officer, Hs. **[Meredith]** will be responsible the direct oversight of project-, site-, and task-specific QA/QC activities. Her specific functions and duties will include:

- Providing external (to the ASC) review of analytical activities;

[Bold items enclosed in brackets denote changes from original text]

- Coordinating with U.S. Navy QA officers, E & E's project managers, ASC management, and ASC staff to ensure that QA objectives appropriate to the project are set and that ASC personnel are aware of these objectives;
- Coordinating with ASC management and staff to ensure that QC procedures appropriate to demonstrating data validity sufficient to meet QA objectives are developed and in place;
- Coordinating with ASC QA staff to ensure that all QC procedures are followed and documented;
- Recommending, implementing, and/or reviewing actions taken in the event of QA/QC failures; and
- Reporting non-conformance with either QC criteria or QA objectives (including an assessment of the impact on data quality or project objectives) to the project managers.

Analytical Services Center (ASC) Director. The ASC director is Andrew P. Clifton. As ASC director, Mr. Clifton is responsible for all analytical activities. Be will closely coordinate with the QA project officer and corporate QA unit regarding all analytical QA/QC requirements. His specific functions and duties include:

- Maintaining indexed master copies of all laboratory project records and final reports which will list for each site the number of samples and media; sample receipt date, extraction date, analysis date, analytical instruments and methodology employed, current status, and status of final report;
- Maintaining copies of the E & E's methods and safety manual;
- Conducting inspections in conjunction with the corporate QA unit and keeping written records of the inspections; for projects lasting less than six months, the corporate QA unit conducts at least one inspection; for projects lasting more than six months, inspections are conducted at least every three months;
- Maintaining written status reports on the project which note any problems, recommendations, and corrective actions taken; and
- Ensuring that all final reports are reviewed for accuracy.

ASC Manager. The ASC manager is Gary E. Hahn. As ASC manager, Mr. Hahn closely coordinates with the ASC director regarding QA elements of specific sample analysis tasks. He reports to the ASC director and

[Bold items enclosed in brackets denote changes from original text]

works in conjunction with the QA project officer and corporate QA unit. His specific functions and duties include:

- Developing project-, site-, and task-specific protocols in conjunction with the ASC director;
- Ensuring that ASC staff clearly understand their required tasks;
- Ensuring that analyses are carried out in accordance with the specified protocol;
- Ensuring that all QA/QC methods are followed;
- Ensuring that all data generated during are accurately recorded and verified;
- Ensuring that any problems reported during monitoring by the QA project officer or QA unit are reported to the ASC director, that corrective actions are implemented, and that these actions are docuaented; and
- Ensuring that the study protocol, as well as the final report and all supporting rav data, are transferred to suitable archives upon completion of the study.

ASC QA Coordinator. The ASC QA coordinator is **[Ray Piccione]**. As ASC QA coordinator, **[Mr. Piccione]** is responsible for overseeing the QA prograa within the ASC, including the maintenance of all QC documentation. Although **[Mr. Piccione]** reports directly to the ASC director, in conjunction with the corporate QA unit [he] has the authority to stop work on any project in which the QC requirements are not being satisfied. [His] specific functions and duties include:

- Conducting independent reviews of randomly chosen laboratory data (up to 20% of the total);
- Reviewing and approving all QC procedures, documentation, and corrective actions;
- Reporting QA/QC problems to the laboratory and corporate QA unit;
- Reporting of QA/QC information and/or problems to the manager in monthly progress report;
- Maintaining the E & E SOP and ASC QA/QC manuals; and
- Conducting internal laboratory performance audits.

[bold items enclosed in brackets denote changes from original text]

Laboratory Data Coordinator. The ASC laboratory data coordinator is Barbara J. Krajewski. As ASC laboratory data coordinator, Ms. Krajewski is responsible for the oversight of USEPA CLP projects and other projects that involve CLP data requirements. She also serves as a liaison between the ASC director and field personnel. Her specific functions and duties include:

- Informing ASC personnel of all contract-specific QA/QC requirements, such as detection limits, QC checks, and so on;
- Keeping track of CLP sample shipping dates;
- Verifying the receipt of all required CLP samples;
- Project tracking/control of CLP samples within the ASC; and
- Overseeing data package preparation.

ASC Staff. Each member of the ASC staff performs an assigned QA/QC or analytical function that is pertinent to, and within the scope of, his or her knowledge, experience, training, and aptitude. An individual is assigned the responsibility for checking, reviewing, or otherwise verifying that a sample analysis activity has been correctly performed. The following is a breakdown of analytical areas and their assigned personnel (Appendix D presents a complete ASC staff list; biographies of key managerial and supervisory personnel are presented in Appendix C): (Training procedures for analysts are included in Appendix I.]

- Organics Group: Caryn Wojtowicz -- Group Manager.

  -- GC/MS: Cindy Stempniak -- Supervisor; Mike Scanlon, Joseph Bitka, Allen Hawker, Lynn Hess, Marvin Ingalsbe, Peter Mitchell -- Analysts.

  -- GC: Richard Samson -- Supervisor; Deborah Andrusko, Bob' Ganger, Francis Ginah, Marnie Greenbie, Kathy Willy -- Analysts.

- Inorganics Group: Gary Hahn -- Acting Group Manager.

  -- Metals: Rich Nagler -- Supervisor; Jim Olka, Mike Potter, Patricia Rosiek -- Analysts.

  -- General Analytical Chemistry: Dietmar Piekarek -- Supervisor; Paul Azzopardi, Dan Atherton, Thomas Gardner-Clayson, Seema Bhambhani -- Analysts.

[Bold items enclosed in brackets denote changes from original text]

-- Microscopy: Thomas Fernalld -- Supervisor; Dan Fournier, Lisa Ende, Kathy Murphy -- Analysts.

4.2 ASC FACILITIES AND ANALYTICAL CAPABILITIES

The E & E ASC is a certified chemical and biological laboratory staffed by full-time scientists and technicians. The ASC facility is equipped with state'-of-the-art instrumentation that allows analysis for the full spectrum of soil, sediment, water, air, waste, and biological parameters.

All laboratory work is performed in accordance with guidelines established by the USEPA, U.S. Navy Energy and Environmental Support Activity (NEESA), the American Public Eealth Association (APHA), and/or the American Society for Testing and Materials (ASTM). When approved protocol do not exist, the ASC staff develops and validates appropriate analytical methods.' In addition, QA/QC programs are maintained for both the instruments and the analytical procedures used.

The ASC is currently certified or qualified under several different federal and state programs. A current list of ASC's certifications is provided in Table 4-1.

4.2.1 Equipment

The ASC is equipped with the most advanced instrumentation for fast, accurate analyses of soil, sediment, water, air, waste, and biological samples. Major instruments include:

- Eewlett Packard (HP) 5995C gas chromatograph/mass spectrometer (GC/MS) with dual (packed/capillary) column capability; purchase date 1985.
- HP5970B GC/MSs for capillary column operation, each equipped with a jet separator for packed columns [(five)]; purchase dates 1985 (one), 1986 (one), 1987 (two), [and 1990 (one)].
- HP1000 computers with RTE-6 operating system, equipped with Aquarius software for control and data acquisition for the four GC/MS systems listed above (three); purchase dates 1985 (one), 1986 (one), and 1987 (one).
- HP9144 computer with RTE-A operating system, equipped with Aquarius software for control and data acquisition for one of the GC/MS systems listed above; purchase date 1987.

[Bold items enclosed in brackets denote *changes* from original text]

Table 4-1

ASC CERTIFICATIONS AND QUALIFICATIONS

U.S. Air Force	Approved for analysis of samples in connection with Installation Restoration Program, Phase 11, Confirmation Studies (wastewater, solid waste, and hazardous/toxic waste evaluations).
U.S. Army Corps of Engineers	Approved for analysis of samples in connection with federal Superfund remedial design and construction projects, and for Department of Defense Environmental Restoration Program.
U.S. Department of the Navy	Final program certification: analysis of hazardous waste parameters. Interim program certification: Navy Assessment and Control of Installation Pollutants (NACIP) Program.
U.S. Environmental Protection Agency (USEPA)	Contract Laboratory Program (CLP) proficiency for organic and inorganic analysis of samples from nationwide hazardous waste sites.
National Institute of Occupational Safety and Health	Proficiency analytical testing program (PAT); overall proficiency in metal, solvent, and airborne asbestos analysis.
National Institute of Standards and Technology	National Voluntary Laboratory Accreditation Program; interim approval for bulk asbestos analysis.
American Industrial Hygiene Association	Accreditation for general analyses, including asbestos.
New York State Department of Environmental Conservation	Approved for analysis of samples associated with state-sponsored Superfund activities. Requires successful completion of proficiency sample analysis.

[Bold items enclosed in brackets denote changes from original text]

Table 4-1 (Cont.)

New York State Department of Eealth	Certified for analysis of potable and nonpotable water, solid hazardous waste and air emissions for metals, organics, inorganics, pesticides, and bacteriology. Requires successful completion of proficiency sample analysis.
Nev York State Department Transportation	Approved for analysis of hazardous material spill samples.
State of California Department of Eealth Services	Certificate No. 161 for hazardous waste testing for partial organics, full inorganics, and bulk asbestos; as well as waste extraction test.
State of Connecticut Department of Eealth Services	Approval as a public health laboratory for potable water, wastewater, and air testing.
State of Florida Department Environmental Regulation	Certified for analysis of drinking water, wastewater, and hazardous waste site samples pursuant to state-wide laboratory QA/QC program.
State of Illinois Environmental Protection Agency	Certification/approval for analysis of organic/inorganic chemical parameters in accordance with USBPA CLP.
State of Kansas Department Eealth and Environment	Certification for inorganic, physical, chemical, and organic analyses; and hazardous material characterization.
State of Michigan Department of Public Health	Certification for analysis of drinking water and wastewater.
State of South Carolina Department of Health and Environmental Control	Reciprocal certification with California Certificate No. 161 for partial organics, full inorganics, bulk asbestos, and waste extraction test. Requires successful completion of proficiency sample analyses.
State of Utah Department of Health	Certifications as environmental chemistry laboratory.
State of Wisconsin Department Natural Resources	Certification for full organics and of inorganics and general III categories.

[Bold items enclosed in brackets denote *changes* from original text]

[o Tekmar LSC-2000 liquid sample concentrators for volatile organic analysis (three); purchase date 1989.]

- o Tekmar LSC-2 liquid sample concentrators for volatile organic analysis [(five)]; purchase dates 1984 (one), 1985 [(one)], 1986 (two), and 1987 (one).
- o Tekmar Model 4200 automatic heated sampler module for volatile soil analysis (two); purchase dates 1985 (one) and 1988 (one).
- o Tekmar Model 5010 thermal desorber for desorption of volatile components from air trap tubes (two); purchase dates 1987 (one) and 1988 (one).
- o Varian Model 3700 GC with flame ionization, Hall, and electron capture detectors; purchase date 1980.

[o Varian Model 3400 GC with dual electron capture detectors (eight); lease date 1989.1

- o Varian Vista 6000 GCs with electron capture and flame photometric, photoionization, flame ionization, and Hall detectors as well as capillary capability (five); purchase dates 1984 (one), 1985 (one), 1986 (two), and 1987 (one).
- o HP5890 GC equipped with electron capture and flame ionization detectors; purchase date 1985.
- o Varian DS654 data system for processing data from up to four GC detectors; purchase date 1987.
- o Varian DS604 data systems for processing data from up to eight GC detectors (two); purchase dates 1986 and 1987.
- o Varian 4270 computing integrator; purchase date 1985.
- o Spectra-Physics (SP) 4100 and SP4270 computing integrators (two); purchase dates 1980 and 1984.

[o HP Series - 1050 high performance liquid chromatograph with programmable fluorescence and variable ultraviolet detectors; purchase date 1990.]

- o Perkin-Elmer (PE) Plasma II inductively coupled argon plasma, computer-controlled, high-speed, high-resolution spectrometer with PE7500 laboratory computer; purchase date 1985.
- o PE 5000 Zeeman fully automated atomic absorption spectrophotometer (AAS) with furnace atomizer, Zeeman background correction system, and autosampler; purchase date 1984.
- o PE 3030 Zeeman AAS, fully automated for furnace analysis; purchase date 1987.

[o PE 2830 AAS, configured for cold vapor mercury analysis; purchase date 1989.1

[Bold items enclosed in brackets denote changes from original text]

- Dionex 2000i ion chromatograph with conductivity detector for anion analysis and with integrating recorder; purchase date 1987.
- PE700 infrared spectrophotometer with thermopile detector and filter-grating monochromator; purchase date 1985.
- Kjeltec Auto 1030 analyzer for ammonia and total Kjeldahl nitrogen by automated distillation and colorimetric determination of titration endpoint; purchase date 1987.
- Bausch and Lomb Spectronic 601 for all spectrophotometric measurements; purchase date 1987.
- MEI (COSA), TOX-10 for total organic halogen analysis; purchase date 1985.
- Horibra, PIR2000 for total organic carbon analysis; purchase date 1985.
- Zeiss phase-contrast microscopes equipped for airborne fiber analysis (two); purchase date 1983.
- Reichert-Jung phase-contrast microscopes equipped for airborne fiber analysis (two); purchase date 1988.
- Nikon polarized light microscopes for bulk asbestos analysis (three); purchase dates 1987.
- Nikon binocular stereomicroscope for bulk asbestos examination; purchase date 1988.

In addition to the above, the ASC has available eight terminals and various printers connected to a multi-user Laboratory Management Information System (LABMIS) running on a Digital Equipment Corporation VAX 8700 at E & E's corporate headquarters. The ASC also has available a Mielabor Hiele, 67733 dishwasher for metals and general analytical glassware, as well as specific ion electrodes (fluoride, cyanide, nitrate, ammonia), integrators, and such other basic items as pH and conductivity meters.

4.2.2 Analytical Capabilities

The ASC is fully equipped for the analysis of all types of soil, sediment, water, air, waste; and biological samples for chemical contaminants, bacteriological quality, and general characterization. Proven and approved analytical techniques are used, backed up by a rigorous system of QA/QC checks to ensure reliable and defensible data.

[Bold items enclosed in brackets denote changes from original text]

001329

Organic analysis is accomplished by GC, [high performance liquid chromatography **(HPLC)**], and/or GC/MS. Soil, sediment, water, air, waste, and tissue samples are analyzed routinely for volatile organics, extractable organics, pesticides, polychlorinated biphenyls (PCBs), and other groups of compounds, as necessary. For the extraction of samples, the ASC utilizes separatory funnel or sonication methods routinely, and Soxhlet or continuous extraction methods when necessary.

The ASC uses two types of instrument for analysis of metals in various matrices: AAS and ICAP. The various AAS techniques include application of flame, furnace, and cold vapor generation procedures. During sample preparation and analysis, ASC staff are especially careful to avoid the matrix interference effects to which the analysis of solid samples (soil, sediment, and sludge) for trace metals is particularly susceptible. Check standards (either USEPA-provided or National Institute of Standards and Technology [NIST]-traceable) are used with each set of prepared samples.

[Bold items enclosed in brackets denote changes from original text]

5.0 QA OBJECTIVES FOR MEASUREMENT DATA

Table 5-1 summarizes the five general levels of analytical data quality that the USEPA has identified as being potentially applicable to site investigations conducted under CERCLA. In the document entitled "Sampling and Chemical Analysis Quality Assurance Requirements for the Navy Installation Restoration Program," NEESA specifies three general levels of analytical data quality (equivalent to USEPA Levels III, IV, and V) that are applicable to investigations of naval facilities. These levels are summarized below:

- Level C (USEPA Level 111) is applicable to sites not included on the National Priorities List (NPL) and not likely to undergo litigation, but located near populated areas; EPA-approved methods without a data package, but validated against CLP criteria, are required.
- Level D (USEPA Level IV) is applicable to NPL sites that are likely to undergo litigation; full CLP methods and validation, together with all CLP deliverables, are required.
- Level E (USEPA Level V) is applicable to non-NPL sites in a non-populated area; EPA methods or equivalent are required.

The site investigations at NAS Pensacola will incorporate NEESA Level C and D analytical data quality, as well as USEPA Levels I and II analytical data quality. Based on the QA/QC requirements specified by the USEPA and NEESA for the various levels of analytical data quality, Level C will be considered equivalent to SW-846, Third Edition, requirements; and Level D will be considered equivalent to CLP requirements. USEPA Levels I and II analytical data quality will be applicable only during the initial phase(s) of specific site investigations when samples will be subjected to analytical screening for the purposes of overall site characterization and selection of formal sampling/analysis locations. The specific level(s) of analytical

[Bold items enclosed in brackets denote changes from original text]

Table 5-1

USEPA GENERAL LEVELS OF ANALYTICAL DATA QUALITY

LEVEL	DATA USES	TYPE OF ANALYSIS
I	—Site Characterization —Monitoring during Implementation	—Total Organic/Inorganic Vapor Detection Using Portable Instruments —Field Test Kits
II	—Site Characterization —Evaluation of Alternatives —Engineering Design —Monitoring during Implementation	—Variety of Organics by GC; Inorganics by AA and XRF —Identification only Tentative, but Analyte-Specific —Detection Limits Vary from Low Parts per Million to Low Parts per Billion
III	—Risk Assessment —Potentially Responsible Party (PRP) Determination —Site Characterization --Evaluation of Alternatives —Engineering Design --Monitoring during Implementation	—Organics/Inorganics Using USEPA Procedures other CLP can be Analytc-Specific —RCRA Characteristic Tests
IV	—Risk Assessment —PRP Determination —Evaluation of Alternatives —Engineering Design	—HSL Organics/Inorganics by GC/MS, AA, and ICP —Low Parts per Billion Detection Limit
V	—Risk Assessment —PRP Determination	don-Conventional Parameters —Method-Specific Detection Limits —Modification of Existing Hethods —Appendix 8 Parameters

[Bold items enclosed in brackets denote changes from original text]

data quality required fdr any site or task will be ultimately decided upon by the Navy IR Program EIC.

The selection of data quality objectives (DQO) for any site or task will follow the three-stage process outlined in the USEPA document, Data Quality Objectives for Remedial Response Activities. The DQOs are dictated by general level of analytical data required and may change throughout the remediation of any site depending on the data uses and needs.

In analytical terms, the DQOs for Level C and Level D are specified in Section 8, Analytical Procedures. For Level II analyses, the DQOs vary greatly depending on the site, type of compounds under investigation, and the methods available for the analytical screening of these compounds. All screening methods should be validated before use and the DQOs rigorously established in conjunction with the US Navy EIC.

All measurements will be made so as to ensure that the analytical results are representative of the media and conditions measured. Unless otherwise specified, all data will be calculated and reported in units consistent with those used by other organizations reporting similar data to allow comparability of data bases. Data will be reported in micrograms per liter (µg/L) and milligrams per liter (mg/L) for aqueous samples; micrograms per kilogram (µg/kg) and milligrams per kilogram (mg/kg) for soil/sediment samples; or otherwise as applicable. Data for CLP analyses of soil samples will be reported in dry weight; all other data for soil samples will be reported on an as-received basis unless percent solid analysis and dry weight reporting are requested.

There are five characteristics of major importance with respect to the assessment of generated data. These characteristics are defined in Sections 5.1.

- Accuracy;
- Precision;
- Completeness;
- Representativeness; and
- Comparability.

[Bold items enclosed in brackets denote changes from original text]

5.1 DEFINITIONS

5.1.1 Accuracy

Accuracy is the degree of agreement of a measurement or the average of several measurements with an accepted reference or "true" value; it is a measure of bias in the system.

5.1.2 *Precision*

Precision is the degree of mutual agreement among individual measurements of a given parameter under the same conditions.

5.1.3 Completeness

Completeness is a measure of the amount of valid data obtained from a measurement system compared to the amount expected to be obtained under correct normal conditions.

5.1.4 Representativeness

Representativeness expresses the degree to which data accurately and precisely represent a characteristic of a population, parameter variations at a sampling point, a process condition, or an environmental condition. Careful choice and use of appropriate methods in the field will ensure that samples are representative. This is relatively easy with water or air samples given that the components of these media are homogeneously dispersed. In contrast, soil and sediment contaminants are unlikely to be evenly distributed, and hence it is important for the sampler and analyst to exercise good judgment when collecting a sample.

5.1.5 Comparability

Comparability expresses the confidence with which one data set can be compared to another.

5.2 E & E QA OBJECTIVES

In combination, QA and QC represent a set of procedures designed to produce analytical data of known and measurable quality. A useful distinction between QA and QC can be made as follows: QC represents the set of measurement procedures (spikes, blanks, replicates, calibration, etc.) used to provide overall evidence of the quality of a particular

[Bold items enclosed in brackets denote changes from original text]

analytical batch; QA represents the set of procedures used to ensure that this evidence is available and used properly to evaluate and, if necessary, qualify data quality.

For the specific sites or tasks, E & E will adopt the QA/QC procedures of either the USEPA CLP (as set forth in Exhibit E of the October 1986 Statement of Work [SOW] for organics analysis, February 1980 revision, and SOW 7/87 for inorganics analysis) or the USEPA Office of Solid Waste and Emergency Response (as set forth in Chapter 1 of Test Methods for Evaluating Solid Waste, Third Edition).

5.3 MEASUREMENT OF ANALYTICAL DATA QUALITY

5.3.1 Accuracy

The accuracy of a particular analysis is measured by assessing its performance with "known" (or control) samples. These "knowns" can take the form of USEPA- or NIST-traceable standards (usually spiked into a pure water matrix); laboratory-prepared solutions of target analytes in a pure water or sample matrix; or (in the case of GC or GC/MS analyses) solutions of surrogate compounds which can be spiked into every sample and are designed to mimic the behavior of target analytes without interfering with their determination. In each case, the recovery of the analyte is measured as a percentage, correcting for analytes known to be present in the original sample if necessary (as in the case of a matrix spike analysis). For USEPA- or NIST-supplied known solutions, this recovery is compared to the published data that accompany the solution. For E 6 E-prepared solutions, the recovery is compared to USEPA-developed data or E & E historical data as available. For surrogate compounds, recoveries are compared to USEPA CLP acceptable recovery tables.

If recoveries do not meet the required criteria, then the analytical data for the batch (or, in the case of surrogate compounds, for the individual sample) are considered potentially inaccurate. The analyst or his/her supervisor must initiate an investigation of the cause of the problem and take corrective action. This can include recalibration of the instrument, reanalysis of the QC sample, reanalysis of the samples in the batch, or flagging the data as suspect if the problems cannot be resolved. For highly contaminated samples, recovery

[Bold items enclosed in brackets denote changes from original text]

of matrix spikes may depend on sample homogeneity. As a rule, analyses are not corrected for recovery of matrix spikes or surrogate compounds.

Known samples are generally introduced into an analytical batch (≤ 20 samples) at the direction of the supervisor immediately before extraction or analysis. Known samples are analyzed routinely (i.e., at the frequency specified in the method) or whenever a specific QC problem is encountered. Each laboratory section has SOPs that direct the use of known samples for each method.

5.3.2 Precision

The precision of a particular analysis is measured by assessing its performance with duplicate or replicate samples. Duplicate samples are pairs of samples collected in the field at the same time/location and transported to the laboratory as distinct samples. Given that the identity of duplicate samples is sometimes not known to the ASC and usually not known to bench analysts, their usefulness for monitoring analytical precision at the bench level is limited.

For most purposes, precision is determined by the analysis of replicate pairs (i.e., two samples prepared at the laboratory from one original sample). In replicate analyses, the sample chosen for replication often does not contain target analytes; consequently, quantitation of precision is impossible. For USBPA CLP and SV-846 organic analyses, replicate pairs of spiked samples, known as matrix' spike/matrix spike duplicate samples, are used for precision studies. This has the advantage that two real positive values for a target analyte can be compared. For some general analytical chemistry analyses, spike samples are not applicable and only replicate samples are used.

Precision is calculated in terms of Relative Percent Difference (RPD), which is expressed as follows:

$$RPD = \frac{(X_1 - X_2)}{(X_1 + X_2)/2} \times 100,$$

[Bold items enclosed in brackets denote *changes* from original text]

where X_1 and X_2 represent the individual values found for the target analyte in the two replicate analyses or in the matrix spike/matrix spike duplicate analyses.

RPDs must be compared to the QC acceptance criteria or laboratory control limits for the method. The analyst or his/her supervisor must investigate the cause of RPDs that fall outside stated acceptance limits. This may include, for example, a visual inspection of the sample for nonhomogeneity, analysis of check samples, and/or review of QC results. Follow-up action may include sample reanalysis or flagging of the data as suspect if problems cannot be resolved.

5.3.3 Completeness

Completeness for each parameter is calculated as follows:

$$\text{Completeness} = \frac{\text{Number of successful analyses}}{\text{Number of requested analyses}} \times 100.$$

E & E's target value for completeness is 100% for all parameters; however, a completeness value of 95% is considered acceptable. Incomplete results may arise due to such factors as insufficient sample volume for analysis or, damage to samples during shipment. Incomplete results for requested analyses will be reported to the NAVY EIC in writing with the monthly progress report.

5.3.4 Representativeness

The characteristic of representativeness is not quantifiable. Subjective factors that must be taken into account are as follows:

- The degree of site homogeneity;
- The degree of homogeneity of a sample taken from one point on a site; and
- The available information on which a sampling plan is based.

To maximize representativeness of results, sampling techniques and sample locations are carefully chosen so that they provide laboratory samples representative of both the site and the specific area. Within

[Bold items enclosed in brackets denote changes from original text]

the laboratory, precautions are taken to extract from the sample bottle an aliquot representative of the vhole sample. This includes premixing the sample in the sample container and discarding large pebbles from soil samples.

5.4 QA/QC TARGETS

Target values for detection limit, percent spike recovery and percent "true" value of known check standards, and RPD of duplicates/ replicates are included in Section 9.0 (Analytical Procedures) of this document. It is important to note that tabulated values are not always attainable. For example, high contaminant concentrations, sample nonhomogeneity, and matrix interferences can preclude achievement of target detection limits or other QC criteria. In such instances, the monthly process report to the Navy IR Program BIC will indicate the occurrence and cause of any deviation from the tabulated detection limits or any other noncompliance with specified QC criteria.

[Bold items enclosed in brackets denote changes from original text]

6.0 FIELDWORK AND SAMPLING PROCEDURES

The following sections will describe E & E's approach to implementing the full spectrum of investigation methodologies that may be required for the NAS Pensacola program. As discussed in Section 3.0, site-specific investigation methodologies; sample types, numbers, locations, and analytical parameters; and modifications to any of the procedures specified in this GQAPP will be identified in the work plan and SQAPP developed for each site or site group.

6.1 AIR INVESTIGATION

Ambient air investigations at the NAS Pensacola sites may include:

- Preliminary survey for "hot spot" volatile organic releases and particulate sources;
- Determining background particulate and organic contamination levels and migration pathways; and
- Identifying and quantifying potential air releases for hazardous substances associated with contamination sources.

Air investigations will be implemented in two phases: preliminary assessment and contaminant quantification.

6.1.1 Preliminary Survey

The preliminary assessment will be conducted in conjunction with a thorough reconnaissance of the site prior to the initiation of fieldwork, and will include a survey of surface features and a surface volatile and particulate emissions survey.

The survey of surface coverage features will encompass identification of those areas of the site which are covered by buildings, paved, vegetated, or completely exposed in order to identify potential source areas of volatile and/or particulate emissions. The

[Bold items enclosed in brackets denote changes from original text]

location and extent of the various site surface coverage features, as well as of any areas characterized by visible staining and/or exposed waste materials, will be carefully recorded in the site logbook and mapped in detail. [Conditions that could affect windblown contaminant movement, such as buildings, tree lines, and sparse vegetation, and conditions that could affect the future placement of sampling devices and a site-specific meteorological station, such as asphalt parking lots, will be recorded.] Meteorological conditions will be documented to establish an airborne migration pathway for contaminant releases. Preliminary data [from the surface volatile and particulate emissions surveys] will be reviewed and characterized with respect to historical background information on potential waste types, materials and disposal practices in order to help identify the nature of any detected source areas of volatile organic and/or particulate emissions.

If the results of the preliminary assessment indicate that a given site represents a potential source of airborne volatile and/or particulate contaminants, then the contaminant quantification phase of the air investigation will subsequently be implemented. However, the contaminant quantification phase will not be implemented until surface water, sediment, soil, groundwater, and/or waste samples have been collected from the potential source areas and analyzed. This will allow quantification of airborne contamination to be specifically directed toward site-related contaminants. If necessary, a meteorological station will be set up in conjunction with these earlier sampling phases in order to provide the baseline data on wind direction and speed that will be required for selection of perimeter monitoring locations based on proposed migration pathways. [(USEPA criteria for meteorological stations will be met, and the location of the meteorological station will be based on siting criteria for meteorological stations listed in Appendix J, Section 3 of this plan. In general, the station will be sited in a location predominantly upwind from and adjacent to a site.)]

[As part of the initial reconnaissance, a] surface volatile emissions survey will be performed across selected unpaved areas using a Foxboro Organic Vapor Analyzer (OVA). Readings will be taken from [2] inches above the surface at specified grid points in order to identify

[Bold items enclosed in brackets denote *changes* from original text]

potential source areas of "hot spot" volatile organic releases. A more detailed survey, including readings in the breathing zone, will be conducted across these potential source areas as well as across areas characterized by visible surface staining or exposed waste materials. All sample locations and readings will be carefully recorded in the site logbook and mapped in detail.

To the greatest extent possible, the surface volatile emissions survey will be conducted at a time when ambient air conditions are such that the potential for volatile off-gassing is maximized. The maximum potential for volatile off-gassing occurs when the air temperature exceeds 80°F, the wind speed is below 5 miles per hour (mph), the preceding several days have been characterized by warm, dry weather, [and the sun is shining (providing the necessary solar radiation to adequately warm the soil surface). Readings from the OVA should be compared with readings taken at a location immediately upwind (background location) from the site. Any increase in background readings should be noted.

During the particulate emissions survey, the use of a real-time particulate monitor, such as a Mini-Ram, can be used to screen areas of concern identified during the walk-over survey. Special attention will be given to areas having above-background OVA readings or visible signs of possible surface contamination because such areas may represent a source(s) of particulate contamination which may be transported off site by normal air movement. Readings will be collected using a particulate monitor at both an upwind (background) location and at an immediately downwind location. A comparison will be performed between the average readings for the two locations obtained during 5-minute monitoring periods.

The Mini-Ram real-time particulate monitor uses a light scattering principle to determine a reading between zero and 9.99 milligrams of particulate matter per cubic meter of air; the unit is sensitive to 10 micrograms (0.01 milligram) of particulates per cubic meter of air. The Mini-Ram takes a reading and displays the output every 10 seconds. The unit also calculates the time-weighted average (TWA) from the time

[Bold items enclosed in brackets denote changes from original text]

the unit is turned on until the TVA button is pressed. If a 5-minute monitoring period is implemented, the Mini-Ram will display the average of 30 discrete, 10-second readings when the TVA button is pressed.

Any area vith readings that exceed the USEPA 24-hour primary standard for total suspended particulates of 260 micrograms per cubic meter of air (secondary standard--150 micrograms per cubic meter of air) would be recommended for particulate sampling. In addition, any discrepancy larger than 0.01 milligram between the TVA obtained at the upwind location and the TVA obtained at the downwind location would also indicate the need to consider the site for particulate sampling. (Other factors, such as elevated levels of semi-volatile organics or pesticides indicated by shallow soil analyses might also indicate the need for particulate and/or semi-volatile sampling.)]

6.1.2 Volatile Organic Compounds (VOC) Air Sampling

The method of collecting VOC samples from the air media will be dependent on the following criteria:

- Required detection limits;
- Accuracy and precision required;
- Acceptability of methods;
- Analysis factors;
- Cost; and
- Equipment availability.

VOC collection is achieved utilizing absorption or whole air sampling. The method chosen will be selected based on the following information sources:

- EPA Compendium of Methods for the Determination of Toxic Organic Compounds in Ambient Air (EPA-600/4-84-041);
- EPA Technical Assistance Document for Sampling and Analysis of Toxic Organic Compounds in Ambient Air (EPA-600/4-83-027);

[Bold items enclosed in brackets denote *changes* from original text]

- o E & E SOP for Collection of Ambient Air Samples at Hazardous Waste Sites (March, 1988);

Whole Air Collection

Ambient air is drawn through or pumped into a container (either rigid or non-rigid), over a specific period of time, then sent to a laboratory for analysis. The analytical process can include the injection of whole-air samples or cryogenically concentrating 500 mls of the air sample with subsequent injection into a GC with various detectors including MS.

Different types of collection containers include:

- o Glass syringe' - [Grab samples and screening data only.]
- o Tedlar bags - [Grab samples and soil vapor screening.]
- o Stainless steel canisters - [Primary air sampling method container.]

The use of stainless steel canisters for the collection of whole air samples has become more accepted in the last few years and has replaced tedlar bags and Tenax in many air monitoring programs. EPA Compendium of Methods, Method TO-14, describes the use of canisters in detail [(see Appendix K).]

[Using Method TO-14,] calibration of orifice or mass flow controller is required when using a stainless steel canister, but this will vary with the type and model of system. The tedlar bag system is also checked for constant flow using a primary standard to measure the positive pressure outflow of the sampling pump. All sampling systems are calibrated before and after the sampling period.

Before sampling begins the following points must be addressed.

- o Canister vacuum must be checked and recorded. The vacuum must either be the same as when shipped from the lab, or if evacuating on-site, the vacuum must have an absolute pressure of < 0.05mm Hg.
- o Determine required sample volume, i.e. pressurized versus passivated. Passively filled canisters generally allow filling to approximately two-thirds their volume if a constant sample flow is required, depending on the manufacturer of the mass flow controller. If more sample volume is required, pressurize the canisters.

[Bold items enclosed in brackets denote changes from original text]

- o Flow rates are determined so the canister is filled to less than 88.1 kPa (for subatmospheric), or to no greater than 202 kPa (for pressurized), over the sample period.

Sample volume required for analyses is usually the determining factor in deciding whether or not to pressurize the samples. Many times two or more analyses (different detectors) are required for complete characterization of the samples. When this is the case, passive collection is usually not sufficient, and the more expensive pressurized systems are needed.

Seals on the older canisters may start to leak, resulting in a slow loss of the vacuum. In addition, obtaining samples near "dirty" areas, (i.e., refineries, gas stations, etc.) may result in the canisters becoming contaminated. It is for these reasons that a laboratory supplying the canister be capable of supplying verifiable evidence that the cans are clean and in proper working order, as outlined in Method TO-14. If the collection of a 'dirty" sample is suspected, mark this on the canister with instructions for special decontamination consideration.

Sample canisters should be placed in the breathing zone unless conditions warrant special placement of samples.

Solid Absorbents

Air sampling using solid absorbents is performed by drawing ambient air through a cartridge containing Tenax, activated carbon, or molecular sieve collection media using a battery operated Gillian (or equivalent) sampling pump attached to the sampling media with tygon tubing. The flow rate (in liters) and maximum sample volume collected will be calculated specifically regarding the media used and the contaminant(s) of interest. The sampling pumps will be pre-calibrated and post-calibrated using a primary calibration standard [method], such as Buck or Gillabrator [calibration], to assure the accuracy of the sample volume collected.

The contaminants are absorbed onto the cartridge media in the sampling train from air drawn through at a constant rate for a specific period of time. The sample cartridges are tightly sealed, stored on ice

[Bold items enclosed in brackets denote *changes* from original text]

and shipped to the laboratory where the compounds are thermally desorbed and analyzed [using] the GC/MS. Different types of absorbents include:

- o Organic polymers - Tenax G-C: High boiling (80-200°C) point compounds such alcohols, diols, phenols, amides, aldehydes, ketones, chlorinated aromatics.
- o Organic polymers - XAD-2: Higher boiling point compounds (100°-300°C); mostly used for stack testing.
- o Inorganic absorbents - Molecular sieve: Specific to certain compounds. Molecule diameter matches pore diameter of molecular sieve.
- o Carbon absorbents - Activated carbon: Use primarily with low [molecular weight] compounds; however, sometimes difficult to desorb compounds of concern; [uses solvent extraction that may dilute sample below detection limit.]

Tenax G-C is considered the best all-around absorbent for VOC sampling. EPA's Compendium of Methods, Method TO-1 outlines sample collection using Tenax. In general, the sampling train should be mounted with the sample collection device at approximately 5 feet (breathing zone) unless conditions require otherwise.

Breakthrough is one of the most common problems encountered when absorbents are used [in the presence of high concentrations of volatile organic compounds.] Aside from calculating sampling volume correctly and sample time, a back-up cartridge should also be used as a precaution. **[Many** commercially available cartridges have a second area of sorbent to act as a backup and to determine if **breakthrough** has occurred.**]**

The collection efficiency of VOCs for absorbents is variable. Duplicate samples should always be used to account for this variability. Low flow rates also makes it difficult to detect lbw concentrations of VOCs in ambient concentrations. The use of larger tenax cartridges makes it possible to collect samples for longer periods of time, thus, allowing for a lower detection limit.

For all types of air sampling it is essential that the following information be documented in the field logbook for each volatile organic sample collected:

[Bold items enclosed in brackets denote changes from original text]

Project location
Date
Sampler # and location
Initial flow rate in mls/min, Qri, which is the average of five observed values.
Final flow rate in mls/min, Qrf, the average of five observed values.
Average flow rate in mls/min, Oav = (Qri + Qrf)/2
Temperature
Barometric Pressure
Relative Humidity
Sample #
Time on
Time off
Total sample time
Picture #
Chain of custody #

Other meteorological conditions such as wind direction, estimated wind speed, amount of rainfall, cloud cover, etc., will be recorded in the field logbook at least twice daily during sampling.

6.1.3 Particulate Air Sampling

Based on preliminary screening with a particulate monitor such as the Mini-Ram, which measures. total suspended particulate (TSP) concentrations in the ambient air, and soil screening data, air sampling may be performed to determine the specific qualitative and quantitative concentrations of airborne contaainants. Sampling methodologies can be designed to collect TSP samples for inorganic and semi-volatile organic analyses or the respirable fraction only of the TSP inorganics. These sampling methods utilize either a high-volume (Hi-Vol) sampler [(1 cubic meter/minute)] or a Gillian Hi-Vol pump ((20 liters per minute)].

Hi-Vol Samplers

High-volume (hi-vol) air samplers are used in the ambient environment to collect suspended particulates for trace metal analysis. Of primary concern at most sites are airborne concentrations of [heavy metals such as] lead, cadmium, arsenic and other toxic elements.

All historical eeteorolagical data and site reconnaissance should be used to determine optimal sampler locations for upwind/downwind

[Bold items enclosed in brackets denote changes from original text]

sampling.. [Unless othervise dictated by site conditions, the inlet to the hi-vol samplers will be located 2 meters above the ground surface.] The hi-vol samplers should be positioned around the site at four locations. The samplers are placed approximately twenty feet from the source of contamination. Duplicate or co-located total suspended particulate (TSP) or respirable fraction particulate (SSI) samplers are set two to four meters apart with roof peaks aligned in the same direction. One of the samplers is designated as primary, and the other as duplicate. According to the siting criteria in 40 CFR Part 58, a hi-vol positioned two meters above the ground surface should be at least twenty-five meters from the edge of the nearest traffic lane of any roadway. The air inlet of the sampler should be two meters above ground surface in the adult breathing zone. Hi-vols should be placed at a distance from structures which is at least twice their height.

The hi-vol samplers require standard electrical power which can be supplied from local businesses or residences, or from portable generators. If generators are used, the maximum sample period is approximately twelve hours. The hi-vol should be at least fifty feet from a gasoline powered generator and the generator placed downwind of the hi-vol, to prevent exhaust contamination of the samples. The possibility of variable wind directions will be considered when locating generators and monitoring hi-vol samplers. Generators using unleaded fuel are preferred.

Other factors to consider during siting include activity on or around the site. Construction or remedial activities may disrupt the sampling procedure and result in a non-representative sample. In addition to the siting of hi-vol units adjacent to the study area, a unit must be designated to collect background samples. Because it is used for comparison with concentrations in samples from the hazardous waste site, great care will be exercised in the selection of the background sampling location. The sampler would be located upwind of the contaminant source, at a remote location 0.25 to 1.0 miles from the site, and in the same airshed as the site. According to MITRE Corporation, the sampler will meet HRS criteria as a background location

[Bold items enclosed in brackets denote changes from original text]

if it is laterally removed from the site rather that directly upwind. The criteria is that the background sampler characterizes ambient conditions not due to the site and that it screens out alternate sources of contamination. [Appendix L contains general air sampling location guidelines.]

After determining the proper sampling location, four angle iron legs should be driven into the ground, and the hi-vol unit attached with bolts and leveled. Power connections should be secured inside the housing.

Before using any hi-vol unit in the field, operational and calibration checks should be completed to ensure that it is fully functional. The hi-vol should be equipped vith a motor/blower, flow controller, elapsed time indicator, programmable timer, flow recorder urd filter holder assembly. Minimally, a working motor/blower unit and flow recorder is required. Timing and on-off operation can be done manually if necessary.

The motor/blower unit should be removed and inspected. All wires should be properly connected. Motor brushes last for 400 to 500 hours of operation. They should be replaced when their viability is questionable or if the unit will be required to operate for over 400 hours. Brushes must be seated properly when changed. Initially, the hi-vol motor should be operated at one-half voltage for about 20 minutes. A motor that is knovn or suspected to be broken should be discarded; it is essentially an expendable item. The thread fittings between the filter hood and motor/blower unit should be inspected for tightness, cross-threading and leaks. Improper connections will cause inaccurate or variable flow readings. All black rubber gaskets on the filter holder faceplates should be inspected for wear and compressibility. A thin, hard, compressed gasket should be replaced because an adequate seal on the filter cannot be obtained with a gasket in this condition. The pen and arm assembly must be functional, or otherwise replaced. All nuts, screws, latches, and the unit housing should be tightened. Finally, the hi-vol should be plugged in and run for a period of time to detect the development of any problems.

[Bold items enclosed in brackets denote changes from original text]

The sample period, project duration, and sampling days should be determined in advance. Most hi-vol sampling is done for a 12-hour continuous period beginning 0800-1200 to avoid diurnal fluctuations in wind direction. The longest possible project duration will be beneficial to obtain a representative sample group. Variable weather conditions are an important factor to consider. It is important that all hi-vols stop and start at the same times, insofar as possible, for data comparability vis-a-vis wind fluctuations.

The hi-vol samplers require an intensive calibration process of the motor each time they are sited. A pre-calibration and post-calibration process is followed for every sampling exercise. These procedures and documentation forms can be found in the E & E SOP for Collection of Ambient Air Samples at Hazardous Waste Sites (March 1988) [which is presented in Appendix M of this document.] The filter folder, daily unit log, and site logbook information must be recorded completely.

Hi-vol samples can be analyzed for total suspended particulates (TSP) and/or chemical analysis of the particulate. The filter media of choice for chemical analysis is cellulose which does not contain trace metals and is easily digested. TSP determination requires sensitive gravimetric filter weighing. Fiberglass media is ideal because it can be easily desiccated to constant weight.

To sample particulates of respirable size only, the same hi-vol sampler (and sampling procedure) is used except that the standard lid is removed and replaced by the size selective inlet (SSI). The SSI is hinged to open for access to a metal plate that must be sprayed with silicon prior to sampling. The silicon ensures complete collection of particles >10um MMAD (Mass Median Aerodynamic Diameter) so that only particles <10um MMAD are collected on the filter for analysis. The plate should be removed and treated prior to initiating each sampling project. [Additional information regarding the use of the SSI is contained in Appendix N.]

The sampler must operate at 40 cubic feet per minute (cfm) to ensure proper size selection of the collected particulate. If, for example, the sampler ran at 30 cfm instead of 40 cfm, the particulate collected on the filter would be larger than 10 um MMAD.

(Bold items enclosed in brackets denote changes from original text]

Gillian hi-vol pumps with the capacity to pull up to 20 liters per minute can also be employed to sample for TSP [or other particulate contaminants]. The collection media used for this sampling method is a 35mm cellulose filter with 0.7 micron pore diameter housed in a non-conductive cassette. This sampling method does not achieve as low a detection level as the previously described sampling methodology, but it does have the advantage of portability and ease of calibration. Operation and calibration is similar to that of the low volume pump units.

[6.1.4 Semi-Volatile Sampling]

Equipment and siting requirements [similar to those] used for ambient inorganics are used for semi-volatile organic compounds such as PCBs and pesticides. The semi-volatile compounds adhere to particulates which are collected on the cellulose filter. In addition, the high-volume sampler [for particulates can be] modified by attaching a polyurethane foam (PUP) collector downstream of the cellulose filter [or by use of a specific PUF sampler, the PS-1]. The PUP filter collects any organic compounds which volatilize in the airstream passing though the particulate filter. [Semi-volatile materials are trapped in the cells of the PUF filter, which acts like a sponge, and are extracted for analysis using a solvent such as hexane. See Appendix O for a detailed description of the PUF sampler and sampling procedures.

Previous sampling methods used the basic particulate, high-volume air sampler which had a 9-inch stainless steel extension mounted between the particulate filter holder and the blower motor. The 9-inch extension was designed to hold three %inch-thick foam plugs to collect semi-volatile vapors from the ambient air as well as any vapors adhered to particulate ratter trapped on the particulate filter. Each of the three PUP foam plugs vas then analyzed separately to determine to what degree the'semi-volatile vapors had infiltrated and, if the deepest plug vas found to contain semi-volatiles, to determine if the foam plugs had been saturated and if breakthrough had occurred. The particulate filter was also solvent extracted to determine how much semi-volatile material vas still on the filter.

[Bold items enclosed in brackets denote *changes* from original text]

This semi-volatile sampling method is quite demanding of the sampler motors since it requires that air be pulled through 9 inches of foam material. In order to overcome the resistance caused by the foam plugs, the sampler motors have to run almost wide open. The air pulled through the rotor is also used to cool the motor; therefore, motors and brushes burn up quickly and have to be replaced frequently because the added resistance allows only about half the air that is necessary to cool the motor through the foam plugs.

To alleviate this problem the General Metal Works model PS-1 was developed. The PS-1 uses a motor about the same size as the motor used in the previous particulate samplers, but it uses a smaller volume of foam. Eence, the amount of air used for sampling is sufficient to cool the motors. The PS-1 has no flow control so the motor runs wide open constantly. However, the amount of air to be pulled through the foam can be regulated by a bleed valve.

Both particulate samplers, the PS-1 or the modified hi-volume particulate sampler with filter holder throat extender, will provide adequate results.]

6.2 SURFACE GEOPHYSICAL SURVEYS

A variety of geophysical survey techniques may be utilized during the NAS Pensacola site investigations in order to identify the presence of buried objects, evaluate subsurface soil lithologies, and/or delineate the presence/extent of soil and/or groundwater contamination. These data can be extremely useful in identifying potential areas of subsurface contamination and thereby allowing the most efficient and cost-effective selection of sampling locations. Potential geophysical survey techniques that may be required at one or more sites include:

- Electromagnetic conductivity surveys;
- Very low frequency electromagnetic surveys;
- Metal detection;
- Magnetometer surveys;
- Ground penetrating radar surveys;
- Seismic surveys; and
- Radioactivity surveys.

[Bold items enclosed in brackets denote changes from original text]

Geophysical survey data will be collected according to sampling grids that will be established across the site prior to the survey initiation. Initial grid point spacings will vary between 25 and 250 feet, depending on the size of the site, type of geophysical survey technique, and amount of cultural interference (e.g., buildings, underground utilities, overhead powerlines, fences, metal scrap, etc.). More compact grid point spacings and measurements will be employed in areas of anomalous readings to assist in delineating the nature and extent of such anomalous areas. Several of the potential geophysical techniques also allow readings to be continuously monitored during traversal between formal grid points. Prior to initiation of the on-site surveys, a grid line will be established and measurements recorded at a presumed background location in the immediate site vicinity. All grid points and areas of anomalous readings will be marked and labeled in the field, surveyed, recorded, and precisely mapped.

Geophysical survey data will be recorded in the field in one of two ways: manually entered into the site logbook during the survey, or automatically recorded on printouts by the geophysical units during the survey. These data will be presented in the form of manually or computer-generated isoline maps (two- and three-dimensional) as well as in the form of strip charts. All maps and strip charts will be labeled according to the site and grid pattern, and signed by the field team leader. An interpretation of the data will accompany the maps and strip charts.

6.2.1 Electromagnetic Conductivity (EM) Surveys

The electromagnetic conductivity (En) geophysical technique measures the apparent terrain conductivity of a portion of the subsurface. The EM instrument transmitter coil (dipole') is energized by an alternating current that generates a primary magnetic field. This primary magnetic field induces a secondary magnetic field in the subsurface that is sensed by the receiver coil (dipole). The receiver coil measures the ratio of the primary and secondary magnetic fields and

[Bold items enclosed in brackets denote *changes* from original text]

yields a reading of this ratio in millimhos per meter. .The ratio of the field strengths is proportional to the intercoil spacing and frequency of the instrument as well as to the permeability and conductivity of the surrounding area. When intercoil spacing and frequency are fixed as a function of instrument design or manually (intercoil spacing only), the field ratio represents a direct indication of apparent terrain conductivity.

Apparent terrain conductivity is influenced by a number of factors, including: moisture content of the subsurface, presence and concentration of dissolved chemical species, and characteristics of the solid matrix (e.g., porosity, clay content, mineral composition, compaction, etc.). Individual EM readings reflect the combined influence of all of these factors averaged over the effective exploration depth of the instrument (the effective exploration depth being determined by the distance between the transmitting and receiving coils of the instrument at a given frequency). Assuming that the natural characteristics of the solid matrix remain constant, EM readings can be considered indicative of varying concentrations of adsorbed soil matrix contaminant species or dissolved contaminant species in groundwater.

The EM surveys will be performed using the Geonics EM-31 and EM-34 instruments. The EM-31 has effective exploration depths of approximately 3 and 6 meters (10 and 20 feet, respectively), depending on whether the coils are oriented perpendicular (horizontal coplanar mode) or parallel (vertical coplanar mode) to the surface (the intercoil spacing is fixed in this instrument). At each EM-31 survey grid point, four readings will be recorded: one parallel and one perpendicular to the grid line for both the horizontal coplanar and vertical coplanar modes. Transition from the horizontal to vertical coplanar mode is implemented by simply turning the instrument on its side.

The EM-34 has effective exploration depths of approximately 15 to 60 meters (50 to 200 feet) depending on the intercoil spacing and orientation. At each EM-34 survey grid point, at least three readings will be recorded: at intercoil spacings of 10(32.8), 20(65.6), and

[Bold items enclosed in brackets denote changes from original text]

40(131.2) meters (feet) in the normal operating condition. The EM-34 survey will usually be performed only if the En-31 survey has indicated the presence of anomalous areas that might represent a contaminant plume or source area.

6.2.2 Electromagnetic Metal Detection (EM-MD)

Electromagnetic metal detection (EM-HD) will be primarily utilized to confirm the absence of buried metal objects at proposed subsurface sampling locations. The EM-MD measurements will usually be obtained using one of the standard portable metal detection/pipe locator instruments currently maintained by E & E. On occasion, the sensitivity of the EH-31 instrument may be adjusted so as to permit its use for the accurate detection of buried metallic objects. Hovever, the EM-31 will only be employed for this purpose when practical and cost-effective (i.e., if it has already been mobilized in conjunction with the performance of an En survey elsewhere on the base and is available).

6.2.3 Magnetometer (Hag) *Surveys*

Hagnetometer (Hag) surveys will be performed using a proton magnetometer or gradiometer. Proton magnetometers measure the intensity of the total magnetic field at the surface of the Earth. Protons in a chamber within the magnetometer align with the Earth's magnetic field, and the number of protons that align is directly proportional to the intensity of the total magnetic field. The number of aligned protons is converted to a number (read in gammas), which represents the intensity of the total magnetic field at that point. The presence of buried materials with magnetic properties (e.g., metal drums and pipes) will produce anomalously high total magnetic field intensities. Consequently, Hag surveys can be employed to locate buried ferromagnetic materials. Gradiometers are basically motor magnetometers which consist of two stocked Hags; one measures the induced magnetic field while the other measures the total magnetic field. Thus a gradient between the two is generated at each particular station.

[Bold items enclosed in brackets denote changes from original text]

The measured intensity of the Earth's total magnetic field at a given point is influenced by a number of factors, including: natural occurrence of metals in subsurface lithologic materials; presence of man-made metal-containing objects such as buildings and pipelines; the permanent magnetic strength of buried metal objects; the intensity of the induced magnetic strength; shape, orientation, and degree of deterioration of any buried metal objects; and natural diurnal variations. The potential influence of all of these factors will be considered when establishing the Mag survey grid and when interpreting the resultant data. A gradiometer measures this influence automatically; however, when separate proton mags are the only instruments available, a diurnal variation measurement station will be established away from all cultural features to allow quantification of this natural fluctuation in the Earth's magnetic field.

6.2.4 Ground Penetrating Radar (GPR) Surveys

Ground penetrating radar (GPR) surveys will be conducted using OYO or GSSI GPR systems. These GPR instruments transmit high frequency radio waves into the subsurface via a small antenna that is moved slowly across the surface of the ground. This electromagnetic signal is reflected back to a receiving antenna from the interfacial surfaces between materials that exhibit different electrical properties. The variations in the return signal are continuously amplified, filtered, processed, and recorded to produce a continuous diagrammatic cross-sectional "profile" of shallow subsurface 'conditions. The interfacial boundaries that generate reflections of the electromagnetic signal commonly are associated with natural geologic and hydrogeologic features: bedding, cavities, fractures, intrusions, variation in type and degree of cementation, and variation in moisture and clay content. The interface between subsurface soils and such buried man-made objects as tanks and drums can also produce a signal reflection. Furthermore, given that the presence of adsorbed or dissolved contaminant species can also affect the electrical properties of subsurface lithologic units, GPR surveys can also provide an indication of 'the presence and extent of subsurface contamination (especially if computer enhancement of signal reflection profiles is employed).

[Bold items enclosed in brackets denote changes from original text]

The exploration depth of GPR surveys is highly site-specific and highly dependent on the specific properties if the subsurface materials. In particular, the presence of such electrically conductive materials as clays in the shallow subsurface will greatly restrict the exploration depth. However, the continuous profiles provided by GPR surveys offers the potential of obtaining substantially more detail than is possible from many of the alternative geophysical survey techniques.

6.2.5 Very Low Frequency (VLF) Surveys

In the event that site conditions require definitions of vertical. geologic contacts or further delineation of groundwater contanination beyond the limits of EM, a very low frequency (VLF) survey can be performed. The theory underlying VLF surveys is similar to that of EM surveys. The principal difference is the source of the electromagnetic waves. VLF antennas used for military purposes are permanently located at five points in the United States (including Hawaii and Puerto Rico) and function as the transmitters for the survey. The electromagnetic waves generated by VLF antennas travel parallel to the earth's surface at great distances from the source and penetrate the Earth's surface similar to the waves generated by an EM-31/EM-34 transmitter. The VLF instrument hence simply acts as an EM-31/EM-34 receiver unit and measures the ratio between the primary VLF field and the secondary subsurface field induced by the penetrating VLF waves.

6.2.6 Seismic Surveys

Seismic refraction and seismic reflection techniques may be used to characterize and/or map (both horizontally and vertically) subsurface lithologic units (e.g., water-bearing zones and confining beds), degree of veathering, fractures, faults, channels, depth to bedrock, and depth of the water table. These techniques are particularly useful in areas where subsurface lithologic data obtained from well or exploratory borehole drilling logs are not available. Seismic refraction techniques will be employed when the objective is to delineate the nature, depth, thickness, and continuity of major shallow (< 100 feet) subsurface lithologic units (in general, three to four units can be delineated as long as they exhibit progressively increasing seismic wave propagation

[Bold items enclosed in brackets denote changes from original text]

velocities with depth). In contrast, seismic reflection techniques will be employed when refraction cannot be employed (i.e. high velocity layers overlying low velocity layers) the objective is to obtain more detailed definition of subsurface stratigraphy.

Both the refraction and the reflection technique require that seismic waves be transmitted into the subsurface by a physical source (e.g., a man-powered sledge hammer, a mechanical device, or explosive charges). The seismic waves are refracted and reflected when they pass across the boundary between subsurface lithologic units that exhibit different seismic wave propagation velocities (as a function of such material properties as density and hardness). The travel time (measured in milliseconds as a seisnograph) between the transmitting source and a receiver (geophone) is determined by the wave path and the material in which the wave is propagating. By using a linear array of equally spaced geophones placed on the surface, the travel times associated with different wave paths through subsurface lithologies exhibiting different propagation velocities can be measured. Plotting of these travel times versus the corresponding source-to-geophone distances can then be used to determine the nature, depth, and thickness of the various subsurface lithologic units. Geophone spacing can be varied from just a few feet to more than several hundred feet depending on the exploration depth of interest and the degree of resolution required.

The exploration depth of seismic surveys is primarily a function of the strength and frequency of the input signal. Consequently, mechanical devices and explosive charges must be used when information on deep (e.g., greater than 100 feet) subsurface features is required. For most applications at NAS Pensacola, use of an aluminum strike plate placed on the ground and a sledge hammer should be adequate. However, alternative energy sources may be employed if required.

6.2.6.1 Seismic Refraction

Seismic refraction surveys will be performed using a multi-channel instrument system. These seismographs display the time required for the primary seismic wave to travel from the source to each of several geophones, as well as the individual wave configurations. Survey lines will typically be established with geophones initially spaced at 10 foot

[Bold items enclosed in brackets denote changes from original text]

intervals. If greater exploration depths are determined to be necessary based on the observed field response, then the entire line of geophones will be moved further away from the signal source and the above procedure repeated. Depending on specific subsurface lithologies, survey line lengths on the order of five times the desired exploration depth may be required. Eovever, if it appears that such extended survey lines may commonly be required, then seismographs can be used with more channels (up to 48) to increase survey efficiency.

Reverse survey lines (i.e., moving the seismic vare source to the end of the forward survey line and duplicating the measurement set in the reverse direction) will be run on 20% of the forward lines or as required to obtain more detailed information on the nature and location of any laterally restricted subsurface heterogeneities revealed by the forward lines.

6.2.6.2 Seismic Reflection

By comparison, the reflection survey is capable of much deeper investigations with the same amount of energy used for the refraction method. While reflections have been obtained from depths as shallov as 10 feet, the method is more commonly applied to depths greater than 50 to 100 feet. The reflection technique can be used effectively to depths to a few thousand feet and can provide relatively detailed geologic sections. As with radar reflections, the vertical scale is two-way travel time, that is, the time it takes for a vave to travel down to an interface and back up to the surface again. The time scale must then be converted to depth, making some assumptions on the distribution of seisnic velocity.

The two approaches currently used to obtain shallov seismic reflection data, both of which have evolved only over the past few years. These tvo methods are, the common offset (C.O.) method which was developed by Dr. J. Eunter of the Canadian Geological Survey; and the common depth point (C.D.P.) method adapted from the oil industry by Dr. R. Langston of Geo-Conpu-Graph, Inc., and Dr. O. Steeples of the Kansas Geologic Survey. The common offset method uses low cost equipment and software, but is limited in certain geologic settings. The common depth point has less site specific geologic limitations, but is more dependent

[Bold items enclosed in brackets denote changes from original text]

0001344

upon expensive hardware and software capabilities. Both reflection methods require considerably more skill, equipment, and data processing to carry out a survey than the refraction method.

The seismic survey at NASP will be used to obtain data to a depth of at least 100 feet. Survey lines will be located base-wide. The precise locations will be determined during a pre-survey of the base prior to the seismic survey. Although the purpose of the seismic survey is to evaluate the depth and thickness of the marine clay layers where borehole data does not exist, survey lines will be run in areas where borehole data does exist, in order to use the data as a control.

Seismic data will be recorded manually in the site logbooks and on printouts by the seismic unit during the survey. Data will be presented in the form of strip charts and graphs. The strip charts and graphs will be labeled according to survey line number and will be accompanied by a base map showing the locations of the survey lines, and discussions of data interpretation.

6.2.7 Data Reduction and Interpretation

For all above mentioned surface geophysical methods, data reduction and interpretation will be performed manually or with relevant computer software packages in the field or in-house. E & E owns a number of these packages which evaluate raw field data and provide hard copy graphic representations. In some cases, as with small surveys, manual evaluation methods provide adequate representation of the raw data, in a most efficient manner and will not require computer assisted techniques.

For the most part, geophysical data will be massaged immediately after retrieval from the field. This allows for a timely and enhanced understanding of the subsurface site conditions, allowing adjustments to the continued geophysical survey, or to fine-tune the locations for soil borings or ground water'monitoring well installation.

6.3 RADIATION SURVEYS AND MONITORING

Radiation surveys and monitoring are used to characterize radiation types and levels, and to define areas of radioactive contamination and external radiation. Appropriate radiation surveys must be completed before team members can proceed with other site investigation tasks.

Four background radiation measurements will be taken at least one mile from the site. The measurements will generally be taken at 90° intervals from the site perimeter with all instruments to be used during site work. Operational checks must be performed prior to instrument use.

[6.3.1 Personnel Training

In order to perform work on potentially radioactive sites, the site safety officer and radiation safety officer, who vill be operating the radiation equipment, must have successfully completed E & E's 40-hour Radiation Protection Procedures and Investigation course. All other personnel who will be working on the site must have successfully completed B & E's 8-hour General Radiation Safety course.

6.3.2 Personnel Monitoring

Maximum radiation doses to E & E personnel will be limited to the values listed in Table 6-1. These limits represent 80% of the Federal dose standards as listed in 10 CPR.20.101. This 20% reduction safety margin is standard practice in the nuclear industry.

All team members will wear thermoluminescent dosimeters (TLD's) on site. Pocket dosimeters will also be issued prior to site entry onto known or suspected radioactive sites. Team members will be monitored for radioactive contamination upon exiting the exclusion area at the hot line using the pancake Geiger Mueller (GM) detector. The alpha scintillation detector may also be used for alpha-emitting radionuclides. [Rill-body-count baseline measurement will not be performed. Instead, urinalysis baseline measurements will be conducted, with follow-up measurements, if necessary.]

At known or suspected radioactive sites, emergency information will include contingency plans for transport and care of personnel who are radioactively contaminated, and identification of a hospital or facility that will accept them.

[6.3.3 Personal Protection

At known or suspected radioactive sites, the protective clothing will consist of: 1) one-piece coveralls such as Tyvek (may be layered

[Bold items enclosed in brackets denote changes from original text]

for extra protection); 2) neoprene gloves (two pair, layered); 3) neoprene safety boots; 4) disposable booties; 5) hood (if necessary); and 6) full-face APR (if necessary). The full-face APR will be worn if alpha radiation is detected or if the concentration of airborne particulates on site reaches or exceeds the action level established by the health physicist. The selection of APR cartridges and required protection factors will be as described in 10 CFR 20, Appendix B, Table 1.

6.3.4 Waste Disposal Methods

At known or suspected radioactive sites, potentially radioactive waste will be minimized and segregated from other waste. Cost-management decisions will determine whether it is more practical to dispose of an item or to dispose of decontaminated wastes. For example, if any short half-life wastes exist at a site, these wastes can be held until they have reached unregulated levels. Actual disposal of radioactive materials or waste will be the responsibility of the Navy and disposal methods must comply with 10 CFR 61.56.]

6.3.5 Site Entry

At known or suspected radioactive sites, a preliminary walkover survey will be performed using a micro-R-meter at one meter above the ground to approximate site team exposure. A gamma scintillation detector will also be used directly at ground level to locate source "hot spots". Discrete measurements will be taken and recorded at reasonable intervals (dependent on site size) and at any point where elevated readings are noted.

The proposed support zone will be established upwind and uphill of the contaminated area and in an area that has background radiation levels (based on the preliminary survey). Areas with non-ionizing sources of radiation (microwave and television transmitter towers) will be avoided, since they can affect instrument performance.

If radiation levels exceed 2 milliroentgen/hour (mR/hr), the presence of a health physicist is required and a formal gridded radiation survey may be necessary. If levels exceed 5 mR/hr, additional

Table 6-1

MAXIMUM ALLOWABLE RADIATION DOSE
TO INVESTIGATION PERSONNEL

Part of Body	Per Calendar Quarter	Per Year
Whole body, head and t w k , gonads, blood forming organs, lenses of eyes	1 rem	4 rem
Skin of whole body	6 rem	24 rem
Rands. Forearms, Foot and ankles	15 rem	60 rem

Source: E L E 1990

NOTE: Values represent 80% of federal dose standards per 10 CFR 20.101.

0001346

work protocols will be established. All personnel operating radiation survey equipment will have been trained by E & E corporate health physics personnel.

6.3.6 [Site] Characterization Survey

The characterization survey is conducted to enable evaluation of radiological hazards and/or facilitate the development of remedial action plans. The characterization survey includes surface scans to identify locations of possible residual contamination. Systematic measurements will then be performed on .these areas usually referenced to a formal grid pattern. At least 5 data points for each 100 m^2 of open land or 1 m^2 of building surface is recommended.

6.3.7 Sample Area Radiation Monitoring

The sample area will be monitored to confirm that radiation levels remain acceptable when a site area is disturbed by sampling (generally applicable to soil samples). Samples may be collected when neither of the following criteria are exceeded:

1. Company action levels - team members may perform sampling duties when the sample material radiation level does not exceed 5 mr/hr or a site-specific action level specified in the site safety plan; or

2. Laboratory acceptance. levels - each analytical laboratory specifies acceptable radiation limits for samples.

The sample area can be monitored with various instruments; survey results will indicate the type of radiation present and thus the appropriate monitoring instrumentation. Radiation levels of sample material will typically be measured with a pancake GM detector. A zinc sulfide alpha scintillation detector may also be used for alpha-emitting radionuclides such as radium-226. Measurements will be taken (when possible) of: 1) undisturbed sample area, if not previously included in the radiation survey, 2) sample material, prior to collection, and 3) containerized samples. The containerized sample is monitored through the open cap.

Measurements will be recorded on a Sample Radiation Monitoring form or directly into the field logbook, at the discretion of the field

[Bold items enclosed in brackets denote changes from original text]

team leader. If a data form is used, a summary of this and other applicable sampling information will be recorded in the field logbook.

6.4 SOIL HEADSPACE SURVEY

Selected samples will be screened in the field for volatile organics using an organic vapor analyzer (OVA) in the survey mode. The screening process is as follows:

- A water bath or ice chest is prepared to provide a medium in which to equilibrate the temperature of screening samples collected.
- Samples are collected by filling 16-ounce jars with soil to half the container volume, and promptly capped.
- Following collection, each sample is promptly placed into the temperature equilibrating medium. As a general rule, headspace readings will be taken after the sample has equilibrated at 20°C for a time period of 5 minutes.
- At the end of the equilibration period for each sample, the container lid is removed to allow the insertion of the OVA probe. The readings obtained on the OVA in ppm will be recorded in the field notebook. OVA readings will be distinguished as peaks, sustained or unstable depending on the response observed.
- The OVA screening is conducted in a sheltered area, affording protection from the potentially adverse affects of wind, precipitation and direct sunlight.
- Because atmospheric conditions are dynamic, fluctuating to some degree during the course of a day, pertinent information such as ambient temperature, percent humidity and periods of sunlight or cloudiness will be recorded during the screening investigation. These conditions will be monitored, equilibration times adjusted, and OVA measurements evaluated, taking into consideration atmospheric fluctuations.

6.5 SOIL GAS SURVEY

The general locations and depths of soil gas sampling locations will be described in the site-specific vorkplan. Exact saaple locations will be determined in the field, based on actual conditions at the site. At least one sample will be collected outside the area of contamination, in order to collect background data for evaluation.

[Bold items enclosed in brackets denote *changes* from original text]

Experience with soil gas monitoring has shown that the weather conditions most conducive to a successful survey are warm, dry, low-wind conditions following several days of warm, to hot weather. If possible, the survey will be planned for such conditions.

The soil gas survey will be conducted using a perforated drive point method. The soil gas sampling point is constructed from an appropriate length of galvanized steel pipe. A sharp, penetrating point is welded to the end of a pipe and perforated along the six inch section above the point. A threaded galvanized steel cap, with a short length of copper tubing penetrating the center of the cap is used to seal the upper end of the soil gas point and to provide a connection for sample tubing.

The following procedures will be implemented at each of the soil gas sampling locations:

- A decontaminated soil gas sampling point will be driven into the ground to a depth several inches above the water table or 10 feet below land surface, whichever is shallower.

- [Teflon] tubing will attach the soil gas point to a sample collection device (Tedlar bag). Additional [teflon) tubing will then be used to attach the sample collection device to a vacuum pump.

- At least three volumes will be evacuated from the collection device, tubing, and soil gas point.

- Immediately following system purging, the sample collection device will be closed off at the end nearest the vacuum pump. [Five minutes] will be allowed for equilibration to occur in the sample collection device, and it will then be sealed.

- The sample will be analyzed [in the field using an OVA in either the GC or the survey mode or in the laboratory for VOCs] using the 'field screening methods described in Section 9-1. [If the sample is analyzed in the field using an OVA, the sample may be pumped directly from the sampling point into the OVA after equilibration has been completed.]

- Upon completing sampling at each location, the soil gas sampling point will be removed. Any paved areas penetrated by the sampling point will be patched with the appropriate material.

[Bold items enclosed in brackets denote changes from original text]

- The sampling point will be decontaminated prior to [initial] use [awl between each sampling location. The exterior of the point and shaft will be vasbed vith detergent and vater and then rinsed vith tap vater. A triple solvent rinse vitb methanol will be used on the exterior and interior of the device. This will remove any volatile material that may have condensed on the interior surface. The sample point can then either be purged vith air to remove the methanol vapors or heated to drive the vapors off. A check with either the OVA or HNu will insure that all of the methanol and other volatile contaminants have been removed. Teflon] tubing will be discarded after collection of each sample.

- Field data obtained will be recorded in a log book. Upon completion of soil gas sampling at the site the data will be plotted on a site base map and used for assessment and planning of future investigative vork.

- A duplicate sample will be collected at a frequency of one for every 20 samples. [In addition, a blank sample will be collected at a frequency of one for every 20 samples as a check on decontamination procedures.]

6.6 SOIL SAMPLING

6.6.1 Surface Soils

Surface soil sampling will involve the collection of soil material down to a maximum depth of 12 inches. Stainless steel trowels, coring devices, and mixing bowls will be utilized as sampling implements. All sampling implements, including samplers gloves, will be decontaminated prior to the collection of each sample. During the collection of each surface sample the observable physical characteristics (e.g., color, odor, physical state) of the soil material will be recorded. Using the above mentioned sampling implements the soil material will be transferred to an 8-ounce wide-mouth glass container. A sufficient [number of containers] will be collected for subsequent analytical testing requirements.

Uhen composite sampling is required for surface soil samples, areas to be characterized by compositing will be delineated. Each composite sample will consist of a predetermined number of aliquots. The soil aliquots will be collected to equivalent depths and [consist] of proportionately equal volumes. The aliquots will then be homogenized in a stainless steel mixing bowl as a composite sample, and transferred to the sample container. Sampling implements will be decontaminated prior

[bold items enclosed in brackets denote changes from original text]

to the collection of each composite sample; however, decontamination will not be required between the collection of the sample aliquots.

As part of the sampling activity, field personnel will record the following information in the logbook as a minimum: description of sample locations, time period for each sample collection, soil description, and surface conditions of the surrounding area.

In addition, all pertinent meteorological information such as ambient air temperature, wind velocity, barometric pressure, humidity, and periods of precipitation will be recorded.

6.6.2 Subsurface Soils

Subsurface sampling will be conducted according to standard procedures using stainless steel bucket augers and/or a drill rig equipped with solid-stem and hollow-stem augers, and a 2-inch diameter, 18- or 24-inch split-spoon sampler, as appropriate. The split-spoon sampler will be advanced by conventional methods. This will include attachment of the sampler to an AW rod and standard 140-pound hammer. Blow counts will be recorded at 6-inch intervals to the total sample depth of 18 or 24 inches. Borings will be drilled to depths specified unless sample screening results dictate halting the activity at a shallower depth.

When using a bucket auger, samples will be collected at 6-inch intervals (the length of the bucket) unless otherwise detailed in the site-specific workplan. If a drill rig with solid stem augers is employed, soil samples will be collected from drill cuttings as they rise to the top of the borehole. If the nature of the material or the borehole prevent this type of sample collection, the augers will be lifted above the borehole and the soil sample will be collected directly from the auger flights.

A rationale for using any particular type of sub-surface soil sampling method will be provided in detail in the site-specific workplan.

As samples are retrieved, they will be screened with an OVA and the HNu, if deemed necessary. Upon completion of lithologic logging, the sample will be placed in a clean 8-ounce jar and processed for shipment.

[All drilling equipment (i.e., drill rods, drill bits, auger flights, etc.) will be sandblasted initially prior to arrival on site (i.e., NAS Pensacola).] Prior to the start of the sampling work, all drilling tools and equipment will be washed with high-pressure steam equipment and rinsed with an appropriate solvent as specified in Section 6.10 or in specialized requirements detailed in the SQAPP for a particular site. All drilling and sampling equipment to be reused will be decontaminated as specified. When samples are to be composited, mixing will be done using stainless steel containers and tools. These also will be decontaminated between each use. Where possible and appropriate, disposable equipment will be used in order to minimize cross-contamination.

Upon completion of the borehole, the open hole will be backfilled with a grout mixture. If the borehole is shallow (less than 20 feet) drill cuttings will be used to backfill the hole. However, shallow boreholes will be backfilled with grout if a confining or semi-confining unit is breached. Drill cuttings, which are not used for backfill, will be drummed or otherwise disposed of in accordance with applicable regulations and the site-specific QAPP.

In some cases, subsurface soils will be composited in order to characterize certain depth intervals. Several aliquots consisting of proportionate volumes of soil material will be collected from a number of equally spaced segments within the sample interval and homogenized as a composite sample. Sample collection and homogenization will be conducted with stainless steel spoons, trowels, and mixing bowls. Decontamination of sampling implements will be conducted before the collection of each composite sample, but will not be required between the collection of individual aliquots.

Samples to be analyzed for volatile organics will not be homogenized or composited; rather, select segments of soil, equal in volume, will be taken from each aliquot location and placed in a 40 ml glass vial.

[Bold items enclosed in brackets denote changes from original text]

6.7 DRILLING AND MONITORING WELL INSTALLATION

6.7.1 Pre-Fieldwork Activities

Prior to entering the field to drill and install groundwater monitoring wells, drilling specifications will be prepared and submitted to qualified drilling subcontractors for bid solicitation. A qualified driller must: 1) be licensed by the State of Florida and the Northwest Florida Water Management District (NUFWMD); 2) have experience working on similar projects (this will apply both to the individual drillers in the field and to the drilling company as a whole); 3) employ personnel who are OSHA-certified to work on hazardous waste sites; 4) have the necessary equipment capabilities; and 5) be approved by the Navy.

The necebsary permits will be obtained by the driller prior to the initiation of the drilling activities. Drilling activities and monitoring well construction will comply with regulatory and NAS Pensacola requirements regarding access, drilling, groundwater extraction, and disposal of derived wastes. In general, all drilling and monitoring well installation procedures will conform with the Southern Division Naval Facilities Engineering Command Guidelines for Groundwater Monitoring Well Installation, March 1989.

6.7.2 Drilling Methods

6.7.2.1 Hollow-Stem Auger Drilling

If possible, all boreholes for monitoring wells and split-spoon samples will be drilled using hollow-stem augers. This drilling method involves advancing a bit attached to the appropriate diameter, hollow-stem auger without the use of any drilling fluid. When the desired depth is achieved, the well casing is installed through the hollow center of the augers. The advantages of this method include: 1) prevention of borehole caving; 2) the prevention of potential fluid circulation problems associated with other methods of drilling; 3) the ability to drill without introducing any fluids into the formation.

6.7.2.2 Mud-Rotary Drilling

Deeper boreholes may require mud-rotary drilling techniques. An appropriately sized bit will be advanced at the end of hollow drilling rods. Drilling mud is pumped through the rods and out through the bit.

[Bold items enclosed in brackets denote changes from original text]

The drilling mud acts as a lubricant for the bit, prevents borehole collapse by the formation of a mud cake, and carries drill cuttings away from the bit, subsequently forcing them to the surface. Cuttings are strained from the drilling mud and it is recirculated. If shallow contaminated zones are present, drilling mud will not be recirculated during drilling of deeper zones. In addition, surface casing will be installed to seal off the shallow zone from the borehole (see Section 6.7.4)

This technique will only be used if the required depth of a borehole, or the hardness of a formation prevent the use of hollow-stem augers. All wastes associated with this process, such as drilling mud and cuttings, will be drummed, labeled and left on site, unless otherwise directed by the EIC.

6.7.2.3 Split-Spoon Sampling

Split-spoon samples will be collected using 2- or 3-inch diameter, stainless steel split-spoon samplers that are 1.5 to 2 feet in length. The sampler will be attached to a rod which will then be pounded into the formation with a standard 140 lb. hammer to advance the spoon. The borehole will be advanced to the depth of the spoon using hollow-stem augers. After the spoon has been driven to the required sample depth, it is retrieved and "split" open enabling the collection of a representative core sample. The spoon is advanced again, sampling the undisturbed area.

Each split-spoon core will be visually inspected by an on-site geologist and sediment characteristics (e.g., lithology, color, particle size, moisture content) will be described in the field logbook. The collection of samples for analysis will be as described for subsurface soil sampling or in accordance with specific requirements described in the workplan and SQAPP.

Each split-spoon sampler will be completely decontaminated between sample intervals, using the procedures outlined in Section 6.10.

6.7.3 Standard Monitoring Well Construction

Unless otherwise specified in the site-specific QAPP, all monitoring wells will be completed with 2-inch I.D., Schedule 40 PVC

[Bold items enclosed in brackets denote *changes* from original text)

casing and well screen. All well casing segments will have flush-threaded joints. No solvents will be used as joining compounds. [O-rings will not be used with the flush-threaded joints; however, the threads will be sealed with Teflon tape.]

The casing for each monitoring well will terminate in 10 feet of manufactured, 0.015-inch, slotted screen. The bottom of the screen section will have a solid PVC end cap to seal the open end and to act as a trap for sediment entering the well.

The annular space of the borehole will have a minimum radius of 2 inches from the wall of the well casing. The annulus will be backfilled with clean, medium to coarse grained sand to a level which is at least 1 foot above the screen/casing joint. Sand pack backfilling will be performed at intervals of up to 2 feet at a time in order to lessen the potential for bridging. If hollow-stem augers are being used, the sand pack will be constructed in conjunction with a slow smooth extraction of the augers. In the event that wells are constructed using the mud-rotary technique, all drilling equipment will be out of the borehole before the well is constructed; however, similar sand packing procedures will be followed to assure that the well is constructed properly. The top of the sand pack will be sounded periodically during backfilling to determine its elevation above the screen, as well as to determine whether any bridging has occurred. Bridges will be broken by tamping or by washing with potable water to move the pack material downward in the hole.

A 1-foot bentonite seal will be installed directly above the sand pack. If the seal is above the water table, bentonite pellets will be placed by free-fall, and will require frequent monitoring for bridging. Potable water will then be poured into the borehole to wet the bentonite pellets, using a ratio of 1 gallon of water for 2 pounds of bentonite. If the seal is below the water table, a bentonite slurry will be placed using a' tremie pipe. The consistency of the bentonite slurry will be approved by the on-site geologist prior to placing the bentonite seal.

The remaining annular space will be filled with grout, to a level 2 feet below land surface. The ratio of cement-bentonite grout components will be 94 lbs. Portland cement to 5 lbs finely ground bentonite to 6.5

[Bold items enclosed in brackets denote changes from original text]

gallons potable water. The grout slurries will be mixed to a uniform and smooth consistency. The consistency will be approved by the on-site geologist prior to placement. The grout will be pumped into the borehole with a tremie pipe. The auger casing will be removed a section at a time during grouting. The grouting will be conducted continuously and in such a manner as to achieve the filling of the entire annular space.

The 2 feet of annular space above the grout will be filled with 100% cement, and a protective security cover will be set into the cement.

6.7.4 Installation of Surface Casing

When drilling and installing monitoring wells through contaminated zones, the potential for establishing a downward conduit for contaminants exists. Where this potential is found to exist, outer casings (or surface casings) will be installed as a preventive measure to seal off the influence of the contaminated zone.

Surface casing will be constructed of Schedule 40 PVC casing and will be of sufficient diameter to provide a 2-inch annular space around the well casing. The casing will be installed in a borehole which has been drilled using one of the methods described above to a depth that is well below the known contaminated zone and in or [to the top of a] confining/semi-confining zone, if possible. The surface casing will then be grouted in place and allowed to set for 24 hours before well drilling continues.

6.7.5 Development of Monitoring Wells

Monitoring wells will be developed by pumping until specific conductance, pH, [and clarity of the groundwater] have stabilized.

6.7.6 Surveying of Wells

Following the installation of the monitoring wells, the top of the well casing from which water level measurements are to be taken will be surveyed to a vertical accuracy of 0.01 foot. The horizontal location of each well will also be surveyed to third order accuracy. Locations

[bold items enclosed in brackets denote *changes* from original text]

0001351

will be accurately depicted on a site map. [Vhere possible, the] well surveys will be tied into USGS datum.

6.8 GROUNDWATER SAMPLING

Sampling of the existing monitoring wells and newly installed monitoring wells will consist of the following four activities:

- o Measurement of depth to water level and total depth of the well (to calculate well volume);
- o Evacuation of static water (purging);
- o Measurement and recording of groundwater temperature, pH, ,and conductivity; and
- o Collection of the sample.

Sampling of residential and public supply wells will involve the following:

- o Estimation of the standing water column based on a known or estimated well depth and a known or estimated water level, in addition to determining the volume of any holding tanks which may be in place between the well and the sampling location;
- o Evacuation of the static water (purging);
- o Measurement and recording of groundwater temperature, pH, and conductivity; and
- o Collection of the sample.

These activities are described below.

6.8.1 Measurement of Uater Level and Well Volume

Prior to sampling, the static water level and total depth of the well will be measured with a calibrated, weighted tape. Care will be taken to decontaminate equipment between uses to avoid cross-contamination of wells. For residential wells and public supply wells, these values will be determined from background information obtained.

[Bold items enclosed in brackets denote changes from original text]

If the information is unavailable, estimates will be made based on interviews with the resident or in the case of the public supply well, the appropriate municipal authority.

The number of linear feet of static water (the standing water column) will be determined by calculating the difference between the static water level and the total depth of the well. The static volume will be calculated using the formula:

$$V = Tr^2(0.163)$$

Where:

V = Static volume of well in gallons;

T = Standing water column, measured in feet;

r = Inside radius of well casing in inches; and

0.163 = πr^2 h A constant conversion factor which compensates for factor for the conversion of the casing radius from inches to feet, the conversion of cubic feet to gallons, and π (pi).

When possible, groundwater samples collected from residential and public supply wells will be taken from an outlet or faucet nearest the vell. If there is a holding tank betveen the well and the faucet, purging of the well must include at least one volume of the holding tank.

All information concerning the purging of static water will be recorded for each well. [In addition, any immiscibles (i.e., sinkers and/or floaters) in wells will be detected using an oil/water interface probe.]

6.8.2 Purging Static Water

Before a groundwater sample is obtained, the static water must be purged to ensure that a representative groundwater sample is taken. A minimum of three volumes of the standing water column will be purged

[Bold items enclosed in brackets denote changes from original text]

from the well prior' to collecting the samples. [Monitoring well purging will continue until groundwater temperature, pH, and specific conductance have stabilized for three consecutive measurements.] If the well does not recover quickly enough to permit the removal of three static water volumes, the well will be pumped or bailed dry and sampled immediately following a sufficient recovery. Purging will be performed using decontaminated stainless steel or Teflon bailers, dedicated PVC bailers, or pumps. The water removed from the well during the purging process will be discarded on the ground surface away from the well, or as otherwise directed in the SQAPP.

6.8.3 Sample Collection

Sampling personnel will take precautions against cross-contamination when using one sampling apparatus for a series of samples. If possible, "clean" or "background" samples will be taken first. Before and after each sample is taken, the apparatus will be decontaminated as specified in Section 6.10. Sample collection procedures are as follows:

- A decontaminated stainless steel or Teflon bailer, or a dedicated PVC bailer will be used to collect the groundwater samples from PVC monitoring wells. Only decontaminated stainless steel or Teflon bailers will be used to collect samples from stainless steel wells.

- [Groundwater samples from] residential [and/or public supply] well[s] will be collected'from existing plumbing as close as possible to the pump and prior to any water [treatment system, if possible].

- When transferring water from the bailer to sample containers, care will be taken to avoid agitating the sample, which promotes the loss of volatile constituents.

- Samples to be analyzed for dissolved metals will be filtered in the field using a .45-micron filter and preserved with nitric acid prior to shipment for analysis. The filtering equipment will be decontaminated between samples to avoid cross contamination. [Corresponding total metals samples will be collected where dissolved (filtered) metals are collected.]

- Samples to be analyzed for total metals will not be field filtered, but will be preserved with nitric acid prior to shipment for analysis.

[Bold items enclosed in brackets denote changes from original text]

- Any observable physical characteristics of the groundwater (e.g., color, sheen, odor, turbidity,) as it is being sampled will be recorded in the logbook.

- Sample temperature, pH, and specific conductance will be measured and recorded [for *each* groundwater sample Collected.]

- Veather conditions (e.g., air temperature, windy conditions, recent heavy rainfall, drought conditions) at the time of sampling will be recorded.

6.9 SURFACE VATER/SEDIMENT SAMPLING

6.9.1 Surface Vater Sampling

Surface water samples will be collected in accordance with the following procedures:

- A pre-cleaned, widemouthed glass bottle or stainless steel cup to be used for sample collection will be submerged into the surface water and rinsed three times. The bottle will then be submerged to collect the sample.

- The sample will be collected in such a manner as to minimize agitation of the water. Agitation promotes the loss of volatile organics and increases the dissolved oxygen content.

- Samples will be taken at depth by Kemmerer bottle or similar device designed to open and close at the required depth.

- The water sample will be transferred into the appropriate bottles required for chemical analyses.

- The temperature, pH, and specific conductance of the water will be measured and, if necessary, stream current velocity (cubic feet/second) will be estimated and recorded at the time the sample is taken.

- Any observable physical characteristics of the surface water (e.g., color, odor, turbidity) during the sampling period will be recorded.

- Veather conditions (e.g., air temperature, wind direction and velocity, recent heavy rainfalls, and drought conditions) at the time of sampling will be recorded.

- Certain vorkplan requirements may entail the compositing of surface water samples. Several aliquots of equal volume may be collected from predetermined locations in order to characterize an area of a surface water body, a length

[Bold items enclosed in brackets denote changes from original text]

interval of a stream channel, or various depths. Collection of the aliquots will be combined in a suitable pot or bottle as a composite sample. During the compositing process, measures will be taken to protect the sample from wind, dust, rainfall, temperature variations, and other outside factors.

6.9.2 Sediment Sampling

Sediment samples will be collected using an Ekman dredge, stainless steel corers, bucket augers, or other standard equipment. Techniques described for soil sampling in sections 6.5 and 6.6 will apply to sediment sampling activities as well.

6.10 [EQUIPMENT] DECONTAMINATION

Sampling methods and equipment have been chosen to minimize decontamination requirements and the possibility of cross-contamination. Any which cannot be effectively decontaminated such as sample tubing, rope, etc., will be disposed of after sampling. [As stated in Section 6.6.2, all drilling equipment (i.e., drill rods, drill bits, auger flights, etc.) will be sandblasted before arrival on site (i.e., NAS Pensacola).] Unless otherwise specified in the SQAPP and workplan, the decontamination procedure of investigation/sampling equipment will be as follows:

- Steam clean [and wire brush] (drilling equipment only);
- [Clean with tap water and laboratory detergent (e.g., Alconox) using a brush if necessary to remove particulate matter and surface films;
- Rinse with tap water;
- Rinse twice with nanograde isopropanol;
- Rinse with organic-free water and allow to air dry;
- If organic-free water is not available, allow equipment to air dry as long as possible after isopropanol rinse;
- If equipment is to be stored or transported, wrap with aluminum foil to prevent contamination.]

PVC sampling implements (bailers) will be dedicated and hence only involve the decontamination regimen described above prior to dedication.

[Bold items enclosed in brackets denote changes from original text]

Teflon implements used for the collection of samples for [organic compounds and/or] metals analysis will require the following decontamination procedure:

- o [Clean with tap water and laboratory detergent (e.g., Alconox) using a brush if *necessary* to remove particulate matter and surface films;
- o Rinse vith tap vater;
- o Rinse with 10% nitric acid solution;
- o Rinse with tap water;
- o Rinse twice with nanograde isopropanol;
- o Rinse with organic-free water and allow to air dry;
- o If organic-free water is not available, allow equipment to air dry as long as possible after isopropanol rinse;
- o Wrap vith aluminum foil.]

All investigation-derived waste will be contained in labeled 55-gallon drums. Arrangements will be made to transport the drums to a waste storage area on the Naval Air Station.

6.11 SAMPLE CONTAINERS

The volumes and containers required for the sampling activities are included in Tables 6-2 through 6-4. All sample containers will be obtained from an approved retail source, such as I-Chem, [that prepares containers in accordance with USEPA bottle washing procedures.] The containers will be series [3000] which are pre-cleaned, [and are] subject to a quality control analysis. [All glass containers will have Teflon-lined *caps.]* The bottles will be shipped from the ASC or obtained in the field directly from I-Chem in sealed boxes. If the sample containers are shipped from the ASC, a trip blank will be included with each cooler containing volatile organic compound sample containers. These procedures are incorporated in E & E's Laboratory and Field Personnel Chain-of-Custody Documentation and Quality Assurance/ Quality Control Procedures Manual, July 1987.

[Bold items enclosed in brackets denote changes from original text]

Table 6-2

SAMPLE CONTAINERS AND VOLUMES FOR SOIL SAMPLES

Type of Analysis	Type and Size of container	Number of Containers and Sample Volume (per sample)
Purgeable (Volatile) Organics	4- or 8-oz. glass jar with Teflon-lined cap	One (1); fill completely, no air space
Extractable Organics, PCBs, Pesticides	8-oz. glass jar with Teflon-lined cap	One (1); fill completely
Metals	8-oz. glass jar with Teflon-lined cap	One (1); fill half-full
Cyanides	8-oz. glass jar with Teflon-lined cap	One (1); fill completely
2,3,7,8-TCDD*	8-oz. glass jar with Teflon-lined cap	One (1); fill completely

*2,3,7,8-TCDD (tetrachlorodibenzodioxins) is a subcontracted analysis.

Note: 1) All sample bottles will be prepared in accordance with USEPA bottle washing procedures. These procedures are incorporated in E & E's Laboratory and Field Personnel Chain-of-Custody Documentation and Quality Assurance/Quality Control Procedures Manual, July 1987.

2) Several types of analyses may be performed on samples from the same container depending on sample size requirements.

3) Sample preservation and holding times are presented in Tables 7-1 and 7-2.

Table 6-3

SAMPLE CONTAINERS AND VOLUMES
FOR WATER SAMPLES

of Analysis	Type and Size of Container	Number of Containers and Sample Volume (per sample)
Purgeable (Volatile) organics	40-ml glass vials with Teflon-backed septums	Two (2); fill completely; no air space
Extractable Organics, PCBs, Pesticides	1/2-gallon amber glass bottles with Teflon-lined caps	Two (2): total volume approx. 1 gallon; fill 7/8 full
notal.	1-litor polyothylono bottlo with polyethylene-lined cap	On (1); fill 7/8 full
Cyanides	1-litor polyothylono bottlo with polyethylene-lined cap	On (1); fill 7/8 full
Petroleum Hydrocarbons	1-liter amber glass bottlo with [Teflon]-lined cap	On (1); fill completely

Note: All sample bottles will bo prepared in accordance with USEPA bottlo washing procedures. These procoduros are incorporated in I & E's Laboratory and Field Personnel Chain-of-Custody Documentation and Quality Assurance/Quality Control Procedures Manual, July 1987.

Table 6-4

ADDITIONAL SAMPLE CONTAINER AND VOLUME INFORMATION

Type of Analysis	**Type and Size of Container**	Number of Containers and Sample Volume (per sample)
Total Organic Carbon	125-rl polyothylono bottlo with polyethylene-lined cap	**One** (1); fill complotoly
Sulfide	1-litor polyethylone bottlo with polyethylene-lined cap	One (1); fill completely, no air spaco
Acidity Alkalinity **pH** Dissolved Solids Suspended Solids	1-litor polyothylono bottlo with polyethylene-lined cap (Multiple analyses) a11 from **one** bottlo	**One** (1); fill complotely
Hardness	1-litor polyothylono bottlo with polyothylono-lined cap	One (1); fill 7/8 full, or can take out of metals bottle
Chloride	1-litor polyothyleno bottle with polyothyleno-lined cap	**One** (1); fill completely
Sulfate	1-litor polyothylono bottle with polyethylono-lined cap	**One** (1); fill completely
Nitrato	1-litor polyothylone bottlo with polyethylene-lined cap	**One** (1); fill completely
Nitrite	1-litor polyothylone bottlo with polyothylono-lined cap	**One** (1); fill completely
Total Phenol	1-litor amber glass bottlo with (Teflon)-lined cap	One (1); fill completely
Dissolved Oxygon	BOD bottle	One (1); fill completely
Total Organic Halogen **(TOX)**	1-liter amber glass bottle with (Teflon)-lined cap	One (1); fill completely, no air spaco
Ammonia-nitrogon	1-liter polyethylene bottlo with polyothylone-lined cap	One (1); fill completely
BOD_5	1-liter polyethylene bottle with polyothylone-lined cap	One (1); fill complotely

Table 6-4 (Cont.)

Type of Analysis	Type and Size of Container	Number of Containers and Sample Volume (per sample)
COD	1 125-ml polyothylono bottlo with polyethylene-lined cap	On (1); fill complotoly
Color	1-litor polyothylono bottlo with polyothylono-linod cap	On (1); fill corplotoly
Fluoride	1-litor polyothylono bottlo with polyothylono-linod cap	On (1); fill corplotoly
Total Kjoldahl Nitrogen	1-litor polyothylono bottlo with polyethylene-lined cap	One (1); fill completely
Hexavalent Chromium	1 125-ml polyothylono bottlo with polyethylene-lined cap	On (1); fill corplotoly
Mercury	1-,litor polyothylono bottlo with polyothylono-linod cap	On (1); fill completely
Oil and Grease	1-litor amber glass bottlo with [Teflon]-lined cap	One (1): fill completely
Total Recoverable Hydrocarbon8	1-litor amber glass bottlo with [Teflon]-lined cap	On (1): fill completely
Orthophosphate	1-litor polyothylono bottlo with polyothylono-linod cap	On (1); fill completely
Total phosphorus	1-litor polyothylono bottlo with polyothylono-linod cap	On (1); fill completely
Specific Conductance	1-litor polyothylono bottlo with polyothylono-linod cap	On (1): fill completely
Turbidity	1-litor polyothylono bottlo with polyethylene-lined cap	On (1); fill completely
Sulfite	1-litor polyothylono bottlo with polyethylene-lined cap	One (1); fill corplotoly

Note: Several typos of analyses may be performed on samples from tho saw container depending on preservative (see Section 7.4) and sample size requirements.

6.12 FIELD QA/QC SAMPLES

In general, the preparation of field QA/QC samples will be in accordance with Naval Energy and Environmental Support Activity (NEESA) _.n_ and Ch Analysis Quality Assurance Requirements f the Navy Installation Restoration Program, June 1988, the Florida Department of Environmental Regulation (FDER) draft directive Field Quality Control Blanks, and established USEPA guidelines.

During the collection of samples to be analyzed for laboratory screening parameters (see Section 9.1), field QA/QC samples will consist of approximately one field duplicate sample per 20 samples per medium sampled per sampling event per site. No other field control samples will be prepared for analytical screening samples.

During the collection of samples to be analyzed for non-screening laboratory parameters field QA/QC samples will be collected as follows:

- Trip blanks - One per day per sampling event per site;
- Equipment rinsates - one per medium sampled per day per sampling event per site;
- Field blanks - one per sampling event per site;
- [o Preservative blanks - One per sampling event per site; and]
- Duplicates - one per 10 samples per medium sampled per sampling event per site.

Trip blanks will be analyzed for volatile organic compounds only. Duplicates and equipment rinsates will be analyzed for the same parameters as the samples for which they were prepared.

[Bold'items enclosed in brackets denote changes from original text]

7. SAMPLE CUSTODY

This section describes standard operating procedures for sample identification and chain-of-custody to be utilized for all NASP field activities. The purpose of these procedures is to ensure that the quality of the samples is maintained during their collection, transportation, and storage through analysis. All chain-of-custody requirements comply with standard operating procedures indicated in USEPA sample handling protocol. All sample control and chain-of-custody procedures applicable to the E & E ASC are presented in E & E's Laboratory and Field Personnel Chain-of-Custody Documentation and Quality Assurance/Quality Control Procedures Manual, July 1987. The manual is currently under revision to incorporate the use of a computerized system, LABMIS, for sample tracking. In the interim, SOPs describing LABHIS procedures have been developed, these are included in Appendix E.

Sample identification documents must be carefully prepared so that sample identification and chain-of-custody can be maintained and sample disposition controlled. Sample identification documents include:

- Field notebooks,
- Sample label,
- Custody seals, and
- Chain-of-custody records.

7.1 CHAIN-OF-CUSTODY

The primary objective of the chain-of-custody procedures is to provide an accurate written or computerized record that can be used to trace the possession and handling of a sample from collection to completion of all required analyses. A sample is in custody if it is:

(Bold items enclosed in brackets denote changes from original text]

- In someone's physical possession;
- In someone's view;
- Locked up; or
- Kept in a secured area that is restricted to authorized personnel.

7.1.1 Field Custody Procedures

- As few persons as possible should handle samples.
- Sample bottles must be obtained precleaned from an approved retail source such as I-Chem. Coolers or boxes containing cleaned bottles should be sealed vith a custody tape seal during transport to the field or while in storage prior to use. Sample bottles from unsealed coolers or boxes, or which appear to have been tampered vith will not be used.
- The sample collector is personally responsible for the care and custody of samples collected until they are transferred to another person or dispatched properly under chain-of-custody rules.
- The sample collector will record sample data in the field notebook.
- The site team leader will determine whether proper custody procedures were followed during the fieldwork and decide if additional samples are required.

7.1.2 Sample Tags

Sample tags attached to or affixed around the sample container must be used to properly identify all samples collected in the field. The sample tags are to be placed on the bottles so as not to obscure any QA/QC lot numbers on the bottles; sample information must be printed in a legible manner using waterproof ink. Field identification must be sufficient to enable cross-reference vith the logbook. For chain-of-custody purposes, all QC samples are subject to exactly the same custodial procedures and documentation as "real" samples. (See Appendix F for an example sample label.)

[Bold items enclosed in brackets denote *changes* from original text]

7.1.3 Chain-of-Custody Record

The chain-of-custody record must be fully completed at least in duplicate by the field technician who has been designated by the project manager as responsible for sample shipment to the appropriate laboratory for analysis. (See Appendix F, Custody Forms.) In addition, if samples are known to require rapid turnaround in the laboratory because of project time constraints or analytical concerns (e.g., extraction time or sample retention period limitations, etc.), the person completing the chain-of-custody record should note these constraints in the "Remarks" section of the custody record. The custody record should also indicate any special preservation techniques or whether the samples need to be filtered.

7.1.4 Transfer of Custody and Shipment

- The coolers in which the samples are packed must be sealed and accompanied by a chain-of-custody record. When transferring samples, the individuals relinquishing and receiving them must sign, date, and note the time on the chain-of-custody record. This record documents sample custody transfer.

- Samples must be dispatched to the ASC for analysis with a separate chain-of-custody record accompanying each shipment. Shipping containers must be sealed with custody seals for shipment to the laboratory. The method of shipment, name of courier, and other pertinent information are entered in the "Remarks" section of the chain-of-custody record.

- All shipments must be accompanied by the chain-of-custody record identifying their contents. The original record accompanies the shipment. The other copies are distributed appropriately to the site team leader and project manager.

- If sent by mail, the package is registered with return receipt requested. If sent by common carrier, a bill of lading is used. Freight bills, Postal Service receipts, and bills of lading are retained as part of the permanent documentation.

- [Shipments of radioactive samples will conform to U.S. Department of Transportation and any other applicable regulations.]

[Bold items enclosed in brackets denote changes from original text]

7.1.5 Laboratory Custody Procedures

A sample custodian accepts custody of the shipped samples from the carrier and enters preliminary information about the package into the Package Receipt Log, including the initials of the person delivering the 'package and the status of the custody seals on the coolers (i.e., broken vs. unbroken). The custodian responsible for sample log-in will open the package, check the contents, and verify that the information on the chain-of-custody agrees with samples received. Pertinent information as to shipment, pickup, and courier must be entered into the "Remarks" section of the chain-of-custody record. The custodian will also document the temperature of the cooler, pH of samples in the shipment and the general condition of the sample containers. The custodian then enters the client and client sample identification information into LABMIS using procedures specified in the sample log-in SOP (see Appendix E). In addition, the custodian will note the status of the custody seals on the sample containers (i.e., broken Vs. unbroken) and will enter this information into LABMIS.

Each sample is assigned a unique laboratory identification number and a bar code label is generated for each container associated with that sample. The bar code label allows easy tracking of samples within the ASC by simply scanning the bar code every time the sample is taken or returned to sample management. A computer audit of the sample container will list all of these transactions as well as the analyst or custodian handling the sample. The custodian responsible for sample log-in will complete the package receipt log and generate a hard-copy sample log for the shipment. Any discrepancy or improper preservation will be noted by the ASC as an out-of-control event and will be documented on a QA/QC discrepancy form (provided in Appendix E) with the corrective action taken.

7.1.6 Custody Seals

Custody seals are preprinted adhesive-backed seals with security slots designed to break if the seals are disturbed. A custody seal is placed over the cap of individual sample bottles by the sampling technician. Sample shipping containers (coolers, cardboard boxes, etc., as

[Bold items enclosed in brackets denote changes from original text]

appropriate) are sealed in as many places as necessary to ensure security. Seals must be signed and dated before use. On receipt at the laboratory, the custodian must check (and certify, by completing package receipt log and LABMIS entries) that seals on boxes and bottles are intact. Strapping tape should be placed over the seals to ensure that seals are not accidentally broken during shipment.

7.2 DOCUMENTATION

7.2.1 Sample Identification

All containers of samples collected from the project will be identified using the following format on a label or tag fixed to the sample container (labels are to be covered with Mylar tape):

P-XX-S/W-YYY-A-O/D

- P- Identified the sample as originating from the NAS Pensacola project.
- XX- Numerical site designation (01-37).
- S/W- An "S" designates a soil/sediment sample; "W" identifies it as a water sample.
- YYY- Indicates the sample location number (001-999).
- A- Indicates the depth interval for multiple depth sample collection at a single location (A-Z).
- O/D- "O" designates an original sample; "D" identifies it as a duplicate.

For example, a soil sample collected from the second sample depth interval in a soil boring at Site 17 would be identified as P17S001BO.

Each sample will be labeled, chemically preserved, if required and sealed immediately after collection. To minimize handling of sample containers, labels will be filled out prior to sample collection. The sample label will be filled out using waterproof ink and will be firmly affixed to the sample containers and protected with Mylar tape. The sample label will give the following information:

- Name of sampler,
- Date and time of collection,

[Bold items enclosed in brackets denote changes from original text]

- Sample number,
- Analysis required,
- pH, and
- Preservation.

7.2.2 Daily Logs

Daily logs and data forms are necessary to provide sufficient data and observations to enable participants to reconstruct events that occurred during the project and to refresh the memory of the field personnel if called upon to give testimony during legal proceedings. All daily logs will be kept in a bound waterproof notebook containing numbered pages. All entries will be made in waterproof ink, dated, and signed. No pages will be removed for any reason. Corrections will be made according to the procedures given at the end of this section. The daily logs will include a site log and a task log.

The Site Log is the responsibility of the site team leader and will include a complete summary of the day's activity at the site.

The Task Log will include:

- Name of person making entry (signature).
- Names of team members on-site.
- Levels of personnel protection:
  - Level of protection originally used;
  - Changes in protection, if required; and
  - Reasons for changes.
- Time spent collecting samples.
- Documentation on samples taken, including:
  - Sampling location and depth station numbers;
  - Sampling date and time, sampling personnel;
  - Type of sample (grab, composite, etc.); and
  - Sample matrix.

[Bold items enclosed in brackets denote *changes* from original text)

- On-site measurement data.
- Field observations and remarks.
- Weather conditions, wind direction, etc.
- Unusual circumstances or difficulties.
- Initials of person recording the information.

7.2.3 Corrections to Documentation

Notebook

As with any data logbooks, no pages will be removed for any reason. If corrections are necessary, these must be made by drawing a single line through the original entry (so that the original entry can still be read) and writing the corrected entry alongside. The correction must be initialed and dated. Host corrected errors will require a footnote explaining the correction.

Sampling Forms

As previously stated, all sample identification tags, chain-of-custody records, and other forms must be written in waterproof ink. none of these documents are to be destroyed or thrown away, even if they are illegible or contain inaccuracies that require a replacement document.

If an error is made on a document, the individual responsible for preparation of the document may make corrections by crossing a line through the error and entering the corrected information. The incorrect information should not be obliterated. Any subsequent error discovered on a document should be corrected by the person who made the entry. All corrections must be initialed and dated.

7.2.4 Photographs

Photographs will be taken as directed by the team leader. Documentation of a photograph is crucial to its validity as a representation of an existing situation. The following information will be noted in the task log concerning photographs:

[Bold items enclosed in brackets denote changes from original text]

- Date, time, location photograph was taken;
- Photographer (signature);
- Weather conditions;
- Description of photograph taken;
- Reasons why photograph was taken;
- Sequential number of the photograph and the film roll number; and
- Camera lens system used.

After the photographs have been developed, the information recorded in the field notebook will be transferred to the back of the photographs and signed by the photographer.

7.3 SAMPLE HANDLING, PACKAGING, AND SHIPPING

The transportation and handling of samples must be accomplished in a manner that not only protects the integrity of the sample, but also prevents any detrimental effects due to the possible hazardous nature of samples. Regulations for packaging, marking, labeling, and shipping hazardous materials are promulgated by the United States Department of Transportation (DOT) in the Code of Federal Regulations, 49 CFR 171 through 177.

All chain-of-custody requirements must comply with standard operating procedures in the USEPA sample handling protocol. All sample control and chain-of-custody procedures applicable to the B & E ASC are presented in E & E's Laboratory and Field Personnel Chain-of-Custody Documentation and Quality Assurance/Quality Control Procedures Manual, July 1987 and internal standard operating procedures included in Appendix E.

7.3.1 Sample Packaging

Samples must be packaged carefully to avoid breakage or contamination and must be shipped to the laboratory at proper temperatures. The following sample packaging requirements will be folloved:

[Bold items enclosed in brackets denote *changes* from original text]

- Sample bottle lids must never be mixed. All sample lids must stay with the original containers.

- The sample volume level can be marked by placing the top of the label at the appropriate sample height, or with a grease pencil. This procedure will help the laboratory to determine if any leakage occurred during shipment. The label should not cover any bottle preparation QA/QC lot numbers.

- All sample bottles are placed in a plastic bag to minimize the potential for vermiculite contamination.

- Shipping coolers must be partially filled with packing materials and ice when required, to prevent the bottles from moving during shipment.

- The sample bottles must be placed in the cooler in such a way as to ensure that they do not touch one another.

- The environmental samples are to be cooled. The use of "blue ice" or some other artificial icing material is preferred. If necessary, ice may be used, provided that it is placed in plastic bags. Ice is not to be used as a substitute for packing materials.

- Any remaining space in the cooler should be filled with inert packing material. Under no circumstances should material such as sawdust, sand, etc., be used.

- A duplicate custody record and traffic reports, if required must be placed in a plastic bag and taped to the bottom of the cooler lid. Custody seals are affixed to the sample cooler.

Note: The ASC does not knowingly accept samples with high levels of radioactivity or dioxins, or any samples for which ASC handling procedures may be insufficient to protect laboratory employees. Project staff and field staff must take all feasible precautions, including discussions with site officials and company representatives, and site observations to ensure that neither they nor ASC personnel are exposed to unduly hazardous materials. Note that field staff are (in many cases) equipped with personal protection and breathing apparatus not available to ASC personnel.

7.3.2 Shipping Containers

Environmental samples will be properly packaged and labeled for transport and dispatched to the Ecology and Environment, Inc., Analytical Services Center, located at 4285 Genesee Street, Buffalo, New

[Bold items enclosed in brackets denote changes from original text]

York, 14225. A separate chain-of-custody record must be prepared for each container. The following requirements for shipping containers will be followed.

Shipping containers are to be custody-sealed for shipment as appropriate. The container custody seal will consist of filament tape wrapped around the package at least twice and custody seals affixed in such a vay that access to the container can be gained only by cutting the filament tape and breaking a seal.

Field personnel will make arrangements for transportation of samples to the ASC. When custody is relinquished to a shipper, field personnel will telephone the ASC custodian (716/631-0360) to inform him of the expected time of arrival of the sample shipment and to advise him of any time constraints on sample analysis. The ASC must be notified as early in the week as possible, and in no case later than 3 p.m. (eastern time zone) on Thursday, regarding samples intended for Saturday delivery. Samples will be retained by the ASC for 30 days after the final report is submitted.

7.3.3 Harking and Labeling

The following sample marking and labeling guidelines will be followed:

- Use abbreviations only where specified
- The words "This End Up" or "This Side Up" must be clearly printed on the top of the outer package. Upward pointing arrows should be placed on the sides of the package. The words "Laboratory Samples" should also be printed on the top of the package.
- After a sample container has been sealed, two chain-of-custody seals are placed on the container, one on the front and one on the back. The seals are protected from accidental damage by placing strapping tape over them.
- All samples and sample coolers will be packaged, shipped, labeled, and placarded in accordance with the International Air Transport Association Dangerous Goods Regulations or with 40 DFR, as applicable.

[Bold items enclosed in brackets denote *changes* from original text]

7.4 SAMPLE PRBSBRVATION AND HOLDING TIMES

All samples, including field blanks, will be preserved in the field and pH paper will be used to determine if a sufficient amount of preservative has been used. A list of preservatives and holding times for each type of priority pollutant analyses are included in Tables 7-1 and 7-2. Additional preservation requirements and holding times for non-priority pollutant analyses are listed in 40 CFR, Part 136, July 1, 1987.

[Bold items enclosed in brackets denote changes from original text]

Table 7-1

SAMPLE PRESERVATION AND HOLDING TIMES
FOR SOIL AND WATER SAMPLES

Parameter	Preservative	Holding Time	
		Soil	Water
Volatiles by GC/MS, and GC	Cool, 4°C[a]	14 days	14 days
PCB/Pesticides	Cool, 4°C[b]	Extract within 7 days, analyze 40 days	Extract within 7 days, analyze 40 days
Extractable Organics	cool, 4°C	Extract within 7 days, analyze 40 days	Extract within 7 days, analyze 40 days
Metals	HNO_3 to pH<2	6 months	6 months
Mercury	HNO_3 to pH<2	28 days	28 days
Cyanide	NaOH to pH>12 Cool 4°C, add 0.6 g ascorbic acid if residual chlorine present	14 days	14 days
[Hexavalent] Chromium	[Cool, 4°C]	24 hours	24 hours

Source: [40 CFR, Part 136, July 1, 1987]

[a] Volatile samples for aromatic and haloethane compounds should be preserved with sodium bisulfate or HCL to a pH<2.

[b Any water samples suspected to contain residual chlorine (e.g., chlorine-treated water) will be preserved with a 10 percent solution of sodium thiosulfate before analysis for pesticides/PCBS.]

0001363

Table 7-2

ADDITIONAL SAMPLE PRESERVATION AND HOLDING TIME INFORMATION

Type of Analysis	Preservation	Maximum Time
Total Organic Carbon	[H_2SO_4] to pH > 2 Cool to 4°C	28 days
Sulfide	0.048 zinc acetate, [plus NaOH to pH > 9] [Cool to 4°C]	7 days
Acidity	Cool to 4°C	14 days
Alkalinity	[cool to 4°C]	14 days
pH		ASAP
Dissolved Solids	[Cool to 4°C]	7 days
Suspended Solids	[cool to 4°C]	7 days
Hardness	HNO_3 to pH < 2	6 months
Chloride	Cool to 4°C	28 days
Sulfate	Cool to 4°C	28 days'
Nitrate	[Cool to 4°C]	[48 hours]
Nitrite	[Cool to 4°C]	48 hours
Total Phenol	[H_2SO_4 to pH < 2 Cool to 4°C]	28 days
Dissolved Oxygen		[ASAP]
Total Organic Halogen (TOX)	[H_2SO_4 to pH < 2 Cool to 4°C]	7 days
Ammonia-nitrogen	[H_2SO_4 to pn < 2 Cool to 4°C] .	28 days
BOD_5	Cool to 4°C	48 hours

Table 7-2 (Cont.)

Type of Analysis	Preservation	Maximum Time
COD	[H_2SO_4 to pH < 2 cool to 4°C]	28 days
Color	Cool to 4°C	48 hours
Fluoride	Cool to 4°C	28 days
Total Kjeldahl Nitrogen	H_2SO_4 to pH < 2 [Cool to 4°C]	28 days
Hexavalent Chromium	Cool to 4°C	24 hours
Mercury	HNO_3 to pH < 2 [cool to 4°C]	28 days
Total Recoverable Hydrocarbons	H_2SO_4 to pH < 2 [cool to 4°C]	28 days
Oil and Grease	H_2SO_4 to pH < 2 [cool to 4°C]	28 days
Orthophosphate	Cool to 4°C	48 hours
Total phosphorus	H_2SO_4 to pH < 2 [Cool to 4°C]	28 days
Specific Conductance	Cool to 4°C	28 days
Turbidity	Cool to 4°C	48 hours
Sulfite		Analyze [immediately]

Source: [40 CFR, Part 136, July 1, 1987]

0001364

8. CALIBRATION PROCEDURES AND FREQUENCY

All instruments and equipment used during sampling and analysis will be operated, calibrated, and maintained according to the manufacturer's guidelines and recommendations as well as criteria set forth in the applicable analytical methodology references. Operation, calibration, and maintenance will be performed by personnel properly trained in these procedures. Documentation of all routine and special maintenance and calibration information will be maintained in an appropriate logbook or reference file, and will be available on request. Table 8-1 lists the major instruments to be used for sampling and analysis. [Procedures for **procurement** and material control are included in Appendix E.] Brief descriptions of calibration procedures for major field and laboratory instruments follow.

8.1 FIELD INSTRUMENTATION

HNu Photoionizer

Static or dynamic gas generation systems can be utilized for calibration of the instrument. A number of such systems for generating test atmospheres for various gases have been described by G.O. Nelson in "Controlled Test Atmospheres," Ann Arbor Science Publishers, Ann Arbor, Michigan (1971).

The most convenient packages for calibration are the non-toxic analyzed gas mixtures available from HNu Systems in pressurized containers (Catalogue #101-350).

A rapid procedure for calibration involves bringing the probe and readout in close proximity to the calibration gas, cracking the valve on the tank and checking the instrument reading. This provides a useful spot check for the instrument.

The recommended and most accurate procedure for calibration of the instrument from a pressurized container is to connect one side of a "T"

[Bold items enclosed in brackets denote changes from original text]

Table 8-1

LIST OF MAJOR INSTRUMENTS TO BE USED FOR SAMPLING AND ANALYSIS PROGRAM*

- MSA 260 O_2 Explosimeter
- HNu PI-101 Photoionisation Analyzer
- Organic Vapor Analyzer Foxboro (12B)
- EM-31 Geonics Electromagnetic Induction Device
- Temperature/Conductivity Meter - Portable
- Hewlett Packard (HP) 1000 computer with RTE-6 operating system; equipped with Aquarius software for control and data acquisition from up to four gas chromatograph/mass spectrowtor (GC/MS) systems; combined Wiley and National Bureau of Standards (NBS) mass spectral library: and data archiving on magnetic tape
- HP5995C GC/MS equipped with packed columns for analysis of volatile organic compounds
- HP5970 Mass Spectral Detector intorfacod with an HP5890 GC for both packed and capillary column determination of all priority pollutant compounds
- Tekmar LSC-2 Liquid Sample Concontrator for volatile organic analysis
- Hewlett Packard Model 7675A Automated Purge and Trap Sampler
- Varian 6000 and 3700 Gas Chromatrographs (total 61 equipped with flame ionization, electron capture, photoionization and Hall detectors as appropriate for various analyses, and intorfacod to a Varian micro-computer for data reduction
- Spectra-Physics Model SP 4100 and SP 4270 Computing Integrators
- Perkin Elmer 50002 and 30301; Fully Automated Atomic Absorption Spoctrophotowtors (AAS) with Furnace Atomizer and Zeeman background correction system
- Perkin Elmer PE II Inductively Coupled Argon Plasma (ICAP) Spectrometer
- Buck Scientific Mercury Analyzer Model 400

*Calibrated. maintained, and operated according to manufacturer's specifications and a11 QC protocols within tho appropriate methodology. Both lamps (10.2 eV, 11.7 eV) will bo used with tho HNu Photoionizer. Isobutylene will be used as tho calibration gas. The HNu, tho OVA, and tho MSA 260 O_2 Explosimeter will bo calibrated, at a minimum, before use each day, or as required if field problems arise.

0001365

to the pressurized container of calibration gas, another side of the "T" to a rotameter, and the third side of the "T" directly to the 8-inch extension to the photoionization probe. The valve of the pressurized container is cracked until a slight flow is indicated on the rotameter. The instrument draws in the volume of sample required for detection, and the flow in the rotameter indicates an excess of sample. The span Potentiometer is adjusted so that the instrument is reading the exact value of the calibration gas. (If the instrument span setting is changed, the instrument should be turned back to the standby position and the electronic zero should be readjusted, if necessary.)

Calibration with toxic gases should be performed in a hood since the 101 is a non-destructive analyzer. The calibration gas should be prepared in the same matrix (air, nitrogen, hydrogen, etc.) in which it is to be measured, otherwise an inaccurate reading may be obtained. The increased response which is seen in oxygen free gases can be attributed to a reduction in the quenching of ions by oxygen (actually O_2-) and is typical of any ionization detector. The quenching effect of oxygen is constant from about 10% O_2 to very high levels.

If a gas standard prepared in nitrogen is to be used for measurements in air, a 0.5- or 1-liter bag will be filled with the standard, then 50 or 100 cc of pure oxygen will be added to bring the level to 10-12%. Any error between this value and 20% oxygen is quite small. If the sample to be measured is in nitrogen, standards should be prepared in nitrogen.

- Conductance, Temperature, and pH Tester

Temperature and conductance instruments are factory calibrated. Temperature accuracy can be checked against an NIST certified thermometer prior to field use if necessary. Conductance accuracy may be checked with a solution of known conductance and recalibration can be instituted, if necessary.

To recalibrate conductance, remove the black plug revealing the adjustment potentiometer screw. Add standard solution to cup, discard, and refill. Repeat procedure until the display indicates the same value twice in a row. Adjust the potentiometer until the display indicates the known value of conductance. To increase the display reading, turn

[Bold items enclosed in brackets denote changes from original text]

the adjustment potentiometer screw counterclockwise (clockwise to decrease).

To standardize the pH electrode and meter, place 7.0 buffer solution in the cup, discard and refill 3 times. Adjust the "ZERO" potentiometer on the face' of the tester so that the display indicates 7.00.

Then repeat the fill/rinse procedure using the 4.0 or 10.0 buffer (depending on where you expect the actual measurement to be). Adjust the "SLOPE" potentiometer on the face of the tester so that the display indicates the value of the buffer chosen.

Note: There is interaction between the "ZERO" and "SLOPE" adjustments, so the procedure should be repeated several times.

Do not subject the pH electrode to freezing temperatures.

It is good practice to rinse the electrode in distilled water when going from one buffer to another. When not in use the cup should be filled with standard conductivity solution and capped. Under no circumstances should the meter be stored with distilled water in the cup.

Organic Vapor Analyzer

Procedures for regular maintenance, calibration, and pump system check for the OVA-128 instrument are as follows:

- o Maintenance
  - Check particle filters daily.
  - Check quad rings weekly.
  - Clean burner chamber weekly.
  - Check calibration weekly.
  - Check pumping system daily.

- o Calibration
  - Remove instrument from case.
  - Turn on electronics and zero instrument on X10 scale. Gas select dial to 300.

[Bold items enclosed in brackets denote changes from original text]

- Turn on pump and hydrogen. Ignite flame. Go to survey mode.
- Introduce a methane standard near 100 ppm.
- Adjust R-32 trimpot on circuit board to make meter read to standard.
- Turn off hydrogen flame and adjust meter needle to read 4 ppm.
- Switch to X1 scale and adjust R-31 trimpot to make meter read 4 ppm.
- Return to X10 scale and adjust meter needle to 40 ppm.
- Switch to X100 scale and adjust R-33 trimpot to make meter read 40 ppm.

o **Pump System Check**

- With pump on, hold unit upright and observe flow gauge.
- Ball level significantly below a reading of 2 is low flow.
- Clean or replace particle filters.
- Re-assemble and retest flow.
- If flow still low, replace pump diaphragm and valves.
- If flow normal, plug air intake. Pump should slow and stop.
- If no noticeable change in pump, tighten fittings and retest.
- If still no change, replace pump diaphragm and valves.

Dissolved Oxygen Meter

The dissolved oxygen meter is intended for dissolved oxygen (DO) and temperature measurement in water and wastewater applications, but is also suitable for use in certain other liquids. DO is indicated in mg/L on a 0 to 15 mg/L scale. Temperature is indicated in °C on a -5° to +45° C scale. The DO range is automatically temperature compensated for permeability of the probe membrane, and manually by direct dial for changes in water temperature.

[Bold items enclosed in brackets denote changes from original text]

. Calibration of the DO meter consists of the following:

- o Switch the instrument to OFF and adjust the meter mechanical zero.
- o Switch to ZERO and adjust to "0" on mg/L scale.
- o Switch to PULL *SCALE* and adjust to "15" on mg/L scale.
- o Prepare probe for operation, plug into instrument, wait up to 15 minutes for probe to stabilize; probe can be located in calibration chamber or ambient air.
- o Switch to CALIB. O_2 and adjust CALIB. control until meter indicates local altitude on short scale in upper right-hand corner of meter.

It is desirable to calibrate the probe in a high-humidity environment. See manufacturer's instruction manual for more detail on calibration and other instrument and probe characteristics.

Heasureeent of DO consists of the following:

- o Place the probe in the sample and stir.
- o Allow sufficient time for the probe to stabilize to sample temperature and DO.
- o Switch to READ TEMP *AND* SET DIAL. Set O_2 SOLUBILITY FACTOR dial to sample temperature. Take care to properly index salinity on sloped white bar.
- o Switch to READ O_2 and read mg/L, DO, while stirring.
- o Leave the instrument on between measurements to avoid the necessity of repolarizing the probe.

Eh Measurement

The field measurement of Eh, the oxidation reduction potential, is based on the method given in ASTX D1498-76, Standard Practice for Oxidation-Reduction Potential of Water (reapproved 1981). This method requires the use of a standard pH meter capable of reading in millivolts, a platinum combination electrode, a thermometer to record water sample temperature, and a ferrous-ferric reference solution to be used as the redox standard solution.

[Sold items enclosed in brackets denote changes from original text]

Calibration of the platinum combination electrode, which must be done before an Eh measurement is taken, consists of the following:

- Wash the platinum combination electrode and the sample container with three changes of deionized water or with a flowing stream from a wash bottle.
- Fill the sample container with fresh redox standard solution and immerse the electrode. Gently stir throughout the measurement period.
- Hake sure the meter is on the millivolt range and adjust the millivolt potential of the meter to that of the standard redox solution, 475 mV.
- Without changing the setting'of the potential knob on the meter, repeat the above procedure until two successive readings are constant. The readings should not differ from the value of the standard redox solution by more than 10 mV.

Sample measurement of Eh consists of the following:

- After calibration, wash the electrode with deionized water or a flowing stream from a wash bottle.
- If possible, insert the electrode into the sampling device. If this is not possible, the sample should be placed in a clean glass beaker or sample cup. Avoid excessive agitation of the sample.
- Insert the electrode and gently stir throughout the measurement period.
- Read the millivolt potential of the solution directly from the meter scale.
- Measure successive samples until readings on two successive samples differ by no more than 10 mV. Record the value to the nearest 10 mV as E_{obs}, the measured value for oxidation-reduction potential.

Calculation of Eh, the oxidation-reduction potential of the sample in millivolts, relative to the standard hydrogen electrode (SHE), is accomplished using the following formula:

[Bold items enclosed in brackets denote changes from original text]

$$Eh = E_{obs} + E_{ref}$$

Where: Eh = Oxidation-reduction potential to the SHE;

E_{obs} = Observed oxidation-reduction potential (the measured value); and

E_{ref} = Oxidation-reduction potential of the reference electrode relative to the SEE (200 mV for the combination electrode).

8.2 LABORATORY INSTRUMENTATION

Laboratory capabilities will be initially demonstrated for instrument and reagent/standards performance as well as accuracy and precision of analytical methodology. Brief descriptions of calibration procedures for major instrument types follow.

Gas Chromatography/Mass Spectrometry

All GC/MS instruments have been calibrated at five different concentration levels for analytes of interest, using the procedures outlined in the USEPA CLP procedures and standards traceable to EPA reference materials. Compounds selected as System Performance Check Compounds (SPCCs) must show a minimum mean response factor (specified) for the initial calibration to be considered valid. Compounds selected as Calibration Check Compounds (CCCs) must show a Relative Standard Deviation (RSD) for response factors less than a specified amount for the calibration to be considered valid. This calibration can be utilized as long as it can be demonstrated to remain valid.

On a daily basis, the instrument is hardware-tuned using either bromofluorobenzene (BFB) for volatile analytes, or decafluorotriphenylphosphine (DFTPP) for semi-volatile analytes. Mass spectral peaks must conform both in mass numbers and relative intensity to USEPA's requirements before analysis can proceed.

Following a successful tune, the initial five-point calibration is verified by a single mid-range standard. SPCCs and CCCs are used to

[Bold items enclosed in brackets denote changes from original text]

check response factors for adequacy and consistency against required limits before analytes can proceed.

A successful calibration verification is followed by a method blank analysis. All target analytes (with the exception of common laboratory solvents) must be below target detection limit before analysis can proceed.

Gas Chromatography

Each GC system used for pesticide/PCB analysis by USEPA CLP procedures has been initially calibrated using the external standard technique for all packed columns used for quantitation as outlined in the SOW. Initial calibration standards are prepared at three concentration levels for each parameter of interest-- one of the external standards at a concentration near, but above, the method detection limit and the other concentrations correspond to the expected range of concentrations or define the working range of the detector. This is done on each quantitation column and each instrument at the beginning of the contract period and each time a new column is installed. The results are used to establish retention time windows.

At the beginning of each 72-hour period, three evaluation standards are run sequentially to check the linearity of the initial calibration curve. The evaluation standards contain aldrin, eldrin, 4,4'-DDT, and dibutylchlorendate at three concentration levels as described above. The calibration factors calculated for each compound at the three levels must have a percent relative standard deviation of less than 10%. Evaluation checks are also performed for 4,4' DDT/endrin breakdown and retention time shift for dibutylchlorendate as specified in USEPA CLP procedures. Two individual standard mixes and all multi-response pesticides/PCBs are analyzed after the three evaluation standards to establish calibration factors and absolute retention time (RT). The calibration factors and retention times are verified after every five samples analyzed and at the end of the analytical sequence. Each pesticide/PCB must be within its retention time window or corrective action is taken by the laboratory. The calibration factor must agree with the factor determined at the beginning of the run within ±15% for quantitation and ±20% for confirmation of analysis.

[Bold items enclosed in brackets denote changes from original text]

For SW-846 3rd edition analyses, each GC system has been calibrated using the external standard technique, with initial calibration standards prepared at five concentration levels to define the entire working range of the detector. The relative standard deviation of the calibration factor for the analytes of interest should be <20% to assume linearity through origin. The average calibration factor of the curve is verified each working day by a mid-level standard. The response for all analytes of interest should be within 15% of the average calibration factor. The calibration is checked after ten samples have been analyzed and the response should be within 15%.

Plasma Emission Spectrophotometry

The ICP is calibrated daily using one standard and a blank. The standard is within the demonstrated linear range of the instrument. The linear range is verified quarterly.

The calibration is validated initially using an independent reference standard and a standard at two times the Contract Required Detection Limit (DRDL). The calibration is checked every 10 samples or two hours (whichever is greater). The instrument is recalibrated if drift is indicated (if recovery is not 90-110%).

Atomic Absorption Spectrophotometry

AAS units are calibrated daily using three standards and a blank. The calibration is validated initially using an independent reference standard. The calibration is checked every 10 samples or two hours (whichever is greater). If drift is indicated (recovery is not 9--110% for all elements except mercury [80-120%]), the instrument is re-calibrated.

Documentation

All calibration information is recorded on appropriate forms developed for CLP or SW-846 procedures. Any out-of-control analyses are described on a QA/QC discrepancy form and submitted to the supervisor for corrective action. The calibration information is filed with the raw data in the reports area. All standards are NBS or EPA traceable with initial and continuing calibration standards obtained from the same

[Bold items enclosed in brackets denote *changes* from original text]

source. The calibration is checked with independent standards spiked into the sample or reagent water, or run directly on the instrument.

9. ANALYTICAL PROCEDURES

Analytical methods to be utilized for the sampling tasks are referenced in USEPA documents: CLP - Organic Analysis, Statement of Work (SOU), and Inorganic Analysis, SOU. These documents are revised from time to time. Additional USEPA references include: Methods for Organic Chemical Analysis of Municipal and Industrial Wastewater, 40 CFR Appendix A to Part 136, July 1987; Test Methods for Evaluating Solid Waste (Physical/Chemical Methods), SW-846, Third Edition, September 1986; and Methods for Chemical Analysis of Water and Wastes, EPA-600/4-79-020, Revised March 1983.

The tables presented herein provide detection limits and quality control criteria for the CLP and SW-846 analytical programs. However, instances may arise where high sample concentrations, non-homogeneity of samples, or matrix interferences preclude achieving the detection limits or associated quality control criteria. In such instances, E & E will report the reason for deviations from these detection limits or noncompliance with quality control criteria in the monthly progress report.

9.1 SCREENING ANALYTICAL PROCEDURES

The primary objective of the Phase I field investigations for the project sites will be to effectively and efficiently focus the site characterization and subsequent extent delineation tasks. The field screening task will employ a variety of field investigation techniques (discussed in Section 6.) on a site-by-site basis, including the collection of samples for laboratory analyses. The analyses of samples collected will involve certain analytical requirements which are tailored toward meeting the "focus" objective.

[Bold items enclosed in brackets denote changes from original text]

A screening investigation is deemed necessary at NASP due to the following considerations:

- o There are a large number of sites on the Station requiring characterization.
- o Many of the sites are large in acreage and/or have potentially extensive affected areas.
- o For many of the sites there exists the potential for a broad array of contaminant types to be present.

Considering the above points, early phases of site investigation have a strong potential to be expensive (due to the sheer volume of samples and broad analytical requirements) and to become inordinantly time consuming. The implementation of an analytical screening program for samples collected in Phase I will significantly lessen analytical costs and enable rapid turn-around times for Phase I data. In affect, analytical screening will:

- o Minimize analytical costs;
- o Provide more timely turn-around of sample data;
- o Enable the use of analytical cost savings to enhance the number of sample locations during Phase I; and
- o Expedite the process of determining horizontal and vertical contaminant extent, as well as focusing of analytical parameters in Phases III and IV.

Screening will not be used to eliminate areas from further investigation, rather it will allow focusing subsequent investigation efforts on the primary areas of concern.

The analytical screening parameters and detection limits are shown in Tables 9-1 through 9-4. For individual Phase I site investigations, parameter groups will be selected to function as indicator contaminants.

Method 601/602 Screen for Select Compounds.

Compound identification will not be confirmed on a second column, no gases will be analyzed, and coeluting compounds will not be distinguished.

(Bold items enclosed in brackets denote *changes* from original text]

Table 9-1

ANALYTICAL SCREENING FOR SELECTED VOLATILE ORGANIC COMPOUNDS

Compounds	Detection Limits Waters ug/L	Detection Limits Soils ug/kg
1,1-Dichloroethene	10	1,000
Methylene Chloride	10	1,000
trans-1,2-Dichloroethene	10	1,000
1,1-Dichloroethane	10	1,000
1,1,1-Trichloroethane	10	1,000
Benzene	10	1,000
1,2-Dichloroethane	10	1,000
Trichloroethene	10	1,000
Toluene	10	1,000
Tetrachloroethene	10	1,000
Ethyl benzene	10	1,000
Xylenes	10	1,000
Dichloro benzenes	10	1,000

Detection limits approximate

Table 9-2

ANALYTICAL SCREENING FOR GROUPS OF SELECTED EXTRACTABLE ORGANIC COMPOUNDS

Group of Compounds	Detection Limits Waters ug/L	Detection Limits Soils ug/kg
PAH (total calculated as benzo-a-pyrene)	100	1,000
Phenols: trichloro, tetrachloro, pentachloro (total calculated as pentachlorophenol)	100	1,000
Organophosphorus Pesticides: Malathion, Parathion, Diazinon, Demeton	100	1,000
Chlorinated Herbicides: 2,4-D, 2,4,5-TP (Silvex), 2,4,5-T	100	1,000
Carbamates	100	1,000

Detection limits approximate

0001372

Table 9-3

ANALYTICAL SCREENING FOR SELECTED PESTICIDES AND TOTAL PCBs

Compounds	Dectection Limits Waters ug/L	Soils ug/kg
Hoptachlor	5	1,000
Lindane	5	1,000
Aldrin	5	1,000
4,4'-DDT	5	1,000
Dieldrin	5	1,000
Endrin	5	1,000
4,4'-DDE	5	1,000
Chlordan.	5	1,000
Total PCBs	10	1,000

Detection limits approximate

Table 9-4

ANALYTICAL SCREENING FOR SELECTED METALS

Compound	Detection Limits Waters µg/L	Soil. [mg/kg]
Arsenic	60	6
Cadmium	5	0.5
Chromium	10	1.0
Copper	25	2.5
Lead	40	4.0
Nickel	40	4.0
Silver	10	1.0
Zinc	20	2.0

Detection limits approximate

0003373

HPLC Screen of Select Extractable Compounds.

Analytical runs are shortened, resulting in Specific compounds possibly not being distinguished. Quantitation is based on the response of a single compound. QC and calibration is limited.

Pesticide/Total PCB Screen.

Detection limits are high and based on total PCBs. No surrogate compounds are added. QC and calibration are limited.

ICP Screen for Select **Metals.**

Documentation of calibration, QC and matrix effects is limited.

9.2 ANALYTICAL PROCEDURES AND QA OBJECTIVES

Table 9-5 lists all analyses expected to be performed by E & E's ASC for this project. For each analysis, the list includes:

- Parameter name;
- Reference and method number;
- A brief description of the method;
- The matrix (S/W) applicable to that method;
- The detection limit;
- The target spike recovery as a percentage;
- The target known recovery as a percentage; and
- The target RPD for duplicate or replicate analyses.

Both USEPA CLP and non-CLP methods are referenced since some parameters not included in CLP protocols may be required under this project. Multicomponent analyses (e.g., pesticides/PCBs) are listed in the table but referenced to later tables in this section for QC data.

Tables 9-6 through 9-13 list detection limits and QC criteria for organic parameters using USEPA CLP analytical procedures and SW-846 methods. Tables 9-14 and 9-15 present matrix spike and contract required surrogate spike recovery limits. Table 9-16 lists the methods

[Bold items enclosed in brackets denote changes from original text]

Table 9-5

QA OBJECTIVE SUMMARY

Method Reference	Method Number	Brief Description of Method	Matrix (S/W)	Detection Limit	% Spike Recovery	% Known Recovery	RPD Duplicates
Acidity							
EPI	305.2	Titrimetic	W	1 mg/L a $CaCO_3$	NA	95-105	10
Alkalinity							
EPI	310.1	Titrimetic pH 4.5	W	1 mg/L a $CaCO_3$	80-120	85-115	10
Anion Determination							
EPI	300	Anion Exchange Separation	W	0.5 mg/L	90-110	90-110	10
Ash							
ASTM	D-482	Ignite, Muffle Furnace at 775°C	S	1%	—	—	15
BOD							
SM	507	Oxygen Consumption	W	2 mg/L	—	82-118	—
BTU							
ASTM	D-2015-77	Heat of Combustion by Bomb Calorirtor	S	10 BTU/lb	—	85-115	20
Chloride							
EPI	325.3	Titrimetric, Murcuric Nitrate	W	1 mg/L	85-115	90-110	10
Chlorine-Residual							
EPI	330.4	Titriwtric, DPD-FAS	W	0.1 mg/L	—	—	15
Chlorine-Percent	(Total Halogens)						
ASTM	D-808-81	Bomb Calorimeter Digestion	S	.025%	—	85-115	20
EPI	325.3	Titrimetric Analysis					
COD							
EPI	410.4	Colorimetric-Low Concontration	W	5 mg/L	90-110	90-110	50
EPI	410.4	Colorimetric-High Concontration	W	50 mg/L	90-110	90-110	15

0001374

Table 9-5 (Cont.)

Method Reference	Method Number	Brief Description of Method	Matrix (S/W)	Detection Limit	% Spike Recovery	% Known Recovery	RPD Duplicates
Color							
EP1	110.2	Platinum-cobalt comparison	W	5 PCU	NA	NA	10
Conductance							
EP1	120.1	Measured with Self-contained Conductivy Meter	W	1 umho/cm	NA	96-104	10
Cyanide-Amenable							
EP1	33S.1	Spectrophotonetric	W	0.01 mg/L	75-125	85-115	20
Cyanide-Total							
EP1	33S.2	Spectrophotonetric	W	0.01 mg/L	75-125	85-115	20
SW	9010	Colorimetric	S	1.0 mg/kg	75-125	85-115	20
Flashpoint							
SW	1010	Pensky-Martens Closed Cup	Solid/ Liquid	--	--	--	20
Fluoride							
EP1	340.2	Potentiometric, Ion Selective Electrode	W	0.1 mg/L	90-110	90-110	10
Grain Size							
ASTM	D422-63	sieve Analysis	S	--	--	--	--
Hardness							
EP1	130.2	Titrimetric, EDTA	W	1mg/L as $CaCo_3$	NA	85-115	lo
Hydrocarbons							
SM	503 E	Gravimetric	W	1mg/L	--	85-115	20
Moisture Content							
ASTM	D2216-80	Oven dried	S	1%	--	--	20
Nitrogen-Ammonia							
EP1	350.3	potentiometric, Ion Selective Electrode	W	0.03 mg/l	85-115	85-115	10
EP1	3S0.2	Distillation/ titration	W	0.02 mg/L	90-110	90-110	10
			S	1.0 mg/kg	90-110	90-110	10
Nitrogen-Kjeldahl							
EP1	351.3	Distillation/ titration	W	0.02 mg/L	80-120	80-120	20
			S	1 mg/kg	80-120	80-120	20

Table 9-5 (Cont.)

Method Reference	Method Number	Brief Description of Method	Matrix (S/W)	Detection Limit	% Spike Recovery	% Known Recovery	RPD Duplicates
Nitrogen-Nitrate							
EPl	352.1	Colorimetric/brucine	W	0.1 mg/L	70-130	70-130	50
Nitrogen-Nitrito							
EPl	354.1	Spectrophotometric	W	0.01 mg/L	80-120	•	15
Odor							
EPl	140.1	Threshold odor (Consistent Series)	W	1.T.O.N.	NA	NA	10
Oil rod Grease							
EPl	413.2	Total Recoverable Spectrophotometric Infrarod	W	1 mg/L	75-125	85-115	20
SW	3550	Sonication:	S	10 mg/kg	75-125	85-115	20
EPl	413.2	Spectrophotometric Infrarod					
EPl	413.1	Gravimetric, Separatory Funnel Extraction	W	1 mg/L		80-120	20
Oxygen-Dissolved							
EPl	360.1	Membrane Electrode	W	1 mg/L	—	—	15
EPl	360.2	Winkler Titration	W	0.5 mg/L	—	—	15
pH							
EPl	150.1	Electrometric	W	±0.1 su	—	—	5
Petroleum Hydrocarbons							
EPl	418.1	Total Recoverable Spectrophotometric Infrarod	W	1 mg/L	—	85-115	20
EPl	418.1	Total Recoverable Spectrophotometric Infrarod	S	10 mg/kg	—	85-115	20
NYDOH	310-13	Petroleum Product Idontifieation	S/W	NA	—	—	—
Phenol							
EPl	420.1	Spoctrophotowtric, Manual 4-AAP with Distillation	W S	0.005 mg/L 0.3 mg/kg	80-120 80-120	80-120 80-120	25 25

Table 9-5 (Cont.)

Method Reference	Method Number	Brief Description of Method	Matrix (S/W)	Detection Limit	% Spike Recovery	% Known Recovery	RPD Duplicates
Phosphate							
EPI	365.2	Colorimetric, Ascorbic Acid,	W	0.05 mg/L	80-120	90-110	10
		Single Reagent	S	5 mg/kg	--	90-110	10
Residue-TDS							
EPI	160.1	Filterable Gravimetric Dried 180°C	W	10 mg/L	NA	80-120	20
Residue-TSS							
EPI	160.2	Nonfilterable Gravimetric Dried 103-105°C	W	1 mg/L	NA	85-115	20
Residue-Total							
EPI	160.3	Total Residue, Gravimetric Dried 103-105°C	W	10 mg/L	--	--	20
Residue-Volatile							
EPI	160.4	Volatile Gravimetric Ignition at 550°C	W	1 mg/L	NA	80-120	20
Residue-Settleable							
EPI	160-5	Imhoff Cone-Volumetric Determination	W	0.1 mL/L hr	NA	NA	--
Sulfate							
EPI	375.4	Turbidimetric	W	2 mg/L	90-110	90-110	10
Sulfito							
EPI	377.1	Titrimetric	W	0.5 mg/L	--	80-120	10
Sulfur-Percent							
ASTM	D129-64	Bomb Calorimeter	S	.025%	--	85-115	20
Sulfide							
EPI	376.1	Iodometric	W	1.0 mg/L	--	--	10
			S	4 mg/kg	--	--	10
Surfactants, Anionic							
SM	523 B	Spectrophotometric	W	.025 mg/L as MPSAS	80-120	--	20
Temperature							
EPI	170.1	Thermometric	W	--	--	--	--
TOC							
EPI	415.1	Catalytic Coabustion, Infrared Detection	W	1 mg/L	--	80-120	20
TOX							
SW	9020	Carbon Absorption, Microcoulometric titration	W	5 ug/L	80-120	95-105	20

Table 9-5 (Cont.)

Method Reference	Method Number	Brief Description of Method	Matrix (S/W)	Detection Limit	% Spike Recovery	% Known Recovery	RPD Duplicates
Turbidity							
EPI	180.1	Nephelometric Turbidity	W	0.02 NTU	NA	90–110	10
HAZARDOUS WASTE CHARACTERISTICS:							
Ignitability							
SW	1010	Flashpoint-Pensky-Martens Closed Cup	Solid/ Liquid	—	—	—	20
Corrosivity							
SW	9040	pH Electrometric	W	±0.1 su	—	—	5
SW	9045	pH Electrometric water or 0.01 M $CaCl_2$ added	S	±0.1 su	—	—	5
SW	1110	coupon (NACE, TM-01-69)	W	(Work is subcontracted)			
Reactivity							
SW	9010	Cyanide-Colorimetric	W	0.01 mg/L	75-125	85-115	20
SW	9010	Cyanide-Colorimetric	S	1 mg/kg	75–115	85-115	20
SW	9030	Sulfide-Iodometric	W	1 mg/L	—	—	10
SW	9030	Sulfide-Iodometric	S	4 mg/kg	—	—	10
EP Toxicity							
SW	1310	Extraction Procedure	W	NA	NA	NA	NA
SW	1310	Sxtraction Procedure	S	NA	NA	NA	NA
Aluminum							
UP1	200.7	ICP	W	100 ug/L	75-125	80-120	20
SW	6010	ICP	W	100 ug/L	75-125	80-120	20
SW	6010	ICP	S	20 mg/kg	75-125	—	35
Antimony							
EPI	200.7	ICP	W	60 ug/L	75-125	—	20
SW	6010	ICP	W	60 ug/L	75-125	80-120	20
SW	6010	ICP	S	6 mg/kg	75-125	—	20

0001376

Table 9-5 (Cont.)

Method Reference	Method Number	Brief Description of Method	Matrix (S/W)	Detection Limit	% Spike Recovery	% Known Recovery	RPD Duplicates
Arsenic							
EPI	206.2	Furnace AA	W	5 ug/L	75–125	80–120	20
SW	7060	Furnace AA	W	5 ug/L	75–125	80–120	20
SW	7060	Furnace AA	S	0.1 mg/kg	75-125	--	35
SW	6010	ICP	W	200 ug/L	--	--	--
Barium							
EPI	200.7	ICP	W	10 ug/L	75-125	80–120	20
SW	6010	ICP	W	10 ug/L	75–125	80–120	20
SW	6010	ICP	S	1.0 mg/kg	75-125	--	35
Beryllium							
EPI	200.7	ICP	W	2 ug/L	75–125	80-120	20
SW	6010	ICP	W	2 ug/L	75–125	80–120	20
SW	6010	ICP	S	0.5 mg/kg	75-125	--	35
Boron							
EPI	213.3	Curcumin, colorimetric	W	0.1 mg/L	--	--	--
SW	200.7	ICP	W	10 mg/L	75–125	80-120	20
SW	6010	ICP	S	1 mg/kg	75-125	--	35
Cadmium							
EPI	200.7	ICP	W	5 ug/L	75-125	80-120	20
SW	6010	ICP	W	5 ug/L	75–125	80-120	20
SW	6010	ICP	S	0.5 mg/kg	75–125	--	35
Calcium							
EPI	200.7	ICP	W	1000 ug/L	75–125	80–120	20
SW	6010	ICP	W	1000 ug/L	75-125	80-120	20
m	6010	ICP	S	100 mg/kg	75-125	--	35

Table 9-5 (Cont.)

Method Reference	Method Number	Brief Description of Method	Matrix (S/W)	Detection Limit	% Spike Recovery	% Known Recovery	RPD Duplicates
Chromium							
EP1	200.7	ICP	W	10 ug/L	75-125	80-120	20
SW	6010	ICP	W	10 ug/L	75-125	80-120	20
SW	6010	ICP	S	1.0 mg/kg	75-125	--	35
Chromium-Hexavalent							
SW	7195	ICP	W	10 ug/L	75-125	80-120	20
SW	7195	IC?	S	20 mg/kg	75-125	--	80
Cobalt							
UP1	200.7	ICP	W	10 ug/L	75-125	80-120	20
SW	6010	IC?	W	10 ug/L	75-125	80-120	20
SW	6010	ICP	S	1.0 mg/kg	75-125	--	35
copper							
UP1	200.7	ICP	W	10 ug/L	75-125	80-120	20
SW	6010	ICP	W	10 ug/L	75-125	80-120	20
SW	6010	ICP	S	1.0 mg/kg	75-125	--	35
Iron							
EP1	200.7	ICP	W	25 ug/L	75-125	80-120	20
SW	6010	ICP	W	25 ug/L	75-125	80-120	20
SW	6010	ICP	S	2.5 mg/kg	75-125	--	35
Lead							
EP1	239.2	Furnace M	W	5 ug/L	75-125	80-120	20
EP1	200.7	ICP	W	50 ug/L	75-125	80-120	20
SW	7421	Furnace M	W	5 ug/L	75-125	80-120	20
SW	7421	Furnace AA	S	0.5 mg/kg	75-125	--	35
SW	6010	ICP	W	50 ug/L	75-125	80-120	20
SW	6010	ICP	S	5.0 mg/kg	75-125	--	35

0001377

Table 9-5 (Cont.)

Method Reference	Method Number	Brief Description of Method	Matrix (S/W)	Detection Limit	% Spike Recovery	% Known Recovery	RPD Duplicates
Magnesium							
EPl	200.7	ICP	W	1,000 ug/L	75-125	80-120	20
SW	6010	ICP	W	1,000 ug/L	75-125	80-120	20
SW	6010	ICP	S	100 mg/kg	75-125	--	35
Manganese							
EPl	200.7	ICP	W	5 ug/L	75-125	80-120	20
SW	6010	ICP	W	5 ug/L	75-125	80-120	20
SW	6010	ICP	S	0.5 mg/kg	75-125	--	35
Mercury							
EPl	245.1	Manual Cold Vapor	W	0.2 ug/L	75-125	80-120	20
SW	7470	Cold Vapor-Liquid	W	0.2 ug/L	75-125	80-120	20
SW	7471	Cold Vapor-Liquid	S	0.1 mg/kg	75-125	--	35
Molybdenum							
SW	200.7	ICP	W	20 ug/L	75-125	80-120	20
SW	6010	ICP	S	2 mg/kg	75-125	--	35
Nickel							
EPl	200.7	ICP	W	15 ug/L	75-125	80-120	20
SW	6010	ICP	W	15 ug/L	75-125	80-120	20
SW	6010	ICP	S	1.5 mg/kg	75-125	--	35
Potassium							
EPl	200.7	ICP	W	1,000 ug/L	75-125	80-120	20
SW	6010	ICP	W	1,000 ug/L	75-125	80-120	20
SW	6010	ICP	S	100 mg/kg	75-125	--	35

Table 9-5 (Cont.)

Method Reference	Method Number	Brief Description of Method	Matrix (S/W)	Detection Limit	% Spike Recovery	% Known Recovery	RPD Duplicates
Selenium							
EPl	270.a	Furnace AA	W	5 ug/L	75-125	80-120	20
SW	7740	Furnace AA	W	5 ug/L	75-125	80-120	20
SW	7740	Furnace AA	S	0.5 mg/kg	75-125	--	35
SW	6010	ICP	W	200 ug/L	75-125	80-120	20
Silicon							
SW	200.7	ICP	W	100 ug/L	75-125	80-120	20
SW	6010	Iff	S	10 mg/kg	75-125	--	35
Silver							
EPl	200.7	ICP	W	10 ug/L	75-125	--	20
SW	6010	Iff	W	10 ug/L	75-125	80-120	20
SW	6010	ICP	S	1.0 mg/kg	75-125	--	35
Sodium							
SW	6010	ICP	W	1,000 ug/L	75-125	80-120	20
SW	6010	Iff	S	100 mg/kg	75-125	--	35
EPl	200.7	ICP	W	1,000 ug/L	75-125	80-120	20
Thallium							
EPl	279.2	Furnace AA	W	5 ug/L	75-125	80-120	20
SW	7841	Furnace AA	W	5 ug/L	75-125	80-120	20
SW	7841	Furnace AA	S	0.5 mg/kg	75-125	--	35
Tin							
EPl	282.2	Furnace AA	W	40 ug/L	75-125	80-120	20
EPl	282.2	Furnace AA	S	4 mg/kg	75-125	--	35
Titanium							
EPl	283.2	Furnace AA	W	10 ug/L	75-125	80-120	20

Table 9-5 (Cont.).

Method Reference	Method Number	Brief Description of Method	Matrix (S/W)	Detection Limit	% Spike Recovery	% Known Recovery	RPD Duplicates
Vanadium							
EP1	200.7	ICP	W	10 ug/L	75-125	80-120	20
SW	6010	ICP	W	10 ug/L	75-125	80-120	20
SW	6010	ICP	S	1.0 mg/kg	75-125	--	35
Zinc							
EP1	200.7	ICP	W	10 ug/L	75-125	80-120	20
SW	6010	ICP	W	10 ug/L	75-125	80-120	20
SW	6010	ICP	S	1.0 mg/kg	75-125	--	35
9-6							

The following non-CLP and CLP methods contain analytes with differing QC criteria. Analyte specific QC limits are listed in this document in the roferencmd tables (i.e., 9-6 refers to Table 9-6):

Base/Neutral/Acid Extractables							
EP2	625	Extraction, GC/MS	W	9-6/9-8	9-14	9-15	9-14
SW	8270	Extraction, GC/MS	S/W	9-6/9-8	9-14	9-15	9-14
CLP	--	Extraction, GC/MS	S/W	9-7/9-9	9-14	9-15	9-14
Volatile Organic Compounds							
EP2	624	Purge & Trap, GC/MS	W	9-10	9-14	9-15	9-14
SW	8240	Purge L Trap, GC/MS	S/W	9-10	9-14	9-15	9-14
CLP	--	Purge & Trap, GC/MS	S/W	9-11	9-14	9-15	9-14
Pesticides/PCBs							
BP2	608	Extraction, GC/ECD	W	9-12	9-14	9-15	9-14
SW	8080	Extraction, GC/ECD	S/W	9-12	9-14	9-15	9-14
CLP	--	Extraction, GC/ECD	S/W	9-13	9-14	9-15	9-14
Organophosphorus Pesticides							
SW	8140	Extraction, GC/FPD	S	1 mg/kg	75-125	80-120	40

Table 9-5 (Cont.)

Method Reference	Method Number	Brief Description of Method	Matrix (S/W)	Detection Limit	% Spike Recovery	% Known Recovery	RPD Duplicates
Polynuclear Aromatic Hydrocarbons							
EP2	610	Extraction, GC/FID	W	10 ug/L	75-125	80-120	40
SW	8100	Extraction, GC/FID	S	1 mg/kg	75-125	80-120	40
Phenolic Compounds							
SW	8040	Extraction, GC/FID	S	1 mg/kg	75-125	80-120	40
Herbicides							
SM	509B	Extraction, esterification, GC/ECD	W	0.5 ug/L	75-125	80-120	40
SW	8150 (modified)	Extraction, esterification, with BF_3, GC/ECD	W	0.5 ug/L	75-125	80-120	40
SW	8150 (modified)	Extraction, esterification, with BF_3, GC/ECD	S	1 mg/kg	75-125	80-120	40
Volatile Halogenated Hydrocarbons**							
EP1	601	Purge and trap, GC/Hall	W	0.5 ug/L	75-125	80-120	40
SW	8010	Purge and trap. GC/Hall	S	1 mg/kg	75-125	80-120	40
Volatile Aromatic Hydrocarbons**							
EP1	602	Purge and trap. GC/PID	W	0.5 ug/L	75-125	80-120	40
SW	8020	Purge and trap,	S	1 mg/kg	75-125	80-120	40
Ethylene Dibromide							
EP1	601	Modified to include EDB in calibration	W	1 ug/L	75-125	80-120	40

Detection limits are target values and may be affected by matrix.

Completeness objectives for all parameters 95% unless stated otherwise.

**Detection limts and QC criteria are approximate limits representative of the entire class of compounds. Limits and criteria for individual compounds will vary.

Table 9-5 (Cont.)

KEY: Method reference abbreviations as follows:

CLP: EPA "Contract Laboratory Program," Statenont of Work, February 1988.

EP1: EPA "Methods for Chemical Analysis of Water and Wastes," EPA-600/4-79-020, Revised March 1983.

EP2: "Hothods for Chemical Analysis of Municipal and Industrial Wastowator," Appendix A to Part 136 (40 CFR Part 136), July 1967.

SW: EPA "Test Methods for Evaluating Solid Wastes," SW-846, September 1986.

ASTM: "American Society for Testing and Materials," Revised 1984.

SH: "Standard Methods for Examination of Water and Wastowator, 16th Edition, 1985.

Table 9-6

NON-CLP BASE NEUTRALS

Detection Limits Compound	625/8270 Water ug/L	8270 Low Level Soil ug/kg
bis(2-chloroethyl)ether	10	330
1,3-dichlorobenzene	10	330
1,4-dichlorobenzene	10	330
1,2-dichlorobenzene	10	330
bis(2-chloroisopropyl)ether	10	330
N-nitrosodipropylamine	10	330
hexachloroethane	10	330
nitrobenzene	10	330
isophorone	10	330
bis(2-chloroethoxy)methane	10	330
1,2,4-trichlorobenzene	10	330
naphthalene	10	330
hexachlorobutadiene	10	330,
hexachlorocyclopentadiene	10	330
2-chloronaphthalene	10	330
dimethyl phthalato	10	330
acenaphthylene	10	330
fluorene	10	330
acenaphthene	10	330
2.4-dinitrotoluono	10	330
2,6-dinitrotoluene	10	330
diethylphthalate	10	330
4-chlorophonyl phenyl ether	10	330
N-nitrosodiphenylamine	10	330
4-bromophenyl phenyl ether	10	330
hexachlorobenzene	10	330
phenanthrene	10	330
anthracene	10	330
di-n-butyl phthalato	10	330
fluoranthene	10	330
benzidine	50	1,600
pyrene	10	330
butyl benzyl phthalato	10	330
3,3'-dichlorobenzidine	20	660
benzo(a)anthracene	10	330
bis(2-ethylhexyl)phthalate	10	330
chrysene	10	330
di-n-octyl phthalato	10	330
benzo(b)fluoranthene	10	330
benzo(k)fluoranthene	10	330
benzo(a)pyrene	10	330
indeno(1,2,3-cd)pyrene	10	330
dibenzo(a,h)anthracene	10	330
benzo(ghi)perylene	10	330

Note: See CLP Base Neutral listing for QC criteria.

0001380

Table 9-7

CLP BASE NEUTRALS

Compound	Detection Limits Low/ ug/L	Detection Limits Low Soil/ Sediment ug/kg	QC Criteria - Matrix Spike* Water Duplicate RPD	Water % Spike Recovery	Soil Duplicate RPD	Soil % Spike Recovery
bis(2-Chloroethyl) ether	10	330	--	--	--	--
1,3-Dichlorobenzene	10	330	--	--	--	--
1,4-Dichlorobenzene	10	330	28	36-97	27	28-104
Benzyl Alcohol	10	330	--	--	--	--
1,2-Dichlorobenzene	10	330	--	--	--	--
bis(2-Chloroisopropyl)ether	10	330	--	--	--	--
N-Nitroso-Dipropylamine	10	330	38	41-116	38	41-126
Hexachloroethane	10	330	--	--	--	--
Nitrobenzene	10	330	--	--	--	--
Isophorone	10	330	--	--	--	--
Benzoic Acid	50	1,600	--	--	--	--
bis(2-Chloroethoxy)methane	10	330	--	--	--	--
1,2,4-Trichlorobenzene	10	330	28	39-98	23	38-107
Naphthalene	10	330	--	--	--	--
4-Chloroaniline	10	330	--	--	--	--
Hexachlorobutadiene	10	330	--	--	--	--
2-Methylnaphthalene	10	330	--	--	--	--
Hexachlorocyclopentadiene	10	330	--	--	--	--
2-Chloronaphthalene	10	330	--	--	--	--
2-Nitroaniline	50	1,600	--	--	--	--
Dimethyl Phthalate	10	330	--	--	--	--
Acenaphthylene	10	330	--	--	--	--
3-Nitroaniline	50	1,600	--	--	--	--
Acenaphthene	10	330	31	46-118	19	31-137
Dibenzofuran	10	330	--	--	--	--
2,4-Dinitrotoluene	10	330	38	24-96	47	28-89
2,6-Dinitrotoluene	10	330	--	--	--	--
Diethylphthalate	10	330	--	--	--	--
4-Chlorophenyl Phenyl ether	10	330	--	--	--	--
Fluorene	10	330	--	--	--	--
4-Nitroaniline	50	1,600	--	--	--	--
N-nitrosodiphenylamine	10	330	--	--	--	--
4-Bromophenyl Phenyl ether	10	330	--	--	--	--
Hexachlorobenzene	10	330	--	--	--	--
Phenanthrene	10	330	--	--	--	--
Anthracene	10	330	--	--	--	--
Di-n-butylphthalate	10	330	--	--	--	--
Fluoranthene	10	330	--	--	--	--

Table 9-7 (cart.)

Compound	Detection Limits Low/ Water ug/L	Low Soil/ Sediment ug/kg	QC Criteria - Matrix Spike* Water Duplicate RPD	Water % Spike Recovery	Soil Duplicate RPD	Soil % Spike Recovery
Pyrene	10	330	31	26-127	36	35-142
Butyl Benzyl Phthalate	10	330		—	—	—
3,3'-Dichlorobenzidine	20	660	—	—	—	—
Benzo(a)anthracene	10	330	—	—	—	—
bis(2-ethylhexyl)phthalate	10	330		—	—	—
Chrysene	10	330	—	—	—	—
Di-n-octyl Phthalate	10	330	—	—	—	—
Benzo(b)fluoranthene	10	330		—	—	—
Benzo(k)fluoranthene	10	330		—	—	—
Benzo(a)pyrene	10	330	—	—	—	—
Indeno(1,2,3-cd)pyrene	10	330		—	—	—
Dibenzo(a,h)anthracene	10	330	—	—	—	—
Benzo(g,h,i)perylene	10	330	—	—	—	—

*Selected Compounds

Medium Water Contract Required Detection Limits (CRDL) for Semi-Volatile Compounds are 100 times tho individual Low Water CRDL.

Medium Soil/Sediment Contract Required Detection Limits (CRDL) for Semi-HSL Compounds are 60 times tho individual Low Soil/Sediment CRDL.

Table 9-8

NON-CLP ACID PHENOLS

Compound	Detection Limits 625/8270 Water ug/L	8270 Low Level Soils ug/kg
phenol	10	330
2-chlorophenol	10	330
2-nitrophonol	10	330
2,4-dimethylphenol	10	330
2.4-dichlorophonol	10	330
4-chloro-3-mothylphonol	10	330
2,4,6-trichlorophenol	10	330
2,4-dinitrophenol	50	1,600
4-nitrophonol	50	1,600
4,6-dinitro-2-methylphenol	50	1,600
pentachlorophenol	50	1,600

Note: See CLP Acid Phenol listing Cor QC criteria

Table 9-9

CLP ACID PHENOLS

Compound	Detection Limits Low Water ug/L	Low Soil/ Sediment ug/kg	QC Criteria - Matrix Spike* Water Duplicate RPD	Water % Spike Recovery	Soil Duplicate RPD	Soil % Spike Recovery
Phenol	10	330	42	12-89	35	26-90
2-Chlorophenol	10	330	40	27-123	50	25-102
2-Methylphenol	10	330	—	—	—	—
4-Methylphenol	10	330	—		—	—
2-Nitrophenol	10	330	—	—	—	—
2,4-Dimethylphenol	10	330	—	—	—	—
2,4-Dichlorophenol	10	330	—	—	—	—
4-Chloro-3-methylphenol (para-chloro-meta-cresol)	10	330	42	23-97	33	26-103
2,4,6-Trichlorophenol	10	330	—	—	—	—
2,4,5-Trichlorophenol	50	1,600	—	—	—	—
2,4-Dinitrophenol	50	1,600	—	—	—	—
4,6-Dinitro-2-methylphenol	50	1,600	—	—	—	—
4-Nitrophenol	50	1,600	50	10-00	50	11-114
Pentachlorophenol	50	1,600	50	9-103	47	17-109

*Selected Compound.

0001382

Table 9-10

NON-CLP VOLATILE ORGANICS

Compound	624/8240 ug/L	Detection Limits 8240 Methanol Extraction soils ug/kg	0240 Heated Purge and Trap - Soils ug/kg
chloromethane	10	2,000	10
bromomethane	10	2,000	10
vinyl chloride	10	2,000	10
chloroethane	10	2,000	10
methylene chloride	5	1,000	5
1,1-dichloroethene	5	1,000	5
1,1-dichloroethane	5	1,000	5
trans-1,2-dichloroethene	5	1,000	5
chloroform	5	1,000	5
1,2-dichloroethane	5	1,000	5
1,1,1-trichloroethane	5	1,000	5
carbon tetrachloride	5	1,000	5
bromodichloromethane	5	1,000	5
1,2-dichloropropane	5	1,000	5
trans-1,3-dichloropropene	5	1,000	5
trichloroethene	5	1,000	5
chlorodibromomethane	5	1,000	5
1,1,2-trichloroethane	5	1,000	5
benzene	5	1,000	5
cis-1,3-dichloropropene	5	1,000	5
2-chloroethylvinyl ether	10	2,000	10
bromoform	5	1,000	5
tetrachloroethene	5	1,000	5
1,1,2,2-tetrachloroethane	5	1,000	5
toluene	5	1,000	5
chlorobenzene	5	1,000	5
ethylbenzene	5	1,000	5

Note: See CLP Volatile Organics Listing for QC Criteria

Table 9-11

CLP VOLATILE ORGANICS

Compound	Detection Limits Low Water[a] ug/L	Detection Limits Low Soil/ Sediment[b] ug/kg	QC Criteria – Matrix Spike* Water Duplicate RPD	Water % Spike Recovery	Soil Duplicate RPD	Soil % Spike Recovery
Chloromethane	10	10	—	—	—	—
Bromomethane	10	10	—	—	—	—
Vinyl Chloride	10	10	—	—	—	—
Chloroethane	10	10	—	—	—	—
Methylene Chloride	5	5	—	—	—	—
Acetone	10	10	—	—	—	—
Carbon Disulfide	5	S	—	—	—	—
1,1-Dichloroethene	5	5	14	61-145	22	59-172
1,1-Dichloroethane	5	S	—	—	—	—
1,2-Dichloroethene (total)	5	5	—	—	—	—
Qlorof orm	5	5	—	—	—	—
1,2-Dichloroethane	5	5	—	—	—	—
2-Butanone	10	10	—	—	—	—
1,1,1-Trichloroethane	5	5	—	—	—	—
Carbon Tetrachloride	5	5	—	—	—	—
Vinyl Acetate	10	10	—	—	—	—
Bromodichloromenthane	5	5	—	—	—	—
1,1,2,2-Tetrachloroethane	5	5	—	—	—	—
1,2-Dichloropropane	5	5	—	—	—	—
trans-1,3-Dichloropropene	5	5	—	—	—	—
Trichloroethene	5	5	14	71-120	24	62-137
Dibromochloromethane	5	5	—	—	—	—
1,1,2-Trichloroethane	5	5	—	—	—	—
Benzene	5	5	11	76-127	21	66-142
cis-1,3-Dichloropropene	5	5	—	—	—	—
Bromoform	5	5	—	—	—	—
2-Hexanone	10	10	—	—	—	—
4-Methyl-2-pentanone	10	10	—	—	—	—
Tetrachloroethene	5	5	—	—	—	—
Toluene	5	5	13	76-125	21	59-139
Chlorobenzene	5	5	13	75-130	21	60-133
Ethyl Benzene	5	5	—	—	—	—
Styrene	5	5	—	—	—	—
Total Xylenes	5	5	—	—	—	—

*Selected Compounds

[a]Medium Water Contract Required Detection Limits (CRDL) for Volatile HSL Compounds are 100 times tho individual Low Water CRDL.

[b]Medium Soil/Sediment Contract Required Detection Limits (CRDL) for Volatile HSL Compounds are 100 times tho individual Low Soil/Sediment CRDL.

0001383

Table 9-12

PRIORITY POLLUTANT PESTICIDES AND PCBs

Compound	Detection Limits 608/8080 Water ug/L	8080 Soil mg/kg
Aldrin	0.025	0.001
a-BHC	0.025	0.001
b-BHC	0.025	0.001
g-BHC	0.025	0.001
d-BHC	0.025	0.001
Chlordane	0.20	0.008
4,4'-DDD	0.05	0.002
4,4'-DDE	0.05	0.002
4,4'-DDT	0.10	0.005
Dieldrin	0.05	0.002
Endosulfan I	0.05	0.002
Endosulfan II	0.05	0.002
Endosulfan sulfate	0.10	0.005
Endrin	0.05	0.002
Endrin aldehyde	0.10	0.005
Hoptachlor	0.025	0.002
Hoptachlor epoxide	0.05	0.001
Methoxychlor	0.04	0.016
PCB - 1016	0.50	0.002
PCB - 1221	0.50	0.002
PCB - 1232	0.50	0.002
PCB - 1242	0.50	0.002
PCB - 1240	0.50	0.002
PCB - 1254	0.50	0.002
PCB - 1260	0.50	0.002
Toxaphene	1.0	0.050

Table 9-13

CLP PESTICIDES/PCBs

Compound	Detection Limits** Low Water ug/L	Low Soil/ Sediment ug/kg	QC Criteria - Matrix Spike* Water Duplicate RPD	Water % Spike Recovery	soil Duplicate RPD	soil % Spike Recovery
alpha-BHC	0.05	8.0	—	—	—	—
beta-BHC	0.05	8.0	—	—	—	—
delta-BHC	0.05	8.0	—	—	—	—
gamma-BHC (Lindane)	0.05	6.0	15	56-123	50	46-121
Heptachlor	0.05	8.0	20	40-131	31	35-130
Aldrin	0.05	8.0	22	40-120	43	34-132
Heptachlor Epoxide	0.05	6.0	—	—	—	—
Endosulfan I	0.05	8.0	—	—	—	—
Dieldrin	0.10	16.0	18	52-126	38	31-134
4,4'-DDE	0.10	16.0	—	—	—	—
Endrin	0.10	16.0	21	56-121	45	42-139
Endosulfan II	0.10	16.0	—	—	—	—
4,4'-DDD	0.10	16.0	—	—	—	—
Endrin Aldehyde	0.10	16.0	—	—	—	—
Endosulfan Sulfate	0.10	16.0	—	—	—	—
4,4'-DDT	0.10	16.0	27	30-127	50	23-134
Endrin Ketone	0.10	16.0	—	—	—	—
Methoxychlor	0.5	80.0	—	—	—	—
alpha Chlordane	0.5	60.0	—	—	—	—
gamma Chlordane	0.5	80.0	—	—	—	—
Toxaphene	1.0	160.0	—	—	—	—
AROCLOR-1016	0.5	80.0	—	—	—	—
AROCLOR-1221	0.5	60.0	—	—	—	—
AROCLOR-1232	0.5	80.0	—	—	—	—
AROCLOR-1242	0.5	80.0	—	—	—	—
AROCLOR-1248	0.5	80.0	—	—	—	—
AROCLOR-1254	1.0	160.0	—	—	—	—
AROCLOR-1260	1.0	160.0	—	—	—	—

*These limits are for selected compounds and are advisory only.

**Specific detection limits are highly matrix-dependent. The detection limits listed herein are provided for guidance and may not always be achievable.

Medium water Contract Required Detection Limits (CRDL) for pesticide HSL compounds are 100 times the individual low water CRDL.

Medium soil/sediment Contract Required Detection Limits (CRDL) for pesticide HSL compounds are 15 times the individual low soil/sediment CRDL.

0001384

Table 9-14

MATRIX SPIKE RECOVERY LIMITS*

Fraction	Matrix Spike Compound	Water* Recovery	RPD	Soil/ Sediment Recovery	RPD
VOA	1,1-dichloroethene	61 - 145	14	59 - 172	22
VOA	Trichlorethene	71 - 120	14	62 - 137	24
VOA	Chlorobenzene	75 - 130	13	60 - 133	21
VOA	Toluene	76 - 125	13	59 - 139	21
VOA	Benzene	76 - 127	11	66 - 142	21
I	1,2,4-trichlorobenzene	39 - 98	28	38 - 107	23
BN	Acenaphthene	46 - 118	31	31 - 137	19
BN	2,4-dinitrotoluene	24 - 96	38	28 - 89	47
BN	Pyrene	26 - 127	31	35 - 142	36
BN	N-nitroso-di-n-propylamine	41 - 116	38	41 - 126	38
I	1,4-dichlorobenzene	36 - 97	28	28 - 104	27
Acid	Pentachlorophenol	9 - 103	50	17 - 109	47
Acid	Phenol	12 - 89	42	26 - 90	35
Acid	2-chlorophenol	27 - 123	40	25 - 102	50
Acid	4-chloro-3-methylphenol	23 - 97	42	26 - 103	33
Acid	4-nitrophenol	10 - 80	50	11 - 114	50
Pest	Lindane	56 - 123	15	46 - 127	50
Pest	Heptachlor	40 - 131	20	35 - 130	31
Pest	Aldrin	40 - 120	22	34 - 132	43
Pest	Dieldrin	52 - 126	18	31 - 134	38
Pest	Endrin	56 - 121	21	42 - 139	45
Pest	4,4'-DDT	38 - 127	27	23 - 134	50

*Referenced - USEPA Contract Laboratory Program - revised February 1988.

Note: These limits are for advisory purposes only.

Table 9-15

CONTRACT REQUIRED SURROGATE SPIKE RECOVERY LIMITS*

Fraction	Surrogate Compound	Low/Medium Water	Low/Medium Soil/Sediment
VOA	Toluene-d_8	88 - 110	81 - 117
VOA	4-bromofluorobenzene	86 - 115	74 - 121
VOA	1,2-dichloroethane-d_4	76 - 114	70 - 121
BNA	Nitrobenzene-d_5	35 - 114	23 - 120
BNA	2-fluorobiphenyl	43 - 116	30 - 115
BNA	p-terphenyl-d_{14}	33 - 141	16 - 137
BNA	Phenol-d_5	10 - 94	24 - 113
BNA	2-fluorophenol	21 - 100	25 - 121
BNA	2,4,6-tribromophenol	10 - 123	19 - 122
Past	Dibutylchlorendate	(24 - 154)**	(20 - 150)**

*Referenced - USEPA Coatrsct Laboratory Program, revised July 1985.

**These limits are for advisory purposes only. They are not used to determine if a sample should be reanalyzed. When sufficient data become available, the USEPA may sat performance basad contract required windows.

Table 9-16

SAMPLE PREPARATION METHODS

Method Reference	Method Number	Brief Description of Method
SW	3550	Sonication Extraction - Soils - Organic Analysis
SW	3510	Separatory Funnel Liquid-Liquid Extraction - Waters - Organic Analysis
SW	5030	Purgo-and-Trap - Water and Soil - Organic Analysis
SW	3010	Acid Digestion of Aqueous Samples for Total Metals for ICAP
SW	3020	Acid Digestion of Aqueous Samples for Total Metals for Furnace
SW	3050	Acid Digestion of Sediments, Sludgoa, and Soils for Total Metals

SW: PPA "Test Methods for Evaluating Solid Wastes" SW-846, Third Edition, September 1986

to be used for preparation of samples (i.e., digestions, extractions, purge and trap, etc).

Hethodology references contain specific QC criteria associated with the particular methods. These specific requirements include calibration, tuning, and QC samples and are described in detail within the methods. Daily performance tests and demonstration of precision and accuracy are required. [Detection limits are updated 8t least annually.1

Eazardous waste characteristic parameters, which include ignitability, corrosivity, reactivity, and extraction procedure (EP) toxicity, are also performed at E & E's ASC and are listed as a separate category in Table 9-5. Where possible, these parameters are subject to the same QA/QC requirements as specified in Sections 5, 10, and 11 of this document. In addition to BP toxicity, E & E's ASC can perform the California wet test or the toxicity characteristic leaching procedure (TCLP).

For marine sediments, procedures consistent with the State of Florida Department of Environmental Regulation are used for digestion (see Deepwater Ports Uaintenance Dredging and Disposal Manual). (Note: Hydrogen peroxide will be used to remove organic matter rather than perchloric acid). Analysis will be done according to the above SW-846 criteria listed in Table 9-5. Sediment samples will be digested within 48 hours and will not be preserved.

For biological tissue testing, E & E's ASC adapts procedures set forth in Official Methods of Analysis published by the Association of Official Analytical Chemists (AOAC). Most commonly requested analyses involve analyzing fish tissue for the presence of pesticides/PCBs or metals. Generally, the detection limits and QC acceptance criteria are equivalent to those listed for SU-846 soil samples. However, data quality objectives depend heavily on the tissue type and must be determined on a site-specific basis, for biological analyses.

Table 9-17 lists analytical method data for selected radiometric/radioactive element analyses which may be required for this program. *[Any* required radiometric analyses will be performed by a subcontract laboratory and not the ASC.]

[Bold items enclosed in brackets denote *changes* from original text]

Table 9-17

SELECTED RADIOMETRIC ANALYTICAL METHODS FOR WATER SAMPLES

Method Number	Brief Description of Method	Detection Limit
900	Gross Alpha	0.5 ± 0.4 pc/L
903.1	Radium 226	0.2 ± 0.2 pc/L
904.1	Radium 228	0.1 ± 0.09 pc/L

SOURCE: EPA-600-4-80-032 "Prescribed Procedures for Measurement of Radioactivity in Drinking Water", USEPA, August 1980.

NOTE: pc/L = pico Curies per liter

10. DATA REDUCTION, VALIDATION, AND REPORTING

QA/QC requirements from both methodology and company protocols will be strictly adhered to during sampling and analytical work. All data generated will be reviewed by comparing to guidelines established in SW-846 Chapter 1 (Quality Control), or the CLP criteria outlined in the following documents:

- EPA, Hazardous Site Control Division, Laboratory Data Validation Functional Guidelines for Evaluating Pesticides/PCB's Analyses, R-582-5-5-01, Hay 28, 1985.
- EPA, Hazardous Site Control Division, Laboratory Data Validation Functional Guidelines for Evaluating Organics Analyses, R-582-5-5-01, Hay 28, 1985.
- EPA, Office of Emergency and Remedial Response, Laboratory Data Validation Functional Guidelines for Evaluating Inorganics Analyses, 1985.

Note that CLP criteria consistent with the current Statement of Work (organics - February 1988, inorganics - July 1987) will be used if different from the above documents. The current criteria are listed in Section E (QA/QC Requirements) of the Statement of Work. Sections 4, 8, 9, and 14 of this document include some of the QC criteria to be utilized in the data validation process. Standard operating procedures for EPA CLP organic and inorganic data package review will be adapted to incorporate data validation guidelines in the NEESA manual: Sampling and Chemical Analysis Quality Assurance Requirements for the Navy Installation Restoration Program.

For non-CLP methods, all data generated will be reviewed by comparing calibration, accuracy and precision to the QC criteria listed in the method and Table 9-6, 9-8, and 9-10. The validation procedure is generally composed of the following steps:

[Bold items enclosed in brackets denote changes from original text]

- verify Correct samples were analyzed and reported in appropriate units;
- verify preservation and holding times as specified in Tables 7-1 through 7-3;
- verify calibration curve is valid and checked daily;
- verify no analytes are present in the method blanks and that one blank is run every 20 samples;
- verify that a blank spike laboratory control sample (see Table 8-1) is run every 20 samples and that percent recovery is within 20% of the known amount;
- verify that a replicate and matrix spike, or matrix spike and spike duplicate are run every 20 samples, and that QC criteria are in-control.

All calculations and data manipulations are included in the appropriate method or internal standard operating procedures. All QC data are plotted on control charts. Laboratory supervisors will verify all QC sample calculations and at least 10% of the sample calculations to ensure data manipulations are correct. Control charts are checked by the supervisor and audited routinely by a QC chemist. For a further discussion of control chart procedures see the laboratory QA/QC procedures manual.

All data will be documented in bound laboratory log books or on raw data output directly from the instrument. Analytical and QC data will be compiled in a data package or summary report vhich will be submitted to the project manager. The reports and associated raw data will be stored in the control job file at the ASC for a period of five years after the final report is issued. A copy of these data will be provided to the Navy, upon request.

Reports will be reviewed by the laboratory supervisor, the QA officer, ASC manager and/or director, and the project manager. All data will be evaluated for precision, accuracy and completeness. Field QC samples are not generally distinguished from routine samples by personnel at the ASC. All field QC results will be validated by the field QC chemist assigned by the project manager. The following information will be included in the analytical reports:

- For those analyses requiring EPA CLP procedures, E & E will provide a data package in the USEPA CLP format. This will include results, matrix spike and duplicate information, calibration, tuning where appropriate, and blank results. All supporting raw information will be provided. Full details of the data package contents are provided in the relevant Statement of Work.

- For those analyses or series of analyses which do not require CLP procedures, a data tabulation including results and supporting QC information will be provided. Currently, tabulated results are separated by method and by matrix with several samples reported per page. Raw data will be available for later inspection, if required, and maintained in the control job file.

The ASC will provide a copy of all control charts associated with the samples in a monthly progress report. Figure 10-1 presents a data flow/reporting scheme. An example of the data reporting format is contained in Appendix G.

As part of the investigation report prepared for each site, summary tables, isopleth maps, surface contour maps, graphs, bar charts, etc., will be used, as appropriate, to most effectively summarize/present the data and findings generated for that site.

DATA GENERATED BY ANALYSTS

↓

DOCUMENTED IN LOGBOOKS/ DATA SHEETS OR ON MAGNETIC TAPE

↓

DATA APPROVED BY RESPECTIVE LAB SUPERVISOR

↓

DATA TABULATED AND COMPILED INTO REPORT FORMAT
(Job File)

↓

REPORT APPROVED BY RESPECTIVE SUPERVISOR

↓

REPORT APPROVED BY REPORTS OR QA/QC COORDINATOR

↓

REPORT APPROVED BY LABORATORY MANAGER

↓

REPORT APPROVED AND VALIDATED BY A CHEMIST
FROM CORPORATE QA/QC UNIT

↓

REPORT APPROVED BY PROJECT MANAGER

↓

VALIDATED ANALYTICAL REPORT PACKAGE SUBMITTED TO CLIENT

Figure 10–1 DATA FLOW/REPORTING SCHEME

11. INTERNAL QUALITY CONTROL CHECKS

QC data are necessary to determine precision and accuracy and to demonstrate the absence of interferences and/or contamination of glassware and reagents. Field QC will include duplicates, trip blanks, field blanks, field equipment blanks, and miscellaneous field QC samples. Labortory-based QC will consist of standards, replicates, spikes, blanks, and blank spikes.

11.1 FIELD [QUALITY CONTROL] (QC) SAMPLES

Duplicate samples at each site will be collected at a frequency of 10 percent for each sample medium (i.e. soil/sediment, water, etc.) as a general rule. The duplicate sampling requirements for each site will be described in detail in the SQAPP and site-specific work plan. Duplicate samples provide insight as to the homogeneity of sample matrix, and enable consideration of variations in contaminant concentrations present in the matrix. Duplicate sample data establishes a certain degree of confidence in the samples representation of site conditions.

Trip blanks are collected to establish that the transport of sample bottles to and from the field does not result in the contamination of the sample from external sources. Trip blanks will be collected only for, and in conjunction with, volatile organics analyses (VOA) sample tasks. If the 40 ml VOA vials are shipped to the field team by the ASC sample custodian, two vials filled with analyte-free water (capped and labeled) will accompany the shipment to and from the lab. In the event that VOA vials are shipped to the field from retail bottle source such as I-Chem, trip blanks will be prepared upon receipt. Two 40 ml vials will be filled with organic free water, sealed, and labeled in a clean area. As a rule, no more than one trip blank will be shipped per day during the VOA sampling activity.

[Bold items enclosed in brackets denote changes from original text]

Field equipment blanks are blank samples (sometimes called transfer blanks or rinsate blanks) designed to demonstrate that sampling equipment has been properly prepared and cleaned before field use, and that cleaning procedures between samples are sufficient to minimize cross contamination. If a sampling team is familiar with a particular site, they may be able to predict which areas or samples are likely to have the highest concentration of contaminants. Unless other constraints apply, these samples should be taken last to avoid excessive contamination of sampling equipment.

Field blanks will be collected daily in the field as a check to assess the potential affects of ambient conditions upon sample integrity. One set of field blanks will be prepared for analytical parameters required of samples collected on each given sampling day. The bottles will be filled with organic free water and preserved as required for analyses.

Miscellaneous field QC samples will be collected as required by the site-specific workplans and addressed in the SQAPP. This tube of QC sampling involves the analysis of investigation water sources and monitoring well drilling fluids if used. Because the water supply source is used in decontamination and well drilling activities, it is essential that the possibility for introduction of outside contaminants be investigated through sampling. Drilling fluids (muds) that are used during well installation also must be analyzed in order to assess the possibility of mud constituents affecting groundvater samples.

The collection of field QC samples, including the conditions under which the samples were collected, will be thoroughly documented in the field logbook.

11.2 **LABORATORY [QUALITY CONTROL] (QC)** ANALYSES

Laboratory-based QC will comprise at least 10% of each data set generated and will consist of blanks, duplicate/replicates, standards, spikes, QC check samples, and blank spikes. Depending upon the particular method used, QC may be rigorous, but at a minimum, one spike or replicate per 10 samples or run, whichever is greater, will be analyzed for every analytical run. Field duplicates and field blanks will be analyzed by the laboratory as samples and will not necessarily

[bold items enclosed in brackets denote *changes* from original text']

0001390

be identified to the laboratory as duplicates or blanks. The same samples used for field duplicates will be split by the laboratory and used for the laboratory duplicate, matrix spike or matrix spike duplicate. QC records will be retained and results reported with sample data. Specific QC requirements for CLP organic and inorganic analyses are incorporated in USEPA's Contract Laboratory Program, Scope of Work for Organic and Inorganic Analyses.

All QC results will be tabulated or plotted on control charts. Control limits are calculated for the first twenty to thirty results and updated annually or every **100** results, whichever is more frequent. Control limits are compared to the QC acceptance criteria of the method when appropriate or used internally to judge the quality of the data. ASC procedures for control charts are discussed in the laboratory QA/QC procedures manual.

Laboratory **Blanks.**

Three types of blanks routinely analyzed in the laboratory are field blanks, method blanks, and reagent blanks. The usual field blanks, namely trip blanks, equipment blanks, and field blanks and miscellaneous QC samples are described above. They are analyzed in the laboratory as samples, and their purpose is to assess the sampling and transport procedures as possible sources of sample contamination. Method blanks and reagent/ solvent blanks are used to assess laboratory procedures as possible sources of sample contamination.

- Method blanks for all samples consist of deionized water which is subjected to the entire sample procedure, including extraction, distillation, digestion, etc. as appropriate for the analytical method being utilized.

- Reagent/solvent blanks consist of individual reagents or solvents subjected to the entire sample procedure as appropriate for the analytical method being utilized. The blanks are only used if contamination problems are indicated by the method blank or if a new lot of materials is being checked before use.

Laboratory duplicate/replicate samples are aliquots of a single sample that is split on arrival at the laboratory or upon analysis. Duplicate/ replicate samples are often made from the field duplicate

[Bold items enclosed in brackets denote changes from original text]

samples provided by the field sampling team. Significant differences between laboratory duplicate/replicate samples are generally due to analytical technique, whereas significant differences in field duplicate samples may be due to a variety of reasons. Duplicate/replicate samples are used for metals analysis and most general analytical methods. Precision for organic analysis is generally determined with a matrix spike duplicate.

Calibration Standards

A calibration standard is prepared in the laboratory by dissolving a known amount of a pure compound in an appropriate matrix. The final concentration calculated from the known quantities is the true value of the standard. The results obtained from these standards are used to generate a standard curve and thereby quantitate the compound in the environmental sample. 'A minimum of three calibration standards will be used to generate a standard curve for all analyses. For organic analyses, a five point calibration curve is generally used.

Check Standard

A check standard is prepared in the same manner as a calibration standard or may be obtained from USEPA. A check standard is obtained from a source independent of the source of the Calibration standard. The final concentration calculated from the known quantities is the "true" value of the standard. The important difference in a check standard is that it is not carried through the same process used for the environmental samples, but is analyzed without digestion or extraction. A check standard result is used to validate an existing concentration calibration standard file or calibration curve. The check standard can provide information on the accuracy of the instrumental analytical method independent of various sample matrices. A check standard is usually analyzed if the spike sample results are out-of-control.

Spike Sample

A sample spike is prepared by adding to an environmental sample (before extraction or digestion), a known amount of pure compound of the same type that is to be assayed in the environmental saaple. These

[Bold items enclosed in brackets denote *changes* from original text]

spikes simulate the background and interferences found in the actual samples and the calculated percent recovery of the spike is taken as a measure of the accuracy of the total analytical method. When there is insignificant change in volume due to the spike, it is calculated as follows:

$$\%R = \frac{100\ (0-X)}{T}$$

Where: %R = Percent recovery;

0 = Measured value of analyte;

X = Measured value of analyte concentration in the sample before the spike is added; and

T = Quantity of added spike.

Limits for acceptable percent recovery are established in the methodology references and presented in Section 9 of this document.

Internal Standard

An internal standard is prepared by adding a known amount of pure compound to the environmental sample; the compound selected is not one expected to be found in the sample, but is similar in nature to the compound of interest. Internal standards are added to the environmental sample just prior to analysis. (Note: Internal standards and surrogate spikes are different compounds. The internal standard is for quantification purposes using the relative response factor; surrogate spikes indicate the percent recovery and, therefore, the efficiency of the methodology.)

Matrix **Spike/Duplicate**

Aliquots are made in the laboratory of the same sample and each aliquot is treated exactly the same throughout the analytical method. Spikes are added at approximately 10 times the method detection limit. The relative percent difference (RPD) between the values of the matrix spike and matrix spike duplicate, as calculated below, is taken as a measure of the precision of the analytical method:

$$RPD = \frac{(D_1 - D_2)}{(D_1 + D_2)/2} \times 100$$

[Bold items enclosed in brackets denote changes from original text]

Where: RPD = Relative percent difference;

D_1 = First sample value; and

D_2 = Second sample value (duplicate).

In general, the acceptance limit for RPDs between laboratory duplicates should not exceed 20% for validation in homogeneous samples. Refer to Section 9 for criteria on RPDs. Acceptable RPDs may vary depending on actual levels.

Quality Control Check Samples

Inorganic and organic control check samples are available from USEPA free of charge and are used as a means of evaluating analytical techniques of the analyst. Control check samples are subjected to the entire sample procedure, including extraction, digestion, etc. as appropriate for the analytical method utilized.

Blank Spikes

A blank spike sample is prepared by adding a known amount of analytes representative of the class compounds targeted by the procedure, to deionized water. Blank spikes are used to assess the effects of the actual process of sample analysis without considerations of matrix influences or sample non-homogeneity. For GC/MS methods, surrogates spiked into the routine method blank are adequate as control analytes. For other methods, blanks should be spiked, analyzed and interpreted in the same manner as matrix spike samples. (Note: The blank spike is a requirement unique to NEESA. Blank spikes are not routinely used at the ASC, because the analysis of known samples satisfies the same QA objectives. For any methods in which known samples are not equivalent to a blank spike, a blank spike program will be instituted for NEESA related samples).

[Bold items enclosed in brackets denote changes from original text]

12. PERFORMANCE AND LABORATORY AUDITS

Performance and laboratory audits include careful evaluation of both field and laboratory QC. Laboratory audits are performed on a regularly scheduled basis during the lifetime of the project to determine the accuracy of the measurement systems.

Laboratory audits are of two types--external and internal. External audits take place at an approximate frequency of once every two months, and are carried out by such certifying agencies as USEPA, New York State Department of Eealth, the American Industrial Hygiene Association, the Corps of Engineers, the United States Air Force, the United States Navy, state agencies and major industrial clients. These external audits are specific to the needs of the individual agency or client, but all include reviews of analytical capabilities and procedures; chain-of-custody procedures; documentation control; quality control and quality assurance; and laboratory organization. All include analysis of blind samples for performance evaluation. They are, therefore, a vital and objective element of E & E's QA program.

Internal audits of laboratory functional groups take place at [six-week] intervals. A QA officer will audit a laboratory by reviewing the analytical logbooks, control charts, and job files for the period since the previous audit and preparing a report to laboratory management listing discrepancies from acceptable procedures. Follow-up action by management may include sample re-analysis; an amended report to a client if necessary; and retraining of offenders. [A schedule for field audits will be included 'in the site-specific QAPP.]

(Bold items enclosed in brackets denote changes from original text]

13. PREVENTIVE MAINTENANCE

All laboratory and field instruments and equipment used for sample analysis will be serviced and maintained only by qualified personnel. Some major laboratory instruments (e.g., GC/MS, ICAP, AA) are maintained under service agreements with the manufacturer and will be serviced by manufacturer approved service agents. All other instruments are maintained by senior analysts and electronic technicians. The technicians are qualified service agents approved by several manufacturers for work on their instruments. All repairs, adjustments, and calibrations will be documented in an appropriate logbook or data sheet that will be kept on file. The instrument maintenance logbooks will clearly document the date, the description of the problems, the corrective action taken, the result, and who performed the work.

E & E maintains a stock of spare parts and consumables for all analytical equipment. In addition, there is sufficient redundancy of equipment items to allow operations to continue with a reasonable level of equipment failures.

[Routine preventive aaintenance procedures are outlined in the standard operating procedures (SOPs) for major laboratory instruments and are summarized in Table 13-1. The frequency of routine procedures will vary depending on the production workload and types of samples analyzed.]

[Bold items enclosed in brackets denote changes from original text]

Table 13-1

ROUTINE INSTRUMENT MAINTENANCE OPERATION

Instrument	Operation	Frequency
Atomic Absorption Spectrophotometer	- Graphic tube replacement	Daily
	- Clean windows and lenses	Daily
	- Change injection tubing	Quarterly
ICAP	- Change nebulizer tips	As needed.
	- Change pump tubing	Daily
	- Change injector tips and torches	Quarterly
Gas Chromatograph	- Change septum	Daily
	- Clip column	Daily
	- Change injection port liner	Daily
	- Change column	As needed*
	- Bake detectors	As needed*
Mass Spectrometer	- Clean source	As needed*
Purge and Trap Unit	- Change trap	As needed.
	- Steam-clean lines	As needed*
	- Refurbish	Yearly

(UZ)XG120:D2945, #3004, PM=27

*Approximately monthly.
**Approximately quarterly.

0001394

14. PROCEDURES USED TO ASSESS DATA ACCURACY, PRECISION, AND COMPLETENESS

Performance of the following calculations will be documented and included in the QC section.

14.1 ACCURACY

Accuracy is the difference between an average value and the "true" value when the latter is known or assumed. The term "accuracy" is normally used interchangeably with "percent recovery," and describes either recovery of a known amount of analyte (spike) added to a sample of known value, or recovery of a synthetic standard of known value.

Where: SSR = Spike sample results;
SR = Sample result; and
SA = Spike added.

NOTE: The units for the concentrations of spikes, samples, and observed and true values vary based on the analysis. However, they are typically µg/L or mg/L for water samples and µg/kg or mg/kg for soil samples.

Average

The average (or arithmetic mean) of a set of "N" values is the sum of the values divided by "N":

$$X = \frac{\sum_{i=1}^{n} x_i}{n}$$

[Bold items enclosed in brackets denote changes from original text]

14.2 PRECISION

Relative to the data from a single test procedure, precision is the degree of mutual agreement among individual measurements made under prescribed conditions. An estimate of standard deviation is normally used to describe the precision of a method.

Standard Deviation Estimate

Standard deviation estimate is the most widely used measure to describe the dispersion of a set of data. Normally, ± SD will include 68%, and ± 2SD will include about 95%, of the data from a study.

Relative Standard Deviation (RSD)

The estimate of precision of a series of replicate ueasurements will usually be expressed as the relative standard deviation (RSD):

Relative Percent Difference (RPD)

A measure of the difference between two samples assumed to be identical through dividing (splitting) an original sample, analyzing each portion, identifying the values of the first replicate (X_1) and that of the second replicate (X_2), and dividing the 'difference by the mean (X) of X_1 and X_2.

14.3 COMPLETENESS

Completeness is a measure of the amount of valid data obtained from a measurement system compared to the total amount expected to be obtained under normal conditions. A 95% completeness figure is usually required for a particular analysis and overall project objective.

[14.4 QUALITY CONTROL CHARTS

Quality control charts are prepared after every 20 determinations of precision and accuracy. The charts are prepared by determining the mean of the determinations, setting warning limits of ±2 standard deviations, and setting control limits of ±3 standard deviations from the mean. The following equations are used:

[Bold items enclosed in brackets denote changes from original text]

0001395

$$\text{Mean} = \frac{\sum_{i=1}^{n} x_i}{n}$$

where n is the number **of** determinations **and** x_i is the numerical value for the **i** determination.

$$\text{Standard Deviation} = \frac{\sum_{i=1}^{n} (x_i - x)^2}{n - 1}$$

Analysis is considered "out of control" whenever one of the following occurs:

- One value is outside control limits;
- Two consecutive values fall outside warning limits; or
- Seven consecutive values fall on the same side **of** the mean.

In the event of an "out-of-control" analysis, corrective action will be initiated as described in Section 14.]

[Bold items, enclosed in brackets denote changes from original text]

15. CORRECTIVE ACTION

Corrective actions can be initiated as a result of performance and system audits, laboratory and interfield comparison studies, specific problems, and/or a QA program audit. They may also be required as a result of a request from the client. E & E will take all corrective action necessary to resolve an analytical problem. Success or failure of client-requested corrective actions will be reported to client, with an estimate of effect on data quality, if any.

Corrective actions may include altering procedures in the field, conducting subsequent audits, or modifying laboratory protocol. Time and type of corrective action, if needed, will depend on the severity of the problem and relative overall project importance. The project manager is responsible for initiating corrective action and the ASC manager/director or the team leader is responsible for its implementation.

Precision and accuracy will be regularly tracked by the analytical staff to determine unacceptable results and to evaluate and implement corrective actions. Precision and accuracy criteria for all analyses are listed in Section 9 of this QAPP, and laboratory supervisors and QA/QC staff will evaluate analytical data against the accompanying quality control data for validity. Corrective actions may include, but are not limited to, recalibration of instruments using freshly prepared calibration standards; replacement of lots of solvent or other reagents that give unacceptable blank values; additional training of laboratory personnel; or reassignment, if necessary. Corrective actions in many cases may have to be defined as the need arises.

If substantial corrective action is required or if serious QA problems are encountered, the client will be notified by phone and in writing as soon as possible. All corrective action will be implemented and documented after notification and approval of Navy IR Program EIC.

[Bold items enclosed in brackets denote changes from original text]

Documentation

'The ASC maintains a rigorous documentation system to ensure that all data are compared against established QC criteria. Specific procedures for each laboratory are documented in an SOP approved by the QA coordinator, the ASC manager, and the ASC director. In general, all QC data are reviewed by the analyst, and approved by the supervisor, whom determines whether re-analysis is necessary and what corrective actions should be taken. Any out-of-control event that is submitted for reporting must be accompanied by a QA/QC discrepancy form describing vhy the data are acceptable and the corrective action taken.

The QA coordinator maintains a file of all QA/QC discrepancy forms (Appendix E) and is responsible for insuring that follow-up corrective action is taken. The QA coordinator reports QA/QC concerns to ASC and corporate management in a monthly report. The QA coordinator also reviews 20% of all final data reports and all large data packages over a specified level and reports any problems, that have not had appropriate corrective action, to management.

[Bold items enclosed in brackets denote changes from original text]

16. QUALITY ASSURANCE REPORTS

A general QA report which summarizes problems encountered throughout the laboratory effort, including sample custody, analyses, and reporting, is provided monthly to E & E's laboratory management by the QA coordinator. This report identifies areas of concern and possible resolutions in an effort to ensure data quality.

Throughout the course of a project, the QA coordinator will provide a monthly progress report (HPR) to the project manager who will in turn send it to the Navy IR Program EIC monthly. The MPR will include the following information:

- Site name and contract number;
- Job number, sample number, client indentification, sample date, date received, and tests logged for all samples logged into LABMIS that month;
- Tabulated data for blanks, spikes, laboratory duplicates and controls;
- Any changes in existing methods or addition of new methods;
- Copies of all pertinent control charts;
- Summaries of out-of-control incidents with references to related QA/QC discrepancy forms.
- Description and justification for any changes in the QA program;
- Changes in QA or technical personnel, along with resumes of new personnel;
- All sample data approved by the project manager.

[Bold items enclosed in brackets denote changes from original text]

Upon completion of a project sampling effort, analytical and QC data will be included in a comprehensive report that summarizes the work and provides a data evaluation. A discussion of the validity of the results in the context of QA/QC procedures will be made, as well as a summation of all QA/QC activity.

A final QC data report will be sent to Navy IR Program EIC by the project manager, three weeks prior to the final report. The QC data report will include the following:

- Level D QC, 20% of the water and 20% of the soils. The contractor will submit a full CLP data package;
- Level C QC, all deliverables listed in Table 7.6 of the NEESA manual.

Al raw data, control charts, chain-of-custody, logbooks, instrument calibration and other sample related information will be' stored at the ASC. The data will be stored for 5 years.

Serious analytical problems will be reported to the Navy IR Program EIC. Time and type of corrected action if needed, will depend on the severity of the problem and relative overall project importance. Corrective actions may include altering procedures in the field, conducting an audit, or modifying laboratory protocol. All corrective action will be implemented after notification and approval of the Navy IR Program EIC.

[Bold items enclosed in brackets denote changes from original text]

APPENDIX A

GENERALIZED WORKPLAN

OUTLINE

[Bold items enclosed in brackets denote changes from original text]

NAS PENSACOLA — GENERALIZED WORK PLAN OUTLINE

1. INTRODUCTION
2. SITE DESCRIPTION
3. SITE HISTORY
4. CLIMATOLOGY
5. BIOLOGICAL RESOURCES
6. SURFACE WATER HYDROLOGY
7. HYDROGEOLOGY
   - 7.1. Regional Hydrogeology
   - 7.2. Site Hydrogeology
8. PROJECT MANAGEMENT PLAN
9. SITE MANAGEMENT PLAN
10. HEALTH AND SAFETY PLAN
11. QUALITY ASSURANCE PROJECT PLAN
12. AERIAL PHOTOGRAPH ANALYSIS
13. UTILITIES SURVEY
14. FIELDWORK METHODOLOGY
    - 14.1. Phase I -- Screening
      - 14.1.1. Physical Survey
        - 14.1.1.1. Overall Physical Reconnaissance
        - 14.1.1.2. HNu/OVA Surface Emission Survey
        - 14.1.1.3. Radiation Survey
        - 14.1.1.4. Habitat/Biota Survey
        - 14.1.1.5. Asbestos Survey (Disposal Rubble)
        - 14.1.1.6. Hydrologic Assessment
      - 14.1.2. Geophysical Survey
        - 14.1.2.1. Electromagnetic Conductivity Survey
        - 14.1.2.2. Maggnetometry Survey
        - 14.1.2.3. Very Low Frequency Survey
        - 14.1.2.4. Ground Penetrating Radar Survey
        - 14.1.2.5. Seismic Refraction Survey
        - 14.1.2.6. Seismic Reflection. Survey

[Bold items enclosed in brackets denote changes from original text]

14. FIELDWORK METHODOLOGY (Continued)

14.1. Phase I -- Screening (Continued)

14.1.3. Analytical Screening

14.1.3.1. Soil Headspace
14.1.3.2. Soil Gas
14.1.3.3. Laboratory Analyses -- Surface Water
Sediment
Soil
Groundwater

14.2 Phase II -- Characterization

14.2.1. Surface Water and Sediment Sampling
14.2.2. Biota Sampling
14.2.3. Soil Sampling
14.2.4. Shallow Monitoring Well Installation and Development
14.2.5. Groundwater Sampling
14.2.6. Hydrologic Assessment
14.2.7. Air Sampling

14.3. Phase III -- Extent Delineation

14.3.1. Surface Water and Sediment Sampling
14.3.2. Biota Sampling
14.3.3. Soil Sampling
14.3.4. Shallow Monitoring Well Installation and Development
14.3.5. Intermediate and Deep Monitoring Well Installation and Development
14.3.6. Groundwater Sampling
14.3.7. Hydrologic Assessment
14.3.8. Air Sampling

14.4. Phase IV -- Extent Delineation

14.4.1. Shallow Monitoring Well Installation and Development
14.4.2. Intermediate and Deep Monitoring Well Installation and Development
14.4.3. Groundwater Sampling
14.4.4. Hydrologic Assessment

14.5. Topographic Survey

[Bold items enclosed in brackets denote changes from original text]

14. FIELDWORK METHODOLOGY (Continued)

    14.6. Field Quality Assurance/Quality Control

        14.6.1. Documentation
        14.6.2. QA/QC Samples

    14.7. Summary of Sampling and Analytical Requirements

    14.8. Decontamination and Vaste Management Procedures

        14.8.1. Decontamination Procedures
        14.8.2. Vaste Management Procedures

15. LABORATORY QUALITY ASSURANCE/QUALITY CONTROL

16. GROUNDWATER MODELING

17. TREATABILITY STUDY

18. BASELINE RISK ASSESSMENT

19. FEASIBILITY STUDY

20. REPORT

21. DOCUMENT REVISION

22. PROJECT MANAGEMENT

23. SCHEDULE

24. REFERENCES

APPENDICES

Appendix A. Site-Specific Safety Plan
Appendix B. Site-Specific Quality Assurance Project Plan

[Bold items enclosed in brackets denote changes from original text]

4

APPENDIX B

SITE-SPECIFIC QUALITY ASSURANCE PROJECT PLAN (SQAPP) FORM

[Bold items enclosed in brackets denote changes from original text]

Section 10 — Title and Approval Page

Vork Plan Group: A
Site No.: 1
Site Name: Sanitary Landfill

Prepared by: Barry R. Levine
Ecology and Environment, Inc.
1203 Governor's Square Boulevard, Suite 401
Tallahassee, Florida 32301

Prepared for: Department of the Navy
Southern Division
Naval Facilities Engineering Command
2155 Eagle Drive, P.O. Box 10068
Charleston, South Carolina 29411-0068
Contract Number N62467-88-GO200

Signature Approvals:

E & E Project Manager: _____
J. Barksdale

E & E QA/QC Director or
Assistant QA/QC Director: _____
T. Yeates/R. Short

B & E ASC Director: _____
A. Clifton

E & B QA/QC Project Officer: _____
A. Schuessler

[Bold items enclosed in brackets denote changes from original text]

Section 2.0 Table of Contents

		Page	Date
Section 1.0	-- Title and Approval Page	1	3-20-89
Section 2.0	-- Table of Contents	2	3-20-89
Section 3.0	-- Project Summary	3	3-20-89
Section 4.0	-- Project Organization and Responsibility	5	3-20-89
Section 5.0	-- QA/QC Objectives for Measurement Data	6	3-20-89
Section 6.0	-- Fieldwork and Sampling Procedures	7	3-20-89
Section 7.0	-- Sample Custody	7	3-20-89
Section 8.0	-- Calibration Procedures and Frequency	7	3-20-89
Section 9.0	-- Analytical Procedures	7	3-20-89
Section 10.0	-- Data Reduction. Validation. and Reporting	8	3-20-89
Section 11.0	-- Internal Quality Control Checks	8	3-20-89
Section 12.0	-- Performance and Systems Audits	8	3-20-89
Section 13.0	-- Preventive Maintenance	9	3-20-89
Section 14.0	-- Procedures to Assess Accuracy, Precision. and Completeness of Data	9	3-20-89
Section 15.0	-- Corrective Action	9	3-20-89
Section 16.0	-- Quality Assurance Reports to Management	9	3-20-89
Appendix A	-- Additional Personnel Biographies	9	3-20-89

(Bold items enclosed in brackets denote changes from original text]

Section 3.0 -- Project Summary

Work Plan Group: A

Site No.: 1

Site Name: Sanitary Landfill

Site Description: A complete site description and history are presented in Sections 2.0 and 3.0 of the attached work plan.

Phase I -- Field Screening

Physical Survey (check all that apply):

___ Overall Physical Reconnaissance
___ HNu/OVA Surface Emission Survey
___ Radiation Survey
___ Habitat/Biota Survey
___ Asbestos Survey (in Rubble)
___ Hydrologic Assessment

Geophysical Survey (check all that apply):

___ Electromagnetic Conductivity:
  ___ EM-31 ___ En-34
___ Magnetometry
___ Very Low Frequency
___ Ground Penetrating Radar
___ Seismic Refraction
___ Seismic Reflection

Analytical Screening (check all that apply):

___ Field'Analyses:
  ___ Soil Headspace Analyses: Planned Number of Samples ___
  ___ Soil Gas Analyses : Planned Number of Samples ___
___ Laboratory Analyses:

PLANNED NUMBER OF SAMPLES		CATEGORIES OF ANALYSES
Surface Water	___	___ Metals
Sediment	___	___ Purgeable Aromatics
Soil	___	___ Purgeable Halocarbons
Groundwater	___	___ Polynuclear Aromatic Hydrocarbons
Duplicates	___	___ Phenols
Trip Blanks	___	___ Pesticides
Field Blanks	___	___ Polychlorinated Biphenyls
Rinsate Blanks	___	___ Total Organic Halogens
Other	___	___ Total Recoverable Hydrocarbons

[Bold items enclosed in brackets denote *changes* from original text]

Section 3.0 -- Project Summary (Continued)

Phase II -- Characterization

PLANNED NUMBER OF SAMPLES

Surface Water	___	Air	___	Duplicates	___
Sediment	___	Biota:		Trip Blanks	___
Soil	___	Flora	___	Field Blanks	___
Groundwater	___	Fauna	___	Rinsate Blanks	___

. CATEGORIES OF ANALYSES

___ Metals
___ Cyanide
___ Purgeable Aromatics
___ Purgeable Halocarbons
___ Base/Neutral Extractables
___ Acid Extractables
___ Polynuclear Aromatic Hydrocarbons
___ Pesticides
___ Polychlorinated Biphenyls
___ Total Recoverable Hydrocarbons

Additional analytical categories are identified below:

[Bold items enclosed in brackets denote changes from original text]

Section 4.0 -- Project Organization and Responsibility

The overall organizational structure for this site is discussed in Section 4.0 of the GQAPP. Site-specific designated personnel and their responsibilities are listed below:

Site Manager:

Team/Task Leader(s):

Field Support Personnel:

Biographies for those personnel listed above which are not included in the GQAPP are included in Appendix A of this document.

[Bold items enclosed in brackets denote changes from original text]

Section 5.0 — QA/QC Objectives for Measurement Data

Criteria for reporting the accuracy, precision, and completeness of data are presented in Section 5.0 of the GQAPP. Detection limits for screening and quantitatative analyses are presented in Section 9.0 of the GQAPP. Procedures used to assess data accuracy, precision, and completeness are presented in Section 14.0 of the GQAPP. All analytes (including field parameters), sample media, and method numbers relevant to the investigation of this site are listed in the following table, which also identifies any modifications to the accuracy (A), precision (P), completeness (C), and detection limit (DL) criteria specified in the above-referenced GQAPP sections:

Analyte	Media	Method No.	A	P	C	DL
Screening Analyses						
Laboratory Analyses						
Field Parameters						

Note: N/M = No Modifications from GQAPP.

[Bold items enclosed in brackets denote changes from original text]

Section 6.0 -- Fieldwork and Sampling Procedures

Fieldwork and sampling procedures are presented in Section 6.0 of the GQAPP. Uodifications to these procedures are described below:

Section 7.0 — Sample Custody

Sample custody procedures are presented in Section 7.0 of the GQAPP. Uodifications to these procedures are described below:

Section 8.0 -- Calibration Procedures and Frequency

Calibration procedures and frequency are presented in Section 8.0 of the GQAPP. Modifications to these procedures are described below:

Section 9.0 — Analytical Procedures

Screening and quantitative analytical procedures are presented in Section 9.0 of the GQAPP. Site-specific accuracy, precision, completeness, and detection limit criteria are presented in Section 5.0 of this SQAPP. Modifications to any other of the analytical procedures are described below:

[bold items enclosed in brackets denote changes from original text]

0001404

Section 10.0 -- Data Reduction, Validation, and Reporting

Data reduction, validation, and reporting procedures are presented in Section 10.0 of the GQAPP. Modifications to these procedures are described below:

Section 11.0 -- Internal Quality Control Checks

Internal quality control check procedures are presented in Section 11.0 of the GQAPP. Modifications to these procedures are described below:

Section 12.0 -- Performance and System Audits

Performance and system audit procedures are presented in Section 12.0 of the GQAPP. Specific audits planned for this site investigation are listed below:

Audit Type	Frequency/Date	Description

[Bold items enclosed in brackets denote changes from original text]

Section 13.0 -- Preventive Maintenance

Preventive maintenance procedures are presented in Section 13.0 of the GQAPP. Modifications to these procedures are described below:

Section 14.0 — Procedures Used to Assess Accuracy, Precision, and Completeness of Data

Procedures used to assess the accuracy, precision, and completeness of data are presented in Section 14.0 of the GQAPP. Modifications to these procedures are described below:

Section 15.0 — Corrective Action

Corrective action procedures are presented in Section 15.0 of the GQAPP. Modifications to these procedures are described below:

Section 16.0 — Quality Assurance Reports

Quality assurance report procedures are presented in Section 16.0 of the GQAPP. Hodifications to these procedures are described below:

Appendix A — Additional Personnel Biographies

Personnel assigned to this site investigation whose biographies do not appear in the GQAPP are listed below; biographies for these site personnel are presented on the following pages.

[Bold items enclosed in brackets denote *changes* from original text]

0001405

APPENDIX C

BIOGRAPHIES OF KEY PERSONNEL

[Bold items enclosed in brackets denote changes from original text]

RICHARD J. RUDY, P.G. **Principal in Charge**

EDUCATION:

M.S., Urban Enrionmental Geology, University of Missouri at Kansas City
B.S., Geology, University of Missour at Kansas City
A.A., Haple Woods Community College

EXPERIENCE:

Hr. Rudy is a Registered Professional Geologist in Florida as well as a Certified Professional Geological Scientist (American Institute of Professional Geologists). Since mid-1988, he has been the manager of E & E's Tallahassee office, responsible for E & E operations in Florida and the southeastern United States. He has both led and participated in over 100 hydrogeologic investigations at hazardous waste, underground storage tank (UST), and other bulk storage facility sites nationwide. During these investigations, Hr. Rudy has managed geophysical surveys and developed ground water monitoring networks directed toward the physical'and chemical hydrogeologic characterization of aquifer systems.

As B & E's project director for major projects in the southeastern United States, Hr. Rudy has overall responsibility for study design, application of appropriate field and analytical techniques, resolution of technical problems, attainment of QA/QC objectives, and meeting of schedule/cost guidelines. He makes certain that client needs have been met by the technical teams assigned to each project, and provides E & E project managers with direct access to any additional, specialized, in-house expertise that may be needed during the course of a project.

As. principal in charge for E & E's major contract to provide petroleum product UST-related services to the Florida Department of Environmental Regulation (FDER), Hr. Rudy holds responsibility for all contractual issues as well as all technical work. This work is being conducted concurrently at multiple locations throughout Florida. As program manager for E & E's ongoing nationwide petroleum product assessment/environmental audit contract with Ryder Truck Rental, Inc., and hazardous waste site services contract with FDER, Hr. Rudy directs all work assignments, including those for contamination assessments (CAs), remedial investigations (RIs), feasibility studies (FSs), engineering design, and remedial construction services.

As project manager for the Petroleum Products Corporation Superfund Site RI/FS and Silvex Solvent Spill Site CA, he supervised characterization of soil and groundwater contamination, modelling of hydrogeologic conditions, and provision of information concerning available remedial technologies and associated costs. As project hydrogeologist for the Sapp Battery Superfund Site RI/FS, Hr. Rudy successfully developed the necessary data base required to support his subsequent modelling of contaminant migration in the highly complex karstic multi-aquifer system underlying the site.

[Bold items enclosed in brackets denote changes from original text]

JOHN D. BARKSDALE ·Project **Manager,** Field Services

EDUCATION:

M.S., Geology, Florida State University
B.A., Anthropology, University of Florida

EXPERIENCE:

Mr. Barksdale's experience includes the implementation of hydrogeologic investigations (surface/borehole geophysical surveys, monitoring well installation/development, and multimedia sampling); data analysis; and report preparation for underground storage tank (UST) and hazardous/ solid waste sites in the southeastern United States. Be has extensive experience in assessing geologic factors that affect the variability and distribution of hydraulic conductivities in the Floridan Aquifer.

Hr. Barksdale was project manager for E & E's investigations in Columbia, South Carolina, and Gadsden, Alabama, for the U.S. Army Corps of Engineers. These investigations required development of detailed quality assurance/quality control (QA/QC) plans and sampling/analysis work plans, as well as the implementation of rigorous QA/QC procedures during the actual sampling program. As project hydrogeologist for investigations to determine the extent of petroleum contamination from leaking USTs at trucking terminals in Miami, Florida; New Hope, Florida; and Bridgeport, Connecticut, Mr. Barksdale supervised monitoring well installation/development; performed pump, slug, and specific capacity tests to determine aquifer characteristics; and collected groundwater samples for quantitative analysis.

For the Northwest Florida Water Management District, Mr. Barksdale participated in the hydrogeologic investigation of 35 solid waste landfills. His work included site inspection, monitoring well sampling, and completion of a hydrogeologic assessment of the potential of each landfill to contaminate groundwater. He also assisted in a more intensive study of five landfills in Walton, Gulf, Okaloosa, Santa Rosa, and Washington counties to determine the extent of contamination and to evaluate various remedial options.

Mr. Barksdale directed a two-month groundwater tracer study in southern Leon County in a fractured karst aquifer setting, in order to determine the impacts of surface water recharge through a sinkhole on groundwater quality in the Floridan Aquifer. He conducted a multiwell aquifer test on the Floridan Aquifer in the vicinity of Quincy, Florida. In addition, Mr. Barksdale operated the District's borehole geophysical logging unit and designed/implemented an ambient groundwater monitoring network, which included the design/contracting for installation of monitoring wells, collection of geologic samples while drilling, performance of aquifer tests, and interpretation of geophysical logs and water quality data.

[Bold items enclosed in brackets denote changes from original text]

CYNTHIA A. STEMPNIAK **GC/MS Laboratory Supervisor**

EDUCATION:

B.A., Chemistry, State University College of New York at Buffalo
A.A.S., Chemical Technology, Erie Community College

EXPERIENCE:

Ms. Stempniak has 10 years' experience as an organic/analytical chemist. At B & E's Analytical Services Center, she is the gas chromatograph/mass spectrometer (GC/MS) supervisor. She provides daily supervision of GC/MS operators, assigns work, and reviews data. She has prepared and analyzed samples of water, soil, sludge, and oil for polychlorinated biphenyls, priority pollutants, volatiles, pesticides, and herbicides. She has analyzed chemical nutrients in water, tissue, and sediment samples.

As an organic/analytical chemist in Ohio, Ms. Stempniak conducted laboratory analyses for hazardous substances using gas chromatographs equipped with electron capture and flame ionization detectors. She performed biological feasibility studies and the biological portions of biodegradation feasibility studies. In addition, she trained laboratory personnel in analytical chemistry.

As a research chemist with the Great Lakes Laboratory in Buffalo, New York, Hs. Stempniak was responsible for the maintenance and operation of two autoanalyzer systems for the analysis of chemical nutrients in water, tissue, and sediment samples; as well as for supply ordering, inventory control, data interpretation, and computer programming of the analytical results. She also maintained and operated carbon analyzers and spectrophotometers; prepared, split, coded, inventoried, and distributed incoming samples; supervised "wet bench" analyses; and hired, trained, and supervised laboratory personnel. In addition, she set up and demonstrated laboratory classes for water and sewage treatment courses sponsored by the New York State Department of Environmental Conservation.

[Bold items enclosed in brackets denote changes from original text]

RICHARD R. SAMSON GC Section Supervisor

EDUCATION:

A.S., Natural Sciences, Allegheny Community College

EXPERIENCE:

Mr. Samson has nine years' experience as a laboratory analyst. At E & E's Analytical Services Center, he is responsible for gas chromatograph (GC) operations. His duties include staff supervision, review and verification of all GC analytical data, and method development. Mr. Samson's background includes the analysis of organics including polychlorinated biphenyls, pesticides, purgeable aromatics, and purgeable halocarbons using GC and liquid sample concentrator instrumentation.

As the assistant group leader of the extraction laboratory of a corporation in Pittsburgh, Pennsylvania, he supervised the preparation of all organic samples and assisted in the training of laboratory technicians in. techniques for both routine GC work and Superfund analysis. Involved instrumentation included GCs with packed and capillary columns and equipped with electron capture and flame ionization detectors, as well as volatile organic trap-and-purge equipment.

During. one year as a line technician with another laboratory in Pittsburgh, Mr. Samson participated in product assembly and packaging.

His additional training includes four years in the medical technology program of Alderson Broaddus College.

[Bold items enclosed in brackets denote changes from original text]

THOMAS E. FERNALLD **Microscopy Section Supervisor**

EDUCATION:

H.A., Geology, State University of New York at Binghamton
B.A., Geology, State University of New York at Binghamton

EXPERIENCE:

The asbestos analysis supervisor at E & E's Analytical Services Center, Mr. Fernalld has 14 years' experience in electron microbeam analysis and the examination of inorganic and geologic materials.

For five years, Hr. Fernalld was a geological research scientist with the research center of Amoco Production Company in Tulsa, Oklahoma. He supervised the installation of a stable isotope spectrometer, X-ray fluorescence spectrometer, and plasma emission spectrometer and provided software and hardware support for all three instruments. In addition, he initiated the purchase of, designed space modifications for, and coordinated the installation of an electron microprobe, subsequently adding an X-ray spectrometer to the microprobe to enable the analysis of beam-sensitive materials and to provide image acquisition and processing. He also developed digital semiquantitative compositional imaging techniques to enable the development of detailed elemental distribution information at a rate that was one-third faster than the rate required for mapping by quantitative point analysis.

For seven years, Hr. Fernalld was a scanning electron microscope (SEM)/microprobe technical specialist with the department of geological sciences at the State University of New York at Binghamton (SUNY/Binghamton). Responsible for the operation, routine maintenance, and minor repair of an SEH and electron microprobe, he obtained and modified the off-line ZAF data reduction program for electron microprobe results; installed an tested the CAMAC system for electron microprobe automations; and provided operating system support for a Digital Equipment Corporation LSI-11/2 microcomputer on the CAMAC system.

In addition, Mr. Pernalld worked for two years as a full-time research associate with SUNY/Binghamton, performing clay mineralogy and SEI4 studies of silicate mineral assemblages in marine evaporites.

His additional experience includes work as a computer programmer in the development of programs for the reduction of fluvial hydrologic data.

[Bold items enclosed in brackets denote *changes* from original *text]*

RICHARD J. NAGLER **Metals Section Supervisor**

EDUCATION:

B.A., Biology, Alfred University
A.A.S., Medical Laboratory Technology, State University of New York Agricultural and Technical College at Alfred

EXPERIENCE:

At E & E's Analytical Services Center, Mr. Nagler specializes in chemical analysis utilizing flame, flameless, and cold vapor atomic absorption (AA) and inductively coupled argon plasma (ICP) spectroscopy. He is experienced in the set-up and programming of both flame and graphite furnace autosamplers. He also has experience in the use of ultraviolet-visible and infrared spectrometers. His analyses to date have covered all priority pollutant and EP toxicity metals. His experience includes four years in the application of flame, flameless, and cold vapor atomic absorption spectroscopy methods.

In addition, Mr. Nagler has used United States Environmental Protection Agency methods for the digestion of soils, waters sludges, oils, air filters, and other matrices for analysis by use of atomic absorption spectrophotometers. Most analyses have involved samples of hazardous substances obtained from landfills and hazardous waste sites. Mr. Nagler also has conducted water testing for fluoride, biochemical oxygen demand, and total organic carbon.

In the field of product development, Mr. Nagler conducted extensive quality control testing on a newly developed time-release resin complex (dextromethorphan hydrobromide). He has received thorough training in all facets of analytical quality control and quality control testing as dictated by the United States Pharmocoepia and the regulations of good manufacturing practices.

[Bold items enclosed in brackets denote changes from original text]

DIETMAR F. P —— General Chemistry Section Supervisor

EDUCATION:

B.A., Chemistry, Andrews University

EXPERIENCE:

With 14 years of project-related experience, Hr. Piekarek is the supervisor of the general chemistry, microbiology, and asbestos laboratories at E & E's Analytical Services Center. His technical responsibilities encompass analyses for classical wet chemical parameters, oil and grease analysis by use of infrared spectrophotometry, and analyses of specific conductance. Hr. Piekarek also is responsible for analysis of duplicate and spike quality control samples, assurance of appropriate laboratory chain-of-custody and sample documentation, and method troubleshooting and problem resolution. He assigns all work undertaken by the wet chemistry, microbiological, and asbestos laboratories and is responsible for work scheduling, documentation, and supply inventory and procurement.

Mr. Piekarek has prepared chain-of-custody and other documentation to meet the Contract Laboratory Program (CLP) requirements of the United States Environmental Protection Agency (EPA). In addition to analytical laboratory support work under the Comprehensive Environmental Response, Compensation, and Liability Act, he has provided analytical services for Resource Conservation and Recovery Act; Toxic Substances Control Act; Federal Insecticide, Fungicide, and Rodenticide Act; and other programs. He performs routine quality control functions within the laboratory and is familiar with CLP data package functions and quality assurance requirements.

Hr. Piekarek worked for seven years as a chemist in Ashland, Kentucky, where he conducted water and wastewater testing using methods specified by EPA and the American Society for Testing and Materials. His analyses involved wet chemistry, titrimetry, instrumental analysis, distillation, and extraction for both organic and inorganic water quality parameters, including testing for polychlorinated biphenyls and similar analytes. In addition, he conducted microbiological testing of water.

For a coal company in West Virginia, Hr. Piekarek worked for four years in the laboratory analysis of mine water runoff using wet chemistry, titrimetry, and instrumental methods to determine water quality parameters. He devised analytical aids to provide for more effective analysis and trained laboratory technicians.

(Bold items enclosed in brackets denote changes from original text)

CARYN A. WOJTOWICZ Organics Section Group Manager

EDUCATION:

B.A., Biology, D'Youville College

EXPERIENCE:

Ms. Wojtowicz is E & E's organic chemistry analysis supervisor. She is responsible for E & E's gas chromatograph/mass spectrometer (GC/MS) operations and performs priority pollutant analyses of water, soil, and sediment samples in accordance with extraction and analytical procedures of the United States Environmental Protection Agency. She is experienced in the purge-and-trap technique for determining volatile organic compounds and is responsible for quality control and spectra interpretation for all of E & E's GC/MS projects. She has 15 years' experience operating GC/MS electron impact and chemical ionization instrumentation, as well as computer-automated data interpretation systems.

Ms. Wojtowicz held responsiblity for the priority pollutant analysis of samples obtained from the Vestal hazardous waste site in New York, wood-processing facilities in Illinois, and the Bridgeport hazardous waste site in New Jersey.

She performed analyses of water and sediment samples for United States Army Corps of Engineers dredging projects in Huron and Conneaut harbors, Ohio, to determine concentrations of polychlorinated biphenyls, total halogenated hydrocarbons, and other trace organics.

While working for the United States Food and Drug Administration (FDA), Ms. Wojtowicz analyzed pesticides residues and the heavy metals content of various foods. She performed various chemical extractions of animal tissues, with subsequent analysis using gas chromatography and atomic absorption. As part of her duties, she was responsible for the physical and chemical examination of food .and drug products to ascertain their quality and safety for consumption and use. She also ascertained the cleanliness and microbiological suitability of food and agricultural products. She is familiar with sampling and quality control procedures necessary to provide reliable public health data. She participated in extensive sample exchange programs with other regional FDA laboratories.

Ms. Wojtowicz has received additional training in atomic absorption spectrophotometry, high-performance liquid chromatography, and the interpretation of mass spectra.

[Bold items enclosed in brackets denote changes from original text]

BARBARA KRAJEWSKI Laboratory Deta Coordinator

EDUCATION:

B.A., Biology/Environmental Studies, State University of New York at Buffalo

EXPERIENCE:

Hs. Krajewski has been a quality assurance chemist at B & E's Analytical Services Center since 1985. Her primary responsibilities encompass coordination of all laboratory activities regulated by the United States Environmental Protection Agency (BPA) and New York State Department of Environmental Conservation Contract Laboratory programs, including compilation of data packages. She also coordinates all laboratory projects conducted for the states of Florida and Illinois, maintaining liaison between laboratory and field personnel and insuring that all requirements for data quality are met. For example, Hs. Krajewski was responsible for coordination of laboratory analytical work conducted for E & E projects at the Petroleum Products corporation site in Pembroke Park Florida; the Sapp Battery National Priorities List site in Marianna, Florida; and the Silvex site, a 32-acre silver-smelting facility in St. Augustine, Florida.

In addition, Ms. Krajewski participates in gas chromatograph/mass spectrometer (GC/MS) quality control activities.

She worked for six years as a GC/MS analyst and department supervisor with a research corporation in Western New York, where she was responsible for the operation of GC/MS systems in analyses for EPA priority pollutants and other trace organic compounds. Her duties included data compilation and review, preparation and submission of final reports, quality control, scheduling, instrument maintenance and operation, and training.

Ms. Krajewski is experienced in the performance of wet chemical analyses involving gravimetric, titrimetric, and colorimetric techniques.

[Bold items enclosed in brackets denote *changes* from original text]

LISA F. WARNEKE Laboratory Reports Coordinator

EDUCATION:

M.S., Geology, University of California at Los Angeles
B.S., Geology, University of California at Riverside

EXPERIENCE:

Ms. Warneke has eight years' experience in the operation of a wide range of instrumentation for the analysis and characterization of trace metals and inorganic and organic compounds. She is familiar with protocol of the United States Environmental Protection Agency (EPA) for the analysis of potable and nonpotable water. In addition, she is a specialist in the cataloging and quality control (QC) of analytical data.

Ms. Warneke is responsible for the reporting of analytical data generated by E & E's Analytical Services Center (ASC). She ensures that all data, including custodial and relevant QC information, are complete before they are reported. In addition, she tracks analytical sample lots from receipt at the ASC through final deposition. She also provides liaison, both between the ASC and clients and between the ASC staff and E & E technical project personnel.

After completing her master's degree in geology, Ms. Warneke spent five years as a research assistant at the University of Arizona. She was responsible for and successfully completed--on time and within cost constraints--commercial contracts and grants with annual budgets of $50,000 to $75,000. She operated, scheduled, and maintained state-of-the-art instrumentation including gas source and tandem accelerator mass spectrometers, gas chromatographs (GCs), and atomic absorption spectrometers (AAS). She supervised laboratory personnel in the performance of analyses and use of equipment. and operated a range of analytical equipment for the determination of trace metals and organic species in sediment and water. In addition, she designed and supervised the construction of a new research facility, including the evaluation, selection, and purchase of new equipment.

At the University of California at Los Angeles, Ms. Warneke used an electron microprobe, X-ray diffractometer, and polarizing light microscope in the execution of her graduate research.. For the geochemistry department, she prepared and extracted samples for inorganic analysis. She also demonstrated and taught laboratory techniques to undergraduate students. At the University of California at Riverside, Ms. Warneke analyzed trace metals, inorganics, and organics using AAS, X-ray fluorescence, X-ray diffractometer, and mass spectrometer (MS) instrumentation; and she cataloged and provided QC for sample analyses.

Ms. Warneke gained additional experience in geology as a field hydrologist in a joint project conducted by the United States Geological Survey and the University of California at Riverside. For this project, she collected and analyzed geothermal water samples and operated an MS.

[Bold items enclosed in brackets denote changes from original text]

GARY E. HAHN **Manager, Analytical Services Center**

EDUCATION:

B.S., Chemistry, State University of New York at Buffalo
A.A.S., Chemistry, Erie County Technical Institute

EXPERIENCE:

Hr. Hahn manages the daily operation of E & E's Analytical Services Center. The laboratory uses procedures approved by the United States Environmental Protection Agency (BPA) and New York State Department of Environmental Convervation (NYSDEC) and is approved by EPA and NYSDEC for the analysis of hazardous wastes associated with Superfund sites, as well as by the New York State Department of Health and the states of Florida, New Jersey, Illinois, and California for the analysis of drinking water and wastewater. Hr. Hahn's primary responsibility is to maintain the firm's state-of-the-art analytical capability. He directs all testing and analyses performed by the laboratory, including those involving air and water quality, solid waste classification and treatability, and biological impacts. He directs analyses of environmental samples for routine indicators of pollution as well as for specific pollutants such as pesticides, polychlorinated biphenyls (PCBs) and other toxic organics, and heavy metals. He has directed the evaluation of indoor, air pollution-related health problems in municipal buildings and private homes. He designed and equipped a complete environmental laboratory at Yanbu, Saudi Arabia.

Mr. Hahn has extensive experience in analytical method development and process troubleshooting, including gas and liquid chromatography; X-ray and mass spectrometry; infrared and atomic absorption and emission spectroscopy; and classical wet chemical methods of analysis. He is familiar with methods approved by the National Institute of Safety and Health for personnel monitoring and analysis, including procedures for testing for metals, solvents, gases, vapors, dusts, asbestos, pesticides, and other substances.

Hr. Hahn worked for 16 years in the chemical industry. His special assignments included the design of analytical laboratories for new chlor-alkali plants and the training of associated personnel, participation in a chemical inventory task force concerned with the Toxic Substances Control Act, and service as the chemical transportation coordinator for an emergency response team.

[Bold items enclosed in brackets denote changes from original text]

ANDREW P. CLIFTON Director, Analytical Services Center

EDUCATION:

B.S., Chemistry, cum laude, University of Sussex, Great Britain

EXPERIENCE:

As director of E & E's Analytical Services Center (ASC), Mr. Clifton has overall responsibility for the facility's operation as a multi-, functional, high-quality environmental laboratory. He directs a staff of over 40 professional chemists and ensures that the laboratory quality assurance/quality control (QA/QC) program, laboratory and field sample chain-of-custody documentation and reporting procedures, and laboratory safety protocol are continually reviewed to incorporate the most current methodologies.

Hr. Clifton was instrumental in attaining the ASC's participation in the United States Environmental Protection Agency Contract Laboratory Program for the organic analysis of Superfund site samples. For this contract, Mr. Clifton is responsible for maintaining the ASC's state-of-the-art capabilities in gas chromatograph/mass spectrometer (GC/MS) and GC/electron capture detection instrumentation, and for insuring that the laboratory produces data that will withstand scrutiny in administrative and judicial proceedings.

With 17 years' experience as an analytical chemist, Mr. Clifton has managed and performed analyses of environmental samples for routine indicators of pollution as well as for. specific pollutants such as pesticides, polychlorinated biphenyls and other toxic organics, and heavy metals. He was the manager of the environmental and analytical laboratory operated by E & E for the Royal Commission for Jubail and Yanbu at Madinat Yanbu Al-Sinaiyah, Saudi Arabia, where he was responsible for the analysis of seawater, groundwater, sanitary and industrial wastewater, and drinking water using atomic absorption, autoanalysis, GC/MS, and classical laboratory techniques. He conducted ambient air and upper air monitoring using state-of-the-art automatic air quality instrumentation and meteorological equipment. As laboratory manager, he provided QC and appropriate sample chain of custody, and he conducted and directed laboratory data computation and report preparation activities.. In addition to his laboratory duties, he assisted in the extensive underwater biological surveys conducted at Yanbu.

[Bold items enclosed in brackets denote changes from original text]

RUSSELL J. SHORT Assistant QA/QC Director

EDUCATION:

M.A., Marine Science, Virginia Institute of Marine Science of the College of William and Mary
B.S., Fisheries/Limnology, Michigan State University

EXPERIENCE:

Mr. Short has contributed to the development of E 6 E's QA/QC program for several years. As the firm's assistant QA/QC director, he provides a broad range of oversight functions for hazardous waste investigation/remediation projects and multidisciplinary environmental studies, including major, multisite, multiple task-order contracts with EPA, the United States Air Force, and state government agencies. The projects entail preliminary assessments, site inspections, RI/FSs, risk/endangerment assessments, and conceptual remedial design.

Hr. Short assists E & E project managers in problem identification/resolution; provides recommendations for corrective action; conducts QA/QC reviews of advanced technical procedures performed on-site; and provides QA/QC reviews for drilling, excavation, and sampling subcontractor work. He has supervised the development and impleaentation of QAPPs and RI/FS work plans, as well as the preparation of project delivcrables.

His responsibilities include independent review of project development and implementation through the application of E 6 E policies and procedures and coordination with client project officers to discuss any difficulties associated with project implementation. He has developed checklists for use during field and office audits to ensure that all project aspects are reviewed and compared with preset standards and guidelines. For field audits, Hr. Short reviews QAPPs and work plans to verify that approved procedures are being used, revievs personnel and assigned tasks for demonstrated proficiencies, and observes activity scheduling and logbook documentation. For office audits, he reviews the adequacy of project documentation and peer review of deliverables to ensure that these items result in high-quality work products.

Hr. Short has conducted such audits for field activities at Norton Air Force Base and the Operating Industries NPL site in California, the La-Salle Electrical Utilities NPL site in Illinois, and the Gramlich site in Arkansas. He personally has prepared or reviewed QAPPs for major hazardous waste sites including the Vestal and PPC NPL sites, Bridgeport Rental and Oil Services, Love Canal, MIDCO 2, Hid-South, and EnviroChem.

Hr. Short has also managed several major E 6 E remedial and field investigations of hazardous waste sites. In addition to the full range of technical responsibilities (planning, logistics, fieldwork, and data interpretation) required by the projects, he has monitored and directed the work of drilling and sampling subcontractors; has represented clients in meetings with federal, state, and local agency officials; and has presented the results of his work at public hearings.

[Bold items enclosed in brackets denote changes from original text]

JACK E. WILCOX, P.E. Project **Manager,** Engineering Services

EDUCATION:

B.S., Environmental Engineering, Purdue University

EXPERIENCE:

Mr. Wilcox leads E & E's engineering group, responsible for hazardous waste management, environmental engineering studies, and engineering design services. His projects have included design strategies addressing both surface and subsurface contamination and site closure plans. A registered Professional Engineer, he has evaluated hazardous material storage and handling operations at landfills, bulk storage tank areas, pesticide manufacturing facilities, and lagoons and has provided recommendations for regulatory compliance and corrective action. He led the development of E & E's Remedial Action Technology Management Information System (RATMIS) computer data base, which provides up-to-date information concerning the latest, state-of-the-art hazardous waste mitigation technologies. In addition, Mr. Wilcox provides quality assurance (QA) for specific projects.

Mr. Wilcox directed and provided QA for E & E's multimillion-dollar management contract with the Commonwealth of Pennsylvania to develop remedial action master plans and work plans for Superfund sites located throughout the state, procure contractors to implement initial remedial measures and perform remedial investigations/feasibility studies, and subsequently provide overall management of contractor activities.' For. the United States Army Corps of Engineers, Mr. Wilcox is E & E's project manager for a full-scale field reconnaissance, remedial design, and construction project at the National Priorities List site in Bridgeport, New Jersey, involving the single largest Superfund allocation to date, totalling over $55 million. The project entails the surface cleanup of over 90 tanks, process vessels, drums, and tank trucks; the cleanup and incineration of waste oils, waters, and sediments located in a 13-acre lagoon area; and long-term monitoring of local groundwater and surface water.

Mr. Wilcox directed E & E's multidisciplinary engineering team providing quality assurance at the Hyde Park landfill in Niagara Falls, New York. He reviewed and assisted in developing plans, specifications, and construction documents for treatment, storage, and disposal facilities, including a permanent leachate storage, separation, and transfer facility; an aqueous leachate treatment facility utilizing an activated carbon purification system; and a temporary on-site containment system. for nonaqueous-phase leachate. In addition, for the State of Florida, Mr. Wilcox managed E & E's feasibility study (including evaluation of over 50 technologies, risk analysis, conceptual design, cost-effectiveness analysis, and community relations) for the cleanup of the Whitehouse Oil Pits, a National Priorities List site containing polychlorinated biphenyls.

[Bold items enclosed in brackets denote changes from original text]

THOMAS B. YEATES **Quality Assurance Director**

EDUCATION:

BA, Chemistry, Illinois College

EXPERIENCE:

Mr. Yeates' 31-year background encompasses all facets of administration and quality assurance (On) for major hazardous waste investigation/remediation programs and analytical laboratory operations. At E 6 E, he leads the development, review, and approval of standard operating procedures affecting all data collection activities; direct8 the development of QA policies and procedures; and oversees the preparation, review, and approval of hazardous waste site QA project plans. Supported by an interdisciplinary staff of technical personnel, health and safety specialists, cost analysts, and contract specialists, Mr. Yeates reports directly to E & Es president. He leads independent field and office QA reviews/audits of project development/implementation and provides coordination with client project officers to discuss/resolve difficulties.

During nine years as deputydirector of the Region V Environmental Services Division of the United States Environmental Protection Agency (BPA) in Chicago, Mr. Yeates directed a multidisciplinary staff of 150 professionals that provided QA, environmental monitoring, data management/analysis, specialized technical support, and laboratory services. He also managed the $16.5-million Region V Superfund hazardous waste site field investigation team contract that involved the full-time participation of 60 engineers and scientists. He was a major contributor to the development of the performance-based (avard-fee) contractor evaluation system that vas implemented nationvide for BPA Superfund contractors. Be also participated EPA Headquarters task forces to address Superfund program issues and developed a planning and accountability system that resulted in better resource utilization and higher performance results for division personnel.

For three years with EPA's Management Division in Chicago, Mr. Yeates directed a staff of 99 professionals providing planning/evaluation, personnel, budgeting, automated data management, financial management, and purchasing support for the Region V staff of about 850 people. He also streamlined operations to' improve quality and maintain the division's level of service while enabling a 20% reduction in staff.

In addition, for three years, Mr. Yeates directed EPA's first Central Regional Laboratory in Region V, a state-of-the-art facility providing complete analytical services for environmental samples. He organized, staffed, and equipped the facility, motivating the 35 personnel to achieve program results that far surpassed upper-management expectations. Be oversaw the development of nev analytical methods that had agencyvide application. The laboratory received the Bronze Hedal Avard from the Regional Administrator, vas cited as a 'Center of Excellence," and became the model for other EPA regional laboratory facilities.

MARCIA L. MEREDITH Quality Assurance Officer

EDUCATION:

M.S., Analytical Chemistry, Indiana University
B.A., Chemistry, summa cum laude, Bowdoin College

EXPERIENCE:

Ms. Meredith, the leader of E & E's chemical group, provides independent quality assurance (QA) reviews of both field and analytical operations. She coordinates with project and laboratory management to establish data quality objectives and insure that project-specific goals are met; develops/reviews hazardous waste site QA project plans and insures that all QA documents are consistent with federal and state guidelines; reviews data validation reports and resolves discrepancies; reviews corrective actions with the project managers; and identifies final action items and areas of concern.

For the New York State Department of Environmental Conservation, Ms. Meredith is E & E's QA officer for the multisite Phase II investigations and for the remedial investigation/feasibility study for the Mead Property septage disposal site in Ulster County.

She is QA officer for E & E's contract with Region III of the United States Environmental Protection Agency (EPA) for the Superfund Alternative Remedial Contracts Strategy waste site investigation/remediation program. For several gas pipeline companies, she is QA officer for E & E investigations of polychlorinated biphenyls at compressor stations.

In addition, Ms. Meredith is E & E's laboratory project manager for all analytical work performed for the United States Navy and Air Force. She provides liaison between laboratory and field personnel to ensure that the collected data meet Navy and Air Force program requirements and objectives. She also coordinates and provides technical direction for special projects that require the development of new methodologies. She is a specialist in the interpretation of data obtained using gas chromatograph and gas chromatograph/mass spectrometer techniques.

As chief chemist with the QA team, Ms. Meredith reviews and interprets analytical data generated according to EPA and state Contract Laboratory Program (CLP) and solid waste protocol. She provides independent QA oversight for E & E's Analytical Services Center (ASC) and for analytical operations conducted in on-site laboratories. For on-site laboratories, she also assists in mobilization efforts, develops analytical screening protocol, and conducts QA audits.

KIMBERLY A. WALKER Quality Assurance Program Officer

EDUCATION:

B.S., Biological Sciences, Florida State University

EXPERIENCE:

Ms. Walker has led/participated in hazardous waste site investigations in Florida and across the country in support of government and private industry. She has worked in support of E & E's Remedial Field Investigation Team contract with the United States Environmental Protection Agency (EPA) and has prepared EPA site inspection reports and Hazard Ranking System site scores. She has led and conducted sampling of soil, sediment, surface water, and groundwater; soil-gas surveys and analyses; and air monitoring and sample field screening by use of portable instrumentation, including photoionization detectors and. organic vapor analyzers (OVAs) in gas chromatograph mode. She also monitors the work of on-site contractors to assure compliance with technical, budgetary, and scheduling stipulations.

As Quality Assurance Program Officer, Ms. Walker is responsible for reviewing and approving quality assurance plans and site-specific quality assurance project plans. She provides external review of field sampling activities, coordinates with the laboratory QA officer and the FDER QA officer, implements on-going training for technical staff, conducts field and office audits, and follows up on QC deficiencies.

During E & E's site screening investigation (SSI) contract with the Florida Department of Environmental Regulation (FDER), Ms. Walker was site manager for activities at the David Joseph Landfill, Collier Safe Company, High Acres Fertilizer, and the Eureka Springs Landfill. She led the work plan and cost proposal development, field implementation, data interpretation, and report preparation. For FDER, she also is E & E project manager for the USDA Experimental Station site in Palm Beach County, Florida. For this site Ms. Walker led the design of a sampling plan, developed a cost proposal, and led a field team in the implementation of the sampling plan in the field.

For E & E's remedial investigation of the Petroleum Products Corporation site in Miami, Florida, Ms. Walker was site safety officer and conducted OVA analyses, soil and groundwater sampling, and slug tests on monitoring wells. She also par'ticipated in E & E's investigation of gasoline leakage from underground storage tanks (USTs) at the K & K Grocery site in Holmes County, Florida. For this project, she assisted in the geophysical' surveys to locate abandoned, buried USTs and soil sampling to assess the lateral and vertical extent of soil contamination.

RAYMOND PICCIONE **Laboratory Quality Assurance Coordinator**

EDUCATION:

Ph.D., Inorganic Chemistry, Louisiana State University
B.S., Chemistry, State University of New York at Buffalo

EXPERIENCE:

Dr. Piccione coordinates the overall quality assurance (QA) program at E & E's Analytical Services Center (ASC). He conducts independent QA reviews of laboratory data and maintains/updates the ASC QA documents, standard operating procedures, and laboratory certification programs. He coordinates with laboratory management personnel and corporate QA staff to establish data quality objectives and ensure that project-specific goals are met; maintains laboratory QA plans and ensures that all QA documents are consistent with federal and state guidelines; reviews and resolves discrepancies; reviews corrective actions with the project managers; and identifies final action items and areas of concern. He also is responsible for overseeing quality control (QC) documentation throughout the ASC. As a member of the corporate QA staff, he conducts internal audits of the ASC, as well as external audits of outside laboratory services.

A specialist in the requirements of the United States Environmental Protection Agency (EPA) under its Contract Laboratory Program (CLP), Dr. Piccione also and assists in the preparation/review of inorganic CLP data packages.

As an analytical/QA chemist with EPA Region V in Chicago, Dr. Piccione analyzed environmental samples for inorganic contaminants by use of graphite furnace atomic absorption, inductively coupled argon plasma, and autoanalyzer methods. For two years, he was responsible for the review of data generated by CLP facilities and laboratories of potentially responsible parties, the evaluation of site-specific QA project plans, the development of recommendations/provision of assistance for project managers, and laboratory QA auditing.

For one year, Dr. Piccione was a QC chemist with Frontier Chemical Waste Process, Inc., in North Tonawanda, New York. Be directed incoming waste to appropriate holding tanks, analyzed samples, and conducted testing for final disposal.

During two years as a QC chemist with Buffalo Metal Finishing Company in Buffalo, New York, he analyzed and maintained electroplating, anodizing, and dye baths. With the same company, he also worked for one year as an electroplater involved in the plating or anodizing of various incoming metal pieces and the provision of troubleshooting/problem resolution for bath solutions.

0001415

APPENDIX D

ASC STAFF LIST

[Bold items enclosed in brackets denote changes from original text]

ASC STAFF LISTING

The following is a list of all ASC staff with a brief description of their duties. An asterisk (*) next to a name indicates that a brief biography can be found in Appendix A.

Deborah Andrasko	Gas chromatography analyst
Elle Anthony	Data entry clerk
Daniel Atherton	General chemistry analyst
Paul Azzopardi	General chemistry and microbiology analyst
Brian Benson	Assistant sample custodian
Seema Bhambani	General chemistry analyst
Joseph Bitka	Gas chromatography/mass spectrometry analyst
Tony Bogolin*	Project manager/customer service manager
Michael Burnett	Assistant sample custodian
Andrew Clifton*	ASC director
Lisa Ende	Asbestos analyst
Tor Fernalld*	Hicroscopy section supervisor
Dan Pournier	Asbestos analyst
Bob Ganger	Gas chromatography analyst
Tor Gardner-Clayson	General chemistry analyst
Francis Ginah	Gas chromatography analyst
Marnie Greenbie	Gas chromatography analyst
Gary Hahn*	ASC manager
Allen Hawker	Gas chromatography/mass spectrometry analyst
Lynn Hess	Gas chromatography/mass spectrometry analyst
Bill Howard	Chief sample custodian and computer systems manager
Debra Hutchinson	Sample preparation supervisor--organics
Marvin Ingalsbe	Gas chromatography/mass spectrometry analyst

[Bold items enclosed in brackets demote changes from original text]

Kathy Willy	Gas chromatography analyst
Barbara Krajewski*	Organic data specialist and project manager
Jack Marks	Sample preparation technician--organics
Rick Marsh	Sample custodian and second-shift supervisor
Marcia Meredith*	QA coordinator
Pete Mitchell	Gas chromatography/mass spectrometry analyst
Kathy Murphy	Asbestos airborne fiber analyst
Rich Nagler*	Metals section supervisor
Jim Olka	ICP analyst and spectroscopist
Lucy Owzcarek	Receptionist and office manager
Dietmar Piekarek*	General chemistry section supervisor
Hike Potter	Atomic spectroscopy analyst
Karen Ratajczak	Word processor and file clerk
Chester Romejko	Sample preparation technician--organics
Patricia Rosiek	Atomic spectroscopy analyst
Rick Samson*	Gas chromatography section supervisor
Mike Scanlon	Gas chromatography/mass spectrometry instrument specialist and data interpreter
Cindy Stempniak*	Gas chromatography/mass spectrometry supervisor
Terri Stoessel	Secretarial duties, accounting, and report preparation
Randy Von Smith	Laboratory computer specialist
Lisa Warneke*	Laboratory reports coordinator
Caryn Wojtowicz*	Organics section manager

[Bold items enclosed in brackets denote changes from original text]

APPENDIX E

ASC SAMPLE MANAGEMENT
STANDARD OPERATING
PROCEDURES (SOPS)

[Bold items enclosed in brackets denote *changes* from original text]

Title: Package Receipt
Category: SM.1
Prepared by: W. Howard
Review date: (02/07/90)

Cross Reference: SM.7
Approved by: (2/7/89)
(2/7/89)

OBJECTIVE

To provide guidelines for receiving a package in the Sample Management area.

REFERENCES

E & E Laboratory QA/QC Manual

PROCEDURE

1. Receiving

On the day a package containing samples is received at the laboratory, the sample custodian enters the following information into the Package Receipt Log:

Column	Data Entered
1.1 Item No.	Next sequential number
1.2 Client Name and/or Job No.	Client name or corp. proj. number
1.3 Date Received	Today's date
1.4 Received From	Package received from (i.e. Client, Federal Express, UPS)
1.5 Carrier ID No. or Initials **	Have person delivering package initial here
1.6 Shipping Invoice No.	Private carrier invoice no. (i.e., airbill number) or "None" if delivered by the client.
1.7 Package Description	Brief description of package
1.8 Package Received By*	Custodian's initials who completed parts 1.1 to 1.7

* If client is new get the client's billing address and client contact name and purchase order number.

** Some carriers, UPS in particular, will not sign or initial the Package Receipt Log. In this case, use a footnote and explanation to indicate that the carrier would not sign. Ensure that a sequential footnote number appears in the-fifth column for that entry and that all footnotes are initialed and dated.

0001418

2. Unpacking

The following is to be completed by or under the supervision of the custodian responsible for sample log-in.

Column	Data Entered
2.1 Package Secured	Check Yes or No
2.2 Manner Package Secured	If the package is secured by means other than those listed, indicate manner with a footnote.
2.3 Package Contents Received Cold	Open package. If contents require refrigeration check if contents are cold and then check yes or no. If "no" is checked, then fill out a discrepancy form.

STOP! The remainder of the Package Receipt Log must be completed by the custodian responsible for sample log in (see SM.2).

* Note: For the sake of consistency, the person signing the Chain-of-Custody Log (if it is external to a sealed package) should be the same person that fills out and signs the Package Receipt Log.

Title: Sample Log-in
Category: SM.2
Prepared by: W. Howard
Review date: (02/07/90)

Cross Reference: SM.1, QA/QC.1
Approved by: (2/7/89)
(2/7/89)

OBJECTIVE

To provide guidelines for logging in samples using Laboratory Management Information System (LABMIS).

REFERENCES

E & E Laboratory QA/QC Manual
E & E LABMIS Users Guide

EQUIPMENT AND REAGENTS

VAX Terminal
Barcode Printer
Line Printer

PROCEDURE

After samples have been received, the custodian responsible for sample log-in will complete the following steps to enter samples into LABMIS.

Unpacking

1.1 Unpack or supervise the unpacking of packages received at the ASC as outlined in sections 2.1 through 2.4 of the Package Receipt SOP (SM.1). Check the accuracy of all entries in the Package Receipt Log.

1.2 All samples should be lined up on the table in either alpha-numeric order, or in the order they are listed on the chain-of-custody. Verify that information on the chain-of-custody agrees with the samples received. Verify that the information on the traffic report agrees with the chain-fo-custody and the samples received. If there is a discrepancy, fill out a QA/QC discrepancy form (see SOP QA/QC.1).

Sample Log-in

2.1 Log in to the VAX (if you have a problem logging in to the VAX, refer to SOP Computer.1 VAX Log-in).

2.2 Select option [2] "Lab Production" from the "E & E Lab System Main Menu".

2.3 Enter your LABMIS password (this password will be given to you by your supervisor).

2.4 Select option [1] "Sample Management" from the "E & E Laboratory Management Information System" main menu.

2.5 Select option [1] "Sample Login" from the "Sample Management System" main menu.

2.6 Select the type of log-in you will use by the amount of information available. Select option [1] "Complete Login" if you know the tests to be assigned to each container. Select option [2] "Login of Samples up to Test" to login samples without tests. Options [3] "Login of Just Tests", and option [4] "Login of Test Abbreviations" can not be performed without option [2] being performed first (refer to LABMIS Users Guide for information on options [3] and [4]).

0001419

2.7 Enter your employee I.D. number.

2.8 Enter client abbreviation by locating the client name on the client abbreviation list. If the client cannot be found on the client abbreviation list, exit Sample Log-in, and add it as a new client (refer to the LABMIS Users Guide for information on adding a new client). Repeat steps 2.5 to 2.8.

2.9 Check client address to be sure correct client abbreviation has been entered. Enter (Y) or (N). If (N) check for correct abbreviation and re-enter client.

2.10 Enter job information as displayed on screen (refer to LABMIS Users Guide for specific information on job parameters).

2.11 Enter sample information as displayed on screen.

2.12 Enter container information as displayed on screen.

2.13 Enter all tests for the container. (Note: this screen will not appear when log in option [2] has been selected.)

2.14 Repeat steps 2.11 through 2.13 for all samples.

2.15 Select option [3] from the barcode menu to print barcodes.

2.16 Select option [2] from the reports menu to print reports. (Note: this screen will not appear if login option [2] has been selected.) Initial Sample Log and put in appropriate bin.

2.17 Log in is now complete. If you have more jobs with the same type of log in enter Y. If you have no more jobs to log in, or jobs for another type of login, enter (N) to exit (refer to the LABMIS Users Guide for assistance in exiting LABMIS).

Package Receipt Completion

3.1 After the job is logged in, check (Y) in the column marked "Sample Logged" and go to step 3.5.

3.2 If time does not allow for a job to be logged in, check (N) in the column marked "Sample Logged" (complete steps 3.3 and 3.4).

3.3 Enter the secure area where the package will be stored in the column marked "Temporary Secure Storage Area".

3.4 Affix a custody seal to the package, and place the package in the assigned secure area. Check (Y) in the column marked "ASC Custody Seal Affixed". Go to step 3.6.

3.5 Check (N) in the column marked "ASC Custody Seal Affixed".

3.6 Enter your initials in the column marked "Logged in By" (custodians initials).

International Specialists in the Environment

DATE: _____

SAMPLE CUSTODIAN SIGNATURE: _____

DOCUMENT CONTROL # _____

CIRCLE THE APPROPRIATE RESPONSE

00014200

1. Custody Seal — present/absent; intact/not intact
2. Chain-of-Custody — present/absent
3. Sample Tags — present/absent
   Sample Tag Numbers — listed/not listed on chain-of-custody
4. SMO Forms — present/absent

CASE NUMBER _____

AIRBILL NUMBER _____

DATE RECEIVED	TIME RECEIVED	CHAIN-OF-CUSTOOY RECORD NUMBER	SMO SAMPLE NUMBERS	CORRESPONDING		DOES INFORMATION ON CUSTODY RECORDS, TRAFFIC REPORTS, AND SAMPLE TAGS AGREE?	REMARKS: CONDITION OF SAMPLE SHIPMENT, ETC.
				SAMPLE TAG NUMBERS	ASSIGNED LAB NUMBERS		

Title: Custody Transfer
Category: SM.4
Prepared by: W. Howard
Review date: (02/07/90)

Cross Reference: Computer.1
Approved by: [illegible] (2/7/89)
[illegible] (2/7/89)

OBJECTIVE

To provide guidelines for the transfer of samples within the laboratory using the Laboratory Management Information System (LABMIS).

REFERENCES

E & E Laboratory QA/QC Manual
E & E LABMIS Users Guide

EQUIPMENT

VAX Terminal
Laser Scanner
Line Printer

PROCEDURE

After receipt of a sample request form, the custodian will complete the following steps to relinquish to or receive samples from laboratory analysts.

1. Sample Transfer

1.1 Log in to the VAX (see SOP Computer.1, VAX Log In).

1.2 Select option [2] Lab Production from the "E & E Lab System Main Menu".

1.3 Enter your LABMIS password (this password will be given to you by your supervisor).

1.4 Select option [4] Chain of Custody from the "E & E Laboratory Management Information System" main menu.

1.5 Select option [3] Custody Transfer from the "Chain of Custody" main menu.

1.6 Enter custody information as displayed on the screen. (For samples going out, the relinquisher will be the custodian and the receiver will be the analyst. For samples coming in, the relinquisher will be the analyst and the receiver will be the custodian.)

1.7 Select the type of transfer. (Option 2 should only be used for consumed containers being returned to sample management for proper disposal and samples going out that will be consumed in analysis, e.g. air tubes.)

1.8 Scan all sample barcodes using laser scanner. If scanner fails to read barcode, type in sample number as per screen instructions.

1.9 Press [Return] after last sample (for that type of transfer) has been scanned.

1.10 If the transaction involves more than one type of transfer, (e.g. 4 samples not consumed and 4 consumed samples) select the second type of transfer and scan samples as in section 1.8 and press [Return].

1.11 Enter (X) to end transaction and print transaction report.

1.12 Enter (Y) if you have more transactions to perform, (e.g transaction for another analyst, repeat steps 1.6 to 1.10) or (N) to exit (refer to the LABMIS Users Guide for assistance in exiting LABMIS).

1.13 Sign, and store printed transaction report in appropriate bin for future binding.

Title: **Security and Storage for ASC and Samples**
Category: SM.9 Cross Reference:
Prepared by: M. Meredith Approved by: (3/1/89)
Review date: (03/02/90) (3/3/89)

OBJECTIVE

To describe procedures for maintenance of laboratory and sample security; and storage of samples to prevent contamination.

REFERENCES

E & E's QA/QC Manual: "Laboratory and Field Personnel Chain-of-Custody Documentation and Quality Assurance/Quality Control Procedures Manual," July 1987, or subsequent revision.

PROCEDURE

Security

The Analytical Services Center is a secure facility. Entrance and egress is strictly controlled. Visitors are required to sign in and out and must be accompanied at all times in laboratory areas. During non-working hours, the facility is alarmed and equipped with state-of-the-art intrusion detection devices. Only a few designated personnel are issued keys for the building and security passwords.

Sample **Storage**

All samples and subsamples (i.e., digestatas or extracts) are stored in sample custody in the following designated areas:

- Secure Areas A and B - walk-in coolers at <4°C for original samples;
- Secure Area C - metal cabinets for metal digestates;
- Secure Area D - flammable material storage refrigerator for volatile sample vials;
- Secure Area E - flammable material storage refrigerator for extracts and solvent-type samples:
- Secure Area F - freezer for samples requiring storage at <0°C;
- Secure Area G - metal cabinet for asbestos samples only;
- Secure Area H - metal cabinet for storage of samples not requiring refrigeration.

Sample custody is a restricted *area* with keys distributed to custodial or supervisory staff only. A sample custodian will be on duty at all times the laboratory is open. Visitors will have access to the area through a lobby window and analysts will have access through a window in the working laboratory section.

All samples are kept under strict chain-of-custody as described in E & E's QA/QC Manual. Sample custodians will maintain all related records as described in SOPs SM.1-.4. Sample custodians will also maintain a temperature log of all storage areas and will issue a discrepancy form if at any time the areas are above 4°C.

In addition to maintaining chain-of-custody and secure areas, the following steps are taken to prevent sample contamination:

- All samples for volatile analysis are stored separately from extracts or solvent-type samples;
- All digestates or extracts are stored separately from original samples;
- Upon receipt, the integrity of all sample containers is verified.

Title: **Use of Discrepancy Form**
Category: QA/QC.1
Prepared by: M. Meredith
Review date: (1/25/90)

Cross Reference: GC/MS.2, .3
Metals.1, .2
GC.1, GAC.1

Approved by: (1/26/89)
(1/26/89)

OBJECTIVE

To provide guidelines for reporting out-of-control events, corrective action, and other QC-related problems with the QA/QC Discrepancy Form.

REFERENCE

QA/QC Manual
General QAPP

PROCEDURE

General Use

The QA/QC Discrepancy Form is a multi-purpose form designed to communicate QC problems and document corrective action. The form has three sections for completion of general information about the analysis and samples affected; explanation of the QC problem and corrective action; and description of any follow up action taken.

Complete the form in triplicate with white copy to the job file, green copy to the ASC manager, and canary copy to the QA coordinator. The person completing the report fills in the first two sections, and signs and dates on the space "Submitted By". The "Submitted To" space should be completed if:

- the form is being given to someone other than the ASC manager or QA coordinator; or
- a specific action is being requested of the ASC manager or QA coordinator.

For example, the supervisor may complete the form documenting a QC problem and give it to the reports writer indicating under "Corrective Action" that an explanation should be added to the case narrative. The white job file copy can be used for this purpose by simply including the copy with the data submitted to the reports group. In general, only the white job file copy should be used: Xeroxed copies of the discrepancy form should not be circulated, unless a copy is being submitted to someone other than those listed above. A person receiving the white job file copy should complete the corrective action or follow-up report section, initial and fill in the date closed, and return it to the job file.

If a further action is requested, the QA coordinator should follow up within two weeks to ensure action has been taken, fill in the follow up report and date closed on the coordinator's copy, and file in the general QA files. The QA coordinator and lab manager should sign and date the bottom of their copies when they review and approve the corrective action.

The form should also be used to document problems found during QA review. The QA reviewer should sign and date the bottom of form indicating the problem was found after the analysis was completed.

Analyst Use

The analyst should ensure all initial QC criteria for standards, knowns, and blanks are met before any samples are analyzed. The analyst must confer with the supervisor if he/she feels samples need to be run under out-of-control conditions. (Analysts must recognize that out-of-control conditions usually mean that analysis cannot proceed. However, in practice the supervisor may have to balance one need - for example, the requirement to run a sample within holding time - against the potential problems associated with running in an out-of-control situation.) A discrepancy form must be completed by the analyst or supervisor, copies given immediately to the ASC manager and QA coordinator, and copies put in job files of all samples involved.

The analyst should compare all data to method-specific QC criteria and mark all data "In-Control" or "Out-of-Control". If appropriate, the analyst should take immediate corrective action such as reanalysis of the sample within the same analytical batch. Any "Out-of-Control" data should be submitted immediately to the supervisor to schedule reanalysis or redigestion. If the supervisor feels the "Out-of-Control" data is acceptable, a discrepancy form must be submitted with the data. If the sample is reanalyzed within holding times, a discrepancy form does not have to be completed if the reanalysis is in-control.

Individual laboratory sections will identify the method-specific QC criteria which determines when data is "Out-of-Control". (See data review SOPs.) 'In some cases, the QC criteria will be client specific.

Sample Management Use

The sample custodian responsible for package receipt and sample log-in should complete a discrepancy form in the following cases:

- chain-of-custody documentation is not consistent with samples received;
- the samples were not preserved properly for the tests requested;
- the Lamples which require refrigeration were received warm;
- headspace was found in a vial designated for volatile analysis (should not be analyzed, if possible);
- a shipment was damaged or packed incorrectly.

In all the above instances, check the appropriate space on the discrepancy form and explain the corrective action taken. If other types of problems are found, check other and briefly explain the problem in the space provided. Give the completed form the the sample management supervisor for resolution and distribution.

ecology and environment, inc.

QA/QC DISCREPANCY

Laboratory Section _____ Date of Analysis _____

Type of Analysis _____ Book _____ Page _____

Job No.(s) _____

Sample(s) Affected _____

Submitted To _____ By _____

Date _____ Request Further Action ☐ YES* ☐ NO

*Complete Follow Up Report Within Two Weeks Date Closed _____

Standard	_____	Recovery	High	Low	Error in C-O-C	_____
Surrogate	_____	Recovery	High	Low	Incorrect Preservation	_____
Spike	_____	Recovery	High	Low	Samples Warm	_____
EPA Known	_____	Recovery	High	Low	Headspace in VOA Vial	_____
Replicate	_____	RPD Outside Limits			Damaged Shipment	_____
Lab Blank	_____	Contaminated With _____			Other	_____

Hold Time Violation _____ / _____ Days Run Outside Clock _____ / _____ Hrs.

Analytical Sequence Error _____ Insufficient QC Analyzed _____

Transcription Error _____ Calculation Error _____

Problem Explanation _____

Corrective Action _____

Follow Up Rapt _____

Corrective Action Approved: _____ Date _____

_____ Date _____

QA Review Completed _____ Date _____ Report Date _____

Distribution: Sheet 1 (White) — Job File
Sheet 2 (Green) — ASC Manager
Sheet 3 (Canary) — QA Coordinator

653019

recycled paper 0001423 ecology and environment

APPENDIX F

CHAIN-OF-CUSTODY FORMS

[Bold items enclosed in brackets denote changes from original text]

ecology and environment, inc.
195 SUGG ROAD, P.O. BOX D, BUFFALO, N.Y., 14225, TEL. 716-632-4491
International Specialists in the Environment

CHAIN-OF-CUSTODY RECORD

Project No.:	Project Name:	Project Manager:
Samplers: (Signatures)		Field Team Leader:

STATION NUMBER	DATE	TIME	SAMPLE TYPE COMP	SAMPLE TYPE GRAB	SAMPLE TYPE AIR	SAMPLE INFORMATION EXPECTED COMPOUNDS (Concentration)*	STATION LOCATION	NUMBER OF CONTAINERS	REMARKS

Relinquished By: (Signature)	Date/Time:	Received By: (Signature)	Relinquished By: (Signature)	Date/Time:	Received By: (Signature)	Ship Via:	
Relinquished By: (Signature)	Date/Time:	Received By: (Signature)	Relinquished By: (Signature)	Date/Time:	Received By: (Signature)	BL/Airbill Number:	Date:
Relinquished By: (Signature)	Date/Time:	Received For Laboratory By: (Signature)	Relinquished By: (Signature)	Date/Time:	Received For Laboratory By: (Signature)		

Distribution: Original Accompanies Shipment; Copy to Coordinator Field Files

*See CONCENTRATION RANGE on back of form.

234055

0001424

CUSTODY SEAL

Date: _____

Signature: EXAMPLE

ecology and environment, inc.

CUSTODY SEAL

Date: _____

Signature: EXAMPLE

ecology and environment, inc.

CUSTODY SEAL

ecology and environment, inc.

Job No: _____ Lab. No.: _____

Date: ____/____/____ pH: _____

Sample: EXAMPLE

Test tor:

Preserved with:

433015

SAMPLE CONTAINER LABEL

APPENDIX G

SAMPLE DATA REPORTING FORMAT

[Bold items enclosed in brackets denote changes from original text]

MEMORANDUM

To: John Barksdale

FROM: Gary Hahn

DATE: December 24; 1388

SUBJECT:

REF: U-9492, 631.001

CC: Lab File, QA/QC File

Attached is the laboratory report of the analysis conducted on seven samples received at the Analytical Services Center on November 16, 1988. Analysis was performed according to the procedures set forth in "Test Methods for Evaluating Solid Waste, Physical/Chemical Methods," Third Edition, U.S. EPA, 1986.

All samples on which this report is based will be retained by E & E for a period of 30 days from the date of this report, unless otherwise instructed by the client. If additional storage of samples is requested by the client, a storage fee of $1.00 per sample container per month will be charged for each sample, with such charges accruing until destruction of the samples is authorized by the client.

GH/geo-M2/A
Enclosure

0001426

ecology and environment, inc.

International Specialists in the Environment

LABORATORY REPORT

U-9492

Job No.:	U-9492, 631.001		RE:	UP-2000		
Sample Date:	11/15/88		P.O. No.:			
Date Received:	11/16/88		Sampled By:	E & E, Inc.		
Sample Type:	Water		Delivered By:	Federal Express		
E 6 E Lab. No. 88-	31452	31453	31454	31455	31456	31457
Customer No.	Gw-0I	Gw-02	Gw-03	GW-04	GW-12	GW-16
Sample Identity						
Arsenic	<0.005	(0.005	(0.005	<0.005	<0.005	(0.005
Barium	2.29	1.10	0.212	0.252	1.27	<0.010
Cadmium	0,013	0.01 1	<0.005	<0.005	0.012	<0.005
Chromium	0.195	0.238	0.035	0.023	0.292	(0.010
Iron	247	189	40.0	29.8	242	(0.025
Lead	0.066	0.194	0.013	0.028	0.202	<0.005
Manganese	11.5	1.87	1.18	1.32	2.10	<0.005
Mercury	<0.0002	<0.0002	(0.0002	<0.0002	<0.0002	t0.0002
Selenium	<0.005	<0.005	<0.005	(0.005	(0.005	<0.005
Silver	<0.010	<0.010	<0.010	<0.010	<0.010	(0.010
Sodium	8.12	6.66	54.3	136	7.06	0.145

Supervising Analyst: [illegible]

Date: 12/21/88

recycled paper

ecology and environment, inc.
International Specialists in the Environment

LABORATORY REPORT

Job No.: U-9492			RE: MP-2000			
Sample Date: 11/15/88			P.O. No.:			
Date Received: 11/16/88			Sampled By: E & E, Inc.			
Sample Type: Water			Delivered By: Federal Express			
E & E Lab. No. 88-	Method Blank					
Customer No.						
Sample Identity						
	Results In: mg/L unless noted					
Arsenic	<0.005					
Barium	<0.010					
Cadmium	<0.005					
Chromium	<0.010					
Iron	<0.025					
Lead	40.005					
Manganese	<0.005					
Mercury	<0.0002					
Selenium	<0.005					
Silver	<0.010					
Sodium	<0.100					

Supervising Analyst: Gary Hebert

Date: 12/21/88

recycled paper

QUALITY CONTROL FOR PRECISION
RESULTS OF ANALYSIS OF REPLICATE
ANALYSES OF WATER SAMPLES

U-9492.2

Parameter	E & E Laboratory No. 88-31457	(mg/L)		Relative Percent Difference (RPD)
		Original Analysis	Replicate Analysis	
Arsenic		<0.005	<0.005	--
Barium		<0.010	<0.010	--
Cadmium		<0.005	<0.005	--
Chromium		<0.010	<0.010	--
Iron		<0.025	<0.025	--
Lead		<0.005	<0.005	--
Manganese		<0.005	<0.005	--
Mercury		<0.0002	<0.0002	--
Selenium		<0.005	<0.005	--
Silver		<0.010	<0.010	--
Sodium		0.145	0.256	55

This data is within the control limits established in EPA Method 6010.

QUALITY CONTROL FOR ACCURACY: PERCENT RECOVERY
FOR SPIKED WATER SAMPLES

U-9492.3

Parameter	E & E Laboratory No. 88-31457	Original Value	Amount Added	kount Determined	Percent Recovery
		(mg/L)			
Arsenic		<0.005	0.04	0.037	92
Barium		<0.010	2.0	2.15	108
Cadmium		<0.005	0.05	0.057	114
Chraium		4.010	0.20	0.223	112
Iron		<0.025	1.0	1.14	14
Lead		<0.005	0.04	0.040	100
Manganese		<0.005	0.50	0.527	05
Mercury		<0.0002	0.004	0.004	00
Selenium		4.005	0.01	0.010	100
Silver		<0.010	0.05	0.052	104

This data Is withln tho control limits ostablished in EPA Method 6010.

ecology unci environment, inc.

International Specialists in the Environment

LABORATORY REPORT

U-9432.4

Job No.: U-9492			RE: MP-2000			
Sample Date: 11/15/80			P.O. No.:			
Date Received: 11/16/88			Sampled By: E & E, Inc.			
Sample Type: Water			Delivered By: Federal Express			
E & E Lab. No. 88-	31452	31453	31451	31455	31456	31457
Customer No.	OH-01	GW-02	Gw-03	GW-04	GW-12	GW-16
Sample Identity						
	Results In: mg/L unless noted					
Total Recoverable Petroleum Hydrocarbons	<1.0	<1.0	<1.0	<1.0	<1.0	<1.0

Supervising Analyst: Gary Hahn/mkw

Date: 12-27-88

recycled paper

ECOLOGY AH) ENVIRONMENT'S, INC.
ANALYTICAL SERVICES CENTER

RESULTS OF WATER ANALYSIS FOR
PRIORITY POLLUTANT PESTICIDES AND PCBs BY GC

(all results In ug/L)

	E & E Lab. No. 88-	31452	31453	31454	31455	31456	31457	Method Blank
Compound	Sample Identity	GW-01	GW-02	GW-03	GW-04	GW-12	GW-16	
Aldrin		4.023	4.01	4.01	<0.01	<0.01	4.01	<0.01
a-BHC		4.025	4.01	<0.01	<0.01	<0.01	<0.01	4.01
b-BHC		<0.025	<0.01	<0.01	<0.01	<0.01	<0.01	<0.01
g-BHC		<0.025	<0.01	<0.01	<0.01	<0.01	4.01	4.01
d-BHC		<0.025	<0.01	<0.01	<0.01	<0.01	<0.01	4.01
Chlordane		<0.40	<0.20	<0.20	<0.20	<0.20	a.20	<0.20
4,4'-DDD		<0.025	<0.01	<0.01	4.01	<0.01	<0.01	<0.01
4,4'-DDE		<0.025	<0.01	4.01	4.01	<0.01	<0.01	<0.01
4,4'-DDT		<0.025	<0.01	<0.01	<0.01	<0.01	4.01	<0[illegible]
Dieldrin		4.025	<0.01	<0.01	<0.01	<0.01	4.01	<0.01
Endosulfan I		<0.025	4.01	<0.01	4.01	<0.01	<0.01	<0.01
Endosulfan II		4.025	<0.01	<0.01	<0.01	<0.01	<0.01	<0.01
Endosulfan sulfate		<0.025	4.01	4.01	<0.01	<0.01	<0.01	<0.01
Endrin		<0.025	<0.01	<0.01	<0.01	<0.01	<0.01	<0.01
Endrin aldehyde		<0.025	a.01	4.01	4.01	<0.01	<0.01	4.01
Heptachlor		<0.025	4.01	<0.01	<0.01	<0.01	4.01	<0.01
Haptachlor' epoxide		<0.025	<0.01	<0.01	<0.01	<0.01	4.01	<0.01
PCB - 1016		<0.25	<0.10	<0.10	<0.10	<0.10	<0.10	4.10
PCB - 1221		<0.50	<0.20	<0.20	4.20	a.20	<0.20	4.20
PCB - 1232		<0.25	<0.10	<0.10	<0.10	(0.10	<0.10	<0.10
PCB - 1242		<0.25	4.10	4.10	<0.10	4.10	<0.10	<0.10
PCB - 1248		<0.25	<0.10	<0.10	<0.10	<0.10	<0.10	<0.10
PCD- 1254		<0.25	<0.10	<0.10	<0.10	<0.10	(0.10	<0.10
PCB - 1260		<0.25	067	<0.10	<0.10	0.60	<0.10	<0.10
Toxaphene		<0.50	4.50	<0.50	<0.50	<0.50	4.50	<0.50

0001429

QUALITY CONTROL FOR ACCURACY AND PRECISION:
PERCENT RECOVERY AND RELATIVE PERCENT DIFFERENCE
OF WATER MATRIX SPIKE (MS) AND MATRIX SPIKE DUPLICATE (MSD)
(Sample #31455)

U-9492.6

Compound	(ug/L) Original Result	Amount Added	Amount Determined MS	Amount Determined MSD	Percent Recovery MS	Percent Recovery MSD	RPD
Lindane	<0.01	0.20	0.32	0.35	80	88	9.0
Heptachlor	<0.01	0.20	0.31	0.35	78	80	12
Aldrin	<0.01	0.20	0.27	0.29	68	73	7.1
Dieldrin	<0.01	0.50	0.81	0.86	81	86	6.0
Endrin	<0.01	0.50	1.11	1.03	111	103	7.5
4,4'-DDT	(0.01	0.50	0.82	0.84	82	89	8.2

These recoveries and RPDs are within the acceptance limits of EPA Method 8080.

RESULTS OF WATER ANALYSIS FOR PRIORITY POLLUTANT
PURGEABLE ORGANIC COMPOUNDS AH) HSL COMPOUNDS BY GC/MS

(all results in ug/L)

U-9492.7

Compound	E 6 E lab. No. 88-	31452	31453	31454	31455	31456
	Sample Identity	GW-01	GW-02	GW-03	GU-04	Gv-12
chloromethane		<10	<10	<10	<10	<10
bromomethane		<10	<10	<10	<10	<10
vinyl chloride		<10	<10	<10	<10	<10
chloroethane		<10	<10	<10	<10	<10
methylene chloride		<5*	<5*	<5*	<5*	<5*
acetone		<10*	24	<10	<10*	<10
carbon disulfide		<5	<5	<5	<5	<5
1,1-dichloroethene		<5	<5	<5	<5	<5
1,1-dichloroethane		<5	<5	<5	<5	<5
trans-1,2-dichloroethene		<5	13	<5	<5	14
chloroform		<5	<5	<5	<5	<5
1,2-dichloroethane		<5	<5	<5	<5	<5
2-butanone		<10	<10	<10	<10	<10
1,1,1-trichloroethane		<5	<5	<5	<5	<5
carbon tetrachloride		<5	<5	<5	<5	<5
vinyl acetate		<10	<10	<10	<10	<10
bromodichloromethane		<5	<5	<5	<5	<5
1,2-dichloropropane		<5	<5	<5	<5	<5
trans-1,3-dichloropropene		<5	<5	<5	<5	<5
trichloroethone		<5	5	<5	<5	6
dibromochloromethane		<5	<5	<5	<5	<5
1,1,2-trichloroethane		<5	<5	<5	<5	<5
benzene		<5	<5	<5	<5	<5
cis-1,3-dichloropropene		<5	<5	<5	<5	<5
2-chloroethylvinyl ether		<10	<10	<10	<10	<10
bromofom		<5	<5	<5	<5	<5
4-methyl-2-pentanone		<10	<10	<10	<10	<10
2-hexanone		<10	<10	<10	<10	<10
tetrachloroethene		<5	<5	<5	<5	<5
1,1,2,2-tetrachloroethane		<5	<5	<5	<5	<5
toluene		<5	<5	<5	<5	<5
chlorobenzene		<5	<5	<5	<5	<5
ethylbenzene		5	<5	<5	<5	<5
styrene		<5	<5	<5	<5	<5
total xylenes		<5	<5	<5	<5	<5

*Compound present below measurable detection limit.

RESULTS OF WATER ANALYSIS FOR PRIORITY POLLUTANT
PURGEABLE ORGANIC COMPOUNDS AND HSL COMPOUNDS BY GC/MS

(all results in ug/L)

U-9492.8

Compound	E 6 E Lab. No. 88-	31457	31458	Method Blank		
	Sample Identity	GW-16	GW-22			
chloromethane		<10	<10	<10		
bromomethane		<10	<10	<10		
vinyl chloride		<10	<10	<10		
chloroethane		<10	<10	<10		
methylene chloride		<5*	<5*	<5*		
acetone		<10*	<10*	<10*		
carbon disulfide		<5	<5	<5		
1,1-dichloroethene		<5	<5	<5		
1,1-dichloroethane		<5	<5	<5		
trans-1,2-dichloroethene		<5	<5	<5		
chloroform		<5	<5	<5		
1,2-dichloroethane		<5	<5	<5		
2-butanone		<10	<10	<10		
1,1,1-trichloroethane		<5	<5	<5		
carbon tetrachloride		<5	<5	<5		
vinyl acetate		<10	<10	<10		
bromodichloromethane		<5	<5	<5		
1,2-dichloropropane		<5	<5	<5		
trans-1,3-dichloropropene		<5	<5	<5		
trichloroethene		<5	<5	<5		
dibromochloromethane		<5	<5	<5		
1,1,2-trichloroethane		<5	<5	<5		
benzene		<5	<5	<5		
cis-1,3-dichloropropene		<5	<5	<5		
2-chloroethylvinyl ether		<10	<10	<10		
bromoform		<5	<5	<5		
4-methyl-2-pentanone		<10	<10	<10		
2-hexanone		<10	<10	<10		
tetrachloroethene		<5	<5	<5		
1,1,2,2-tetrachloroethane		<5	<5	<5		
toluene		<5	<5	<5		
chlorobenzene		<5	<5	<5		
ethylbenzene		<5	<5	<5		
styrene		<5	<5	<5		
total xylenes		<5	<5	<5		

*Compound present below measurable detection limit.

QUALITY CONTROL FOR ACCURACY: PERCENT RECOVERY OF SURROGATE SPIKES

U-9492.9

Compound	E & E Laboratory No. 88-	Amount Added (ug/L)	Amount Determined (ug/L)	Percent Recovery
1,2-Dichloroethane-d4	31452	50	50	100
	31453	50	45	90
	31454	5n	49	98
	31455	50	48	96
	31456	50	45	90
	31457	50	43	06
	31458	50	41	82
Toluene-d8	31452	50	54	100
	31453	50	48	96
	31454	50	52	104
	31455	50	51	102
	31456	50	53	106
	31457	50	52	104
	31458	50	51	102
4-Bromofluorobenzene	31452	50	54	108
	31453	50	47	94
	31454	50	49	98
	31455	50	47	94
	31456	50	48	96
	31457	50	48	96
	31458	50	46	92

These recoveries are within the limits of EPA Method 8240.

0001431

QUALITY CONTROL FOR ACCURACY AND PRECISION:
PERCENT RECOVERY AM) RELATIVE PERCENT DIFFERENCE (RPD)
OF WATER MATRIX SPIKE (MS) AND MATRIX SPIKE DUPLICATE (MSD)
(Sample #31455)

U-9492.10

Compound	(ug/L)						RPD
	Original Result	Amount Added	Amount Determined		Percent Recovery		
			MS	MSD	MS	MSD	
1,1 -Dichloroethene	<5	50	34	33	68	66	3
Trichloroethene	<5	50	48	49	96	98	2
Chlorobenzene	<5	50	50	51	100	102	2
Toluene	<5	50	44	43	88	86	2
Benzene	<5	50	45	52	90	104	14*

With the exception of the one value flagged with an "*", these recoveries and RPDs are within the limits of EPA Method 8240.

(all results in ug/L)

U-9492.11

Compound	E & E Lab. No. 88-	31452	31453	31454**	31455	31456
	Sample Identity	GW-01	W-02	GW-03	W-04	GW-12
bis(2-chloroethyl)ether		<10	<10	<10	<10	<10
1,3-dichlorobenzene		<10	<10	<10	<10	<10
1,4-dichlorobenrene		<10	<10	<10	<10	<10
1,2-dichlorobenzene		<10	<10	<10	<10	<10
bis(2-chloroisopropyl)ether		<10	<10	<10	<10	<10
N-nitrosodipropylamine		<10	<10	<10	<10	<10
hexachloroethane		<10	<10	<10	<10	<10
nitrobenzene		<10	<10	<10	<10	<10
isophorone		<10	<10	<10	<10	<10
bis(2-chloroethoxy)methane		<10	<10	<10	<10	<10
1,2,4-trichlorobenzene		<10	<10	<10	<10	<10
naphthalene		<10	<10	<10	<10	<10
hexachlorobutadiene		<10	<10	<10	<10	<10
hexachlorocyclopentadiene		<10	<10	<10	<10	<10
2-chloronaphthalene		<10	<10	<10	<10	<10
dimethyl phthalate		<10	<10	<10	<10	<10
acenaphthylene		<10	<10	<10	<10	<10
fluorene		<10	<10	<10	<10	<10
acenaphthene		<10	<10	<10	<10	<10
2,4-dinitrotoluene		<10	<10	<10	<10	<10
2,6-dinitrotoluene		<10	<10	<10	<10	<10
diethylphthalate		<10	<10	<10	<10	<10
4-chlorophenyl phenyl ether		<10	<10	<10	<10	<10
N-nitrosodiphenylamine		<10	<10	<10	<10	<10
4-bromophenyl phenyl ether		<10	<10	<10	<10	<10
hexachlorobenzene		<10	<10	<10	<10	<10
phenanthrene		<10	<10	<10	<10	<10
anthracene		<10	<10	<10	<10	<10
di-n-butyl phthalate		<10	<10	<10	<10	<10
fluoranthene		<10	<10	<10	<10	<10
benzidine		<50	<50	<50	<50	<50
pyrene		<10	<10	<10	<10	<10
butyl benzyl phthalate		<10	<10	<10	<10	<10
3,3'-dichlorobenzidine		c20	<20	<20	<20	<20
benzo(a)anthracene		<10	<10	<10	<10	<10
bis(2-ethylhexyl)phthalate		<10	<10	<10	<10	<10*
chrysene		<10	<10	<10	<10	<10
di-n-octyl phthalate		<10	<10	<10	<10	<10
benzo(b)fluoranthene		<10	<10	<10	<10	<10
benzo(k)fluoranthene		<10	<10	<10	<10	<10
benzo(a)pyrene		<10	<10	<10	<10	<10
indeno(1,2,3-cd)pyrene		<10	<10	<10	<10	<10
dibenzo(a,h)anthracene		<10	<10	<10	<10	<10
benzo(ghi)perylene		<10	<10	<10	<10	<10

*Compound present below measurable detection limit.

ECOLOGY AND ENVIRONMENT'S, INC.

ANALYTICAL SERVICES CENTER

RESULTS OF WATER ANALYSIS FOR PRIORITY POLLUTANT
ACID EXTRACTABLE COMPOUNDS BY GC/MS

(all results in ug/L)

U-9492.12

Compound	E & E Lab. No. 88-	31452	31453	31454	31455	31456
	Sample Identity	GW-01	GW-02	GW-03	GW-04	GW-12
phenol		<10	<10	<10	<10	<10
2-chlorophenol		<10	<10	<10	<10	<10
2-nitrophenol		<10	<10	<10	<10	<10
2,4-dimethylphonol		<10	<10	<10	<10	<10
2,4-dichlorophenol		<10	<10	<10	<10	<10
4-chloro-3-methylphenol		<10	<10	<10	<10	<10
2,4,6-trichlorophenol		<10	<10	<10	<10	<10
2,4-dinitrophonol		<50	<50	<50	<50	<50
4-nitrophenol		<50	<50	<50	<50	<50
4,6-dinitro-2-methylphonol		<50	<50	<50	<50	<50
pentachlorophenol		<50	<50	<50	<50	<50

ECOLOGY ANI ENVIRONMENT'S, INC.
ANALYTICAL SERVICES CENTER

RESULTS OF WATER ANALYSIS FOR EXTRACTABLE HAZARDOUS SUBSTANCE LIST (HSL)† COMPOUNDS

(all results in ug/L)

Compound	E & E Lab. No. 80-	31452	31453	31454	31455	31456
	Sample Identity	GW-01	GW-02	GW-03	GW-04	GW-12
benzyl alcohol		<10	<10	<10	<10	<10
2-methylphenol		<10	<10	<10	<10	<10
4-methylphenol		<10	<10	<10	<10	<10
benzoic acid		<50	<50	<50	<50	<50
4-chloroaniline		<10	<10	<10	<10	<10
2-methylnaphthalene		<10	<10	<10	<10	<10
2,4,5-trichlorophenol		<50	<50	<50	<50	<50
2-nitroaniline		<50	<50	<50	<50	<50
3-nitroaniline		<50	<50	<50	<50	<50
dibenzofuran		<10	<10	<10	<10	<10
4-nitroaniline		<50	<50	<50	<50	<50

†In addition to the Priority Pollutant Compounds.

0001433

ECOLOGY AND ENVIRONMENTS, INC.
ANALYTICAL SERVICES CENTER

RESULTS OF WATER ANALYSIS FOR PRIORITY POLLUTANT
BASE/NEUTRAL EXTRACTABLE COMPOUNDS BY GC/MS

(all results in ug/L)

U-9492.14

Compound.	E & E Lab. No. 88-	31457	Method Blank 1	Method Blank 2		
	Sample Identity	GW-16				
bis(2-chloroethyl)ether		<10	<10	<10		
1,3-dichlorobenzene		<10	<10	<10		
1,4-dichlorobenzene		<10	<10	<10		
1,2-dichlorobenzene		<10	<10	<10		
bis(2-chloroisopropyl)ether		<10	<10	<10		
N-nitrosodipropylamine		<10	<10	<10		
hexachloroethane		<10	<10	<10		
nitrobenzene		<10	<10	<10		
isophorone		<10	<10	<10		
bis(2-chloroethoxy)methane		<10	<10	<10		
1,2,4-trichlorobenzene		<10	<10	<10		
naphthalene		<10	<10	<10		
hexachlorobutadiene		<10	<10	<10		
hexachlorocyclopentadiene		<10	<10	<10		
2-chloronaphthalene		<10	<10	<10		
dimethyl phthalate		<10	<10	<10		
acenaphthylene		<10	<10	<10		
fluorene		<10	<10	<10		
acenaphthene		<10	<10	<10		
2,4-dinitrotoluene		<10	<10	<10		
2,6-dinitrotoluene		<10	<10	<10		
diethylphthalate		<10	<10	<10		
4-chlorophenyl phenyl ether		<10	<10	<10		
N-nitrosodiphenylamine		<10	<10	<10		
4-bromophenyl phenyl ether		<10	<10	<10		
hexachlorobenzene		<10	<10	<10		
phenanthrene		<10	<10	<10		
anthracene		<10	<10	<10		
di-n-butyl phthalate		<10	<10	<10		
fluoranthene		<10	<10	<10		
benzidine		<50	<50	<50		
pyrene		<10	<10	<10		
butyl benzyl phthalate		<10	<10	<10		
3,3'-dichlorobenzidine		<20	<20	<20		
benzo(a)anthracene		<10	<10	<10		
bis(2-ethylhexyl)phthalate		<10	<10	<10*		
chrysene		<10	<10	<10		
di-n-octyl phthalate		<10	<10	<10		
benzo(b)fluoranthene		<10	<10	<10		
benzo(k)fluoranthene		<10	<10	<10		
benzo(a)pyrene		<10	<10	<10		
indeno(1,2,3-cd)pyrene		<10	<10	<10		
dibenzo(a,h)anthracene		<10	<10	<10		
benzo(ghi)perylene		<10	<10	<10		

*Compound present below measurable detection limit.

ECOLOGY AN) ENVIRONMENT'S, INC.

A N A L Y T I C A L S E R V I C E S C E N T E R

RESULTS OF WATER ANALYSIS FOR PRIORITY POLLUTANT
ACID EXTRACTABLE COMPOUNDS BY GC/MS

(all results in ug/L)

U-9492.15

Compound	E & E Lab. No. 88-	31457	Method Blank 1	Method Blank 2		
	Sample Identity	GW-16				
phenol		<10	<10	<10		
2-chlorophenol		<10	<10	<10		
2-nitrophonol		<10	<10	<10		
2,4-dimethylphenol		<10	<10	<10		
2,4-dichlorophenol		<10	<10	<10		
4-chloro-3-methylphenol		<10	<10	<10		
2,4,6-trichlorophenol		<10	<10	<10		
2,4-dinitrophenol		<50	<50	<50		
4-nitrophenol		<50	<50	<50		
4,6-dinitro-2-methylphenol		<50	<50	<50		
pentachlorophenol		<50	<50	<50		

ECOLOGY AND ENVIRONMENT'S, INC.

ANALYTICAL SERVICES CENTER

RESULTS OF WATER ANALYSIS FOR EXTRACTABLE HAZARDOUS SUBSTANCE LIST (HSL)† COMPOUNDS

(all results in ug/L)

U-9492.16

Compound	E & E Lab. No. 88-	31457	Method Blank 1	Method Blank 2		
	Sample Identity	GW-16				
benzyl alcohol		<10	<10	<10		
2-methylphenol		<10	<10	<10		
4-methylphenol		<10	<10	<10		
benzoic acid		<50	<50	<50		
4-chloroaniline		<10	<10	<10		
2-methylnaphthalene		<10	<10	<10		
2,4,5-trichlorophenol		<50	<50	<50		
2-nitroaniline		<50	<50	<50		
3-nitroaniline		<50	<50	<50		
dibenzofuran		<10	<10	<10		
1-nitroaniline		<50	<50	<50		

†In addition to the Priority Pollutant Compounds.

QUALITY CONTROL FOR ACCURACY: PERCENT RECOVERY OF SURROGATE SPIKES

0-9492.17

Compound	E & E laboratory No. 88-	Amount Added (ug/L)	Amount Determined (ug/L)	Percent Recovery
Nitrobenzene-d5	31452	100	63	63
	31453	100	50	50
	31454	100	83	83
	31455	100	61	61
	31456	100	58	58
	51457	100	65	65
2-Fluorobiphenyl	31452	100	61	61
	31453	100	45	45
	31454	100	74	74
	31455	100	58	58
	31456	100	60	60
	31457	100	67	67
Terphenyl-d14	31452	100	80	80
	31453	100	67	67
	31454	100	80	80
	31455	100	69	69
	31456	100	58	58
	31457	100	81	81

These recoveries are within the limits of EPA Method 8270.

QUALITY CONTROL FOR ACCURACY: PERCENT RECOVERY OF SURROGATE SPIKES

U-9492.18

Compound	E & E Laboratory No. 88-	Amount Added (ug/L)	Amount Determined (ug/L)	Percent Recovery
2-Fluorophenol	31452	200	77	39
	31453	200	72	36
	31454	200	147	74
	31455	200	97	49
	31456	200	109	55
	31457	200	122	61
Phcnol-d5	31452	200	56	28
	31453	200	54	27
	31454	200	118	59
	31455	200	60	30
	31456	200	66	33
	31457	200	77	39
2,4,6-Tribromophenol	31452	20	86	43
	31455	200	60	30
	31454	200	82	41
	31455	200	70	35
	31456	200	136	68
	31457	200	146	73

'hese recoveries are within tho limits of EPA Method 8270.

QUALITY CONTROL FOR ACCURACY AM) PRECISION:
PERCENT RECOVERY AND RELATIVE PERCENT DIFFERENCE
OF WATER MATRIX SPIKE (MS) AND MATRIX SPIKE DUPLICATE (MSD)
(Sample #31453)

U-9492.19

Compound	Original Result	Amount Added	Amount Determined		Percent Recovery		RPD
			MS	MSD	MS	MSD	
1,2,4-Trichlorobenzene	<10	100	77	88	77	88	13
Acenaphthene	<10	100	70	71	70	71	1
2,4-Dinitrotoluene	<10	100	96	101	96	101	5
Pyrene	<10	100	68	54	68	54	23
N-Nitroso-Di-n-propylamine	<10	100	110	119	110	119*	8
1,4-Dichlorobenzene	<10	100	69	78	69	78	12
Pentachlorophenol	<50	200	49	35	25	18	33
Phenol	<10	200	104	106	52	53	2
2-Chlorophenol	<10	200	135	138	68	69	1
4Chloro-3-methylphenol	<10	200	156	144	78	72	8
4-Nitrophenol	<50	200	111	46	35	23	41

With the exception of the one value flagged with an "*", these recoveries and RPDs are within the limits for EPA Method 8270.

ECOLOGY AND ENVIRONMENT, INC./ ANALYTICAL SERVICES CENTER DATE OF ANALYSIS SUMMARY

SAMPLE IDENTIFICATION	31452	31453	31454	31455	31456	31457	31458
PETROLEUM HYDROCARBONS	11/29/88	11/29/88	11/29/88	11/29/88	11/29/88	11/29/88	-----
ARSENIC	11/18/88	11/18/88	11/18/88	11/18/88	11/18/88	11/18/88	-----
BARIUM	11/18/88	11/18/88	11/18/88	11/18/88	11/18/88	11/18/88	-----
CADMIUM	11/18/88	11/18/88	11/18/88	11/18/88	11/18/88	11/18/88	-----
CHROMIUM	11/18/88	11/18/88	11/18/88	11/18/88	11/18/88	11/18/88	-----
IRON	11/18/88	11/18/88	11/18/88	11/18/88	11/18/88	11/18/88	-----
LEAD	11/21/88	11/21/88	11/21/88	11/21/88	11/21/88	11/21/88	-----
MANGANESE	11/18/88	11/18/88	11/18/88	11/18/88	11/18/88	11/18/88	-----
MERCURY	11/17/88	11/17/88	11/17/88	11/17/88	11/17/88	11/17/88	-----
SELENIUM	11/18/88	11/18/88	11/18/88	11/18/88	11/18/88	11/18/88	-----
SILVER	11/23/88	11/23/88	11/23/88	11/23/88	11/23/88	11/23/88	-----
SODIUM	11/18/88	11/18/88	11/18/88	11/18/88	11/18/88	11/18/88	-----
DIGESTION	11/17/88	11/17/88	11/17/88	11/17/88	11/17/88	11/17/88	-----
PESTICIDES/PCBS	11/21/88	11/21/88	11/21/88	11/21/88	11/21/88	11/21/88	-----
EXTRACTION	11/17/88	11/17/88	11/17/88	11/17/88	11/17/88	11/17/88	-----
VOLATILE ORGANICS	11/18/88	11/18/88	11/18/88	11/18/88	11/18/88	11/18/88	11/18/88
BNA'S	12/6/88	12/6/88	12/14/88	12/7/88	12/7/88	12/7/88	-----
EXTRACTION	11/17/88	11/17/88	12/7/88	11/17/88	11/17/88	11/17/88	-----

APPENDIX E

PROCUREMENT AND MATERIALS CONTROL

E & E'S ANALYTICAL SERVICES CENTER

[Bold items enclosed in brackets denote changes from original text]

8.1 DOCUMENTATION

Documentation for E & E's purchasing system consists of four basic steps/documents.

- o Purchase Requisition,
- o Purchase Order,
- o Vendor Invoice, and
- o Packing List.

H.1.1 Purpose of Documents

Purchase Requisition

The Purchase Requisition (PR) is the original document that initiates the purchase procedure. It is an internal communication document from the originator to the buyer. Its main purpose is to assist in avoiding errors or misunderstandings which my occur through verbal communication. The PR also helps in preventing duplicate ordering. It is suggested that the originator retain a carbon copy on file until the order is complete. Any PR retained may also become a reference to facilitate the completion of future PRs.

Purchase Order

The Purchase Order (PO) is the second document in the purchase process. Its purpose is to transform the PR into an order to an outside supplier to request shipment of specified items. The PO is the external communication document from the buyer to the supplier and again its main purpose is to assist in avoiding errors or misunderstandings which may occur through verbal transmittals. However, preordering by telephone, quoting a PO number, and then mailing the PO is acceptable in certain circumstances. The PO is a legal binding document and is categorized as a contract if the supplier returns an order confirmation.

Each buyer will be supplied with consecutively numbered PO sets by the Director of Administrative Services. Each PO number must be accounted for, even if it has been voided. The PO is a four-part snap form. Each copy is a different color in order to visually distinguish its purpose.

[Bold items enclosed in brackets denote changes from original text]

Vendor Invoice

The vendor invoice is the vendor's request for payment and includes an itemized list of the delivered merchandise. All vendor invoices must include the **PO** number.

H.1.2. Procedure for Completing Purchase Requisition (PR) and Purchase Order (PO)

When the buyer receives the PR, he will **do** the following:

1. Check **PR** for proper approvals. If one or both signatures are missing, he will return form to requisitioner. If material is required on a rush basis, he will obtain verbal approval and **so** note on the **PR.** The original **PR** should be sent to the proper approver for his/her signature and then be returned to the buyer. The buyer should keep a copy of each PR until the original is returned.

2. If price and vendor are not provided, the buyer will establish **a** vendor (by calling or writing) and enter the information on the PR.

3. If in #2 above the price exceeds the limits, the buyer will forward the **PR** to the proper superior for approval (see "Dollar Limit and Approval Schedule"). If it is a rush order, the buyer will call approver and obtain **a** verbal okay in order to begin completing the **PO**; then the buyer will return **PR** for approval.

4. Verify the account number and project or budget number. If none are stated, the buyer will enter them.

After completion of the PR, the buyer prepares a **PO.** The following list explains items/steps which must be checked and fulfilled by the buyer.

1. The company name must be the same on all POs.

2. The billing address is typed on the PO and is different for every zone.

3. PO numbers must follow in consecutive order. When a PO has been voided, all four parts must be filed in the number file.

4. "Ship To" can be different than the mailing address.

5. "Attention" is the name, department, or location of the receiver of goods.

6. **"To"** is the name and address of the supplier. The PO is designed to utilize a window envelope.

[Bold items enclosed in brackets denote changes from original text]

7. "Hailing Address" is the address of the buyer which must be typed. All invoices will be directed to this address.

8. Instructions to supplier, e.g., "Our order number must appear on all correspondence, invoices, packing lists, and packages," is imprinted on the PO.

9. PR # (if applicable), Date, Ship Via, P.O.B., Terms, Delivery Required, and Hail Invoices in Duplicate are self-explanatory.

10. Item #, Description, Quantity, Unit Price, and Total are copies from the PR or are obtained by the buyer.

11. If the items are sales tax exempt, the PO must be stamped accordingly and exempt number quoted.

After the PO is completed--all items above have been checked and fulfilled--the buyer signs the PO.

Distribution

To distribute the PO documentation, the buyer mails the original (white form) to the supplier. He forwards the pink copy to the receiver. The pink copy will become the Receiving Report. The buyer retains the green copy in an open vendor file together with the approved PR and files the yellow copy in a consecutive number file. The consecutive number file is also used to store any four-part voided POs. (All PO numbers must be accounted for in this file.)

H.2 RECEIVING OF ORDERED ITEMS

The Sample Management Group is responsible for receiving purchased goods at the laboratory. Prior to receiving goods, the receiver will have received the pink copy of the PO. This pink PO is filed according to date of promised delivery to provide a fast check of what is expected to arrive on a certain date and what is overdue. When the goods arrive, the receiver will pull the pink PO, check the goods against the order and the packing slip, check the PO number on the packing slip, and compare (make changes if required). The receiver stamps the pink PO, marks date received and whether shipment is partial or complete, signs his acceptance, attaches the packing slip and/or other shipping reports, and forwards these documents to the buyer. The receiver either delivers

[Bold items enclosed in brackets denote *changes* from original text]

0001439

the merchandise to the originator of the PR or places it in storage and notifies the originator of the PR of its arrival via the documentation.

- o If a partial shipment is received, then the receiver marks on the pink PO the particulars, prepares a copy, and mails the copy with the packing slip to the buyer. The pink PO remains on file until shipment is complete.

- o If a shipment is not accepted and is returned to the supplier, then the receiver marks the reason on the pink PO, makes a copy, and mails the copy to the buyer. The pink PO remains in the file until a new shipment arrives.

- o If goods are found to be faulty at a later date and all documents have already been sent to the buyer, the requisitioner communicates with the buyer asking for a request to return the merchandise to the supplier. The buyer will then attempt to stop payment if it has not already been made. The buyer will contact the supplier to return the merchandise and, if payment has been made, obtain a credit; a refund check, or replacement merchandise. The receiver either delivers the replacement/outstanding material(s) to the originator of the PR or places it in stock and notifies the originator of the PR of its arrival via a copy of the packing slip.

A buyer should create and maintain a vendor file which will provide up-to-date, reliable information regarding vendor performance.

H.3 QUALITY CONTROL OF ORDERED ITEMS

The originator of the PR is responsible for verifying the quality of purchased material and storing and using it in a manner that will not compromise its quality. The following specific requirements must be adhered to:

- o Analytical instruments must be installed without delay and checked against factory and method specifications. Instruments must be on line and running error-free for two weeks. At that time the section supervisor may approve payment.

- o All reagent containers must be labeled as follows:

  Date Received_____

  Date Opened_____

  Date Expires_____

[Bold items enclosed in brackets denote changes from original text]

The following guidelines should be used for expiration dates:

Standard solutions	-	30 days
Solvents	-	1 year
Hygroscopic or Oxidizable Salts	-	2 years
Other dry, free flowing salts, elements or compounds	-	10 years
Acids and bases	-	5 years

- o Analytical standards must be recorded in a standards log including lot number and source. Standards must be verified against a primary standard, standard reference material, or existing "in use" standard before use.

- o New chemicals must be entered into the master inventory, and material safety data sheets (MSDSs) must be incorporated into the compilation of MSDSs at the point of use and the central file.

- o Bulk chemicals such as solvents, acids, and sodium sulfate are dated on the case upon receipt and stored in a first-in/first-out manner in the chemical storage area.

- o Critical items such as solvents (e.g., acetone, hexane, and methylene chloride) and trace metals-grade acids (e.g., HCl, HNO_3, H_2SO_4) are pretested and purchased only from pre-approved vendors. Arrangements have been made with these vendors to sequester 6-month supplies of single lot materials to prevent variability in quality.

E4 RECEIVING OF INVOICES

The buyer, prior to receiving the invoices, should have received the receiving documents from the receiver. The buyer will file the receiving documents with the corresponding green PO and approved PR in the open vendor file mentioned previously. When the invoice arrives, the buyer will pull the green PO, the approved PR, and the receiving documents from the open vendor file and compare the invoice with the pink PO. If all compares satisfactorily, the buyer will stamp the invoice with information including account number, project number, price and extension, order complete, payment OK. The buyer then will fill in the information--account #, project or budget #--from the approved PR. Price and extension will be marked "okay;" order complete will be marked "yes." The PR and receiving documents are then attached to the original copy of the invoice and forwarded to Buffalo for payment. The buyer will then staple a copy of the invoice to the green PO and file these documents in a completed PO file by vendor's name.

(Bold items enclosed in brackets denote changes from original text]

H.5 DEVIATIONS

If the invoice covers a partial shipment, the buyer will run a copy of the PR and mark the green PO with the partial information. The buyer will then return both the green PO and the original PR to the open vendor file. Note that the receiving copy in a "Partial" invoice package is not pink but is a white, run-off copy, since the pink copy is still with the receiver.

[Bold items enclosed in brackets denote changes from original text]

APPENDIX I

TRAINING PROCEDURES

[Bold items **enclosed** in brackets denote changes from original text]

1.1 FIELD PERSONNEL

I.1.1 Basic Health and Safety Training

All new field personnel are required to successfully complete 40 hours of Basic Health and Safety Training.

The Basic Health and Safety Training course is an introduction to the need for and content of the special health surveillance monitoring program and to other health- and safety-related considerations such as respiratory protection, levels of safety equipment, composition of waste site entry teams, and decontamination of personnel and equipment. Bands-on training prepares field personnel to operate under a variety of environmental conditions; technical personnel participate in three days of hands-on training at a project site.

This training course, including the hands-on training, satisfies all Occupational Safety and Health Administration (OSHA) requirements. New employees also receive first-aid and cardiopulmonary resuscitation training in certified Red Cross classes and a one-week introduction to E & E policy and procedures. Additional training for nev employees is determined by the supervisor and varies with each employee, depending on their technical field, job responsibilities, and level of experience.

Descriptions of the health and safety training offered to E 6 E employees are included below.

Initial Health and Safety Training

Initial training is accomplished in a classroom setting where individuals gain a basic familiarity with:

- Standard operating procedures;
- Program policies and concepts;
- Respiratory protection;
- Protective equipment;
- Toxicology;
- Industrial hygiene considerations;
- Safety plan development;
- Remedial planning;
- Air characterization - hazard assessment;
- Field sampling;
- Chain-of-custody procedures;

0001442

[Bold items enclosed in brackets denote changes from original text]

- o Decontamination procedures;
- o Field investigation procedures; and
- o Emergency preparedness.

Following classroom training, all team members are to undertake a program of hands-on training in a field setting. The purpose of the field training is to:

- o Allow the employee to put theory into practice.
- o Help the employee gain confidence in him/herself as well as with the equipment and techniques upon which he/she must rely.
- o Build upon the "team" concept, which is essential during work in hazardous environments.

Refresher Health and Safety Training

Periodic refresher training is required of all team members to inform them of new techniques, policies, and procedures, as well as to provide a review of existing techniques. This periodic training helps further develop each member's proficiency and professionalism. Additionally, CPR and first-aid certification must be renewed, CPR on an annual basis and first-aid every three years.

Regional training coordinators maintain a training file for each member. The file is kept up-to-date and records all training sessions attended by individual team members.

I.1.2 Corporate Policies and Procedures Training

Corporate training involves classroom instruction during which individuals are oriented to E & E's structure, management, and operations. Technical employees receive introductory training in the following areas:

- o Project management;
- o E & E computer software;
- o Data validation;
- o Environmental chemistry;
- o Quality assurance and quality control (QA/QC);
- o Risk assessment;

[Bold items enclosed in brackets denote changes from original text]

- Equipment usage;
- Liability; and
- Environmental regulation.

In addition, employees may participate in an 8-hour Radiation Worker Training to allow them to work in radiation contaminated areas. Employees also receive hands-on training in work plan preparation, field sampling, sample packaging, and laboratory utilization.

1.1.3 Ongoing Technical Training

Technical training seminars are presented on a regular basis by technical personnel in their area of expertise. The purpose of these seminars are to provide up-to-date information on new techniques, policies, and procedures, as well as refreshing personnel on existing standard operating procedures. Seminar topics include, but are not limited to:

- Sample plan development;
- QA/QC requirements;
- Field activity logbooks;
- Analytical data interpretation;
- Well construction;
- Sample collection for all matrices;
- Sample management;
- Decontamination procedures; and
- Instrument calibration.

1.2 LABORATORY PERSONNEL

All new laboratory analysts/technicians are required to undergo training by the supervisor and/or senior analyst for their specific areas of expertise (e.g., organics, inorganics, GC/MS). This in-house training includes required instruction in E & E's Health and Safety Manual and the Laboratory and Field Personnel Chain-of-Custody Documentation and Quality Assurance/Quality Control Procedures Manual, as well as hands-on training in the use of approved analytical methodologies. All analysts undergo a training period vith an experienced analyst suited to their individual expertise. Analysts must successfully complete start-up criteria for an analytical method before they are allowed to work independently.

0001443

[Bold items enclosed in brackets denote changes from original text]

Laboratory personnel are encouraged to further their education in their areas of expertise. To facilitate this advancement, the company offers a tuition reimbursement program. In addition, attendance at training courses and seminars sponsored and run by equipment manufacturers and other is encouraged.

[Bold items enclosed in brackets denote changes from original text]

APPENDIX J

METEOROLOGICAL MEASUREMENTS

(SOURCE: EPA-600/4-82-060, FEBRUARY 1983)

[Bold items enclosed in brackets denote changes from original text]

United States
Environmental Protection
Agency

Environmental Monitoring Systems
Laboratory
Research Triangle Park NC 27711

Research and Development

EPA-600/4-82-060 Feb. 1983

EPA

Quality Assurance Handbook for Air Pollution Measurement Systems:

Volume IV. Meteorological Measurements

Peter L. Finkelstein, Daniel A. Mazzarella, Thomas J. Lockhart.
William J. King, and Joseph H. White

0001445

Table of Contents

Section	Page
Foreword	iii
Abstract	iv
List of Figures	viii
List of Tables	ix
1.0 Introduction	1
1.1 Organization	1
1.2 Implementation	1
2.0 Quality Assurance of the Measurement Process	2
2.1 Quality Assurance Program for Meteorological Measurements	2
2.1.1 Planning for a Quality Assurance Program	2
2.1.2 Operation and Management of a Quality Assurance Program	2
2.1.2.1 Systems and Performance Audits	3
2.1.2.2 Interpretation of Audit Results	3
2.1.3 Quality Assurance Program Reports	4
2.2 Quality Assurance Considerations Common to All Variables	4
2.2.1 Instrument Procurement	5
2.2.2 Acceptance Testing	5
2.2.3 Calibrations	5
2.2.4 Audits	6
2.2.5 Operational Checks and Preventive Maintenance	6
2.2.6 Preparation for Field Installation	6
2.3 Wind Measurements	6
2.3.1 System Description	6
2.3.1.1 Wind Sensor Characteristics	9
2.3.1.2 Wind Data Requirements	10
2.3.2 Procurement	10
2.3.3 Acceptance Testing	10
2.3.4 Calibration	11
2.3.5 Installation	12
2.3.6 Operation of a Wind Measuring System	13
2.3.7 Preventive Maintenance (PM)	13
2.3.8 Audit Procedures	13
2.4 Temperature Measurements	14
2.4.1 Introduction	14
2.4.1.1 Sensor Characteristics—Accuracy	14
2.4.1.2 Solar Radiation Shields.	15
2.4.1.3 Temperature Data Requirements	16
2.4.2 Procurement	16
2.4.3 Acceptance Testing	16
2.4.4 Calibration	16
2.4.5 Installation	17
2.4.6 Field Operation of a Thermometry System	17
2.4.7 Preventive Maintenance	17
2.4.8 Audit Procedures	17

Table of Contents
(continued)

Section		Page
25	Humidity/Dew Point Measurements	17
2.5.1	Introduction	17
2.5.1.1	Sensor Characteristics	19
2.5.1.2	Sensor Housings and Shields	19
25.1.3	Data Requirements	20
2.5.2	Procurement	20
2.5.3	Acceptance Testing	20
2.5.4	Calibration	20
2.5.5	Installation	21
2.5.6	Field Operation and Preventive Maintenance	21
2.5.7	Audit Procedures	21
2.6	Solar Radiation	21
2.6.1	Introduction	21
2.6.1.1	Instrument Characteristics	22
2.6.1.2	Recorders and Integrators for Pyranometers and Net Radiometers	22
2.6.2	Procurement	22
2.6.3	Acceptance Testing	23
2.6.4	Calibration	23
2.6.5	Installation	23
2.6.6	Field Operation of a Solar Radiation System	24
2.6.7	Preventive Maintenance	24
2.6.8	Audit Procedures	24
2.7	Precipitation Measurements	25
2.7.1	Introduction	25
2.7.1.1	Instrument Characteristics	26
2.7.1.2	Windshields and Heaters	26
2.7.1.3	Precipitation Data Requirements	27
2.7.2	Procurement	27
2.7.3	Acceptance Testing	27
2.7.4	Calibration	27
2.7.5	Installation	27
2.7.6	Field Operation of a Precipitation Measurement System	27
2.7.7	Preventive Maintenance	27
2.7.8	Audit Procedures	28
3.0	Methods for Judging Suitability of Sensor Siting	29
3.1	Introduction	29
3.2	Instrument Siting	29
3.2.1	Wind Speed and Direction	29
3.2.2	Temperature and Humidity	29
3.2.3	Radiation	29
3.2.4	Precipitation	30
3.2.5	Meteorological Towers	30
3.3	Station Siting	30

0001446

Table of Contents
(continued)

Section		Page
4.0	Meteorological Data Validation	32
4.1	Methods	32
4.2	Recommendations	33
5.0	Bibliography	36

Section 1.0
Introduction

Most air pollution control agencies have been measuring meteorological variables for as long as they have been measuring atmospheric contaminants. Wind speed, direction, and temperature are the usual measurements. For the most part, these data have been filed away and forgotten, to be retrieved occasionally to help track down the source of a noxious odor, for use in air pollution episodes, or the accidental spill of a toxic chemical.

Serious attempts to use the monitored meteorological information to help analyze air quality data or as input into a diffusion model are usually met with limited success. Upon inquiry into the status or quality of the data, one is frequently told such things as: "Oh, that station used to be O.K., but since we put it up in 1964 some trees have grown up around it." or 'Well, you can have that data if you want, but we don't know if it is any good—the propeller is still spinning so I suppose it's O.K." With uncertainties such as these, it is no wonder that the diffusion meteorologist turns so often to the nearest National Weather Service office for data. This is not meant as criticism of any air pollution control agency. For the most part, these agencies have been understaffed. underfunded, and overworked. Meteorological data have had a uniquely low spot on priority lists, if they were thought about at all. Federal agencies have also been lax in setting good examples of how to run meteorological quality assurance programs.

Recent events, however, have combined to bring about a needed change in this situation. Increased emphasis on models for decision-making has highlighted the need for better urban-scale meteorological data. Photochemical models, especially, have a need for a dense network of meteorological monitoring stations. Agencies have rapidly come to realize that they have a need for the meteorological data they have been gathering all along. In addition, the recently published "Ambient Monitoring Guidelines for Prevention of Significant Deterioration (PSD)" (USEPA, 1980) document requires new sources to monitor meteorological and atmospheric variables at many proposed sites for new industrial facilities in order to evaluate their air quality impact. Finally, a committee of the American Meteorological Society (Hanna, 1977) has recommended that dispersion parameters used in models should be measured directly on site rather than continue use of standard values from tables as has been done in the past.

In response to this growing interest in and need for higher quality meteorological data, various air quality monitoring groups have perceived the need for a formal quality assurance plan for the collection of meteorological data. This report addresses this need by suggesting a quality assurance program that will be useful for meteorological monitoring done in support of air pollution studies. It is hoped that such a program would benefit short- and long-term field measurement programs. Others in the meteorological monitoring business may also find it useful in the development of their own quality assurance programs.

1.1 Organization

This report is organized in three main parts. Section 2 discusses the meteorological measurement system. It reviews methods of measurement, procurement, maintenance and calibration from the perspective of quality assurance (QA). The practical advice comes principally from experience of the authors. The QA procedures follow the principles of the EPA Quality Assurance Handbook (USEPA, 1976).

Section 3 provides. guidance for judging the suitability of the siting of the various meteorological sensors. Where possible this guidance follows that of the World Meteorological Organization (WMO, 1971) although some changes are made since it is recognized that the goals of WMO's climatological program may not be the same as those of an air pollution control agency.

The final section (Section 4) reviews various approaches to data validation procedures and makes some recommendations for one example program. Both automatic and manual validation procedures are discussed. A mixture of both is suggested, but each monitoring group will have to evaluate its own situation before designing its procedures.

1.2 implementation

Before implementing a quality assurance program. an agency should try to evaluate the projected uses of the data it is gathering and the value of that data or, conversely, the cost of invalid data. This exercise should help in the budget decisions connected with the QA program.

As with any other new program. the implementation of a quality assurance program in a laboratory that did not previously have one will require an additional expenditure of resources. The adoption of a program on paper, without allowing for the additional manpower and money that are needed. will not result in substantial improvement in data quality. The challenge is-to develop a program that meets an agency's data needs and is cost-effective. This manual has been prepared to assist in achieving that goal.

Section 2.0
Quality Assurance of the Measurement Process

All too often the meteorological system is considered an infallible instrument or group of instruments that, once installed, yields accurate measurements until catastrophic failure, an easily recognized event, occurs. This is not true. Meteorological instrumentation requires calibration, preventive maintenance, and constant checking if the data acquired are to be accurate and complete.

This section provides guidelines for proper meteorological instrument operation to obtain good quality data. The variables discussed here are: wind speed, wind direction, temperature, humidity/dew point. precipitation. and total sky radiation.

For each instrument, selection and acceptance criteria (procurement), lab and field calibration procedures, recommended maintenance procedures, and audit procedures are presented.

Recommendations for the implementation and management of a quality assurance (QA) program for meteorological instrumentation are presented.

2.1 Quality Assurance Program for Meteorological Measurements

Quality assurance (QA) applied to environmental monitoring consists of both "the system of activities to provide a quality product" (traditional quality control) and "the system of activities to provide assurance that the quality control system is performing adequately" (traditional quality assurance). The first of these quality control (QC) functions consists of those activities performed by station operators directly on the instruments, e.g., preventive maintenance, calibrations. etc. These activities are described for each of the individual instruments in Sections 2.3 through 2.8. The purpose of the second set of activities is to manage the quality of the data and administer corrective actions as necessary to ensure that the data quality requirements are met. This section describes the planning, operation, and reporting of the quality assurance effort.

2.1.1 *Planning for a Quality* Assurance Program

A formal quality assurance program should be designed into the monitoring system so that provisions may be made in the system design for desired quality control checks and for better monitoring of system operations. If these activities are planned and provided for by incorporation of necessary readouts, calibration sources, etc., then they are more likely to be performed in a satisfactory manner.

The quality assurance activities necessary for a monitoring program we determined by the program data quality requirements which are, in turn, determined by the purpose for which the data are to be used. Consideration must also be given to possible future applications of the data.

The formal plans for quality assurance must be presented in a document called the QA Plan. This document lists all necessary quality-related procedures and the frequency with which they should be performed. Specific information to be included is described below:

Project personnel responsibilities: Responsibilities of personnel performing tasks that affect data quality.

Data reporting procedures: Brief description of how data are produced delineating functions performed during each step of the data processing sequence.

Data validation procedures: Detailed listing of criteria to be applied to data for testing their validity, how the validation process is to be carried out. and the treatment of data found to be questionable or invalid.

Audit procedures: Detailed description of what audits are to be performed. how often they are to be performed, and an audit procedure (referencing document procedures whenever possible). Also, description of internal and external systems audits including site inspections by supervisory personnel or others.

Calibration procedures: Detailed description of calibration techniques and frequency for each of the sensors or instruments being used. Both full calibrations and zero and span checks should be defined.

Preventive maintenance schedule: Detailed listing of specific preventive maintenance functions and the frequency at which they should be performed. Includes not only routine equipment inspection and wearable parts replacement but also functional tests to be performed on equipment.

Quality reports: Schedule and content of reports for submission to management describing status of quality assurance program.

More details on the requirements for a QA plan which is to be submitted to EPA me available in "Interim Guidelines and Specifications for Preparing Quality Assurance Project Plans." prepared by the Office of Monitoring Systems and Quality Assurance (1980).

2.1.2 *Operation and Management of a Quality* Assurance *Program*

The quality assurance program includes the implementation of all functions specified in the QA Plan. This implementation involves personnel at all levels of the organization. Technicians who operate equipment must perform preventive maintenance and QC checks on the measurements systems for which they are responsible. They must perform calibrations and, when required, participate in internal audits of stations run by other technicians. Their immediate supervisors should check to see that all specified QA tasks are performed, and should review logs and control charts to ensure that potential problems are corrected before significant data loss occurs.

The overall QA program responsibility lies with the person responsible for quality assurance. His responsibility includes the assessment of the quality of the data acquired, the preparation of QA status reports, and management of the quality assurance effort in a cost-effective manner. The quality assurance coordinator must track the implementation and effectiveness of the QA plan through reports from subordinates. personal communications. on-site inspections, and review of audit data. Data validation procedures also provide indications of degradations of data quality: however, these indications are not produced until data problems occur and data are being lost. It is more cost effective, considering the value of lost data, to implement adequate assessment and preventive measures to correct data quality problems before significant amounts of data are lost.

The audits—both performance and system—provide the manager with the best information for the quantitative and qualitative assessment of the status of the QA program. The following sections present considerations for the

0001448

performance of audits and evaluation of results.

2.1.2.1 Systems and Performance Audits-Systems and performance audits should be the most quantitative and unbiased measures of data quality available to the QA coordinator. The systems audit is an inspection of monitoring stations for indications of proper quality control procedures and adequacy of the instrumentation for making the desired measurement.

Inspections are made to determine:

- adequacy of recordkeeping
- level of preventive maintenance
- suitability of equipment used for calibration and operational checks
- adequacy of operating procedures

Systems audits should be performed at the beginning of a monitoring program shortly before data acquisition has begun and yearly thereafter. If data quality does not meet the requirements of the program, the systems audit should be performed more frequently.

System audits should ideally be performed by an im'panial group completely independent of the group operating the monitoring program. This is especially important if the audits are to be used to establish credibility for the measurements being taken (i.e., for demonstrating data quality to the agency requiring the measurements or for possible use in a court of law). If the systems audit is simply to function as an on-site inspection as part of the management review process, then it may be performed by the supervisor or manager responsible for the station operation.

Performance audits provide a quantitative indication of the accuracy of '.measurements being made by the physical verification of the instrument calibration. Suggested audit methods are described for each of the variables in Sections 2.3 through 2.8 and summarized in Table 2.1.1. Having independent investigators execute the audit applies also to performance audits.

2.1.2.2 Interpretation of Audit Results-The interpretation of audit results for meteorological instrumentation will necessarily be somewhat different from interpretation for ambient air monitoring instruments because of differences in the audit techniques. Air monitoring equipment is accessible because it is usually installed in air conditioned shelters with the sample drawn into the instrument through a tube. Calibrations or audits are performed by generating known concentrations of the monitored gas in a manifold and letting the instrument draw its sample from that manifold in the same manner in which it would draw the ambient air sample. The test conditions, therefore, accurately simulate the measured conditions with the measured quantity being carefully controlled.

Meteorological instrumentation. however, usually consists of a sensing element that must be located directly in the field being measured without altering that field. Producing a known field of meteorological variables at the monitoring site is exceedingly difficult, if not impossible. Once installed, the instrument may only be checked by generating an artificial field (e.g., spinning anemometer cups with a motor, orienting the wind vane toward aiming stakes, or submersion of a temperature sensor in a bath). Checks made in this manner do not detect or quantify coupling errors that occur at the sensor/air interface (slippage of cups in wind because of increased bearing friction, errors in indicated direction due to geometrical asymmetry of the vane, or effects of radiation on temperature measurements). The checks represent only a calibration of a portion of the system and, consequently, may not be routinely used to evaluate accuracy on the entire measurement system.

The instrument may also be checked by the technique of collocated sensors. in which the audit sensor is subject to the same air/sensor interface errors as the audited sensor. When audits of this type are conducted, the ambient field as measured by the audit device is assumed

Table 2.1.1. Summary of Performance Audit Methods for Common Meteorological Monitoring Instruments in the Field

	Audit method		
Variable	*Collocated transfer standard*	*Measurement system audit or calibration*	*Operational check*
Wind speed	*Anemometer with calibration related to NBS*	*Known rate of rotations driving sensor shaft. Starting torque measurement for threshold*	*Substitute known frequency or voltage*
Wind direction	*Wind vane with independent orientation*	*Alignment to orientation target and rotate in three or more known angular steps*	*Substitute known resistance for potentiometer type*
Sigma theta	*Calculate from direction samples*	*Calculate from direction samples*	*Substitute known amplitude and wave shape in frequency window*
Temperature	*Thermometer with calibration related to NBS in acceptable aspirated radiation shield*	*Compare with transfer standard at two or more temperatures in stable thermal masses. For differential temperature test zero difference at two temperatures*	*Substitute resistance or voltage for sensors*
Humidity	*Assmann psychrometer, cooled-mirror dewpointer*	*No practical field method Return for lab calibration*	*Substitute resistance for temperature*
Solar .radiation	*Calibrated pyranometer*	*Cover sensor for zero point. Return for lab calibration*	*Substitute millivolts or microvolts for sensor*
Precipitation	*Not applicable*	*Introduce known volume of water at rate about 1 inch/hour into known inlet area (tipping bucket) Use calibration weights (weighing gagel*	*Substitute event simulator (tipping bucketj or resistance (electric weighing gage)*

Table 2.1.2. *Recommended Tolerance Limits for Audit Results*

Variable[1]	Calibration via artificial field*	Collocated sensors**
Wind speed	±0.2 m/s	M.5m/s
Wind direction	±2°	±5°
Temperature	±0.25°C	±0.5°C
Temperature difference	±0.1°C	±0.2°C
Humidity/dew point	Return to manufacturer†	±1.5°C***
Total sky radiation	Return to manufacturer†	±5% Full scale (70 W/m²)
Precipitation	±.01"	±10% of reading

*Artificial field implies the simulation of the measured variable by artificial means (e.g., spinning anemometer cups by controlled speed motor).
**Sensors utilizing the same measurement technique operated in similar housings located adjacent to the audited sensor.
***Dependent on measurement technique; - some methods may be better.
†Or an impartial standards laboratory. See "A Directory of Standards Laboratories" by National Conference of Standards Laboratories, NBS. Boulder, CO 80303.
[1]10- to 20-minute averaging time when averaging is required.

to be the known field. Care must be taken when this method is used for calibration or audit purposes because the characteristics of the atmosphere are not controlled and unknown spatial and temporal variations may exist.

The audit data indicate the state of instrument calibration because most audit procedures verify the total system except for the air/sensor interface. It is possible for a system to receive a good audit report and still make poor measurements of meteorological conditions because of problems at the air/sensor interface or due to poor siting. However, this is not likely if good sensors are used and proper siting precautions are taken. To further minimize the chances of inaccurate measurements going unnoticed, performance audits should always be accompanied by inspections for potential problems that might cause the measured values to be unrepresentative of ambient conditions.

The calibration errors indicated by a performance audit should fall within the limits specified in the QA Plan. Table 2.1.2 lists suggested tolerance levels for each of the measurement techniques. Exact limits should be determined by monitoring program requirements. Any audit results falling outside these limits indicate a problem that should be rectified by normal maintenance procedures and followed by reauditing of the system. The audits are only checks and should not be used to determine calibration equation coefficients for the instrument or for other types of data correction or adjustment.

For meteorological measurement systems that are audited by the collocated instrument technique, two sets of data will result. These are the normal measured values and the data recorded from the audit system. If the monitoring system is properly calibrated and maintained, then the auditing system is susceptible to the same levels of errors as the monitoring system. To make a quantitative assessment of the audit data. two techniques are available; i.e., manual inspection and statistical evaluation:

Manual examination of audit vs. sample data for differences within acceptance limits.[1] Either instantaneous values or average values over the period of audit may be compared. Also, if a collocated test were run over a period sufficiently long that widely varying levels of the measured variable were encountered, then results of a regression between the audit and sample values will yield difference and bias information.

Statistical evaluation of audit results either from audits performed on multiple stations or multiple audits on a single station. Simple tests are described in the *QA Handbook*, Vol. I, Section G, which detect bias in system measurements through audit data taken over a network. These tests include the sign test and the paired t test. More complex tests are available.

2.1.3 *Quality Assurance Program Reports*

Periodically, the quality assurance coordinator should prepare a report for management describing the status of the quality assurance effort. This report should provide quantitative information on the quality of data, activities performed to improve data quality, and the cost of the QA efforts. Specifically, the report should cover:

- results of performance audits
- results of systems audits
- percentage of data reported
- cost of QA effort
- problems that degrade data quality and corrective action taken

[1]Note that acceptance limits consider not only the variations expected in the measurement system but also variations in the audit measurement system.

No general format exists that will serve for all quality reports. The exact contents will depend on the level of QA activity for the organization and the extent of the monitoring network. It is important that the document be clear and concise. Voluminous, highly detailed information should be summarized or, if necessary, placed in a separate appendix. Reports that are complex and difficult to comprehend will not effectively communicate their message.

2.2 Quality Assurance Considerations Common to All Variables

Two areas common to all systems must be considered. One is procedural including procurement specifications, acceptance testing, recordkeeping and reporting. The other is related to the hardware of the system including power supplies, recording systems. multiplexers, operating power source. and some cables

The amount of the contributions to the error of the common hardware pans of a measurement system depend on the type of system If the system is a digital logging system where voltages are provided by the signal conditioners of each sensor to a common muttiplexer, analog to digital (A to D) converter and digital recorder, the contribution of the system to. the error budget of the measurement is usually small A good quality A to D convener will be accurate to 0.1 percent of full scale Once converted, the digital handling should be error free except for the last digit uncertainty If the resolution of the digital data is also 0 1 percent of full scale or the least significant digit is properly rounded from such a resolution, the contribution to the measurement error is less than 0.2 percent Rounding in digital systems can cause an unacceptable bias when it is not done correctly This is easily checked by

0001449

looking at a frequency distribution of real data at the resolution of the recorded data. When auditing a system with a collocated transfer standard where synchronous measurement differences are examined, it is important to restrict the differences to those caused by the *measurement* system. To find any detectable bias from rounding, filtering or averaging which might be unexpected, examine the shape of the frequency distribution (not cumulative) for reasonableness. Other tests designed to challenge these functions of a digital data system may also be used. It is most important for the auditor of a digital system to be satisfied that the system works without bias by whatever method might be appropriate.

When the common part of the system is something like a multipoint recorder or a series of single-channel chart recorders, the error from the recording system may be as large or larger than the error from the rest of the measurement system for the variable. This error is tolerable if it is a backup recording. If it is the primary data source, recording error may be a serious problem; particularly if the application requires a high degree of accuracy.

The quality control effort common to all variebles must be documented from observations taken directly from the charts and logs maintained by the station operators and their supervisors. The following reports should be kept for the purpose of efficient station operation, and they can be a useful source for any good QA plan.

- ***Calibration Log.*** The calibration log contains detailed calibration information including date and time, name of person calibrating, calibration technique used, problems noted, sensor adjustments made, and calibration values and sensor responses (before and after adjustments).
- ***Operational fog.*** The operational log contains records of activities performed on the meteorological measuring system including preventive maintenance, repairs, inspections, and special test data not recorded elsewhere. Some test parameters should be maintained in the operational log on a regular basis to provide baseline information on proper operating conditions of the instrumentation. This information can be invaluable in troubleshooting once problems are noted by providing nominal operating values and the amount of expected variation in those values. Examples of data that should be recorded are readings associated with any test positions on the instrument, bridge excitation voltage (if accessible), and line voltage.

Not all quality assurance recording functions performed by the station operator are strictly for the purpose of furnishing information to management. Some of the recordkeeping functions enable the station operator to spot indications of potential problems before data are lost; e.g., the routine recording of operational values described above. Some data are subject to day-to-day variations and it is difficult to evaluate if individual values are within acceptable limits. Data of this nature are best recorded and plotted using control charts. Typical control charts include response to zero/span checks and digital versus strip chart readings.

2.2.1 *Instrument Procurement*

The function of QA in the procurement process is to verify the presence in purchase orders or contracts of performance specifications in unambiguous terms along with some indications of how verification tests will be conducted. The importance of this function is directly proponional to the importance of the instrument having the specified characteristics.

In choosing any meteorological instrument or array of instruments, the potential user should carefully evaluate his needs for data. Data requirements should be identified and a list made of suitable instrument configurations that meet these requirements. For most air pollution monitoring applications, meteorological instrument systems will be commercial. off-the-shelf items. The suitability of each instrument to perform in the anticipated field environment is evaluated by examining such characteristics as stability, linearity, response time, and durability.

Budget considerations may appear to eliminate certain candidates but should be carefully examined. Purchasing a meteorological instrument is more than a simple capital equipment outlay. A scientific instrument requires a certain amount of attention. Man-hours invested in data reduction, preventive maintenance, calibration and repair, and the value of lost data are real budget considerations. Maintenance records of candidate instruments should be checked because the time a component spends in the manufacturer's service department represents wasted resources and lost data. Generally it is best to purchase components from one manufacturer. Although it is possible to obtain sensors, bridge circuitry, housings and mounting apparatus from different sources, purchasing in this way splits responsibility, invites problems of component mismatching, and frequently results in delays. As a rule of thumb, a delivery schedule of approximately 3 months is reasonable for most meteorological instrumentation; 4 months is average.

2.2.2 *Acceptance Testing*

Never assume that the manufacturer has sent a complete, working instrument. Since warranties may expire in as short a period as 90 days, the instrument should be examined upon receipt, particularly if it is not slated for immediate deployment. Any damage to the shipping carton should be documented with the shipper. The instrument should then be unpacked and assembled according to the manufacturer's written instructions. Each component should be inspected for physical damage. Open access plates and inspect for loose connections and other visible effects. All cables should be checked for continuity. Bench test the instrument under controlled conditions. Using the operations and maintenance manuals, check as many performance specifications as possible. Document all acceptance testing and bring problems to the attention of the supplier or manufacturer immediately.

When an important performance 'characteristic is specified, it is prudent to verify that performance with an acceptance test. If it is a design feature (like overshoot or damping ratio on a wind vane), it can usually be verified by a test on a randomly selected sample of the units purchased. The cost of this type of documentation should be considered as a part of the cost of specification. If verification acceptance testing is not planned or budgeted, it should be understood that the specification becomes an expression of desire or expectation and it should be used to describe the data collected only with a footnote to qualify it as a manufacturer's claim or by reference to tests by others on the same kind of instrument.

2.2.3 *Calibrations*

The calibration of the part of the system common to all variables is usually a simple task and should be done initially in conjunction with the acceptance inspection and testing. It may require simply challenging the recording system with a voltage or current within the operating range and verifying that the output is within the accuracy specification. If the recording subsystem does not have a specific specification, these test results will define it. Of course, it must be smaller than the total measurement accuracy specification.

After this initial test, it is often unnecessary to repeat the test or calibration except in cases where

repairs or replacements are involved. That pan of the system common to all variables is usually included in the total system calibration or audit done for each variable and need not be considered as an independent subsystem.

2.2.4 *Audits*

The audit is an integral part of the quality assurance program for any field measurement exercise. To minimize bias, audits are usually performed by an independent investigator not administratively connected with the organization conducting the measurement program. The audit is similar in some respects to a field calibration check in that a major objective is to determine if the measurement system has retained its calibration. During an audit, however. no changes are ever made to the instrument or to the calibration coefficients.

The system audit is common to all variables and is described in Section 2.1.2. It involves an examination of all site logs and a review of instrument siting and installation, daily operating procedures, preventive maintenance (PM) activities. and calibration methods. A systems audit should be scheduled near the beginning of a measurement program.

The performance audit is specific to each variable and is discussed with each variable in the following paragraphs' of this section.

2.2.5 *Operational Checks and Preventive Maintenance*

To ensure the highest possible data quality, the user should establish a preventive maintenance routine and perform operational checks daily or as often as the site is visited. Except under extremely unusual circumstances, no piece of meteorological equipment should go unattended for more than 30 days. Some instruments, such as pyranometers, require daily attention to assure data quality. Operational checks include timing checks and adjustments, servicing the recorder needs, logging activities and observations, and cursory inspection of data for anomalous behavior. Preventive maintenance (PM) involves specified routine activities such as cleaning, tightening,. lubricating, and scheduled replacing of minor parts. The user should maintain a log of all PM and operations checks.

2.2.6 *Preparation for Field Installation*

Certain routine preparation is required before a meteorological sensor system is deployed. If the instrument is not newly purchased and has not recently been operating, it should be checked following the basic procedure used for acceptance testing (paragraph 22.2). The checkout is followed by bench calibration. after which it is desirable to set up the instrument in field configuration near the main laboratory for a shakedown period. If several instruments are involved, side-by-side comparisons can be made, strengthening the quality assurance program. The shakedown period.may vary in length but should at least verify that, the instrument is in good working order. Following shakedown. the system is dismantled and carefully packed for shipment to the field. A physical damage inspection should be made at the destination.

2.3 Wind Measurements

2.3.1 *System Description*

Wind measurements are of primary importance in studies of the diffusion and transport of atmospheric pollutants. These measurements include wind speed, wind direction, and turbulence or gustiness.

There are many wind-measuring systems commercially available. Some are ruggedly constructed, designed for a wide range of applications, and require minimum attention. The more delicate instruments, such as those used for measuring small-scale turbulence, can only be used during selected periods of favorable weather.

Almost any anemometer or wind vane will provide some information on wind characteristics. However, the quality of wind data depends directly upon how well the sensor is maintained and how well the measuring equipment functions as a system. Not only must the dynamic characteristics of the sensor match program data requirements, but the sensor must also interface without degradation of important performance characteristics with the total data acquisition system, which may include the transducer, signal conditioner, telemetry, data processor, and readout device.

Anemometers - A number of wind speed sensors operating on a variety of physical principles are available commercially. However, the rotational cup and propeller anemometers are the most commonly employed wind speed sensors. The more esoteric designs are generally used in very specialized studies.

Wind Vanes - Wind-direction-measuring sensors are operated by wind exerting pressure on a surface that rotates about a fulcrum. The standard vane measures only the horizontal wind direction, but the bidirectional vane is free to move through 360 degrees horizontally as well as ±50 degrees or more from the horizontal. The shape and design of the vane surface may vary with the manufacturer (Figure 2.3.1).

Combination Wind Sensors - Two types of sensors incorporate both

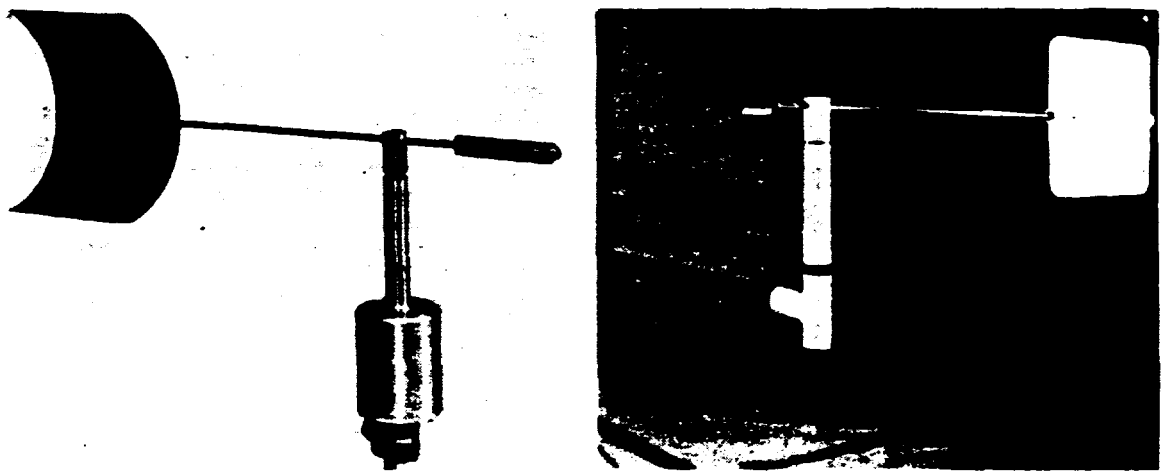

Figure 2.3.1. Typical wind vanes by Climet Instruments, Inc., (left) and R. M. Young Company (right).

0001450

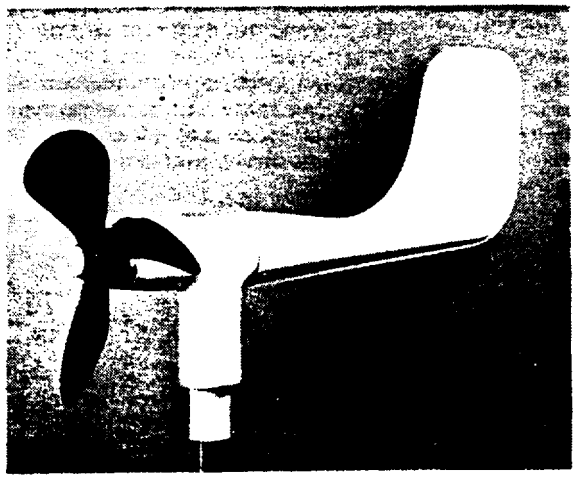

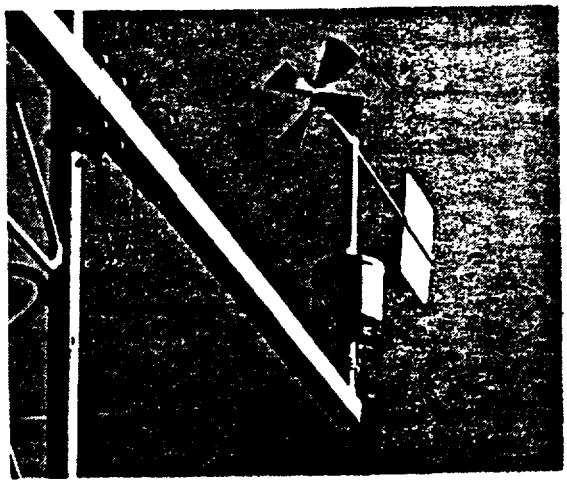

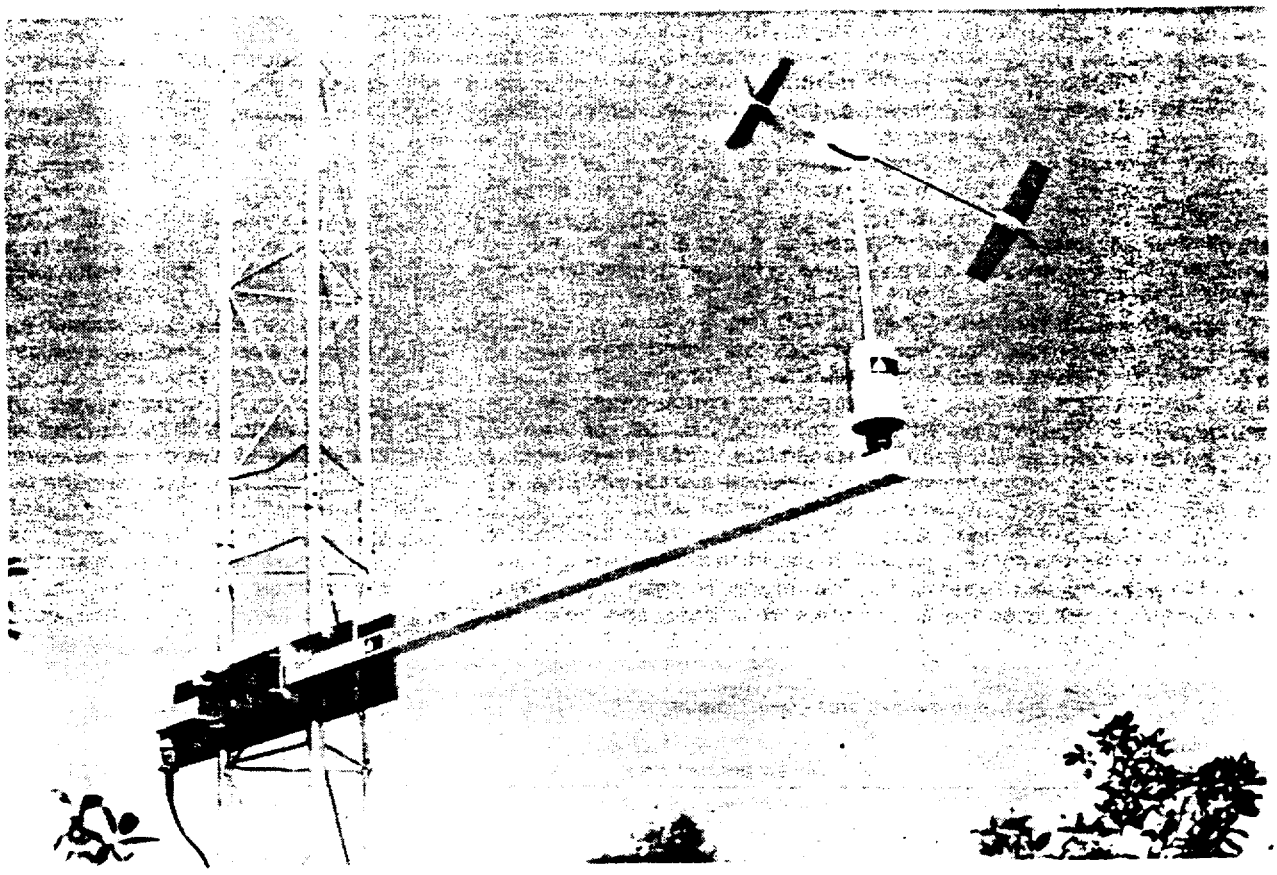

Figure 2.3.2. Propeller wind vanes by Bendix Frier Instrument Division (upper left), by R. M. Young Company (upper right) and by Meteorology Research. Inc. (lower).

direction and speed measuring capability in a single mechanical device. The propeller vane sensor measures two-dimensional flow (Figure 2.3.2). and the propeller bivane sensor measures three-dimensional flow.

Wind component anemometers can be used to determine the wind speed and direction(s), using simple trigonometry. These instruments include the x,y,z prop (often called u, v, w), the sonic, the vortex shedding, and the ion flow anemometers (see Table 2.3.1).

Transducers - Transducers convert the weather element measured by a sensor into an electrical or recordable signal. This discussion will be limited to transducers used in rotation-type wind speed sensors and vane-type direction sensors.

The rotary motion of cups and propellers is most often converted to a voltage or a frequency. Bath alternating-current generators and direct-current generators are used, but the latter are used more often. Frequency-type devices, sometimes called light choppers, have advantages in that they are almost frictionless, operate at lower wind speeds, and produce signals that can be transmitted without loss over long distances. Typically, this type of transducer is made to interrupt the lght of an LED (light-emitting diode) at a rate of 1 to 132 times for each rotation of the sensor. Units that interrupt the light once per revolution of the anemometer shaft are usually used to measure wind run thus producing longer time averages. A single sealed-in-glass switch, used in combination with a magnet on the shaft of the anemometer, is also a frequency-type transducer for wind speed or wind run. Another frequency-type device now used in anemometers is the Hall-effect generator which uses the electrical polarization of a conducting plate moving through a magnetic field. Mechanical anemometers with wiper-type contacts, still in use for climatological studies. are attractive because of their simplicity but are of limited use in pollution studies.

Wind direction transducers are of several basic types: wiper or sealed contact switches, single or double potentiometers, and DC or AC synchronous motors. Some of the most sophisticated transducers operate on the principle of capacitance with outputs in frequency form. Wire-wound and carbon-deposited potentiometers are used most frequently.

Signal Conditioners - In the most elementary electronic systems, the signal from the variable being measured is transmitted from transducer to signal conditioner to readout device. with power applied at some or all of these steps. The signal conditioner converts the transducer output into an electrical quantity suitable for the proper operation of the readout equipment. The signal conditioner may vary from a simple resistance network or impedance-matching device to an amplifier, an analog-to-digital converter, or, as in the case of the photoelectric speed transducer, a frequency-to-voltage converter. Devices that convert from 360 degrees to 540 degrees of wind direction and devices that provide "average" wind or wind with "time-weighted" average, are signal conditioners. Scalers that compress, expand, or change the transducer signal from electrical to engineering-equivalent units are also signal conditioners.

Readout Devices - Readout devices are classified as mechanical or electrical. Few of the mechanical, drum or disc drive recorders are now used for recording wind. Electrical recorders are (1) galvanometric, direct-writing, strip-chart type; (2) null-balance, servo-operated. (may be potentiometric). DC bridge, or force-balance servo type; (3) event or operations; (4) digital; and (5) other special types.

Direct writing (D'Arsonnal movement) galvanometric recorders with strip charts are used most frequently for wind measurements. They are used because of their reliability and their speed of response. The chart drive mechanisms are available as hand wound. spring driven, battery powered. or AC powered. It is important to select a recorder in which the damping characteristics of the galvanometer do not degrade the response of the sensor and are in compliance with the frequency response required in the study.

Most galvanometric recorders used for wind measurements are continuous curve-tracing recorders. The chopper-bar type. designed to make an imprint on pressure-sensitive paper each time the meter pointer is clamped against a sharp-edged platen. produces a record that is noncontinuous. Imprints are usually made every 2 seconds. so in rapidly varying winds the record appears very scattered. Some manufacturers of meteorological instruments supply a recorder with a built-in signal conditioner, that reduces the scatter through the use of either unspecified or selective time constants on the response of the galvanometer. This conditioner must be viewed critically if calculation of the standard deviation of the measurement is an objective in analyzing the record.

Potentiometric recorders, used frequently for wind measurement, may not have the rapid response characteristics of galvanometric recorders. As a null-balance device, the input impedance is

Table 2.3.1. *Types of Anemometers and Their Operating Principles*

Physical principle	*Anemometer type*	*Measurement*
Rotation	*Vane-oriented propeller*	*Horizontal speed*
	Bivane-oriented propeller	*Total speed*
	Fixed propellers	*Three-dimensional components on perpendicular axes*
	cups	*Horizontal speed*
Pressure	*Plate*	*Horizontal speed*
	Tube	*Horizontal speed*
	Bridled cups	*Horizontal speed*
Cooling	*Hot wire*	*Directional flow components*
	Hot thermopile	*Directional flow components*
	Hot film	*Directional flow cbmponents*
Sound	*Sonic*	*Directional flow components*
Vortex shedding	*Vane-oriented shape*	*Horizontal* speed
ion flow	*Transport*	*Horizontal speed*

0001451

very high when the stylus is at equilibrium, therefore errors due to electrical loading of the sensor output and errors due to voltage drops in long signal leads are minimized.

Multipoint potentiometric recorders, which sequence through a series of inputs or scheduled cycles, have no value in recording wind. Instantaneous samples of wind direction or wind speed once every few minutes are useless in most air pollution investigations. Curve-tracing potentiometric recorders are useful, and are available with charts that require ink or with inkless charts that operate with a heated stylus.

Digital systems are becoming more popular for logging and displaying wind data. They come in a wide range of designs and are usually elaborate systems that include analog to digital conversion, integration over specified intervals, and memory or 'storage capability. The output format of these systems should be compatible with the computer used for data processing.

2.3.1.1 Wind Sensor Characteristics- Cup anemometers, propeller anemometers, and wind vanes continue to be the best sensors for measuring wind speed and determining wind direction over a broad range of applications. Other types of sensors have unique characteristics for special projects or research. This discussion is limited to the characteristics of devices used most frequently in operational programs.

Cup ***anemometers*** are complex shapes where the net torque (lift greater than drag) causes a rate of rotation roughly proportional to wind speed. They respond to any horizontal wind direction which is an advantage but they are also responsive to the vertical component of the wind. In turbulent flow, the output (average speed) may be closer to the total speed than to the presumed horizontal component (MacCready, 1966).

The design of the anemometer cup assembly and the material from which it is constructed are important in determining durability, linearity, starting threshold, and dynamic response of the instrument. Three conical cups give better performance than hemispherical cups (Figure 2.3.3) and are preferred Over the older four-cup design. The ratio between cup diameter and cup wheel diameter influences the calibration curve (Gill, 1973). Starting threshold is defined as the lowest wind speed at which the rotating cups meet the accuracy specification (Lockhart, 1970).

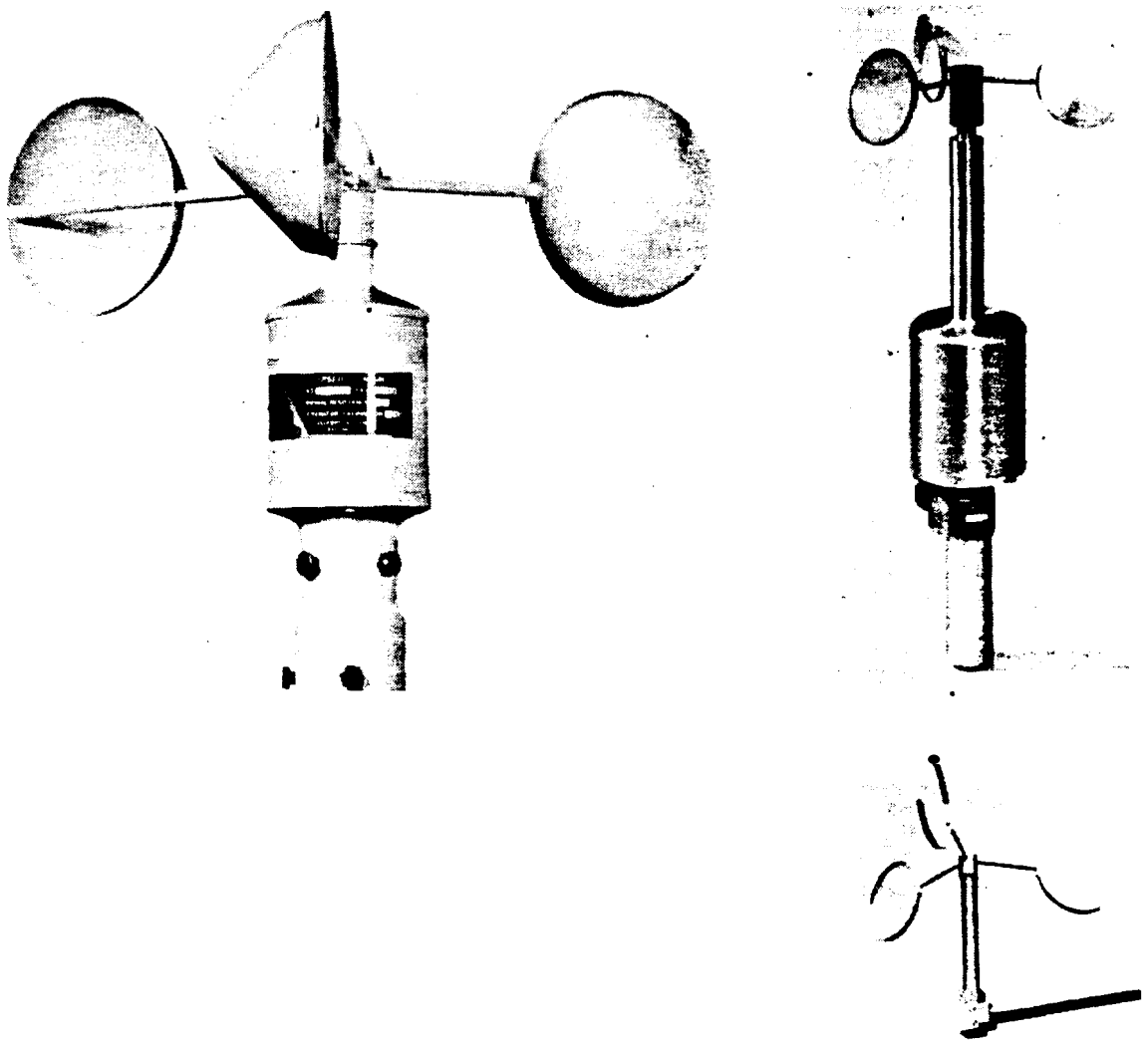

***Figure* 2.3.3.** *Typical three-cup anemometers featuring conical cups. Manufacturers are Belfort Instrument Company (upper left). Climet Instruments, Inc. (upper right) and C. W. Thornthwaite Associates (lower)*

In order to define the smallest eddy size to which cups will be responsive, a dynamic characteristic known as the distance constant must be known. This is determined in a wind tunnel by measuring the time for the cups to reach 63 percent of the tunnel speed after being released from a nonrotating condition. The distance constant in meters may be expressed as a time constant in seconds at a given wind speed by dividing by that wind speed in meters per second.

Propeller anemometers. especially helicoid types, are primary sensors with rotation rates linearly proportional to the wind speed over a wide speed range (Gill, 1973). Propeller anemometers must be oriented into the wind. The error from the failure of the vane to perfectly orient the propeller is small since propellers have a nearly cosine response; i.e., the propeller turns at a rate almost directly proportional to the wind component parallel to its axis. Like the cup anemometer, the propeller anemometer is a first-order, nonoscillatory system ,whose dynamic characteristics can be described by the distance constant referenced above.

Fixed axis ***propeller anemometers*** are designed to measure two or three components of wind simultaneously at a point in space. They represent a special type of propeller anemometer for the direct measurement of turbulence (Gill, 19751. Three helicoid anemometers in an orthogonal array measure the wind for the axes U-V-W. Each propeller turns at a rate almost proportional to the 'wind component parallel to its axis. Cosine response, although not yet perfected, is critical in this equipment: but this device does not have the static balance limitations of the bivane (a two axis wind vane). which is also used for turbulence measurements. Under conditions of rain, snow, and heavy dew, the bivane imbalance may produce unacceptable errors.

Wind 'vanes have a damped and oscillatory motion. This characteristic second-order response is the result of such factors as weight of materials, shape and size of vane, and location and weight of counter-balance. One indication of the performance of a vane is the starting threshold. As described by Finkektein **(1981).** this is the lowest speed at which a vane released from a position 10 degrees off the centerline in a wind tunnel moves to within 5 degrees of center.

There are several dynamic characteristics. identifiable as constants. that can be used to define the performance of a wind vane (MacCready, **1965,** and Wieringa. **1967)** in response to a step function. These include damping ratio, damped wavelength, undamped wavelength, and delay distance. Undamped wavelength is used in determining the dynamic response of a wind vane to sinusoidal wind direction fluctuations.

Damping ratio is a constant that is dimensionless and independent of wind ***speed.*** It is calculated from the relative amount of overshoot on each of two successive half cycles of a decaying oscillation. If the ratio of two successive swings is designated as Ω, then the damping ratio ζ is calculated from the equation:

$$\zeta = \frac{\ln \frac{1}{\Omega}}{\sqrt{\pi^2 + \left(\ln \frac{1}{\Omega}\right)^2}}$$

For most operational programs, a damping ratio of 0.4 or greater is recognized as satisfactory.

The ***damped wavelength*** is easily determined by multiplying the time for one complete oscillation by the wind speed in a tunnel.

Delay distance is another observed measure of the response of a vane to a step change. The time required for a vane to reach 50 percent of the distance from an initial displacement of 10 degrees toward the centerline on the first swing is the delay time. This is multiplied by the tunnel speed to obtain the delay distance.

2.31.2 Wind Data Requirements-Any data requirement should be expressed in the context of all applications for which the data may be used. Wind data are used in environmental monitoring for source location, transport and dilution modeling and as a diffusivity indicator The principal specifications are dynamic range (most important is the threshold) and dynamic performance (distance constant for speed and damping ratio and delay distance for direction) It is also important to specify the averaging time and method in order to judge the adequacy of the measuring and recording system. For most atmospheric dispersion studies. a starting speed of 0.5 m/s or less is appropriate for both vanes and anemometers. Wind vanes should have a damping ratio of 0 4 or greater and a 'delay distance of 5 m or less. Anemometers should have a distance constant of 5 m or less For climatological studies. less sensitive instruments may be used

Averaging for wind speed may be done by scalar methods (dilution) or vector methods (transport) and should represent one hour Wind direction should be averaged by obtaining the resultant vector direction for the hour. Sigma theta (standard deviation of the wind direction) should represent 3-10 minutes if stability categories are to be selected but should represent the hour when the preferable direct calculations are made for diffusion (Strimaitis, 1981).

2.3.2 Procurement

In purchasing a wind measuring system, follow the general guidelines advanced in Section **2.2.1,** "Instrument Procurement." It might be possible in research projects to spend more for instruments with the best specifications, or instruments of most recent design; but in operational programs, only the field-tested and time-proven instruments with known performance records should be purchased.

Caution should be used in purchasing components as opposed to systems. especially if the procurement of wind equipment is part of an installation' involving other instruments. It is important to match the dynamic characteristics of the wind sensors. and to match the electrical characteristics of the transducers with the readout device. The omission of such a minor consideration as mounting hardware could delay completion of an installation. In digital systems, special attention should be given to sampling and averaging times as well as to instantaneous as opposed to integrated values.

2.3.3 Acceptance Testing

Follow the general guidelines set forth in Section 2.2.2. "Acceptance Testing," Be certain that the supplier has provided all calibration certification data, including curves and specifications. Be particularly sure that there is provided a table or formula relating rate of rotation of the anemometer shaft (or frequency for light-chopper sensors if the number of pulses per revolution is also given) to wind speed (or output voltage given a voltage to speed range relationship). This will usually relate to a nominal propeller or cup The specific propeller *or* cup assembly should have a permanent identification code (serial number). In those cases when wind tunnel calibration data are provided. this identification is required.

The acceptance test for the direction vane should include a measure of how well the sensor represents the relative position of the vane to the sensor housing. Four points 90 degrees apart can be easily bench tested bv drawing perpendicular lines crossing at the vane rotation axis and holding the vane shaft parallel to the lines. Also check to see that the manufacturer's method of coping with the discontinuitv between

360 degrees and 001 degrees performs as specified.

2.3.4 *Calibration*

Refer to the general notes in Section 2.2.3, "Calibrations."

Bench Calibrations - Specific dynamic response characteristics such as threshold speeds, damping ratios, delay distances and distance constants can only be checked in a wind tunnel. Instruments **should** be returned to the manufacturer or a properly equipped wind tunnel facility for major calibration.

The system manual will generally have calibration methods specified. For wind speed the usual signal conditioner will require a DC voltage input which represents some output value in volts ***and*** wind speed units or it will require a frequency to represent some output value in volts ***and*** wind speed. Full scale is often used. Sometimes the sensor is used in calibration by turning the shaft at a known rate of rotation. Sometimes the system will have some level of built-in "calibration" which tests some parts of the system. Use the manufacturer's method for bench calibration. Other methods may also be used but they should supplement the manufacturer's instruction rather than replacing it. at least initially.

For wind direction sensors with potentiometers the manufacturer may specify substitution of known resistance for various angles relative to the sensor housing. Positioning of the connected sensor vane or built-in substitution resistance may also be specified. Use the method described by the manufacturer augmented by whatever additional tests will add useful information. These might include a measurement of the angular size of the "open space" where the potentiometer winding is left out to avoid shorting by the wiper, a measurement of hysteresis by approaching known positions from both clockwise and counterclockwise rotation, and testing any discontinuity avoiding operation (540degree range types). Any adjustments, mechanical or electrical, must be in accordance with the manufacturer's instruction (either from the instrument manual or direct communication) to avoid damage or voiding the warranty.

The common point of sensor deterioration is in the bearings of the bearing shaft assemblies of both the speed and direction sensors. When bearings start to fail as they inevitably will do, the starting threshold will increase. The low wind speed data are most important for air quality applications because the initial dilution is small and the concentration therefore is high. The deterioration of bearing performance is also hard to see in the data until the problem becomes quite serious. For example the data cannot discriminate (by usual inspection) between a system with an acceptable threshold of 0.5 m/s and one that has deteriorated to 0.7 m/s.

There is a method by which the bearing condition can be measured (Lockhart, 1978). The use of an instrument called a torque watch is not new but it is not widely applied as yet. It is a measurement which requires considerable care and experience. For wind speed the cups or propeller must be removed to avoid wind influencing the measurement. The torque watch adapter is attached to the shaft and the torqoe watch is inserted into the adapter and rotated until the shaft begins to turn. The maximum torque from repeated tests is the starring torque. If manufacturers do not have a torque specification for their sensor, they should be asked to provide one.

Orientation
by
Local Apparent Noon

Date of Observation _____

Observer(s) _____ _____

Day/Time of WWV Synchronization _____

Station Name _____

_____

Station Longitude	_____ o	_____	_____
Ref _____			
Standard Meridian	_____ o	_____	_____
Difference in degrees	_____ o	_____	_____
Difference in time (x4)		_____ min	_____ sec
Mean Time at Local Apparent Noon	_____ hr	_____ min	_____ sec
Ref _____			
True Noon Time _____ date	_____ hr	_____ min	_____ sec

Sitings *True Heading* *Target*

Figure 2.3.4 Example of solar noon orientation form and tables

Table 169.

Ephemeris of the Sun[1]

All data are for 0h Greenwich Civil Time in the year 1950. Variations of these data from year to year are negligible for most meteorological purposes, the largest variation occurs through the 4-year leap-year cycle. The year 1950 was selected to represent a mean condition in this cycle.

The *declination* of the sun is its angular distance north (+) or south (−) of the celestial equator.

The *longitude* of the sun is the angular distance of the meridian of sun from the vernal equinox (mean equinox of 1950.0) measured eastward along the ecliptic.

The *equation of time* (apparent − mean) is the correction to be applied to mean solar time in order to obtain apparent (true) solar time.

The *radius vector* of the earth is the distance from the center of the earth to the center of the sun expressed in terms of the length of the semimajor axis of the earth's orbit.

[1] U. S. Naval Observatory, The American ephemeris and nautical almanac for the year 1950, Washington, 1948.

EPHEMERIS OF THE SUN

Date		Declination °	Declination ′	Longitude °	Longitude ′	Equation of time m.	Equation of time s.	Radius vector
Jan.	1	−23	4	250	1	− 3	14	0.98324
	5	22	42	284	5	3	6	.98324
	9	22	13	288	10	6	50	.98333
	13	21	37	292	14	8	W	.98352
	17	20	54	296	19	9	54	.98378
	Z1	20	5	300	23	11	10	.98410
	25	19	9	304	27	12	14	.98448
	29	18	1	308	31	13	5	.98493
Mar.	1	− 7	53	339	51	−12	38	0.99084
	5	6	21	343	51	11	48	.99182
	9	4	48	347	51	10	51	.99287
	13	3	14	351	51	9	49	.——
	17	1	39	355	S0	8	42	.99508
	21	− 0	5	359	49	7	32	.99619
	25	+ 1	30	3	47	6	20	.99731
	29	3	4	7	44	5	7	.99843
May	1	+14	S0	40	4	+ 2	50	1.00759
	5	16	2	U	56	3	17	1.00859
	9	17	9	47	48	3	35	1.00957
	13	18	11	51	40	3	44	1.01051
	17	19	9	55	32	3	44	1.01138
	21	20	2	59	23	3	34	1.01218
	25	20	49	63	14	3	16	1.01291
	a	21	30	67	4	2	51	1.01358
July	1	+23	10	98	36	− 3	31	1.01667
	5	22	32	102	24	4	16	1.01671
	9	22	28	106	13	4	56	1.01669
	13	21	57	110	2	5	30	1.01659
	17	21	21	113	51	5	57	1.01639
	21	20	38	117	40	6	15	1.01610
	25	19	S0	121	29	6	24	1.01573
	29	18	57	125	19	6	23	1.01530
Sept.	1	+ 8	35	157	59	−	015	1.00917
	5	7	7	161	52	+ 1	2	1.00822
	9	5	37	165	45	2	22	1.00723
	13	4	6	169	38	3	45	1.00619
	17	2	34	173	32	5	10	1.00510
	21	+ 1	1	177	26	6	35	1.00397
	25	− 0	32	181	21	8	0	1.00283
	29	2	6	185	16	9	22	1.00170
Nov.	1	−14	11	Z17	S9	+16	21	0.99249
	5	15	W	222	0	16	23	.99150
	9	16	38	226	2	16	12	.99054
	13	17	45	230		15	47	.98960
	17	18	44	234	4	15	10	.98869
	21	19	45	238	6	14	18	.98784
	25	20	36	242	8	13	15	.98706
	29	21	21	246	11	11	59	.98636

Date		Declination °	Declination ′	Longitude °	Longitude ′	Equation of time m.	Equation of time s.	Radius vector
Feb.	1	−17	19	311	34	−13	34	0.98533
	5	16	10	315	37	14	2	.98593
	9	14	53	319	40	14	17	.98662
	13	13	37	323	43	14	20	.98738
	17	12	15	327	46	14	10	.98819
	21	10	S0	331	48	13	50	.98903
	25	9	23	335	49	13	19	.98991
Apr.	1	+ 4	14	10	42	− 4	12	0.99928
	5	5	46	14	39	3	1	1.00043
	9	7	17	18	35	1	32	1.00160
	13	8	46	22	30	− 0	47	1.00278
	17	10	12	26	25	+ 0	13	1.00390
	21	11	35	30	20	1	6	1.00500
	25	US6		34	14	1	53	1.00606
	29	14	13	38	7	2	33	1.00708
June	1	+21	57	69	56	+ 2	27	1.01405
	5	22	28	73	46	1	49	1.01465
	9	22	52	77	36	0	6	1.01518
	13	23	10	81	25	−	18	1.01564
	17	23	22	85	15	− 0	33	1.01602
	21	23	27	89	4	1	25	1.01630
	25	23	25	92	53	2	17	1.01649
	29	23	17	96	41	3	7	1.01662
Aug.	1	+18	14	123	11	− 6	17	1.01494
	5	17	12	132	0	5	59	1.01442
	9	16	6	135	S0	5	33	1.01384
	13	14	55	139	41	4	57	1.01318
	17	13	41	143	31	4	12	1.01244
	21	12	23	147	22	3	19	1.01163
	25	11	2	151	14	2	18	1.01076
	29	9	39	155	5	1	10	1.00986
Oct.	1	− 2	53	187	14	+10	1	1.00114
	5	4	26	191	11	11	17	1.00001
	9	5	58	195	7	12	W	0.99888
	13	7	19	199	5	13	a	.99774
	17	8	58	203	3	14	25	.99659
	21	10	25	207	1	15	10	.99544
	25	11	50	211	0	15	46	.99433
	29	13	12	214	59	16	10	.99326
Dec.	1	−21	41	248	13	+11	16	0.98604
	5	22	16	252	16	9	43	.98546
	9	22	45	256	20	8	1	.98494
	13	23	6	260	24	6	12	.98446
	17	23	20	264	28	4	17	.98405
	21	23	26	268	32	2	19	.98372
	25	23	25	272	37	+ 0	20	.98348
	29	23	17	276	41	− 1	39	.98334

Figure 2.3.4 (continued) (Reproduced with permission)

For wind direction the procedure is the same but because the sensor usually has a potentiometer attached to the shaft, the range of the torque required to turn both the shaft and the potentiometer is higher than for wind speed. This usually requires a second torque watch with a higher operating range. For sensors where the vane cannot be easily or completely removed. the test must be done in a still room or enclosure with the sensor shaft vertical or perfectly balanced.

It should be noted that an experienced instrument technician can detect the condition of a bearing assembly by "**feel**" with perhaps as much sensitivity as the torque watch. This talent should be used as a routine method for checking bearing condition for those programs which do not require documentation of data quality and do not have the torque watch capability. Others should develop the capability.

In general field calibrations should be as much like the bench calibrations as the field conditions and available equipment will allow. In addition, however. the field calibration must include those additional tests which relate to the system being installed. Two examples of the additional tests are the orientation of the direction vane or fixed propeller assembly with respect to TRUE NORTH and the alignment of the sensors in the vertical operating position. Field calibrations should be done at least every six months.

2.3.5 *Installation*

Follow the general guidelines set forth in Section 2.2.6, "Preparation ior Field Installation." and in Section 3, "Methods for Judging Suitability of Sensor Siting."

Wind vanes require orientation to true north. Some manufacturers electrically orient the transducer in the housing and identify the northfacrng side of the housing with an engraved mark. or they provide a flat surface for sighting toward north Other manufacturers supply. as an option. a mounting jig for keeping the vane in proper alignment for orientation

The most accepted procedure for determining true north involves shooting the North Star with a first-order theodolite. Any textbook or handbook on land surveying will describe the technique and will contain all the necessary tables. Best results may come from hiring a registered land surveyor to establish true north

Another acceptable method of establishing true north is by the location of the sun at true solar noon (see Figure 2.34)

0001453

T_{tsn} = (12:00:00) + [B(Long-15n) -A]

where T_{tsn} = local standard time of true solar noon
A = "Equation of Time" from "Ephemeris of Sun" tables (List, 1971)
B = 4 minutes per degree of longitude
Long = local longitude
n = number of time zones from Greenwich
n = 5 Eastern
n = 6 Central
n = 7 Mountain
n = 8 Pacific
n = 9 Yukon
n = 16 Alaska/Hawaii
n = 11 Bering

Alignment in the vertical is equally important. Studies have indicated that vertical misalignment of 1 degree may yield data errors of 10 percent or greater in measurement of turbulent parameters (Pond, 1968; Deacon, 1968; and Kraus, 1968). Vertical alignment should be established with a good carpenter's level or torpedo level at two points 90° apart in the horizontal.

2.3.6 *Operation of a Wind Measuring System*

An operational check and calibration of the wind system is recommended after the installation has been completed and at intervals of at least every six months after operations begin.

The use of tic-marks on chart rolls is very effective to indicate time of visit or some operation. These are often made with event pens purchased with the recorders. Whether manually or automatically actuated, the event pens can be energized to produce distinguishing marks corresponding to different times. If the sensor is readily accessible, another simple means of establishing a tic-mark is to rotate the vane 360 degrees and note the time on the strip chart. Where strip chart recorders are used, time checks every 24 hours are desirable.

Of course, documentation relating to date, time. etc., should be entered on each strip chart when it is installed and removed. The amount of data to be reduced or retrieved from properly annotated and logged strip charts will depend on program objectives in conjunction with the amount of the strip chart data needed. All operational activities should be logged including those written on strip charts. It is not possible to log too much information as long as it is consistent. The problem is always with too little information, particularly time and date

2.3.7 *Preventive Maintenance (PM)*

Follow the general guidelines in Section 2.2.5, "Operational Checks and Preventive Maintenance." Physical checks of the equipment should be made as often as possible, and at least monthly. These checks include an examination of the sensors and the readout equipment. At locations where pollution is heavy, it may be necessary to routinely change the bearings in both the anemometer and vane housing. Oilless bearings should never be oiled. Bearings can be checked with a torque watch (see Section 2.3.4).

Recording equipment with pens and ink should be cleaned on a regular monthly schedule. If the recorder is equipped with disposable felt tip pens, careful monitoring is recommended. The fluctuations of the wind, as recorded by the pen, result in an average pen life of 2 or 3 days, so there may be a loss of data.

Light freezing rain with little wind is the most detrimental condition for cups and especially for propellers. It has been found that a light spray coating of Pam® (a household substitute for grease) or an equivalent non-sticking spray, helps to retard the formation of ice especially on propeller anemometers. For extremely low temperature conditions, the use of external heat lamps or heater strips is helpful. Internal heaters, now available with some wind sensors, keep bearings free but have low wattage and are of limited use in severe conditions. Spare parts for anemometers and vanes should include replacement cup assemblies or propellers, vanes, and bearings. A log should be kept of all PM activities.

2.3.0 *Audit Procedures*

Refer to Section 2.2.4, "Audits," for general guidelines. A complete systems audit is necessary near the beginning of any wind measuring program. Particular attention should be paid to sensor siting.

Performance audits may include but should not be limited to repeating the field calibration on the sensors and associated cabling while they are still in place (see Section 2.3.4) The wind speed calibration procedure may involve rotation of the anemometer with a constant speed motor When a synchronous motor is used for an audit there needs to be a method for measuring the rate of rotation and there needs to be AC power, usually 60 Hertz. It may not be possible to get the power at the sensor location or even the site location It also may be troublesome to measure the rate of rotation if the transducer is a generator since generators often have electrical noise and the averaging of voltage samples is less accurate than counting revolutions in an accurately known time gate.

An alternative method is to challenge the anemometer shaft with at least two known ***average.*** rates of rotation. The rates should represent common low wind speeds; somewhere in the ranges 1-2 m/s and 5-7 m/s for example. One should audit the low end of the speed range because that is where the data are most important for air quality applications and where error estimates are most valuable. It is also easy to know the accurate average rate of rotation by counting revolutions (by switch or manually) over a period of time significant to the data period (2 to 15 minutes typically) where the number of rotations is large enough that the uncertainty Over the time period is less than one percent. The elapsed time measurement will always be accurate enough so that the average rate of rotation will be within one percent of the reading. Since an average is used, the motor driving the shaft does not need to be synchronous and a DC motor driven by a battery will give freedom from the commercial power requirement. It is important to have nearly or exactly the same time interval used by both the motor drive and the output reading. The only part of the system challenged by this method is the measurement and recording of the rate of rotation expressed as wind speed. There is no test of the rate of rotation of the sensor as a function of wind speed; that relationship is either given by the manufacturer as a nominal value or was determined by a wind tunnel test. If a wind tunnel test was made initially and the sensor is identified by serial number and shows no sign of deformation in shape, it is reasonable to assume the sensor rate of rotation vs. wind speed relationship has not changed. It is not necessary to wind tunnel test every six months or year. If. on the other hand, a wind tunnel test has not been done and the program requires documentation of accuracy. a wind tunnel test should be done or an audit with a collocated transfer standard (CTS). The CTS has the advantage of challenging the entire system in naturally turbulent flow The CTS must be well sited to measure representative flow without mutual interference A period of at least 12 hours (half of a diurnal cycle) should be used to obtain as much range comparison as is practical

The wind direction audit procedure should concentrate on output when the vane is aimed at known sites The direction to and from a distant landmark should be determined by independent methods Map location is best if a good map is used (USGS, airways or equiva-

lent) and the site can be accurately located. Another method is to use a north finding technque such as described in Section 2.3.5 and to measure the angle between north and the landmark with a theodolite or a sextant. The direction vane should be taped or clamped in the direction desired so a steady reading can be accurately made. If a sigma theta measurement is included in the system. this would be a good time to verify zero.

If a CTS is used, the comparison of averages will be subject to orientation differences (bias) and perhaps others caused by different dynamic performance characteristics and different averaging methods. When properly exposed. the CTS gives the best estimate of accuracy when operating in a naturally turbulent flow. Collocated sensors are within 10 m of each other in the horizontal and one meter in the vertical according to Hoehne (1971). Data taken while the wind is within ±30° of the line between the sensor being audited and the CTS should not be used.

2.4 Temperature Measurements

2.4.1 *Introduction*

Temperature is not simply an isolated piece of meteorological data but is used in the measurement and determination of a number of other atmospheric parameters such as vertical temperature gradient (stability), relative humidity, and gaseous pollution concentrations. Several types of sensors and recorders are used routinely in a variety of combinations to acquire temperature data. The following sensors are used most often for environmental measurements.

Linear Thermistors - Thermally sensitive resistors or thermistors are electronic semiconductors that are made from certain metallic oxides. The resistance of a thermistor varies inversely with its absolute temperature. Linear thermistors are a composite of two or more thermistors and fixed resistors designed to produce a linear response to a wide temperature range. In system configuration, the thermistor is connected to a bridge circuit or some suitable signal conditioning circuit. When a low excitation voltage is applied to the thermistor, the output from a bridge circuit is a voltage that varies directly with the temperature of the sensor. Linear thermistors are particularly well suited to remote sensing applications because of their large resistance change to temperature change ratio. Coefficients on the order of 125 Ω/°C are common (Lockhart and Cannon. 1978). reducing the impact of lead resistance errors. A lead resistance of 12.5 Ω would be required to produce a 0.1°C temperature measurement error. The thermistor or thermistor composite may be packaged as a glass covered bead or potted in a stainless steel sheath. The latter is usual and best for monitoring applications

Resistance Temperature Detectors (RTD) - The RTD operates on the principle that the electrical resistance of a pure metal increases with temperature. Although RTD sensors are made using silver, copper, and nickel wire, platinum wire is the best material because of its superior linearity and stability characteristics. high sensitivity, and resistance to corrosion. The RTD probe is encased in a protective stainless steel housing composed of an insulating core wrapped with platinum wire. The resistance of the wire is measured by a bridge circuit in a signal conditioner. The RTD operates at a much lower resistance to temperature ratio than the linear thermistor. RTD's used most often in meteorological work have a coefficient of resistance change on the order of 0.4 ohms per degree Celsius, and are more sensitive to lead resistance errors than are thermistors. 'Three wire" and "four wire'' systems are configurations that automatically compensate for lead resistance.

Liquid-In-Glass-Thermometers - Most of these thermometers are 10-1/2-inch glass tubes with a uniform capillary bore and a liquid reservoir or bulb at the bottom. Thermometers are usually mounted on a stainless steel back with the bulb protruding to allow free air circulation. Volumetric expansion and contraction of the operating liquid provides the measure of temperature. The liquid is usually mercury but maybe a mixture of ethyl alcohol and red dye. Thermometers filled with alcohol are called spirit thermometers. Though inherently less accurate than a mercury thermometer, the spirit thermometer must be used where extremely cold temperatures are anticipated because mercury will freeze at -38°C.

Thermocouples - Because of its complex circuitry and somewhat limited accuracy. the thermocouple is not a popular operational meteorological sensor, although its vast capabilities make its use in other temperature measurement applications quite common. The thermocouple operates on the principle that when two different metals are joined, a small voltage with a temperature-dependent magnitude is generated. By comparing this voltage to the voltage generated by the same two metals joined at a temperature-controlled reference junction (ice point), the ambient temperature can be determined.

Deformation-Type Thermometers - This category of thermometer depends upon the thermal expansion and contraction of metals or liquids. The response to temperature changes is actual physical movement of the sensor mechanism, which is mechanically transmitted through a system of levers to a thermograph, where a continuous temperature trace is produced. The most common deformation-type thermometers are the bimetallic thermometer, where vastly different thermal expansion properties of two mated metal strips produce deformation: the Bourdon tube thermometer, where a coiled, hollow, spirit-filled. flexible metal tube changes shape with the thermal expansion and contraction of the internal fluid; and the mercury-in-steel thermometer, where the pressure produced by thermal expansion of the mercury is transmitted to a Bourdon tube. With the coming of age of the quick-response electronic recording sensor system, slow-reacting thermographs with their requirement of manual data reduction are slipping in popularity.

2.4.1. Sensor Characteristics-***Accuracy***-A high quality mercury thermometer properly calibrated will provide temperature data of sufficient accuracy for most atmospheric measurement programs. Over the years. the capillary bore will tend to contract slightly, causing the zero point to rise. Because the thermal response of mercury is essentially linear, this error is correctable through calibration. The most serious errors incurred in using a mercury thermometer are usually due to improper exposure and/or observer error (e.g., parallax error in reading the temperature). Typical commercial platinum RTD sensors follow the platinum characteristic that represents a resistance accuracy of ±0.26°C at 0°C and ±0.38°C at 50°C. Linear thermistors are available commercially with an accuracy of ±0.15°C over the range of temperatures normally encountered in environmental measurements (Lockhart and Gannon. 1978). Ordinary commercial thermocouples are only accurate to ±1°C (Wang, 1975). Accuracy of a measurement system is limited more by such factors as sensor exposure, improper coupling, and signal interference than by accuracy of the sensor For air quality monitoring applications. an accuracy (including coupling error) of better than 0.5°C is easily achievable and adequate (Strimaitis. 1981)

Linearity - There are no significant linearity problems with anv of the electronic or liquid-in-glass sensors

within the extremes of tropospheric temperature. Some linearity problems occur in the deformation-type sensors, particularly at extreme temperatures.

Response Time - A certain amount of caution must be exercised in assessing the value of quick response time in making stationary environmental temperature measurements. At the warmest time of the day, a continuous Eulerian temperature trace may show variations of up to 1°C in a 30-second period. Care must be taken in evaluating instantaneous temperature data from a thermistor or RTD, both of which may have time constants as short as 5 seconds or less. For both of these sensors, temperature values should be the average of a series of readings taken over a minimum period of 1 minute to avoid "noise" errors. Usually the stainless steel sheath which protects the sensitive element for field monitoring use adds to the time constant mechanically thereby providing both ruggedne'ss and a more useful time constant.

Precision - Most good quality electrical temperature systems used for monitoring in the atmosphere will have an output with better resolution and precision than accuracy. The application of the data may take advantage of this fact. For example, a temperature difference between two levels on a tower may (and should) be calibrated around the precision of each sensor yielding an accuracy of a difference on the order of the precision of the sensor (0.1°C for example). This statement must be qualified to either ignore the coupling error or assume each sensor will suffer the same coupling error and, therefore, not influence the difference measurement. The latter is a reasonably good assumption when identical radiation shields are used.

The accuracy of the temperature differential measurement system excluding coupling errors may be as good as the resolution or precision if an effort is made to either adjust the circuits or correct the data to achieve it. The nominal values quoted above reflect an interchangeability with circuits adjusted to the nominal values given in the manufacturer's manual. Given sensor stability, the accuracy will be as good as the calibration.

Durability - All of the electronic temperature sensors are fairly rugged and stable. Liquid-in-glass thermometers obviously require careful handling. The deformation thermographs also require delicate handling as ***any*** physical damage will alter the calibration.

2.4.1.2 Solar Radiation Shields-The most serious problem encountered in environmental thermometry is radiation error, which can amount to several degrees Celsius at midday. Early attempts to combat radiation error took the form of instrument shelters, such as the all-wood, louvered, double-roofed cotton-region type. Much better results in reducing radiation error have been achieved with aspirated radiation shields (Figure 2.4.1).

Naturally Ventilated Radiation Shields - The most common of these radiation shields employs a vertically mounted sensor with a 360° ventilation exposure. The housing is topped with single or multiple polished domes for solar radiation shielding and has lower circular shields to block terrestrial and reflected radiation. The vane oriented radiation shield directs the ambient wind to the temperature sensor. A swivel-mounted, white, horizontal, double-walled tube is equipped with a large vane that keeps the housing opening pointed into the wind. However, these shields give large errors when the wind is light. Both of these naturally ventilated radiation shields will accept a variety of electronic temperature sensors, including the thermistor, thermocouple, and RTD.

Mechanically Aspirated Radiation Shields - This type of radiation shield is used where power is readily available to

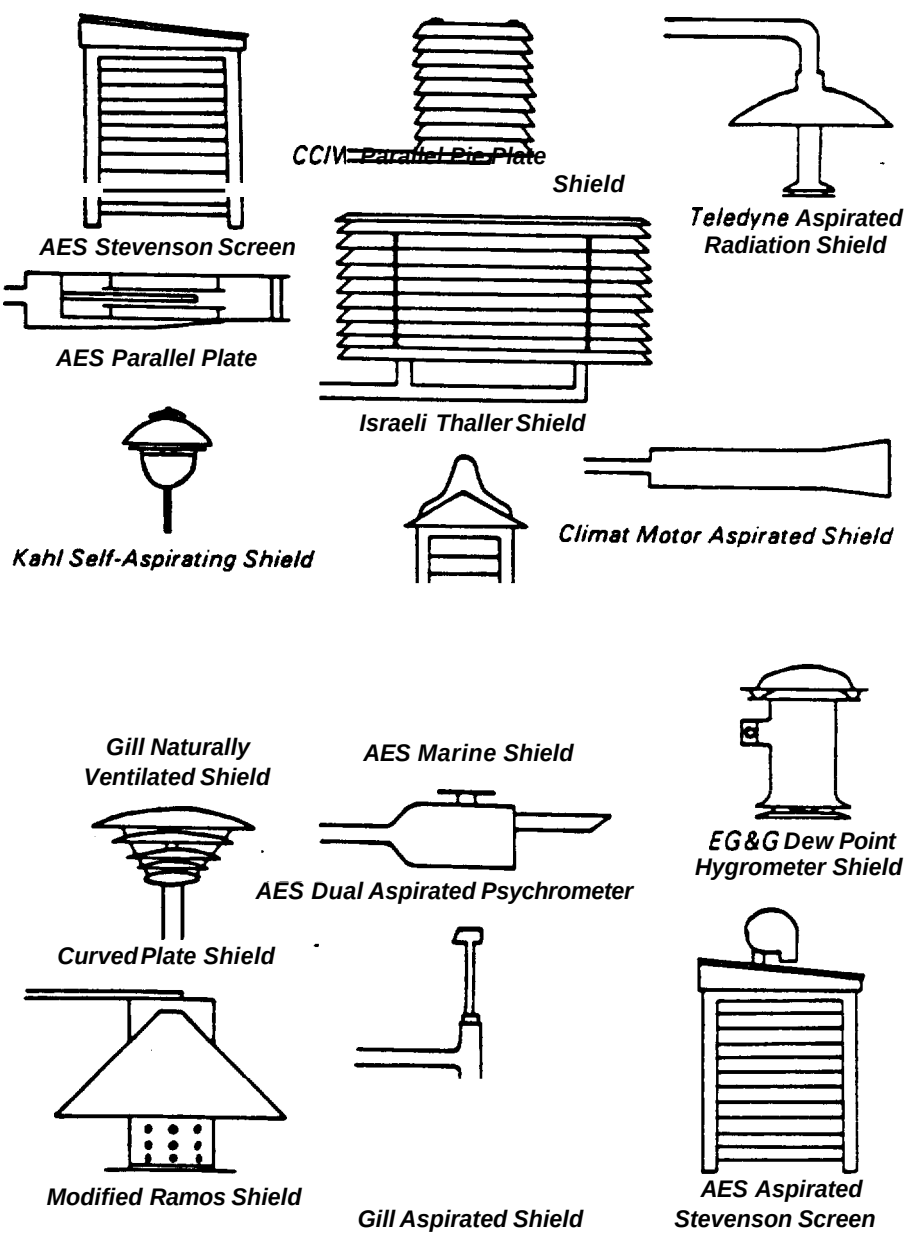

Figure 2.4.1. Examples of various radiation shields (McTaggart-Cowan and McKay, 1976).

drive the aspirator motor, which draws ambient air across the sensor at an average flow of 5 m/s. The radiation shield may take a number of forms, but common features include double-wall construction and white paint. Some use Thermos® bottle type wall construction. Some are mounted horizontally with the air intake facing north, while on others, the tube is mounted vertically with the air intake facing downward. Some vertical units also employ domed polished radiation shields for both sky and ground radiation shielding (McTaggart-Cowan and McKay, 1976). These mechanically aspirated radiation shields will accommodate the full range of electronic temperature sensors along with a variety of dew point and humidity sensors. It is desirable that aspirator motors be wired to signal whether or not they are operating, particularly in tower installations.

2.4.1.3 Temperature Data Requirements-In general, measuring temperature with an accuracy greater than 0.5°C may not be necessary. Extreme daytime horizontal temperature gradients are well documented (Hoffmann, 1965. and Department of the Army, 1975). However, certain circumstances require more accuracy or relative accuracy for differential temperature measurements. For example, a temperature gradient measurement requires a relative accuracy of temperature or an absolute accuracy of temperature difference of 0.1°C. This is true for the low level local surface gradient measurement between 2 m and 10 m above the ground or for the more conventional measurement between 10 m and 60 m. Also, if humidity is measured by the wet-bulb and dry-bulb difference, sensors should be matched so that small differences are meaningful.

The very fact that the atmosphere is a turbulent. differentially heated fluid should remind any investigator that a temperature recorded to the nearest tenth of a degree is representative of only a very small volume of air for a very short period of time. All routine monitoring applications of temperature data, be they air temperature or temperature gradient. will be expressed as a longer term average.

2.4.2 *Procurement*

In purchasing a suitable temperature sensor system. follow the general guidelines advanced in Section 2.2.1, "Instrument Procurement." Pay particular attention to data requirements. including management and reduction. Evaluate the measurement site or sites. giving consideration to power requirements. cable lengths, possible signal interference, sensor mounting and exposure. and housing requirements for ancillary equipment.

2.4.3 *Acceptance Testing*

Follow the general guidelines set forth in Section 2.2.2, "Acceptance Testing." The general response of the sensor can be checked by placing it alternately in warm and cdd water and observing the output. This unnatural exposure may damage some types of sensors. It is prudent to keep the sensor assemblies dry by covering them with a thin plastic bag. This prevents any "wicking" of water into electronic assemblies.

If the time constant is to be tested (important primarily for research applications), it should be done in the aspirator at the normal operating flow rate. The aspirator should provide a flow by the sensor of about 5 m/s. The flow can be checked with a pitot tube or hot wire anemometer. If the flow seems weak, check the motor output, the fan mechanisms for binding or damage, and the air passages for obstructions.

2.4.4 *Calibration*

Refer to the general notes in Section 2.2.3, "Calibrations."

Bench Calibration - In bench calibrating a temperature sensor, one may use material changes of state to obtain an absolute reference temperature. For meteorological purposes, the triple point of water is one such absolute reference that falls within the normal range of ambient boundary layer temperatures. It requires special equipment to produce this temperature. In calibrating a remote electronic sensor, all ancillary equipment. including cables, signal conditioners. and recorders, should be hooked up as close to field configuration as is possible to achieve in the laboratory. Deformation-type instruments are usually returned to the manufacturer for calibration. A minimum of two reference points is required. All calibrations should be performed in stable thermal masses in insulated containers, such as Dewar flasks or Thermos® bottles (Figure 2.4.2). A precision mercury-in-glass thermometer or other calibrated thermometer is required. This instrument should be cenified as having been calibrated according to National Bureau of Standards (NBS) procedures (Lockhart and Gannon. 1978). A bath must be continuously agitated either by hand or with a mechanical stirrer that is thermally insulated so as not to act as a heat sink or source. A solid mass in near thermal equilibrium may also be used The sensor must be completely submerged, held with an insulated clamp, and not allowed to contact either the stirrer, the reference thermometer, or the sides of the flask If an ice bath is used. it should contain distilled water and ice slurry made from distilled water (Wang, 1975) For the second reference, best results will be obtained by using water at near-ambient temperature to reduce heat exchange problems When temperatures have stabilized, record the readings of both the sensor and the reference thermometer

If the calculated error at each calibration point falls within the accepted bounds for the particular sensor, the calibration can be certified If adjustments are required, the calibration checks must be repeated

The bench calibration of a differential temperature system (often called delta T) requires both sensors to be at exactly the same temperature For this. thermal stability is much more important than accurate knowledge of the temperature If the zero difference is verified at two temperatures (such as near 0°C and 40°C), then it is also verified that each Sensor is reacting with the same output vs temperature transfer function When two are alike it is reasonable to expect they are following the manufacturer's nominal transfer function The differencing circuit can be calibrated by using substitute sensors

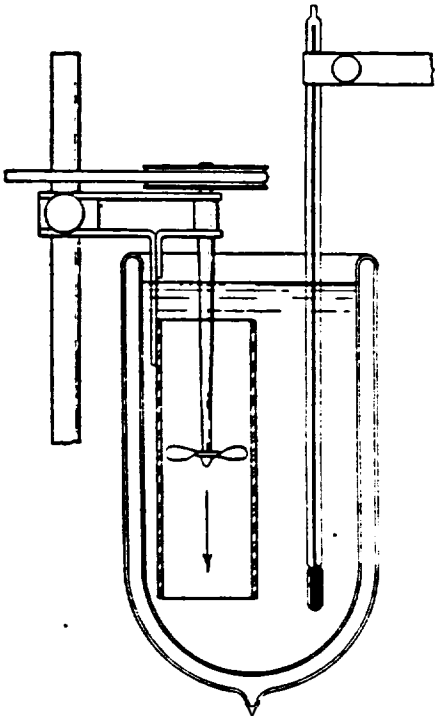

Figure 2.4.2 *A simple bath for calibrating thermometers (Middleton and Spilhaus, 19531*

0001455

(resistance boxes, etc.) with an accuracy consistent with the 0.1°C goal. It is difficult to maintain differential thermal masses of known temperature to achieve this calibration.

Field Calibration - If at all possible, the bench calibration procedures should be duplicated in the field. Obviously, for this to be possible, the user must have a mobile laboratory or on-site access to a sheltered work area. To perform a proper calibration, the sensor must be removed from its housing. For electronic sensors, all cables must remain attached. If no shelter is available, calibration must be done during a period of calm winds under either cloudy skies or at night under inversion conditions. If these minimum conditions cannot be achieved, then field calibration is not possible and a calibration check will be performed instead. If the check indicates that the calibration is off, then the instrument must be brought in for a bench calibration.

In addition to the sensor checks outlined above, circuitry checks of remote sensing systems are often made by replacing the electronic sensor with resistors of known value. Some systems include built-in reference resistors allowing easy "internal" calibration checks.

Both the bench and field oalibration methods described above deal with the transducer and measurement system but ignore the coupling by the radiation shield. A collocated transfer standard (CTS) of known accuracy may be used in an operational way for a period of time at least one half a diurnal cycle to maximize the range being tested. With hourly (or shorter) averages taken over exactly the same periods of time as the monitoring system and with assurance of noninterference with the air which reaches each sensor, an estimate of accuracy for the ***complete*** measurement system can be made. Errors in coupling from solar or terrestrial radiation cannot be adjusted for. The solution for this problem will usually require a better radiation shield.

2.4.5 *Installation*

Follow the general guidelines set forth in Section 2.2.6, "Preparation for Field Installation '' The shakedown period for a temperature sensor need only last long enough for the diurnal temperature cycle to be defined and a number of comparisons against an NBS-certified thermometer to be made, usually a few days Following bench calibration and shakedown, the sensor is shipped to. the field Proper siting of temperature sensors is described in Section 3, *'Methods for Judging Suitability of Sensor Siting," Louvered shelter doors and mechanical aspirator openings should be oriented north in the northern hemisphere. Tower-mounted sensors should have downward facing aspirated shields cantilevered on a boom not less than one tower diameter in length to minimize the effects of sensible heat from the tower structure. Installations on the sides of buildings or through windows of buildings cannot be expected to provide unbiased data. All wire connections should be made as soldered joints, without acid-type fluxes, using approved soldering techniques; "cold joints" are one of the greatest sources of difficulty in resistance thermometry. Proper grounding procedures will minimize problems associated with potential gradients and thunderstorm activity.

Once installed, a calibration check should be made. At least one further cursory operational check should be made 24 hours after the instrument has been placed on line.

2.4.6 *Field Operation of a Thermometry System*

As part of the quality assurance program, a field calibration should be performed a minimum of once every 6 months. Calibration checks should be made monthly. A technician should visit the site as often as possible, even daily. No site should go unattended for longer than a month. Each time the site is visited, a comparison should be made against a reference thermometer. A side-by-side cornparison is desirable although this may not be practical with certain tower installations. The data should be inspected for a reasonable diurnal temperature pattern. Where strip chart recorders are used, time checks every 24 hours are desirable. Data retrieval will depend upon program objectives, but even for climatological programs, data should be retrieved monthly. All operational activities during a site visit should be logged.

2.4.7 *Preventive Maintenance*

Temperature sensors are basically maintenance free. Most PM on thermometry systems is concerned with housings. Instrument'shelters must be cleaned as often as local weathering conditions require. The air passageways and screens in radiation shields. both aspirated and naturally ventilated, should be cleaned out at least once every month. The aspirator motor should be checked during each visit. For remote sites or where data collection is critical. the aspirator motor should be changed periodically as recommended by the manufacturer. Lubricate the aspirator system as required, but not oilless bearings. The spare parts inventory should include a sensor and aspirator motor. The most common cause of component failure is lightning. Obviously a system damaged by lightning will require recalibration after repairs are made. All PM activities should be logged.

2.4.8 *Audit Procedures*

Refer to Section 2.2.4, "Audits," for general guidelines.

A performance audit on a thermometry system is simply a calibration check following the procedures previously outlined in Section 2.4.4. If a field calibration check is not physically possible or practical, then the audit may consist of running a side-by-side comparison using a second complete sensor system with known accuracy and response characteristics. Inserting a calibrated audit sensor into the same housing with the sensor being audited may be a poor procedure, as the second sensor may alter the flow characteristics and sensible heat regime within the housing. There is no requirement dictated by temperature sensor characteristics for a regular schedule of temperature instrument audits. Of course, a system audit should be performed near the beginning of a measurement program. Other audits should be geared to program goals and may be random events.

2.5 Humidity/Dew Point Measurements

2.5.1 *Introduction*

Humidity is a general term for the water-vapor content of air. Other, more specific, terms for humidity include: absolute humidity, relative humidity, specific humidity, mixing ratio, and dew point (Huschke, 1959). This section discusses the measurement of relative humidity and dew point.

Relative humidity (RH) is a dimensionless ratio of the actual vapor pressure of air to the saturation vapor pressure at a given dry bulb temperature. Dew point is the temperature to which air must be cooled, at constant pressure and constant water vapor content, to be saturated with respect to liquid water. Frost point is the temperature below 0°C at which air is saturated with respect to ice.

There are many ways to measure the water vapor content of the atmosphere These can be classified in terms of the six physical principles (Middleton and Spilhaus, 1953) listed in Table 2.5.1 Examples of instruments for each technique are provided.

Table 2.5.1. *Principles of Humidity Measurement*

● *Reduction of temperature by evaporation*	- *psychrometer*
● *Dimensional changes due to absorption of moisture. based-on hygroscopic properties of materials*	- *hygrometers with sensors of hair, wood. natural and synthetic fibers*
● *Chemical or electrical changes due to absorption or adsorption*	- *electric hygrometers such as Dunmore Cell; lithium. carbon. and aluminum oxide strips; capacitance film*
● *formation of dew or frost by artificial cooling*	- *cooled mirror surfaces*
● *Diffusion of moisture through porous membranes*	- *diffusion hygrometers*
● *Absorption spectra of water vapor*	- *infrared and UV absorption; Lyman-alpha radiation hygrometers*

Instruments such as diffusion hygrometers that involve the diffusion of moisture through porous membranes are used primarily in research programs. The same is true of instruments that utilize the absorption spectra of water vapor, such as infrared and ultraviolet hygrometers and Lyman-alpha radiation hygrometers. This class of instrument requires frequent attention and represents a major investment in procurement and maintenance costs.

Psychrometry identifies a basic technique for deriving both relative humidity and dew point temperature from a pair of thermometers—a dry ***bulb*** thermometer that measures the ambient temperature, and a wet ***bulb*** thermometer. The reservoir of the wet bulb thermometer is covered with a muslin wick. When the wick is moistened and the thermometer ventilated, the indicated temperature is related to the amount of evaporative cooling that can take place at the existing ambient temperature, water vapor partial pressure, and the atmospheric pressure (Figure 2.5.1).

The temperature sensors in a ***sling psychrometer*** are usually mercury- or alcohol-filled thermometers. The Same is true of portable motor-operated psychrometers, but the psychrometric principle has been used with sensors made of thermocouples, wire-wound resistance thermometers, thermistors, and bimetal thermometers. Relative humidity and dew point are easily determined by observing the difference between the dry bulb and the wet bulb—the wet bulb depression—and then referring to psychrometric tables, charts. or calculators. One must be certain to use computed values for the atmospheric pressure range of the location where the observation is taken.

More measurements of atmospheric water vapor have probably been made with the sling psychrometer than by any other manual method. When properly used and read, the technique can be reasonably accurate, but it is easily misused. The most important errors are from radiation, changes during reading, and parallax. The Assmann psychrometer continuously aspirates the thermometers and protects them from radiation which allows time and accessibility for a careful reading to avoid parallax (a parallax avoiding guide to keep the eye perpendicular to the meniscus is best). For good accuracy, particularly where a variety of observers are taking measurements, an Assmann or equivalent type psychrometer is recommended. One should use the psychrometric tables with dew point values for the altitude (pressure) where measurements are being made.

Hygrographs, which record relative humidity. or ***hygrothermographs.*** which record both relative humidity and temperature, usually incorporate human hair as the moisture-absorbing sensor. Other instruments with sensors that respond to water vapor by exhibiting dimensional changes are available. They are made with elements such as wood, goldbeater's skin (an animal membrane), and synthetic materials, especially nylon.

Instruments that utilize the hygroscopic characteristics of human hair are used most frequently, primarily because of availability. The hygrograph provides a *direct* measure of relative humidity in a portable instrument that is uncomplicated and is relatively inexpensive. There are limitations in accuracy below 20 percent relative humidity and above 80 percent that may be unacceptable, as

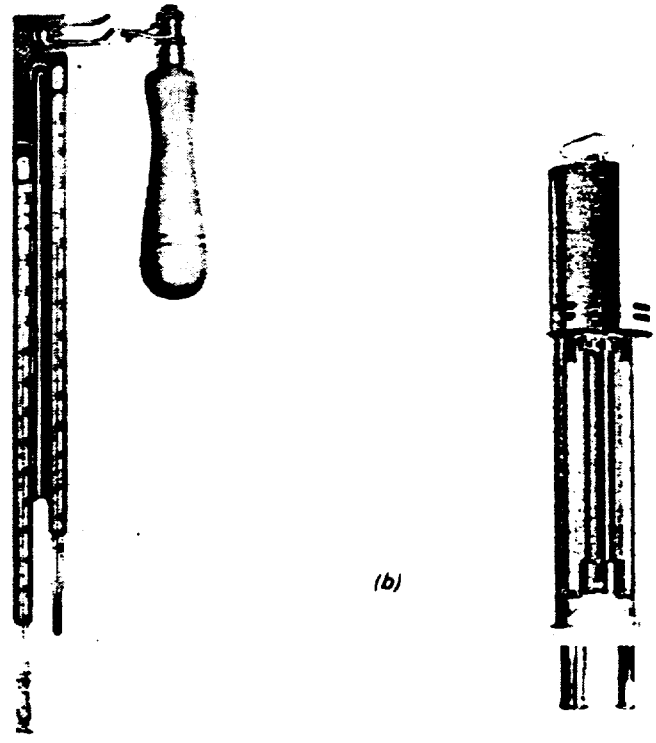

Figure 2.5.1 *An official National Weather Service sling psychrometer (a) and an Assmann psychrometer (b).*

0001456

well as limitations for applications at low temperatures. Atmospheric Environment Services of Canada has found that Pernix, a specially treated and flattened hair element, can be used at temperatures below freezing without serious errors. The hygrothermograph made to an NWS specification incorporates human hair as the humidity sensor and bourdon tube (a curved capsule filled with alcohol) as the temperature sensor.

Dew point hygrometers with continuous electrical outputs are in common use for monitoring. One dew point hygrometer was originally developed for air conditioning control applications under the trade name ***Dewcel*** (Hickes, 1947) and was adopted to meteorological use (Conover, 1950). From the trade name, the generic term ***dew cell*** has evolved that now identifies an instrument made by several manufacturers. This device determines moisture based on the principle that for every water vapor pressure in contact with a saturated salt solution, there is an equilibrium temperature at which this solution neither absorbs nor gives up moisture to the surrounding atmosphere.

The dew cell, also known by the trade name ***Dew Probe,*** consists of bifilar wire electrodes wrapped around a woven glass cloth sleeve that covers a hollow tube or bobbin. The sleeve is impregnated with a lithium chloride solution (Figure 2.5.2). Low-voltage a.c. is supplied to the electrodes, which are not interconnected but depend on the conductivity of the atmospherically moistened lithium chloride for current flow. The temperature sensor in the tube is usually a resistance thermometer, but can be a thermistor, thermocouple, bimetal thermometer, capillary system, or any sensor calibrated for the proper temperature-to-dew-point relationship.

In the early 1960's, the technique of detecting the dew point on a ***cooled mirror surface*** evolved into a production-type unit. This unit was automatically operated and had an optical dew-sensing system that incorporated thermoelectric cooling (Francisco and Beaubien, 1963). Four manufacturers now produce a meteorological type, thermoelectric, cooled-mirror dew point instrument (Mazzarella, 1977). Three of these instruments cover the range of -50' to +50°C. Linear thermistors are used to measure the mirror temperature in three of the units; a platinum wire sensor is used in the other. All are designed with simultaneous linear output signals for T_{dp} (dew point temperature) and T (ambient temperature). Two of the manufacturers make claims to NBS-traceability with stated dew point accuracies ranging from ±0.2° to ±0.4°C and ambient temperature accuracies ranging from ±0.1° to ±0.5°C. All incorporate some form of standardization that involves clearing the mirror by heating, either automatically or manually. Although complex in design and operation, this type of cooled-mirror hygrometer is considered to be a functional standard.

In recent years, two other sensors for humidity have been used on tower installations for atmospheric pollution studies. One involves the use of an organic seed, cut and coupled to a strain gage. In principle, absorption of moisture in the seed results in distortion, which is converted to an electrical signal by the strain gage assembly. Reports on performance are mixed. Certainly the applications are limited, and the approach does not represent a technological advance. By contrast, the ***thin film capacitor,*** designed primarily for radiosonde applications, incorporates advanced technology (Suntola and Antson, 1973). Reports of users have been mixed, with a common complaint of poor performance in polluted atmospheres. The capacitor may still be considered a sensor for some research applications on towers.

2.5.1.1 Sensor Characteristics-Although the psychrometer is considered the most practical and widely used instrument for measuring humidity. two major problems are associated with wet and dry bulb psychrometry involving the accuracy of the thermometers and the cumulative errors related to operating technique (Quinn, 1968). An accuracy of ±1 percent at 23°C and 50 percent RH requires thermometers with relative accuracy of ±0.1°C. The commonly used 0.5°C division thermometers introduce an uncertainty of ±5 percent RH at this condition. This assumes that the readings were taken at the maximum wet bulb depression, a difficult task with a sling psychrometer.

It has long been recognized that there are some limitations in using the dew cell instrument (Acheson. 1962). The lowest relative humidity it can measure at a given temperature is the ratio of the vapor pressure of a saturated solution of LiCl to that of pure water. This is calculated to be 11.8 percent RH. A second limitation is that at -65.6°, -20.5°, +19.0°, and +94.0°C, LiCl in equilibrium with its saturated solution undergoes a phase change. Errors in dew point measurements occur at -69°, -39°, -12°, and +40°C. This problem is inherent in the use of LiCl and cannot be eliminated. It is estimated that the accuracy of the LiCl saturated salt technique is 1.5°C over the range of -30' to 30°C.

The optical chilled (cooled) mirror technique of measuring dew point is a fundamental measurement. No calibration is required for the fundamental dew generating process. The measurement however is the temperature of the surface at which the dew forms and as with any electrical temperature measurement system, calibration is required. The process of periodically heating the mirror to a temperature above the dew (or frost) point is followed by a balancing of the optical system to correct for changing the dry mirror reflectance that might result from contamination. In the better instruments, automatic balancing is programmable in terms of frequency and length of time. It can also be accomplished manually.

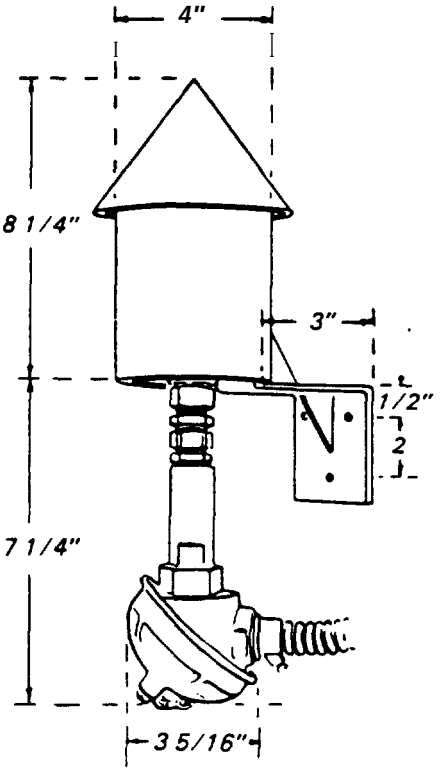

Figure 2.5.2. ***A typical Dewcel sensor housing and transmitter.***

2.5.1.2 Sensor Housings and Shields-Psychrometers of all types should be acclimated to the environmental conditions in which the measurements are to be made. In most cases, psychrometers should be stored in a standard instrument shelter so that the mass of the thermometers, and especially the mass of the housing, adjusts to the temperature of the air Psychrometers with a stored water supply, such as those on a tower, must be shielded from solar radiation

For meteorological applications, the dew cell element should be enclosed in a ***weatherhood*** to protect it from precipitation. wind, and radiation effects. This type of element functions best in still air. Some ***aspirated radiation shields*** are designed, in keeping with these specifications, to house both a temperature sensor, which requires ventilation. and a dew cell, which requires only the smallest amount of air flow (Figure 25.3). The miniaturization of the dew cell has created some problems related to excessive air flow and solar radiation that remain only partially solved.

All manufacturers of optical cooled-mirror dew point and temperature monitoring equipment provide housings for the sensors, which include forced ventilation and shielding from solar radiation.

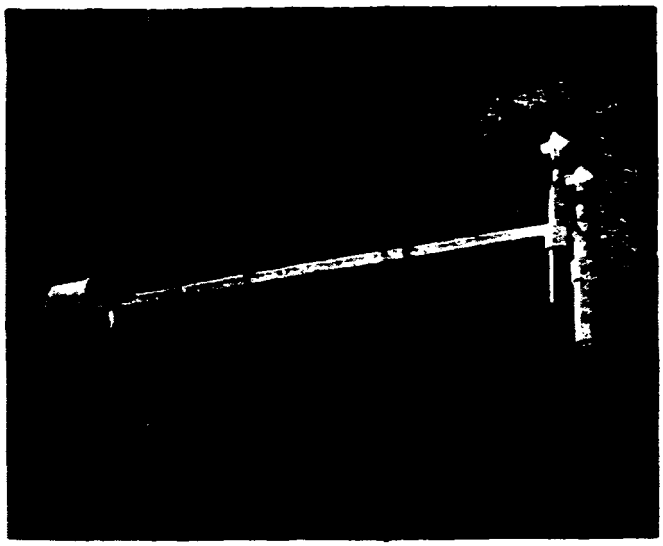

Figure 2.5.3. ***A pair of tower-mounted Gill aspirated radiation shields for housing temperature and dew point sensors (R.M. Young Co.).***

2.5.1.3 Data Requirements-Electrical hygrometers for monitoring applications have time constants generally longer than air temperature systems. The usual data of interest are hourly average values. Data should be reported in terms of the condition measured, dew point temperature. relative humidity or wet-bulb and dry-bulb temperature. Programs may be used which convert among these if all the relevant variables are known. The station elevation may be used to estimate a nominal pressure if a measurement is not available. The temperature needed to convert a relative humidity measurement to dew point temperature is that temperature at the relative humidity sensor surface. This may not be the same temperature as that measured at some other location. On the other hand, the dew point temperature is a fundamental measure of the amount of water vapor in the air and is independent of air temperature. Relative humidity calculations can therefore be made given the dew point temperature and any temperature measurement point in the same general air mass.

Psychrometers are convenient devices for making spot checks of the performance of other devices. especially those that are permanently installed, providing the checking is done under reasonably steady overcast conditions. The psychrometric technique built into tower installations presents servicing problems. especially at temperature extremes High temperatures cause rapid evaporation, and low temperatures cause freezing.

Both the dew cell and the cooled-mirror type instruments have applications on 10-meter or taller tower installations for pollution studies. providing the sensors are housed in the recommended shields with little. if any, aspiration for the dew cell and the recommended rate of aspiration for the cooled-mirror design is selected

2.5.2 Procurement

In purchasing a suitable humidity/dew point measuring system, follow the general guidelines advanced in Section 2.2 1, 'Instrument Procurement."

Sling psychrometers and aspirated psychrometers with thermometers shorter than 10 inches do not have sufficient resolution for the accuracies required for checking other instruments Equally important. the thermometers should have etched stems. i e .the scale markings should be etched on the glass Reliable thermometers are factory calibrated at a minimum of two temperatures, and usually at three. Thermometers calibrated with NBS-traceable standards are preferred

When patents expired on the original Dewcel, a number of similar units appeared on the market In light of problems which have existed in the past. it is prudent to specify accuracy of the humidity system when it is aperating as a system in the atmosphere Problems with ventilation rates will be quickly exposed by this requirement It is not recommended to purchase components to patch together in a system Corrosion in polluted atmospheres can be avoided by selecting optional 24-carat gold windings, provided cost is not prohibitive If dew point alone is to be measured the standard weatherhood is a proper choice If both temperature and dew point are to be measured. it may be advantageous to purchase a standard shield that provides a housing for the dew cell and a separate aspirated compartment for the temperature probe.

Optical cooled-mirror dew point systems are now available commercially from four manufacturers, all of which incorporate either linear thermistors or platinum resistance temperature devices.

2.5.3 Acceptance Testing

Follow the general guidelines set forth in Section 2.2.2, "Acceptance Testing" Test at least the ambient atmosphere at one point in normal wind and radiation

2.5.4 *Calibration*

Refer to the general notes in Section 2.2.3, "Calibrations." The procedure for calibrating the thermometers in a psychrometer is essentially the same as any thermometer calibration (see Section 2.4.4)

Both the dew cell and the cooled-mirror hygrometer can be checked for approximate calibration accuracy with a motor-operated psychrometer Their performance should be verified under stable conditions at night or under cloudy conditions during the day Several readings taken at the intake of the aspirator or shield are recommended Bench calibrations of these more sophisticated units must be made by the manufacturer The electronics portion of some instruments may be calibrated by substitution of known resistances in place of the temperature sensor This procedure. if appropriate is described in the manufacturer s operating manual for the instrument

0001457

2.5.5 *Installation*

Follow the general guidelines set forth in Section **2.2.6,** "Preparation for Field Installation" and in Section **3,** "Methods for Judging Suitability of Sensor Siting."

Dew point measuring equipment on a tower should be installed with the same considerations given to temperature sensors. Reference has already been made to the weatherhood as a shield for the dew cell and to an aspirated shield for the cooled-mirror instrument. At some installations, success has been reported in mounting these housings so that they are close to the tower framework on the north-facing side. This minimizes the effects of direct solar radiation and provides a rigid support, especially for the cooled-mirror sensor, which requires a stable mounting surface. Another consideration in mounting these devices inboard involves servicing. Inboard mounting makes recharging the dew cell with lithium chloride and cleaning the reflective surface of the cooled-mirror hygrometer much easier.

2.5.6 *Field Operation and Preventive Maintenance*

Note the guidelines in Section **2.2.5,** "Operational Checks and Preventive Maintenance."

Field calibration checks should be made at least monthly on dew cell type units. The use of gold wire windings around the LiCl cylinder minimizes corrosion problems in polluted atmospheres. Periodic removal and washing of old lithium chloride, followed by recharging with a fresh solution, improves data reliability.

Once a mercury or alcohol liquid-in-glass thermometer is calibrated, there is no need for recalibration. unless it is to be used for reference or as a transfer standard. Errors in wet bulb temperatures are most frequently the result of an improperly installed or dirty muslin wick, the repeated use of tap water instead of distilled water, or human error in reading. Wicking material used on psychrometers must be washed to remove traces of sizing and fingerprints. Once cleaned, the material is tied at the top of the thermometer bulb and a loop of thread placed around the bottom so the thermometer bulb is tightly covered. To prevent solid materials from collecting on the cloth and preventing proper evaporation, the wick should be wet with distilled water. Of course, slinging or motor aspiration should be done in the shade. away from reflected or scattered radiation. at a ventilation rate of about 3 to 5 m/s. Many technique-related errors are minimized by using an Assmann-type, motor-operated psychrometer, providing the instrument is allowed to assume near ambient conditions prior to use.

The cooled-mirror instruments require no calibration except for the minor temperature sensor. Depending on environmental conditions, the mirror is easily cleaned with a Q-Tip® dipped in the recommended cleaning fluid, usually a liquid with an alcohol base. While the accuracy of a psychrometer is inferior to that of the optical chilled mirror system, an occasional check at the intake to the sensor shield is recommended under the provisions specified earlier.

All operational and PM activities should be logged. Data retrieval will be dependent upon program objectives.

2.5.7 *Audit Procedures*

Refer to Section **2.2.4,** "Audits," for general guidelines. Instrument audit procedures for hygrometry systems follow calibration procedures. A systems audit should be performed near the beginning of a field measurement program.

The performance audit of a humidity measuring system should be based upon a comparison with a collocated transfer standard (CTS). Parts of the system can be tested by conventional electronic tests, but this avoids so much of the measurement process that it should only be used to augment the total system test. The CTS may be any qualified instrument. The most accurate type is the cooled-mirror dew point instrument. The Assmann-type psychrometer with calibrated thermometers traceable to NBS is acceptable for most data applications. It is also most convenient since it does not require commercial power and can be carried to elevated levels on a tower.

Given the qualifier that humidity is a very difficult measurement to make, a rule of thumb for judging the accuracy of a humidity monitoring system with an Assmann as the CTS is as follows: when the CTS and the challenged system agree in dew point temperature to within 1°C, the challenged system is assumed to be within 0.5°C of the true value. This arbitrarily assigns an uncertainty in dew point temperature of ±0.5°C for the Assmann which is true for most of the range,

2.6 Solar Radiation

2.6.1 *Introduction*

Solar energy is the driving force of large-scale atmospheric motion. indeed, of the general circulation of the atmosphere. Although air pollution investigators normally consider the measurement of solar radiation secondary to wind and temperature measurements. solar radiation is directly related to atmospheric stability. It is measured as total incoming global radiation, as outgoing reflected and terrestrial radiation and as net total radiation.

Quantitatively, solar radiation is described in units of energy flux, either W/m^2 or $cal/cm^2 \cdot min$. When measured in specific, narrow wavelength bands, solar radiation may be used to evaluate such air pollution indicators as turbidity, amount of precipitable water, and rates of photochemical reactions. However, this manual will cover only broadband measurements and sunshine.

The generic term, radiometer, refers to any instrument that measures radiation, regardless of wavelength. Shortwave radiation has wavelengths less than **4** micrometers (μm) and is subdivided as follows:

Ultraviolet (UV)	**0.20** μm to **0.38** μm
Visible	0.38 μm to 0.75 μm
Near-infrared	0.75 μm to 4.00 μm

The infrared (IR) radiation band from 4 μm to 100 μm is considered longwave radiation. The instruments most commonly used for environmental monitoring are discussed below.

Pyranometers are instruments that measure the solar radiation received from the hemisphertcal part of the atmosphere it sees, including the total sun and sky shortwave radiation (Figure **2.6.1**). Most pyranometers incorporate a thermopile as sensor. Others that measure a narrower, shortwave bandwidth, use a silicon photovoltaic cell as a sensor. The ***spectral pyranometer*** with two hemispherical domes is designed to measure sun and sky totally or in defined wavelengths. This is achieved by substituting one of several colored Schott glass filter domes for the clear glass outer dome.

Bimetallic recording pyranometers. also known as actinometers, were designed by Robitzsch of Germany. These mechanical sensors consist of two or three bimetallic strips, alternately painted black and white. that respectively absorb and reflect solar radiation The resulting differential heating produces a deformation that is transmitted mechanically through levers and a pen arm to a clock-wound drum recorder. Although of limited accuracy, these instruments are useful for locations with no commercial power.

Net radiometers or ***netpyrradiomerers*** are designed to measure the difference between downward and upward total radiation, including the total incoming shortwave and longwave radiation and the total outgoing shortwave and longwave radiation There are two basic types of net radiometers. The ventilated plate type, often referred to by the name

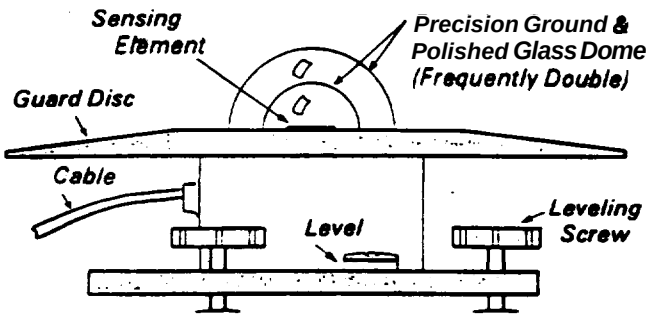

Figure 2.6.1. The features of a typical pyranometer (Carter, et al., 1977).

of the designers (Gier and Dunkle), is more popular in research applications than the type with hemispherical polyethylene domes originally designed by Funk. Both incorporate thermopiles with blackened surfaces. Because net radiometers produce a signal with a positive sign when the incoming radiation exceeds the outgoing, the recording equipment must be designed with an offset zero.

Sunshine recorders are designed to provide information on the hourly or daily duration of sunshine. Only one commercially available, off-the-shelf type of sunshine recorder is now available. This is the Campbell-Stokes design (Figure 2.6.2), designated as the interim reference sunshine recorder "IRSR" by the World Meteorological Organization. The device consists of a glass sphere 10cm in diameter mounted in a spherical bowl. The sun's rays are focused on a card that absorbs radiation and changes color in the presence of sunlight. The recorder is used infrequently in the United States but extensively abroad, primarily for the collection of climatological data. The National Weather Service routinely uses a Sunshine Switch, which incorporates one shaded photocell and one exposed photocell.

Figure 2.6.2. A Campbell-Stokes Sunshine recorder Department of the Army. 1975).

2.6.1.1 Instrument Characteristics- Only the characteristics of pyranometers and net radiometers, the two types of instruments used most frequently in pollution-related programs, will be discussed in this section.

Pyranometer Characteristics - The pyranometer is not to be confused with the pyrheliometer. "an instrument for measuring the intensity of direct solar radiation at normal incidence" (WMO, 1971). The pyrheliometer is mounted in a solar tracker, or equatorial mount, automatically pointing to the sun as it traverses from east to west (Figure 2.6.3). By contrast. the pyranometer is mounted facing toward the zenith Ideally, the response of the thermopile sensor in the pyranometer is proportional to the cosine of the angle of the solar beam and is constant at all azimuth angles. This characteristic is known as the Lambert Cosine Response, an important characteristic of pyranometers. For the majority of applications related to atmospheric pollution. Class 2 and Class 3 are satisfactory.

Net Radiometer Characteristics - Most net radiometers now available commercially are made with a small disc-shaped thermopile covered by polyethylene hemispheres. In most units the material used for shielding the element from the wind and weather is very thin and is transparent to wavelengths of 0.3 to 60 μm. Until recently, the internal ventitation and positive pressure required to maintain the hemispheres of net radiometers in their proper shape was considered critical; however, new designs have eliminated this problem. The plate-type net radiometer, most often the modified Gier and Dunkle design sold commercially in the United States, is occasionally used in routine air pollution investigations. The thermopile heat flow transducer is blackened with a material that is easily cleaned with water or naphtha. Because the thermopile is uncovered for total spectrum response. a built-in blower, available for operation on 115 V 50/60 Hz or 12 V d.c., draws air across the element at a constant rate eliminating the effects of varying natural winds. The device is temperature-compensated and typically has a sensitivity of 2.2 μV per W/m^2, a response time of 10 seconds, and a "relative" accuracy of two percent in calibration. When supplied with a reflective shield on its lower surface, this plate type net radiometer of the Gier and Dunkle design becomes a total hemispherical radiometer or unshielded pyranometer

2.6.1.2 Recorders and Integrators for Pyranometers and Net Radiometers - The relatively high impedance and low signal of thermopile sensors. excluding silicon photovoltaic cells, limits their use with both indicating meters and recording meters. Electronic strip chart ***millivolt potentiometric recorders*** incorporating variable-range rheostats are preferred. The variable-range rheostat permits the exact matching of the recorder scale to interchangeable sensors so that deflections of the meter represent engineering units. i.e., W/m^2, $cal/cm^2 \cdot min$, etc. The alternative is a standard millivolt-meter potentiometric recorder where the data. in millivolts. must be translated to units of energy, corresponding to full-scale values of 1370 W/m^2 or 1.96 $cal/cm^2 \cdot min$. With some sensors, it is necessary to use a preamplifier to increase the level of the signal. It may also be necessary. especially if the signal is to be used as an input to a computer, to combine preamplification with scaling.

2.6.2 ***Procurement***

In purchasing a solar radiation measurement system. follow the general guidelines advanced in Section 2.2 1 'Instrument Procurement." Many types of radiation instruments have been developed, especially in recent years because of an increasing interest in environmental considerations (Gates. 1962). meteorological research (Monteith. 1972). and solar energy (Carter. et

0001458

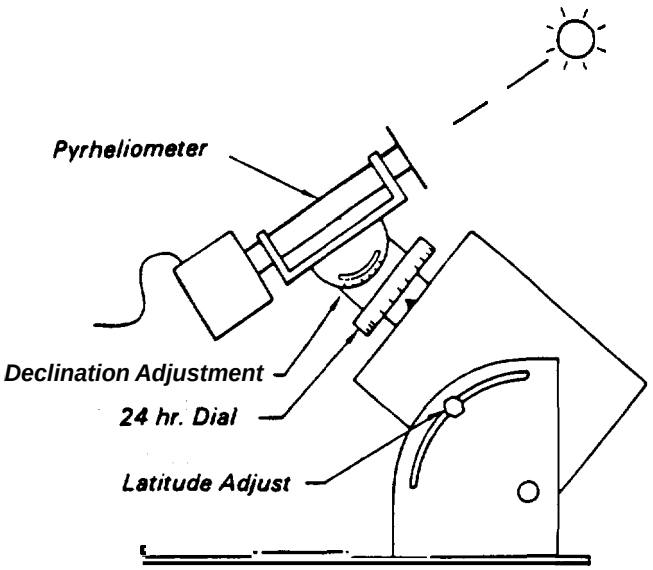

Figure 2.6.3. *Features of a typical pyrheliometer and tracking mount (Carter et al., 1977).*

al., 1977). Except for special studies, the requirements for relating radiation to stability can be satisfied by purchasing sensors of Class 2 or Class 3 as identified by the WMO. Class 2 sensors offer the advantage of providing data comparable to that collected at National Weather Service stations and at key locations of DOE. The sensors to be specified should be commercially available, field proven by the manufacturer for several years, and have the technical requirements established by WMO standards. An American Society for Testing and Materials (ASTM) standard is now under consideration. When purchasing a recorder or integrator, one must match the calibration factor or sensitivity of the sensor to the readout equipment. It must be recognized that the signals from net radiometers, in contrast to pyranometers, require zero-offset capability to accommodate both negative and positive voltage outputs.

2.6.3 Acceptance Testing

Follow the general guidelines set forth in Section 2.2.2, "Acceptance Testing." Physical inspection of the relatively fragile pyranometers or net radiometers immediately after delivery of the instrument is important. One must be sure that the calibration data have been received and that the data correspond to the serial number of the instrument. Storage of this information will prove helpful when the time comes to have the calibration of the instrument checked, or to replace the sensor or readout device. Few organizations are equipped or staffed to bench-test a radiometer to verify calibration, but a quick determination can be made indoors as to whether the sensor and recorder or integrator system is operating by exposing the sensor to the light of a tungsten lamp. It may be necessary to place the instrument fairly close to the lamp. Covering the sensor for several hours will ensure that the system is not "dark counting."

2.6.4 *Calibration*

Refer to the general notes in Section 2.2.3, "Calibrations." The user of a pyranometer or net radiometer is normally not equipped to calibrate the sensor. The best the user can do is to perform field calibration checks on two clear sky days. These checks involve a side-by-side comparison of the sensor to a sensor of similar design, the calibration of which can be traced to a transfer standard. The primary standard pyrheliometer is an instrument selected by an international committee. It was made by Jet Propulsion Lab. (JPL) where custody is maintained. If this is not possible, the device should be returned to the manufacturer or to a laboratory with the facilities to check the calibration. The frequency of making comparative readings or having factory calibrations will depend on environmental conditions. Most certainly, any indication of discoloration or peeling of the blackened surface or of scratches on the hemispheres of a pyranometer warrants recalibration and/or service.

Net radiometers are more delicate and require more frequent attention than pyranometers. Pyranometers of high quality in a clean atmosphere may require recalibration at 2-year intervals; net radiometers should be recalibrated at least yearly. Calibrating the recorder or integrator is an easy task. The standard method involves the use of a precision potentiometer to impress known voltages into the circuit. The linearity of the readout instrument may be checked by introducing a series of voltages covering the full scale, checking first up-scale and then downscale Adjustments should be made as necessary. In the absence of a precision potentiometer, it may be possible to introduce a calibrated millivolt source that covers one or two points. Integrators can be checked the same way, except that the input value must also be timed.

2.6.5 Installation

Follow the general guidelines set forth in Section 2.2.6, "Preparation for Field Installation." The site selected for an upward-looking pyranometer should be free from any obstruction above the plane of the sensor and should be readily accessible for cleaning and maintenance. It should be located so that no shadows will be cast on the device, so that it is not too close to light-colored walls or other objects likely to reflect sunlight. and so that it is not exposed to artificial radiation sources A flat roof is usually a good choice: but if such a site is not possible, a rigid stand with a horizontal surface some distance from buildings or other obstructions should be used. A site survey of the angular elevation above the plane of the radiometer surface should be made through 360 degrees (The Eppley Laboratory, Inc.).

Table 2.6.1. ***Classification of Pyranometers According to Physical Response Characteristics***

	Sensitivity (mW/cm²)	Temperature (%)	Linearity (%)	Time Const (max)	Cosine Resp (%)
1st Class	±0.7	±1	±1	25 s	±3 0
2nd Class	±0 5	±2	±2	1 m	±5 7
3rd Class	±1.0	±5	±3	4 m	±10

The same procedures and precautions should be followed for net radiometers that are both upward- and downward-looking. However, the instrument must be supported on an arm extending from a vertical support about 1 m above the ground. Except for net radiometers with heavy-duty domes, which are installed with a desiccant tube in series with the sensor chamber, most other hemispherical net radiometers require the positive pressure of a gas—usually nitrogen—to both maintain the shape of the polyethylene domes and purge the are8 surrounding the thermopile. In one increasingly popular design, there is a requirement for internal purging with nitrogen and external ventilation with compressed air through holes on the frame. The compressed air supply minimizes fogging and condensation.

Precautions must be taken to avoid subjecting radiometers to mechanical shock during installation. They should be installed securely and leveled using the circular spirit level attached to the instrument. Net radiometers are difficult to mount and to maintain free of vibration. Pyranometers of the Moll-Gorzynski design, used extensively by Atmospheric Environmental Sciences (AES) of Canada, are oriented so that the emerging leads face north (Figure 2.6.4). This minimizes solar heat on the electrical connections of an instrument that is not temperature compensated. The thermopiles of these instruments should be oriented so that the long side of the thermopile points east and west (Latimer, 1972). The cable used to connect the pyranometer to the readout device, recorder, or integrator should be between 16 and 20 gauge and made of shielded, waterproofed 2-conductor copper wire. The sensor, shield, and readout device should be connected to a common ground. Potentiometric millivolt recorders are to be used with most high-impedance. low-signal thermopile radiometers. Cable lengths of 300 m or more are practical. Galvanometric recorders can be used with silicon cell radiometers. Soldered, copper-to-copper junctions between instrument connectors and/or cables are essential. Pyranographs or actinographs should be installed on a level surface immune to shadows. These instruments should be placed in such a way that the sensitive bimetallic strips lie within 2 degrees of true east and west with the glass inspection window facing north.

2.6.6 Field Operation of a Solar Radiation System

As part of the quality assurance program, a field calibration check should be performed at least once every 6 months according to the procedures outlined in Section 2.6.4. Solar radiation instruments require almost daily attention. The data should be inspected for a reasonable diurnal pattern and the absence of dark counting. Where strip chart or digital printers are used, daily time checks are desirable. Data retrieval will depend upon program objectives; but even for climatological programs, data should be collected monthly. All operational activities during a site visit should be logged.

2.6.7 Preventive Maintenance

All types of radiometers require frequent cleaning to remove any material deposited on the surface that will intercept the radiation In most cases, this is a daily operation The outer hemsphere should be wiped clean and dry with a lint-free soft cloth Any scratching of the surface will alter the transmission properties of the glass. so cleaning must be done with care If frozen snow, glazed ice. hoarfrost or rime ice is present, an attempt should be made to remove the deposit carefully with warmed cloths

Should the internal surface of a pyranometer's outer hemisphere become coated with moisture, it can be cleaned by carefully removing the outer hemisphere on a dry day and allowing the air to evaporate the moisture If removal of a hemisphere exposes the thermopile element, extreme care should be taken because it is fragile and easily damaged About once each month, the desiccant installed in most pyranometers should be inspected Whenever the silica gel drying agent is pink or white instead of blue, it should be replaced or rejuvenated by drying it out on a pan in 135°C oven The level should be checked after each servicing of the radiometer. or at least monthly Significant errors can result from misalignment

Net radiometers require more frequent maintenance attention than pyranometers It is necessary to replace the polyethylene domes as often as twice a year or more before the domes become discolored. distorted, or cracked More frequent replacement is necessary in polluted environments due to accelerated degradation of plastic hemispheres when exposed to pollutants A daily maintenance schedule is essential to check on the proper flow of gas in instruments that are inflated and purged with nitrogen All PM activities should be recorded in a log

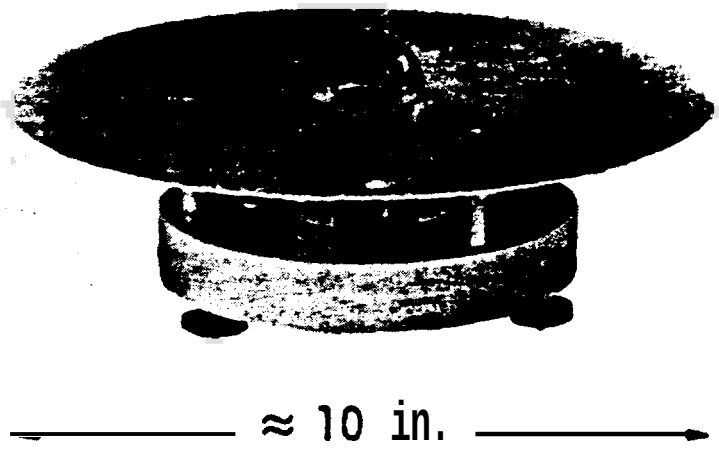

Figure 2.6.4. A Moll-Gorczynski solartmeter (Department of the Army. 1975)

2.6.0 Audit Procedures

Refer to Section 2.2 4. "'Audits." for general guidelines A performance audit on a solar radiation system is only practical with a CTS The CTS must have the spectral response and exposure equivalent to the instrument being audited. One diurnal cycle will establish an estimate of accuracy sufficient for most air quality monitoring applications The method of reporting the data from the monitoring instrument (daily integrated value. hourly integrated value, average intensity per hour, etc) must be used in reducing the data from the CTS to provide a meaningful comparison An audit frequency of at least six months is recommended

0001459

2.7 Precipitation Measurements

2.7.1 *Introduction*

By definition, "The total amount of precipitation which reaches the ground in a stated period is expressed as the depth to which it would cover a horizontal projection of the earth's surface if there were no loss by evaporation or run-off and if any part of the precipitation falling as snow or ice were melted" (WMO, 1969). In any method of precipitation measurement, the aim should be to obtain a sample that is representative of the fall in the area. At the outset, it should be recognized that the extrapolation of precipitation amounts from a single location to represent an entire region is an assumption that is statistically questionable. A network of stations with a density suitable to the investigation is preferable.

Precipitation collectors are of two basic types: nonrecording and recording..

Nonrecording Gages - In its simplest form, a precipitation gage consists of a cylinder, such as a can with straight sides. closed at one end and open at the other. The depth of the liquid in the can can be measured with a measuring stick calibrated in subdivisions of centimeters or inches (Figure 2.7.1).

To obtain greater resolution. as in the case of the standard 8-inch gage made to NWS Specification No. 450.2301, the gage is constructed with a ratio of 10:1 between the area of the outside collectorcylinder and the inside measuring tube. The funnel attached to the collector both directs the precipitation into the tube and minimizes evaporation loss. Amounts in excess of two inches of rainfall overflow into the outer can, and all measurements of liquid and melted precipitation are made in the measuring tube with a measuring stick

The automatic wet/dry precipitation collector, available in several designs, represents a specialized nonrecording instrument designed for programs involving the chemical and/or radioactive analysis of precipitation. The collector is built with a sensor that detects the onset and cessation of precipitation and automatically releases a lid to open and cover the collector. In one design, the lid can be made to remain open during either wet or dry periods Another model is made with two collectors; the lid is made to cover the bucket during periods of rain and snow (Figure 2.7.2) In equipment of this kind involving precipitation chemistry the volume of water in proportion to the constituents collected with the water is important, so evaporation must be kept to a minimum

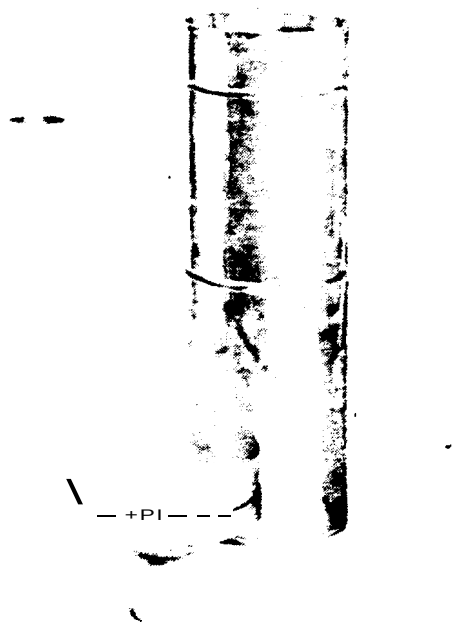

Figure 2.7.1. A typical standard rain gage (Belfort Instrument Company)

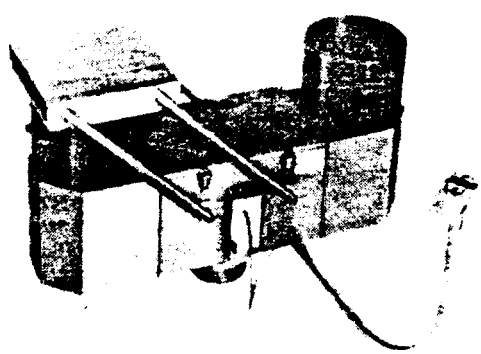

Figure 2.7.2. Automatic wet/dry precipitation collector

Recording Gages - Recording gages are of two basic designs based on their operating principles the weighing-type gage and the tipping oucket-type gage (Figure 2 7 3) The former when made to NWS Specification No 450 2201 is known as the Universal gage indicating usage for both liquid and frozen precipitation There are options for the remote transmission of signals from this type of gage The standard National Weather Service Tipping Bucket Rain Gage is designed with a 12-inch collector funnel that directs the precipitation to a small outlet directly over two equal compartments. or buckets which tilt in sequence with each 001 inches of rainfall The motion of the buckets causes a mercury switch closure Normally operated on 6 V c [illegible] the contact closure can be monitored on visual counter and or one of several recorders The digital-type impulse can also be used with computer-compatible equipment

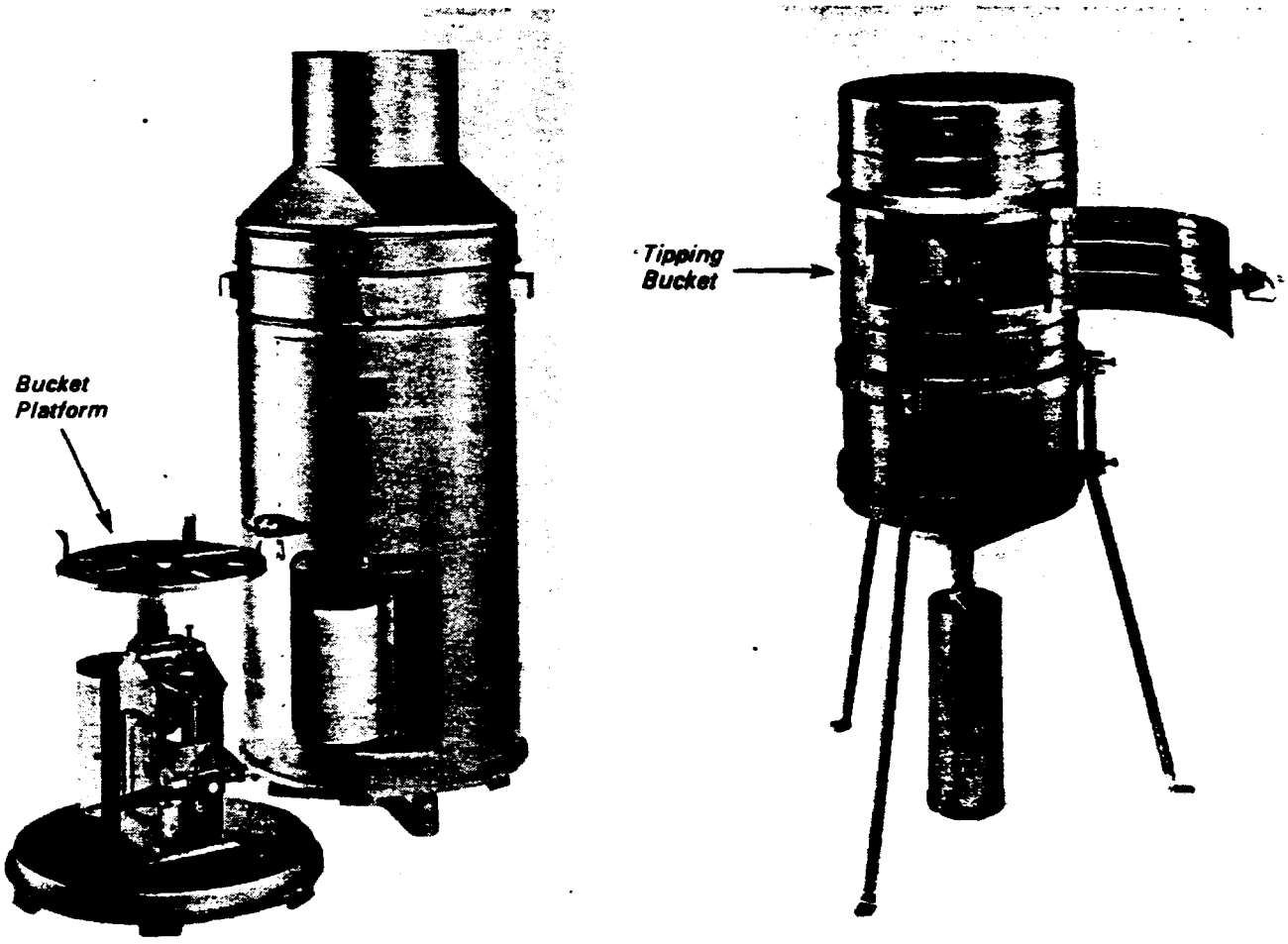

Figure 2.7.3. A typical weighing rain gage (left) and typical tipping bucket rain gage (Belfort Instrument Company).

2.7.1.1 Instrument Characteristics - The most accurate precipitation gage is the indicating-type gage However, the recording-type gage measures the time of beginning and ending of rainfall and rate of fall. The Universal weighing gage incorporates a chart drum that is made to rotate by either an 8-day spring-wound clock or a battery-powered clack. Recent developments include a unit with a quartz crystal mechanism with gear shafts for. a wide range of rotation periods from half a day to one month

The weighing gage is sometimes identified by the name of its designer (Fergusson) and comes with one of two recording mechanisms In the single traverse unit. the pen moves from the base of the drum to the top, typically a water equivalent of 6 inches In a dual traverse unit. the pen moves up and then down for a total of 12 inches of precipitatton A variation of the weighing gage, a "high capacity' design with dual traverse, will collect as much as 760 mm or 30 inches To minimize the oscillations incurred by strong winds on the balance mechanism, weighing gages are fitted with a damper immersed in silicone fluid. By incorporating a potentiometer in the mechanism, the gage becomes a remote transmitting unit, capable of providing a resistance or, as another refinement, a voltage proportional to the amount of precipitation collected. Linearity of response is usually a factory adjustment involving the use of calibrated weights to simulate precipitation amounts. In spite of manufacturer's specifications, it is doubtful that the gage can resolve 0.01 inches, especially when the bucket is nearly empty.

In the tipping bucket gage, the balance of the buckets and the leveling of the bucket frame are critical. Low voltage at the gage is imperative for reasons of safety. Power is typically 6 V d.c.. The signal is provided by a switch closure each time the bucket assembly tips (0.01 inches of rainfall per bucket) Rain rates are calculated from an evenr recorder with pens energized sequentially to improve resolution. The tipping bucket (a mechanical device) takes time to tilt from one position to the next When the rate of fall is high. there is spillage and the unmeasured precipitation falls into the reservoir Where there is a need for greater accuracy, the collected water is measured manually and excess amounts are allocated proportionately in the record The accuracy of the gage is given as 1 percent for rainfall rates of 1 in/hr or less; 4 percent for rates of 3 in/hr; and 6 percent for rates up to 6 in/hr

2.7.1.2 Windshields and Heaters - Accuracy of measurement for all types of gager is influenced perhaps more by exposure than by variations in design Windshields represent an essential accessory to improve the catch of precipitation. especially snow in windy conditions The improved Alter design. made of 32 free-swinging but separated leaves supported 1/2 inch above the level of the gage collecting orifice is an effective way to improve the catch In a comparison of shielded and unshielded

0001460

8-inch gages, it has been shown that at a wind speed of 5 mph, the efficiency of the unshielded gage decreases by 25 percent, and at 10 mph, the efficiency of the gage decreases by 40 percent (Weiss. 1961).

In below freezing conditions when the catch in a gage is snow or some other form of solid precipitation, it is necessary to remove the collector/ funnel of nonrecording gages and the funnel in recording gages. Some instruments are available with built-in heater elements that are thermostatically controlled. An effective heater for conditions that are not too severe is an incandescent lamp installed in the housing of the gage. Caution should be exercised. however, as too great a heat will result in evaporative loss.

2.7.1.3 Precipitation Data Requirements-In research studies, especially those related to acid rain, the instrument used most frequently is the Automatic Precipitation Collector with one or two collecting buckets and a cover to prevent evaporation. In operational activities, the choice is between the weighing gage and the tipping bucket gage. For climatological surveys, the choice might include one of the above gages as well as a nonrecording type gage. The use of a windshield is recommended to minimize the errors that result from windy conditions if the application requires maximum accuracy.

The precipitation measurement made in air quality monitoring stations is frequently used for descriptive purposes or for episodal analysis. If the effort required to achieve the level of accuracy specified by most manufacturers of electrical recording gages is more than the application of the data can justify, a tolerance of 10 percent may be adequate.

2.7.2 Procurement

In purchasing a suitable precipitation measuring sytem, follow the general guidelines set forth in Section 2.2.1, 'Instrument Procurement." A variety of gages are available commercially. In general, the standards established by NWS specifications result in the fewest problems. For example, there are numerous 8-inch gages available, but those following NWS specifications are made only of brass and copper, are more durable, and are reported to rupture less frequently under extended freezing conditions than those made of galvanized steel

The procurement of a weighing-type gage should include a tripod mounting base as well as a set of calibration weights For locations that may not be readily accessible. or for locations with heavy precipitation, the bucket of the weighing gage should have an overflow tube. If the resolution of time is not too important, recording rain gages of the drum type can be obtained with monthly rather than weekly mechanisms. Unless the tipping bucket gage is equipped with a heater, it is of no use for frozen precipitation.

2.7.3 Acceptance Testing

Follow the general guidelines advanced in Section 2.2.2, "Acceptance Testing." Except for visual inspection, nonrecording gages do not require acceptance testing. The weighing gages should be assembled and given a quick "bench-top" calibration check using standard weights or a measured volume of water. In addition, the clock mechanism supplied with the gage should be checked for at least a couple of days, preferably a week. The tipping bucket gage should also be bench tested, primarily to be certain that the bucket mechanism assembly is balanced and that the switch is operational.

2.7.4 Calibration

Bench calibrations should follow the recommendation of the manufacturer. The electrical output gage or the drum recording gage measures weight, whether total weight in the case of the "weighing gage" or increments of weight in the case of the tipping bucket gage. Density of water is assumed so the weight can be expressed in units of volume or depth assuming the area of the collector opening. Calibrations of the measurement apparatus can be based upon the introduction of known volumes of water. For rate-sensitive systems such as the tipping bucket, the rate of simulated precipitation should be kept less than one inch per hour Calibrations require properly leveled weighing systems (gages) whether on the bench or in the field.

2.7.5 *Installation*

Follow the general guidelines set forth in Section 2.2.6, "Preparation for Field Installation," and siring guidance described in Section 3.

The support, or base, of any gage must be firmly anchored. preferably on a level surface *so* that the sides of the gage are vertical and the collector is horizontal. The collector can be checked with a carpenter's level placed at two intersecting positions. The level of the bucket assembly on the tipping bucket gage is also critical and should also be checked along its length'and width

Once the weighing gage is installed. the silicone fluid should be poured into the damping cylinder as required. The pen of the drum recording type is inked to less than capacity because the ink used is hygroscopic and expands with increasing humidity. easily spilling over on the chart. The final calibration check with standard weights or suitable substitute should be made at this time. To check the operation of the tipping bucket, the best approach is to put a known quantity of water in a can with a small hole so that the slow flow can be timed. It may be necessary to adjust the set screws, which act as limits to the travel of the tilting buckets. The average of a minimum of ten tips should be used. Adjustment is required if a 10 percent or greater error is found or if greater accuracy is needed.

2.7.6 *Field* Operation of a Precipitation Measurement System

Calibration checks for weighing and tipping bucket gages using the techniques described above are recommended at 6-month intervals. Nonrecording gages, whether alone or in a network, should be read daily at a standard time.

Although the weighing gage is used for liquid and frozen precipitation, it requires some special attention for winter operations. First. the funnel must be removed when snow is expected. Second, the bucket must be charged with an antifreeze, 24 oz of ethylene glycol mixed with 8 oz of oil. The weight of this mixture represents the baseline from which precipitation amounts are to be-noted. The bucket should be emptied and recharged when necessary, at about 5 inches in the Universal gage, and at about 10 inches in the punched tape gage. All operational activities should be recorded in the station log

2.7.7 Preventive Maintenance

Possible leaks in the measuring tube or the overflow container of the gage are easily checked The receptacles are partially filled with water colored with red ink and placed over a piece of newspaper This procedure is especially applicable to the clear plastic 4-inch gage which is more easily damaged Repairs are performed by soldering the 8-inch gage and by applying a solvent to the plastic

A number of pens, some with greater capacity than others, can be used with the Universal gage All require occasional cleaning. including a good soaking and wiping in a mixture of water and detergent After inking problems. the next source of trouble is the chart drive; but these problems can sometimes be avoided by having the clock drive lubricated for the environmental conditions expected It is a good practice to have spare clocks in stock

Routine visual checks of the performance of weighing type gages should

be made every time there is a chart change. The time and date of change, and site location should be documented. Routine maintenance should include inking the pen and winding the clock. Battery-powered chart drives will require periodic replacement of batteries based on either experience or manufacturer's recommendations. All PM activities should be logged.

2.7.8 *Audit Procedures*

Refer to Section 2.2.4, "Audits." for general guidelines. Audits on precipitation measuring systems need be no more frequent than every 6 months. The irregular Occurrence of precipitation makes the use of a CTS impractical. The performance audit should depend upon the challenging of the gage with amounts of water known to an accuracy of at least 1 percent of the total to be used. This method will provide an accuracy of the measurement system but not the collection efficiency of the gage in natural precipitation. for tipping bucket gages use a rate of less than one inch per hour and an amount which will cause a minimum of ten tips.

for weighing gages, it is more convenient to use calibration weights to challenge the weighing mechanism rather than using the gallons of water necessary for full scale testing.

Section 3.0
Methods for Judging Suitability of Sensor Siting

3.1 Introduction

Although good instrumentation is a necessity, proper site selection is critical to obtain good meteorological data. It is, from an absolute error point of view, much more important than proper placement of any other kind of air monitoring equipment. Poor placement can and has caused errors of 180° in wind direction, and can cause major errors in any other meteorological variable, including wind speed. temperature, humidity, and solar radiation.

The purpose of this section is to offer guidance in assessing the suitability of meteorological monitoring sites. The guidance given is based principally on standards set by the World Meteorological Organization (WMO, 1971) and Federal agencies involved in meteorological data collection (U.S. National Weather Service [NWS] and the Tennessee Valley Authority [TVA, 1977]).

Proper siting is part of the total quality control program. Of course, as in many other monitoring activities, the ideal may not be attainable and, in many urban areas where air quality studies are traditionally done, it will be impossible to find sites that meet all of the siting criteria. In those cases, compromises must be made. The important thing to realize is that the data will be compromised, but not necessarily in a random way. It is incumbent upon the agency gathering the data to describe carefully the deficiencies in the site and, if possible, quantify or at least evaluate the probable consequences to the data.

3.2 Instrument Siting

The primary objective of instrument siting is to place the instrument in a location where it. can make precise measurements that are representative of the general state of the atmosphere in that area. Because most atmospheric properties change dramatically with height and surroundtngs, certain somewhat arbitrary conventions must be observed so that measurements can be compared. In this section, conventions published by the World Meteorological Organization (WMO, 1971) have been adopted wherever possible

Secondary considerations such as accessibility and security must be taken into account, but should not be allowed to compromise data quality

3.2.1 *Wind Speed and Direction*

"The standard exposure of wind instruments over level, open terrain is 10 m above the ground" (WMO, 1971). Open terrain is defined as an area where the distance between the instrument and any obstruction is at least ten (10) times the height of that obstruction. An obstruction may be man-made (such as a building) or natural (such as a tree) (Figure 3.2.1).

The wind instrument should be securely mounted on a mast that will not twist, rotate, or sway.

If it is necessary to mount the wind instrument on a roof of a building, it should be mounted high enough to be out of the area in which the air flow is disturbed by the building. This is usually 1.5 times the height of the building. If it is impossible to obtain the proper unobstructed exposure through horizontal relocation of the measurement site, it may be necessary to raise the height of the instrument so that it is out of the wake of the obstruction. This is not a good practice, however, and should only be resorted to when absolutely necessary. Sensor height and its height above obstructions, as well as the character of nearby obstructions, should be documented.

3.2.2 *Temperature and Humidity*

Temperature and humidity sensors should be mounted over a plot of open level ground at least 9 meters in diameter. The ground surface should be covered with short grass or, in areas where grass does not grow, natural earth. The surface must *not* be concrete or asphalt. The standard height for climatological purposes is 1.25 to 2 m, but different heights may frequently be required in air quality studies.

The sensors should not be closer to obstructions such as trees and/or buildings than a distance equal to four times their height. They should be at least 30 m from large paved areas and not close to steep slopes, ridges, or hollows. Areas of standing water should also be avoided.

Louvered instrument shelters should be oriented with the door opening toward true north.

3.2.3 *Radiation*

Solar and whole sky radiation measurements should be taken in a location free from any obstruction to the mea-

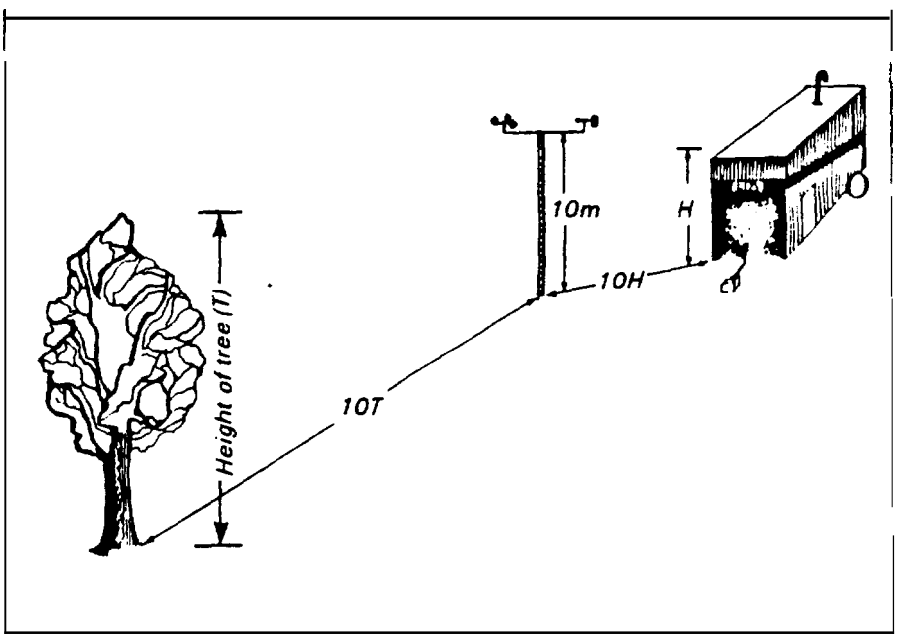

Figure 3.2.1. Siting wind instruments: a 10-m tower. located at least 10 times the height of obstructions away from those obstructions (not to scale).

surements. This means there should be nothing above the horizontal plans of the sensing element that would cast a shadow on it. Neither should the instrument be near light colored walls or artificial sources of radiation. Usually a tall platform or roof of a building is the most suitable location.

3.2.4 *Precipitation*

A rain gage should be mounted *on* level ground so that the mouth or opening is horizontal. The gage should be shielded from the wind but not put in an area where there will be excessive turbulence caused by the shield. For example, a *good* location would be an opening in an orchard or grove of trees where the wind speed near the ground is reduced due to the canopy effect, but a location that is mostly open except for one or two trees would not be good because of the strong eddies that could be set up by the trees. This admittedly requires a good deal of subjective judgment but it cannot be avoided. Obstructions to the wind should not be closer than two to four times the obstruction height from the instrument.

In open areas, a wind shield such as that used by the U.S. National Weather Service should be used.

The ground surface around the rain gage may be natural vegetation or gravel. It should not be paved, as this may cause splashing into the gage. The gage should be mounted a minimum of 30 cm above the ground and should be high enough so that it will not be covered by snow.

3.2.5 *Meteorological Towers*

It is frequently necessary to measure some meteorological variables at more than one height. For continuous measurements or where the height requirement is not too restrictive, towers may offer the most advantageous measurement platform.

Towers should be located in an open level area (see Table 3.2.1) representative of the area under study. In terrain with significant topographic features, different levels of the tower may be under the influence of different meteorological regimes at the same time. Such regimes should be well documented.

Towers should be of the open grid type of construction, such as is typical of most television and radio broadcast towers. Enclosed towers, stacks. water storage tanks, grain elevators, cooling towers, and similar structures should not be used (Mollo-Christensen, 1979). Towers must be rugged enough so that they may be safely climbed to install and service the instruments. Folding or collapsible towers that require the instruments to be serviced or calibrated at the ground are not acceptable because they are usually not rigid enough to ensure that the instruments will be in the proper orientation.

Instruments should be mounted *on* booms projecting horizontally out from the tower. Wind instruments should be mounted on a boom that will hold it a distance equal to twice the maximum diameter or diagonal of the tower away from the nearest point *on* the tower. The boom should project into the prevailing wind (e.g., toward the north if the prevailing wind is from the north) if this can be done ambiguously. One may wish to consider having two sets of instruments at each level, located *on* opposite sides of the tower. A simple automatic switch can choose which set of data to use (NASA. 1968). Documentation of the tower should include the orientation of the booms.

Temperature sensors must be mounted on booms to hold them away from the tower. but a boom length equal to the diameter of the tower is sufficient. Temperature sensors should have downward facing aspirated shields.

The booms must be strong enough so that they will not sway or vibrate excessively in strong winds. The best vertical location on the tower for the sensors is at a point with a minimum number of diagonal cross members. and away from major horizontal cross members. Even with these precautions. data obtained while the wind blows from the sector transected by the tower may not be free from error.

These instrument siting suggestions may seem to preclude the use of many air monitoring sites that otherwise would be desirable, but this need not be the case. In siting air quality monitors that are to be used for long-term trend analysis or large geographic area coverage, it may be perfectly acceptable to have some or all of the meteorological equipment at a different location that better meets the large-scale requirements of the study. As long as both sites are in the same area of interest and meet their respective siting criteria, this should present no problems. When the air quality data are to be used for short-term diffusion model validation or studies or short-term levels from specific sources. however, a meteorological station should be located in the vicinity of the air quality sensor.

3.3 Station Siting

Besides care in selecting the local environment of a meteorological sensor. it is important that care be taken in selecting station location with respect to major man-made and topographic features such as cities. mountains, large bodies of water, etc. Meteorological variables are obviously affected by the large-scale surrounding features The effect of cities has been studied extensively (Ito, 1972; Vukovich, 1971, US PHS, 1961). Documented effects include a decrease in an average wind speed, decrease in atmospheric stability, increase in turbulence, increase in temperature. and changes in precipitation patterns These changes will obviously have an effect on the evaluation and interpretation of meteorological and air quality data taken in an urban area.

Even more pronounced are the effects of large natural features (Slade, 1968) Besides their obvious effect on humidity. Oceans and large bodies of water are usually at a different temperature than the nearby land This generates the well known land- and sea-breezes which, in many coastal areas, dominate the wind patterns There are also often simultaneous differences in cloud cover between the oceans and nearby land surfaces This difference in thermal lag. insolation. and changes in surface roughness and vertical temperature structure can have a profound effect on atmospheric stability (SethuRaman 1974)

The effects of mountains and valleys on meteorological variables and atmospheric dispersion continue to be studied Two of the more interesting recent papers are by Kao (1974) and Hunt (1978) Well-known effects include the channeling of flow up or down a valley, the creation of drainage flow the

Table 3.2.1. *Limits on Terrain and Obstacles Near. Towers*

Distance from tower (m)	*Slope (no greater than) (%)*	*Max. obstruction or vegetation height (m)*
0-15	*±2*	*0 3*
15-30	*±3*	*0 5-1 0 (most veg <0 3)*
30-100	*±7*	*3 0*
100-300	*±11*	*10 x ht must be less than distance to obstruction*

Source TVA. 1977

establishment of lee-waves, and an increase in mechanically generated turbulence. All of these effects and others can play a major role in the transport and dispersion of pollutants.

The important point is that almost any physical object has an effect upon atmospheric motion. In fact, it is probably impossible to find a site that is completely free from obstruction. This being the case, it is the responsibility of the person choosing a monitoring site to have in mind the various forces at work and to choose a site that will be most representative of the area of interest. If the area is a valley or a sea coast, then the meteorological instruments should be in that valley or near the coast; not on a nearby hilltop or inland 30 km at a more convenient airport site. Of course one must also keep in mind the vertical structure of the atmosphere. Winds measured at the bottom of a 100 m valley will not represent the winds at the top of a 200 m stack whose base happens to be in that valley.

The choice of a station for meteorological data collection must be made with a complete understanding of the large-scale geographic area, the sources being investigated. and the potential uses of the data. Then rational, informed choices can be made.

Once they are made, the site should be completely documented. This should include both small- and large-scale site descriptions, local and topographic maps (1:24,000 scale), photographs of the site (if possible), and a written description of the area that is adequately represented by this site. This last point is most important for it will allow a more rational interpretation of the data. It might state, for example. that a site adequately represents a certain section of a particular valley, the suburban part of a given city, or several rural counties. Whatever it is, the nature of the site should be clearly described in a way that will be clear to those who will be using the data in the future.

Section 4.0
Meteorological Data Validation

4.1 Methods

Once dam are collected, they should be reviewed to screen out possible incorrect data points before they are put into accessible storage or passed on to the user. While the purpose of a QA program is to avoid the generation of bad data, it is impossible to do so completely. Even in the best planned and best conducted programs, undetected errors can be generated by faulty equipment, noisy data transmission lines. faulty key punching, and a myriad of other sources. Filippov (1968) offers a detailed and thorough discussion of the various possible sources of error.

In both automatic (ADP) and manual data screening the most obvious checks should be performed first. These include such things as being sure that the data exist and are properly identified, the forms or files are filled out properly, that numbers are in the blocks where they should be, letters are where they should be, and blanks exist where nothing should be. This sort of data editing is a subject unto itself and will not be pursued here.

Methods of editing or screening meteorological data usually involve comparison of the measured value with some expected value or range of values. Techniques for checking the measured value usually fall into one or more of the following categories:

1. Comparison with upper and/or lower limit on the allowed range of the data;
2. Comparison with known statistical distribution of !he data;
3. Comparison with spatial and/or temporal data fields; and
4. Comparison based upon known physical relationships.

A choice must also be made of what to do with the datum that does not pass a validation procedure. Basically there are two choices. eliminate the questionable data from the file, or flag it for further examination. Automatically discarding data may be a viable, cost-effective option if the screening procedure-is carefully designed and each datum is not of high value. Records must be kept of discarded data so the reason for the fault can be found and corrected. Flagged data are examined and a decision made on their acceptability. If unacceptable, it may be possible to correct them or substitute a more reasonable value (Reynolds, 1979) Corrected or substituted values should be so indicated in the data file, with an explanation of the substitution available to the user. Alternatively, data of questionable value may be kept in the data file under a flagged status, with a notation of why they are questionable. so that the user can make a decision as to their usefulness. This procedure is of questionable value to most users because the collecting agency is frequently in the best position to make a decision on the data.

The ***range test*** is the most common and simplest test. Data are checked to see if they fall within specified limits. The limits are set ahead of time based usually upon historical data or physically impossible values. Some examples of reasonable range tests are rainfall rate greater than 10 in./hour or wind direction not between 1° and 360°. In setting the limits. one must take into consideration whether or not the system will select only outrageous, extreme (i.e., impossible) values usually caused by data handling errors (such as wind speeds greater than 100 m/s or less than zero) or just unusually high (i.e., possible) values, which should be examined further. This may require a further decision on just how extreme a value should be flagged. This decision should be based on the real impact of using extreme values should they be in error. Considerations of the cost of incorrect data, the possibility of correction or substitution, or replacement by obtaining new data should be made. Unfortunately. the decision may also frequently be made on the available resources of those .who examine the flagged data.

Comparison with known statistical distributions may involve comparison of means, standard deviations, means of extremes, or higher order statistics. For example, Lee and Stokes (1978) report that their data base usually had kurtosis of approximately 3 with zero skewness. Any of their instruments. then. that showed a marked departure from these values were considered to be in need of further verification. (Additional research is needed to determine whether these or similar criteria could be used in other areas.)

Lockhart (1979) suggests Compressing data into a densely packed graph where long-term (week. month, or Seasonal) patterns can be easily seen. Major departures from these subjectively seen patterns can be noted and the data checked Although this method of data verification is usually used to check a particular data set against a longer term climatology, it can also be used to check individual values For example, one might compare a temperature reading with the monthly average maximum or minimum plus or minus (respectively) two or three standard deviations This technique obviously depends on a reliable history or representative measurements being available from the Site and is ineffective for noting significant long-term changes in the instrument

Screening data by comparison with fields of similar or related data is commonly done when large amounts of datr are taken and when assumptions of spatial continuity of the meteorological variable are physically reasonable The most easily visualized example of this is a field of atmospheric pressure measurements Any value can be compared with those in a large area around it either visually, or by numerical interpolation Major deviations from the dominant pattern (a low pressure reading in the middle of a high pressure area) are not to be expected Of course. allowance must be made for meso- and micro-scale phenomena such as a shortwave or pressure jump area ahead of a convective storm

Not all meteorological fields can be expected to have the needed conrinuity Rainfall is a notorious example of discontinuity or microscale variations Wind ***speed*** and direction can exhibit continuity on some spatial scales but care must be taken to account for the many effects, such as topography that can confuse the issue (See Section 3)

Interrelated fields can also be used to screen data Rainfall. for example. is unusual without clouds and high humidity while wind direction and speed, especially above the surface layer, are related to pressure gradients

Fields of data in time, ratner than space, are also used to check datum points These checks are usually made on rates of change of the data Checks are made both on rates of change that are too high and not high enough For example atmospheric stability is not expected to change by several classes within an hour A wind direction reading. however that does no; cnange at all for several hours may indicate that

0001463

the vane is stuck (assuming the wind speed is not zero) or that there is some other problem with the system.

Screening checks can also be made to assure that physically improbable situations are not reported in the data. This kind of check is not commonly used because of the wide variety of conditions that can occur in the atmosphere under extreme conditions. These unusual events would frequently be noted first by some of the statistical or range checks noted above.

Some screening points of this type that are used include assuring that the dew point is not greater than the temperature, and that the lapse rate is not greater than the autoconvective lapse rate. Checks on stability class versus time (not allowing "strongly unstable" at night or "stable" during the day) may also be considered in this category.

Table 4.1.1 gives examples of some of the data editing criteria used by three Federal agencies: the National Climatic Center, Klint (1979); the Nuclear Regulatory Commission, Fairobent (1979); and the Tennessee Valley Authority, Reynolds (1978). Examination of the table shows some interesting differences that can be ascribed to the differing missions of the agencies. Because of their global concerns, the NCC must allow a far wider range of limits on fields such as temperature and humidity than does an agency with only local interest, such as TVA. On the other hand, the NCC has the data available to do spatial checks over a wider area than would be possible for many local study situations. Differences can also be noted depending on the type of data collection (spot readings once per hour or three hours versus continuous recordings) and major interests (synoptic weather patterns versus stability). Filippov (1968) gives an exhaustive review of checks used by weather services of many other countries.

4.2 Recommendations

The following is a data validation system recommended for EMSL/RTP to replace the present sytem for screening meteorological data. It could be used to screen data gathered by EMSL, contractors, or state and local agencies. The system takes into account the variable nature of EMSL's field activities It does not depend on, or have the advantages of, long-term multistation network design. nor is it labor intensive The basic goal is that of rapid identification of field problems, with low value assigned to individual data points, thus aliowing the discard of questionable values. Flexibility is available, however, if an individual project's meteorological data are judged to warrant a more criticial approach.

The flow of the system is shown in Figure 4.2.1. All data will go first through a hard copy auditing procedure designed to find data entry and keypunch errors. In the hard copy audit, a percentage of data points will be randomly selected for audit. A second, independent file of these values, as well as the hour just before and after the hour, will be created from the original hard copy. This file will be compared with the master file and discrepancies noted. If there are only a few random discrepancies, these points will be eliminated from the system. If there are several, or there seems to be a systematic pattern of errors, the project office (the office responsible for gathering and reducing the data) will be notified so that they can correct and re-enter the data and correct the data entry system.

The data are next passed through a screening program, which is designed to note and flag questionable values. Flagged data will go to the laboratory meteorological office for review. There they will either be accepted, discarded, or returned to the project officer if there is a large amount of questionable data. That officer may accept, discard, or correct the data. The screening values are given in Table 4.2.1. They offer a combination of range, rate of change, and physical impossibility checks that are chosen to be reasonably restrictive. It is anticipated that some good data will be flagged, but that most data handling and gross instrument failure problems will be caught.

Data that pass the screening program will go through a comparison program. This program will randomly select certain values for manual comparison with information collected by the National Weather Service. In the selection process, one day and one hour will be chosen on which data from all stations in the network will be audited. One day in every 20 will be randomly chosen, and on that day, one hour between 5 and 9 a.m. (EST), will be randomly chosen. Data from that hour and day for all stations will be printed out by the audit program for the manual checks. The program will also make compressed time scale plot (20 days of hourly values on one line) for each parameter for the use of the validators.

The data generated by the audit programs will first be compared with National Weather Service data to see if they fit reasonably well with synoptic conditions prevalent in that area. The meteorologist will choose the stations to be used in the verification. and train the data clerks in the subjective comparison procedure. All questionable data will be given to the meteorologist for review as above. The variables to be checked in this way will include wind speed and direction. temperature, dew point, pressure, and occurrence of precipitation.

Naturally, if the audit checks show a problem with one or more instruments, an attempt will be made to identify the time range of that problem so that all questionable data can be found. Logs of bad data will also be kept and used to identify troublesome instruments and other problems.

This system is suggested principally for EMSL/RTP, but may prove a useful starting place for state and local air pollution agencies wishing to develop a meteorological data validation procedure. The suggested system is very complete and will be evaluated over a period of time. Changes to the system may have to be made, depending upon the needs and resources of the users.

Table 4.1.1. Examples of Data Editing Criteria

Date are edited or challenged for further review in various systems if the editing criteria are met or exceeded.

Wind speed

>25 m/s (NRC)
>50 kts (NCC)
>20 kts and doubles at next 3-hour observation (NCC)
First 5 hourly values within ±0.2 m/hour of next 4 (TVA)

Wind direction

Any recorded with calm wind speed (NCC)
Same sector for more than 18 hours (NRC)
First 5 within ±0.2° of next 4 (TVA)

Temperature

9°F > mean daily maximum for the month (TVA)
9°F < mean daily minimum for the month (TVA)
≥10°F change in 1 hour at a site (TVA)
First 5 hours within ±0.5°F of next 4 (TVA)
>125°F (NCC)
<-60°F (NCC)
≥ 10°F change in 1 hour or 20°F change in 3 hours (NCC)
Same temperature 12 or more hours (NRC)

Dew point

Dew point > temperature (TVA, NRC)
Dew point change > 7°F in 1 hour (TVA)
First 5 hours within ±0.5°F of next 4 (TVA)
>90°F (NCC)
<-60°F (NCC)
Temperature - dew point > 5°F during precipitation (NRC)
Temperature = dew point more then 12 consecutive hours (NRC)

Pressure

>1060 mb /sea level) (NCC)
<940 mb (see level) (NCC)
Station pressure (inches Hg) + elevation (feet) x 10^{-3} <27.75 or >31.3 inches Hg (NCC)
Change of 6 mb or 0.2 inch Hg in 3 hours (NCC)

Vertical temperature gradient and stability

$\Delta T/\Delta z$ > 1°C/100 m between 10 am and 5 pm (TVA)
$\Delta T/\Delta z$ < -1°C/100 m between 6 pm and 5 am (TVA)
$\Delta T/\Delta z$ > 15°C/100 m (TVA)
$\Delta T/\Delta z$ <-3.4°C/100 m (autoconvective lapse rate) (TVA, NRC)
$\Delta T/\Delta z$ changes sign twice in 3 hours (TVA)

A, B, F, or G stability during precipitation (NRC)
F or G stability during the day (NRC)
A, B, or C stability during the night (NRC)
Chenge in stability of more than 3 classes between 2 consecutive hours (NRC)
Same stability for >12 hours (NRC)

NCC = National Climatic Center (Klint, 7979)
NRC = Nuclear Regulatory Commission (Fairobent, 1979)
TVA = Tennessee Valley Authority (Reynolds, 1978)

0001464

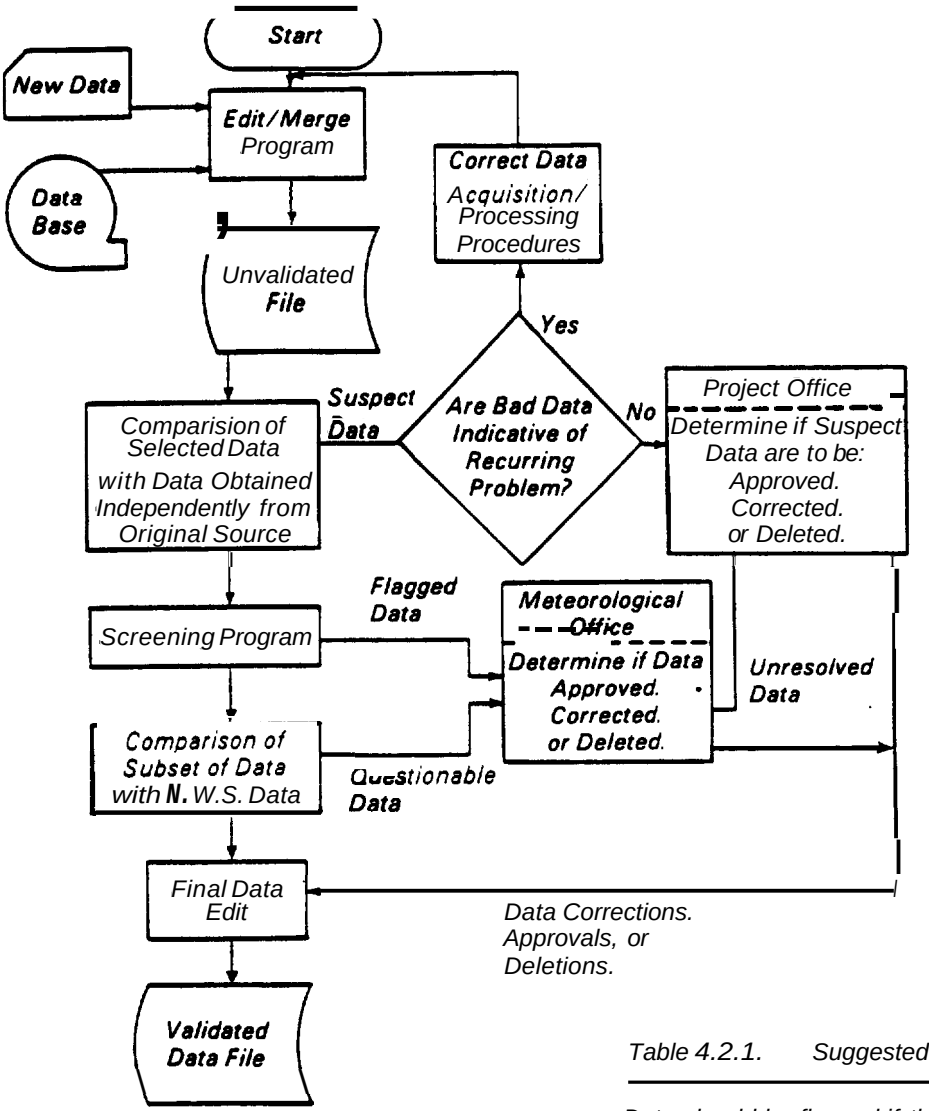

Figure 4.2.1. Schematic flow of decisions in EMSL data validation scheme.

Table 4.2.1. Suggested EMSL Screening Criteria

Data should be flagged if they meet or exceed the following criteria.

Wind speed

>20 m/s (1 hour average)
Unchanged for 12 or more consecutive hours (within ±0 5 m/s)

Wind direction

Any reported with calm or no wind speed
Same 10° sector for 18 or more consecutive hours

Temperature

>45°C
<-35°C
>+5° or <-5° C change/1 hour
Unchanged for 12 or more consecutive hours (within ± 0 5°C)

Dew point

> temperature at that hour (same location)
>+3°C or <-3°C change/1 hour
Unchanged for 12 or more consecutive hours (within 0 5°C)
= temperature for 12 or more consecutive hours (within 0 1°C)

Pressure

>1060 mb (sea level)
<940 mb (sea level)
>+6 or <-6 mb change/3 hours

Rainfall

>15 cm/24 hours
<5 cm/3 months

APPENDIX K

COMPENDIUM METHOD *TO-14*
(SOURCE: EPA HAY 1988)

[Bold items enclosed in brackets denote changes from original text]

COMPENDIUM METHOD TO-14

THE DETERMINATION OF VOLATILE ORGANIC COMPOUNDS (VOCs) IN AMBIENT AIR USING SUMMA® PASSIVATED CANISTER SAMPLING AND GAS CHROMATOGRAPHIC ANALYSIS

QUALITY ASSURANCE DIVISION
ENVIRONMENTAL MONITORING SYSTEMS LABORATORY
U.S. ENVIRONMENTAL PROTECTION AGENCY
RESEARCH TRIANGLE PARK, NORTH CAROLINA 27711

MAY, 1988

METHOD TO14

DETERMINATION OF VOLATILE ORGANIC COMPOUNDS (VOCs) IN AMBIENT AIR USING SUMMA® PASSIVATED CANISTER SAMPLING AND GAS CHROMATOGRAPHIC ANALYSIS

OUTLINE

1. Scope
2. Applicable Documents
3. Summary of Method
4. Significance
5. Definitions
6. Interferences and Limitations
7. Apparatus
   - 7.1 Sample Collection
     - 7.1.1 Subatmospheric Pressure
     - 7.1.2 Pressurized
   - 7.2 Sample Analysis
     - 7.2.1 GC-MS-SCAN Analytical System
     - 7.2.2 GC-MS-SIM Analytical System
     - 7.2.3 GC-Multidetector Analytical System
   - 7.3 Canister Cleaning System
   - 7.4 Calibration System and Manifold
8. Reagents and Materials
9. Sampling System
   - 9.1 System Description
     - 9.1.1 Subatmospheric Pressure Sampling
     - 9.1.2 Pressurized Sampling
     - 9.1.3 All Samplers
   - 9.2 Sampling Procedure
10. Analytical System
   - 10.1 System Description
     - 10.1.1 GC-MS-SCAN System
     - 10.1.2 GC-MS-SIM System
     - 10.1.3 GC-Multidetector (GC-FID-ECD-PID) System
   - 10.2 GC-MS-SCAN-SIM System Performance Criteria
     - 10.2.1 GC-MS System Operation
     - 10.2.2 Daily GC-MS Tuning
     - 10.2.3 GC-MS Calibration
       - 10.2.3.1 Initial Calibration
       - 10.2.3.2 Routine Calibration
   - 10.3 GC-FID-ECD System Performance Criteria (With Optional PID)
     - 10.3.1 Humid Zero Air Certification
     - 10.3.2 GC Retention Time Windows Determination
     - 10.3.3 GC Calibration
       - 10.3.3.1 Initial calibration
       - 10.3.3.2 Routine Calibration
     - 10.3.4 GC-FID-ECD-PID System Performance Criteria
   - 10.4 Analytical Procedures
     - 10.4.1, Canister Receipt
     - 10.4.2 GC-MS-SCAN Analysis (With Optional FID System)
     - 10.4.3 GC-MS-SIM Analysis (With Optional FID System).
     - 10.4.4 GC-ECD Analysis (With Optional PID System)

OUTLINE (Cont.)

11. Cleaning and Certification Program
- 11.1 Canister Cleaning and Certification
- 11.2 Sampling System Cleaning and Certification
  - 11.2.1 Cleaning Sampling System Components
  - 11.2.2 Humid Zero Air Certification
  - 11.2.3 Sampler System Certification With Humid Calibration Gas Standards

12. Performance Criteria and Quality Assurance
- 12.1 Standard Operating Procedures (SOPs)
- 12.2 Method Relative Accuracy and Linearity
- 12.3 Method Modification
  - 12.3.1 Sampling
  - 12.3.2 Analysis
- 12.4 Method Safety
- 12.5 Quality Assurance
  - 12.5.1 Sampling System
  - 12.5.2 GC-MS-SCAN-SIM System Performance Criteria
  - 12.5.3 GC-Multidetector System Performance Criteria

13. Acknowledgements

14. References

APPENDIX A - Availability of Audit Cylinders from U.S. Environmental Protection Agency (USEPA) to USEPA Program/Regional Offices, State/Local Agencies and Their Contractors

APPENDIX B - Operating Procedures for a Portable Gas Chromatograph Equipped With a Photoionization Detector

APPENDIX C - Installation and Operating Procedures for Alternative Air Toxics Samplers

recycled paper

ecology and environment

OUTLINE (Cont.)

11. Cleaning and Certification Program
    11.1 Canister Cleaning and Certification
    112 Sampling System Cleaning and Certification
        1121 Cleaning Sampling System Components
        11.2.2 Humid Zero Air Certification
        11.2.3 Sampler System Certification With Humid Calibration Gas Standards
12. Performance Criteria and Quality Assurance
    12.1 Standard Operating Procedures (SOPs)
    122 Method Relative Accuracy and Linearity
    12.3 Method Modification
        12.3.1 Sampling
        12.3.2 Analysis
    124 Method Safety
    125 Quality Assurance
        12.5.1 Sampling System
        12.5.2 GC-MS-SCAN-SIM System Performance Criteria
        12.5.3 GC-Multidetector System Performance Criteria

13. Acknowledgements

14. References

APPENDIX A - Availability of Audit Cylinders from U.S. Environmental Protection Agency (USEPA) to USEPA Program/Regional Offices, State/Local Agencies and Their Contractors
APPENDIX 8 - Operating Procedures for a Portable Gas Chromatograph Equipped With a Photoionization Detector
APPENDIX C - Installation and Operating Procedures for Alternative Air Toxics Samplers

METHOD TO14

DETERMINATION OF VOLATILE ORGANIC COMPOUNOS (VOCs) IN AMBIENT AIR' USING SUMMA® PASSIVATED CANISTER SAMPLING AND GAS CHROMATOGRAPHIC ANALYSIS

1. Scope

1.1 This document describes a procedure for sampling and analysis of volatile organic canpounds (VOCs) in ambient air. The method is based on collection of whole air samples in SUMMA® passivated stainless steel canisters. The VOCs are subsequently separated by gas chromatography and measured by mats-selective detector or multidetector techniques, This method presents procedures for sampling into canisters to final pressures both above and below atmospheric pressure (respectively referred to as pressurized and subatmospheric pressure sampling),

12 This method is applicable to specific VOCs that have been tested and determined to be stable when stored in pressurized and sub-atmospheric pressure canisten, Numerous compounds, many of which are chlorinated VOCs, have been successfully tested for storage stability in pressurized canisters (1.2). However, minimal documentation is currently available demonstrating stability of VOCs in subatmospheric pressure canisters.

1.3 The organic compounds that have been successfully collected in pressurized canisters by this method are listed in Table 1. These canpounds have been successfully measured at the parts per billion by volume (ppbv) level.

2. Applicable Documents

2.1 ASTM Standards

D1356 - Definition of Terms Related to Atmospheric Sampling and Analysis
E260 - Recommended Practice for General Gas Chromatograony Procedures
E355 - Practice for Gas Chromatography Terms and Relationships

2.2 Other Documents

U.S. Environmental Protection Agency Technical Assistance Document (3)
Laboratory and Ambient Air Studies 4-17)

3. Summary of Method

3.1 Both subatmospheric pressure and pressurized sampling modes use an initially evacuated canister and a pump-ventilated sample line during sample collection. Pressurized sampling requires an additional pump to provide positive pressure to the sample canister, A sample of ambient air is drawn through a sampling train comprised of components that regulate the rate and duration of sampling into a pre-evacuated SUMMA® passivated canister.

3.2 After the air sample is collected, the canister valve is closed, an identification tag is attached to the canister, and the canister is transported to a predetermined laboratory for analysis.

3.3 Upon receipt at the laboratory, the canister tag data is recorded and the canister it attached to the analytical system, During analysis, water vapor is reduced in the gas stream by a Nafion® dryer (if applicable), and the VOCs are then concentrated by collection in a cryogenically-cooled trap. The cryogen is then removed and the temperature of the trap is raised. The VOCs originally collected in the trap a n revolatilized, separated on a GC column, then detected by one or mo— detectors for identification and qwntitation.

3.4 The analytical strategy for Method TO14 involves using a high-resolution gas chromatograph (%) coupled to one or more appropriate GC detectors. Historically, detectors for a GC have been divided into two groups: non-specific detectors and specific detectors. The non-specific detectors include, but are not limited to, the nitrogen-phosphorus detector (NPD), the flame ionization detector (FID), the electron capture detector (ECD) and the photo-ionization detector (PID). The specific detectors include the mass spectrometer (MS) operating in either the selected ion monitoring (SIM) mode or the SCAN mode, or the ion trap detector. The use of these detectors or a combination of these detectors as part of an analytical scheme is determined by the required specificity and sensitivity of the application, While the non-specific detectors are less expensive per analysis and in some cases more sensitive than the specific detector, they vary in specificity and sensitivity for a specific class of compounds. For instance, if multiple halogenated compounds are targeted,

an ECD is usually chosen; if only canpounds containing nitrogen or phosphorus are of interest, a NPD can be used; or, if a variety of hydrocarbon canpounds are sought, the broad response of the FID or PID Is appropriate, In each of these cases, however, the specific identification of the compound within the class is determined only by its retention time, which can be subject to shifts of to interference from other nontargeted canpounds, When misidentification occurs, the error is generally a result of a cluttered chromatogram, making peak assignment difficult. In particular, the more volatile organics (chloroethanes, ethyltoluenes, dichlorobenzenes, and various freons) exhibit less well Qfined chromatographic peaks, leading to misidentification using non-specific detectors. Quantitative comparisons indicate that the FID is more subject to error than the ECD because the ECD is a much more selective detector for a smaller class of compounds which exhibits a stronger response, Identification errors, however, can be reduced by: (a). employing simultaneous detection by different detectors or (b) correlating retention times from different GC columns for confirmation. In either case, interferences on the non-specific detectors can still cause error in identifying a complex sample. The non-specific detector system (GC-NPD-FID-ECD-PID), however, has been used for approximate quanfitation of relatively clean samples. The nonspecific detector system can provide a "snapshot" of the constituents in the sample, allowing determination of:

- Extent of misidentification due to overlapping peaks,
- Position of the VOCs within or not within the concentration range of anticipated further analysis by specific detectors (GC-MS-SCAN-SIM) (if not, the sample is further diluted), and
- Existence of unexpected peaks which need further identification by specific detectors.

On the other hand, the use of specific detectors (MS coupled to a GC) allows positive compound identification, thus lending itself to more specificity than the multidetector GC. Operating in rne SIM mode, the MS can readily approach the same sensitivity as the

multidetector system, but its flexibility is limited. For SIM operation, the MS is programmed to acquire data for a limited number of targeted compounds while disregarding other acquired information. In the SCAN mode, however, the MS becomes a universal detector, often detecting compounds which are not detected by the multidetector approach. The GC-MS-SCAN will provide positive identification, while the GC-MS-SIM procedure provides quantitation of a restricted "target compound" list of VOCs.

The analyst often must decide whether to use specific or non-specific detectors by considering such factors as project objectives, desired detection limits, equipment availability, cost and personnel capability in developing an analytical strategy.

A list of some of the advantages and disadvantages associated with non-specific and specific detectors my assist the analyst in the decision-making process.

Non-Specific Multidetector Analytical System

Advantages	Disadvantages
o Somewhat lower equipment cost than GC-MS	o Multiple detectors to calfbrate
o Less sample volume required for analysis	o Compound identification not positive
o More sensitive - ECD may be 1000 times more sensitive than GC-MS	o Lengthy data interpretation (one hour each for analysis and data reduction)
	o Interference(s) from co-eluting compound(s)
	o Cannot identify unknown compounds - outriae range of calibration - without standards
	o Does not differentiate targetad compounds from interfering compounds

recycled paper

ecology and environment

Specific Detector Analytical System

GC-MS-SIM

Advantages	Disadvantaaes
o positive compound Identification	o can't identify non-specified compounds (ions)
o greater sensitivity than GC-MS-SCAN	o somewhat greater equipment cost than multidetector GC
o less operator interpretation than for multidetector GC	o greater sample volume required than for multidetector GC
o can resolve eo-eluting peak	o universality of detector sacrificed to achieve enhancement in sensitivity
o more specific .than the multidetector GC	

GC-MS-SCAN

o positive compound identification	o lower sensitivity than GC-MS-SIM
o can identify all compounds	o greater sample volume required than for multldetector GC
o less operator interpretation	o somewhat greater equipment cost than multidetector GC
o can resolve co-eluting peaks	

The analytical finish for the measurement chosen by the analyst should provide a definitive identification and a precise quantitation of volatile organics. In a large part, the actual approach to these two objectives is subject to equipment availability. Figure 1 indicates some of the favorite options that are used as on analytical finish. The GC-MS-SCAN option uses a capillary columh GC coupled to a MS operated in a scanning mode and supported by spectral library search routines. This option offers the nearest approximation to unambiguous identification and covers a wide range of comoounds as defined by the completeness of the spectral library. GC-MS-SIM mode is limited to a set of target compounds which are user defined and is more sensitive than GC-MS-SCAN by virtue of the longer dwell times at the restricted number of m/z values; Both these techniques, but especially the GC-MS-SIM option, can use a suoplemental general non-specific detector to verify/identify the presence of VOCs. Finally, the option labelled GC-multidetector system uses a

combination of retention time and multiple general detector verification to identify compounds. However, interference due to nearly identical retention times can affect system quantitation when using this option.

Due to the low concentrations of VOCs encountered in urban air (typically less than 4 ppbv and the majority below 1 ppbv) along with their complicated chromatograms, Method TO-14 strongly recommends the specific detectors (GC-MS-SCAN-SIM) for positive identification and for primary quantitation to ensure that high-quality ambient data is acquired.

For the experienced analyst whose analytical system is limited to the non-specific detectors, Section 10.3 does provide guidelines and example chromatograms showing typical retention times and calibration response factors, and utilizing the non-specific detectors (GC-FID-ECD-PID) analytical system as the primary quantitative technique.

4. Significance

4.1 VOCs enter the atmosphere from a variety of sources, including petroleum refineries, synthetic organic chemical plants, natural gas processing plants, and automobile exhaust. Many of these VOCs are acutely toxic; therefore, their determination in ambient air is necessary to assess human health impacts.

4.2 Conventional methods for VOC determination use solid sorbent samoling techniques. The most widely used solid sorbent is Tenax®. An air sample is drawn through a Tenax®-filled cartridge where certain VOCs are trapped on the polymer. The sample cartridge is transferred to a laboratory and analyzed by GC-MS.

4.3 VOCs can also be successfully collected in stainless steel canisters. Collection of ambient air samples in canisters provides (1) convenient integration of ambient samples over a specific time period, (e.g., 24 hours); (2) remote sampling and central analysis; (3) ease of storing and shipping samples; (4) unattended samole collection; (5) analysis of samples from multiple sites with one analytical system; and (6) collection of sufficient samole volume to allow assessment of measurement precision and/or analysis of

0001472

samples by several analytical systems. However, care must be exercised in selecting, cleaning, and handling sample canisters and sampling apparatus to avoid losses or contamination of the samples. Contamination is a critical issue with canister-based sampling because the canister is the last element in the sampling train.

4.4 Interior surfaces of the canisters are treated by the SUMMA® passivation process, in which a pure chrome-nickel oxide is formed on the surface. This type of vessel has been used in the past for sample collection and has demonstrated sample storage stability of many specific organic compounds.

4.5 This method can be applied to sampling and analysis of not only VOCs, but also some selected semivolatile organic compounds (SVOCs). The term "semivolatile organic compounds" is used to broadly describe organic compounds that are too volatile to be Collected by filtration air sampling but not volatile enough for thermal desorption from solid sorbents. SVOCs can generally be classified as those with saturation vapor pressures at 25°C between 10^{-1} and 10^{-7} mm Hg, VOCs are generally classified as those organics having saturated vapor pressures at 25°C greater than 10^{-1} mm Hg.

5. Definitions

Note: Definitions used in this document and in any user-prepared Standard Operating Procedures (SOPs) should be consistent with ASTM Methods D1356, E260, and E355. All abbreviations and symbols within this method are defined at point of use.

5.1 Absolute canister pressure = Pg+Pa, where Pg = gauge pressure in the canister (kPa, psi) and Pa = barometric pressure (see 5.2).

5.2 Absolute pressure - Pressure measured with reference to absolute zero pressure (as opposed to atmospheric pressure), usually expressed as kPa, mm Hg or psia.

5.3 Cryogen - A refrigerant used to obtain very low temperatures in the cryogenic trap of the analytical system. A typical cryogen is liquid oxygen (bp -183.0°C) or liquid argon (bp -185.7°C).

5.4 Dynamic calibration - Calibration of an analytical system using calibration gas standard concentrations in a form identical or very similar to Me samples to be analyzed and by introducing such standards into the inlet of the sampling or analytical system in a manner very similar to the normal sampling or analytical process.

5.5 Gauge pressure - Pressure measured above ambient atmospheric pressure (as opposed to absolute pressure). Zero gauge pressure. is equal to ambient atmospheric (barometric) pressure.

5.6 MS-SCAN - The GC is coupled to a MS programmed in the SCAN node to scan all ions repeatedly durlng the GC run. As used in the current context, this procedure serves as a qualitative identification and characterization of the sample.

5.7 MS-SIM - The GC is coupled to a MS programmed to acquire data for only specified ions and to disregard all others. This is performed using SIM coupled to retention time discriminators. The GC-SIM analysis provides quantitative results for selected constituents of the sample gas as programmed by the user.

5.8 Megabore® column - Chromatographic column having an internal diameter (I.D.) greater than 0.50 mm. The Megabore® column is a trademark of the J&W Scientific Co. For purposes of this method, Megabore® refers to chromatographic columns with 0.53 mm I.D.

5.9 Pressurized sampling - Collection of an air sample in a canister with a (final) canister pressure above atmospheric pressure, using a sample pump.

5.10 Qualitative accuracy - The ability of an analytical system to correctly identify compounds.

5.11 Quantitative accuracy - The ability of an analytical system to correctly measure the concentration of an identified compound.

5.12 Static calibration - Calibration of an analytical system using standards in a form different than the samples to be analyzed. An example of a static calibration would be injecting a small volume of a high concentration standard directly onto a GC column, bypassing the sample extraction and preconcentration portion of the analytical system.

0001473

5.13 Subatmospheric sampling - Collection of an air sample in an evacuated canister at a (final) canister pressure below atmospheric pressure, without the assistance of a sampling pump. The canister is filled as the internal canister pressure increases to ambient or near ambient pressure. An auxiliary vacuum pump may be used as part of the sampling system to flush the inlet tubing prior to or during sample collection.

6. Interferences and Limitations

6.1 Interferences can occur in sample analysis if moisture accumulates in the dryer (see Section 10.1.1.2). An automated cleanup procedure that periodically heats the dryer to about 100°C while purging with zero air eliminates any moisture buildup. This procedure does not degrade sample integrity.

6.2 Contamination may occur in the sampling system if canisters are not properly cleaned before use. Additionally, all other sampling equipment (e.g., pump and flow controllers) should be thoroughly cleaned to ensure that the filling apparatus will not contaminate samples. Instructions for cleaning the canisters and certifying the field sampling system are described in Sections 12.1 and 12.2, respectively.

6.3 Because the GC-MS analytical system employs a Nafion® permeable membrane dryer to remove water vapor selectively from the sample stream, polar organic canpounds may permeate concurrent with the moisture molecule. Consequently, the analyst should quantitate his or her system with the specific organic constituents under txamination.

7. Apparatus

7.1 Sample Collection

[Note: Subatmospheric pressure and pressurized canister sampling systems are commercially available and have been used as pan of U.S. Environmental Protection Agency's Toxics Air Monitoring. Stations (TAMS), Urban Air Toxic Pollutant Program (UATP), ana the non-methane organic compound (NMOC) samp?ing and analysis program.]

7.1.1 Subatmospheric Pressure (See Figure 2 Without Metal Bello Type Pump)

7.1.1.1 Sampling Inlet line - stainless steel tubing to connect the sampler to the sample Inlet.

7.1.1.2 Sample canister - leak-free stainless steel pressure vessels of desired volume (e.g., 6 L), with valve and SUMMA® passivated interior surfaces (Scientific Instrumentation Specialists, Inc., P.O. Box 8941, Moscow, ID 83843, or Anderson Samplers, Inc., 4215-C Wendell Dr., Atlanta, GA, 30336, or equivalent).

7.1.1.3 Stainless steel vacuum/pressure gauge - capable of measuring vacuum (-100 to 0 kPa or 0 to 30 in Hg) and pressure (0-206 kPa or 0-30 psig) in the sampling system (Matheson, P.O. Box 136, Morrow, GA 30200, Model 63-3704, or equivalent). Gauges should be tested clean a d leak tight.

7.1.1.4 Electronic mass flaw controller - capable of maintaining a constant flow rate (± 10%) over a sampling period of up to 24 hours and under conditions of changing temperature (20-40°C) and humidity (Tylan Corp., 19220 S. Normandie Ava., Torrance, CA 90502, Model FC-260, or equivalent).

7.1.1.5 Particulate matter filter - 2-um sintered stainless steel in-line filter (Nupro Co., 4800 E 345th St., Willoughby, OH 44094, Model SS-2F-K4-2, or equivalent).

7.1.1.6 Electronic timer - for unattended sample collection (Paragon Elect. Co., 606 Parkway Blvd., P.O. Box 28, Twin Rivers, WI 54291, Model 700840, or equivalent).

7.1.1.7 Solenoid valve - electrically-operated, bi-stable solenoid valve (Skinner Magnelatch Valve, New Britain, CT, Model V5RAM49710, or equivalent) with Viton® seat and o-rings.

7.1.1.8 Chromatographic grade stainless steel tubing and fittings - for interconnections (Alltech Associates, 2051 Waukegan Rd., Deerfield, IL 60015, Cat. #5123.

recycled paper

or equivalent). All such materials in contact with sample, analyte, and support gases prior to analysis should be chromatographic grade stainless steel.

7.1.1.9 Thermostatically controlled heater - to maintain temperature inside insulated sampler enclosure above ambient temperature (Watlow Co., Pfafftown, NC, Part 04010080, or equivalent).

7.1.1.10 Heater thermostat - automatically regulates heater temperature (Elmwood Sensors, Inc., 500 Narragansett Park Dr., Pawtucket RI 02861, Model 3455-RC-0100-0222, or equivalent).

7.1.1.11 Fan - for cooling sampling system (EG&G Rotron, Woodstock, NY, Model SUZAI, or equivalent).

7.1.1.12 Fan thermostat - automatically regulates fan operation (Elmwood Sensors, Inc., Pawtucket, RI, Model 3455-RC4100-0244, or equivalent).

7.1.1.13 Maximum-minimum thermometer - records highest and lowest temperatures during sampling period (Thomas Scientific, Brooklyn Thermometer Co., Inc., P/N 9327H30, or equivalent).

7.1.1.14 Nupro stainless steel shut-off valve - leak free, for vacuum/pressure gauge,

7.1.1.15 Auxiliary vacuum pump - continuously draws ambient air to be sampled through the inlet manifold at 10 L/min. or higner flow rate, Sample is extracted from the manifold at a lower rate, and excess air is exhausted. [Note: The use of higher inlet flow rates dilutes any contamination present in the inlet and reduces the possibility of sample contamination as a result of contact with active adsorption sites on inlet walls.]

7.1.1.16 Elapsed time meter - measures duration of sampling (Conrac, Cramer Div., Old Saybrook, CT, Type 6364, P/N 10082, or equivalent).

7.1.1.17 Optional fixed orifice, capillary, or adjustable micrometering valve - may be used in lieu of the electronic flow controller for grab samples or long duration time-integrated samples. Usually appropriate only in situations where screening samples are

7.1.2 Pressurized (Figure 2 Yith Metal Bellows Type Pump and Figure

7.1.2.1 Sample pump - stainless steel, metal bellows type (Metal Bellows Corp., 1075 Providence Highway, Sham, MA 02067, Model MB-151, or equivalent), capable of 2 atmospheres output pressure, Pump must be free of leaks, clean, and uncontaminated by oil or organic compounds. [Note: An alternative sampling system has been developed by Dr. R. Rasmussen, The Oregon Graduate Center (18,19) and is illustrated In Figure 3. This flow system uses, in order, a pump, a mechanical flow regulator, and a mechanical compensating flow restrictive device. In this configuration the pump Is purged with a large sample flow, thereby eliminating the need for an auxiliary vacuum pump to flush the sample Inlet. Interferences using this configuration have been minimal.]

7.1.2.2 Other supporting materials - all other components of the pressurized sampling system (Figure 2 with metal bellows type pump and Figure 3) are similar to components discussed in Sections 7.1.1.1 through 7.1.1.16.

7.2 Sample Analysis

7.2.1 GC-MS-SCAN Analytical System (See Figure 4)

7.2.1.1 The GC-MS-SCAN analytical system must be capable of acquiring and processing data in the MS-SCAN mode,

7.2.1.2 Gas chromatograph - capable of sub-adient temperature programming for the oven, with other generally standard features such as gas flow regulators, automatic control of valves and integrator, etc. Flame ionization detector optional. (Hewlett Packard, Rt. 41, Avondale, PA 19311, Model 5880A, with oven temperature control and Level 4 BASIC programming, or equivalent.)

7.2.1.3 Chromatographic detector - mass-selective detector (Hewlett Packard, 3000-T Hanover St., 98, Palo Alto, CA 94304, Model HP-5970 MS, or equivalent., equipped with computer and appropriate software (Hewlett Packard, 3000-T Hanover St., 98, Palo Alto, CA 94304,

0001475

recycled paper

HP-216 Computer, Quicksilver K software, Pascal 3.0, mass storage 9133 HP. Winchester with 3.5 inch floppy disk, or equivalent). The GC-MS is set in the SCAN mode, where the MS screens the sample for Identification and qwntitatlon of VOC species.

7.2.1.4 Cryogenic trap with temperature control assembly - refer to Section 10.1.1.3 for complete description of trap and temperature control assembly (Nutech Corporation, 2142 Geer St., Durham, NC, 27704, Model 320-01, or equivalent).

7.2.1.5 Electronic mass flow controllers (3) - maintain constant flow (for carrier gas and sample gas) and to provide analog output to monitor flow anomalies (Tylan Model 260, 0-100 cm^3/min, or equivalent).

7.2.1.6 Vacuum pump - general purpose laboratory pump, capable of drawing the desired sample volume through the cryogenic trap (Thomas Industries, Inc, , Sheboygan WI, Model 107BA20, or equivalent).

7.2.1.7 Chromatographic grade stainless steel tubing and stainless steal plumbing fittings - refer to Section 7.1.1.8 for description.

7.2.1.8 Chromatographic column - to provide compound separation such as shown in Table 5 (Hewlett Packard, Rt. 41, Avondale, PA 19311, OV-1 capillary column, 0.32 mm x 50 m with 0.88 um crosslinked methyl silicone coating, or equivalent).

7.2.1.9 Stainless steel vacuum/pressure gauge (optional) - capable of measuring vacuum (-101.3 to 0 kPa) and pressure (0-206 kPa) in the sampling system (Matheson, P.O. Box 136, Morrow, GA 30200, Model 63-3704, or equivalent). Gauges should be tested clean and leak tight.

7.2.1.10 Stainless steel cylinder pressure regulators - standard two-stage cylinder regulators with pressure gauges for helium, zero air and hydrogen gas cylinders.

7.2.1.11 Gas purifiers (3) - used to remove organic impurities and moisture [illegible] gas streams (Hewlett Packard, [illegible] Avondale, PA, [illegible] P/N 19362 - 60500, or equivalent).

7.2.1.12 Low dead-volume tee (optional) - used to split the exit flow from the GC column (Alltech Associates, 2051 Waukegan Rd., Deerfield, IL 60015, Cat. #5839, or equivalent).

7.2.1.13 Nafion® dryer - consisting of Nafion tubing co-axially mounted within larger tubing (Perma Pure Products, 8 Executive Drive, Toms River, NJ, 08753, Model MD-125-48, or equivalent). Refer to Section 10.1.1.2 for description.

7.2.1.14 Six-port gas chromatographic valve - (Seismograph Service Corp, Tulsa, OK, Seiscor Model VIII, or equivalent).

7.2.1.15 Chart recorder (optional) - compatible with the detector output signals to record optional FIO detector response to the sample.

7.2.1.16 Electronic integrator (optional) - compatible with the detector output signal of the FIO and capable of integrating the area of one or more response peaks and calculating peak areas corrected for baseline drift,

7.2.2 GC-MS-SIM Analytical System (See Figure 4)

7.2.2.1 The GC-MS-SIM analytical system must be capable of acquiring and processing data in the MS-SIM mode.

7.2.2.2 All components of the GC-MS-SIM system are identical to Sections 7.2.1.2 through 7.2.1.16.

7.2.3 GC-Multidetector Analytical System (See Figure 5 and Figure 6)

7.2.3.1 Gas chromatograph with flame ionization and electron capture detectors (photoionization detector optional) - capable of sub-ambient temperature programming for the oven and simultaneous operation of all detectors, and with other generally standard features such as gas flow regulators, automatic control of valves and integrator, etc (Hewlett Packard, Rt. 41, Avondale, PA 19311, Model 5880A, with oven temperature control and Level 4 BASIC programming, or equivalent).

recycled paper

7.2.3.2 Chart recorders - compatible with the detector output signals to record detector response to the sample.

7233 Electronic integrator - caapatible with the detector output signals and capable of integrating the area of one or more response peaks and calculating peak areas corrected for baseline drift.

7.2.3 .4 Six-port gas chromatographic valve - (Seismograph Service Corp, Tulsa, OK, Seiscor Model VIII, or equivalent).

7.2.3.5 Cryogenic trap with temperature control assembly - refer to Section 10.1.1.3 for complete description of trap and temperature control assembly (Nutech Corporation, 2142 Geer St., Durham, NC 27704, Model 32061, or equivalent).

7.2.3.6 Electronic mass flow controllers (3) - maintain constant flow (for carrier gas, nitrogen make-up gas and sample gas) and to provide analog output to monitor flow anomalies (Tylan Model 260, 0-100 cm^3/min, or quivalent).

7.2.3.7 Vacuum pump - general purpose laboratory pump, capable of drawing the desired sample volume through the cryogenic trap (see 7.2.1.6 for source and description).

7.2.3.8 Chromatographic grade stainless steel tubing and statnless steel pluming fittings - refer to Section 7.1.1.8 for description.

7.2.3.9 Chromatographic column - to provide comoound separation such as shown in Table 7, (Hewlett Packard, Rt. 41, Avondale, PA 19311, OV-1 capillary column, 0.32 mm x 50 m with 0.88 um crosslinked methyl silicone coating, or equivalent). [Note: Other columns (e.g., DB-624) can be used as long as the system meets user needs. The wide? Megabore® column (i.e., 0.53 mm I.D.) is less susceptible to plugging as a result of trapped water, thus eliminating the need for a Nafion® dryer in the analytical system. ?he Megabore® column has sample capacity approacning that of 3 packed column, while retaining much of the peak resolution traits of narrower columns (i.e., 5.32 mm I.D.).

7.2.3.10 Vacuum/pressure gauges (3) - refer to Section 7.2.1.9 for description.

7.2.3.11 Cylinder pressure stainless steel regulators - standard, two-stage cylinder regulators with pressure gauges for helium, rem air, nitrogen, and hydrogen gar cylinders.

7.2.3.12 Gas purifiers (4) - used to remove organic impurities and moisture from gas streams (Hewlett-Packard, Rt, 41, Avondale, PA, 19311, P/N 19362 - 60500, or equivalent).

7.2.3.13 Low dead-volume tee - used to split (50/50) the exit flow from the GC column (Alltech Associates, 2051 Waukegan Rd., Deerfield, IL 60015, Cat, #5839, or equivalent).

7.3 Canister Cleaning System (See Figure 7)

7.3.1 Vacuum pump - capable of evacuating sample canister(s) to an absolute pressure of <0.05 mm Hg.

7.3.2 Manifold - stainless steel manifold with connections for simultaneously cleaning several canisters.

7.3.3 Shut-off valve(s) - seven (7) on-off toggle valves,

7.3.4 Stainless steel vacuum gauge - capable of measuring vacuum in the manifold to an absolute pressure of 0.05 mm Hg or less.

7.3.5 Cryogenic trap (2 required) - stainless steel U-shaped open tubular trap cooled with liquid oxygen or argon to prevent contamination from back diffusion of oil from vacuum pump and to provide clean, zero air to sample canister(s).

7.3.6 Stainless steel pressure gauges (2) - 0-345 kPa (0-50 psig) to monitor zero air pressure.

7.3.7 Stainless steel flow control valve - to regulate flow of zero air into canister(s).

7.3.8 Humidifier - pressurizable wafer bubbler containing high performance liquid chromatography (HPCC) grade deionized water or other system caoaale of providing moisture to the zero air supply.

7.3.9 Isothermal oven (optional) for heating canisters (Fisher Scientific, Pittsburgh, PA, Model 349, or equivalent).

0001477

recycled paper

7.4 Calibration System and Manifold (See Figure 8)

7.4.1 Calibration manifold - glass manifold, (1.25 cm I.D. x 66 cm) with sampling ports and internal baffles for flow disturbance to ensure proper mixing.

7.4.2 Humidifier - 500-mL impinger flask containing HPLC grade deionized water.

7.4.3 Electronic mass flow controllers - one 0 to 5 L/min and one 0 to 50 cm^3/min (Tylan Corporation, 23301-TS Wilmington Ave., Carson, CA, 90745, Model 2160, or equivalent).

7.4.4 Teflon® filter(s) - 47-mm Teflon. filter for particulate control, best source.

8. Reagents and Materials

8.1 Gas cylinders of helium, hydrogen, nitrogen, and zero air - ultrahigh purity grade, best source.

8.2 Gas calibration standards - cylinder(s) containing approximately 10 ppmv of each of the following compounds of interest:

vinyl chloride
vinylidene chloride
1,1,2-trichloro-1,2,2-trifluoroethane
chloroform
1,2-dichlororthane
benzene
toluene
Freon 12
methyl chloride
1,2-dichloro-1,1,2,2-tetrafluoroethane
methyl bromide
ethyl chloride
Freon 11
dichloromethane
1,1-dichloroethane
cis-1,2-dichloroethylene
1,2-dichloropropane
1,1,2-trichloroethane
1,2-dibromoethane
tetrachloroethylene
chlorobenzene
benzyl chloride
hexachloro-1,3-butadiene
methyl chloroform
carbon tetrachloride
trichloroethylene
cis-1,3-dichloropropene
trans-1,3-dichloropropene
ethyl benzene
o-xylene
m-xylene
p-xylene
Styfene
1,1,2,2-tetrachloroethane
1,3,5-trimethyl benzene
1,2,4-trimethyl benzene
m-dichlorobenzene
o-dichlorobenzene
p-dichlorobenzene
1,2,4-trichlorobenzene

The cylinder(s) should be traceable to a National Bureau of Standards (NBS) Standard Reference Material (SRM) or to a NBS/EPA approved Certified Reference Material (CRM). The components may be purchased in one cylinder or may be separated into different cylinders. Refer to manufacturer's specification for guidance on purchasing and mixing VOCs in gas cylinders. Those compounds purchased should match one's own *target* list.

8.3 Cryogen - liquid oxygen (bp -183.0°C), or liquid argon (bp -185.7°C), best source.

8.4 Gas purifiers - connected in-line between hydrogen, nitrogen, and zero air gas cylinders and system inlet line, to remove moisture and oqanic impurities from gas streams (Alltech Associates, 2051 Waukegan Road, Deerfield, IL, 60015, or equivalent).

8.5 Deionized water - high performance liquid chromatography (HPLC) grade, ultrahigh purity (for humidifier), best source.

8.6 4-bromofluorobenzene - used for tuning GC-MS, best source.

8.7 Hexane - *for* cleaning sampling system components, reagent grade, best source.

8.8 Methanol - for cleaning sampling system components, reagent grade, *best* source,

9, Sampling System

9.1 System Description

9,101 Subatmospheric Pressure Sampling [See Figure 2 (Without Metal Bellows Type Pump)]

9.1.1.1 In preparation for subatmospheric sample collection in a canister, the canister *is* evacuated to 0.05 mm Hg. When opened to the atmosphere containing the VOCs to be sampled, the differential pressure causes the sample to flow into the canister. This technique may be used to collect grab samples (duration of 10 to 30 seconds) or time-integrated samples (duration of 12 to 24 hours) taken through a flow-restrictive inlet (e.g., mass flow controller, critical orifice).

recycled paper

ecology and environment

9.1.1.2 With a critical orifice flow restrictor, there will be a decrease in the flow rate as the pressure approaches atmospheric. However, with a mass flow controller, the subatmospheric sampling system can maintain a constant flow rate from futl vacuum to within about 7 kPa (1.0 psi) or less below ambient pressure.

9.1.2 Pressurized Sampling (See Figure 2 (With Metal Bellows Type Pump).

9.1.2.1 Pressurized sampling is used when longer-tern integrated samples or higher volume samples are required, The sample is collected in a canister using a pump and flow control arrangement to achieve a typical 103-206 kPa (15-30 psig) final canister pressure. For example, a 6-liter evacuated canister can be filled at 10 cm^3/min for 24 hours to achieve a final pressure of about 144 kPa (21 psig).

9.1.2.2 In pressurized canister sampling, a metal bellows type pump dram in ambient air from the sampling manifold to fill and pressurize the sample canister.

913 All Samplers

9.1.3.1 A flow control device is chosen to maintain a constant flow into the canister over the desired sample period. This flow rate is determined so the canister is filled (to about 88.1 kPa for subatmospheric pressure sampling or to about one atmosphere above ambient pressure for pressurized sampling) over the desired sample period. The flow rate can be calculated by

$$F = \frac{P \times V}{T \times 60}$$

where:

F = flow rate (cm^3/min).

P = final canister pressure, atmospheres absolute. P is approximately equal to

$$\frac{\text{kPa gauge}}{101.3} + 1$$

V = volume of the canister (cm^3).

T = sample period (hours).

For example, if a 6-L canister is to be filled to 202 kPa (2 atmospheres) absolute pressure in 24 hours, the flow rate can be calculated by

$$F = \frac{2 \times 6000}{24 \times 60} = 8.3\ cm^3/min$$

9.1.3.2 For automatic operation, the timer is wired to start and stop the pup at appropriate times for the desired sample period. The timer must also control the solenoid valve, to open the valve when starting the pump and close the vrlve when stopping the pump.

9.1.3.3 The use of the Skinner Magnelatch valve avoids any substantial temperature rise that would occur with a conventional, normally closed solenoid valve that would have to be energized during the entire sample period, The temperature rise in the valve could causa outgassing of organic compounds from the Viton valve seat material. The Skinner Magnelatch valve requires only a brief electrical pulse to open or close at the appropriate start and stop times and therefore experiences no temperature increase, The pulses may be obtained either with an electronic timer that can be programmed for short (5 to 60 seconds) ON periods, or with a conventional mechanical timer and a special pulse circuit. A simple electrical pulse circuit for operating the Skinner Magnelatch solenoid valve with a conventional mechanical timer is illustrated in Figure 9(a). However, with this simple circuit. the valve may operate unreliably during brief power interruptions or if the timer is manually switched on and off too fast, A better circuit incorporating a time-delay relay to provide more reliable valve operation is shown in Figure 9(b).

0001479

9.1.3.4 The connecting lines between the sample inlet and the canister should be as short as possible to minimize their volume. The flow rate into the canister should remain relatively constant over the entire sampling period. If a critical orifice is used, some drop in the flow rate may occur near the end of the sample period as the canister pressure approaches the final calculated pressure.

9.1.3.5 As an option, a second electronic timer (see Section 7.1.1.6) may be used to start the auxiliary pump several hours prior to the sampling period to flush and condition the inlet line.

9.1.3.6 Prior to field use, each sampling system must pass a humid zero air certification (see Section 12.2.2). All plumbing should be checked carefully for leaks. The canisters must also pass a humid zero air certification before use (see Section 12.1).

9.2 Sampling Procedure

9.2.1 The sample canister should be cleaned and tested according to the procedure in Section 12.1.

9.2.2 A sample collection system is assembled as shown in Figure 2 (and Figure 3) and must meet certification requirements as outlined in Section 12.2.3. [Note: The sampling system should be contained in an appropriate enclosure.]

9.2.3 Prior to locating the sampling system, the user may want to perform "screening analyses" using a portable GC system, as outlined in Appendix B, to determine potential volatile organics present and potential "hot spots." The information gathered from the portable GC screening analysis would be used in developing a monitoring protocol, which includes the sampling system location, based upon the "screening analysis" results.

9.2.4 After "screening analysis," the sampling system is located. Temperatures of ambient air and sampler box interior are recorded on canister sampling field data sheet (Figure [illegible]). [Note: The following discussion is related to a "cur[illegible]

9.2.5 To verify correct sample flow, a "practice" (evacuated) canister is used in the sampling system. [Note: For a subatmospheric sampler, the flow meter and practice canister are needed, For the pump-driven s—, the practice canister is not needed, as the flow can be measured at the outlet of the system.] A certified mass flow meter is attached *to* the inlet line of the manifold, just in front of the filter. The canister is opened. The sampler is turned on and the reading of the certified mass flow meter is compared to the sampler mass flow controller. The values should agree within ±10%. If nut, the sampler mass flow meter needs to be recalibrated or there is a leak in the system. This should be investigated and corrected. [Note: Mass flow meter readings may drift. Check the zero reading carefully and add or subtract the zero reading when reading or adjusting the sampler flow rate, *to* compensate for *any* zero drift.] After two minutes the desired canister flow rate is adjusted to the proper value (as indicated by the certified mass flow meter) by the sampler flow control unit controller (e.g., 3.5 cm^3/min for 24 hr, 7.0 cm^3/min for 12 hr). Record final *flow* under "CANISTER ROW RATE,' Figure 10.

9.2.6 The sampler is turned off and tho elapsed time meter is reset *to* 000.0. Note: *Any* time *the* sampler is turned off, wait at least 30 seconds *to* turn the sampler back on.

9.2.7 The 'practice' canister and certified mass flow meter are disconnected and a clean certified (see Section 12.1) canister is attached to the system.

9.2.8 The canister valve *and* vacuum/pressure gauge valve are opened.

9.2.9 Pressure/vacuum in the canister is recorded on the canister sampling field data sheet (Figure 10) as indicated by the sampler vacuum/pressure gauge.

9.2.10 The vacuum/pressure gauge valve is closed and the maximum-minimum thermometer is reset to current temperature. of day and elapsed time meter readings are recorded on the canister sampling field data sheet.

9.2.11 The electronic timer is set to begin and stop the sampling period at the appropriate times. Sampling commences and stops by the programmed electronic timer.

0001480

recycled paper

ecology and environment

9.2.12 After the desired sampling period, the maximum, minimum, current interior temperature and current ambient temperature are recorded on the sampling field data sheet, The current reading from the flow controller is recorded.

9.2.13 At the end of the sampling period, the vacuum/pressure gauge valva on the sampler is briefly opened and closed and the pressure/vacuum is recorded on the sampling field data sheet. Pressure should be close to desired pressure. [Note: For a subatmospheric sampling system, if the canister is at atmospheric pressure when the field final pressure check is performed, the sampling period may be suspect. This information should be noted on the sampling field data sheet.] Time of day and elapsed time meter readings are also recorded.

9.2.14 The canister valve is closed. The sampling line is disconnected from the canister and the canister is removed from the system. For a subatmospheric system, a certified mass flow meter is once again connected to the inlet manifold in front of the in-line filter and a "practice" canister is attached to the Magnelatch valve of the sampling system. The final flow rate is recorded on the canister sampling field data sheet (sea Figure 10). [Note: .Fur a pressurized system, the final flow may be measured directly.] The sampler is turned off.

9.2.15 An identification tag is attached to the canister. Canister serial number, sample number, location, 'and date are recorded on the tag.

10. Analytical System (See Figures 4, 5 and 6)

10.1 System Description

10.1.1 GC-MS-SCAN System

10.1.1.1 The analytical system is comprised of a GC equipped with a mass-selective detector set in the SCAN mode (see Figure 4). All ions, are scanned by the MS repeatedly during the

GC run. The system includes a computer and appropriate software for data acquisition, data reduction, and data reporting, A 400 cm^3 air sample is collected from the canister into the analytical system. The sample air is first passed through a Nafion® dryer, through the 6-port chromatographic valve, then routed into a cryogenic trap. [Nata: White the GC-multidetector analytical system does not employ a Nafion® dryer for drying the sample gas stream, it is used here because the GC-MS system utilizes a larger sample volume and is far more sensitive to excessive moisture than the GC-multidetector analytical system. Moisture can adversely affect detector precision. The Nafion® dryer also prevents freezing of moisture on the 0.32 mm I.D. column, which may cause column blockage and possible breakage.] The trap is heated (-160°C to 120°C in 60 sec) and the analyte is injected onto the OV-1 capillary column (0.32 mm x SO m). [Note: Rapid heating of the trap provides efficient transfer of the sample components onto the gas chromatographic column.] Upon sample injection onto the column, the MS computer is signaled by the GC computer to begin detection of compounds which elute from the column. The gas stream from the GC is scanned within a preselected range of atomic mass units (amu). For detection of canpounds in Table 1, the range snoulc at 18 to 250 am, resulting in a 1.5 Hz repetition rate, Six (6) scans per eluting chromatographic peak are provided at this rate. The 10–15 largest peaks are chosen by an automated data reduction program, the three scans nearest peak apex are averaged, and a background subtraction is performed. A library search is then performed and the top ten compound matches for each peak are listed. A qualitative characterization

0001481

recycled paper

of the sample is provided by this procedure, A typical chromatogram of VOCs detemined by GC-MS-SCAN is illustrated in Figure 11(a).

10.1.1.2 A Nafion® permeable membrane dryer is used to remove water vapor selectively from the sample stream. The permeable membrane consists of Nafion® tubing (a copolymer of tetrafluoroethylene and fluorosulfonyl monomer) that is coaxially mounted within larger tubing. The sample stream is passed through the interior of the Nafion® tubing, allowing water (and other light, polar compounds) to permeate through the walls into a dry air purge stream flowing through the annular space between the Nafion® and outer tubing, [Note: To prevent excessive moisture build-up and any memory effects in the dryer, a clean-up procedure involving periodic heating of the dryer (100°C for 20 minutes) while purging with dry zero air (500 cm^3/min) should be implemented as part of the user's SOP manual. The clean-up procedure is repeated during each analysis (see Section 14, reference 7). Recent studies have indicated no substantial loss of targeted VOCs utilizing the above clean-up procedure (7). This cleanup procedure is particularly useful when employing cryogenic preconcentration of VOCs with subsequent GC analysis using a 0.32 mm I.D. column because excess accumulated Hater can cause trap and column blockage ana also adversely affect detector precision. In addition, the improvement in water removal from the sampling stream will allow analyses of much larger volumes of sample air in the event that greater system sensitivity is required for targeted compounds.]

10.1.1.3 The packed metal tubing used for reduced temperature trapping of VOCs is shown in Figure 12. The cooling unit is comprised of a 0.32 cm outside diameter (O.D.) nickel tubing loop packed with 60-80 mesh Pyrex® beads (Nutech Model 320-01, or equivalent). The nickel tubing loop is wound onto a cylindrically formed tube heater (250 watt). A cartridge heater (25 watt) is sandwiched between pieces of aluminum plate at the trap inlet and outlet to provide additional heat to eliminate cold spots in the transfer tubing. During operation, the trap is inside a two-section stainless steel shell which it well insulated. Rapid heating (-150 to +100°C in 55 s) is accomplished by direct thermal contact between the heater and the trap tubing. Cooling is achieved by vaporization of the cryogen. In the shell, efficient cooling (+120 to -150°C in 225 s) is facilitated by confining the vaporized cryogen to the small open volume surrounding the trap assembly. The trap assembly and chromatographic valve are mounted on a baseplate fitted info the injection and auxiliary tones of the GC on an insulated pad directly above the column oven when used with the Hewlett-Packard 5880 GC. [Note: Alternative trap assembly and connection to the GC may be used depending upon user's requirements.] The carrier gas line is connected to the injection end of the analytical column with a zero-dead-volume fitting that is usually held in the heated zone above the GC oven. A 15 cm x 15 cm x 24 cm aluminum box is fitted over the sample handling elements to complete the package. Vaporized cryogen is vented through the top of the box.

0001482

10.1.1.4 As an option, the analyst may wish to split the gas stream exiting the column with a low dead-volume tee, passing one-third of the sample gas (1.0 mL/min) to the mass-selective detector and the remaining two-thirds (2.0 mL/min) through a flame ionization detector, as illustrated as an option in Figure 4. The use of the specific detector (MS-SCAN) coupled with the non-specific detector (FID) enabler enhancement of data acquired from a single analysis, In particular, the FID provides the user:

- o Sed-real time picture of the progress of the analytical scheme;
- o Confirmation by the concurrent MS analysis of other labs that can prwide only FID results; and
- o Ability to compare GC-FID with other analytical laboratories with only GC-FID capability,

10.1.2 GC-MS-SIM System

10.1.2.1 The analytical system is canprised of a GC equipped with an OV-1 capillary column (0.32 mm x 50 m) and a mass-selective detector set in the SIM mode (set figure 4). The GC-MS is set up for automatic, repetitive analysis. The system is programed to acquire data for only the target compounds and to disregard all others. The sensitivity is 0.1 ppbv for a 250 cm^3 air sample wit3 analytical precision of about 5% relative standard deviation. Concentration of compounds based upon a previously installed calibration table is reported by an automated data reduction program. A Nafion® dryer is also employed by this analytical system prior to cryogenic preconcentration: therefore, many polar compounds are not identified by this procedure.

10.1.2.2 SIM analysis is based on a combination of retention times and relative abundances of selected ions (see Table 2). These qualifiers are stored on the hard disk of the GC-MS computer and are applied for identification of each chromatographic peak, The retention time qualifier is determined to be ± 0.10 minute of the library retention time of the canpound. The acteptance level for relative abundance is detennined to be ± 15% of the expected abundance, except for vinyl chloride and methylene chloride, which is detennined to be ∓ 25%. Three ions are measured for most of the forty compounds. Wmn compound identification is made by the computer, any peak that fails any of the qualifying tests is flagged (e.g., with an *). All the data should be manually examined by the analyst to detennine the reason. for the flag and whether the compound should be reported as found. While this adds some subjective judgment to the analysis, computer-generated identification problems can be clarified by an experienced operator. Manual insoection of the quantitative results snould also be performed to verify concentrations outside the expected range. A typical chromatogram of VOCs determined by GC-MS-SIM mode is illustrated in Figure 11(b).

10.1.3 GC-Multidetector (GC-FID-ECD) System with Optional PID

10.1.3.1 The analytical system (see Figure 5) is comprised of a gas chromatograoh equipped with a capillary column ana electron capture and flame ionization detectors (see Figure 5). In typical operation, samole air from pressurized canisters is vented past the inlet to the analytical system from the canister at a flow rate of 75 cm^3/min. For analysis, only 35 cm^3/min of samole gas is used, wnile excess

0001483

recycled paper

ecology and environment

is vented to the atmosphere. Sub-ambient pressure canisters are connected directly to the inlet. The sample gas stream is routed through a six port chromatographic valve and into the cryogenic trap for a total sample volume of 490 cm^3. [Note: This represents a 14 minute sampling period at a rate of 35 cm^3/min.] The trap (set Section 10.1.1.3) is cooled to -150°C by controlled release of a cryogen. VOCs and SVOCs are condensed on the trap surface while N_2, O_2, and other sample components are passed to the pump. After the Organic compounds are concentrated, the valve is switched and the trap is heated. The revolatilized compounds are transported by helium carrier gas at a rate of 4 cm^3/min to the head of the Megabore® OV-f capillary column (0.53 mm x 30 m). Since the column initial temperature is at -50°C, the VOCs and SVOCs are cryofocussed on the head of the column. Then, the oven temperature is programmed to increase and the VOCs/SVOCs in the carrier gar are chromatographically separated. The carrier gas containing the separated VOCs/SVOCs is then directed to two parallel detectors at a flow rate of 2 cm^3/min each. The detectors sense the presence of the speciated VOCs/SVOCs, and the response is recorded by either a strip chart recorder or a data processing unit.

10.1.3.2 Typical chromatograms of VOCs determined by the GC-FID-ECD analytical system are illustrated In Figures 11(c) and 11(d), respectively.

10.1.3.3 Helium is used as the carrier gas (4 cm^3/min) to purge residual air from the trap at the end of the sampling phase and to carry the revolatilized VOCs through the Megabore® GC column. Moisture and organic impurities are removed from the helium gas stream by a cnemical purifier installed in the GC (see

Section 7.2.1.11). After exiting the OV-1 Megabore® column, the carrier gas stream is split to the two detectors at rates of 2 cm^3/min each.

10.1.3.4 Gas scrubbers containing Drierite® or silica gel and SA molecular sieve are used to remove moisture and organic impurities from the zero air, hydrogen, and nitrogen gas streams. [Note: Purity of gas purifiers is checked prior to use by passing humid zero-air through the gas purifier and analyzing according to Section 12.2.2.]

10.1.3.5 All lines should be kept as short as practical. All tubing used for the system should be chromatographic grade stainless steel connected with stainless steel fittings. After assembly, the system should be checked for leaks according to manufacturer's specifications.

10.1.3.6 The FID burner air, hydrogen, nitrogen (make-up), and helium (carrier) flow rates should be set according to the manufacturer's instructions to obtain an optimal FID response while maintaining a stable flame throughout the analysis- Typical flow rates are: burner air, 450 cm^3/min; hydrogen, 30 cm^3/min; nitrogen, 30 cm^3/min; helium, 2 cm^3/min.

10.1.3.7 The ECD nitrogen make-up gas and helfum carrier flow rates should be set according to manufacturer's instructions to obtain an optimal ECD response, Typical flow rates are: nitrogen, 76 cm^3/min am helium, 2 cm^3/min.

10.1.3.8 The GC-FID-ECD could be modifiea to incluce a PID (see Figure 6) for increased sensitivity (20). In the photoionization process, a molecule is ionized by ultraviolet light as follows: R + hv --> R + e-, where R+ is the ionized specie and a photon is represented by hv, with energy less than or equal to the ionization potential of

0001484

the molecule, Generally all species with an ionization potential less than the ionization energy of the lamp are detected. Because the ionization potential of all major components of air (02, N_2, CO, CO_2, and H_2O) is greater than the ionization energy of lamps in general use, they are not detected. The sensor is comprised of an argon-filled, ultraviolet (UV) light source where a portion of the organic vapors are ionized in the gas stream. A pair of electrodes are contained in a chamber adjacent to the sensor. When a positive potential Is applied to the electrodes, any ions formed by the absorption of W light are driven by the created electronic field to the cathode, and the current (proportional to the organic vapor concentration) is measured. The PID is generally used for canpounds having ionization potentials less than the ratings of the ultraviolet lamps, This detector is used for determination of most chlorinated and oxygenated hydrocarbons, aromatic compounds, and high molecular weight aliphatic canpounds, Because the PID is insensitive to methane, ethane, carbon monoxide, carbon dioxide, and water vapor, it is an excellent detector. The electron volt rating is applied specifically to the wavelength of the most intense mission line of the lamo's outout spectrum. Some comoounds with ionization potentiais above the lamo rating can still be detected due to the presence of small quantities of more inttnse lignt. A typical system configuration associated with the GC-FID-ECD-PID is illustrated in Figure 6. The system is currently being used in EPA's TO-88 Urban Air Toxics Monitoring Program.

10.2 GC-MS-SCAN-SIM System Performance Criteria

10.2.1 GC-MS System Operation

10.2.1.1 Prior to analysis, the GC-MS system is assembled and checked according to manufacturer's instructions.

10.2.1.2 Table 3.0 outlines general operating conditions for the GC-MS-SCAN-SIM system with optional FID.

10.2.1.3 The GC-MS system is first challenged with humid zero air (see Section 11.2.2).

10.2.1.4 The GC-MS and optional FID system is acceptable if it contains less than 0.2 ppbv of targeted VOCs.

10.2.2 Daily GC-MS Tuning (See Figure 13)

10.2.2.1 At the beginning of each day or prior to a calibration, the GC-MS system must be tuned to verify that acceptable performance criteria are achieved,

10.2.2.2 For tuning the GC-MS, a cylinder containing 4-bromofluorobenzene is introduced via a sample loop valve injection system. [Note: Some systems allow auto-tuning to facilitate this process.] The key ions and ion abundance criteria that must be met art illustrated in Table 4. Analysis should nut begin until all those criteria are met.

10.2.2.3 The GC-MS tuning standard could alsa be used to assess GC column performance (chromatographic check) and as an internal standard. Obtain a background correction mass spectra of 4-bromofluorobenzene and check that all key ions criteria are met. If the criteria are not achieved, the analyst must retune the mass spectrometer ana repeat the test until all criteria are achieved.

10.2.2.4 The performance criteria must be achieved before any samples, blanks or standards are analyzed. If

recycled paper

ecology and environment

any key ion abundance observed for the daily 4-bromofluorobenrene mass tuning check differs by more than 10% absolute abundance from that observed during the previous daily tuning, the instrument must be retuned or the sample and/or calibration 'gases reanalyzed until the above condition is met.

10.2.3 GC-MS Calibration (Set Figure 13)

[Note: Initial and routine calibration procedures are illustrated in Figure 13.]

10.2.3.1 Initial Calibration - Initially, a multipoint dynamic calibration (three levels plus humid zero air) is performed on the GC-MS system, before sample analysis, with the assistance of a calibration system (see Figure 8). The calibration system uses NBS traceable standards or NBS/EPA CRMs in pressurized cylinders (containing a mixture of the targeted VOCs at naninal concentrations of 10 ppmv in nitrogen (Section 8.2)] as working standards to be diluted with humid zero air. The contents of the working standard cylinder(s) are metered (2 cm^3/min) into the heated mixing chamber where they are mixed with a 2-L/min humidified zero air gas stream to achieve a nominal 10 ppbv per compound calibration mixture (see Figure 3). this naninal 10 ppbv standard mixture is allowed to flow and equilibrate for a minimum of 30 minutes. After the equilibration period, the gas standard mixture is samoled and analyzed by the real-time GC-MS system [see Figure 3(a) and Section 7.2.1]. The results of the analyses are averaged, flow audits are performed on the mass flow meters and the calculated concentration compared to generated values. After the GC-MS is calibrated at three concentration levels, a second humid zero air samole is passed through the system and analyzed. The second humid zero air test is used to verify that the GC-MS system is certified clean (less than 0.2 ppbv of target compounds),

10.2.3.2 As an alternative, a multipoint humid static calibration (three levels plus zero humid air) can be performed on the GC-MS system. During the humid static calibration analyses, three (3) SUMMA® passivated canisters are filled each at a different concentration between 1-20 ppbv from the calibration manifold using a pump and mass flow control arrangement [see Figure 8(c)]. The canisters are then delivered to the GC-MS to serve as calibration standards. The canisters are analyzed by the MS in the SIM mode, each analyzed twice. The expected retention time and ion abundance (see Tabic 2 and Table 5) are used to verify proper operation of the GC-MS system. A calibration response factor is determined for tach analyte, as illustrated in Table 5, and the computer calibration table is updated with this information, as illustrated in Table 6.

10.2.3.3 Routine Calibration - The GC-MS system is calibrated drily (ad before sample analysis) with a one-point calibration. The GC-MS system is Calibrated either with the dynamic calibration procedure [see Figure 8(a)] or with a 6-L SUMMA® passivated canister fillea with numia calibration standards from the callbration manifold (see Section 10.2.3.2). After the single point calibration, the GC-MS analytical system is challenged with a humidified zero gas stream to insure the analytical system returns to specification (less than 0.2 ppbv of selective organics).

10.3 GC-FID-ECD System Performance Criteria (With Optional 2D System) (See Figure 14)

10.3.1 Humid Zero Air Certification

10.3.1.1 Before system calibration and sample analysis, the GC-FID-ECD analytical system is assemb ed and checked according to manufacturer's instructions.

recycled paper

10.3.1.2 The GC-FID-ECD system is first challenged with humid zero air (see Section 12.2.2) and monitored.

10.3.1.3 Analytical systems contaminated with less than 0.2 ppbv of targeted VOCs are acceptable.

10.3.2 GC Retention Time Windows Determination (See Table 7)

10.3.2.1 Before analysis can be performed, the retention time windows must be established for each analyte.

10.3.2.2 Make sure the GC system is within optimum operating conditions.

10.3.2.3 Make three injections of the standard containing all compounds for retention time window determination. [Note: The retention time window must be established for each analyte every 72 hours during continuous operation.]

10.3.2.4 Calculate the standard deviation of the three absolute retention times for each single component standard. The retention window is defined as the mean plus or minus three times the standard deviation of the individual retention times for each standard. In those cases where the standard deviation for a particular standard is zero, the laboratory must substitute the standard deviation of a closely-eluting, similar compound to develop a valid retention time window.

10.3.2.5 The laboratory must calculate retention time windows for each standard (see Table 7) on each GC column, whenever a new GC column is installed or when major components of the GC are changed. The data must be noted and retained in a notebook by the laboratory as part of the user SOP and as a quality assurance check of the analytical system.

10.3.3 GC Calibration

[Note: Initial and routine calibration procedures are illustrated in Figure 14.]

10.3.3.1 Initial Calibration - Initially, a multipoint dynamic calibration (three levels plus humid zero air) is performed on the GC-FID-ECD system, before sample analysis, with the assistance of a calibration system (see Figure 8). The calibration system uses NBS traceable standards or NBS/EPA CRMs in pressurized cylinders [containing a mixture of the targeted VOCs at nominal concentrations of 10 ppmv in nitrogen (Section 8.2)] as working standards to be diluted with humid zero air. The contents of the working standard cylinders are metered (2 cm^3/min) into the heated mixing chamber where they are mixed with a 2-L/min humidified zero air stream to achieve a nominal 10 ppbv per compound calibration mixture (see Figure 8). This nominal 10 ppbv standard mixture is allowed to flow and equilibrate for an appropriate amount of time. After the equilibration period, the gas standard mixture is sampled and analyzed by the GC-MS system [see Figure 8(a)]. The results of the analyses are averaged, flow audits are performed on the mass flow controllers used to generate the standards and the appropriate response factors (concentration/area counts) are calculated for each compound, as illustrated in Table 5. [Note: GC-FIDs are linear in the 1-20 ppbv range and may not require repeated multipoint calibrations; whereas, the GC-ECD will require frequent linearity evaluation.] Table 5 outlines typical calibration response factors

0001487

and retention times for 40 VOCs. After the GC-FID-ECD is calibrated at the three concentration levels, a second humid zero air sample is passed through the system and analyzed. The second humid zero air test is used to verify that the GC-FID-ECD system is certified clean (less than 0.2 ppbv of target compounds).

10.3.3.2 Routine Calibration - A one point calibration is performed daily on the analytical system to verify the initial multipoint calfbration (see Section 10.3.3.1). The analyzers (GC-FID-ECD) are calibrated (before sample analysis) using the static calibration procedures (see Section 10.2.3.2) involving pressurized gas cylinders containing low concentrations of the targeted VOCs (10 ppbv) in nitrogen. After calibration, humid zero air is once again passed through the analytical system to verify residual VOCs are not present.

10.3.4 GC-FID-ECD-PID System Performance Criteria

10.3.4.1 As an option, the user may wish to include a photoionization detector (PID) to assist in peak identification and increase sensitivity.

10.3.4.2 This analytical system is presently being used in U.S. Environmental Protection Agency's Urban Air Toxic Pollutant Program (UATP).

10.3.4.3 Preparation of the GC-FID-ECD-PID analytical system is identical to the GC-FID-ECD system (sea Section 10.3).

10.3.4.4 Table 8 outlines typical retention times (minutes for selected organics using the GC-FID-ECD-PID analytical system.

10.4 Analytical Procedures

10.4.1 Canister Receipt

10.4.1.1 The overall condition of each sample canister is observed. Each canister should be received with an attached sample identification tag.

10.4.1.2 Each canister is recorded in the dedicated laboratory logbook, Alto noted on the identification tag are date received and initials of recipient.

10.4.1.3 The pressure of the canister is checked by attaching a pressure gauge to the canister inlet. The canister valve is opened briefly and the pressure (kPa, psig) is recorded. [Note: If pressure is <83 kPa (<12 psig), the user may wish to pressurize the canisters, as an option, with zero grade nitrogen up to 137 kPa (20 psig) to ensure that enough sample is available for analysis, However, pressurizing the canister can introduce additional error, increase the minimum detection limit (MDL), and is tiw consuming, The user should weigh these limitations as part of his program objectives before pressurizing.] Final cylinder pressure is recorded on canister sampling field data sheet (see Figure 10).

10.4.1.4 If the canister pressure is increased, a dilution factor (DF) is calculated and recorded on the sampling data sheet.

$$DF = \frac{Y_a}{X_a}$$

where:

X_a = canister pressure (kPa, psia) absolute before dilution.

Y_a = canister pressure (kPa, psia) absolute after dilution.

After sample analysis, detected VOC concentrations are multiplied by the dilution factor to determine concentration in the sampled air.

0001488

10.4.2 GC-MS-SCAN Analysis (With Optional FID System)

10.4.2.1 The analytical system should be properly assembled, humid zero air certified (see Section 12.3), operated (see Table 3), and calibrated for accurate VOC determination.

10.4.2.2 The mass flow controllers are checked and adjusted to provide correct flow rates for the system,

10.4.2.3 The sample canister is connected to the inlet of the GC-MS-SCAN (with optional FID) analytical system, For pressurized samples, a mass flow controller is placed on the canister and the canister valve is opened and the canister flow is vented past a tee inlet to the analytical System at a flow of 75 cm^3/min so that 40 cm^3/min is pulled through the Nafion® dryer to the six-port chromatographic valve, [Note: flow rate is not as important as acquiring sufficient sample volume.] Sub-ambient pressure samples are connected directly to the Inlet,

10.4.2.4 The GC Oven and cryogenic trap (inject position) are cooled to their set points of -60°C and -160°C, respectively.

10.4.2.5 As soon as the cryogenic trap reaches its lower Set point of -160°C, the six-port chromatographic valve is turned to its fill position to initiate sample collection.

10.4.2.6 A ten minute collection period of canister samole is utilized. [Note: 40 cm^3/min x 10 min = 400 cm^3 sampled canister contents.j

10.4.2.7 After the samole is preconcentrated in the cryogenic trap, the GC sampling valve is cycled to the inject position and the cryogenic trap is heated. The trapped analytes are thermally desorbed onto the head of the OV-1 capillary column (0.31 mm I.D. x 50 m length). The GC oven is programmed to start at -60°C and after 2 min to heat to 150°C at a rate of 3°C per minute.

10.4.2.8 Upon sample injection onto the column, the MS is signaled by the computer to scan the eluting carrier gas fra 18 to 250 amu, resulting in a 1.5 Hz repetition rate. This corresponds to about 6 scans per eluting chromatographic peak.

10.4.2.9 Primary identification is based upon retention time and relative abundance of eluting ions as compared to *the* spectral library stared on the hard disk of the GC-MS data computer.

10.4.2.10 The concentration (ppbv) is calculated using the prwiourly established response factors (see Section 10.2.3.2), as illustrated in Table 5, [Note: If the canister is diluted before analysis, an appropriate multiplier is applied to correct for the volume dilution of the canister (Section 10.4.1.4).]

10.4.2.11 The optional FID trace allows the analyst to record the progress of the analysis,

10.4.3 GC-MS-SIM Analysis (With Optional FID System)

10.4.3.1 When the MS is placed in the SIM mode *of* operation, the MS monitors only preselected ions, rather than scanning all masses continuously between two mass iimits.

10.4.3.2 As a result, increased sensitivity and improved quantitative analysis can be achieved.

10.4.3.3 Similar to the GC-MS-SCAN configuration, the GC-MS-SIM analysis is based on a combination *of* retention times and relative abundances of selected ions (see Table 2 and Tabie 5). These qualifiers are stored on the hard disk of the GC-MS computer and are applied for identification of each chromatographic peak. Once the GC-MS-SIM has identified the peak, a calibration response factor is used to determine the analyte s concentration.

0001489

10.4.3.4 The individual analyses are handled in three phases: data acquisition, data reduction, and data reporting. The data acquisition software is set in the SIM mode, where specific compound fragments are monitored by the MS at specific times in the analytical run. Data reduction is coordinated by the postprocessing macro program that is automatically accessed after data acquisition is completed at the end of the GC run. Resulting ion profiles are extracted, peaks are Identified and integrated, and an internal integration report is generated by the program. A reconstructed ion chromatogram for hardcopy reference is prepared by the program and various parameters of interest such as time, date, and integration constants are printed. At the completion of the macro program, the data reporting software is accessed. The appropriate calibration table (see Table 9) is retrieved by the data reporting program from the computer's hard disk storage and the prooer retention time and response factor parameters are aoplied to the macro program's integration file. With reference to certain pre-set acceptance criteria, peaks are automatically identified and quantified and a final summary report is prepared, as illustrated in Table 10.

10.4.4 GC-FID-ECD Analysis (With Optional PID System)

10.4.4.1 The analytical system should be properly assembled, humid zero air certified (see Section 12.2) and calibrated through a dynamic standard calibration procedure (see Section 10.3.2). The FID detector is lit and allowed to stabilize.

10.4.4.2 Sixty-four minutes are required for each sample analysis - 15 min for system initialization, 14 min for sample collection, 30 min for analysis, and 5 min for post-time, during which a report is printed. [Note: This may vary depending

10.4 ,403 The helium and sample mass flow controllers are checked and adjusted to provide correct flow rates tor the system. Helium is used to purge residual air from the trap at the end of the sampling phase and to carry the revolatilized VOCs from the trap onto the GC column and into the FID-ECD. The hydrogen, burner air, and nitrogen flow rates should also be checked, The cryogenic *trap* is connected and verified to be operating properly while flowing cryogen through the system.

10.4.4.4 The sample canister is connected to the inlet of the GC-FID-ECD analytical system. The canister valve is opened and the canister flow is vented past a tee inlet to the analytical system at 75 cm^3/min using a 0-500 cm^3/min Tylan mass flow controller. During analysis, 40 cm^3/min of sample gas is pulled through *the* six-port chromatography valve and routed through the trap at the appropriate time while the extra sample is vented. The VOCs are condensed in the trap while the excess flow is *exhausted* through an exhaust vent, which assures that the sample air flowing through the trap is at atmospheric pressure.

10.4.4.5 The six-port valve is snitched to the inject position and the canister valve is closed.

10.4.4.6 The electronic integrator is started.

10.4.4.7 After the sample is preconcentrated on the trap, the *trap* is heated and the VOCs are thermally desorbed onto the head of the capillary column. Since the column is at -50°C, the VOCs are cryofocussed on the column. Then, the oven temperature (programmed) increases and the VOCs elute from the column to the parallel FID-ECD assem

10.4.4.8 The peaks eluting from the detectors are identified by retention time (see Table [illegible] and Table 3), while peak areas are recorded in area

recycled paper

counts. Figures 15 and 16 illustrate typical response of the FID and ECD, respectively, for the forty (40) targeted VOCs. [Note: Refer to Table 7 for peak number and identification.]

10.4.4.9 The response factors (see Section 10.3.3.1) are multiplied by the area counts for each peak to calculate ppbv estimates for the unknown sample. If the canister is diluted before analysis, an appropriate dilution multiplier (DF) is applied to correct for the volume dilution of the canister (see Section 10.4.1.4).

10.4.4.10 Depending on the number of canisters to be analyzed, each canister is analyzed twice and the final concentrations for each analyte are the averages of the two analyses.

10.4.4.11 However, if the GC-FID-ECD analytical system discovers unexpected peaks which need further identification and attention or overlapping peaks are discovered, eliminating possible quantitation, the sample should then be subjected to a GC-MS-SCAN for positive identification and quantitation.

11. Cleaning and Certification Program

11.1. Canister Cleaning and Certification

11.1.1 All canisters must be clean and free of any contaminants before sample collection.

11.1.2 All canisters are leak tested by pressurizing them to approximately 206 kPa (30 psig) with zero air. [Note: The canister cleaning system in Figure 7 can be used for this task.] The initial pressure is measured, the canister valve is closed, and the final pressure is checked after 24 hours. If leak tight, the pressure should not vary more than ± 13.8 kPa (± 2 psig) over the 24 hour period.

11.1.3 A canister cleaning system may be assembled as illustrated in Figure 7. Cryogen is added to both the vacuum pump and zero air supply traps. The canister's

are connected to the manifold, The vent shut-off valve and the canister valve(s) are opened to release any remaining pressure in the canister(s). The vacuum pump is started and the vent shut-off valve is then closed and the vacuum shut-off valve is opened. The canister(s) are evacuated to < 0.05 mm Hg (for at least one hour). [Note: On a dally basis or more often if necessary, the cryogenic traps should be purged with zero air to remove any trapped water from previous canister cleaning cycles.]

111.4 The vacuum and vacuum/pressure gauge shut-off valves are closed and the zero air shut-off valve is opened to pressurize the canister(s) with humid zero air to approximately 206 kPa (30 psig). If a zero gas generator system is used, the flow rate may need to be limited to maintain the zero air quality.

11.1.5 The zero shut-off valve is closed and the canister(s) is allowed to vent down to atmospheric pressure through the vent shut-off valve, The vent shut-off valve is closed, Steps 1113 through 11.1.5 are repeated two additional times for a total of three (3) evacuation/pressurization cycles for each set of canisters.

11.1.6 At the end of the evacuation/pressurization cycle, the canister is pressurized to 206 kPa (30 psig) with humid zero air. The canister is then analyzed by a GC-MS or GC-FID-ECD analytical system. Any canister that has not tested clean (compared to direct analysis of humidified zero air of less than 0.2 ppbv of targeted VOCs) should n a be used. As a "blank" check of the canister(s) and cleanup procedure, the final humid zero air fill of 100% of the canisters is analyzed until the cleanuo system and canisters are proven reliable (less than 0.2 poov of targets VOCs). The check can then be reduced to a lower percentage of canisters.

11.1.7 The canister is reattacned to the cleaning manifold and is then reevacuated to <0.05 mm Hg and remains in this condition until used. The canister valve is closed. The canister is removed from the cleaning system and the canister connection is capped with a stainless steel fitting.

recycled paper

The canister is now ready for collection of an air sample. An Identification tag Is attached to the neck of each canister for field notes and chain-of-custody purposes.

11.1.8 As an option to the humid zero air cleaning procedures, the canisters could be heated in an isothermal oven to 100°C during Section 11.1.3 to ensure that lower molecular weight compounds (C_2-C_8) are not retained on the walls of the canister. [Note: For sampling heavier, more complex VOC mixtures, the canisters should be heated to 250°C during Section 11.1.3.7.] Once heated, the canisters are evacuated to 0.05 mm Hg. At the end of the heated/evacuated cycle, the canisters are pressurized with humid zero air and analyzed by the GC-FID-ECD system. Any canister that has not tested clean (less than 0.2 ppbv of targeted compounds) should not be used, Once tested clean, the canisters are reevacuated to 0.05 mm Hg and remain in the evacuated state until used.

11.2 Sampling System Cleaning and Certification

11.2.1 Cleaning Sampling System Components

11.2.1.1 Sample components are disassembled and cleaned before the sampler is assembled. Nonmetallic parts are rinsed with HPLC grade deionized water and dried in a vacuum oven at 50°C. Typically, stainless steel parts and fittings are cleaned by placing them in a beaker of methanol in an ultrasonic bath for 15 minutes. This procedure is repeated with hexane as the solvent.

11.2.1.2 The parts are then rinsed with HPLC grade deionized water and dried in a vacuum oven at 100°C for 12 to 24 hours.

11.2.1.3 Once the samoler is assembled, the entire system is purged with humid zero air for 24 Sours.

11.2.2 Humid Zero Air Certification

[Note: In the following sections, "certification" is defined as evaluating the samoling system with humid

zero air and humid calibration gases that pass through all active components of the sampling system. The system is "certified" if no significant additions or deletions (less than 0.2 ppbv of targeted compounds) have occurred when challenged with the tart gas stream.]

11.2.2.1 The cleanliness of the sampling system is determined by testing the sampler with humid zero air without an evacuated gas cylinder, as follows.

11.2.2.2 The calibration system and manifold are assembled, as illustrated in Figure 8, The sampler (without an evacuated gas cylinder) is connected to the manifold and the zero air cylinder activated to generate a humid gas stream (2 L/min) to the calibration manifold [see Figure 8(b)].

11.2.2.3 The humid zero gas stream passes through the calibration manifold, through the sampling system (without an evacuated canister) to a GC-FID-ECD analytical system at 75 cm^3/min so that 40 cm^3/min is pulled through the six-port valve and routed through the cryogenic trap (see Section 10.2.2.1) at the appropriate time while the extra sample is vented. [Note: The exit of the sampling system (without the canister) replaces the canister in Figure 4.] After the sample (400 mL) is preconcentrated on the trap, the trap is heated and the VOCs are thermally desorbed onto the head of the capillary column. Since the column is at -50°C, the VOCs are cryofocussed on the column. Then, the oven temperature (programmed) increases and the VOCs begin to elute and are detected by a GC-MS (see Section 10.2) or the GC-FID-ECD (see Section 10.3). The analytical system should not detect greater than 0.2 ppbv of targeted VOCs in order for the sampling system to pass the humid zero air certification

recycled paper

test. Chrunatograms of a certified sampler and contaminated sampler are illustrated in Figures 17(a) and (b), respectively. If the sampler passes the humid zero air test, it is then tested with humid calibration gas standards containf ng selected VOCs at concentration levels expected in field sampling (e.g., 0.5 to 2 ppbv) as outlined in Section 11.2.3.

11.2.3 Sampler System Certification with Humid Calibration Gas Standards

11.2.3.1 Assemble the dynamic calibration system and manifold as illustrated in Figure 8;

11.2.3.2 Verify that the calibration system is clean (less than 0.2 ppbv of targeted canpounds) by sampli ng a humidified gas stream, <u>without</u> gas calibration standards, with a previously certified clean canister (see Section 12.1).

11.2.3.3 The assembled dynamic calibration system is certified clean if less than 0.2 ppbv of targeted canpounds are found.

11.2.3.4 For generating the humidified calibration standards, the calibration gas cylinder(s) (see Section 8.2) containing nominal concentrations of 10 ppmv in nitrogen of selected VOCs, are attached to the calibration system, as outlined in Section 10.2.3.1. The gas cylinders are opened and the gas mixtures are passed through 0 to 10 cm^3/min certified mass flow controllers to generate ppo levels of calibration standards.

11.2.3.5 After the aoorooriate equilibrium period, attach the sampling system (containing a certified evacuated canister) to the manifold, as illustrated in Figure 8(a).

11.2.3.6 Sample the dynamic calibration gas stream with the sampling system according to Section 9.2.1. [Note: To conserve generated calibration gas, bypass the canister sampling system manifold and attach the sampling system to the calibration gas stream at the inlet of the in-line filter of the sampling system so the flow will be less than 500 cm^3/min.]

11.2.3.7 Concurrent with the sampling system operation, realtime monitoring of the calibration gas stream is accomplished by the on-line GC-MS or GC-multidetector analytical system [Figure 8(b)] to provide reference concentrations of generated VOCs.

11.2.3.8 At the end of the sampling period (normally same time period used for anticipated sampling), the sampling system canister is analyzed and compared to the reference GC-MS or GC-multidetector analytical system to determine if the concentration of the targeted VOCs was increased or decreased by the sampling system.

1102.3.9 A recovery of between 90% and 110% is expected for all targeted VOCs.

12, Performance Criteria and Quality Assurance

12.1 Standard. Operating Procedures (SOPs)

12.1.1 SOPs should be generated in each laboratory describing and documenting the following activities: (1) assemoly, calibration, leak check, and operation of specific sampling systems and equipment used; (2) preparation, storage, shipment, and handling of samples; (3) assemly, leak-check, calibration, and operation of the analytical system, addressing the specific equipmnt used; (4) canister storage and cleaning; and (5) all aspects of data recording and processing, including lists of computer hardware and software used.

recycled paper

12.1.2 Specific stepwise Instructions should be provided in the SOPs and should be readily available to and understood by the laboratory personnel conducting the work.

12.2 Method Relative Accuracy and Linearity

12.2.1 Accuracy can be determined by injecting VOC standards (set Section 8.2) from an audit cylinder into a sampler. The contents are then analyzed for the components contained in the audit canister. Percent relative accuracy is calculated:

$$\% \text{ Relative Accuracy} = \frac{X - Y}{X} \times 100$$

Where: Y = Concentration of the targeted canpound recovered fran sampler.

X = Concentratton of VOC targeted canpound in the NBS-SRM or EPA-CRM audit cylinders. .

12.2.2 If the relative accuracy does not fall between 90 and and 110 percent, the field sampler should be removed from use, cleaned, and recertified according to initial certification procedures outlined in Section 11.2.2 and Section 11.2.3. Historically, concentrations of carbon tetrachloride, tetrachloroethylene, and hexachlorobutadiene have sometimes been detected at lower concentrations wnen using parallel ECD and FID detectors. Uhen these three canpounds are present at concentrations close to calibration levels, both detectors usually agree on the reported concentrations. At concentrations below 4 ppbv, there is a problem with nonlinearity of the ECD. Plots of concentration versus peak area for calibration compounds detected by the E33 have shown that the curves are nonlfnear for carbon tetrachloride, tetrachloroethylene, and hexachlorobutadfene, as illustrated in Figures 18(a) through 18(c). Other targeted ECD and FID compounds scaled linearly for the range 0 to 8 ppbv, as shown for chloroform in Figure 18(d). For compounds that are not linear over the calibration

range, area counts generally roll off between 3 and 4 ppbv, To correct for the nonlinearity of these compounds, an additional calibration step is performed. An evacuated stainless steel canister is pressurized with calfbration gas at a nominal concentration of 8 ppbv. The sample is then diluted to approximately 3.5 ppbv with zero air and analyzed. The instrument response factor (ppbv/area) of the ECD for each of the three compounds is calculated for the 3.5 ppbv sample. Then, both the 3.5 ppbv and the 8 ppbv response factors are entered into the ECD calibration table, The software for the Hewlett-Packard 5880 level 4 GC is designed to act-date multilevel calibration entries, so the correct response factors are automatically calculated for concentrations in this range.

12.3 Method Modification

12.3.1 Sampling

12.3.1.1 The sampling system for pressurized canister sampling could be modified to use a lighter, more compact pump. The pump currently being used weighs about 16 kilograms (35 lbs). Commercially available pumps that could be used as alternatives to the prescribed sampler pump are described below. <u>Metal Bellows MB-41 pump:</u> These pumps are cleaned at the factory; however, some precaution should be taken with the circular (4.8 cm diameter) Teflon® and stainless steel part directly under the flange. It is often dirty when received and should be cleaned before use. This part is cleaned by removing it from the pump, manually cleaning with deionized water, and placing in a vacuum oven at 100°C for at least 12 hours. Exposed parts of the pump head are also cleaned with swabs and allowed to air dry. These pumps have

0001494

proven to be very reliable; however, they are only useful up to an outlet pressure of about 137 kPa (20 psig). Neuberger Pump: Viton gaskets or seals must be specified with this pump. The 'factory direct' pump is received contaminated and leaky. The pump is cleaned by disassembling the pump head (which consists of three stainless steel parts and two gaskets), cleaning the gaskets with deionized water and drying in a vacuum oven, and remachining (or manually lapping) the sealing surfaces of the stainless steel parts. The stainless steel parts arc then cleaned with methanol, hexane, deionized water and heated in a vacuum oven. The cause for most of the problems with this pump has betn scratches on the metal parts of the pump head, Once this rework procedure is performed, the pump is considered clean and can be used up to about 240 kPa (35 psig) output pressure. This pump is utilized in the sampling system Illustrated in Figure 3.

12.3.1.2 Urban Air Toxics Sampler

The sampling system described in this method can be modified like the sampler in EPA's FY-88 Urban Air Toxics Pollutant Program. This particular sampler is described in Appendix C (see Figure 19).

12.32 Analysis

12.3.2.1 Inlet tubing from the calibration manifold could be heated to 50°C (same temperature as the calibration manifold) to prevent condensation on the internal walls of the system.

12.3.2.2 The analytical strategy for Method TO-14 involves positive identification and quantitation by GC-MS-SCAN-SIM mode of operation with optional FID. This is a highly specific and sensitive detection technique. Because a specific detector system (GC-MS-SCAN-SIM) is more complicated and expensive than the use of non-specific detectors

(GC-FID-ECD-PID), the analyst may want to perform a screening analysis and preliminary qwntitation of VOC species in the sample, including any polar compounds, by utilizing the GC-multidetector (GC-FID-ECD-PID) analytical system prior to GC-MS analysis, This system *can* be used for approximate quantitation. The GC-FID-ECD-PID provides a "snapshot" of the constituents in the sample, allowing the analyst to determine:

- Extent of misidentification due to overlapping peaks,
- Whether the constituents are within the calibration range of the anticipated GC-MS-SCAN-SIM analysis or does the sample require further dilution, and
- *Are* there unexpected peaks which need further Identification through GC-MS-SCAN or are there peaks of interest needing attention?

If unusual peaks are observed from the GC-FID-ECD-PID system, the analyst then performs a GC-MS-SCAN analysis. The GC-MS-SCAN will provide positive identification of suspect peaks from the GC-FID-ECD-PID system. If no unusual peaks are identified and only a select number of VOCs are of concern, the analyst can then proceed to GC-MS-SIM. The GC-MS-SIM is used for final qwntitation of selected VOCs. Polar compounds, however, cannot be identified by the GC-MS-SIM due to the use of a Nafion® dryer to remove water from the samole prior to analysis, The dryer removes polar compounds along with the water. The analyst often has to make this decision incorporating project objectives, detection limits, equipment availability, cost and personnel capability in developing an analytical strategy. Figure 20 outlines the use of the GC-FID-ECD-PID as a 'screening' approach, with the GC-MS-SCAN-SIM for final identification and quantitation.

0001495

recycled paper

12.4 Method Safety

This procedure may involve hazardous materials, operations, and equipment. This method does not purport to address all of the safety problems associated with Its use. It is the user's responsibility to establish appropriate safety and health practices and determine the applicability of regulatory limitations prior to the implementation of this procedure. This should be part of the user's SOP manual.

12.5 Quality Assurance (See Figure 21)

12.5.1 Sampling System

12.5.1.1 Section 9.2 suggests that a portable GC system be used as a 'screening analysis' prior to locating fixed-site samplers (pressurized or subatmospheric).

12.5.1.2 Section 9.2 requires pre and post-sampling measurements with a certified mass flow controller for flow verification of sampling system.

12.5.1.3 Section 11.1 requires all canisters to be pressure tested to 207 kPa ± 14 kPa (30 psig ± 2 psig) Over a period of 24 hours.

12.5.1.4 Section 11.1 requires that all canisters be certified clean (containing less than 0.2 ppbv of targeted VOCs) through a humid zero air certification program.

12.5.1.5 Section 11.2.2 requires all field sampling systems to be certified initially clean (containing less than 0.2 ppbv of targeted VOCs) through a humid zero air certification program.

12.5.1.6 Section 11.2.3 requires all field samoiing systerns to pass an initial humidified calibration gas certification [at VOC concentration levels expected in the field (e.g., 0.5 to 2 ppov)] with a percent recovery of greater than 90.

12.5.2 GC-MS-SCAN-SIM System Performance Criteria

12.5.2.1 Section 10.2.1 requires the GC-MS analytical system to be certified clean less than 0.2

ppbv of targeted VOCs) prior to sample analysis, through a humid zero air certification.

12.5.2.2 Section 10.2.2 requires the daily tuning of the GC-MS with 4-bromofluorobenzene (4-BFB) and that it meet the key ions and ion abundance criteria (10%) outlined in Table 5.

12.5.2.3 Section 10.2.3 requires both an initial multipoint humid static calibration (three levels plus humid zero air) and a daily calibration (one point) of the GC-MS analytical system.

12.5.3 GC-Multidetector System Performance Criteria

12.5.3.1 Section 10.3.1 requires the GC-FID-ECD analytical system, prior to analysis, to be certified clean (less than 0.2 ppbv of targeted VOCs) through a humid zero air certification.

12.5.3.2 Section 10.3.2 requires that the GC-FID-ECD analytical system establish retention time windows for each analyte prior to sample analysis, when a new GC column is installed, or major components of the GC system altered since the previous determination.

12.5.3.3 Section 8.2 requires that all calibration gases be traceable to a National Bureau of Standards (NBS) Standard Reference Material (SRM) or to a NBS/EPA approved Certified Reference Material (CRM).

12.5.3.4 Section 10.3.2 requires that the retention time window be established throughout the course of a 72-hr analytical period.

12.5.3.5 Section 10.3.3 requires both an initial multipoint calibration (three levels plus humid zero air) and a daily calibration (one point) of the GC-FID-ECD analytical system with zero gas dilution of NBS traceable or NBS/EPA CRMs gases. [Note: Gas cylinders of VOCs at the 20ppm and 200 level are available for audits from the USEPA, Environmental Monitoring Systems

0001496

recycled paper

Laboratory, Quality Assurance Division, MD-77B, Research Triangle Park, NC 27711, (919)541-4531. Appendix A outlines five groups of audit gas cylinders available from USEPA.]

13. Acknowledgements

The determination of volatile and SON semi-volatile organic canpounds in ambient air is a complex task, primarily because of the wide variety of compounds of interest and the lack of standardized sampling and analytical procedures. While 'there are numerous procedures for sampling and analyzing VOCs/SVOCs in ambient air, this method draws upon the best aspects of each one and combines them into a standardized methodology. To that end, the following individuals contributed to the research. documentation and peer review of this manuscript.

Topic	Contact	Address	Telephone No.
Sampling System	Mr. Frank McElroy Mr. Vince Thompson	U.S. Environmental Protection Agency Environmental Monitoring Systems Laboratory MD-77 Research Triangle Park, N.C. 27711	919-541-2622 919-541-3791
	Dr. Bill McClenny Mr. Joachim Pleil	U.S. Environmental Protection Agency Environmental Monitoring Systems Laboratory MD-44 Research Triangle Park, N.C. 27711	919-541-3158 919-541-4680
	Mr. Tom Merrifield	Anderson Samplers, Inc. 4215-C Wendell Drive Atlanta, GA 30336	1-800-241-6898
	Mr. Joseph P. Krasnec	Scientific Instrumentation Specialists, Inc. P.O. Box 8941 Moscow, Idaho, 83843	208-882-3860
Analytical System			
GC-FID	Mr. Vince Thompson	U.S. Environmental Protection Agency Environmental Monitoring Systems Laboratory MD-77 Research Triangle Park, N.C. 27711	919-541-3791
GC-FID-ECD	Dr. Bill McClenny Mr. Joachim Pleil	U.S. Environmental Protection Agency Environmental Monitoring Systems Laboratory MD-44 Research Triangle Park, N.C. 27711	919-541-3158 919-541-4680
	Ms Karen W. Oliver	Northrop Services, Inc. Environmental Sciences P.O. Box 12313 Research Triangle Park, N.C. 27709	919-549-0611
GC-FID-ECD-PID	Dave-Paul Dayton JoAnn Rice	Radian Corporation P.O. Box 13000 Progress Center Research Triangle Park, N.C. 27709	919-481-0212

recycled paper

00001497

ecology and environment

Topic	Contact	Address	Telephone No.
CIS-SCAN-SIM	Dr. Bill McClenny Mr. Joachim Pleil	U.S. Environmental Protection Agency Environmental Monitoring Systems laboratory MD-44 Research Triangle Park, N.C. 27711	919-541-3158 919-541-4680
	Mr. John V. Hawkins	Research Triangle Laboratories, Inc. P.O. Box 12507 Research Triangle Park, N.C. 27709	919-544-5775
Canister Cleaning Certification and VOC Canister Storage Stability	Mr. Vince Thompson	U.S. Environmental Protection Agency Environmental Monitoring Systems Laboratory HD-77 Research Triangle Park, N.C. 27711	919-541-3791
	Dr. Bill McClenny Mr. Joachim Pleil	U.S. Environmental Protection Agency Environmental Monitoring Systems Laboratory MD-44 Research Triangle Park, N.C. 27711	919-541-3158 919-541-4680
	Dave-Paul Dayton JoAnn Rice	Radian Corporation P.O. Box 13000 Progress Center Research Triangle Park, N.C. 27709	919-481-0212
	Dr. R.K.M. Jayanty	Research Triangle Institute P.O. Box 12194 Research Triangle Park, N.C. 27709	919-541-6000
Cryogenic Sampling Unit	Mr. Lou Ballard Mr. Pete Watson	NuTech Corporation 2806 Cheek Road Durham, N.C., 27704	919-682-0402
	Mr. Joachim Pleil	U.S. Environmental Protection Ayency Envlronmental Monitorlng Systems Laboratory MD-44 Research Trlangle Park, N.C. 27711	919-541-4680
U.S. EPA Audit Gas Standards	Mr. Bob Lampe	U.S. Environmental Protection Ayency Environmental Monitoring Systems Laboratory MD-77B Research Triangle Park, N.C. 27711	919-541-4531

14. REFERENCES

10 K. D. Oliver, J. D. Pleil, a d W. A McClenny, "Sample Integrity of Trace Level Volatile Organic Compounds in Ambient Air Stared in SUMMA® Poll shed Canisters," Atmospheric Environ. 20:1403, 1986.

2. M. W. Holdren and D. L. Smith, 'Stability of Volatile Organic Compounds While Stored in SUMMA® Polished Stainless Steel Canisters," Ffnal Report, EPA Contract No. 68-02-4327, Research Triangle Park, NC, Battelle Columbus Laboratories, January, 1986.

3. Ralph M. Riggin, Technical Assistance Document for Sampling and Analysis of Toxic Organic Compounds in Ambient Air, EPA-600/4-83-027, U.S. Environmental Protection Agency, Research Triangle Park, NC, 1983.

4. Ralph M. Riggin, Compendium of Methods for the Determination of Toxic Organic Compounds in Ambient Air, EPA-600/4-84-041, U.S. Environmental Protection Agency, Research Triangle Park, NC, 1986.

5. W. T. Winberry and N. Y. Tilley, Supplement to EPA-600/4-84-041: Compendium of Methods for the Determination of Toxic Organic Compounds in Ambient Air, EPA-600/4-87-006, U.S. Environmental Protection Agency, Research Triangle Park, NC, 1986.

6. W. A McClenny, J. D Pleil, J. W. Holdren, and R. N. Smith, "Automated Cryogenic Preconcentration and Gas Chromatographic Determination of Volatile Organic Compounds," Anal. Chem. 56:2947, 1984.

7. 3. D. Pleil and K. 0. Oliver, "Evaluation of Various Configurations of Nafion Dryers: Water Removal from Air Samples Prior to Gas Chromatographic Analysis,' EPA Contract No. 68-02-4035, Research Triangle Park, NC, Northrop Services, Inc.- Environmental Sciences, 1985.

8. K. O. Oliver and J. 0. Pleil, "Automated Cryogenic Sampling and Gas Chromatographic Analysis of Ambient Vapor-?base Organic Compounds: Procedures and Comparison Tests," EPA Contract No. 68-02-4035, Research Triangle Part, NC, Northrop Services, Inc.- Environmental Sciences, 1985.

9. W. A McClenny and J. 0. Pleil, "Automated Calibration and Analysis of VOCs with a Capillary Column Gas Chromatograph Equipped for Reduced Temperature Trapping,' Proceedings of the 1984 Air Pollution Control Association Annual Meeting, San Francisco, CA, June 24-29, 1984.

30. W. A. McClenny, J. D. Pleil, T. A. Lumpkin, and K. D. Oliver, "Update on Canister-Based Samplers for VOCs," Proceedings of the 1987 EPA/APCA Symposium on Measurement of Toxic and Related Air Pollutants, May, 1987 APCA Publication VIP-8, EPA 600/9-87-010.

11. J. D. Pleil, "Automated Cryogenic Sampling and Gas Chromatographic Analysis of Ambient Vapor-Phase Organic Compounds: System Design," EPA Contract No. 68-02-2566, Research Triangle Park, NC, Northrop Services, Inc.- Environmental Sciences, 1982.

12. K 0. Oliver and J. 0. Pleil, "Analysis of Canister Samples Collected During the CAR8 Study in August 1986," EPA Contract NO. 68-02-4035, Research Triangle Park, NC, Northrop Services, Inc,- Environmental Sciences, 1987.

13. J. D. Pleil and K. D. Oliver, "Measurement of Concentration Variability of Volatile Organic Compounds in Indoor Air: Automated Operation of a Sequential Syringa Sampler and Subsequent GC/MS Analysis,' EPA Contract No. 68-02-4444, Research Triangle Park, NC, Northrop Services, Inc. - Environmental Sciences, 1987.

14. J. F. Walling, "The Utility of Distributed Air Volume Sets When Sampling Ambient Air Using-Solid Adsorbents," Atmospheric Environ., 18:855-859, 1984.

15. J. F. Walling, J. E. Bumgarner, J. D. Driscoll, C. M. Morris, A. E. Riley, and L. H. Wright, 'Apparent Reaction Products Desorbed From Tenax Used to Sample Ambient Air," Atmospheric Environ., 20: 51-57, 1986.

16. Portable Instruments User's Manual for Monitoring VOC Sources, EPA-340/1-88-015, US. Environmental Protection Agency, Office of Air Quality Planning and Standards, Washington, DC, June, 1986.

17. F. F. McElroy, V. L. Thompson, H. G. Rfchter, A Cryogenic Preconcentration - Direct FID (PDFID) Method for Measurement of NMOC in tne Ambient Air, EPA-600/4-85-063, U.S. Environmental Protection Agency, Research Triangle Park, NC, August 1985.

18. R. A. Rasmussen and J. E. Lovelock, "Atmospheric Measurements Using Canister Technology,' J. Geophys. Res., 83: 8369-8378, 1983.

19. R. A. Rasmussen and M.A.K. Khalil, 'Atmospheric Halocarbons: Measurements and Analysis of Selected Trace Gases,* Proc. NATO ASI on Atmospheric Ozone, B0: 209-231.

20. Dave-Paul Dayton and JoAnn Rfce, "Development and Evaluation of a Prototype Analytical System for Measuring Air Toxics," Final Report, Radian Corporation for the U.S. Environmental Protection Agency, Environmental Monitoring Systems Laboratory, Research Triangle Park, NC 27711, EPA Contract No. 68-02-3889, WA No. 120, November, 1987.

0001499

TABLE 1. VOLATILE ORGANIC [illegible] DATA SHEET

COMPOUND (SYNONYM)	FORMULA	MOLECULAR WEIGHT	BOILING POINT (°C)	MELTING POINT (°C)	CAS NUMBER
Freon 12 (Dichlorodifluoromethane)	Cl_2CF_2	120.91	-29.8	-158.0	
Methyl chloride (Chloromethane)	CH_3Cl	50.49	-24.2	-97.1	74-87-3
Freon 114 (1,2-Dichloro-1,1,2,2-tetrafluoroethane)	$ClCF_2CClF_2$	170.93	4.1	-94.0	
Vinyl chloride (Chloroethylene)	$CH_2{=}CHCl$	62.50	-13.4	-1538.0	75-01-4
Methyl bromide (Bromomethane)	CH_3Br	94.94	3.6	-93.6	74-83-9
Ethyl chloride (Chloroethane)	CH_3CH_2Cl	64.52	12.3	-136.4	75-00-3
Freon 11 (Trichlorofluoromethane)	CCl_3F	137.38	23.7	-111.0	
Vinylidene chloride (1,1-Dichloroethene)	$C_2H_2Cl_2$	96.95	31.7	-122.5	75-35-4
Dichloromethane (Methylene chloride)	CH_2Cl_2	84.94	39.8	-95.1	75-09-2
Freon 113 (1,1,2-Trichloro-1,2,2-trifluoroethane)	CF_2ClCCl_2F	187.38	47.7	-36.4	
1,1-Dichloroethane (Ethylidene chloride)	CH_3CHCl_2	98.96	57.3	-97.0	74-34-3
cis-1,2 Dichloroethylene	$CHCl{=}CHCl$	96.94	60.3	-80.5	
Chloroform (Trichloromethane)	$CHCl_3$	119.38	61.7	-63.5	67-66-3
1,2-Dichloroethane (Ethylene dichloride)	$ClCH_2CH_2Cl$	98.96	83.5	-35.3	107-06-2
Methyl chloroform (1,1,1-Trichloroethane)	CH_3CCl_3	133.41	74.1	-30.4	71-55-6
Benzene (Cyclohexatriene)	C_6H_6	78.12	80.1	5.5	71-43-2
Carbon tetrachloride (Tetrachloromethane)	CCl_4	153.82	76.5	-23.0	56-23-5
1,2-Dichloropropane (Propylene dichloride)	$CH_3CHClCH_2Cl$	112.99	96.4	-100.4	78-87-5
Trichloroethylene (Trichloroethene)	$ClCH{=}CCl_2$	131.29	87	-73.0	79-01-6
cis 1,3 Dichloropropene (cis-1,3-dichloropropylene)	$CH_3CCl{=}CHCl$	110.97	76		

recycled paper
Department of Environment

T014-60

TABLE 1. VOLATILE ORGANIC COMPOUND DATA SHEET (cont.)

COMPOUND (SYNONYM)	FORMULA	MOLECULAR WEIGHT	BOILING POINT(°C)	MELTING POINT (°C)	CAS NUMBER
trans-1,3-Dichloropropene (cis-1,3-Dichloropropylene)	$ClCH_2CH{=}CHCl$	110.97	112.0		
1,1,2-Trichloroethane (Vinyl trichloride)	$CH_2ClCHCl_2$	133.41	113.8	-36.5	79-00-5
Toluene (Methyl benzene)	$C_6H_5CH_3$	92.15	110.6	-95.0	108-88-3
1,2-Dibromoethane (Ethylene dibromide)	$BrCH_2CH_2Br$	187.88	131.3	9.8	106-93-4
Tetrachloroethylene (Perchloroethylene)	$Cl_2C{=}CCl_2$	165.83	121.1	-19.0	127-18-4
Chlorobenzene (Phenyl chloride)	C_6H_5Cl	112.56	132.0	-45.6	108-90-7
Ethylbenzene	$C_6H_5C_2H_5$	106.17	136.2	-95.0	100-41-4
m-Xylene (1,3-Dimethylbenzene)	$1,3\text{-}(CH_3)_2C_6H_4$	106.17	139.1	-47.9	
p-Xylene (1,4-Dimethylxylene)	$1,4\text{-}(CH_3)_2C_6H_4$	106.17	138.3	13.3	
Styrene (Vinyl benzene)	$C_6H_5CH{=}CH_2$	104.16	145.2	-30.6	100-42-5
1,1,2,2-Tetrachloroethane	$CHCl_2CHCl_2$	167.85	146.2	-36.0	79-34-5
o-Xylene (1,2-Dimethylbenzene)	$1,2\text{-}(CH_3)_2C_6H_4$	106.17	144.4	-25.2	
1,3,5-Trimethylbenzene (Mesitylene)	$1,3,5\text{-}(CH_3)_3C_6H_6$	120.20	164.7	-44.7	108-67-8
1,2,4-Trimethylbenzene (Pseudocumene)	$1,2,4\text{-}(CH_3)_3C_6H_6$	120.20	169.3	-43.8	95-63-6
m-Dichlorobenzene (1,3-Dichlorobenzene)	$1,3\text{-}Cl_2C_6H_4$	147.01	173.0	-24.7	541-73-1
Benzyl chloride (α-Chlorotoluene)	$C_6H_5CH_2Cl$	126.59	179.3	-39.0	100-44-7
o-Dichlorobenzene (1,2-Dichlorobenzene)	$1,2\text{-}Cl_2C_6H_4$	147.01	180.5	-17.0	95-50-1
p-Dichlorobenzene (1,4-Dichlorobenzene)	$1,4\text{-}Cl_2C_6H_4$	147.01	174.0	53.1	106-46-7
1,2,4-Trichlorobenzene	$1,2,4\text{-}Cl_3C_6H_3$	181.45	213.5	17.0	120-82-1
Hexachlorobutadiene (1,1,2,3,4,4-Hexachloro-1,3-butadiene)					

TABLE 2. ION/ABUNDANCE AND EXPECTED RETENTION TIME FOR SELECTED VOCs ANALYZED BY GC-MS-SIM

Compound	Ion/Abundance (amu/% base peak)	Expected Retention Time (min)
Freon 12 (Dichlorodifluoromethane)	85/100 87/ 31	5.01
Methyl chloride (Chloromethane)	50/100 52/ 34	5.69
Freon 114 (1,2-Dichloro-1,1,2,2-tetrafluoroethane)	85/100 135/ 56 87/ 33	6.55
Vinyl chloride (Chloroethene)	62/100 27/125 64/ 32	6.71
Methyl bromide (Bromomethane)	94/100 96/ 85	7.83
Ethyl chloride (Chloroethane)	64/100 29/140 27/140	8.43
Freon 11 (Trichlorofluoromethane)	101/100 103/ 67	9.97
Vinylidene chloride (1,1-Dichloroethylene)	61/100 96/ 55 63/ 31	10.93
Dichloromethane (Methylene chloride)	49/100 84/ 65 86/ 45	11.21
Freon 113 (1,1,2-Trichloro-1,2,2-trifluorocthana)	151/100 101/140 103/ 90	11.60
1,1-Dichloroethane (Ethylidene dichloride)	63/100 27/ 64 65/ 33	12.50
cis-1,2-Dichloroethylene	61/100 96/ 60 98/ 44	13.40
Chloroform (Trichloromethane)	83/100 85/ 65 47/ 35	13.75
1,2-Dichloroethane (Ethylene dichloride)	62/100 27/ 70 64/ 31	14.39
Methyl chloroform (1,1,1-Trichloroethane)	97/100 99/ 64 61/ 61	14.62
Benzene (Cyclohexatriene)	78/100 77/ 25 50/ 35	15.04
Carbon tetrachloride (Tetrachloromethane)	117/100 119/ 97	15.18

TAU 2 ION/ABUNDANCE AND EXPECTED RETENTION TIME FOR SELECTED VOCs ANALYZED BY GC-MS-SIM (cont.)

Comoound	Ion/Abundance (amu/% base peak)	Estimated Retention Time (min)
1,2-Dichloropropane (Propylene dichloride)	63/100 41/ 90 62/ 70	15.83
Trichloroethylene (Trichloroethene)	130/100 132/ 92 95/ a7	16.10
cis-1,3-Dichloropropene	75/100 39/ m 77/ 30	16.96
trans-1,3-Dichloropropene (1.3 dichloro-1-propene)	75/100 39/ 70 77/ 30	17.49
1,1,2-Trichloroethane (Vinyl trichloride)	97/100 83/ 90 61/ 82	17.61
Toluene (Methyl benzene)	91/100 92/ 57	17.86
1,2-Dibromoethane (Ethylene dibromide)	107/100 109/ 96 27/115	18 048
Tetrachloroethylene (Perchloroethylene)	166/100 164/ 74 131/ 60	19 001
Chlorobenzene (Benzene chloride)	112/100 77/ 62 114/ 32	19.73
Ethylbenzene	91/100 106/ 28	20.20
m,p-Xylene(1,3/1,4-dimethylbenzene)	91/100 106/ 40	20.41
Styrene (Vinyl benzene)	104/100 78/ 60 103/ 49	20.81
1,1,2,2-Tetrachloroethane (tetrachloroethane)	83/100 85/ 54	20.92
o-Xylene (1,2-Dimethylbenzene)	91/100 106/ 40	20.92
4-Ethyltoluene	105/100 120/ 29	22.33
1,3,5-Trimethylbenzene (Mesitylene)	105/100 120/ 42	22.65
1,2,4-Trimethylbenzene (Pseudocumene)	105/100 120/ 42	23.18
m-Dichlorobenzene (1,3-Dichlorobenzene)	146/100 148/ 65 [illegible]	23.31

(continued)

TABLE 2, ION/ABUNDANCE AND EXPECTED RETENTION TIME FOR SELECTED VOCs ANALYZED BY GC-MS-SIM (cont.)

Compound	Ion/Abundance (am/%base peak)	Expected Retention Tim (min)
Benzyl chloride (α-Chlorotoluene)	91/100 126/ 26	23.32
p-Dichlorobenzene (I,4-Dichlorobenzene)	146/100 148/ 65 111/ 40	23.41
o-Dichlorobenzene (1,2-Dichlorobenzene)	146/100 148/ 65 111/ 40	23.88
1,2,4-Trichlorobenzene	180/100 182/ 98 184/ 30	26.71
Hexachlorobutadiene (1,1,2,3,4,4 Hexachloro-1,3-butadiene)	225/100 227/ 66 223/ 60	27.68

0001501

TABLE 3. GENERAL GC AND MS OPERATING CONDITIONS

Chromatography	
Column	Hewlett-Packard OV-1 crosslinked methyl silicone (SO m x 0.31-mm I.D., 17 um film thickness), or equivalent
Carrfet 6as	Helium (2.0 cm^3/min at 250°C)
Injection Volume	Constant (1-3 uL)
Injection Mode	Splitless
Temperature Program	
ial : Temperature	-50°C
Initial Hold Time	2 min
Program	to 150°C
Final Hold Time	15 min
Mas Spectrometer	
Mass Range	18 to 250 amu
Scan Time	1 sec/scan
EI Condition	70 eV
Mass Scan	Follow manufacturer's instruction for selecting mass selective detector (MS) and selected ion monitoring (SIM) mode
Detector Made	Multiple ion detection
FID System (Optional)	
Hydrogen Flow	30 cm^3/minute
Carrier Flow	30 cm^3/minute
Burner Air	400 cm^3/minute

TABLE 4. 4-BROMOFLUOROBENZENE KEY IONS AND ION ABUNDANCE CRITERIA

Mass	Ion Abundance Criteria
50	15 to 40% of mass 95
75	30 to 60% of mass 95
95'	Base Perk, 100% Relative Abundance
96	5 to 9% of mass 95
173	<2% of mass 174
'174	>50% of mass 95
175.	5 to 9% of mass 174
176	>95% but< 101% of mass 174
177	5 to 9% of mass 176

recycled paper

ecology and environment

TABLE 5. RESPONSE FACTORS (ppbv/area count) AND EXPECTED RETENTION TIE FOR GC-MS-SIM ANALYTICAL CONFIGURATION

Compounds	Response Factor (ppbv/area count)	Expected Retention Time (minutes)
Freon 12	0.6705	5.01
Methyl chloride	4.093	5.64
Freon 114	0.4928	6.55
Vinyl chloride	2,343	6.71
Methyl bromide	2,647	7.83
Ethyl chloride	2,954	8.43
Freon 11	0.5145	9.87
Vinylidene chloride	1.037	10.93
Dichloromethane	2,255	11.21
Trichlorotrifluorocthanc	0,9031	11.60
1,1-Dichlorocthane	1.273	12.50
cis-1,2-Dichloroethylenc	1,363	13.40
Chloroform	0.7911	13.75
1,2-Dichloroethane	1.017	14.39
Methyl chloroform	0.7078	14.62
Benzene	1,236	15.04
Carbon tctrachloride	0.5880	15.18
1,2-Dichloropropane	2,400	15.83
Trichloroethylene	1,383	16.10
cis-1,3-Dichloropropene	1.877	16.96
trans-1,3-Dichloropropene	1,338	17.49
1,1,2-Trichloroefhanc	1.891	17.61
Toluene	0,9406	17.36
1,2-Dibromoethanc (EDB)	0.8662	18.48
Tetrachloroethylene	0.7357	19.01
Chlorobenzene	0.3558	19.73
Ethylbenzene	0.6243	20.20
m,p-Xylene	0.7367	20.41
Styrene	1.888	20.80
1,1,2,2-Tetrachloroethane	1.035	20.92
o-Xylene	0.7498	20.92
4-Ethyltoluene	0.5181	22.53
1,3,5-Trimethylbenzene	9.7088	22.55
1,2,4-Trimethylbenzene	0.7536	23.18
m-Dichlorobenzene	3.3643	23.31
Benzyl chloride	1.420	23.32
p-Dichlorobenzene	0.8912	23.41
o-Dichlorobenzene	1.004	23.88
1,2,4-Trichlorobenzene	2.150	25.71
Hexachlorobutadiene	0.4117	27.68

TABU 6, GC-MS-SIM CALIBRATION T A U

*** External Standard ***

Operator: JDP 8 Jan 87 10:02 am
Sample Info : SYR 1
Misc Info:
Integration File Name : DATA:SYR0A02A.I
Sequence Index: 1 Bottle Number : 2

Last Update: 8 Jan 87 8:13 am
Reference Peak Window: 5.00 Absolute Minutes
Non-Reference Peak Window: 0.40 Absolute Minutes
Sample Amount: 0.000 Uncalibrated Peak RF: 0.000 Multiplier: 1.667

Peak Num	Type	Int Type	Ret Time	Signal Description			Compound Name	Area	Amount	
1		1	PP	5.020	Mass	85.00	amu FREON 12	12593	4011 ppbv	
2		1	PP	5.654	Mass	50.00	amu METHYLCHLORI	4445	2586 ppbv	
3		1	BP	6.[illegible]	Mass	85.00	amu FREON 114	7067	1215 ppbv	
4		1	PB	6.650	Mass	62.00	amu VINYLCHLORID	2892	1929 ppbv	*
5		1	BP	7.818	Mass	94.00	amu METHYLBROMID	2401	1729 ppbv	
6		1	BB	8.421	Mass	64.00	amu ETHYLCHLORID	2134	2768 ppbv	*
7		1	BV	9.940	Mass	101.00	amu FREON 11	25069	6460 ppbv	
8		1	BP	10.869	Mass	61.00	amu VINDENECHLOR	5034	1700 ppbv	
9		1	BP	11.187	Mass	49.00	amu DICHLOROMETH	4803	2348 ppbv	
10		1	PP	11.[illegible]	Mass	41.00	amu ALLYLCHLORID	761	8247 ppbv	*
11		1	BP	11.578	Mass	151.00	amu DCHL3FLUETHA	5477	1672 ppbv	
12		1	BP	12.492	Mass	63.00	amu 1,1DICHLOETH	5022	1732 ppbv	*
13		1	VP	13.394	Mass	61.00	amu c-1,2DICHLET	4761	1970 ppbv	
14		1	PM	13.713	Mass	83.00	amu CHLOROFORM	5027	1678 ppbv	
15		1	BP	14.378	Mass	62.00	amu 1,2DICHLETHA	5009	2262 ppbv	
16		1	PB	14.594	Mass	97.00	amu METHCHLOROFO	6656	[illegible] ppbv	
17		1	VP	15.009	Mass	78.00	amu BENZENE	8522	2167 ppbv	
18		1	VP	15.154	Mass	117.00	amu CARBONTETRAC	5988	1915 ppbv	
19		1	BB	15.321	Mass	63.00	amu 1,2DICHLPROP	2235	1799 ppbv	*
20		1	BB	16.067	Mass	130.00	amu TRICHLETHENE	4386	2109 ppbv	
21		1	PB	16.941	Mass	75.00	amu c-1,3DICHLPR	2228	967.2 ppbv	
22		1	BP	17.475	Mass	75.00	amu t-1,3DICHLPR	1626	689.2 ppbv	
23		1	BB	17.594	Mass	97.00	amu 1,1,2CHLETHA	2721	1772 ppbv	
24		1	BV	17.844	Mass	91.00	amu TOLUENE	14417	2722 ppbv	
25		1	PB	18.443	Mass	107.00	amu EDB	4070	1365 ppbv	*
26		1	PM	18.989	Mass	166.00	amu TETRACHLETHE	6674	2065 ppbv	
27		1	PB	19.705	Mass	112.00	amu CHLOROBENZEN	5648	1524 ppbv	
28		1	BP	20.168	Mass	91.00	amu ETHYLBENZENE	11084	1842 ppbv	
29		1	PB	20.272	Mass	91.00	amu m,p-XYLENE	17989	2790 ppbv	
30		1	BV	20.778	Mass	104.00	amu STYRENE	3142	1695 ppbv	
31		1	BM	20.387	Mass	83.00	amu TETRACHLETHA	4521	1276 ppbv	
32		1	BP	20.392	Mass	91.00	amu o-XYLENE	9798	2010 ppbv	
33		1	VV	22.488	Mass	105.00	amu 4-ETHYLTOLUE	7694	1481 ppbv	
34		1	VB	22.609	Mass	105.00	amu 1,3,5METHBEN	6781	1705 ppbv	
35		1	BB	22.144	Mass	105.00	amu 1,2,4METHBEN	7892	2092 ppbv	
36		1	BV	22.272	Mass	146.00	amu m-DICHLBENZE	3046	1119 ppbv	
37		1	VV	22.279	Mass	91.00	amu BENZYLCHLORI	3880	1006 ppbv	
38		1	VB	22.578	Mass	146.00	amu p-DICHLBENZE	6090	2164 ppbv	
39		1	BP	22.850	Mass	146.00	amu o-DICHLBENZE	2896	1249 ppbv	
40		1	BB	23.277	Mass	180.00	amu 1,2,4CHLBENZ	[illegible]	[illegible] ppbv	
41		1	BB	27.[illegible]	Mass	[illegible]	amu TETRACHLETHE	[illegible]	[illegible] ppbv	

recycled paper

ecology and environment

TABLE 7. TYPICAL RETENTION TIME (MIN) AND CALIBRATION RESPONSE FACTORS (ppbv/area count) FOR TARGETED VOCs ASSOCIATED WITH FID AND ECD ANALYTICAL SYSTEM

Peak Number[1]	Compound	Retention Time (RT), minutes	no Response Factor (RF) (ppbv/area count)	ECD Response Factor (ppbv/area count x 10^{-5})
1	Freon 12	3.65	3.465	13.89
2	Methyl chloride	4.30	0.693	
3	Freon 114	5.13	0.578	22.32
4	Vinyl chloride	5.28	0.406	
5	Methyl bromide	6.44		26.34
6	Ethyl chloride	7.06	0.413	
7	Freon 11	8.60	6.367	1.367
8	Vinylidene chloride	9.51	0.347	
9	Olchloromethane	9.84	0.903	
10	Trichlorotrifluoroethane	10.22	0.374	3.955
11	1,1-Dichloroethane	11.10	0.359	
12	cis-1,2-Dichloroethylene	11.99	0.368	
13'	Chloroform	12.30	1.059	11.14
14	1,2-Dichloroethane	12.92	0.409	
15	Methyl chloroform	13.12	0.325	3.258
16	Benzene	13.51	0.117	
17	Carbon tetrachloride	13.64	1.451	1.077
10	1,2-Dichloropropane	14.26	0.214	
19	Trichloroethylene	14.50	0.327	8.910
20	cis-1,3-Dichloroprooene	15.31		
21	trans-1,3-Dichloropropene	15.83		
22	1,1,2-Trichloroethane	15.93	0.336	
23	Toluene	16.17	0.092	
24	1,2-Dibromoethane (EDB)	16.78	0.366	5.137
25	Tetrachloroethylene	17 a31	0.3 24	1.449
26	Chlorobentene	18.03	0.120	
27	Ethylbenzene	18.51	0.092	
28	m,p-Xylene	18.72	0.095	
29	Styrene	19.12	0,143	
30	1,1,2,2-Tetrachloroethane	19.20		9.856
31	o-Xylene	19.23		
32	4-Ethyltoluene	20.82	0.100	
33	1,3,5-Trimethylbenzene	20.34	3.109	
34	1,2,4-Trimethylbenzene	21.46	0.111	
35	m-Dichlorobenzene	21.50		
36	Benzyl chloride	21.56		
37	p-Dichlorobenzene	21.57	0.188	
38	o-Dichlorooenrene	22.12	0.188	
39	1,2,4-Trichlorobenzene	24.88	0.667	
40	Hexachlorobutadiene	25.82	0.305	i.055

[1] Refer to Figures 13 and 14 for peak location

TABLE 8. TYPICAL RETENTION TIME (minutes) FOR SELECTED ORGANICS USING GC-FID-ECD-PID* ANALYTICAL SYSTEM

Compound	Retention Time (minutes)		
	FID	K O	PID
Acctylene	2.984	--	--
1,3-Butadienc	3.599	--	3.594
Vinyl chloride	3.790	--	3.781
Chloromethane	5.137	--	--
Chloroethrnt	5.738	--	--
Bromoethant	8.154	--	--
Methylene Chloride	9.232	--	9.218
trans-1,2-Dichloroethylenc	10.077	--	10.065
1,1-Dichloroethane	11.190	--	--
Chloroprene	11.502	--	11.491
Perfluorobenzene	13.077	13.078	13.069
Bromochloromethane	13.397	13.396	13.403
Chlorofonn	13.768	13.767	13.771
1,1,1-Trichloroethane	14.151	14.153	14.158
Carbon Tetrrchloride	14.642	14.667	14.686
Benzene/1,2-Dichlotoethane	15.128	--	15.114
Perfluorotoluene	15.420	15.4 25	15.412
Trichloroethylene	17.022	17.024	17.014
1,2-Dichloropropene	17.491	17.805	17.522
Bromodichloromethane	18.369	--	--
trans-1,3-Dichloropropylene	19.694	19.693	19.688
Toluene	20.658	--	20.653
cis-1,3-Dichloropropylene	21.461	21.357	21.357
1,1,2-Trichloroethane	21.823	--	--
Tetrachloroethylene	22.3 40	22.346	22.335
Oibrunochloromethane	22.955	22.959	22.952
Chlorobenzene	24.866	--	24.861
m/p-Xylene	25.763	--	25.757
Styrene/o-Xylene	27.036	--	2'1.030
Bromofluorobenrene	28.665	28.663	28.660
1,1,2,2-Tetrachloroethane	29.225	29.227	29.228
m-Dichlorobenzene	32.347	32.345	32.342
p-Dichlorobenzene	32.671	32.669	32.666
o-Dichlorobenzene	33.885	33.883	33.880

* Varian® 3700 GC equipped with J & W Megabore® OB 624 Capillary Column (30 m X 0.53 I.D. mm) using helium carrier gas.

T014-71

TABLE 9. GC-MS-SIM CALIBRATION TABLE

Last Update: 18 Dec 86 7:54 am
Reference Peak Window: 5.00 Absolute Minutes
Non-Reference Peak Window: 0.40 Absolute Minutes
Sample Amount: 0.000 Uncalibrated Peak RF: 0.000 Multiplier: 1.000

Rot Time	Pk#	Signal	Descr		Amt ppbv	Lvl	(Area)	Pk-Type	Partial Name
5.008	1	Mass	85.00	amu	13620	1	72974	1	FREON 12
5.690	2	Mass	50.00	amu	12720	1	36447	1	METHYLCHLORID
6.552	3	Mass	85.00	amu	8380	1	81251	1	FREON 114
6.709	4	Mass	62.00	amu	8050	1	20118	1	VINYLCHLORIDE
7.831	5	Mass	V4.00	amu	12210	1	28265	1	METHYLBROMIDE
8.431	6	Mass	64.00	amu	12574	1	16149	1	ETHYLCHLORIDE
V.170	7	Mass	101.00	amu	12300	1	80088	1	FREON 11
10.927	8	Mass	61.00	amu	7890	1	38954	1	VINDENECHLORI
11.209	9	Mass	49.00	amu	12760	1	43507	1	DICHLOROMETHA
11.551	10	Mass	41.00	amu	12650	1	1945	1	ALLYLCHLORIDE
11.595	11	Mass	151.00	amu	7420	1	40530	1	3CHLOFLUETHAN
12.502	12	Mass	63.00	amu	12710	1	61595	1	1,1DICHLOETHA
13.403	13	Mass	61.00	amu	12630	1	50900	1	c-1,2DICHLETH
13.747	14	Mass	83.00	amu	7670	1	40585	1	CHLOROFORM
14.387	15	Mass	62.00	amu	9040	1	33336	1	1,2DICHLETHAN
14.623	16	Mass	97.00	amu	8100	1	38503	1	METHCHLOROFOR
15.038	17	Mass	78.00	amu	10760	1	69119	1	BENZENE
15.183	18	Mass	117.00	amu	8340	1	42737	1	CARBONTETRAC
15.829	19	Mass	63.00	amu	12780	1	38875	1	1,2DICHLPROPA
16.096	20	Mass	130.00	amu	8750	1	30331	1	TRICHLETHENE
16.956	21	Mass	75.00	amu	4540	1	17078	1	c-1,3DICHLPRO
17.492	22	Mass	75.00	amu	3380	1	13294	1	t-1,3DICHLPRO
17.610	23	Mass	97.00	amu	12690	1	32480	1	1,1,2CHLETHAN
17.862	24	Mass	91.00	amu	10010	1	86036	1	TOLUENE
18.485	25	Mass	107.00	amu	4710	1	33350	1	EDB
19.012	26	Mass	166.00	amu	7930	1	43454	1	TETRACHLETHEN
19.729	27	Mass	112.00	amu	7140	1	44224	1	CHLOROBENZENE
20.195	28	Mass	91.00	amu	12740	1	127767	1	ETHYLBENZENE
20.407	29	Mass	91.00	amu	25400	1	200973	1	m,p-XYLENE
20.806	30	Mass	104.00	amu	12390	1	38332	1	STYRENE
20.916	31	Mass	83.00	amu	11690	1	64162	1	TETRACHLETHAN
20.921	32	Mass	91.00	amu	11085	1	90096	1	o-XYLENE
22.[illegible]	[illegible]	Mass	105.00	amu	12560	1	108747	1	4-ETHYLTOLUEN
22.648	—	Mass	105.00	amu	12620	1	83666	1	1,3,5METHBENZ
23.179	35	Mass	105.00	amu	12710	1	79833	1	1,2,4METHBENZ
23.307	36	Mass	146.00	amu	12650	1	57409	1	m-DICHLBENZEN
23.317	37	Mass	91.00	amu	7900	1	50774	1	BENZYLCHLORID
23.413	38	Mass	146.00	amu	12590	1	58127	1	p-DICHLBENZEN
23.885	39	Mass	146.00	amu	13510	1	52233	1	o-DICHLBENZEN
26.714	40	Mass	180.00	amu	13520	1	18967	1	1,2,4CHLBENZE
27.680	41	Mass	225.00	amu	7470	1	43920	1	HEXACHLBUTADI

TABLE 10. EXAMPLE OF HARD-COPY OF GC-MS-SIM ANALYSIS

Data file: DATA:SYR2A02A.D
File type: GC / MS DATA FILE

Name Info: SYR 1
Misc Info:
Operator : JDF

Date : 8 Jan 87 10:02 am
Instrment: MS_5970
Inlet : GC

Sequence index : 1
Als bottle num : 2
Replicate num : 1

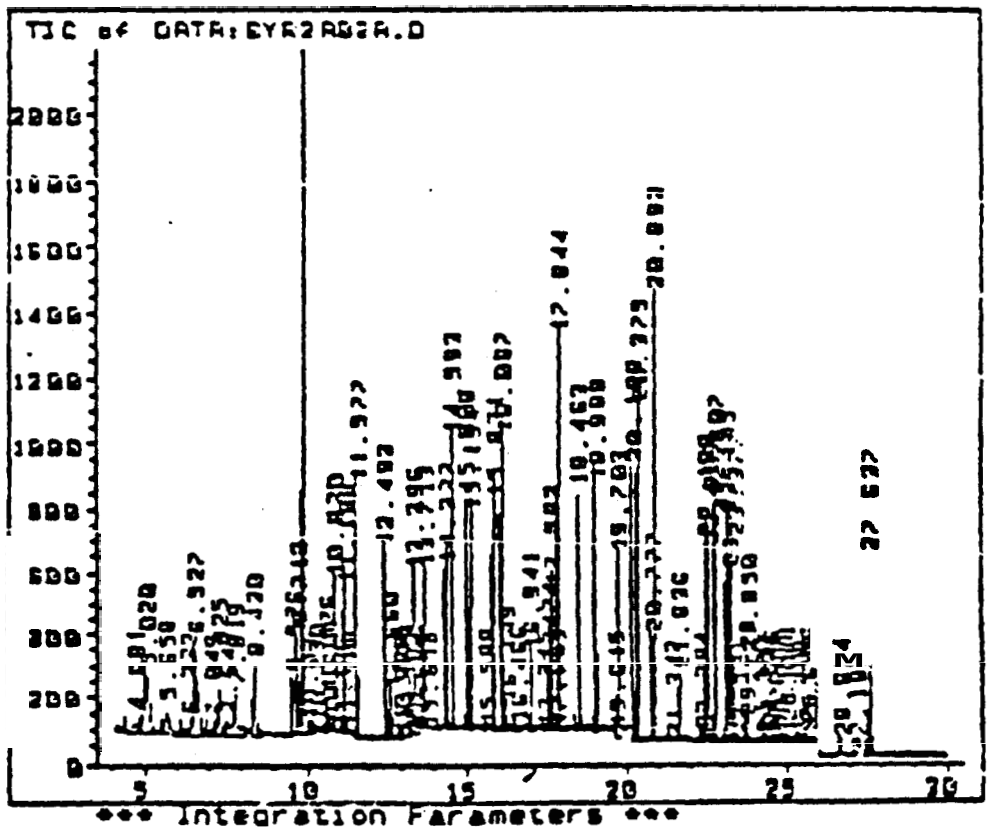

FALSE : Shoulder Detection Enabled
0.020 : Expected Peak Width (Min)
11 : Initial Peak Detection Threshold

4.000	THRESHOLD	5.000
4.000	PEAK_WIDTH	0.200
9.800	PEAK_WIDTH	0.060

TABLE 10. EXAMPLE OF HARD-COPY OF GC-MS-SIM ANALYSIS *(cont,)*

Operator: JDP 8 Jan 87 10:02 am
Sample Info : SYR 1
Misc Info:
Integration File Name : DATA:SYR2A02A.I
Sequence Index: 1 Bottle Number : 2

Last Update: 8 Jan 87 8:13 am
Reference Peak Window: 2.00 Absolute Minutes
Non-Reference Peak Window: 0.40 Absolute Minutes
Sample Amount: 0.000 Uncalibrated Peak RF: 0.000 Multiplier: 1.667

Peak Num	Peak Type	Int Type	Ret Time	Signal Description		Compound Name	Area	Amount
1		1 PP	5.020	Mass	85.00 amu	FREON 12	12895	4011 pptv
2		1 PP	5.654	Mass	50.00 amu	METHYLCHLORI	4445	2286 pptv
3		1 BP	6.225	Mass	85.00 amu	FREON 114	7067	1215 pptv
4		1 PB	6.650	Mass	62.00 amu	VINYLCHLORID	2892	1929 pptv
5		1 BP	7.816	Mass	94.00 amu	METHYLBROMID	2401	1729 pptv
6		1 BB	8.421	Mass	64.00 amu	ETHYLCHLORID	2134	2769 pptv
7		1 [illegible]	[illegible].940	Mass	101.00 amu	FREON 11	25069	6460 pptv
8		1 BP	10.669	Mass	61.00 amu	VINDENECHLOR	5034	1700 pptv
9		1 BP	11.167	Mass	49.00 amu	DICHLOROMETH	4803	2348 pptv
10		1 PP	11.225	Mass	41.00 amu	ALLYLCHLORID	761	8247 pptv
11		1 BP	11.578	Mass	151.00 amu	3CHL3FLUETHA	5477	1672 pptv
12		1 BP	12.492	Mass	63.00 amu	1,1DICHLOETH	5052	1738 pptv
13		1 VP	13.594	Mass	61.00 amu	c-1,2DICHLET	4761	1970 pptv
14		1 PM	13.713	Mass	83.00 amu	CHLOROFORM	5327	1678 pptv
15		1 BP	14.278	Mass	62.00 amu	1,2DICHLETHA	5009	2265 pptv
16		1 PB	14.594	Mass	97.00 amu	METHCHLOROFO	6656	2334 pptv
17		1 VP	15.009	Mass	78.00 amu	BENZENE	8322	2167 pptv
18		1 VP	15.154	Mass	117.00 amu	CARBONTETRAC	5888	1915 pptv
19		1 BP	15.821	Mass	63.00 amu	1,2DICHLPROP	3263	1795 pptv
20		1 BP	16.067	Mass	130.00 amu	TRICHLETHENE	4386	2109 pptv
21		1 PB	16.941	Mass	75.00 amu	c-1,3DICHLPR	2226	967.2 pptv
22		1 BP	17.475	Mass	75.00 amu	t-1,3DICHLPR	1626	689.2 pptv
23		1 BB	17.594	Mass	97.00 amu	1,1,2CHLETHA	2721	1772 pptv
24		1 PV	17.844	Mass	91.00 amu	TOLUENE	14417	2725 pptv
25		1 PB	18.463	Mass	107.00 amu	EDB	4070	1365 pptv
26		1 PM	18.989	Mass	166.00 amu	TETRACHLETHE	6674	2065 pptv
27		1 PB	19.705	Mass	112.00 amu	CHLOROBENZEN	5648	1524 pptv
28		1 BP	20.168	Mass	91.00 amu	ETHYLBENZENE	11084	1842 pptv
29		1 PB	20.372	Mass	91.00 amu	m,p-XYLENE	17989	2790 pptv
30		1 BV	20.778	Mass	104.00 amu	STYRENE	3145	1695 pptv
31		1 PM	20.887	Mass	83.00 amu	TETRACHLETHA	4531	1376 pptv
32		1 BP	20.892	Mass	91.00 amu	o-XYLENE	9798	2010 pptv
33		1 VV	22.488	Mass	105.00 amu	4-ETHYLTOLUE	7694	1481 pptv
34		1 VB	22.609	Mass	105.00 amu	1,3,5METHBEN	6781	1705 pptv
35		1 PB	23.144	Mass	105.00 amu	1,2,4METHBEN	7892	2095 pptv
36		1 BV	23.273	Mass	146.00 amu	m-DICHLBENZE	3046	1119 pptv
37		1 VV	23.279	Mass	91.00 amu	BENZYLCHLORI	3880	1006 pptv
38		1 VB	23.378	Mass	146.00 amu	p-DICHLBENZE	6090	2164 pptv
39		1 BP	23.850	Mass	146.00 amu	o-DICHLBENZE	2896	1249 pptv
40		1 BB	26.673	Mass	180.00 amu	1,2,4CHLBENZ	562	767.1 pptv
41		1 BB	27.637	Mass	225.00 amu	HEXACHLBUTAD	6309	1789 pptv

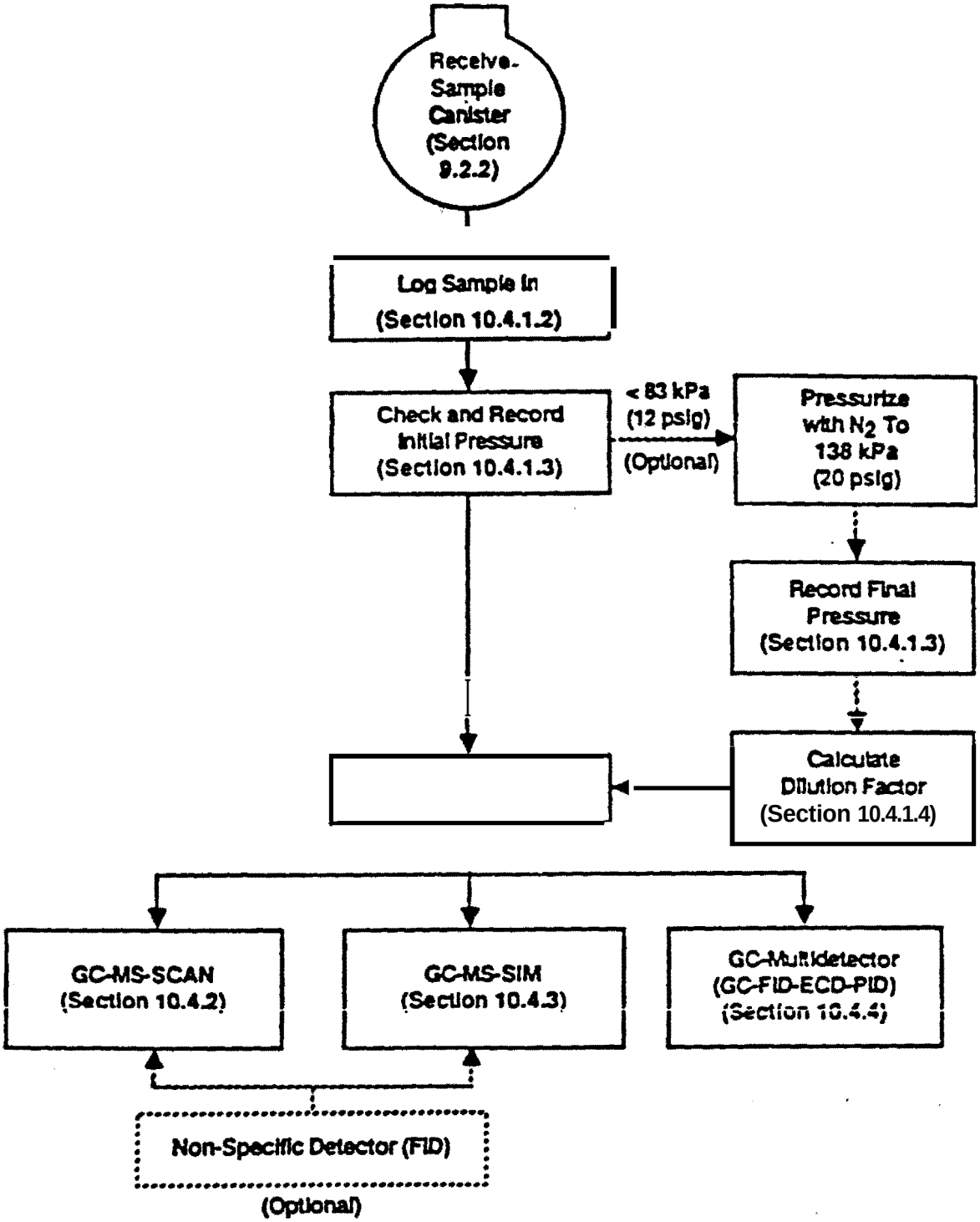

FIGURE 1. ANALYTICAL SYSTEMS AVAILABLE FOR CANISTER VOC IDENTIFICATION AND QUANTITATION

T014-75

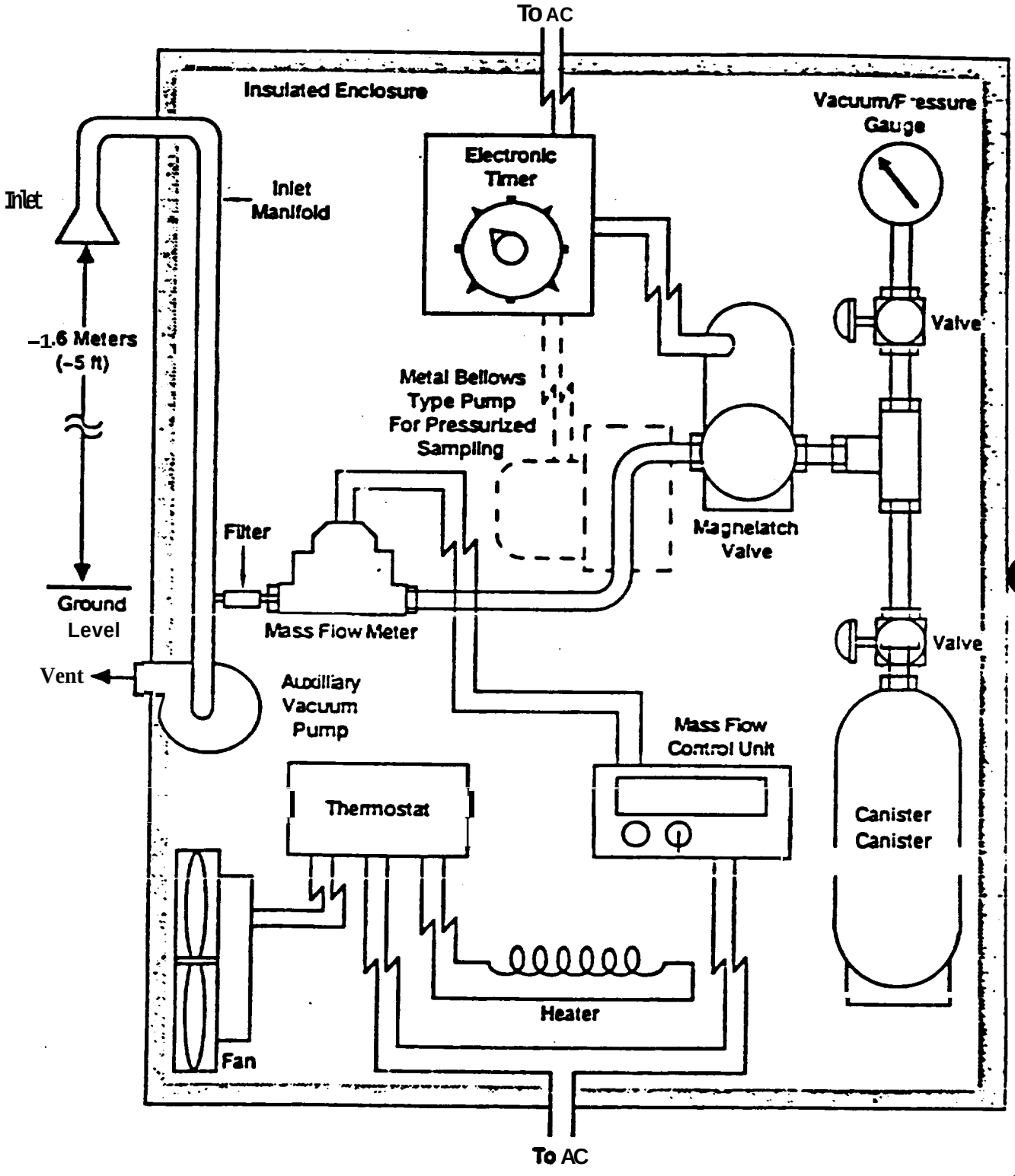

FIGURE 2 SAMPLER CONFIGURATION FOR SUBATMOSPHERIC PRESSURE OR PRESSURIZED CANISTER SAMPLING

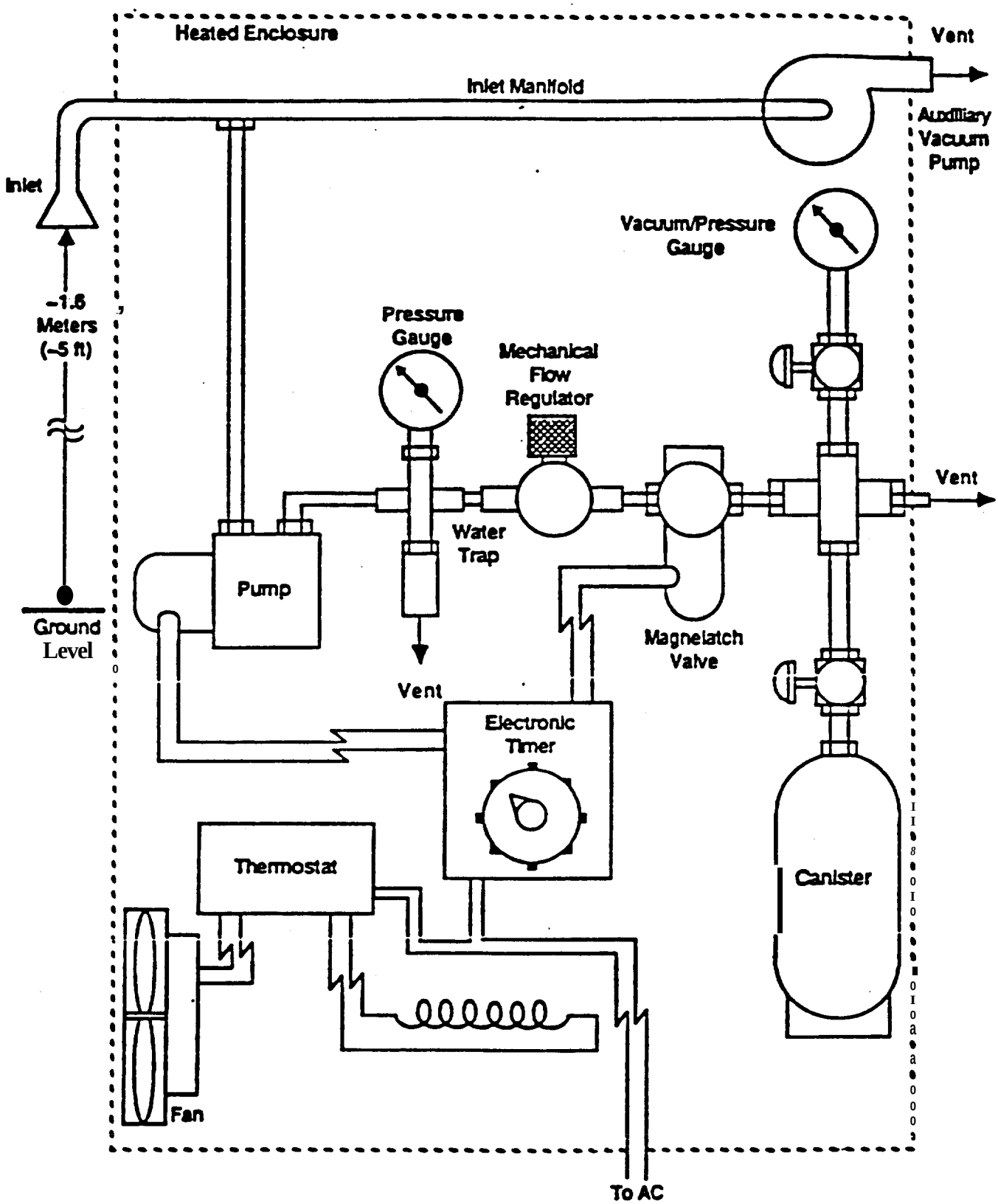

FIGURE 3. ALTERNATIVE SAMPLER CONFIGURATION FOR PRESSURIZED CANISTER SAMPLING

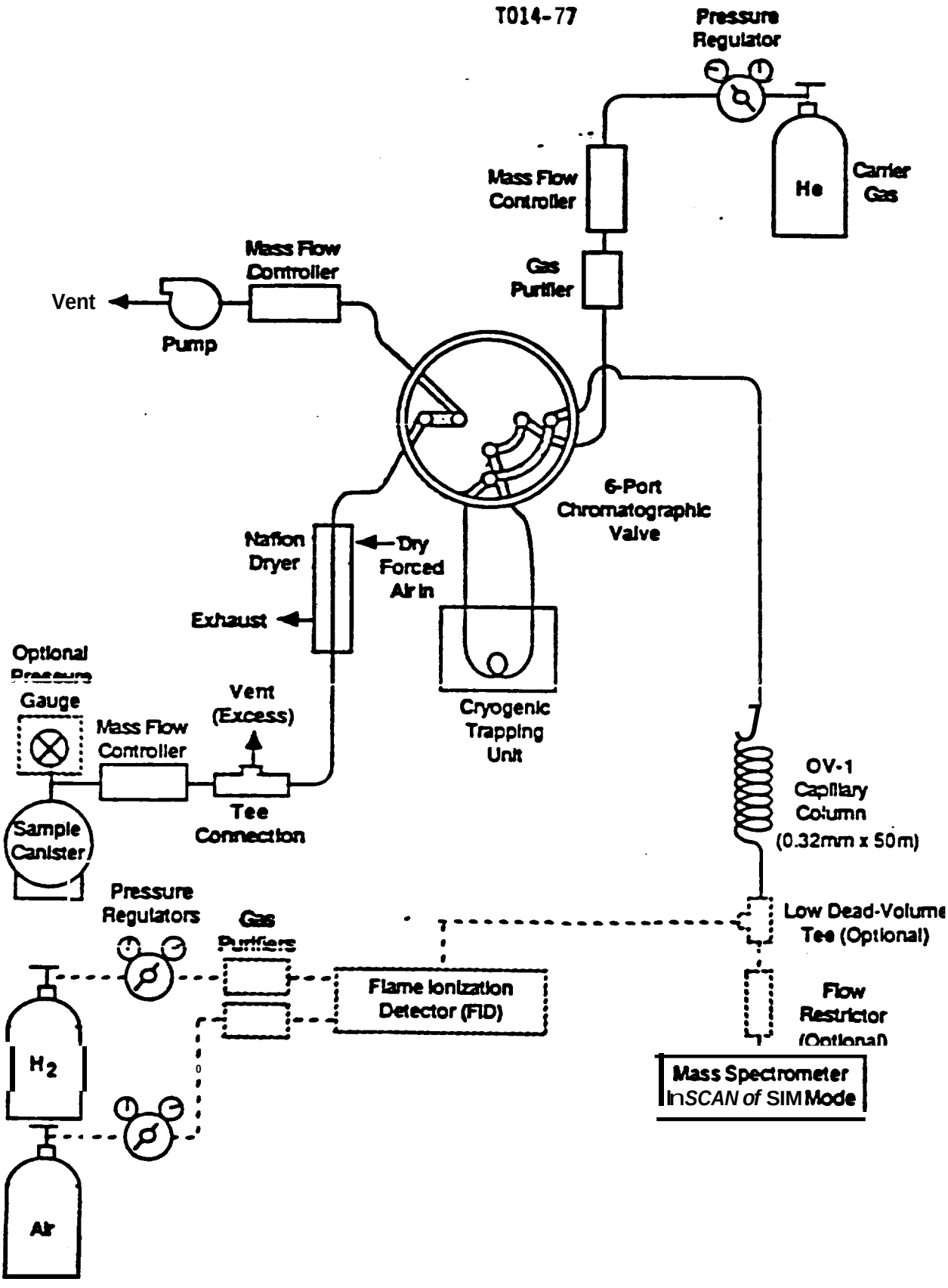

FIGURE 4. CANISTER ANALYSIS UTILIZING GC-MS-SCAN-SIM ANALYTICAL SYSTEM WITH OPTIONAL FLAME IONIZATION DETECTOR WITH THE 6-PORT CHROMATOGRAPHIC VALVE IN THE SAMPLE

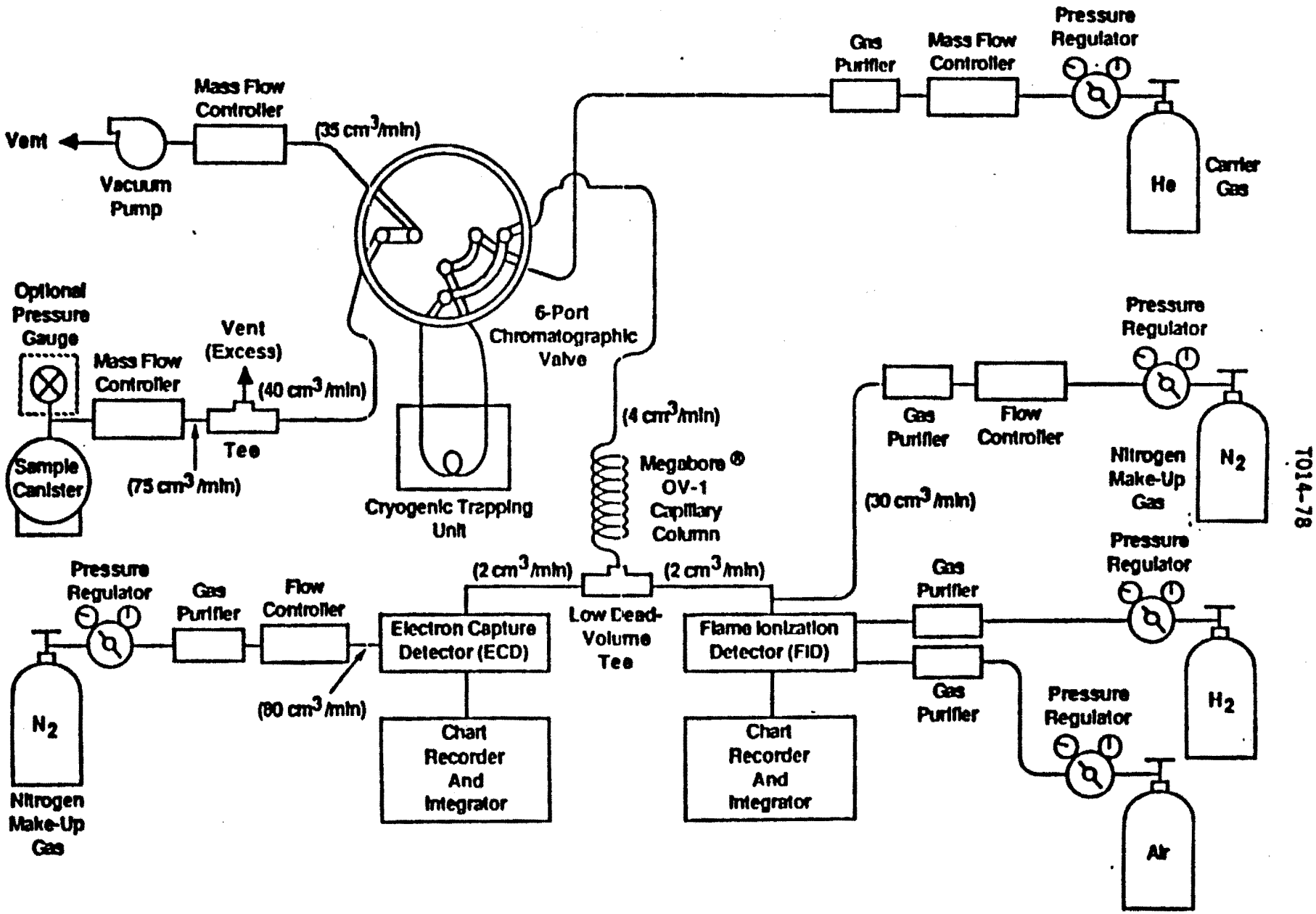

FIGURE 5. GC-FID-ECD ANALYTICAL SYSTEM WITH THE WORT CHROMATOGRAPHIC VALVE IN THE SAMPLE DESORPTION MODE

0001509

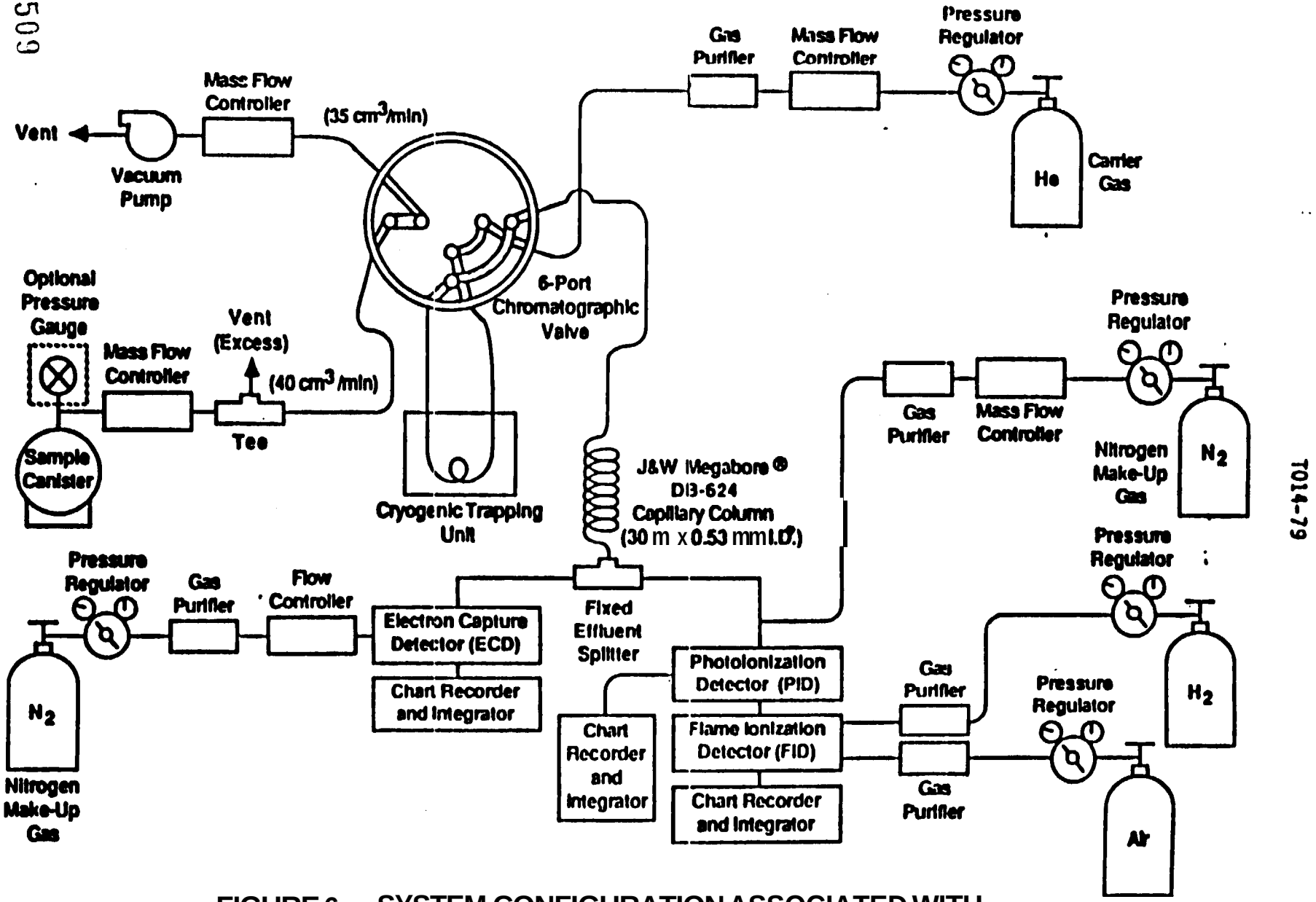

FIGURE 6. SYSTEM CONFIGURATION ASSOCIATED WITH THE GC-FID-ECD-PID ANALYTICAL SYSTEM WITH THE 6-PORT CHROMATOGRAPHIC VALVE IN THE SAMPLE DESORPTION MODE

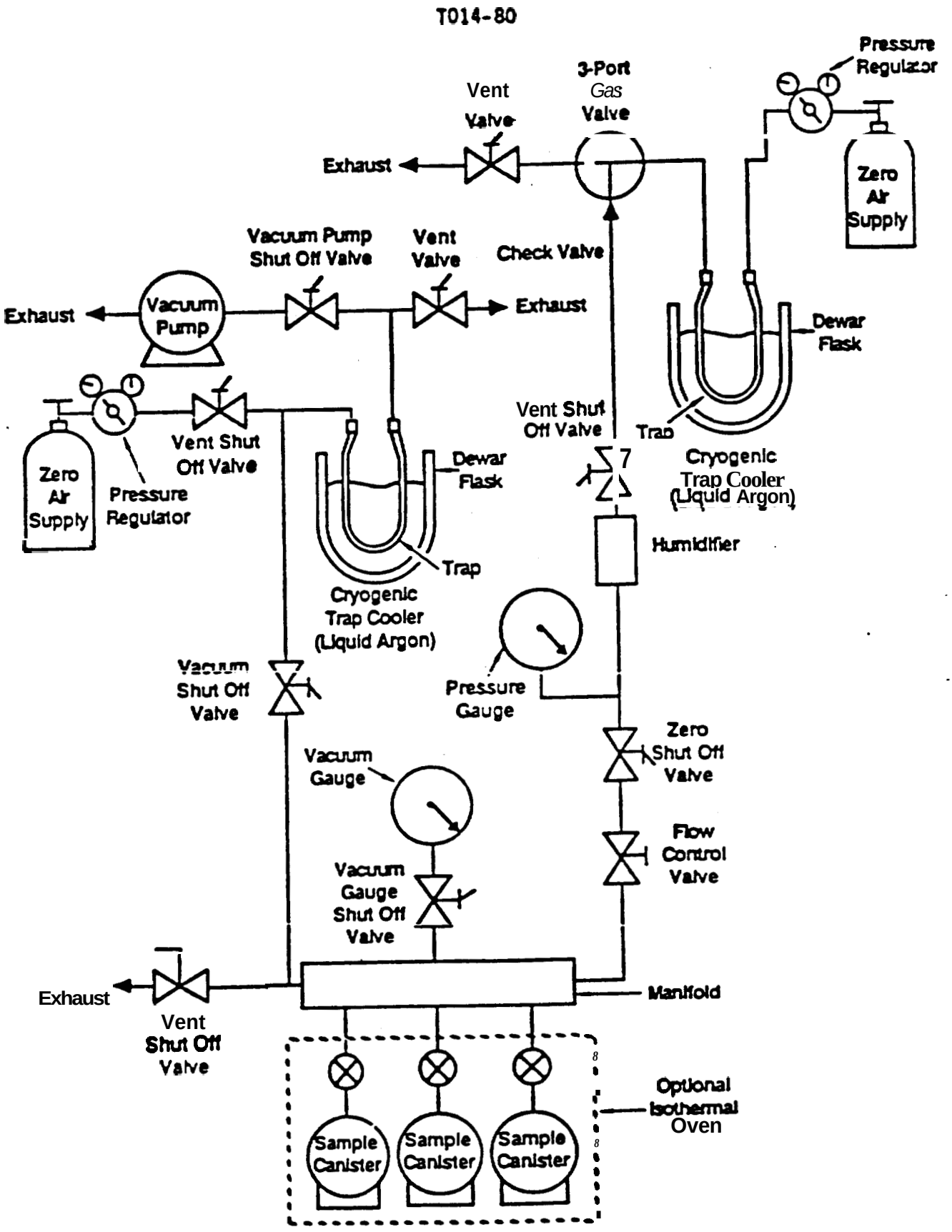

FIGURE 7. CANISTER CLEANING SYSTEM

0001510

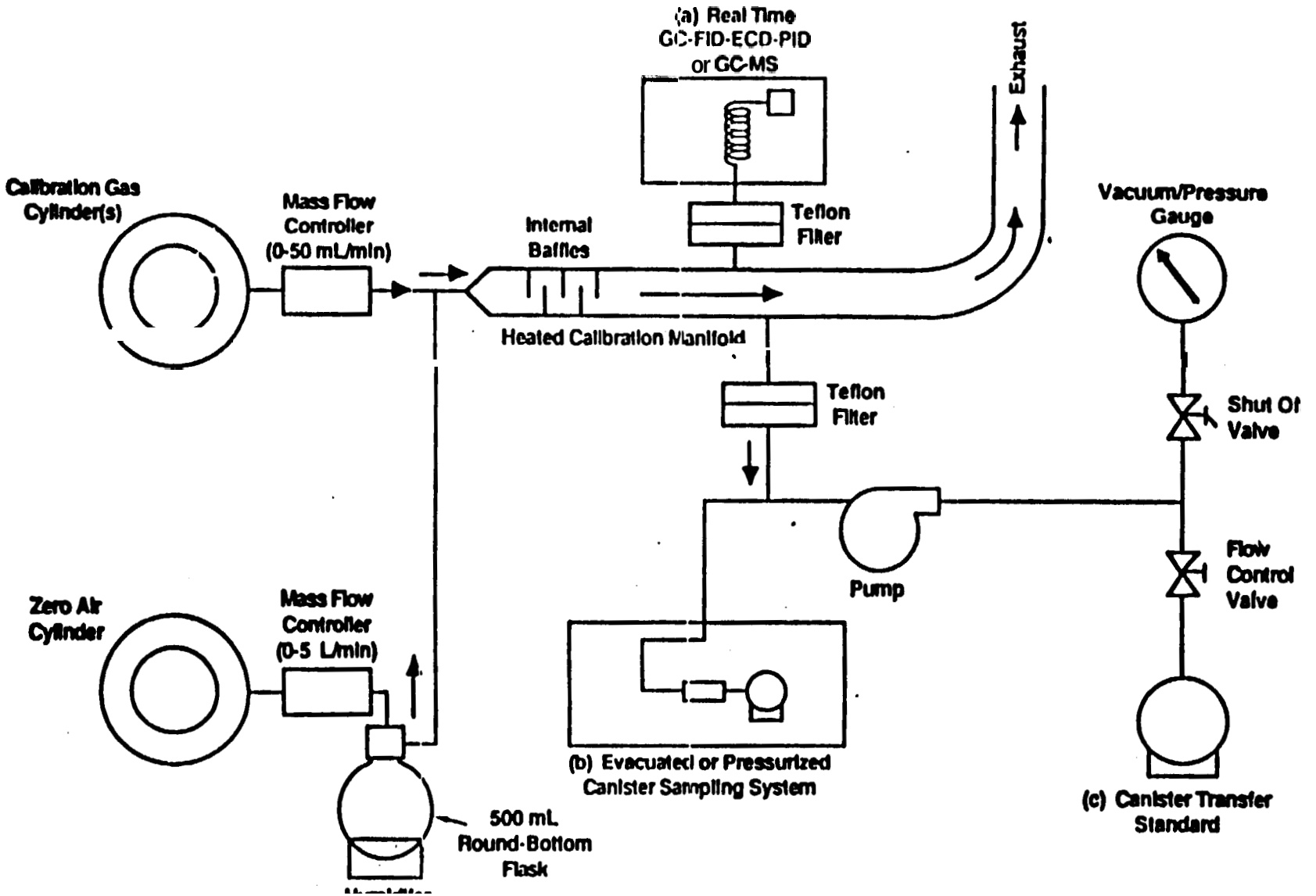

T014-81

FIGURE 8. SCHEMATIC OF CALIBRATION SYSTEM AND MANIFOLD FOR (a) ANALYTICAL SYSTEM CALIBRATION, (b) TESTING CANISTER SAMPLING SYSTEM AND (c) PREPARING CANISTER TRANSFER STANDARDS.

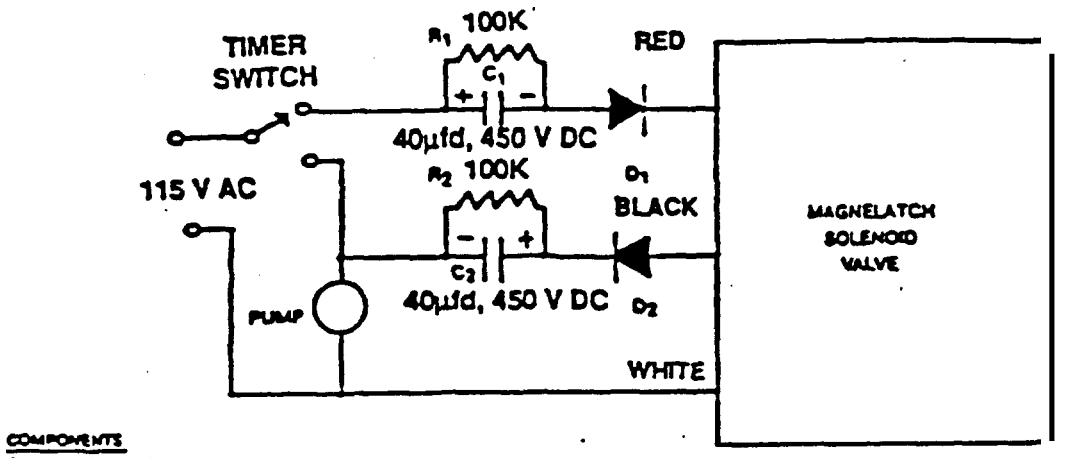

COMPONENTS
Capacitor C_1 and C_2 - 40 uf, 450 VDC (Sprague Atom® TVA 1712 or equivalent)
Resistor R_1 and R_2 - 0.5 watt, 5% tolerance
Diode D_1 and D_2 - 1000 PRV, 2.5 A (RCA, SK 3081 or equivalent)

(a). Simple Circuit For Operating Magnelatch Valve

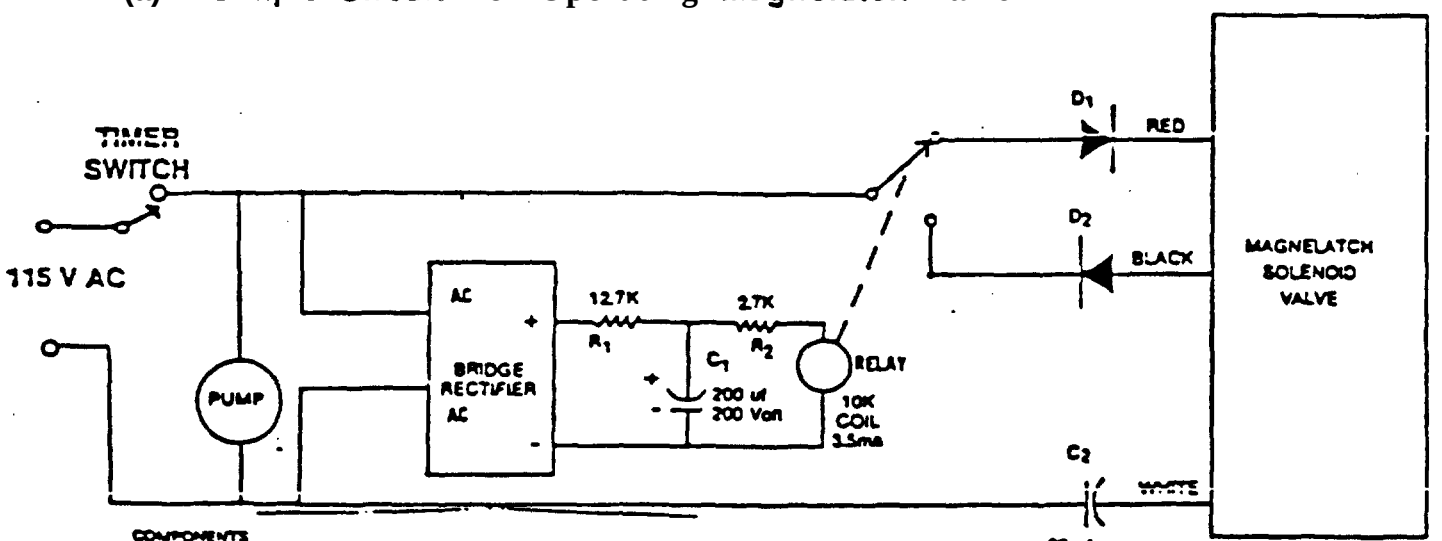

COMPONENTS
Bridge Rectifier - 200 PRV, 1.5 A (RCA, SK 3106 or equivalent)
Diode D_1 and D_2 - 1000 PRV, 2.5 A (RCA, SK 3081 or equivalent)
Capacitor C_1 - 200 uf, 250 VDC (Sprague Atom® TVA 1525 or equivalent)
Capacitor C_2 - 20 uf, 400 VDC Non-Polarized (Sprague Atom® TVAN 1652 or equivalent)
Relay - 10,000 ohm coil, 3.5 ma (AMF Potter and Brumfield, KCP 5, or equivalent)
Resistor R_1 and R_2 - 0.5 watt, 5% tolerance

(b). Improved Circuit Designed To Handle Power Interruptions

FIGURE 9. ELECTRICAL PULSE CIRCUITS FOR DRIVING SKINNER MAGNELATCH SOLENOID VALVE WITH A MECHANICAL TIMER

CANISTER SAMPLING FIELD DATA SHEET

A GENERAL INFORMATION

SITE LOCATION: _____
SITE ADDRESS: _____
_____
_____
SAMPLING DATE: _____

SHIPPING DATE: _____
CANISTER SERIAL NO: _____
SAMPLER I D _____
OPERATOR: _____
CANISTER LEAK
CHECK DATE: _____

B. SAMPUNG INFORMATION

	TEMPERATURE				PRESSURE	
	INTERIOR	AMBIENT	MAXIMUM	MINIMUM	CANISTER PRESSURE	
START			X	X		
STOP					X	

	LOCAL TIME	ELAPSED TIME METER READING	MANIFOLD FLOW RATE	CANISTER FLOW RATE	FLOW CONTROLLER READOUT
START					
STOP					

SAMPLING SYSTEM CERTIFICATION DATE: _____
OUARTEMY RECERTIFICATION DATE: _____

C LABORATORY INFORMATION

DATE RECEIVED: _____
RECEIVED BY: _____
INITIAL PRESSURE: _____
FINAL PRESSURE: _____
DILUTION FACTOR: _____
ANALYSIS
GC-FID-ECD DATE _____
GC-MSD-SCAN DATE: _____
GC-MSD-SIM DATE: _____
RESULTS': _____
_____
GC-FID-ECD: _____
GC-MSD-SCAN: _____
GC-MSD-SIM: _____

_____
SIGNATURE/TITLE

• ATTACH DATA SHEETS

FIGURE 10. CANISTER SAMPLING FIELD DATA SHEET

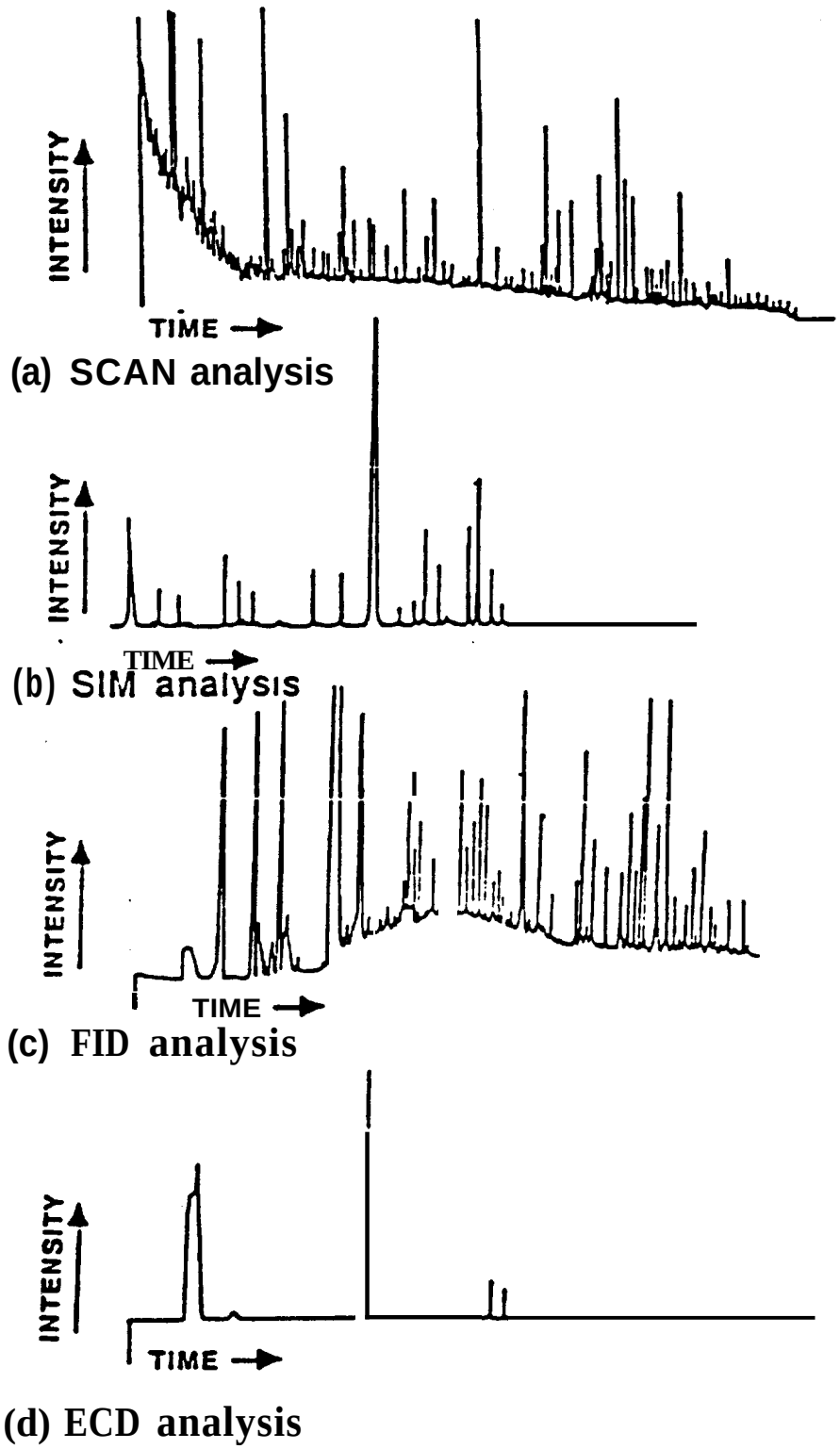

FIGURE 11. TYPICAL CHROMATOGRAMS OF A VOC SAMPLE ANALYZED BY GC-MS-SCAN-SIM MODE AND GC-MULTIDETECTOR MODE

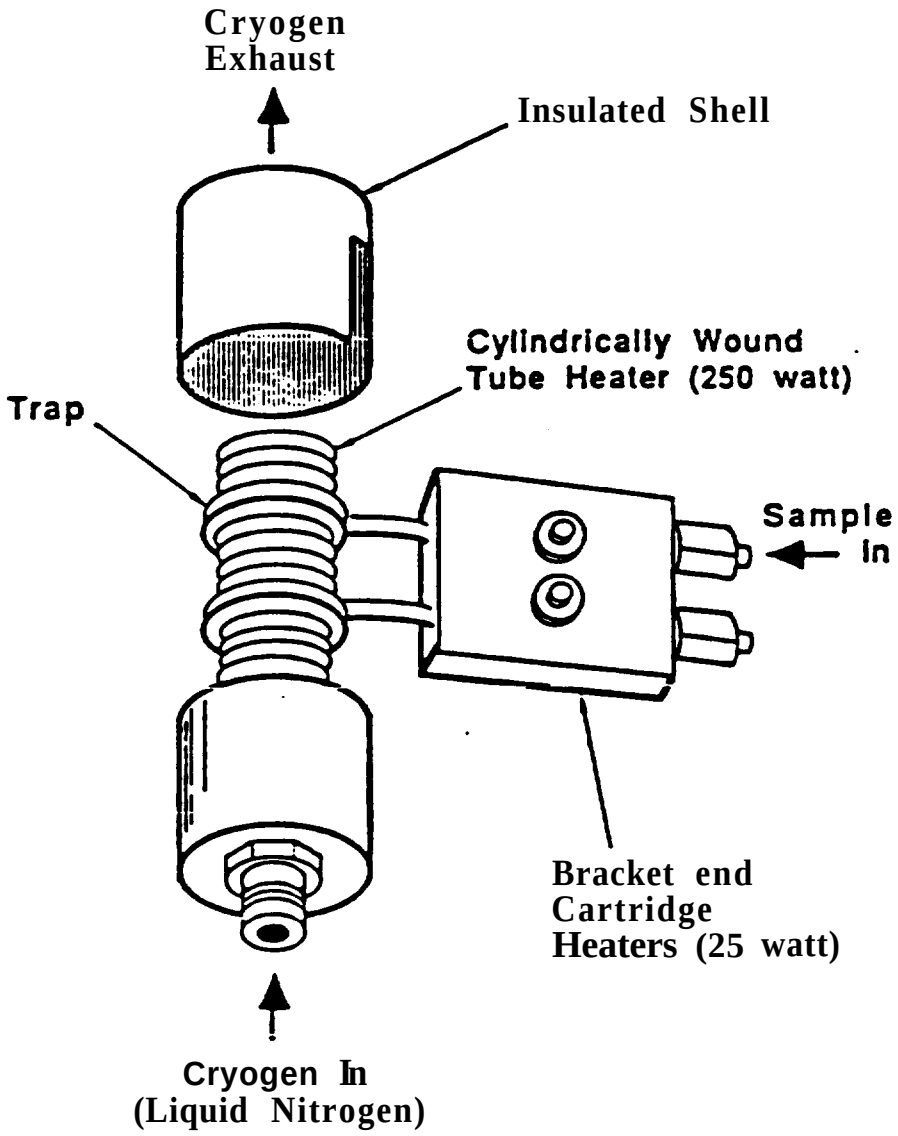

FIGURE 12. CRYOGENIC TRAPPING UNIT

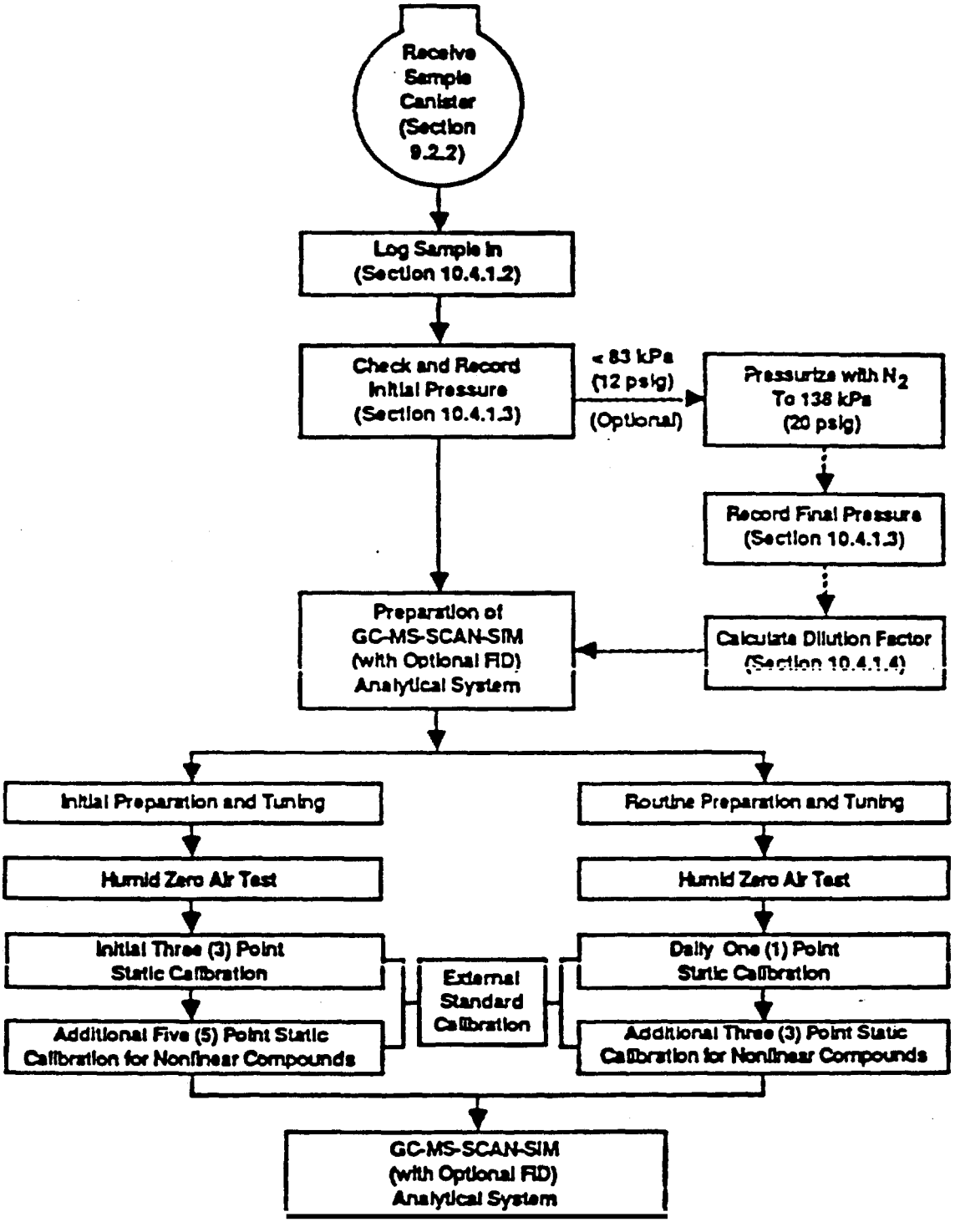

FIGURE 13. FLOWCHART OF GC-MS-SCAN-SIM ANALYTICAL SYSTEM PREPARATION (WITH OPTIONAL FID SYSTEM)

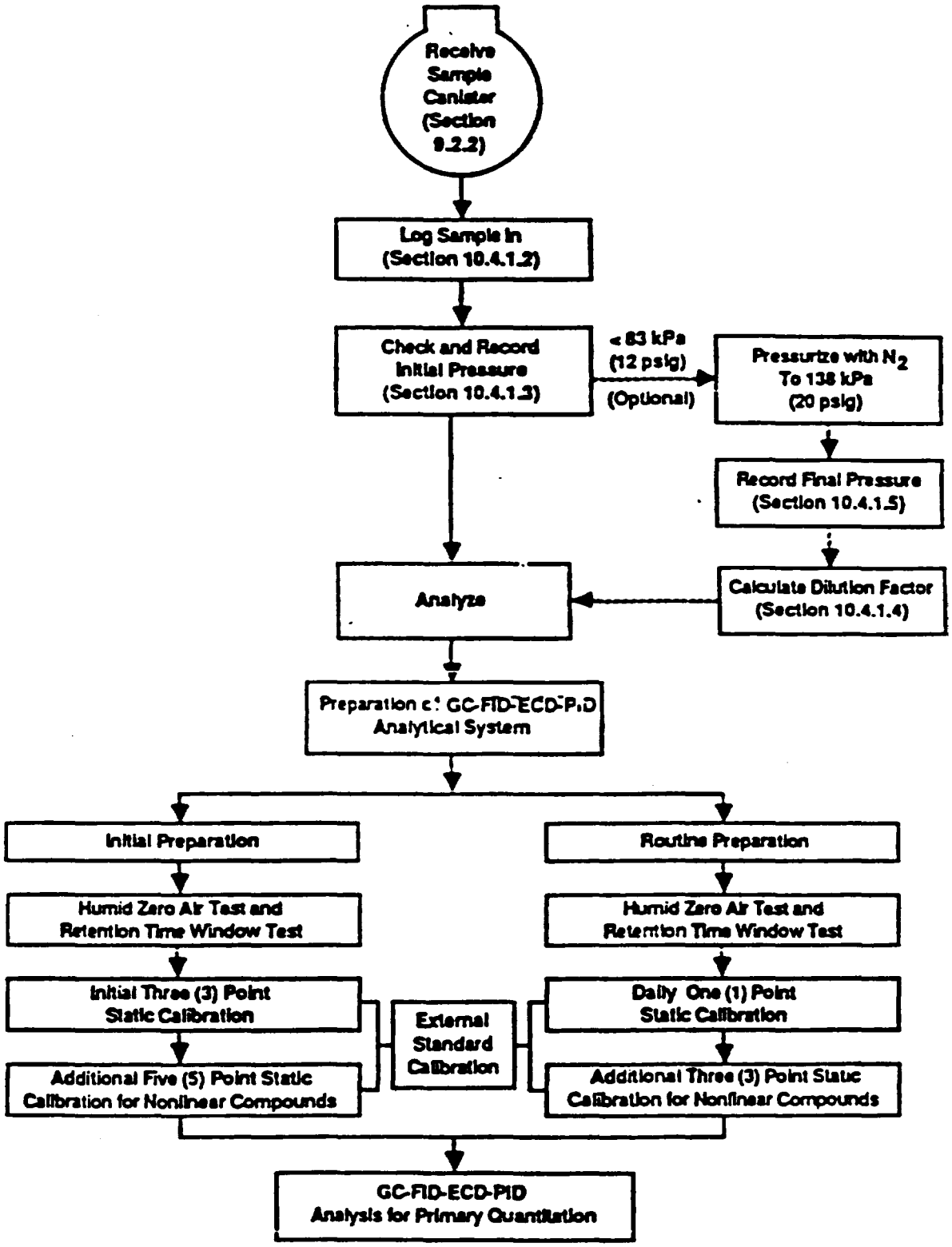

FIGURE 14. FLOWCHART OF GC-FID-ECD-PID ANALYTICAL SYSTEM PREPARATION

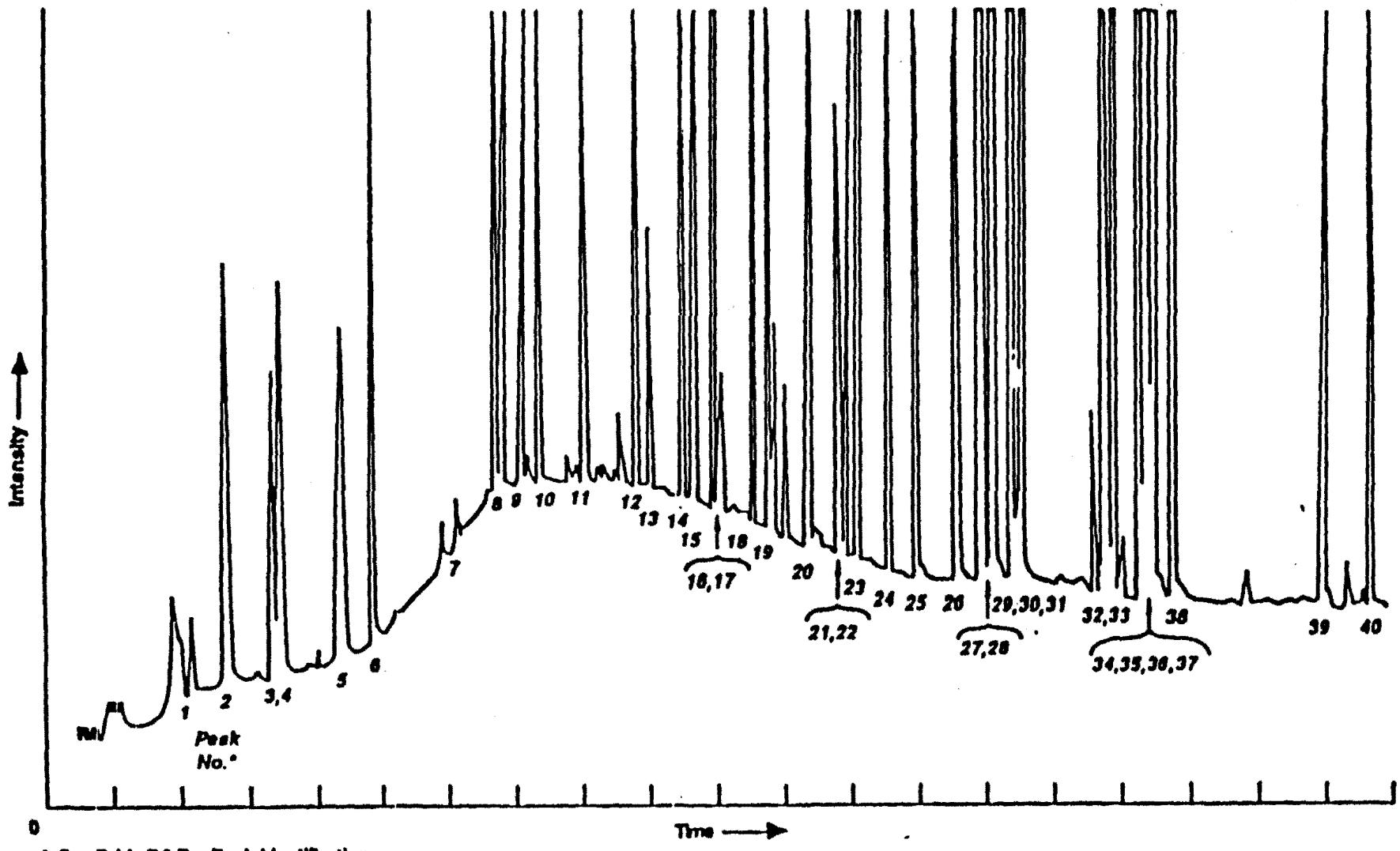

* See Table 7.0 For Peak Identification

FIGURE 15. TYPICAL FID RESPONSE TO SELECTIVE VOCs

0001514

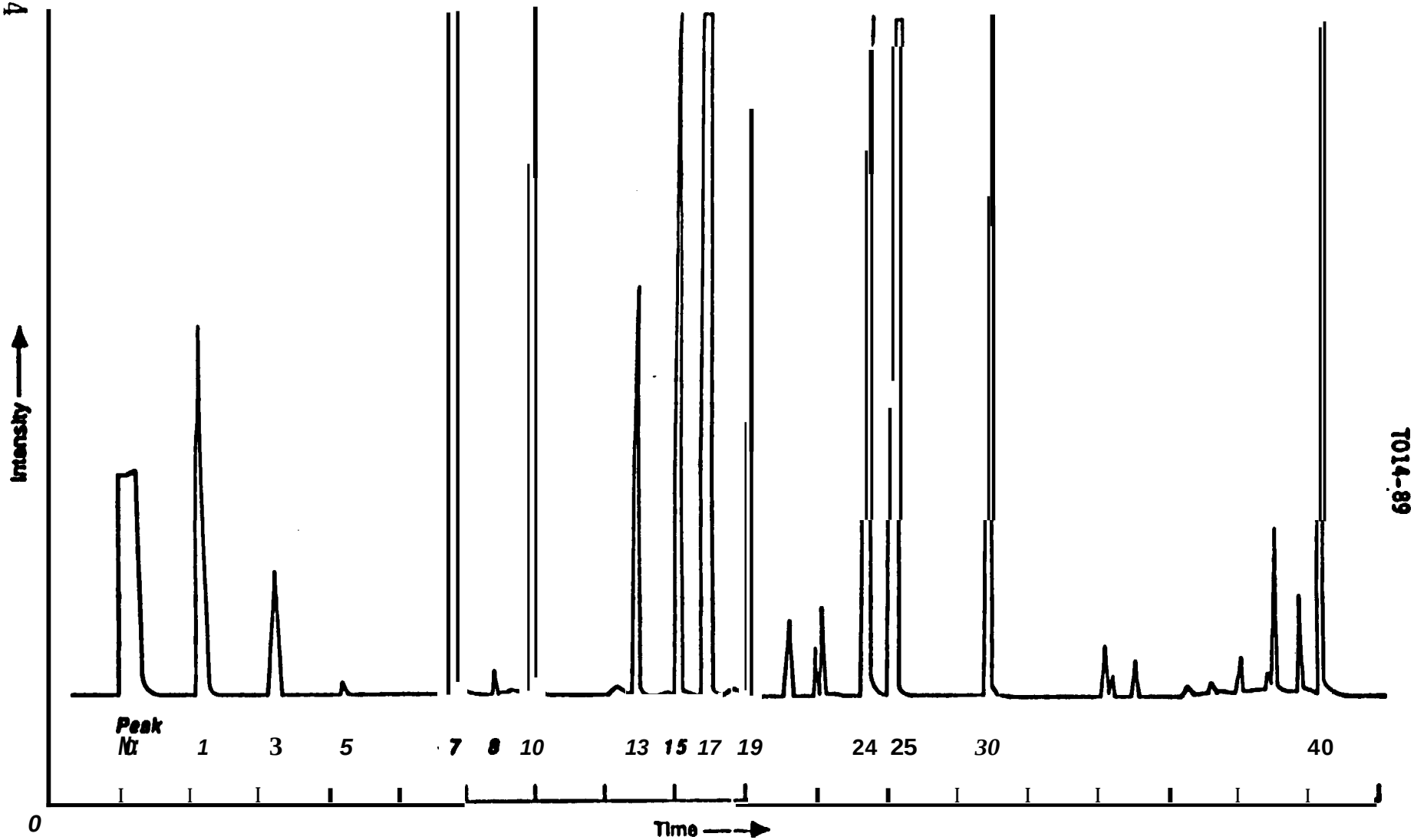

• See Table 7.0 For Perk Identification

FIGURE 16. TYPICAL ECD RESPONSE TO SELECTIVE VOCs

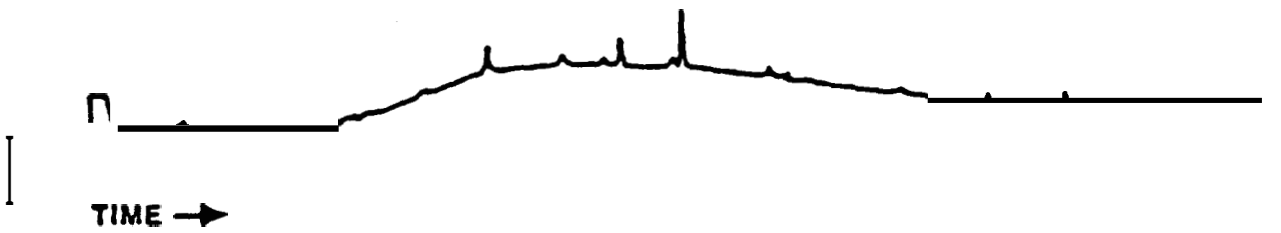

(a). Certified Sampler

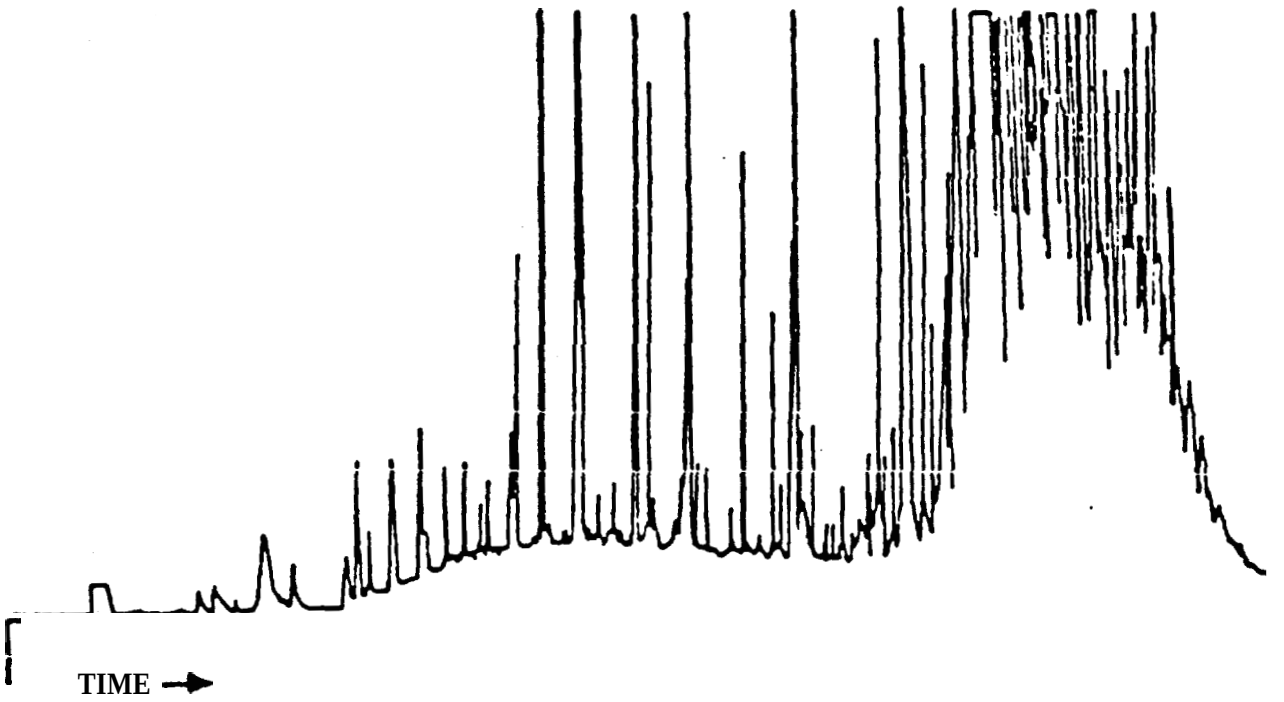

(b). Contaminated Sampler

FIGURE 17. EXAMPLE OF HUMID ZERO AIR TEST RESULTS FOR A CLEAN SAMPLER (a) AND A CONTAMINATED SAMPLER

T014-91

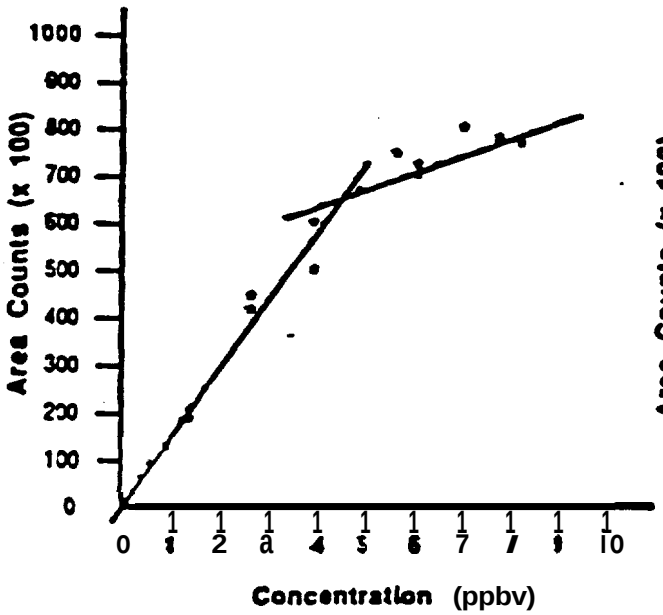

FIGURE 18(a). NONLINEAR RESPONSE OF TETRACHLORORHYLENE ON THE ECD

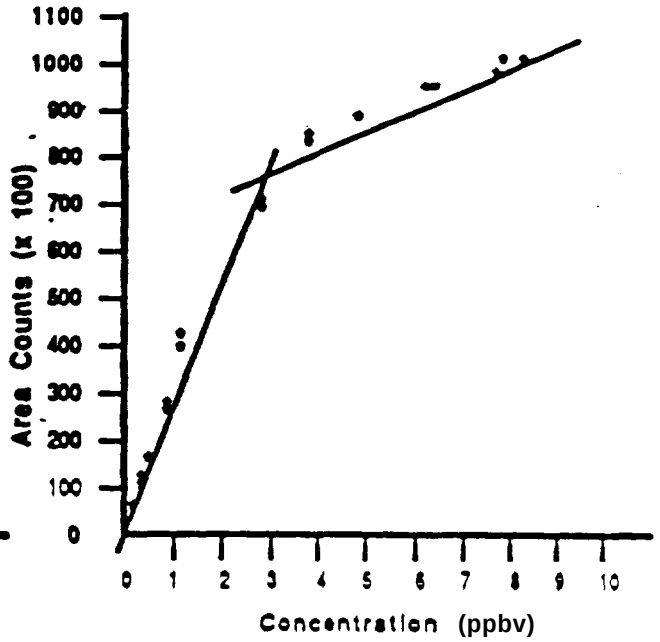

FIGURE 18(b). NONLINEAR RESPONSE OF CARBON TETRACHLORIDE ON THE ECD

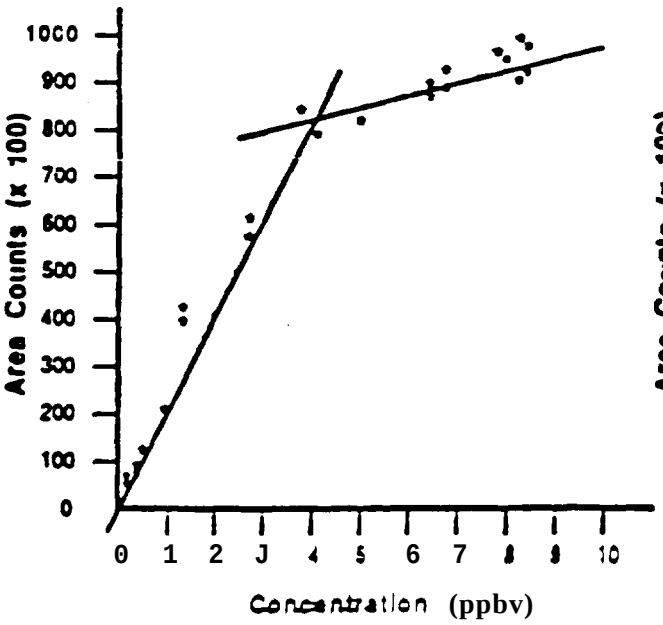

FIGURE 18(c). NONLINEAR RESPONSE OF HEXACHLOROBUTADIENE ON THE ECD

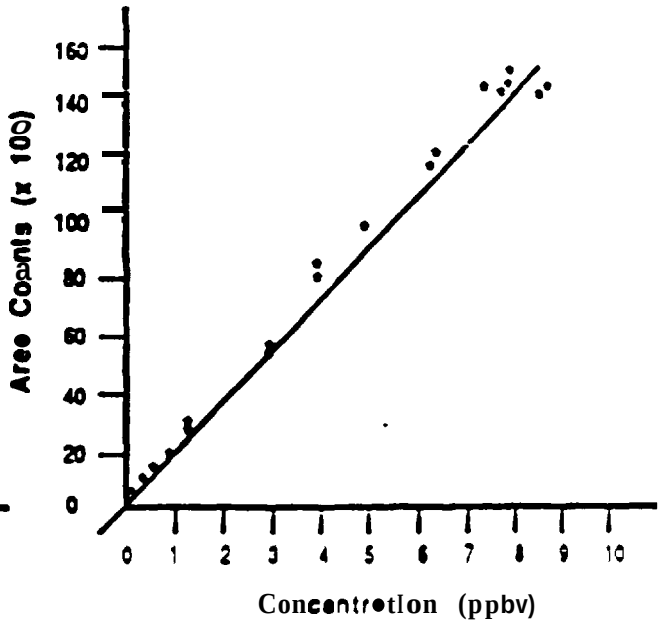

FIGURE 18(d). LINEAR RESPONSE OF CHLOROFORM ON THE ECD

FIGURE 18. RESPONSE OF ECD TO VARIOUS VOCs

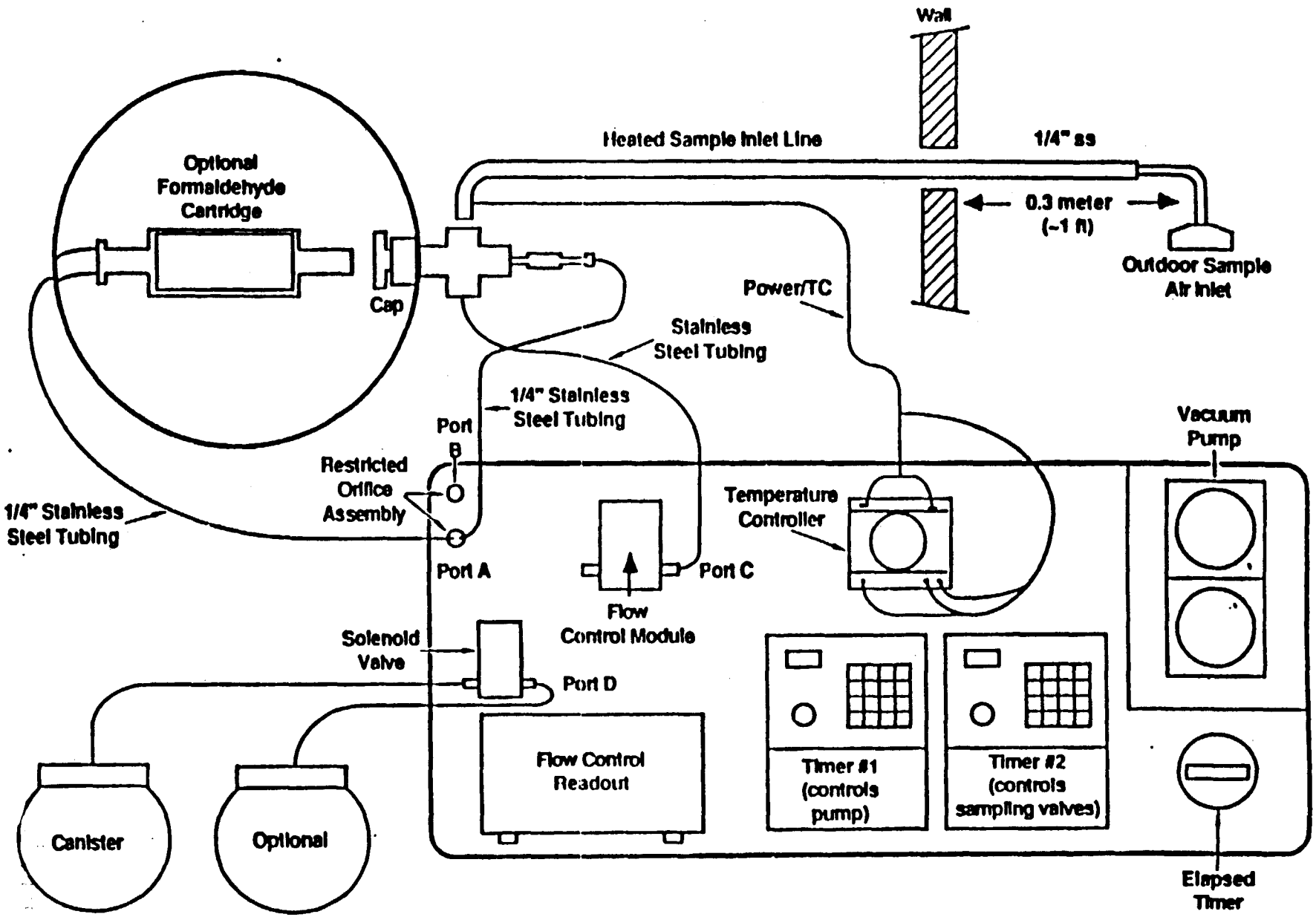

T014-92

FIGURE 19. U.S. ENVIRONMENTAL PROTECTION AGENCY UATP, SCHEMATIC OF SAMPLE INLET CONNECTIONS SAMPLER

T014-93

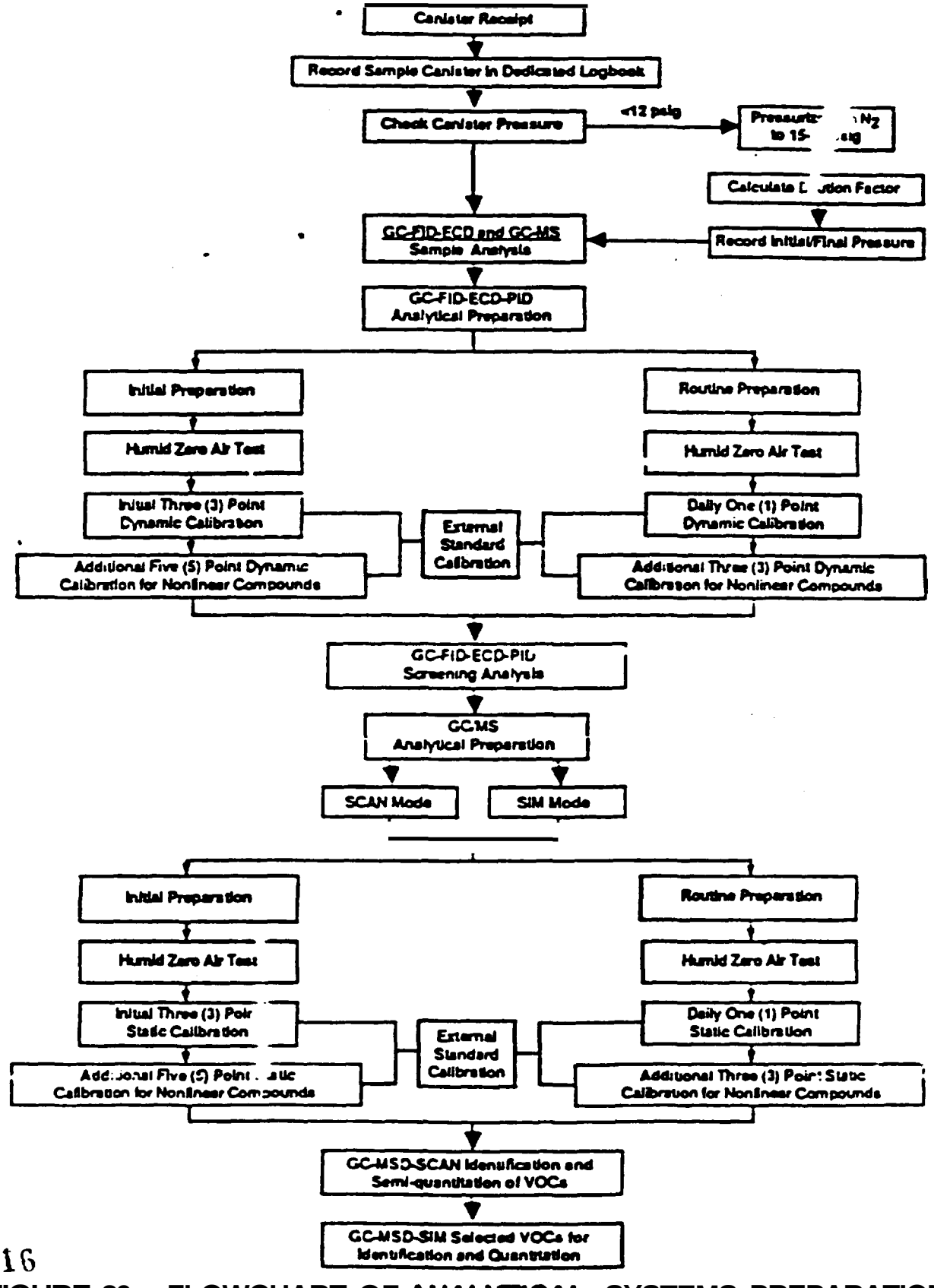

0001516

FIGURE 20. FLOWCHART OF ANALYTICAL SYSTEMS PREPARATION.

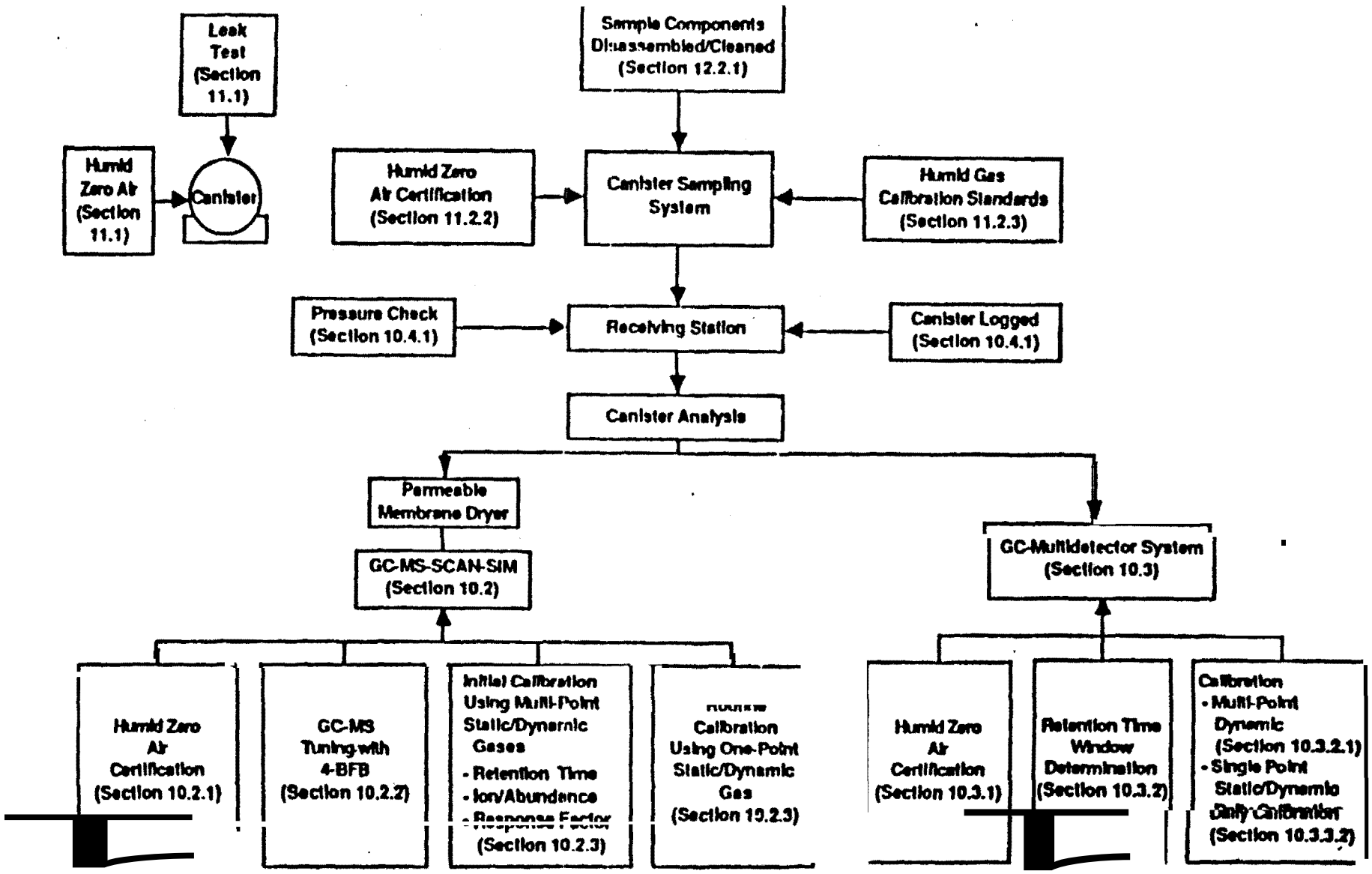

FIGURE 21. SYSTEM QUALITY ASSURANCE / QUALITY CONTROL (QA/QC) ACTIVITIES ASSOCIATED WITH VARIOUS ANALYTICAL SYSTEMS

T014-94

APPENDIX A

AVAILABILITY OF AUDIT CYLINDERS FROM UNITED STATES ENVIRONKNTAL PROTECTION AGENCY USEPA PROGRAMS/ REGIONAL OFFICES, STATE AND LOCAL AGENCIES AND THEIR CONTRACTORS

1. Availability of Audit Cylinders

1.1 The USEPA has available, at no charge, cylinder gas standards of hazardous organic canpounds at the ppb level that may be used to audit the performance of indoor air source measurement rystems.

1.2 Each audit cylinder contains 5 to 18 hazardous organic compounds in a balance of N_2 gas. Audit cylinders are available in several concentratlon ranges. The concentratlon of each organic compound in the audit cylinder is within the range illustrated in Table A-1.

2. Audit Cylinder Certification

2.1 All audit cylinders are periodically analyzed to assure tnat cylinder concentrations have remained stable.

2.2 Al1 stabilIty analyses include quality control analyses of ppb hazardous organic gas standards prepared by the Nat ona Bureau of Standards for USEPA.

3. Audit Cylinder Acquisition

3.1 USEPA program/regional officer, state/local agencies, and their contractors may obtain audit cylinders (and an audit gas delivery system, If applicable) for performance audits during:

- o RCRA Hazardous Waste Trial Burns For PHOC's; and
- o Ambient/Indoor Air Measurement of Toxic Organics.

3.2 The audit cylinders may be acquired by contacting:

Robert L. Lampe
U.S. Environmental Protection Agency
Environmental Monitoring Systems Laboratory
Quality Assurance Division
MD-77B
Research Triangle Park, NC 27711
919-541-4531

TABLE A-1. AVAILABLE USEPA PERFORMANCE AUDIT CYLINDERS

Group I Canpounds	Group II Canpounds	Croup III Compounds
Carbon tetrrchlorlde	Tr1chloroethylene	Pyrldlnc (Pyrldlne in Group III cylinders but certified analysis nut available)
Chlorofom	1,2-dichloroethrne	Vinylldene chloride
Perchloroethylenc	1,2-dibromoethane	11,2-trichloro-1,2,2-trifluoroethrne (Freon-113)
Vlnyl chloride	Acetonitrile	1,2-dichloro-1,1,2,2-tctrrf1uoroethane (Freon-114)
Benzene	Trlchlorofluoromethane (Freon-11)	Acetone
	Dichlorodifluoromethane (Freon-12)	1-4 Dioxane
	Bromomethane	Toluene
	Methyl ethyl ketone	Chlorobenzene
	1,1,1-trichloroethane	

Group I Ranges	Grouo II Ranges	Group III Ranges
7 to 90 ppb	7 to 90 ppb	7 to 90 ppb
90 to 430 ppb	90 to 430 ppb	90 to 430 ppb
430 to 10,000 ppb		

Group IV	Grouo V	
Acrylonltrile	Carbon tctrachlorlde	Methylene chlorlde
1,3-butadiene	Chloroform	frlchlorofluoromethrne (Freon-11)
Ethylene oxide	Perchloroethylene	Bromomethane
Methylene chloride	Vinyl chloride	To1uene
Propylene oxide	Benzene	Chlorobenzene
o-xylene	Trichloroethylene	1,3-Butadicnc
	1,2-dichloroethanc	o-xylene
	1,2-dibromoethane	Ethyl benzene
	1,1,1-trichloroehtane	1,2-dichloroptopane

Group IV Ranges	Grouo V Ranges
7 to 90 ppb	1 to 40 ppb
430 to 10,000 ppb	

APPENDIX B

OPERATING PROCEDURES FOR A PORTABLE GAS CHROMATOGRAPH EQUIPPED WITH A PHOTOIONIZATION DETECTOR

1. Scope

This procedure is Intended to screen ambient air environments for volatile organic compounds. Screening is accomplished by collection of VOC samples within an area and analysts onsite using a portable gas chromatograph/integrator (Photovac Models 10310, 10S50) or equivalent. This procedure is not intended to yield quantitative or definite qualitative information regarding the substances detected. Rather, It provides / chromatographic "profile" of the occurrence and intensity of unknown volatile compounds which assists in placement of fixed-site samplers.

2. Applicable Documents

2.1 ASTM Standards

E260 - Recommended Practice for General Gas Chromatography Procedures

E355 - Practice for Gas Chromatography Terms and Relationships

2.2 Other Documents

Portable Instruments User's Manual for Monitoring VOC Sources, EPA-340/1-86-015, U.S. Environmental Protection Agency, Washington, DC, June, 1986,

3. Summary of Method

3.1 An air sample Is extracted directly from ambient air and analyzed on-site by a portable GC.

32 Analysis is accomplished by drawing an accurate volume of ambient air through a sampling port and into a concentrator, then the sample air is transported by carrier gas onto a packed column and into 8 PID, resulting in response peak(s). Retention times are compared with those In a standard chromatogram to predict the probable identity of the sample components.

4. Significance

4.1 VOCs are emitted into the atmosphere fran a variety of sources including petroleum refineries, synthetic organic chemical plants,

natural gas processing plants, and automobile exhaust. Many of these VOC emissions are acutely toxic; therefore, their determination in indoor rlr is necessary to assess human health impacts.

4.2 Conventional methods for VOC determination use solid sorbent and canister sampling techniques.

4.3 Collection of indoor air samples In canisters provides (1) convenient integration of ambient samples over a specific time period, (e.g., 24 hours); (2) remote sampling and central analysis; (3) ease of storing and shipping samples, if necessary; (4) unattended sample collection; (5) analysis of samples from multiple sites with one analytical system; and (6) collection of sufficient sample volume to allow assessment of measurement precision and/or analysis of samples by several analytical systems.

4.4 The use of portable GC equipped with multidetectors has assisted air toxics programs by using the portable GC as a "screening tool' to determine "hot spots," potential interferences, and semi-quantitation of VOCs/SVOCs, prior to looting more traditional fixed-sitt samplers ,

5. Definitions

Definitions used in this document and In any user-prepared Standard Operating Procedures (SOPs) should be consistent with ASTM Methods D1356 and E355. Abbreviations and symbols pertinent to this method are defined at point of use.

6. Interferences

6.1 The most significant interferences result from extreme differences in limits of detection (LOD) among the target VOCs (Table B-1). Limitations in resolution associated with ambient temperature, chromatography and the relatively large number of chemicals result In coelution of many of the target components. Coelution of compounds with significantly different PID sensitivities will mask canpounds with more modest sensitivities. This will be most dramatic in Interferences from benzene and toluene.

6.2 A typical chromatogram and peak assignments of a standard mixture of target VOCs (under the prescribed analytical conditions of this method) are illustrated In Figure B-1. Samples which contain a highly complex mixture of components and/or interfering levels of benzene and toluene are rnalyrtd on 8 second, longer chranatogtrphlc column. The same liquid phase In the primary column is contalned in the alternate column but at a higher percent loading.

6.3 Recent designs in commercially available GCs (Table B-2) have pre-concentrator capabilities for sampling lower concentrations of VOCs, pre-column detection with back-flush capability for shorter analytical time, constant column temperature for method precision and accuracy and multidetector (PID, ECD, and FID) capability for versatility. Many of these newer features address the weaknesses and interferences mentioned above.

7. Apparatus

7.1 6at chromatograph. A GC (Photovac Inc., 739 B Parks Ave, Huntington, NY, 11743, Model 10S10 or 10S50), or equivalent used for surveying ambient air environments (which could employ a multidetector) for sensing numerous VOCs canpounds eluting from a packed column at room temperatures. This particular portable GC procedure is written employing the photoionization detector as Its major sensing device, as part of the Photovac Model 10S10 portable CC survey tool. Chromatograms are developed on a column of 3% SP-2100 on 100/120 Supelcoport (0.66 m x 32 mm 1.0.) with a flow of 30 cm^3/min air.

7.2 GC accessories. In addition to the basic gat chromatograph, several other pieces of equipment are required to execute the survey sampling. Those Include gas-tight syringes for standard injection, alternate carrier gas supplies, high pressure connections for filling the internal carrier gas reservoir, and if the Model 10S10 is used, a recording Integrator (Hewlett Packard, Avondale, PA, Model 3390A), or qulvrlent.

8. Reagents and Materials

8.1 Carrier gas, "Zero" air [<0.1 ppm total hydrocarbon (THC)] is used as the carrier gas. This gas is conveniently contained in 0.84 m3 (30 ft3) aluminum cylinders, Carrier gas of poorer quality

may result in spurious peaks In sample chromatograms. A Brooks, Type 1355-0051AAA rotameter (or equivalent) with an R-215-AAA tube and glass float is used to set column flow.

8.2 System performance mixture. A mixture of three target compounds (e.g., benzene. trichloroethylene, and styrene) In nitrogen is used for monitoring instrument performance. The approximate concentration for each of the compounds in this mixture is 10 parts per billion (ppb). This mixture is manufactured in small, disposable gas cylinders [at 275 kPa (40 psi)] from Scott Specialty Gases, or equivalent.

8.3 Reagent grade nitrogen gas. A small disposable cylinder of high purity nitrogen gas is used for blank injections.

8.4 Sampling syringes. 68%-tightsyringes, without attached shut-off valves (Hamilton Model 1002LT), or equivalent are used to Introduce accurate sample volumes into the high pressure injectors an the portable gas chromatograph. Gas syringes with shut-off valves arc not recommended because of memory problems associated with the valves, For samples suspected of containing high concentrations of volatile compounds, disposable glass syringes (e.g, Glaspak, or equivalent) rlth stainless steel/Teflon® hub needles are used.

8.5 High pressure filler. An adapter (Photovac SA101, or equivalent) for filling the internal carrier gas reservoir on the portable GC is used to deliver "zero" air.

9. Procedure

9.1 Instrument Setup

9.1.1 The portable gas chromatograph must be prepared prior to use in the ambient survey sampling. The pre-sampling activities consist of filling the internal carrier gat cylinder, charging the Internal power supply, adjusting individual column carrier gas flows, and stabilizing the photoionization detector.

9.1.2 The Internal reservoir is filled with "zero" air. The internal 12V, 6AH lead/acid battery can be recharged to provide up to eight hours of operation. A battery

which is discharged will automatically cause the power to the instrument to be shut down and will require an Overnight charge, During AC operation, the batteries will automatically be trickle-charged or in a standby mode.

9.1.3 The portable GC should be operated (using the internal battery power supply) at least forty minutes prior to collection of the first sample to Insure thrt the photoionzation detector has stabilized. Upon arriving at the area to be sampled, the unlt should be connected to AC power, if available.

9.2 Sample Collection

9.2.1 After the portable gas chromatograph is located and connected to 110V AC, the carrier gas flows must be adjusted. Flows to the 1.22 meter, SI SE-30 and 0.66 meter, 3% SP2100 columns arc adjusted with needle valves. Flows of 60 cm^3/min (5% SE-30) and 33 cm^3/min (3% SP2100) are adjusted by mans of a calibrated rotameter. Switching between the two columns is accomplished by turning the valve located beneath the electronic nodule. Outing long periods of Inactivity, the flows to both columns should be reduced to conserve pressure in the internal carrier gas supply. The baseline on the recorder/integrator is set to 20% full scale.

9.2.2 Prior to analysis of actual samples, an injection of the performance evaluation mixture must be made to verify chromatographic and detector performance. This is accomplished by withdrawing 1.0 mL samples of this mixture from the calibration cylinder and injecting It onto the 3% SP2100 column. The next sample analyzed should be a blank, consisting of reagent grade nitrogen.

9.2.3 Ambient air samples are injected onto the 3% SP2100 column. The chromatogram is developed for 15 minutes. Samples which produce particularly complex chromatograms,

especially for early eluting components, are reinjected on the 5% SE-30 column. [Note: In no instance should a syringe which has been used lor the injection of the calibrant/system performance mixture be used for the acquisition and collection of samples, or vice versa.]

9.2.4 Samples have generally been collected from the ambient air rt sites which are near suspected sources of VOCs and SVOCs and compared ulth those rhlch are not. Typically, selection of sample locations is based on the presence of chemical odon. Samples collected In areas without detectable odon have not shown significant PID responses. Therefore, sampling efforts should be Inltlrlly concentrrttd on 'suspect' environments (i.e., those which have appreciable odors). The objective of the sampling is to locate sources of the target compounds. Ultimately, samples should be collected throughout the entire locrtlon, but with particular rttentlon given to areas of high or frequent occupation.

9.3 Sample Analysis

9.3.1 Qualitative analysis. Positive identification of sample components is not the objective of this "screening" procedure. Visual comparison of retcntlon times to those in a standard chromatogram (Figure B-1) are used only to predict the probable sample component types.

9.3.2 Estimation of levels. As with qurlltrtlve analysis, estimates of canponent concentrations are extremely tentrtlve and are based on instrument responses to the calibrant species (e.g., benzene, trichloroethylene, styrene). the proposed component identification, and the difference in response between sample component and crllbrrnt. For purposes of locrtlng pollutant emission sources, roughly estimated concentrations md suspected compound types are considered sufficient.

10. Performance Criteria and Quality Assurance

Required quality assurance measurer and guidance concerning performance criteria that should be achieved within each laboratory are summarized and provided in the following section.

10.1 Standard Operating Procedures

10.1.1 SOPs should be generated by the users to describe and document the following activities in their laboratory: (1) assembly, calibration, leak check, and operation of the specific portable GC sampling system and equipment used; (2) preparation, storage, shipment, and handling of the portable GC sampler; (3) purchase, certification, and transport of standard reference materials; and (4) all aspects of data recording and processing, including lists of computer hardware and software used.

10.1.2 Specific stepwise instructions should be provided in the SOPs and should be readily available to And understood by the personnel conducting the survey work.

10.2 Quality Assurance Program

10.2.1 Reagent and materials control. The carrier gas employed with the portable GC Is "zero air" containing less than 0.1 ppm VOCs. System performance mixtures arc certified standard mixtures purchased from Scott Specialty Gases, or q u ivalent.

10.2.2 Sampling protocol and chain of custody. Sampling protocol sheets must be completed for each sample. Specifics of the sample with regard to sampling location, sample volume, analysis conditions, rnd supporting calibration and visual Inspection information are detailed by these documents. An example form Is exhibited In Table B-3.

10.2.3 Blanks, Duplicates, rnd System Performance Samples

10.2.3.1 Blanks and Duplicates. Ten percent of all injections made to the portable GC are blanks.

where the blank is reagent grade nitrogen gas. This is the second injection in each sampling location. An additional 10% of all injections made are duplicate injections. This will enhance the probability that the chromatogram of a sample reflects only the composition of that sample a d not any previous injection. Blank injections showing a significant amount of contaminants will be cause for remedial action.

10.2 .3.2 System Performance Mixture. An injection of the system performance mixture will be made rt the beginning of a visit to a particular sampling location (i.e., the first injection). The range of acceptable chromatographic system performance criteria and detector response is shown in Table B-4. These criteria are selected with regard to the intended application of this protocol and the limit/ availability of standard mixtures in this area. Corrective action should be taken with the column or PID before sample injections are made if the performance Is deemed out-of-range. Under this regimen of blanks and system performance samples, approximately eight samples can be collected and analyzed in a three hour visit to each sampling location.

10.3 Method Precision and Accuracy

The purpose of the analytical approach outlined in this method is to provide presumptive information regarding the presence of selected VOCs and SVOCs emissions. In this context, precision and accuracy are to be determined. However, quality assurance criteria are described in Section 10.2 which insure the samples collected represent the Indoor environment.

10.4 Range rnd Limits of Detection

The range and limits of detection of this method are highly compound dependent due *to* large differences in response of the portable GCs photoionization detector to the various

target compounds. Aromatic compounds and olefinic halogenated compounds will be detected at lower levels than the halomethanes or aliphatic hydrocarbons.' The concentration range of application of this method is approximately two orders of magnitude.

TABLE B-1

ESTIMATED LIMITS OF DETECTION (LOD) FOR SELECTED VOCs BASED ON 1 uL SAMPLE VOLUME

Compound	LOD (ng)	LOD (ppb)
Chloroform[a]	2	450
1,1,1-Trichloroethane[a]	2	450
Carbon tetrachloride[a]	2	450
Benzene	.006	2
1,2-Dichloroethane[b]	.05	14
Trichloroethylene[b]	.05	14
Tetrachloroethylene[b]	.05	14
1,2-Dibromoethane	.02	2
p-Xylene[c]	.02	4
m-Xylene[c]	.02	4
o-Xylene[d]	.01	3
Styrene[d]	.01	3

[a]Chloroform, 1,1,1-Trichloroethane, and Carbon tetrachloride coelute on 0.66 m 3% SP2100.
[b]1,2-Dichloroethane, Tricholroethylene, and Tetrachloroethylene coelute on 0.66 m 3% SP2100.
[c]p-Xylene and m-Xylene coelute on 0.66 m 3% SP2100.
[d]Styrene and o-Xylene coelute on 0.66 m 3% SP2100.

TABLE B-2

COMMERCIALLY AVAILABLE
PORTABLE VOC DETECTION INSTRUMENTS

Monitor	Detection principle	Range, ppm	Sensitivity	Response time, s	Accessories	Calibration Techniques	Weaknesses	Service Rate	Lack of Response	Cost, $	Samp Rate L/m
550,551 555,580 (AID, Inc.	PID, FID	0-200, 0-2000, 0-10,000	0.1 ppm at 0-200 ppm	<5		• Bag Sampling	• Umbilical cord too short • Digital readout hard to read • Flame out frequently	8 hrs		4,300	1.5
OVA 108, 128 Century Systems, Inc. (Foxboro)	FID	0-10, 0-100, 0-1000, 0-10,000, 0-100,000	0.2 ppm (Model 128) 0.5 ppm (Model 108)	2 2	• Thermal Desorbers available • Optional GC available	• Head Space • Direct Injection • Bag Samp.	• Battery failure • Sample line tinks • Compounds containing O_2/N give low response • Neg. resp. to CO/CO_2	8 hrs		6,300	
PI-101 (HNu Systems, Inc)	PID	1 1-20 1-200 1-2000	0.1 ppm Low molecular weights aromatics	<5	• Three lamps available • 9.5 (aromatics) • 10.2 (2-4 compounds) • 11.7 (halocarbons)	• External Gas Cyl. • Bag Samp.	• Three lamps - may miss something	10 hrs	• Cl hydro carbons • CH_4	4,955	0.5
TLV Sniffer (Bacharach)	Catalytic combustion	0-500 0-5000 0-50,000	2.0 ppm	5		• Bag Samp. • Head Space				900	
Ecolyzer 400 (Energetics Science)	Catalytic combustion	0-100% LFL	1% LFL	15		• Bag Samp.	• Changes in gas temp/humidity effects response				
Miran 1A (Foxboro)	IR	ppm to %	1 ppm	1,4,10 and 40						9,500	
Miran 1B (Foxboro)	IR	ppm to %								12,500	
Scanter (Santes)	GC/EC, Argon Ionization PID		0.01 ppb Cl organics	2	Preconcentrator Thermal Desorption GC Columns Auto Cal. from Integral Gas Cylinder	• Internal gas cyl. • Preconcentrator • GC Column				12,950	
Photovac - Standard Automatic Computer Auto Comp. Communication	PID (UV Light)	0	0.1 ppb Benzene with signal-to-noise ratio 4:1, Good for aromatics	2	• Dual Column • Manual/Auto Injection • Column Cond. • Pre-Flush • Auto Dial Modem • Programmable		• Column operates at ambient temp. • STD in lab then to field at diff. temp • Can't inject liquid samp. • Light fractions interfere		• H_2O • O_2	6,995 8,995 10,500 10,955 12,955	
Photovac Tip	PID	0-2000 ppm	0.05 ppm Benzene	3							

T014-B12

TABLE B-3

PORTABLE GAS CHROMATOGRAPH
SAMPLING DATA SHEET

DATE: _____ LOCATION: _____ TIME: _____

CHROMATOGRAPHIC CONDITIONS : _____

COLUMN 1: COLUMN TYPE:

I.D. (mm):_____ LENGTH (mm):_____ FLOW (mL/min):_____

COLUMN 2: COLUMN TYPE:

I.D. (mm):_____ LENGTH (mm):_____ FLOW (mL/min):_____

INJ. NO.	INJ. Va	COLUMN NO.	SETTING	LOCATION

SITE PLAN (indicate sampling locations):

DATE SIGNATURE

0001524

TABLE B-4

SYSTEM PERFORMANCE CRITERIA FOR PORTABLE GC[a]

Criteria	Test Capound	Acceptable Range	Suggested Corrective Action
PID Response	Trichloroethylene	$\geq 10^8$ uV-sec/ng	Re-tune or replace lamp
Elution Time	Styrene	2.65 ± 0.15 min	Inspect for leaks, djutt carrier flow
Resolution[b]	Benzene/Trichloro-ethylene	≥ 1.4	Replace column

[a]Based on analysis of a vapor mixture of benzene, styrene, and trichloro-ethylene.
[b]Define by: $R + = 2d/(W_1+W_2)$; where d = distance between the peaks and W = peak width at base,

TABU B-5

ESTIMATED LIMITS OF DETECTION (LOD) FOR SELECTED VOAs

Compound	LOD (ng)	LOD (ppb)
Chloroform[a]	2	450
1,1,1-Trichloroethane[a]	2	450
Carbon tctrachloride[a]	. 2	450
Benzene	.006	2
1,2-Dichloroathrne[b]	.05	14
Trichloroethylene[b]		14
Tetrachloroethylene[b]	.05	14
1,2-Dibromoethane	002	2
p-Xylene[c]	.02	4
m-Xylene[c]	.02	4
o-Xylene[d]	001	3
Styrene[d]	.01	3

[a]Chloroform, 1,1,1-Trichloroethane, *rnd* Carbon tetrachloride coelute on 0.66 m 3% SP2100.
[b]1,2-Dichloroethane, Trichloroethylene, and Tetrachloroethylene coclutc on 0.66 m 3% SP2100.
[c]p-Xylene and m-Xylene coelute on 0.66 m 3% SP2100.
[d]Styrene and o-Xylene coelute on 0.66 m 3% SP2100.

T014-B15

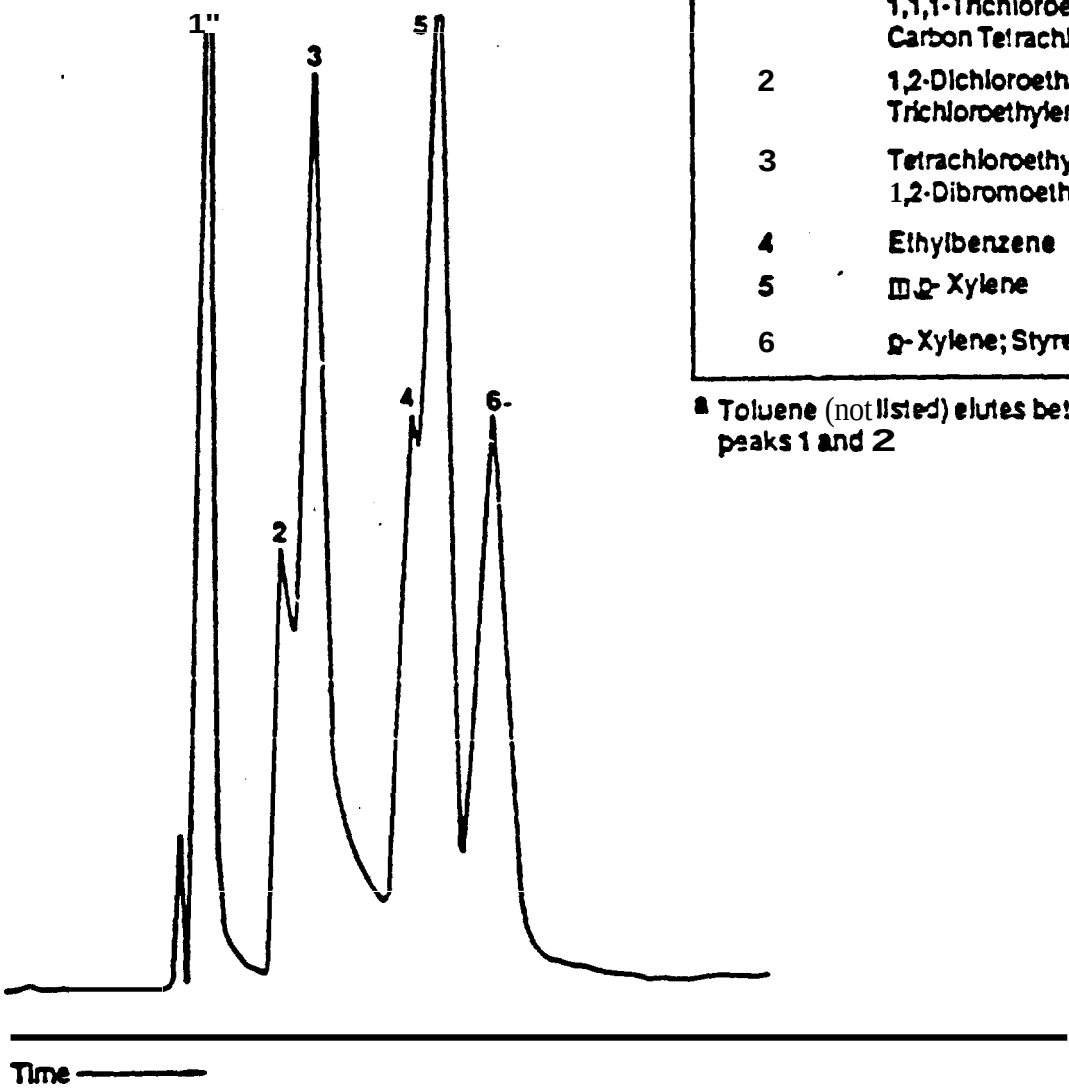

Peak Assignments For Standard Mixture

Peak No.	Compound(s)[a]
1	Benzene; Chloroform; 1,1,1-Trichloroethane; Carbon Tetrachloride
2	1,2-Dichloroethane; Trichloroethylene
3	Tetrachloroethylene; 1,2-Dibromoethane
4	Ethylbenzene
5	m,p-Xylene
6	o-Xylene; Styrene

[a] Toluene (not listed) elutes between peaks 1 and 2

FIGURE B-1. TYPICAL CHROMATOGRAM OF VOCs DETERMINED BY A PORTABLE GC

APPENDIX C

INSTALLATION AND OPERATION PROCEDURES FOR U.S. ENVIRONMENTAL PROTECTION AGENCY'S URBAN AIR TOXIC POLLUTANT PROGRAM SAMPLER

1. Scope

1.1 The subatmospheric sampling system described In this method has been modified and redesigned specifically for use in USEPA's Urban Air Toxic Pollutant Program (UATP), a joint project of USEPA's Office of Air Quality Planning and Standards, the Environmental Monitoring Systems Laboratory, and the participating state air pollution control agencies. The purpose of UATP is to provide analytical support to the states In their assessment of potential health risks from certain toxic organic compounds that may be present in urban atmospheres. The sampler is described In the paper, 'Automatic Sampler for Collection of 24–Hour Integrated Whole-Air Samples for Organic Analysis,' to be presented at the 1988 Annual Ueeting of APCA, Dallas, Texas, June, 1988 (Paper No. 88-150.3).

1.2 The sampler is based on the collection of whole air samples in 6-liter, SUMMA® passivated stainless steel canisters. The sampler features electronic timer for ease, accuracy and flexibility of sample period programming, an independently setablc presample warm-up and ambient air purge period, protection from loss of sample due to power Interruptions, and a self-contained configuration housed in an ail–metal portable case, as illustrated in Figure C-1.

1.3 The design of the sampler is pumpless, using an evacuated canister to draw the ambient sample air into Itself at a fixed flow rate (3-5 cm^3/min) controlled by an electronic mass flow controller. Because of the relatively low sample flow rates necessary for the Integration periods, auxiliary flushing of the sample inlet line is provided by a small, general-purpose vacuum pump (not In contact with the sample air stream). Further, experience has shown that inlet lines and surfaces sometimes build up or accumulate substantlal concentrations of organic materials under stagnant (zero flow rate) conditions. Therefore such lines and surfaces need to be purged and equilibrated to the sample air for some time prior to the beginning of the actual sample collection period. For this reason, the sampler includes dual timers, one of which is set to start the pump several hours prior to the specified start of the sample period to purge the inlet lines and

surfaces. As Illustrated in Figure C-1, sample air drawn into the canister passes through only four components: the heated inlet line, a 2-micron particulate filter, the electron flow controller, and the latching solenold valve.

2. Summary of Method

2.1 In operation, timer 1 is set to start the pump about 6 hours before the scheduled sample period. The pump draws sample air in through the sample Inlet and particulate filter to purge and equilibrate these components, at 8 flow rate limited by the capillary to approximately 100 cm^3/min. Timer 1 also energizes the heated Inlet line to allow it to come up to its controlled temperature of 65 to 70 degrees C, and turns on the flow controller to allow It to stabilize. The pump draws additional sample air through the flow controller by wry of the normally open port of the 3-way solenold valve. This flow purges the flow controller and allows It to achieve a stable controlled flow at the specified sample flow rate prior to the sample period.

2.2 At the scheduled Start of the sample period, timer 2 is set to activate both solenold valves. When activated, the 3-way solenold valve closes Its normally open port to stop the flow controller purge flow and opens its normally closed port to start flow through the aldehyde sample cartridges. Simultaneously, the latching solenold valve opens to start sample flou into the canister.

23 At the end of the sample period, timer 2 closes the latching solenold valve to stop the sample flow and seal the sample in the canister and also de-energizes the pump, flow controller, 3-way solenoid, and heated inlet line. During operation, the pump and sampler are located external to the sampler. The 2.4 meter (8 foot) heated Inlet line is installed through the outside wall, with most of its length outside and terminated externally with an inverted glass funnel to exclude precipitation. The indoor end is terminated In a stainless steel cross fitting to provide connections for the canister sample and the two optional formaldehyde cartridge samples.

3. Sampler Installation

3.1 The sampler must be operated indoors with the temperature between 20-32°C (68 to 90°F). The sampler case should be located conveniently

on a table, shelf, or other flat surface. Access to a source of 115 vac line power (500 watts min) is also required. The pump is removed fran the sampler case and located remotely from the sampler (connected with a 1/4 inch 0.0. extension tubing and a suitable electrical extension cord).

3.2 Electrical Connections (Figure C-1)

3.2.1 The sampler cover is removed. The sampler is not plugged into the 115 vac power until all other electrical connections are completed.

3.2.2 The pump is plugged Into its power connector (if not already connected) and the battery connectors arc snapped onto the battery packs on the covers of both timers.

3.2.3 The sampler power plug is Inserted Into a 115 volts ac line grounded receptacle. The sampler must be grounded for operator safety. The electrical wires are routed. and tled so they remain out of the way.

3.3 Pneumatic Connections

3.3.1 The length of 1/16 inch OD. stainless steel tubing is connected fran port A of the sampler (an the right side of the flow controller module) to the air inlet line.

3.3.2 The pump is connected to the sampler with 1/4 inch 0.0. plastic tubing. This tubfng may be up to 7 meters (20 feet) long. A short length of tubing is Installed to reduce pump noise. All tubing is conveniently routed and, if necessary, tied in place.

4. Sampler Preparation

4.1 Canister

4.1.1 The sample canister Is installed no more than 2 days before the scheduled sampling day.

4.1.2 With timer #1 ON, the flow controller is allowed to warm up for at least 15 minutes, longer If possible.

4.1.3 An evacuated canister is connected to one of the short lengths of 1/8 inch O.D. stainless steel tubing from port B (solenoid valve) of the sampler. The canister valve Is left closed. The Swrgelok fitting on the canister must not be cross-threaded. The connection Is tightened snugly with a wrench,

4.1.4 The end of the other length of stainless steel tubing from port B (solenold valve) Is connected with a Swagelok plug.

4.1.5 If duplicate canisters are to be sampled, the plug Is removed from the second 1/8 inch O.D. stainless steel tubing from port B (solenold valve) and the second canister Is connected. The canister valve is left closed.

4.1.6 The ON button of timer #2 is pressed. The flow through the flow controller should be stopped by this action.

4.1.7 The flow controller switch It turned to 'READ' and the zero flow reading It obtained. If this reading is not stable, wait until the reading is stabilized.

4.1.8 The flow controller switch is turned to 'SET' and the flow settlng is adjusted to the algebraic SUM of the most recent entry on Table C-1 and the zero reading obtained in step 4.1.7 (If the zero reading Is negative, SUBTRACT the zero reading from the Table C-1 value). Be sure to use the correct Table C-1 flow value for one or two canisters, as appropriate. [Note: If the analytical laboratory determines that the canister sample pressure is too low or too hfgh, a new flow scttlng or settings will be issued for the sampler. The new flow scttlng should be recorded in Table C-1 and used until superseded by new settings.]

4.1.9 Timer #2 is turned OFF to again start the flow through the flow controller. With the pump (timer #1) ON and the sampling valve (timer 12) OFF, the flow controller is turned to 'READ' and the flow Is verified to be the same Is the flow settlng made In step 4.1.8. If not, the flow settlng is rechecked In step 4.1.8 and the flow settlng is readjusted If necessary.

4.1.10 The OFF button of timer #1 is pressed to stop the pump.

4.1.11 The canister valve(s) are fully opened.

4.2 Timers

4.2.1 Timer #2 Is set to turn ON at the scheduled ON time for the sample period, and OFF rt the scheduled OFF time. (See the subsequent section on scttlng the timers.)

0001528

Normal ON time: 12:00 AM on the scheduled sampling day.
Normal OFF time: 11:59 PM on the scheduled sampling day.

(The OFF time is 11:59 PM instead of 12:00 AM so that the day number for the (IFF time Is the same as the day number for the ON time.) Be sure to set the correct day number.

4.2.2 Timer #1 is set to turn OM six (6) hours before the beginning of the scheduled sample period and OFF at the scheduled OFF tlme for the sample period (same OFF time as for timer #2). (See the subsequent section on setting the timers.) Normal ON tlme: 06:00 PM on the day prior to the scheduled sampling day. Normal OFF time: 11:59 PI4 on the scheduled sampling day. [Note: The timers are wired so that the pump will be on whenever either timer Is on. Thus the pump will run if timer 12 is ON even iif timer 11 is OFF.]

4.2.3 The elapsed time meter Is set to 0.

4.3 Sampler Check

4.3.1 The following must be verified before leaving the sampling site:

(1) Canister(s) is (are) connected properly and the unused connection Is capped if only one canister is used.
(2) canister valve(s) is (are) opened.
(3) Botn timers are programmed correctly for the scheduled sample period.
(4) Both timers are set to "AUTO".
(5) Both timers are initially OFF.
(6) Both timers are set to the correct current time of day and day number.
(7) Elasped time meter is set to 0.

4.4 Sampler Recovery (Post Sampling)

4.4.1 The valve on the canister is closed.

4.4.2 The canister is disconnccted from the sampler, the sample data sheet Is completed, and the canister is prepared for shipment to the analytical laboratory.

4.4.3 If two canisters were sampled, step 2.4.2 is repeated for the other canister.

5. Timer Setting

Since the timers are 7-day tlmen, the days of the week are numbered from 1 to 7. The assignment of dsy numbers to drys of the week is

indicated on the timer keypad: 1 = Sunday, 2 = Monday, 3 = Tuesday, 4 = Wednesday, 5 = Thursday, 6 = Friday, and 7 = Saturday. This programing is quite simple, but some timers may malfunction or operate erratically if not programmed exactly right. Io assure correct operation, the timers should be reset and completely reprogrammed "from scratch" for each sample. The correct current time of day is re-enteral to reprogram the tirr. Any program In the timer's memory IS erased by resetting the timer (pressing the reset button), The timr is set by the following:

(1) pressing the reset button,
(2) entering the correct dry number a d time of day,
(3) entering the ON and OFF times for the sample period, and
(4) verifying that the ON and OFF time settings are correct.

5.1 Timer Reset

The timer reset button is pressed, which is recessed in a small hole located just above the LED (light emitting diode) Indicator light. A small object thrt will fit through the hole, such as a pencil, match, or pen is used to press the timer. After reset, the timer display should show |1| |10:00|. [Note: The timers may operate erratically when the batteries are discharged, which happens when the sampler is unplugged or without power for several hours. When the sampler is again powered up, several hours may be required to recharge the batteries, To avoid discharging the batteries, the battery pack should be disconnected from the timer when the sampler is unplugged.]

5.2 Date and Time Entry

The selector switch is turned to SET and the number button corresponding to the day number is pressed. (For example, a "2" is pressed for Monday.) The current time of day is entered. (For example, if the time is 9:00 AM, 900 is pressed.) AM or PM 1s pressed as applicable. (DIsplry should show |2| |'9:00| for 9:00 AM Monday.) [Note: ' indicates AM and indicates PM.] The CLOCK button is pressed. (DIsplay should show |-| |--:--|) If an error is made, |E| |EE:EE| Is shown on the display. The CLEAR button is pressed and the above steps are repeated. The selector switch is turned to AUTO or MAN to verify correct time setting.

5.3 ON and OFF Entry

The selector switch 1s turned to SET. The ON and OFF program is entered in the following order: day, number, time, AM or PM, ON or OFF, (Example: To turn ON at 12:00 AM on day 5 (Thursday); 5, 1200, AM, ON is entered). (Example: To turn OFF at 11:59 PH on day 5 (Thursday), 5, 11:59, PM, OFF Is entered.) If the display Indicates an error (|E| |EE:EE|), the timer Is reset. The selector switch Is turned to AUTO.

5.4 ON rnd OFF Verification

5.4.1 The selector switch is turned to REYIEY. The number of the scheduled sample day is pressed. ON 1s pressed. The , display should show the time of the beginning of the sample period (for example, |5| |'12:00|). [' indicates AM.] ON is pressed again. The display should show |5| |--:--|, indicating no other ON times are programmed.

5.4.2 OFF is pressed. The display should show the time of the end of the sample period, (for example, |5| |, 11:59|). PH is Indicated by the ":" mark before the time. OFF Is pressed again. The display should show |5| |--:--|, indicating no other OFF times are programmed. ?he selector Is switched to AUTO. If anything is Incorrect, the timer is reset and reprogrammed.

TABLE C-1

NET FLOY CONTROLLER SETTING

DATE	1 CANISTER	2 CANISTERS

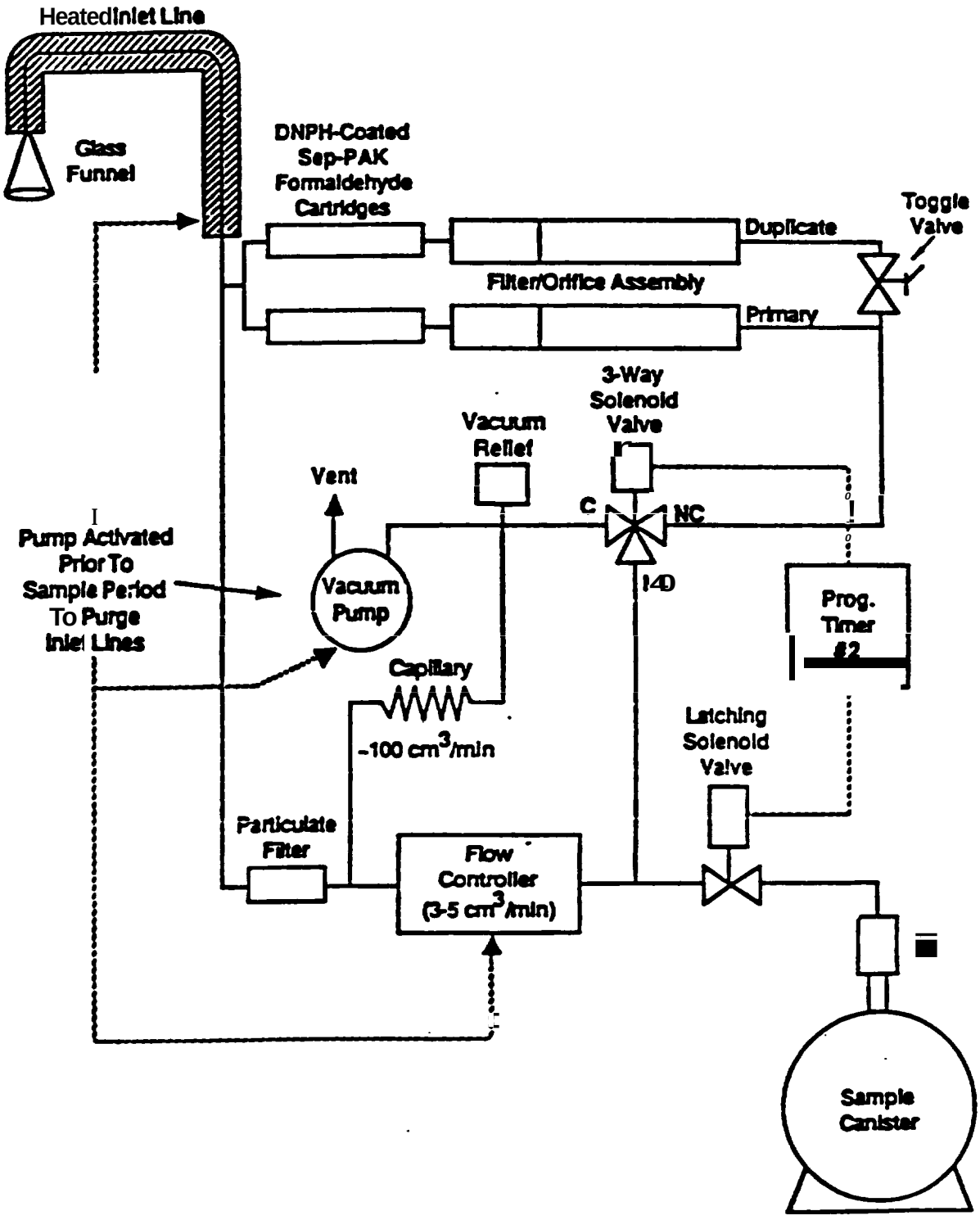

FIGURE C-1. U.S. ENVIRONMENTAL PROTECTION AGENCY UATP SAMPLER SCHEMATIC OF SAMPLE INLET CONNECTIONS

APPENDIX L

GENERAL AIR SAMPLING LOCATION GUIDELINES

(SOURCE: E & B 1988)

[Bold items enclosed in brackets denote changes from original text]

POTENTIAL AIR SAMPLING STUDY DESIGNS

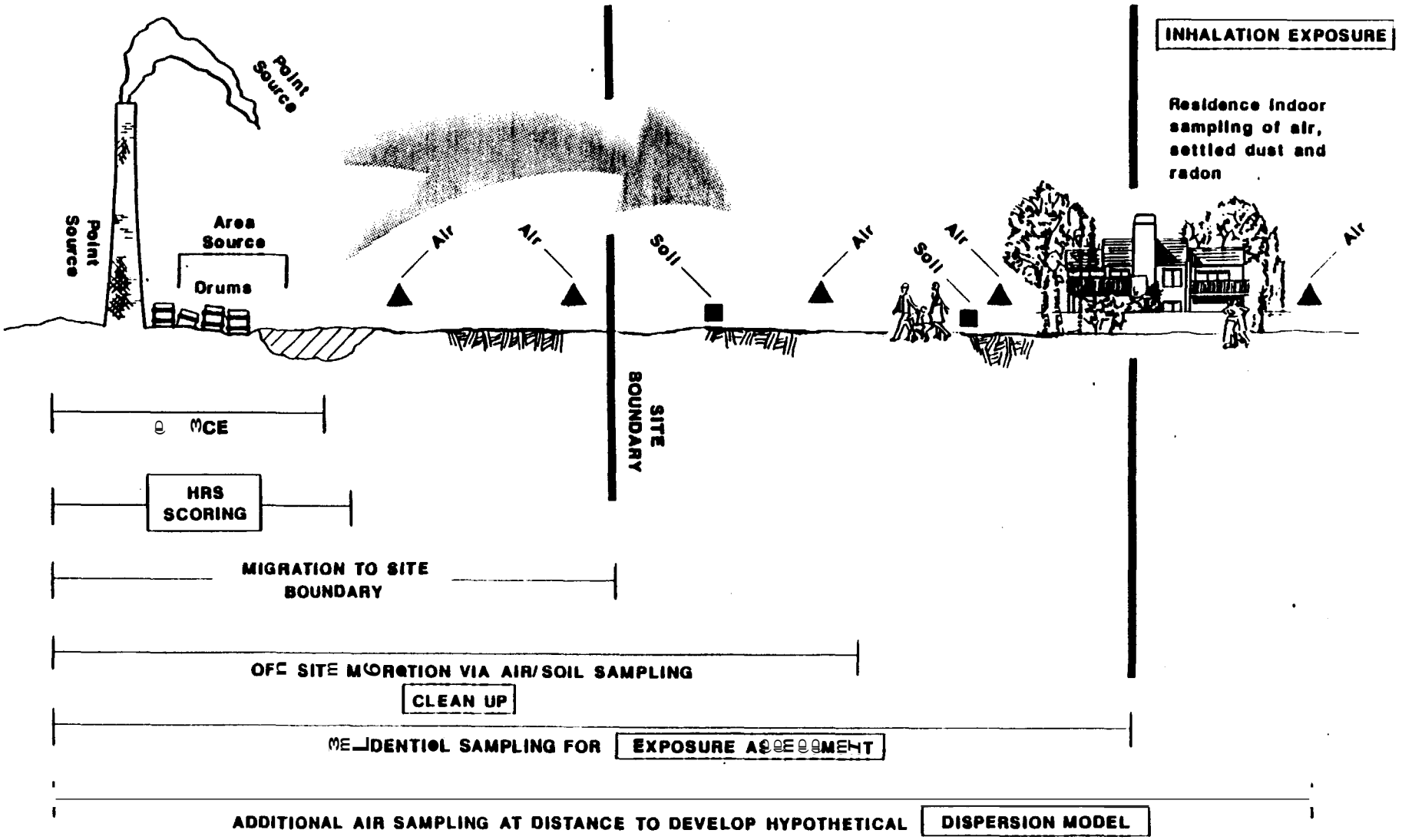

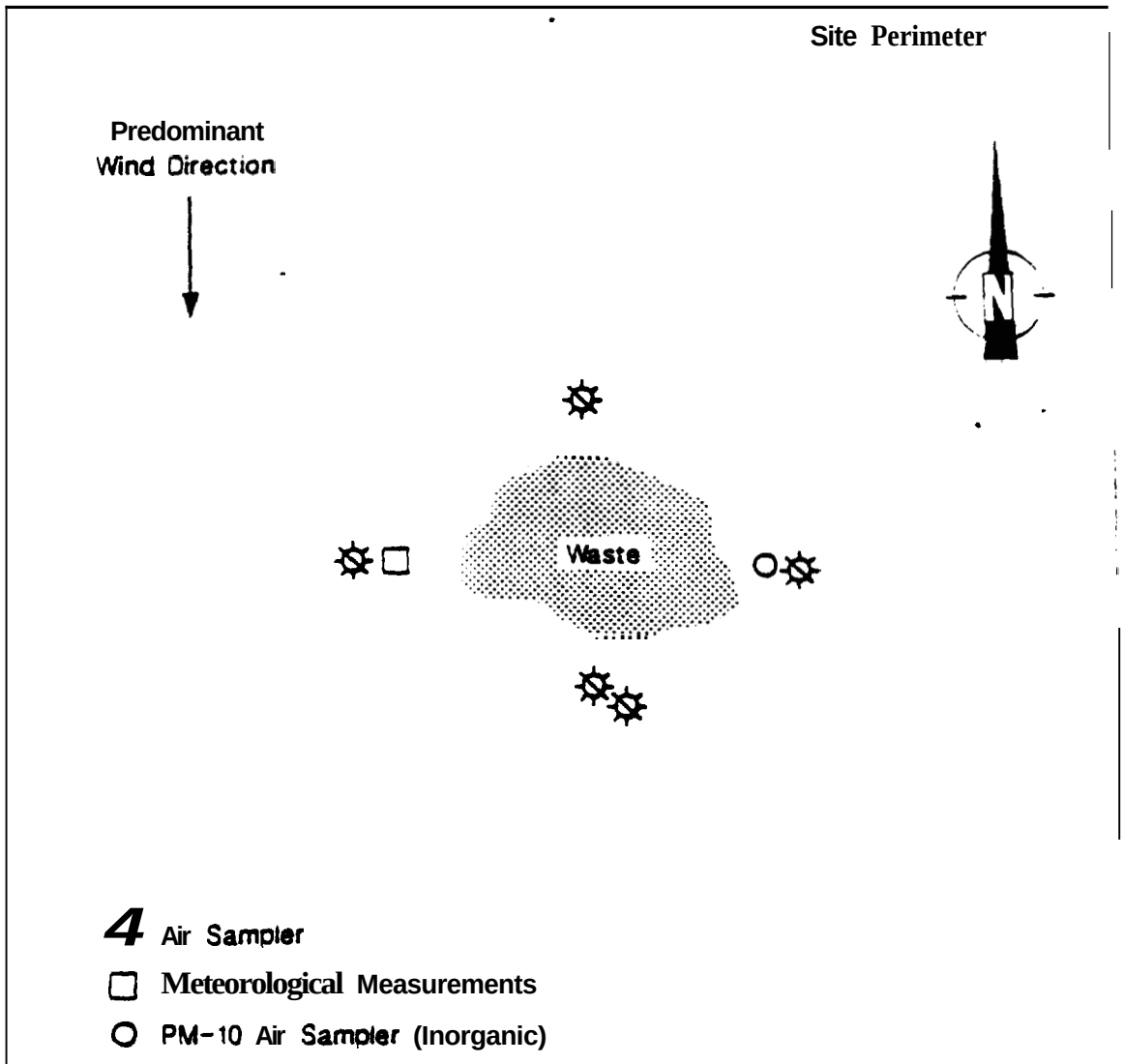

BASIC STUDY DESIGN FOR AIR SAMPLING
AT A HAZARDOUS WASTE SITE

FIELD INVESTIGATIONS OF UNCONTROLLED
HAZARDOUS WASTE SITES
TASK REPORT TO THE E.P.A.

TITLE:
AMBIENT AIR SAMPLING SOP
AIR SAMPLING LOCATION MAP

T.D.D. F08-8710-09

ecology & environment, inc.
DENVER, COLORADO

FIG. 2.1

Date: 03/88 Drawn by: RSM Scale:

0001532

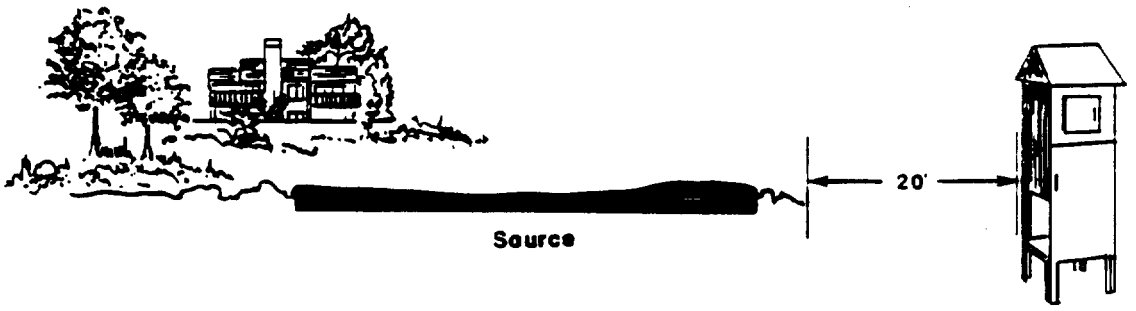

DISTANCE FROM THE SOURCE

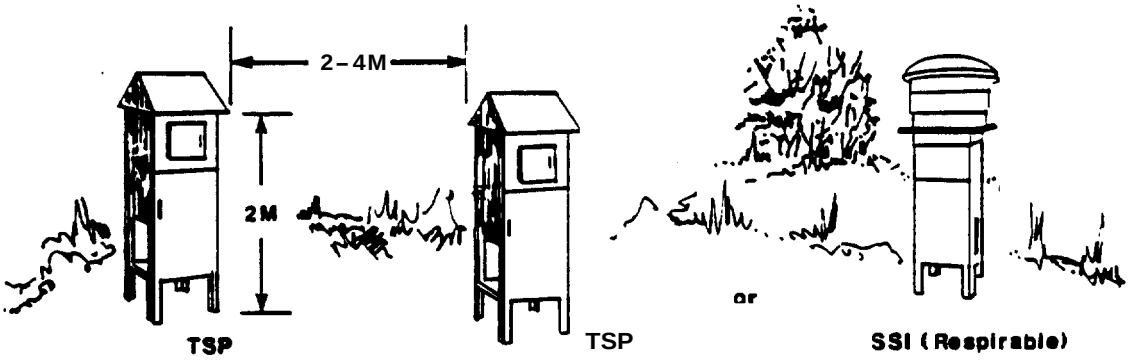

COUOCATED SAMPLERS/SAMPLER HEIGHT + ALIGNMENT

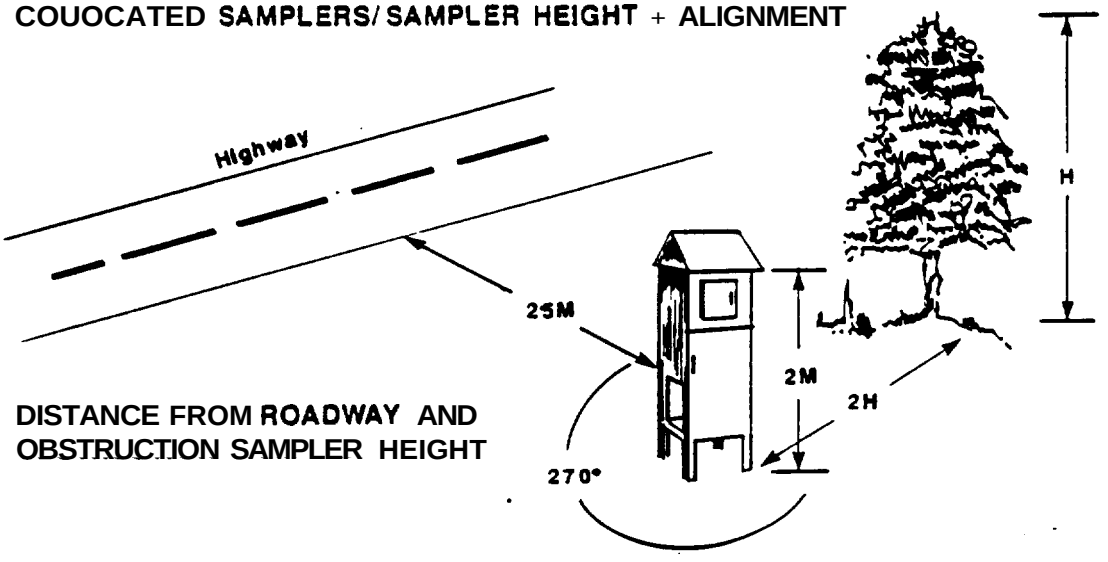

DISTANCE FROM ROADWAY AND OBSTRUCTION SAMPLER HEIGHT

FIELD INVESTIGATIONS OF UNCONTROLLED HAZAROOUS WASTE SITES
TASK REPORT TO THE E.P. A.

TITLE:

SITING CRITERIA FOR HI-VOL AIR SAMPLERS

T.O.O.

ecology & environment, inc.
DENVER, COLORADO

Date: 11/88 Drawn by: RSM Scale:

APPENDIX M

HI-VOL CALIBRATION
(SOURCE: E & E 1988)

[Bold items enclosed in brackets denote changes from original .text)

XI VOL CALIBRATION STEPS

1. Install variable resistance calibration unit on sampler head.

2. Connect manometer to orifice negative pressure tap on calibration unit and zero.

3. Bypass flow controller during calibration by plugging motor directly into power source. The sampler should come on.

4. Turn the resistance knob on the orifice unit wide open and wait approximately five minutes for the sampler to warm up and for the motor brushes to seat.

5. Connect second manometer to the positive pressure tap on the motor housing. This is the same tap connected to the flow recorder chart.

6. The negative pressure values for the manometer attached to the hi-vol calibrator are prepared by EPA-ESD. EPA-ESD provides a calibrator chart which compares pressure to flow rate in cubic meters per minute (cmm) for flow rates of:

CFM	CMM
30	0.852
35	0.990
40	1.133
45	1.274
50	1.426

CFM = cubic feet per minute

CMM = cubic meters per minute

Calculate the corresponding negative pressure manometer readings (ΔH) for the flow rates listed above, from the calibration sheet for the calibrator. (Located in the calibrator case.) This is accomplished by reading ΔH directly from the calibration sheet. Or if necessary, by calculating a regression line from the ΔH and QR (flow rate) values listed on the calibration sheet and plugging the above flow rates into the line equation.

7. Record the above CFH and CMM values on to the HI VOL SAMPLER CALIBRATION DATA SHEET in the respective column under "QR Flow Rate". Also record the AH values calculated in the previous step in the "Total" column under "ΔH (negative)".

8. Turn the resistance knob on the calibration unit until the negative pressure manometer reads the AH value calculated for 50 CFM. Record the left and right negative pressure manometer readings. Note. the manometer values are recorded by adding both up and dovn deflections together.

9. Record the right and left positive pressure manometer readings on the calibration sheet in the column under "ΔP (positive pressure)".

10. Repeat steps 8 and 9 for flov rates 45, 40, 35 and 30 CFM.

11. Recheck two of the calibration points.

12. Calculate a linear regression line for the sampler vith x being the square root of AP and y being QR in CMM. Record the slope, intercept and correlation coefficient.

HI VOL SAMPLER CALIBRATION DATA SHEET

DATE _____

PROJECT: _____

CALIBRATION ORIFICE UNIT NO. _____ CALIBRATED BY: _____

SAMPLER NO. _____ DATE _____

$Q_r = a\sqrt{\Delta P} \pm b$ _____

CORRELATION COEFFICIENT (≥0.99) OF r = _____

Q_r = _____

$\Delta P = \left[\frac{QR-b}{a}\right]^2$ ΔP = _____

Run Number	ΔH (negative) Manometer (pressure) in, Water Left / Right	Total	ΔP (x) (positive pressure) Left / Right	Total	$\sqrt{\Delta P}$	Q_r (y) Flow Rate cfm
1						
2						
3						
5						
DUP-1						
DUP-2						

DAILY PRE- AND POST-SAHPLING STEPS
FOR THE HI VOL SAMPLER

PRE-SAMPLING STEPS

1. Adjust QR to ambient conditions and record on the filter data sheet :

$$QR = Q \times \left[\frac{PA}{TA} \times \frac{298\ K}{760\ mm\ Hg}\right]^{1/2}$$

Where Q = 40 cfn = 1.133 cmm for respirable PM-10 sample
Q = 30 cfn = 0.852 cmm for TSP sample
Q = 20 cfn = 0.566 cmm for PUF sample

Note, at higher altitudes the adjusted QR will be lover than Qstd.

2. Calculate ΔP from the regression line of the sampler (calculated during calibration) for the appropriate flow rate:

$$QR = a\sqrt{\Delta P} \pm b$$

$$\Delta P = \left[\frac{QR \pm b}{a}\right]^2$$

Where a = slope
b = intercept

This ΔP reflects daily changes in temperature and pressure. Note, it is critical to have a flow rate of exactly 40 CFM actual vhen an PM-10 (SSI) head is being used to insure a 10 um mas median aerodynamic diameter (MMAD) cutpoint.

3. Remove the filter cover and prop open the top of the hi-vol. Reconnect the flow controller to the pover source. Make sure the sampler pover svitch is in the "off" position.

4. Wearing cotton gloves, vet a chemwipe with distilled water and beginning with the filter holder and cover, vipe down the surface. Continue to wipe down the inside of the hi-voi around the filter holder and the inside of the lid. Clean the area thoroughly. Once the filter holder is cleaned, do not place it in contact with the ground or other dirty surfaces. Pay particular attention to the rubber gasket which touches the filter surface.

5. Next, dry the area using a clean chemwipe following the same order.

6. Wearing a clean pair of gloves, remove a clean filter from the filter box and place it on the filter screen. Be sure not to touch anything with these gloves except the filter.

7. Record the start time on the elapsed timer. Turn on the hi-vol and the suction will seat the filter. Replace the filter cover and tighten the wing nuts so the rubber gasket makes a air-tight seal against the filter. Allow the sampler to warm up for five minutes.

8. Close and padlock the shelter top.

9. Attach a manometer to the positive pressure tap on the motor housing. Adjust the flow controller to the correct AP value to give the appropriate flow rate (40, 30 or 20 cfm).

10. Allow the sampler to run for one minute to ensure a stable flow rate and recheck the manometer reading.

11. Turn the sampler off. Set the timer to the correct time and set the start and stop times with the correct metal stops.

12. Put a nev flow recorder chart in the flow recorder and set to the

correct time. Zero the pen. Record rime set, date, saaple number and initials on the flow chart. Reconnect the flow recorder chart to the positive pressure outlet. The flov recorder is used to determine any change in flov rate during the sampling period and should not be used to determine the actual flow rate. The values on the flov chart ate not important, but the relative change is.

13. Remove the manometer and seal all doors and lids on the shelter with custody seals.

POST-SAMPLING STEPS

1. Folloving sample collection, restart the sampler and allov it to run for five minutes to stabilize the flov rate. Attach manometer to the positive pressure tap on the motor housing and determine the final ΔP. Calculate the average AP from initial and final set-points.

2. Tun off the sampler and record the elapsed timer value. Calculate the total time sampled.

3. Remove the flov recorder chart. Note any irregularities in the flov rate.

4. Unlock and open the shelter top and loosen the filter holder. Note the integrity of the custody seals.

5. Wearing clean cotton gloves, remove the filter and fold it length-vise so the particulate surfaces are touching. Be sure the gloves touch nothing but the filter. Do not introduce any extraneous contamination or particulate matter to the filter and be careful not to loosen *any* sample.

6. Fold the completed sample data sheet length-vise and place it

around the filter. Seal filter and data sheet in an envelope, which has been labeled, dated and initialed.

ecology and environment, inc.

AIR SAMPLING
HI-VOL UNITS

Project Sampler# _____ Date: _____

$QR = a\sqrt{\Delta P} = b =$ _____

$QR = 1133 \text{ cmm} \left[\frac{PA}{TA} \times \left(\frac{298°K}{760 \text{ mm Hg}} \right) \right]^{1/2}$ $TA = T°C - 273$

$\Delta P = \left(\frac{QR - b}{a} \right)^2$

Initial Set Point ΔP _____

Post Calibration Set Point ΔP _____

Temperature average (°C) _____

B.P. average (mm) _____

QR . . . . . _____

Filter# . . . . . _____

Sample# . . . . . _____

Elapsed Timer On . . . . . _____

Elapsed Timer Off . . . . . _____

Uock Timer On . . . . . _____

Clock Timer Off . . . . . _____

Total Sample Time . . . . . _____

Picture# . . . . . _____

Chain of Custody . . . . . _____

Sampler was Deconed . . . . . _____

Calibration	Left	Right
Pre-Calibrate w/ filter	_____	_____
Post Calibrate w/ filter	_____	_____

FIELD INVESTIGATIONS OF UNCONTROLLED HAZARDOUS WASTE SITES
TASK REPORT TO THE E.P.A.

TITLE:
AMBIENT AIR SAMPLING SOP
FILTER FOLDER DOCUMENT

T.D.D. F08-8710-09

ecology & environment, inc.
DENVER, COLORADO

Date: 03/88 Drawn by: RSM Scale: _____

0001538

HI-VOL AIR SAMPLING
CHECK LIST

PROBLEM	ITEMS TO CHECK
1) Hi-Val doesn't turn on	A) Check that you have power from generator or other source B) Check that all plugs are in correct sequence C) Timer turned on D) Fuse in timer E) Fuse in flow controller
'2) Hi-Vol has power but controller doesn't work	SEE #B, #E F) Probe wire plugged into controller
3) Hi-Vol turns on, motor doesn't	SEE #B G) Check brushes and vires inside motor housing, defective motor.
4) Elapsed timer doesn't work	SEE #B H) Timer defective
5) Hi-Vol won't calibrate	I) Probe not positioned properly J) Loose or missing flange housing gasket K) Defective flow controller L) Broken motor housing - leaks M) Hissing probe gasket
6) Timer won't turn on	SEE #A, #B, #C N) Wrong or missing timer trips
7) Timer won't turn off	O) Wrong or missing timer trips
8) Flow recorder not working	SEE #A, #B P) Tubing cracked or broken Q) Pen ink dried or pen not touching chart
9) Poor seal around filter	R) Gasket too hard or compressed too much
10) Generator doesn't run	S) No gas T) Low oil U) Bad spark plug V) Clogged air filter W) Stuck choke
11) Generator doesn't put out power	Return for repairs

BLOWER/MOTOR REPLACEMENT PARTS
GMWL-2000 H

Part No.	Description
2000H	Blower/Motor Assembly Complete less filter holder
2001-H	Neoprene Gasket
2002-H	Mounting Plate Motor cover
2003-H	Neoprene Gasket
115750	0.6 H.P. Motor
*B-1	Motor Brushes – Two Per Set
215276	Armature with bearings
2005-H	Motor Cushion
2006-H	Motor Mounting Ring
2007-H	Motor Housing
2010-H	Cord Retainer
2011-H	Power Cord Assembly
2015-H	Pressure Tap
2016-H	Tubing

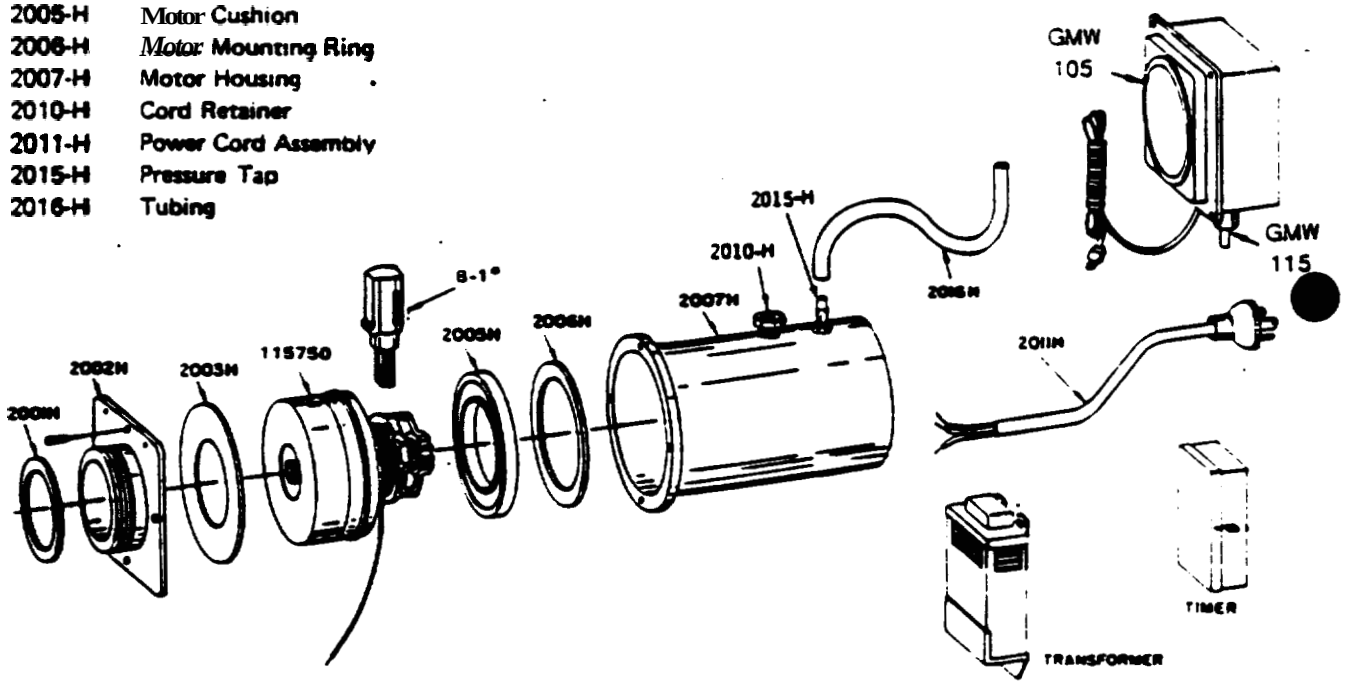

RECORDER REPLACEMENT PARTS

Part No.	Description
GMW-105	Complete recorder unit with 100 charts and cartridge pen point
GMW-106	Charts for Recorder (CFM)
GMW-107	Recorder Ink
GMW-108	Recorder Chart Motor (115V., 60Hz., 1 Ph)
GMW-110	"V" Pen Poim
GMW-113	Door Gasket
GMW-115	Hose Fining
GMW-120	Pen Ann for "V" pen
GMW-123	Back Gasket
GMW-124	Pen Arm Lifter
GMW-126	Cartridge Pen Arm
GMW-127	Cartridge Pen Poim

* Refer to page 25

MOTOR BRUSH SEATING PROCEDURE

On reassembly and handling, the lead wires must be kept away from rotating parts and motor frame.

To achieve best performance, the new brushes should be seated on the commutator before full voltage is applied.

After brush change apply approximately 50% voltage for thirty minutes to accomplish this seating. The motor will return to full performance after thirty to forty-five minutes running at full voltage.

Caution ! – Direct application of full voltage after changing brush will cause arcing, commutator pitting, and reduce overall life.

Use of the Model GMW-900 Voltage Variator Provides the reduced voltage needed for brush seating.

If reduced voltage is unavailable, connect two motors of similar rating in series for thirty minutes to accomplish the brush seating.

MODEL GMWL-2000 H

1. Remove the mounting plate motor cover (part # 2002-HL by removing the four hex-head bolts. This will expose the motor.
2. Release the power cord by turning the cap of the power cord connector (part # 2010-H) counter-clockwise.
3. Carefully let the motor slide from the housing exposing brushes.
4. Remove the brush holder clamp and release the expended brush.
5. Register new brush and replace brush holder clamp and secure to motor with the screws
6. Assemble motor after brush replacement by placing the housing over and down on the motor, being careful not to pinch any motor wires beneath the motor Mounting Ring (part # 2006-H)
7. Replace the mounting plate motor cover.
8. Gently pull the power cord back out of sampler housing and secure it with the connector cap.

WARNING – THE BRUSHES SHOULD BE CHANGED BEFORE THE BRUSH SHUNT TOUCHES THE COMMUTATOR.

SPECIAL NOTE: When ordering GMW Replacement Motor Brushes, compare brush configuration carefully!

B-1 Brush Sets used on 115750 motors furnished after January 1978

B-3 Brush Sets used on 115250 motors furnished prior to January 1978 only.

Motor Brush "U" clip connectors used with B-3 brush sets only.

B1

B3

EPA #,	Motor + Brushes	Flow Controller	Flow Recorder	TIMER	IN / OUT	extension d ds	Leds	Generations	Dates Required	Date Shipped	Date Returned	COMMENTS

0001540

The AIRCON 520 AC Constant Flow Air Sampling System

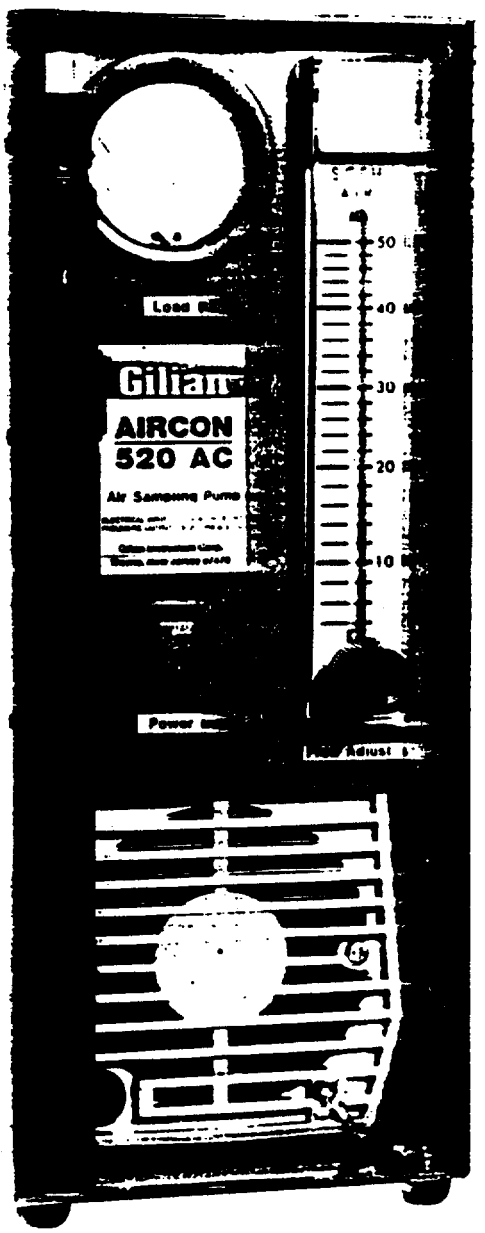

FEATURES

- CONSTANT FLOW SAMPLING FROM 2-20 LPM
- TELESCOPIC SAMPUNG MAST FOR "RESPIRATION ZONE' SAMPUNG
- INTEGRAL FLOW CONTROLLER (PAT. PEND.) ± 5% ACCURACY
- BUILT-IN HOSE COIL FOR INSTANT SET UP
- FLOW AND LOAD PRESSURE INDICATORS — INTEGRAL PANEL MOUNTING.
- COMPACT 8 PORTABLE — ALL NECESSARY SAMPLING APPARATUS IS STORED IN THE AIRCON 520 AC SAMPLER.
- COMPLETE LINE OF HIGH FLOW ACCESSORIES

Gilian®

The Gilibrator SYSTEM

Primary Flow Calibrator

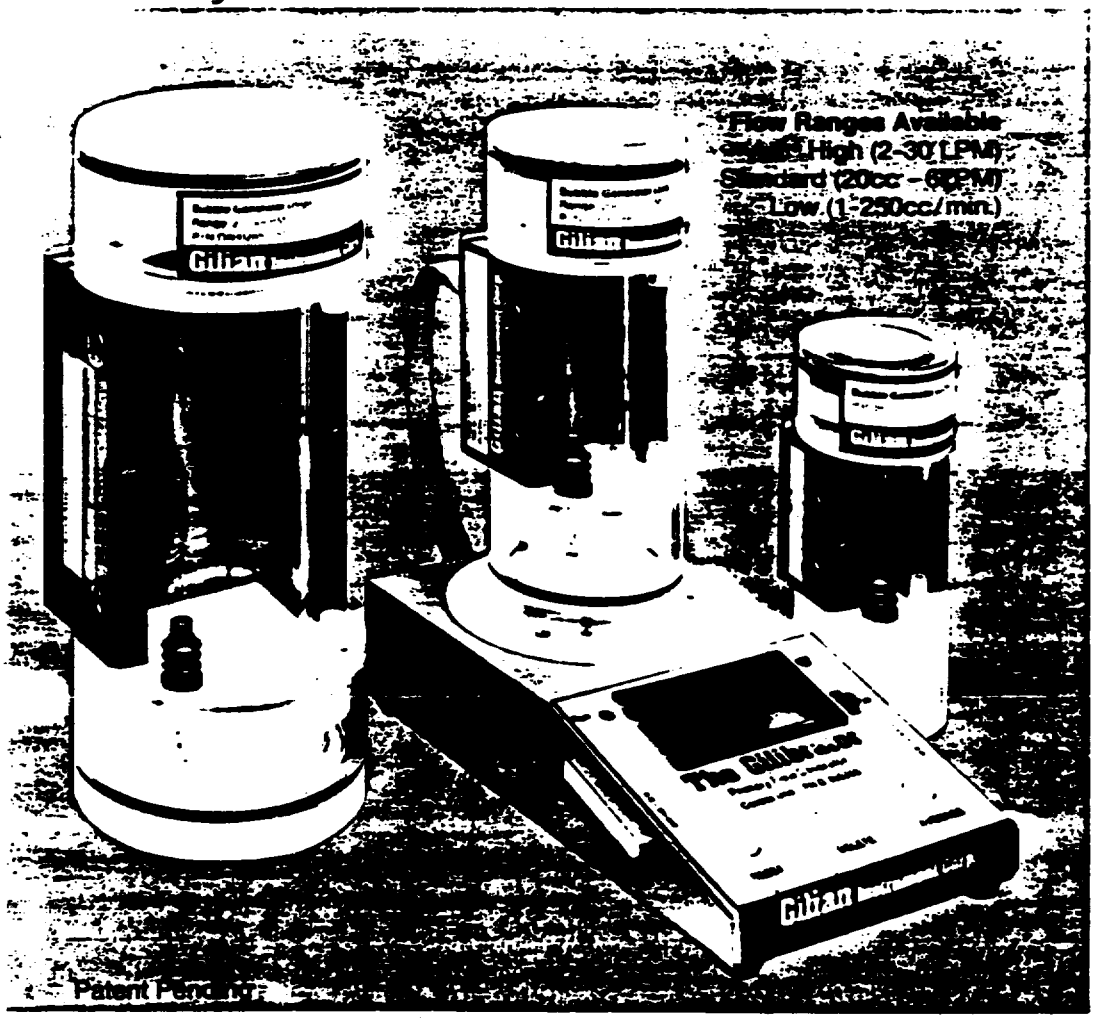

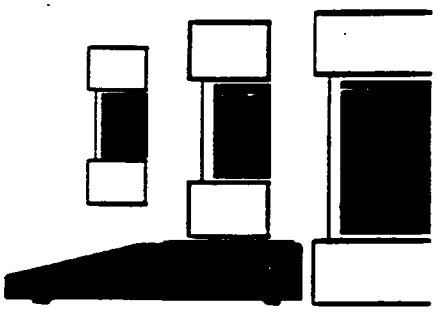

3 Interchangeable Flow Cells

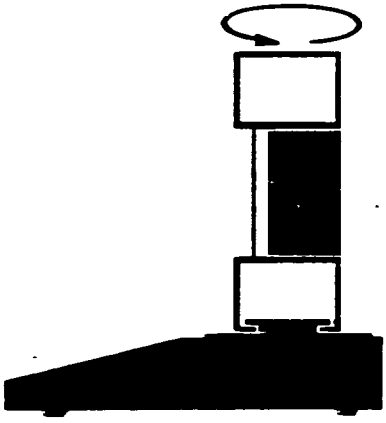

Twist On/Off Cell Mounting Design

The New Gdibrator System from Gilian is an easy to use Primary Standard for the calibration of Air Sampling equipment This unique system features 3 Interchangeable flow cells that incorporate twist-on/off mounting and a micro-processor control unit with the ability to provide hard copy from a printer module.

Individual How cells provide consistent pulsation free bubbles and me built-in infrared sensors activate instantaneously to indicate me flow readouts on me Control Units LCD display. The 3 Flow Cell ranges available are. High 92-30 LPM) Standard (20cc-6 LPM) and Low (1-250cc/min.).

The Control Unit also offers useful micro-processor functions that include Auto-Averaging of multiple flow readings and a Flow Delete funcbon mat will subtract false readings from the average and reset back to me previous value.

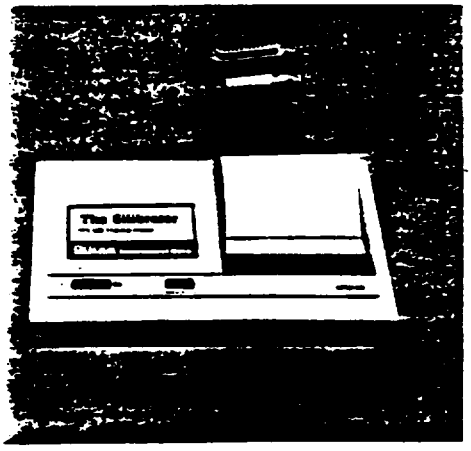

Printer Module provides Hard Copy

0001541

Gilian Instrument Corp.

APPENDIX N

SSI (PM-10) INSTALLATION
(SOURCE: E & E 1988)

e .

[Bold items enclosed in brackets denote changes from original text]

PM-10 INSTALLATION STEPS

1. Remove hi-vol standard lid.

2. Disconnect motor from the sampling filter screen and the flow controller from the hi-vol sampler. Remove filter screen and flw controller.

3. Attach PM-10 Size Selective Inlet (SSI) to hi-vol.

4. Open the hinged section on the PM-10 head and remove the metal plate that captures particles of the wrong size. Clean with soap and water.

5. Spray the clean, dry plate with silicon. The silicon produces a sticky surface to which particulates of the incorrect size will adhere and ensures collection of particulates less than 10 um MMAD on the filter.

6. Insert metal plate into the PM-10 head, close clips and seal with a custody seal.

7. Open PM-10 head to access filter and insert filter screen and reconnect flow controller and motor housing.

8. Begin <u>Pre-Sampling Steps</u>.

RESPIRABLE SAMPLE

ecology and environment, inc.

[illegible] SOUTH JACKSON STREET DENVER COLORADO [illegible]

AIR SAMPLING
HI-VOL UNITS

Project Sampler# _____ Date: _____

$$QR = a\sqrt{\Delta P - b} = _____$$

$$QR = 1133 \text{ cmm} \left[\frac{PA}{TA} \times \left(\frac{298°K}{29.30 \text{ in Hg}} \right) \right]^{1/2} \quad TA = T(°C) + 273$$

$$\Delta P = \left(\frac{QR - b}{a} \right)^2$$

Initial Set Point ΔP	_____
Post Calibration Set Point ΔP	_____
Temperature averaae (°C)	_____
3.P. average (in water)	_____
QR	_____
Filter#	_____
Sample#	_____
Elapsed Timer On	_____
Elapsed Timer Off	_____
Clock Timer On	_____
Clock Timer Off	_____
Total Sample Time.	_____
Picture#	_____
Chain of Custodv.	_____
Sampler was Oeconea	_____

Calibration	Left	Right
Pre-Calibrate w/ filter	_____	_____
Post Calibrate w/ filter	_____	_____

FIELD INVESTIGATIONS OF UNCONTROLLED HAZARDOUS WASTE SITES
TASK REPORT TO THE E.P.A.

ecology & environment, inc.
DENVER, COLORADO

FIG. 3.13

Date: 03/88 Drawn by: RSM Scale: _____

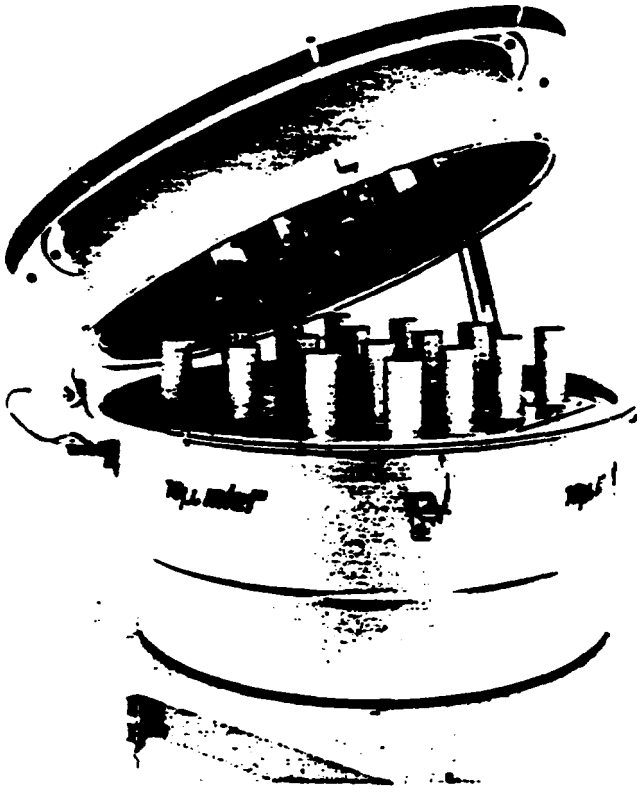

MODEL GMW-1200
PM-10 Size Selective Inlet retrofits *on* existing hi vols; Inlet opens for routine maintenance/ cleaning

PM-10 Hi Volume Air Samplers

PARTICULATE MATTER 10 **MICRON** (PM-10):

On March 20, 1984 EPA proposed revisions to the National Ambient *Air* Quality Standards tor Particulate Matter. EPA proposed that the primary standard include only those particles with an aerodynamic *diameter* smaller than *or* equal to a nominal 10 micrometers. This new standard is referred to as the "PM-10" standard (particulate matter-10 *micrometers).*

In conjunction with the new standard, EPA has developed performance specifications for instruments which will be allowed to measure compliance with the PM-10 standard. Manufacturers of candidate instruments must supply EPA with detailed wind tunnel performance data and apply for approval as either a REFERENCE METHOD or EQUIVALENT METHOD. Only instruments with official EPA approval can be used for compliance monitoring. To insure that the instrument now purchased is usable for PM-10 compliance monitoring. General Metal Works GUARANTEES to obtain EPA REFERENCE METHOD approval for the Series Accu-Vol IP-10 Size Selective Hi-Vols and the Model GMW-1200 10 Micron Sampling Inlet

INSTRUMENT DESCRIPTION:

The GMW-1200 Size Selective Inlet (SSI) attaches to General Metals and other high volume air samplers and separates particles smaller than 10 microns from the larger particles. Only the PM-10 particles pass through the GMW-1200 SSI and are collected by the 8-inch x 10-inch hi-vol filter.

The GMW-1200 Inlet meets or exceeds all of the proposed PM-10 performance specifications and includes a removable greased collection plate to prevent large particle pass-through at sites with high concentrations of coarse particles. The Inlet allows for fast, efficient cleaning during prescribed maintenance periods by simply unlatching and lifting the upper chamber. The greased / oiled aluminum collection plate is removed and cleaned. or merely replaced by a spare collection plate transported from the lab and greased in the field.

The GMW SSI was developed by Professor A.A. McFarland of Texas A & M University and meets EPA's proposed Federal Reference Method Standards for sampling PM-10 particles. The SSI easily attaches to the GMWL-2000 Basic High Volume Air Sampler. The hi-vol gabled roof is removed, the SSI is mounted *on* hinges. and four draw latches are tightened to seal the Inlet to the hi-vol *shelter.*

GMW's Accu-Vol IP-10 PM-10 Size Selective High Volume Sampling System is *the* ideal total system for accurate sampling of PM-10 particles. It consists of the GMW-1200 mounted on the basic hi-vol sampler and includes the GMW-312 Combined flow Controller/ Digital Timer-Progammer. the GMW-105 Pressure Transducer Flow Recorder, and the GMW-3000 Filter Cartridge.

SSI FEATURES:

Meets or exceeds **all** of EPA's proposed PM-10 performance specifications

Hinged sampling chamber for easy cleaning/greasing of collection plate

Removable collection plate prevents large particle bounce at high concentration sites

Improved sealing system and mounting plate

PRINCIPLE OF OPERATION

Suspended particles in the air are sampled at **40 CFM** through the circumferential inlet of the Size Selective Inlet. The symmetrical design insures wind-direction insensitivity, and the inlet design and internal configuration makes the **collection** efficiency independent of wind speed from 0 to 24 kilometers per hour. The particles are then accelerated through multiple circular impactor nozzles. By virtue of their larger momentum, particles greater than the 10 micron impactor cut-point impact onto the **greased** impaction surface. The PM-10 particles smaller than 10 microns are carried vertically upward by the air flow and down multiple vent tubes to the 8-inch x 10-inch hi-vol filter, where they are collected. The large particles settle out in the impaction chamber on the collection plate and are removed/cleaned during prescribed maintenance periods.

The hi-vol filter is weighed before and after sampling. The weight increase is the mass of particles smaller than 10 microns. The mass concentration of PM-10 particles (micrograms per cubic meter) is determined dividing the particulate mass (micrograms) by the sampled air volume (cubic meters). The air volume is properly totalized by maintaining a constant flow rate of 40 CFM with the Series 310 Flow Controllers.

SPECIFICATIONS (ACCU-VOL IP-10):

Inlet Collection Efficiency: SSI has cut-point within 10 ± 0.5 microns over a wind speed of 2 to **24** KPH; meets **EPA's** proposed PM-10 Federal Reference Method

Row **Rate:** 40 cubic feet per minute **(CFM)** 68 cubic meters per hour (CMH)

Filter Media 8-in. x 10-in. **(20**cm x 25 cm) quartz fiber filter media

Vacuum Supply: axial blower with Model GMW-8-1 carbon brushes

Accuracy of Row Control (@ 40 CFM): ± 2.5% over a filter pressure drop of 0 to 30-in. of water

Flow Event **Recorder:** pressure transducer type, **24-**hour, **4-in.** diameter circular chart

Digital Timer/Programmer (Standard): all functions digital and quartz crystal controlled: digital clock with **½-in.** LED display and 7.2 VDC rechargeable stand-by battery; includes first sample period delay up to 9 days: sample period of 1, 2, 3, 4, 6, 8, 10, **12**, 16, 20, or **24** hours: skipped time between sample periods of 1 to 9 days: **± 2** minutes per **week** accuracy

Mechanical Timer (Optional): 7-day or 6-day timer; fully adjustable start and stop times in 15 minute intervals; ± *30* minutes accuracy

Elapsed Time Indicator: xxxx.xx hours

Exterior Materials: anodized aluminum, 0.080-inch thick

Power Required: 100/115 VAC, 50/60 Hz, 8 A max; 230 VAC, *50* Hz, 4 A max

Over-all Dimensions: 64 in H max, **28** in Dia max

Net **Weight** Hi-Vol, 45 lbs; inlet, 50 lbs

Shipping Weight Hi-Vol, 60 lbs; Inlet. 65 **lbs**

PRINCIPLE OF OPERATION

MODEL 1200

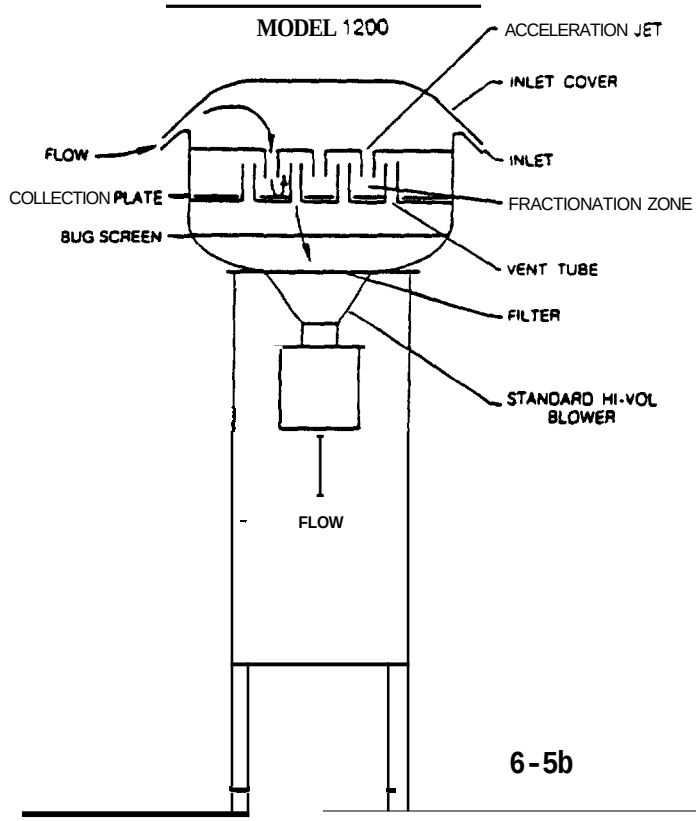

MODELS:

GMW-1200 PM-10 HIGH **VOLUME SIZE SELECTIVE INLET;**
attaches to all standard hi-vols (specify manufacturer)

ACCU-VOL IP-10 PM-10 SIZE SELECTIVE HI-VOL SAMPLING SYSTEM; includes basic high volume *air* sampler with GMW-1200 Sampling Inlet, GMW-312 Flow Controller / Digital Timer, GMW-105 Pressure Transducer Flow Recorder. and GMW-3000 Filter Cartridge

ACCU-VOL IP-10-70 SAMPLING SYSTEM; same as above. but includes GMW-313 Flow Controller / Mechanical Timer instead of GMW-312

ACCU-VOL IP-10-801 SAMPLING SYSTEM; *same* as above, but includes GMW-801 Solid-State Timer / Programmer and GMW-310 Flow Controller instead of GMW-312

ACCU-VOL IP-10-8000 SAMPLING SYSTEM; same as above. but includes GMWK-8000 Solid-State Timer / Programmer and GMW-310 Flow Controller instead of GMW-312

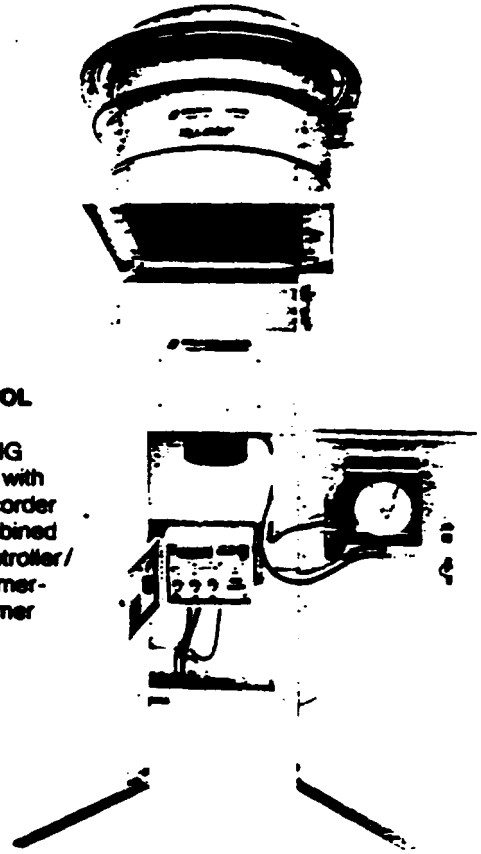

MODEL ACCU-VOL IP-10 SAMPLING SYSTEM with Flow Recorder and Combined Flow Controller / Digital Timer-Programmer

MODIFICATION KITS:

A free modification kit (GMW-1200-35) consisting of a collection plate with mounting hardware and gasket and 9 acceleration nozzles is available to those Model 321-A owners who wish to lower the cut-point of their inlet and add the greased collection plate feature.

Modification kit GMW-1200-30 consists of the plate with mounting hardware and *gasket* only, while kit GMW-1200-34 contains only 9 acceleration nozzles. These 3 free modification kits allow user flexibility in updating *older* SSIs to current standards.

For those users who desire the convenience of the easy-opening Model 1200 Sampling Inlet, GMW will exchange existing Mode) 321 or 321-A inlets for the new GMW-1200 for an exchange price of $450.00 per unit.

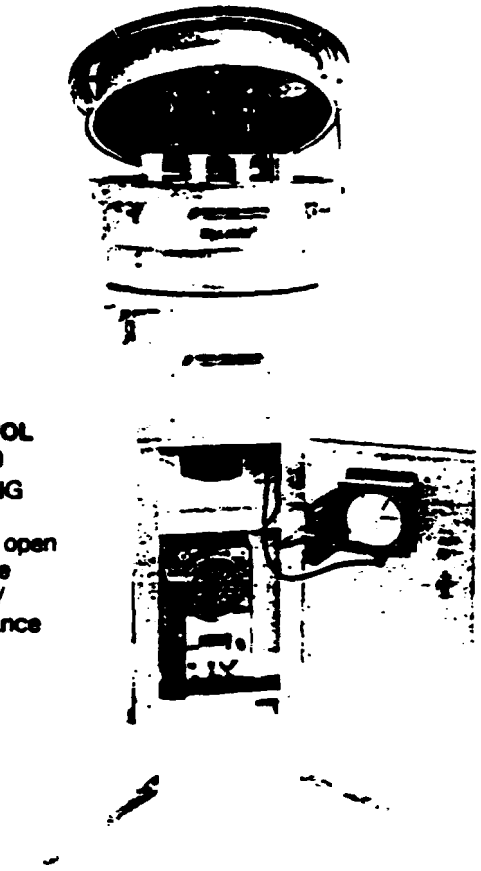

MODEL ACCU-VOL IP-10-70 SAMPLING SYSTEM with Inlet open for routine cleaning / maintenance

APPENDIX O

POLYURETHANE FOAH (PUF) SAHPLING METHOD

(SOURCE: E & E 1988)

0001545

[Bold items enclosed in brackets denote changes from original text]

PS-1 CALIBRATION STEPS

1. Calibration of the PVF sampler is performed without a foam slug or paper filter in the sampling module. However the empty glass cartridge must remain in the module to insure a good seal through the module.

2. Install the GMW-40 Calibrator on top of the 4 inch filter holder.

3. Connect an 8 inch water manometer to the calibrator.

4. Open the ball valve fully.

5 Turn the system on by tripping the manual switch on the timer. Allow a few minutes for warm-up.

6. Adjust the voltage control screw to obtain a reading of 70 inches on the Magnehelic Gage.

7. With 70 inches on the dial gage as your first calibration point, record it and the manometer reading on the data sheet.

8. Close the ball valve slightly to readjust the dial gage down to 60 inches. Record this figure and manometer reading on the data sheet.

9. Using the above procedure, adjust the ball valve for readings at 50, 40, and 30 inches and record on the data sheet.

10. Using these two sets of readings, plot a curve on the data sheet. This curve will be used for determining the actual flow rate in the field.

PS-1 CALIBRATION

HI VOL SAMPLER CALIBRATION DATA SHEET

DATE _____

PROJECT: _____

CALIBRATION ORIFICE UNIT NO. _____ CALIBRATED BY: _____

SAMPLER NO. _____ DATE _____

$Q_r = a\sqrt{\Delta P} \pm b$ _____

CORRELATION COEFFICIENT (≥0.99)
OF r = _____

Q_r = _____

$\Delta P = \left[\frac{QR-b}{a}\right]^2$ ΔP = _____

Number	ΔP in. Water Left					Flow Rate* cm cfm
1						
2						
3						
4						
5						
6						
7						
DUP-1						
DUP-2						

* Flow rate from orifice unit calibration chart of equation.

0001546

PS-1 PRE- AND POST-SAMPLING STEPS

PRE-SAMPLING STEPS

1. Disconnect the sampling module from the sampling unit and decontaminate the filter holder ring, nylon gaskets, sampling module cap, module tube and the inside of the shelter housing as described in step 3 in the PUF Decon and Installation steps.

2. Wearing clean cotton gloves, load glass cartridge into module tube and screw in module cap. Place unit into sampler and lock down.

3. Install a clean 102 mm diameter filter on the support screen and nylon gasket and secure it with the filter holder ring and swing bolts.

4. Close sampler lid, record elapsed timer and turn on sampler. Turn ball valve wide open.

5. Allow sampler to warm-up. Record magnehelic gage and set timer.

6. Close PS-1 and seal doors with custody seals.

7. Calculate flow rate in CFH from gage reading and sampler regression line.

POST-CALIBRATION STEPS

1. Turn sampler on and allow a five minute warm-up.

2. Record magnehelic gage and calculate average flow rate for sampling period.

3. Turn sampler off and record elapsed timer reading. Calculate sampling time.

4. Open shelter lid and observe integrity of the custody seals.

5. Wearing cotton gloves, remove 102 mm round filter and PUF cartridge. Be sure gloves touch nothing but the filters.

6. Cover PUP cartridge vith aluminum foil to prevent photo-degradation. Place filters in appropriate containers under chain of custody.

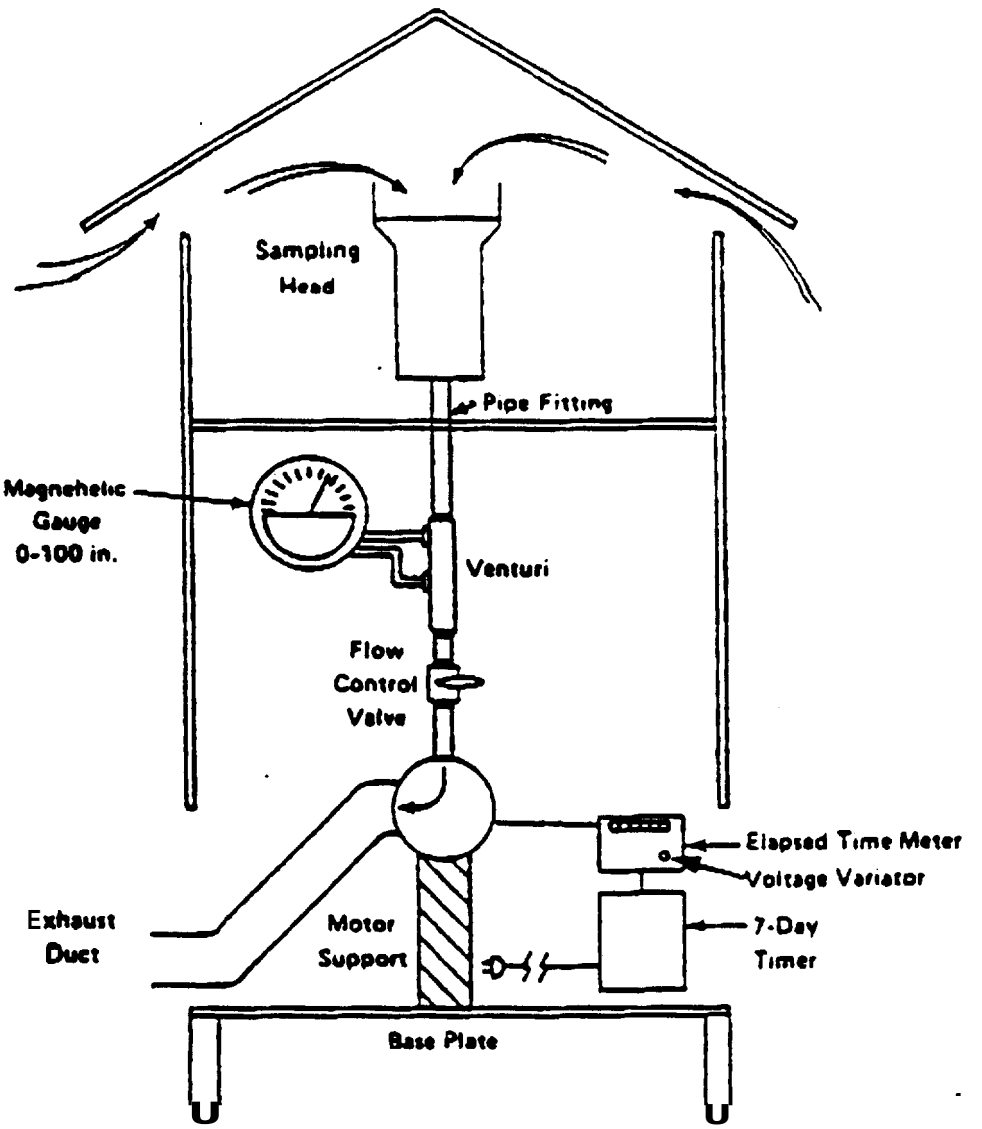

FIELD INVESTIGATIONS OF UNCONTROLLED HAZARDOUS WASTE SITES
TASK REPORT TO THE E.P.A.

ecology & environment, inc.
DENVER, COLORADO

6-6

by:

0001548

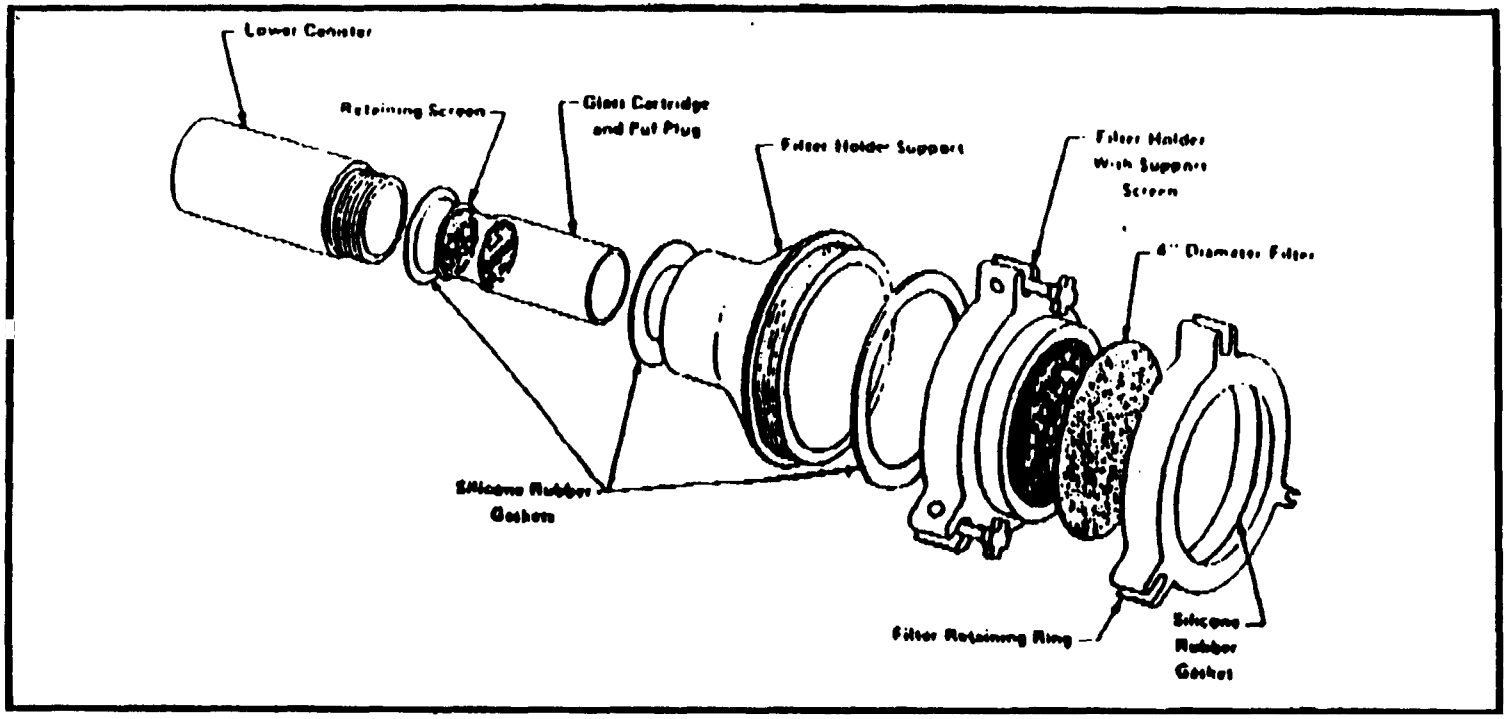

FIELD INVESTIGATIONS OF UNCONTROLLED HAZARDOUS WASTE SITES
TASK REPORT TO THE E.P.A.

TITLE

SCHEMATIC OF GMW MODEL PS-1 SAMPLER COMPONENTS

T.D.D.

ecology & environment, inc.
DENVER, COLORADO

#6-7

Date 11/88 Drawn by RSM Scale

PS-1 SAMPLE

ecology and environment, inc.

SOUTH JACKSON STREET DENVER COLORADO 80210

AIR SAMPLING
HI-VOL UNITS

Project Sampler# _____ Date: _____

$QR = a\sqrt{\Delta P}$ [illegible]

$QR = 1133$ cmm $\left[\frac{PA}{TA} \times \left(\frac{298°K}{29.90 \text{ in Hg}}\right)\right]^{1/2}$ $TA = T°C + 273$

$\Delta P = \left(\frac{QR - b}{a}\right)^2$

Initial Set Point ΔP _____

Post Calibration Set Point ΔP _____

Temperature average (°C) _____

B.P. average (in water) _____

QR . _____

Filter# . . . . . _____

Sample# . . . . . _____

Elapsed Timer On. . . . . _____

Elapsed Timer Off. . . . . _____

Clock Timer On . . . . . _____

Clock Timer Off . . . . . _____

Total Sample Time.. . . . . _____

Picture# . . . . . _____

Chain of Custody _____

Sampler was Deconed . . . . . _____

Calibration	Left	Right
Re-Calibrate w/ filter	_____	_____
Post Calibrate w/ filter	_____	_____

FIELD INVESTIGATIONS OF UNCONTROLLED HAZARDOUS WASTE SITES
TASK REPORT TO THE E.P.A.

TITLE:

AMBIENT AIR SAMPLING SOP

FILTER FOLDER DOCUMENT

T.D.D. F08-8710-09

ecology & environment, inc.
DENVER, COLORADO

FIG. 3.1.3

Scale:

PUF DECONTAMINATION,
INSTALLATION AND REMOVAL STEPS

DECON AND PUF INSTALLATION

1. Follow steps 1 through 3 in the Pre-Sampling Steps.

2. Disconnect the motor housing from the filter screen. Remove the flov controller from the filter screen (held in place by a metal band around the filter screen and tightened by a screw). Be careful not to loose the rubber gasket between the metal band and filter holder.

3. Wearing clean gloves, decon the filter holder, filter screen, throat extender and gaskets with liquinox and vater folloved by a distilled vater rinse, hexane rinse and a final distilled water rinse. The inside of the shelter is wiped down with acetone folloved by distilled vater. (Hexane may be used for the shelter since it is a better solvent for semi-volatiles, however acetone is recommended to reduce worker exposure to hexane. All sampler parts that come in contact with the filters should be deconned using hexane as the organic solvent.)

4. Connect a clean, dry throat extender to the motor housing. Wearing clean cotton gloves, insert clean PUF filters into the throat extender. Insert the PUFs so that it is flush vith the top of the throat. Take care not to touch anything vith the gloves except the PUF filters.

5. Reconnect the flov controller to the filter screen and attach the filter screen to the throat extender. Insert the motor-throat-screen unit into the sampler and reconnect the flov controller to the sampler.

6. Continue vith step 6 in the Pre-Sampling Steps.

PUF REMOVAL

1. Follow steps 1 through 6 in the Post-Samplina Steps.

2. Disconnect flow controller from the sampler. Remove motor-throat-screen unit from sampler housing and unscrew filter screen from throat extender.

3. Wearing clean cotton gloves, remove PUFs from throat extender and place in clean, labeled glass container. Cover jar containing PUFs vith aluminum foil to prevent break-down of photo-sensitive PUFs.

0001550

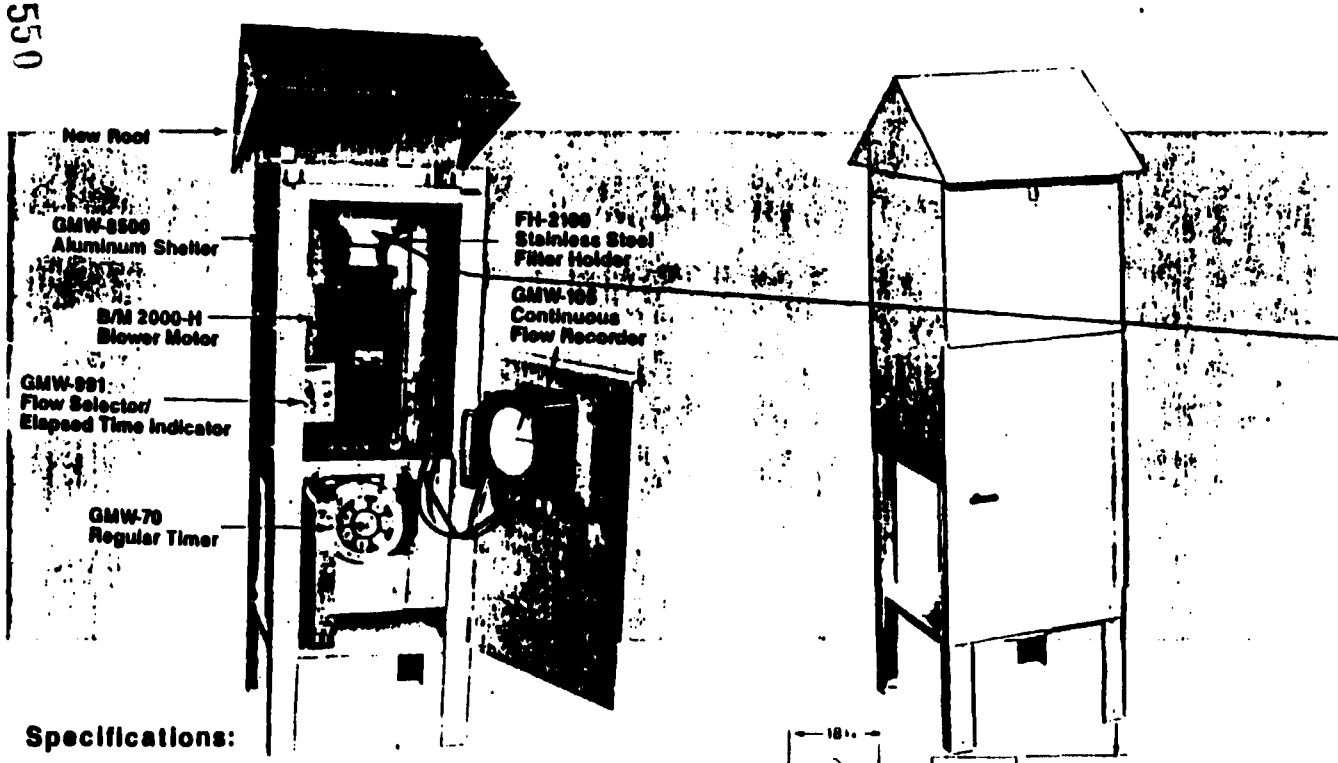

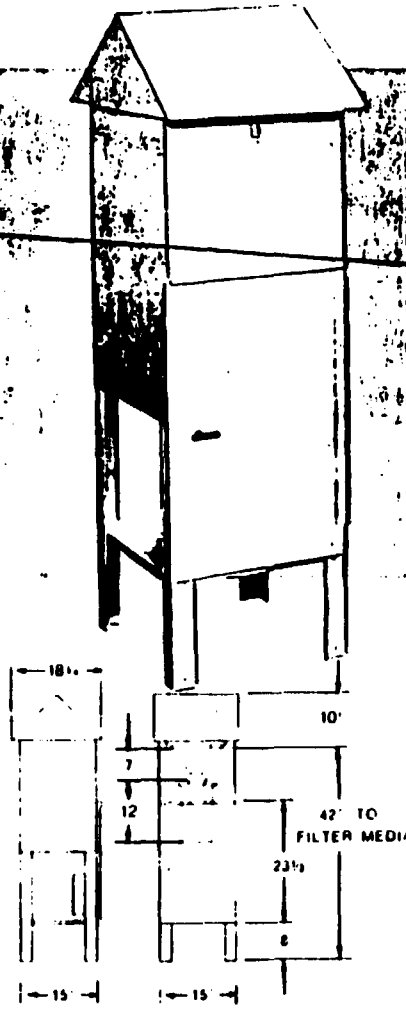

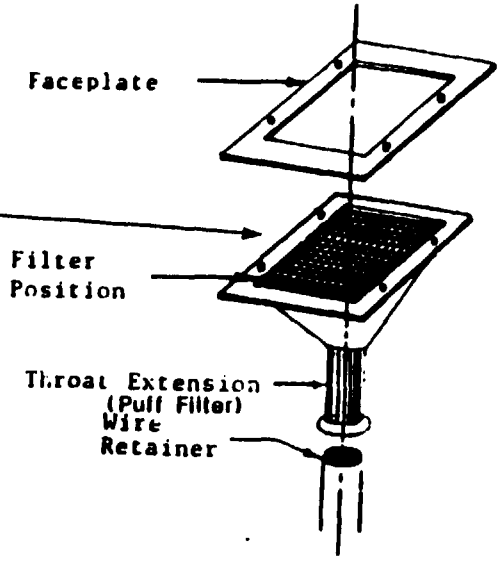

Specifications:

Motor HP — 0 6
Speed — Adjustable
Amperage — 6.25
Wattage — 745
Max Flow Rate — 60 C F M
Min Flow Rate — 20 C F M
Power Source — 115V 1 phase 60 Hertz (other electrical characteristics available on request)
Net Weight — 65 lbs
Shipping Weight — 80 lbs
Complies with Federal Register dated December 6 1982

FIELD INVESTIGATIONS OF UNCONTROLLED HAZARDOUS WASTE SITES
TASK REPORT TO THE E.P.A.

TITLE:

AMBIENT AIR SAMPLING SOP

HIGH VOLUME SAMPLING UNIT

T.D.D. F08-8710-09

ecology & environment, inc.
DENVER, COLORADO

#6-1

03/88 Drawn by: RSM

PUF SAMPLE

ecology and environment, inc.

[illegible] SOUTH JACKSON STREET DENVER CO. [illegible]

AIR SAMPLING
HI-VOL UNITS

Project Sampler# _____ Date: _____

$QR = \sqrt{\Delta P - b} =$ _____

$QR = 1.33 \text{ cmm} \left[\frac{PA}{T_A} \times \left(\frac{298°K}{29.30 \text{ in Hg}} \right) \right]^{1/2}$ $T_A = T°C + 273$

$\Delta P = \left(\frac{QR - b}{a} \right)^2$

Initial Set Point ΔP	_____
Post Calibration Set Point ΔP	_____
Temperature average (°C)	_____
B.P. average (in. water)	_____
QR	_____
Filter#	_____
Sample#	_____
Elapsed Timer On	_____
Elapsed Timer Off	_____
Clock Timer On	_____
Clock Timer Off	_____
Total Sample Time	_____
Picture#	_____
Chain of Custody	_____
Sampler was Deconed	_____

Calibration	Left	Right
Pre-Calibrate w/ filter	_____	_____
Post Calibrate w/ filter	_____	_____

FIELD INVESTIGATIONS OF UNCONTROLLED HAZARDOUS WASTE SITES
TASK REPORT TO THE E.P.A.

TITLE:

AMBIENT AIR SAMPLING SOP

FILTER FOLDER DOCUMENT

T.D.D. F08-8710-09

ecology & environment, inc.
DENVER, COLORADO

FIG. 3.1.3

Date: 03/88 Drawn by: RSM Scale: _____