ecology and environment, inc.
316 SOUTH BAYLEN STREET, PENSACOLA. FLORIDA 32501, TEL. (904) 435-8925
International Specialists in the Environment

32501.032
19.06.32.0022
N00204.AR.000237
NAS PENSACOL
5090.3a

June 28, 1991

Commanding Officer
Attn: (Code 18211)
Southern Division
Naval Facilities Engineering Command
2155 Eagle Drive, P.O. Box 10068
Charleston, SC 29411-0068

RE: Groundwater Monitoring Well Completion Report, Industrial Vastevater Treatment Plant, Naval Air Station Pensacola, Florida Contract No. N62467-88-C-0200.

Dear Sir:

Ecology and Environment, Inc., (E & E) is pleased to submit the final Groundwater Monitoring Well Completion report for three newly installed wells (PCS-1, PCI-1 and PCD-1) at the Industrial Wastewater Treatment Plant (IWTP), Naval Air Station (NAS) Pensacola, Florida. The report incorporates comments E & E received on June 10, 1991, from Ms. Suzanne O. Sanborn of the Southern Division. E & E's responses to these comments are shown on the attached Southern Division Design Coordination and Review Comments Form.

The groundwater monitoring wells were installed as a well cluster in the location shown on Figure 1-1. Attachment A contains the Geologist Logs for the three monitoring well boreholes. Attachment B contains the schematic diagrams of the monitoring well construction. Attachment C contains copies of the E & E daily field log maintained during the well installation. Attachment D contains the signed and sealed Florida Professional Geologist Seal Form for this report.

As always, if there are any questions or comments concerning the report or other matters pertaining to the contract, please feel free to contact me or John Barksdale at (904) 435-8925 or Rick Rudy at (904) 877-1978.

Sincerely,

ECOLOGY AND ENVIRONHENT, INC.

Brian Caldwell

Brian Caldwell
Project Manager

BC/mv/522

Enclosures

cc: G. Campbell; NAS Pensacola Public Works Center
J. Wilcox; E & E--Buffalo/Central File UH7000
R. Rudy; E & E--Tallahassee/Central File
J. Barksdale; E & E--Pensacola

recycled paper

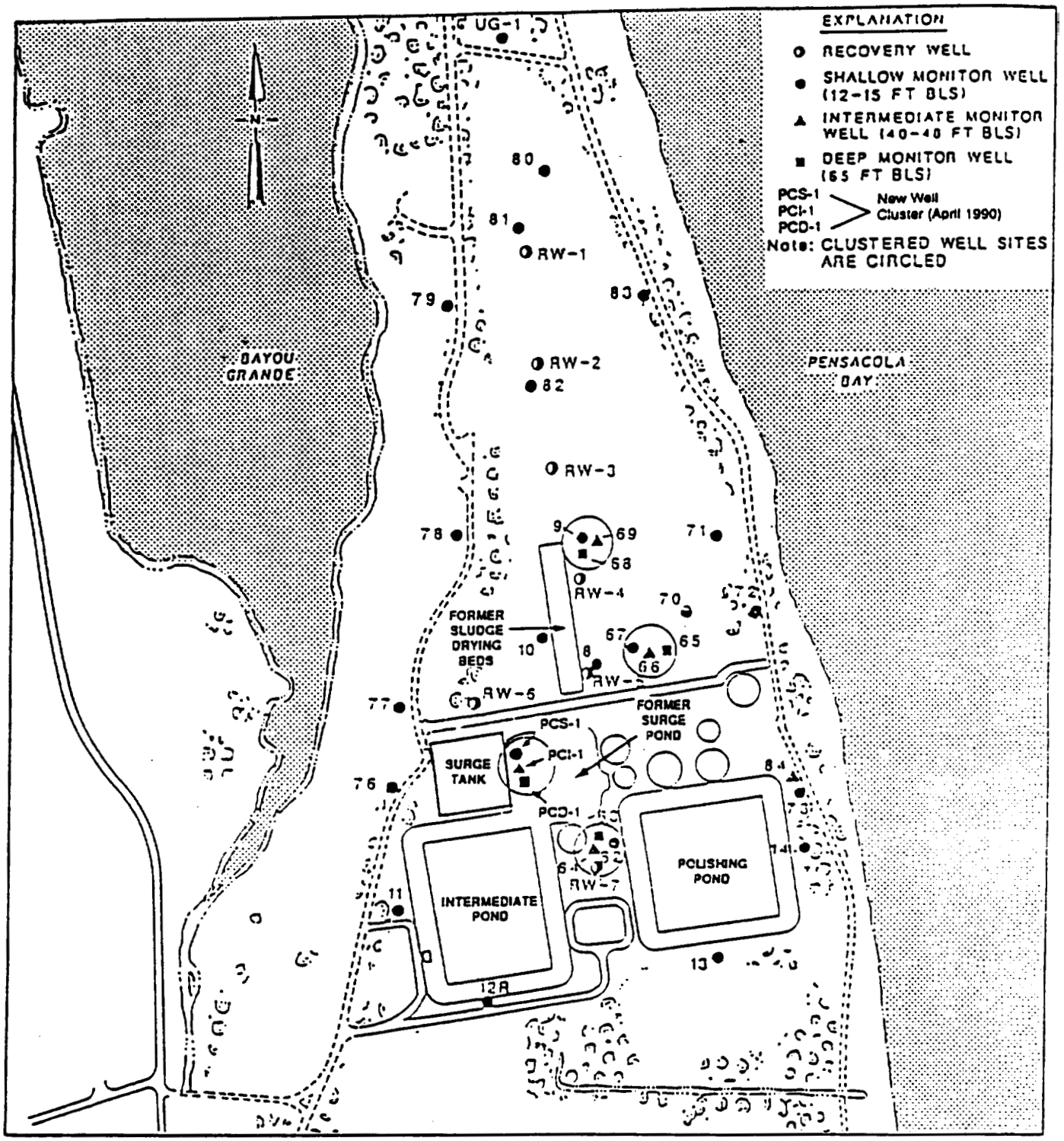

SOURCE: Geraghty & Miller, Inc. 1988; E & E, 1990

SCALE

0 300 600 FEET

Figure 1-1
LOCATIONS OF MONITORING AND RECOVERY WELLS AT NAS PENSACOLA WASTEWATER TREATMENT PLANT

ATTACHMENT A

GEOLOGIST LOGS

ecology and environment, inc.

Site Name	NAS Pensacola	Drilling Firm	Thomason Well Drilling
Location	Wastewater Treatment Plant	Type of Drill	CT350 Torquemaster
TDD#	UH5000	Driller/Helper	Mark Kelly/Mike Sawyer/Jim Williams
		Geologist	Brian Caldwell/Justin Strickland

Start Date	4/9/90	T.O.I.C. Elevation		Depth to Groundwater		Date
Completion Date	4/9/90	Depth of Boring	20' BLS*	while drilling		
Boring Location	West side of former surge pond	Lock Number		at completion	(TOIC)	
		Drilling Methods	8¼" ID HS Auner	after 2 days	9.60 (TOIC)	4/11/90

Well Casing (Type & Qty.):

Screen Interval (Type & Qty.): PVC/Schedule 40/.015 slot/5'

Annulus Material Above Sed: Bentonite/Grout Mix

Seal: Bentonite

Screen: Quartz Sand

Sample Depth From- To	Blow Count	Rec. ft.	Lithologic Description
0 - 5.0			Sand; yellow to light brown; coarse
5.0 - 10.0			Sand; yellow to brown; coarse
10.0 - 15.0			Sand; light brown to light grey/ coarse
15.0 - 20.0			Sand; white to light grey; coarse- to med.-grained

ecology and environment, inc.

Well Development Comments:

Sample Depth From - To	Blow Count	Rec. ft.	Lithologic Description
0 - 5.0			Sand: vellow to dark grev; (fill sand): coarse
5.0 - 10.0			Sand; erev to light grev/white; saturated; coarse
10.0 - 15.0			Sand: light grey; coarse; saturated
15.0 - 20.0			Sand; grey; coarse; saturated
20.0 - 25.0			Sand; grey; coarse- to med.-grained; saturated
25.0 - 30.0			Sand; grey, coarse- to med.-grained; saturated
30.0 - 35.0			(Sand; grey to light brown; med.- to coarse-grained;
			very saturated.
35.0 - 40.0			Sand: dark brown; medium, saturated/lppm
60.0 - 45.0			Sand: dark grev; medium; saturated/lppm

*BLS - Below Land Surface

ecology and environment, inc.

Site Name	NAS Pensacola	Drilling Firm	Thomason Well Drilling
Location	Wastewater Treatment Plant	Type of Drill	Hollow-stem Auger (Canterra)
TDD#	UH5000	Driller/Helper	Mark Kelly/Mike
		Geologist	Justin Strickland

Boring Number	PCD-1 (Deep)	Ground Elevation				
Start Date	4/3/90	T.O.I.C.Elevation		Depth to Groundwater		Date
Completion Date	4/5/90	Depth of Boring	72' BLS*	while drilling		
Boring Location	West side of	Lock Number		at completion	(TOIC)	
	former surge pond	Drilling Methods	HS Auger	after 6 days	8.48 (TOIC)	4/11/90

Well Casing (Type & Qty.): PVC/Schedule 40/65'

Screen Interval (Type & Qty.): PVC/Schedule 40/5'/.015" slot

Annulus Material Above Seal: 95% Portland/5% Bentonite

Seal: Bentonite

Screen: Quartz Sand

Well Development Comments:

Sample Depth From - To	Blow Count	Rec. ft.	Lithologic Description
0 - 2.5			Sand; brown to dark grey; med.-grain/No odor
2.5 - 5.0		1.2	Sand; brown to dark brown; med.-grain/No odor
6.0 - 8.0		1.75	Sand; It. brown w/ dk. grey streak; med.-grain/40ppm
			No odor.
8.0 - 10.0		2.0	Sand w/ some clay; It. brown w/ a red clay layer
12.0 - 14.0		1.9	Sand; lt. brown w/ some red clay; coarse; saturated/
			4.5ppm; Slight odor.
14.0 - 16.0		1.0	Sand; lt. grey; med.-grain; saturated/4.5ppm; Bo
			odor.
16.0 - 18.0		2.0	Sand; lt. grey-brown to grey; med.-coarse grain;
			saturated/10ppm; Slight odor.
18.0 - 20.0		2.0	Sand w/ some clay; grey to red clay (clay last 2" in
			spoon); saturated/0ppm; No odor
20.0 - 22.0		2.0	Sand; lt. grey to grey; med.-grain; saturated/
			2ppm; No odor.
22.0 - 24.0		2.0	Sand; grey to dk. grey/black (color change @ 23');
			med.- to coarse-grain/2ppm; No odor.
24.0 - 26.0		2.0	Sand; grey, med.- to coarse-grain; saturated/ 3ppm;
			No odor.
26.0 - 28.0		2.0	Sand; grey; med.- to coarse-grain; saturated/

*BLS - Below Land Surface

Sample Depth From • To	Blow Count	Rec. ft.	Lithologic Description
			0ppm, No odor.
28.0 - 30.0		1.75	Sand; grey, med.- to coarse grain; saturated/0ppm;
			Sulfur odor.
30.0 - 32.0		2.0	Sand; grey to black (last 2"); coarse-grain; saturated/
			2ppm; Sulfur odor.
32.0 -34.0		2.0	Sand: dk. brown; coarse-grain; saturated/lppm; Sulfur
			odor.
34.0 - 36.0		1.75	Sand; dk. brown; coarse-grain; saturated/3ppm; Sulfur
			odor.
36.0 - 38.0		2.0	Sand; lt. grey; med.- to coarse-grain; saturated/
			0ppm: Slight sulfur odor.
38.0 - 40.0		1.5	Sand; dk. grey; med.-grain; saturated/2-4ppm; Slight
			sulfur odor.
			lppm; Slight sulfur odor.
42.0 - 44.0		2.0	Sand; dk. grey; fine-grain; saturated/0ppm; Slight
			sulfur odor.
44.0 - 46.0		1.8	Sand; dk. grey; fine-grain; saturated/10ppm; Slighr
			sulfur odor.
46.0 - 48.0		2.0	Sand-46-47.9'; silty sand-47.8-48' w/some clay-dk.
			grey to green/lppm; Slight sulfur odor.
48.0 - 50.0		1.0	Sand; fine-grain; grey; saturated/.4ppm; Slight
			sulfur odor.
50.0 - 52.0		1.0	Sand; grey; fine-grain; saturated/0ppm; Slight sulfur
			odor.
52.0 - 54.0		1.0	Sand; grey; fine-grain; saturated/.4ppm; Slight sulfur
			odor.
54.0 - 56.0		1.0	Sand; grey; dk. grey; very fine-grain; saturated/
			0ppm; Slight sulfur odor.
56.0 - 58.0		2.0	Very fine sand-56-56.5'; silty clay w/ some sand;
			silty clay-56.5-58' w/shell fragments; dk. grey-
			green, blue/0ppm; Slight sulfur odor.
58.0 - 60.0		2.0	Sand-58-59'; silty clay-59-60' w/ shell fragments;
			blueish-grey to green/.4ppm; Slight sulfur odor.
60.0 - 62.0		2.0	Sand-60-60.5'; silty clay-60.5-62' w/ shell fragments;
			blueish-grey to green; 0ppm; Slight sulfur odor.

Boring Number _____ Cont.

Sample Depth From - To	Blow Count	Roc. ft.	Lithologic Description
62.0 - 64.0		2.0	Sand; grey to lt. grey; fine-grain w/ very little
			shell fragments/0ppm; Slight sulfur odor.
64.0 - 66.0		2.0	Sand; grey; med.- to fine-grain; no fragments;
			saturated/1ppm; Slight sulfur odor.
66.0 - 68.0		1.5	Sand; grey; med.-grain; saturated/0ppm; Slight sulfur
			odor.
68.0 - 70.0		1.5	Sand; lt. grey; med.-grain; saturated/.4ppm; Slight
			sulfur odor.
70.0 - 72.0		2.0	Silty clay (90%) w/ some sand (10%); wood and shell
			fragments/0ppm; No odor.

ATTACHMENT B

SCHEMATIC DIAGRAMS OF

MONITORING WELL CONSTRUCTION

DEPARTMENT OF THE NAVY
SOUTHERN DIVISION
NAVAL FACILITIES ENGINEERING COMMAND
2155 EAGLE DR., P. O. BOX 10068
CHARLESTON, S. C. 29411-0068

WELL CONSTRUCTION DETAILS

WELL NUMBER PCS-1

DATE OF INSTALLATION 4/4/90

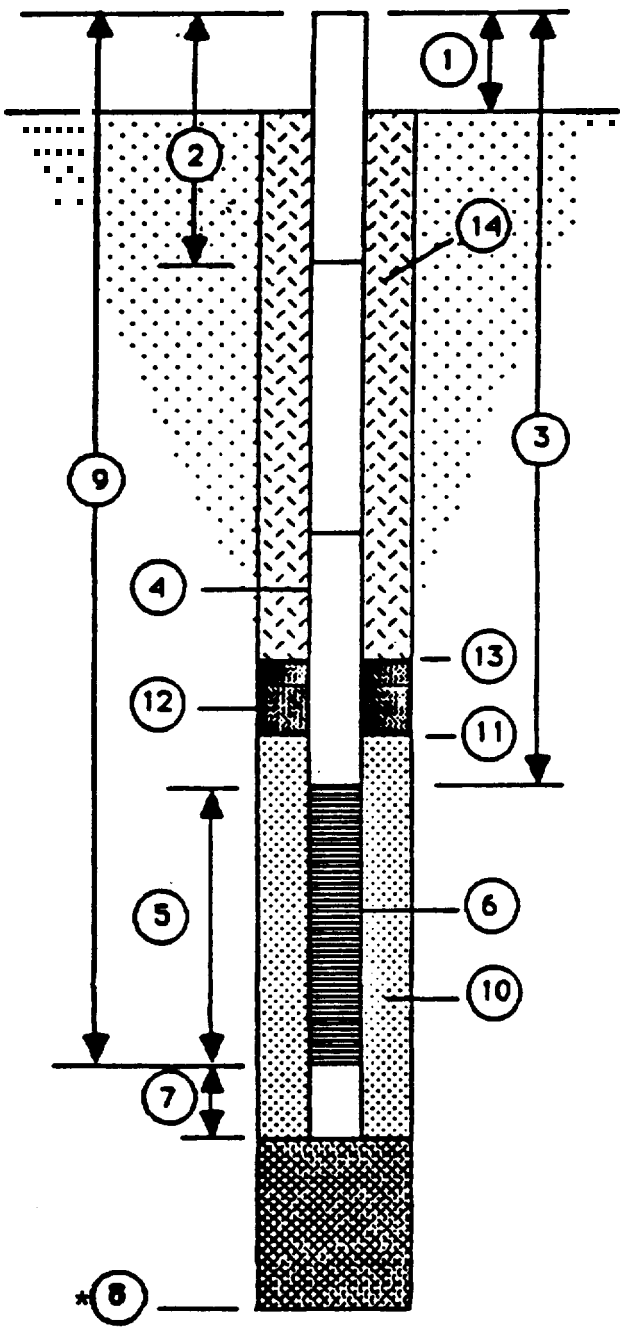

1. Height of Casing above ground 2.5'
2. Depth to first Coupling 7.5'

   Coupling Interval Depths 7.5', 17.5'

3. Total Length of Blank Pipe 17.5'
4. Type of Blank Pipe PVC/Schedule 40/4" dia.
5. Length of Screen 4.75'
6. Type of Screen PVC/Schedule 40/.015 slot
7. Length of Sump .25'

*6. Total Depth of Boring 20.0' Hole Diameter 0.854'

9. Depth To Bottom of Screen 22.25'
10. Type of Screen Filter Quartz Sand

    Quantity Used 360 lbs. Size 20-40 U/C

11. Depth To Top of Filter 16.5'
12. Type of Seal Bentonite

    Quantity Used 1/3 Bag

13. Depth To Top of Seal 14.5'
14. Type of Grout Portland cement 6 Bentonite

    Grout Mixture 95% Cement/5% Bentonite

    Method of Placement Tremie Pipe

COMMENTS ON INSTALLATION:

*Represents total depth of boring below land surface

DEPARTMENT OF THE NAVY
SOUTHERN DIVISION
NAVAL FACILITIES ENGINEERING COMMAND
2155 EAGLE DR., P. O. BOX 10068
CHARLESTON, S. C. 29411-0068

WELL INSTALLATION DETAILS

WELL NUMBER PCI-1

DATE OF INSTALLATION 4/6/90

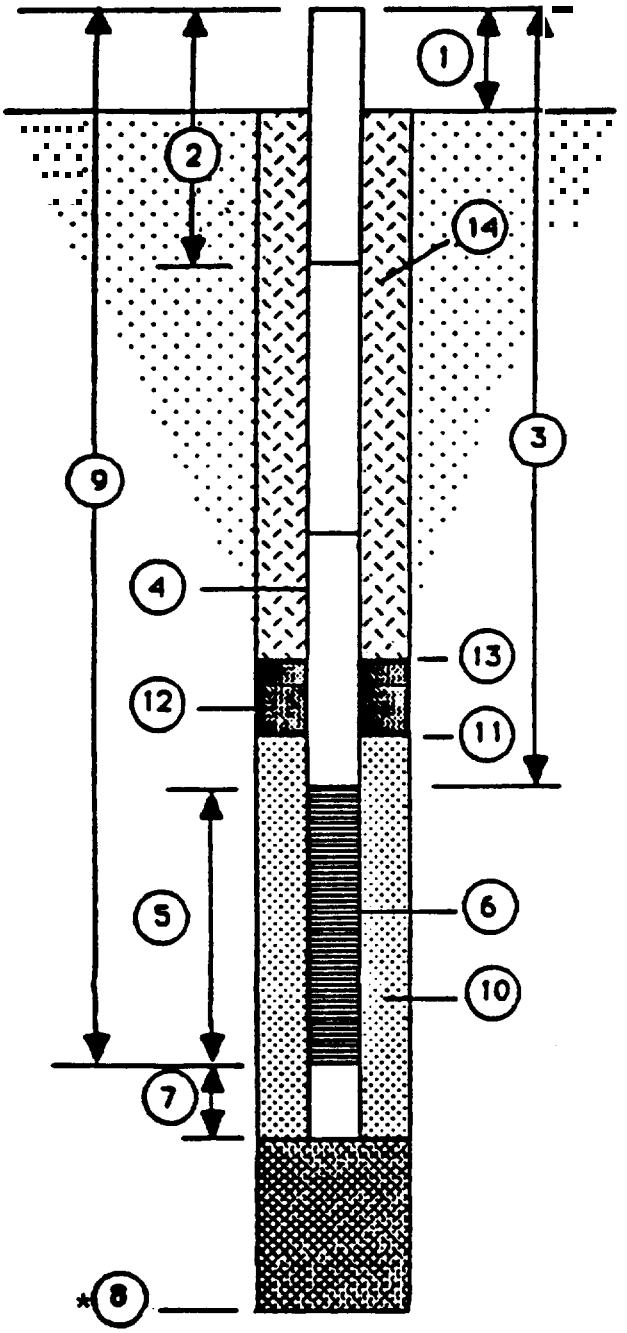

1. Height or Casing above ground 2.5'
2. Depth to First Coupling 2.5'

   Coupling Interval Depths 2.5'. 22.5'. 42.5'
3. Total Length of Blank Pipe 42.5'
4. Type of Blank Pipe PVC/Schedule 40/4" dia.
5. Length of Screen 4.75'
6. Type of Screen PVC/Schedule 40/.015 slot
7. Length of Sump .25'

*8. Total Depth of boring 45.0' Hole Diameter 0.854'

9. Depth To Bottom of Screen 47.25'
10. Type of Scream Filter Quartz Sand

    Quantity Used 360 lbs. Size 20-40 U/C
11. Depth To Top of Filter 41.5'
12. Type of Seal Natural Bentonite

    Quantity Used 1/3 Bag
13. Depth To Top of Seal 39.5'
14. Type of Grout Portland Cement/Bentonite

    Grout Mixture 95% Cement/5% Bentonite

    Method of Placement Tremie Pipe

COMMENTS ON INSTALLATION:

Heaving sands necessitated "washing" casing/screen inside augers to total depth with clean water and tremie pipe.

*Represents total depth of boring below land surface

DEPARTMENT OF THE NAVY
SOUTHERN DIVISION
NAVAL FACILITIES ENGINEERING COMMAND
2155 EAGLE DR., P. O. BOX 10068
CHARLESTON, S. C. 29411-0068

WELL CONSTRUCTION DETAILS

WELL NUMBER PCD-1

DATE Of INSTALLATION 4/5/90

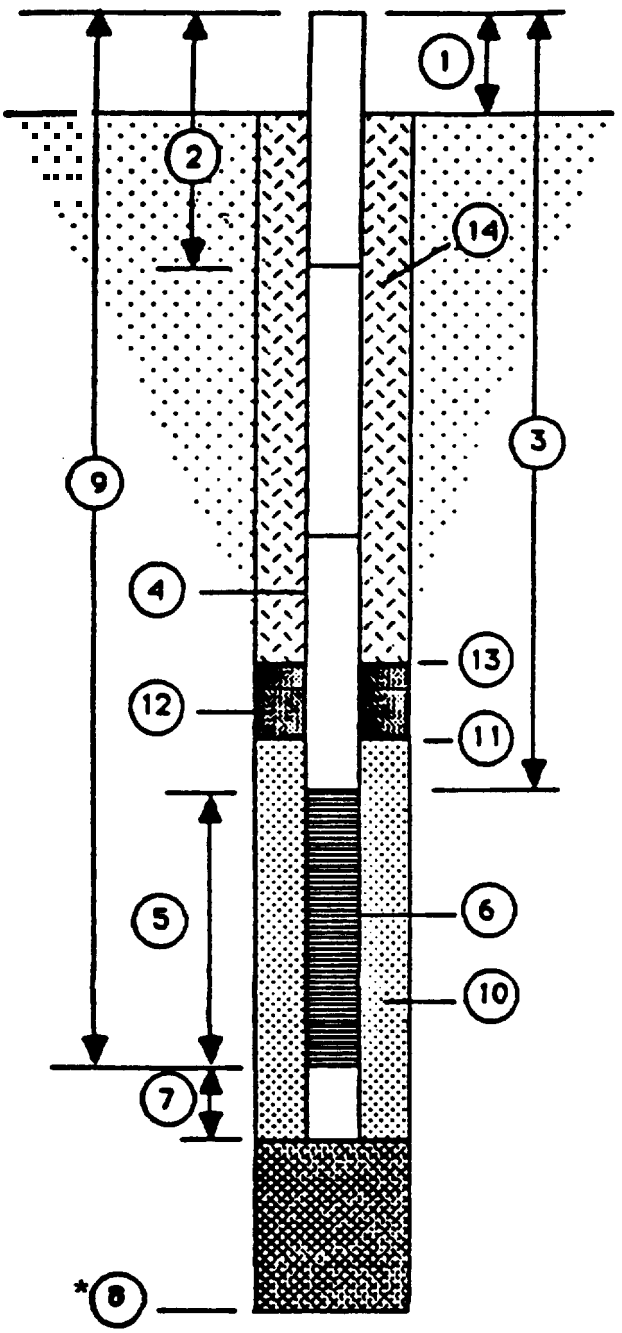

1. Height of Casing above ground 2.5'
2. Depth to first Coupling 7.5'

   Coupling Interval Depths 7.5', 27.5', 47.5', 67.5'
3. Total Length of Blank Pipe 67.5'
4. Type of Blank Pips PVC/Schedule 40/4" dia.
5. Length of Screen 4.75'
6. Type of Screen PVC/Schedule 401.015" slot
7. Length of Sump .25'

*8. Total Depth of Boring 72.0' Hole Diameter 0.854'

9. Depth To Bottom of Screen 72.25'
10. Type of Screen Filter Quartz Sand

    Quantity Used 360 lbs. Size 20-40 U/C
11. Depth To Tup of Filter 66.5'
12. Type of Seal Natural Bentonite (Pellets)

    Quantity Used 113 Bag
13. Depth To Top of Seal 64.5'
14. Type of Grout Portland Cement/Bentonite

    Grout Mixture 95% Cement/5% Bentonite

    Method of Placement Tremie Pipe

COMMENTS ON INSTALLATION:

Heaving sands necessitated "washing" casing/screen inside augers to total depth with clean water and tremie pipe.

*Represents total depth of boring below land surface

ATTACHMENT C

FIELD LOG

3 April 90 - Clear, cool, northwind
E+E Team Ldr: Brian Caldwell
H+S officer: Justin Strickland
1300 - E+E and Thomason: Safety Mtg
conducted by B. Caldwell -
Jimmy Williamson Thomason
Mike Sawyer Thomason Well Drilling
Mark Kelly Thomason Well Drilling

1330 - Tho. sets rigs up on 1st hole

Driller
1400 - Driller leaves to get materials for decon pit
1600 - Driller returns

1410 - E+E (B. Caldwell) advises Environmental NAS of the presence of drummed waste upon completion of wells - they advise to place drums on N side of site near sludge-drying bldg. + they will pick up.

1600 - E+E establish hot line / set up decon pit + prepare to spud in / (Drillers augers were decanned + alcohol sprayed on site)
HNu calibrated (BEC) - Span 7.12, 58 ppm, 10 L
1627 - Driller spudded in - 2.5' BLS / Taking 1st spoon / Mini Rad OK / LEL, %O OK #0

BEC

HNU background 0 ppm
1633 - 1st spoon out / 0 + ppm

1643 - Down to 5' BLS / prep 2nd spoon

1648 - 2nd spoon out - 10 - 40 ppm / O_2: 22, LEL

1659 - Down to 7.5' BLS / prep 2nd spoon

1700 - 2nd spoon / 40 ppm / O_2: 22, LEL: 0
Mini Rad: 0

1712 - Down to 10' BLS w/ Augers / 12.0' spoon:

1720 - Down to 12' BLS - Augers / 4 ppm 14' spoon

1734 - Down to 14' Augers / 4 ppm 16' spoon

1738 - Down to 16' Augers / 10 - 18' spoon - 0 ppm

1754 - Down to 18' Augers (0 ppm) / 18-20' spoon -

1800 - Drillers knock off for day / site stabilized

1830 - E+E / Thomason off-site.

BEC

4 April 90

Clear, cool, no wind

Ert Personnel: Justin Strickland - HSOffker
Brian Caldwell - Tim Lander

0700 - Arrive on site (2+2) / drillers not here yet.

0950 - Strickland calibrates HNu at 57 ppm w/ 7.6 λ span & warms up Explosimeter

0957 - Jimmy (Colrill crew) arrives on-site. Caldwell sets up Explosimeter on drill rig

1000 - Mark & Mike (driller + helper) arrives on site.

1014 - 20-22' screen - 2 ppm (at screen)
Explo: 22.9% C_2 0 ppm BZ > During
Minerals: ok .2 ppm BH > Drilling

1021 - 22-24' screen -
Explo: ok 0 ppm BZ > During
Minerals ok 0 ppm BH > Drilling

1027 - 24-26' screen - screening of water sands are not heavy / 3 ppm @ screen / 0 ppm at BH + BZ / Explo: ok, Minerals ok.

1035 - ~~26-28' screen~~ / Putting more augers on - 10' to station

1047 - ~~26-28'~~ 28-30' screen - 0 ppm / Drilling: Explo ok, Minerals: ok / HNu: 0 ppm BZ + BH

— BEC —

1103 - Down to 31' by auger / take 31-33 screen 0 ppm BH + BZ / Explo: ok, Minerals = ok

1109 - Down to 33' by auger / .2-.4 ppm BH, 0 ppm @ BZ / Explo: ok, Minerals: ok

1116 - 35' by auger / 0 ppm BH + BZ / Explo, Minerals

1121 - 37' by auger / .4 ppm BH, 0 BZ / Explo, Minerals
went back in to go to 38 to be consistent with geologist log / strong sulfur odor, but 0 ppm at the BH until right at bottom, where .4 to 1 ppm at BH, but 0 BZ

1139 - 40' by auger / .2-.4 ppm at BH, 0 at BZ / Explo ok / Minerals ok.

1145 - 42' by auger / .2-.4 ppm at BH, 0 at BZ / Explo ok / Minerals ok

1153 - 44' by auger / 0-.2 ppm at BH, 0 at BZ / Explo ok, Minerals ok.

1201 - 46' by auger / 0-.6 ppm at BH, 0 at BZ Explo ok, Minerals ok.

1205 - 48' by auger / 0 ppm - .4 ppm BH, 0 at BZ Explo ok / Minerals ok.

1212 - Lunch break by Drillers.

— BEC —

1307 - Drilling resumes / taking 48-50 spoon 1st.

1313 - 50' by augers / Oppm BZ + BH / Explo = 22 5% O_2, 0% LEL / Minirad = ok

1322 - 52' by augers / Oppm BZ, .2 BH / Explo = ok, Minirad: ok.

1333 - 54' by auger / Oppm BZ + BH / Explo = ok Minirad: ok.

1340 - 56' by auger / Oppm BZ + BH / Explo = ok, Minirad: Ok.

1354 - 58' by auger / Oppm BZ + BH / Explo = ok, Minirad (on cuttings) ok.

1400 - 60' by auger / Oppm BH + BZ / Explo, Minirad ok

1410 - 62' by auger / Oppm BZ, .4 inside augers / Explo, Minirad ok.

1425 - 64' by augers / Oppm BZ + BH inside augers Explo, Minirad OK.

1440 - 66' by augers / Oppm BZ + BH inside augers: Explo, Mini, OK.

1446 - 68' by augers / Oppm BZ and inside auger Explo, Mini ok.

— BEC —

Well Construction: A thin clay lense (2") was encountered at 48. Additionally, we encountered good clay @ 56', and it ~~was~~ lasted to 62'. I (Callaway) decided to place the well at least 10' below Base of clay. This will allow for 5' of screen, 7' of sand, 2.5 of bentonite for seal below clay. ∴ I told driller to TD at ~ 72-73 feet, leaving 2' above ground for well finish.

1755 - Rig is stalling and auger rotary is locking up / Driller has Canterra rep on site to troubleshoot / Job shut down while rig is worked on.

17 - Apparently one of hydraulic pumps on head is not functioning properly - Repairs to hydraulic line to it being conducted / Still hope to finish deep well today

1820 - Rig ready to roll again /

1825 - 70' w/ auger / Oppm BZ + inside augers / Explosimeter battery low / Minirad on cuttings OK.

1836 - 72' w/ augers / .6 ppm BH, Oppm BZ / Minirad OK.

— RTC —

1930 - Dark - Caldwell shuts job down / leaving hole w/ augers in - Sand has heaved up inside string to 60' BLS - will have to bail out tomorrow.

1931 - E+E off site

BEC

Justin's Hours M | T 11 | W 12 | Th | F

5 April 90 - Clear, warm, South wind
E+E: Caldwell (Team Leader) Stoneland (SSO)

0900 - E+E and Thomason Drilling on site - Thomason: M. Kelly, M. Sawyer, J. Williamson

0900 - Drillers stabilizing site, preparing to bail hole out and keep hole clean to set casing in / Deconned bailer

0930 - Began bailing / was taking too long / scrapped the idea / will pull the auger string out 10 and see if the sand comes out of the bag. If it does, we will put a clean out b through the inside of the string, and try to keep the hole clean in that manner.

1000 - This method did not work / Now the plan is to pull the auger string out, use a wooden plug in the lead auger, drill back down, and when the casing is in punch the plug out.

1045 - Augers out of hole - Lead auger has 3 feet of shelly clay lodged in bottom - ∴ we likely hit this from 72 - 73 or so - will probably set well at 70' or 71

1105 - Wooden, untreated plug set in lead auger; Running augers back into hole now.

BEC

1215 - Down to 50'; ran 1.5 inch galvanized into hole to see how far sand may have risen inside string - ~3' inside - this is probably fine sand which is coming in from the auger joints. Caldwell felt that 3' was not enough to worry about, and we kept going back into hole w/ augers.

1255 - Down to 70' w/ augers / Driller felt clay at 70' / Caldwell stopped there; begin to install well casing + screen

1310 - Well casing + screen only down to 50'. We have tried all ways - now the only thing to do is "wash" it down to depth - begin pulling out of hole / we will have to dig a viscerene-lined pit to contain discharge + then pump out of the pit to the surge vault for new effluent.

1320 - Break for lunch

1400 - Begin digging a trench + hole for water, which will come out during washing / J. Strickland to warehouse for McCullough pump to pump from pit to discharge vault.

BEC

1450 - 1.5 inch Tremie washed down to 73'. (T.O.A.) - discharge came around borehole annulus - HNu = 0ppm; discharge directed to pit, where Caldwell + Strickland pumped it to sludge vault - Total volume down hole appears to be captured - appr 50 gals.

1700 Went back in w/ csg - only went in to 55' - Begin to put tremie line ins. augers to wash csg down.

1600 70' csg (BLS) in w/ gravel pack to 64' BLS, Bentonite seal to 62' BLS. Driller going for H_2O for grout.

1700 Strickland + Caldwell - site stabilization by E+E / Driller returns w/ H_2O.

2000 - Grout job completed; hole dug 4x2x2 for remaining grout, which was emptied there - it was mixed w/ clean water + so Caldwell saw no contamination problem

2015 E+E and Thompson off-site.

BEC

6 April 90. Cloudy, rain predicted, S wind
E&E. J Strickland, B. Caldwell

0930 - E&E on-site, Drillers already present / site stabilization + clean up + decon of augers. Ware PED-1 spudded, ~ 68' BLS TD.

1000 Mark Kelly & B. Caldwell off-site to get drums

1045 J. Amy (TWD) begins decon of rig while Mike cleans up + cleans soil cuttings

1100 Crew begins to decon augers

1130 Caldwell + Amy (Drillers) back on site

1130 - Decon + site stabilization
1400

1400 - Set rig up on PC1-1

1410 - Spud in / Caldwell calibrates HNu + Explo.

1423 - Down to 16' BLS / HNu = 0ppm, Explo = 22% o, 0% LEL, Mineral ok

1435 - Down to 31' BLS / HNu = 0ppm BZ 0 - .4ppm Cuttings, 0ppm Borehole / Explo = ok, Mineral = ok

1450 - Down to 41' BLS / HNu = 1ppm = 2ppm at BH = .2 - .4 BZ / Explo ok Mineral ok

1508 - Down to 46' BLS / HNu = 1ppm BH 0 - .4ppm BZ - Everyone ok w/ strong breeze blowing out of S

— BEC —

Mineral ok, Explo ok. / There is ~ 8' of sand in hole, were the a plug was used in auger base. Drillers are going to flush the sand out w/ clean water into a berm pit at rig, where it will be pumped into discharge vault.

1530 - All discharge was contained + pumped into effluent system /

1615 - Well installed at 45' BLS, Sand pack to 39' BLS; Hole plug at 37' BLS

1640 Kelly & Caldwell off-site to get more concrete. Weather condition is overcast @ 65-70°F w/ 5-7mph wind blowing from the south. Looks like a good chance of rain

1705 Kelly & Caldwell on-site w/ concrete. Crew prepares to mix grout.

1720 Crew pumping grout

1722 Mixing 2nd batch of grout. Caldwell picks up HNu, Explosimeter, and Mini Rae and returns them to the van

1722 - Mono pump on rig is malfunctioning -

1922 Crew tries another rig pump - problem appears to be w/ suction portion / Crew tries another suction hose / If this doesn't work, will mix grout by hand.

— BEC —

1:14

~~0830~~ 20 - Obstruction in suction line finally cleared; Begin to mix grout for PCI-1

21 ~~0900~~ - PCI-1 grouted up. (~16 bags)

21 ~~0900~~ - Site stabilization + clean up
21 ~~0930~~ For well-end/every item was placed inside hot line except spare PVC csg/well cuttings were piled on visqueue + then covered w/ another layer.

2130 - E+E off-site, Thomson ~ 1 minute behind us.

2132 - Thomson Drillers off site.

BEC

4-9-90 NASP

0900 E+E + Drill Crew on-site; Drill Crew begins stabilization of site + prepares to decon Augers + drilling equipment

0930 Caldwell + Kelly → (Driller) off-site to get more drums; Jimmy + Mike (Drill crew) cleans up dirt + decons ~~augers~~ augers

1030 - Caldwell + Kelly back on-site / Crew
1100 drums remainder of PCI-1 cuttings

1100 - Rig set-up on PCS-1 / Install plug on
1130 end of auger.

1130 - Stabilizing site / Put 15' of auger stri
1200 up, ready to drill / Lunch break

1200 - Spud in @ 1210 / Hole down to 20' BL
1230 by 1218; Oppm HNu BZ + BH; Explo = OK and LEL (22.5% O_2, 0% LEL) / SJ sand pack to 14' BLS

1230 - Bentonite seal to 12' BLS / Grout
1300 mixed + tremied in / Begin pulling augers out

1300 - Well grouted to surface / J. Strickland
1330 leaves site, unloads safety equipment and supplies to B. Caldwell

— BEC —

1330 - Drillers steam-cleaning equipment.
1400 Caldwell discusses rest of day w/ M. Kelly: Drillers will clean up site of their equipment + leave site strung-up w/ a caution line; they will leave PCS-1 cuttings covered w/ plastic and will drum them tomorrow. They will do development w/ PCD-1, and will take + record a final stable pH, cond. + temp. Tomorrow, they will develop PCI-1 and PCS-1 and do surface completion. Caldwell is going to leave site ~~of drillers~~ to return to site, as no hazards or responsibility of team leader is necessary. Drillers have responsibility + notification to call Caldwell in office if they need him.

1400 - Caldwell decided not to leave development w/ the drillers. Will return tomorrow to develop + remove drums, and on Wednesday will finish surface completion.

1410. Caldwell off-site; Drillers remain to clean up water truck + rig and get them off-site.

— BEC —

10 April 90 - Cloudy, S wind, humid
E+E: B. Caldwell
Thomson: J. Williamson

0900 - E+E and Thomson on-site / Thom
0910 brought 2 barrels / barrels filled w/ waste cuttings from PCS-1 / Decon plastic put into barrel.
0930 - Barrels labeled by E+E / Tops secured /
1000 Thomson + EE securing site by m clean-up.

1000 - Begin development of PCD-1 at 1030. Water
1030 cleared up 25 mins after pumping start. Discharge 3.5 g/30 secs. ~~[illegible]~~

Time	1108	1128	1148	1158	1208
pH	6.7	6.2	6.1	5.8	5.8
Cond	980	980	1000	990	1000
Temp	25	25	25	25	25
Comments	clear	clear	clear	clear	clear

Water level drew down to ~ 48' T.O. at first, then came back up as dev. p cd.

1200 - Turned pump off 1210; let well recover
1230 5 MINS - then pumped at 7 g/m for 5 MINS - PD: 13.57 T.O.C. / Pulled pump + steam cleaned it + hos Put pump into PCS-1 and began development at 1230.

— BEC —

1230 - NAS Environmental shows up for
1300 drums - We began loading them.

1300 - Continue loading drums
1330 1330. PCI-1 - pH 6.4
cond.: 420 - discharge 3.5g/27secs

1330 - Continue loading drums - total
1400 27 drums loaded and off site by 1345.

Time	1355	1405
pH	6.6	6.6
Cond	360	370
Temp	24	24
Comments	clear	clear

1400 Development terminated 1405.
1430 Stopped pump for 5 mins, then discharged for 5 mins at 7g/m. DD = 13.74 T.O.C. / Steam cleaned pump + started PCI-1 development at 1415.

1430 - Development of PCI-1 continues / water
1500 smells of organics very strong + leaves an oily sheen on liquid surface in discharge vault. Discharge = 3.5g / 26 secs
1445: pH: 6.5 Cond: 2,200 Temp = 26

BEC

1500 - Time 1500 1505 1515 1525
1530 pH 6.4 6.4 6.8 6.8
cond. 2,200 2,400 2,400 2,400
temp 25 25 25 25
comments cloudy yellow cloudy clear clear

Dev. terminated at 1525. Spacey fast
DD (5 mins) = 14.9 T.O.C (std. ~7)

1530 - 5.6 stabilization /
1600 E+E + Thomson off-site at

BEC

11 April Clear, cool, N wind
E+E: B Caldwell
Thomason: M. Kelly & J. Thomas Williams

0930 - E+E on site, Thomason already there prepping for surface finish.

0930 - PCB-1 - 8.48 T.O.C.
1000 PCS-1 - 9.60 T.O.C.
PCI-1 - 9.50 T.O.C

1000 Caldwell bags trash + takes
1030 to Haz Waste Facility / parks up hose.

1030 - Caldwell cks. w/ drillers - everything
1100 ok w/ finish - they will call when almost done.
Caldwell off-site at 1045

ATTACHMENT D

FLORIDA **PROPBSSIONAL**

GEOLOGIST **SEAL**

FLORIDA PROFESSIONAL GEOLOGIST SEAL

I hereby affix my seal to the Groundwater Monitoring Well Completion Report for the Industrial Wastewater Treatment Plant, Naval Air Station, Pensacola, Florida, in accordance with Chapter 492 of the Florida Statutes and applicable rules and regulations developed pursuant thereto:

Name:	John D. Barksdale
License Number:	P.G. No. 1150
State:	Florida
Expiration Date:	July 31, 1992

John D. Barksdale

John D. Barksdale

6-28-91

Date

DESIGN COORDINATION AND REVIEW - COMMENTS
SOUTHNAVFACENGCOM 11012-24 (8/78)

JOB ORDER NUMBER

COMMENTS BY	CODE	PHONE	DATE
Suzanne O. Sanborn	18211	803-743-0574	June 10, 1991

PROJECT TITLE AND LOCATION
Groundwater Monitoring Well Completion Report, April 9, 1990
IWTP
NAS Pensacola, Florida.

TYPE OF REVIEW	
	30%
	100%
	FINAL
X	OTHER

DWG. NO. OR PAR. NO.	COMMENTS (Make general comments after specific comments)	REVIEW ACTION (& reasons where significant)
	- Please provide Final - w/ signature	Final report has
	- I only have a Draft	Professional Geologist
	- I have reviewed & no comment.	seal + signature.
	- If you received no comments earlier -	
	sorry for the wait	
		John D. Bachrach 6-25-91
	Suzanne O. Sanborn 6/10/91	
	- Draft Outstanding Documents to provide comments:	
	- Appendix IX = May 1991 Volume 1 + Volume 2	
	- Draft Data Management Plan for Contamination Assessment / Remedial Activities Investigation.	

SHEET 1 OF 1 SHEETS