32501.002
03.04.02.0005
N00204.AR.000542
NAS PENSACOLA
5090.3a

COMPREHENSIVE LONG-TER ENVIRONMENTAL ACTION FINAL SAMPLING AND ANALYSIS PLAN FOR SITE 2 — WATERFRONT SEDIMENTS NAVAL AIR STATION PENSACOLA, FLORIDA

SOUTHDIV-CONTRACT NUMBER:
N62467-89-D-0318
CTO-058

Prepared for:
COMPREHENSIVE LONG-TERM
ENVIRONMENTAL ACTION NAVY (CLEAN)
NAVAL SUPPORT ACTIVITY
NAVAL AIR STATION
PENSACOLA, FLORIDA

Prepared by:
ENSAFE/ALLEN & HOSHALL
5724 Summer Trees Drive
Memphis, Tennessee 38134
(901) 372-7962

May 1993

Release of this document requires the prior notification of the Commanding Officer of the Naval Air Station, Pensacola, Florida.

Table of Contents

1.0 INTRODUCTION 1

2.0 BACKGROUND INFORMATION 3
- 2.1 Site Description 3
- 2.2 Site History 3
- 2.3 Physical Setting 5

3.0 PHYSICALSURVEY 6

4.0 FIELDSAMPLINGPLAN 7
- 4.1 Sampling Objective 14
- 4.2 General Sampling Requirements 15
- 4.3 Sample Processing 15
- 4.4 Collection of Auxiliary Data 15
- 4.5 Specific Sampling Procedures 16
- 4.6 Decontamination 20
- 4.7 Sample Management 21
- 4.8 Sample Custody 21
- 4.9 Investigation Derived Wastes 21
- 4.10 Quality Assurance/Quality Control 21

5.0 ANALYSIS 22
- 5.1 **Field** Measurements 22
- 5.2 Laboratory Analysis 22

6.0 QUALITY **ASSURANCE** PLAN 23

7.0 DATA MANAGEMENT PLAN 24

8.0 REFERENCES 25

9.0 FLORIDA PROFESSIONAL GEOLOGIST SEAL 27

List of Figures

Figure 2-1 Site Location Map 4
Figure 4-1 Sample Locations 12

List of Tables

Table 4-1 Site 2 RI Sampling and Analytical Requirements 8

List of Appendices

Appendix A Hydrolab Data Sonde Surveyor Operating Procedures
Appendix B Surface Water Sampling Procedures
Appendix C Sediment Sampling Procedures
Appendix D Biota Sampling Procedures
Appendix E Niskin Winged Current Meter Operating Procedures

1.0 INTRODUCTION

As part of the U.S. Navy Comprehensive Long-Term Environmental Action Navy (CLEAN) Program, a Remedial Investigation/Feasibility Study (RI/FS) will be completed by EnSafe/Allen & Hoshall (E/A&H) at Site 2 — Waterfront Sediment Site, located at the Naval Air Station Pensacola (NASP), Pensacola Florida. This Sampling and Analysis Plan **(SAP)** has been developed by E/A&H for the RI/FS, as tasked by the Southern Division, **U.S.** Navy, Naval Facilities Engineering Command (SOUTHDIV) under Contract Number N62467-89-D-0318/058.

Primary references for this **SAP** include [the Remedial Investigation/Feasibility Study Comprehensive Sampling and Analysis Plan **(CSAP)** for Naval Air Station Pensacola (E/A&H, 1993)], the EPA Region IV *Standard Operating Procedures and Quality Assurance Manual* (SOPIQAM), and the *Contamination Assessment/Remedial Activities Investigation* Work *Plan-Group C* (Site *2)* completed by Ecology & Environment (E&E), Inc. (E&E 1992a). References should accompany this document during review or use. The investigation of Site 2 will be completed to fulfill requirements set forth in the work plan and **SAP,** and in accordance with the SOP/QAM.

The Site 2 RI will assess the nature and magnitude of contamination identified during an investigation previously conducted by E&E as Phase I of the Site 2 — Group C **Work** Plan. The results of the previous investigation are contained in a report entitled *Interim Data Report (IDR), Contamination Assessment/Remedial Investigation, Waterfront Sediments (Site* **2),** *Naval Air Station Pensacola, Pensacola, Florida,* (E&E 1991). Proposed activities for the RI have taken into consideration all previous investigations at Site 2, including the Phase I.

Field activities to be performed during the RI will include the collection of in-situ surface water quality data, hydrologic data, and surface water, sediment, groundwater, and biota samples.

[Bold items enclosed in brackets denote changes to last version of document.]

Chemical analyses will be completed by a **[laboratory that is approved by the the Naval Energy and Environmental Support Activity (NEESA)]** using Contract Laboratory Program (CLP) **[protocol.]** Field sampling, analytical methods, and reporting will be conducted at **EPA** Level IV protocol.

Upon completion of the investigative work and laboratory analysis, an RI report **will** be submitted to SOUTHDIV summarizing the activities, results, and conclusions **of** the investigation. The report will provide the basis for an **FS [and a baseline risk assessment (BRA)]** to be completed at the site.

This **SAP** will provide guidelines for sampling and analytical techniques to be used during the RI and outline proper documentation procedures for the investigation.

[Bold items enclosed in brackets denote changes to last version of document.]

2.0 BACKGROUND INFORMATION

2.1 Site Description

Site 2 is located on the southeastern shoreline of NASP, along the Pensacola Bay waterfront. The location of Site 2 is shown on Figure 2-1. This site is the area of nearshore sediments along the southeast **NASP** waterfront, where numerous sewer outfalls exist. The southeast waterfront is dominated **by** a protective seawall containing numerous seaplane ramps, with large adjacent paved parking aprons. The seawall is approximately 3 to **4** feet high, and rests on a concrete platform. Fifty-six outfalls, ranging in diameter from 1 to 42 inches, were previously identified along the seawall (E&E 1991). The seawall also accommodates numerous scuppers to allow drainage of surface water from the adjacent parking areas. The waterfront outfalls begin near the McDonald's Restaurant, and extend east to the dock for the **USS** Forrestal. Many of the outfalls within this area discharged untreated industrial wastes into Pensacola Bay from approximately 1935 to 1973, when NASP's industrial waste stream was diverted to the Industrial Wastewater Treatment Plant (IWTP) (E&E 1991, 1992a/b).

[Previous studies have described the bay sediments to be fine sands to a water depth of 30 feet and silty sands and muds from a depth of 30 feet to the deepest parts of the ship channel (E&E, 1992a). However, few sediment samples have been collected in the immediate area at Site 2.]

2.2 Site History

A discussion of the historical setting of Site 2 is contained in Section **3 of** the associated work plan for this site (E&E 1992a). This section chronicles the history of previous site activities and investigations as they relate to the existence of known or suspected site contaminants. Additionally, the Site 2 interim data report (IDR) fully discusses the findings of **E&E**'s 1991 Phase I investigation conducted at Site 2 (E&E 1991).

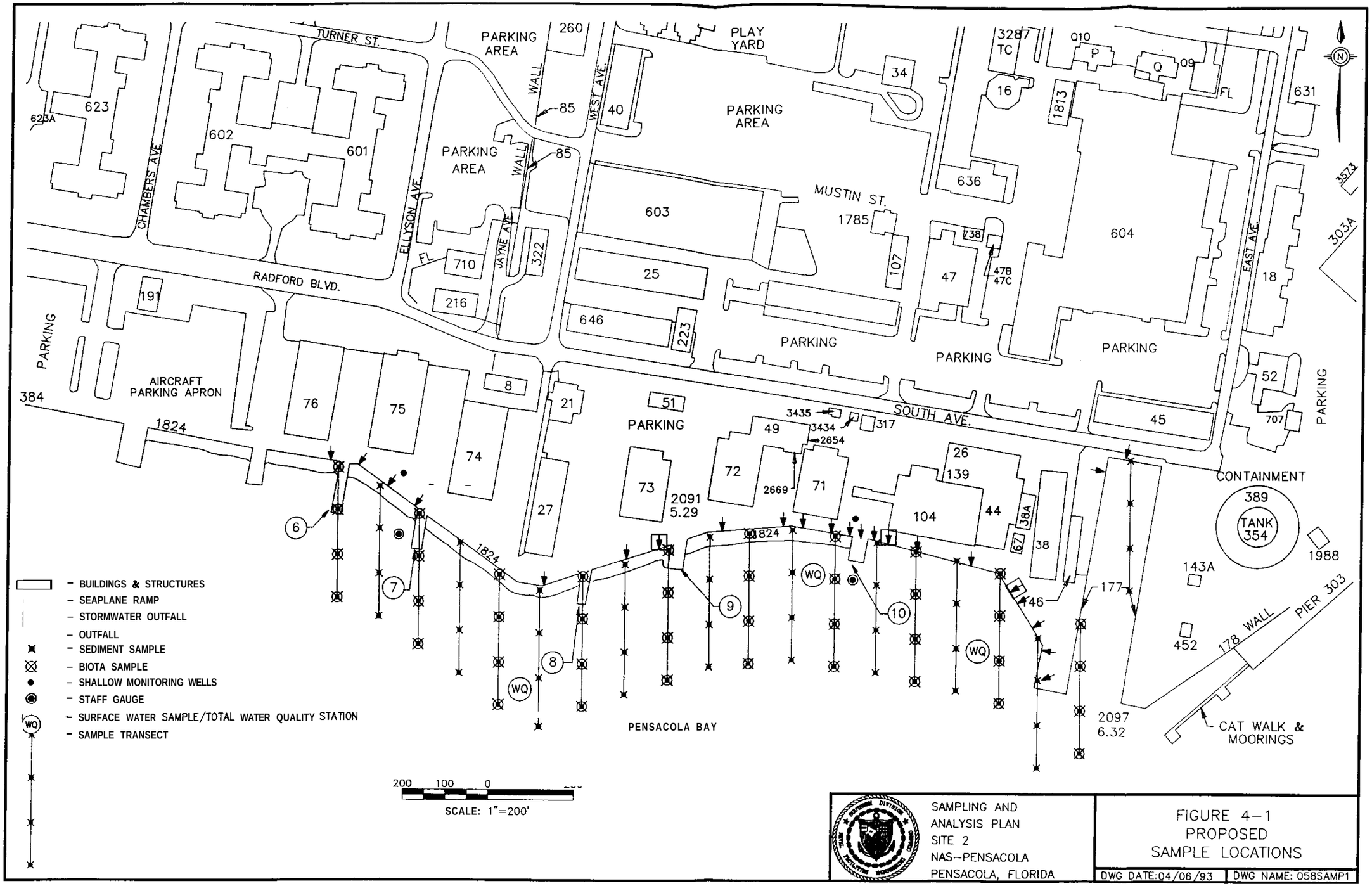

SAMPLING AND ANALYSIS PLAN
SITE 2
NAS-PENSACOLA
PENSACOLA, FLORIDA

FIGURE 4-1
PROPOSED SAMPLE LOCATIONS

DWG DATE:04/06/93 | DWG NAME: 058SAMP1

2.3 Physical Setting

Climatology, biological resources, surface water hydrology, physiography, and hydrogeology for **NASP** are contained in Sections **4** through 7 of the Site **2 work** plan (E&E 1992).

3.0 PHYSICAL SURVEY

Various physical surveys have been conducted at Site 2 as part of E&E's Phase I activities. Results of the physical surveys for Site 2 can be found in Section 3 of the IDR (E&E 1991). Relevant information from these surveys has been taken into account during the planning of this RI. The Phase I surveys will not be duplicated during the RI.

Contaminant Source Survey

A contaminant source survey will be performed at Site 2 as outlined in Section 14.2.1 of the Site 2 work plan (E&E 1992a).

4.0 FIELD SAMPLING PLAN

Several modifications to the investigative approach outlined in the approved Site **2** work plan are proposed for this RI. These modifications have been made to:

- Focus the investigative effort on the areas of the site which exhibited significant contaminant levels during the Phase I screening investigation.

- Provide additional information about ambient conditions for Pensacola Bay in the vicinity of NASP. Examples include water quality parameters/current velocity information.

- Develop an investigative approach similar to the approach proposed for the assessment of Site **42** — Pensacola Bay (E/A&H 1992b).

A similar investigative approach will be used for Sites **2** and 42 **so** that comparable **data** *can* be obtained, and the two investigations can be appropriately integrated to fully and adequately cover the study areas. Procedures to be implemented during this investigation, including any modifications to the Site 2 work plan, will be discussed in the following sections.

The objective of the field sampling plan is to outline a feasible means of sample collection for chemical and physical analysis. The field investigation for the Site 2 RI includes the collection of in-situ surface water quality and hydrologic data, and surface water, sediment, groundwater, and biota samples using various techniques. The sampling and analytical requirements for this investigation are summarized in Table 4-1. Note that the numbers of samples shown in parentheses will be analyzed for the analytical parameters indicated.

Table 4-1
Site 2 RI Sampling and Analytical Requirements

Medium	No. of Samples"	Analytical Parameters	[DQO Level]	Comments
Surface Water[b]	38 (3) **[(12)]**	FSA PPW **[TSS]**[f]	[IV]	-1 per sample station **[-1 per sample station at mid-depth per week]**
Sediment"	160 (10)	FSA PPS	[IV]	
Groundwater[d]	2	FSA	[IV]	
Biota"	**[40]**	BA	**[NA]**	-1 per sample station
TOTAL	**[240]** **[(25)]**			

Source: Modified from Ecology and Environment, Inc., 1992

Notes:
a The number of samples shown in parentheses will be analyzed for the additional parameters indicated.
b Number of surface water samples = 3 sample locations at 3 intervals sampled once per week x 4 weeks = 36 samples; 2 staff gauge locations x 1 sample = 2 samples.
c Number of sediment samples = 80 sample locations sampled x 2 depth intervals = 160 samples.
d Number of groundwater samples = 2 temporary monitoring wells x 1 sample = 2 samples.
e Number of biota samples = **[40]** sample locations x 1 grab sample per location = 80 samples.
f Number of surface water samples collected at mid-depth = 3 locations sampled once per week x 4 weeks = 12 samples.
[NA = Not applicable]

Analytical Parameters
Full Scan of Analysis (FSA) = TCL VOCs; TCL base-neutrallacid extractable organic compounds (BNAs); TCL pesticides and polychlorinated biphenyls (PCBs); TAL metals (total [i.e., unfilteredl, water only); and TCL cyanide.

Physical Parameters
Water (PPW) = 5-day biological oxygen demand (BOD), chemical oxygen demand (COD), hardness, total suspended solids, alkalinity, total phosphorus, nitrate-N, total Kjeldahl nitrogen (TKN), and heterotrophic plate count.

[Sediment] (PPS) = Total phosphorus, nitrate-N, TKN, heterotrophic plate count, total organic carbon, cation exchange capacity, bulk density, particle size, percent moisture, and specific gravity.

Biota (BA) = Biological analysis of sediment samples identifying macroinfauna present to the genus level.

[TSS = Total Suspended **Solids]**

[Bold items enclosed in brackets denote changes to last version of document.]

The EPA Contract Laboratory Program (CLP), Target Analyte List (TAL), and Target Compound List (TCL) will be used to provide a legally defensible full spectrum of contaminant analysis.

Organization of analyses has been changed from the work plan in which they were subdivided into "Suites" A through E. This SAP has organized analytical parameters into the four basic subdivisions listed below.

[Organization of Analytical Parameters:]

- Full **Scan of Analysis (FSA)** — These analyses will be performed on all sediment, groundwater, and surface water samples collected for chemical analysis. **A** full **scan** consists of analysis for TCL VOCs, BNAs, PCBs, pesticides, cyanide, and TAL metals (unfiltered).

- **Physical Parameters, Water (PPW)** — These analyses will be performed on **[three]** surface water samples collected **[across]** the site **and** will be used to determine the physical characteristics of Pensacola Bay surface water in the **NASP** vicinity[, **and for completion of the FS].** The parameters include 5-day biological oxygen demand (BOD), chemical oxygen demand (COD), hardness, **[total]** suspended **solids,** alkalinity, total phosphorus, nitrate-N, total Kjeldahl nitrogen (TKN), and heterotrophic plate count. Samples for these analyses will be collected at the same time and in addition to the samples collected for the FSA analyses. The **PPW** samples will be intended to generally represent the physical conditions of surface water at the site.

- **Physical Parameters, Sediment (PPS)** — These analyses will be performed on only a portion of the sediment samples collected at the site and will be used to determine the

physical characteristics of the sediments located within Site 2, and for completion of the FS]. The parameters include total phosphorus, nitrate-N, **TKN,** heterotrophic plate count, total organic carbon (TOC), cation exchange capacity, bulk density, particle size, percent moisture, and specific gravity. Samples for these analyses will be collected at the same time and in addition to the samples collected for the FSA analyses. [A preliminary reconnaissance at Site 2 will be performed to determine the variation in sediment type across the area. Sediment types will be described by visual analysis of a bottom grab sample using the Unified Soil Classification System. Based on the visual sediment analysis, PPS samples will be collected that are representative of the area, sediment types present, and water depths across Site 2. PPS parameters will be correlated with the visual sediment analysis.] Areas of likely contamination **will** be specifically targeted.

- Physical Parameters, Biota (BA) — These analyses **will** be performed on grab samples collected for biological analysis and will be **used** to determine the biological characteristics of the sediments located within Site 2 including the diversity and distribution **of** macroinfauna, as well as the presence or absence of pollution indicator species. Samples for these analyses will be collected at the same time as the sediment analyses. The locations for the **BA** samples will be chosen to represent the biotic condition of sediments at the site. Areas of likely contamination will be specifically targeted.

Changes in the proposed analyses have been made to address **CERCLA** requirements rather than RCRA requirements (i.e., the omission of Appendix **IX** analysis), to acquire additional information regarding the physical/biological characteristics for the feasibility study, and for simplification. Therefore, certain parameters have been omitted from this *SAP* because they are either redundant to the comprehensive TAL/TCL analytical methods or provide information that **is** either not legally defensible or of limited use.

Rationale for Sampling Approach:

Proposed sample locations are presented on Figure 4-1 for Site **2** (see Section 4 discussion of sample transect establishment). This sampling approach has been selected for three reasons:

- This approach is compatible with the sampling approach selected for the Site **42** (Pensacola Bay) investigation.

- This approach provides comprehensive and focused coverage of the eastern waterfront area where sediments were found to contain relatively elevated concentrations of metals, TRPHs, and PAHs during E&E's Phase I study (E&E 1991).

- This approach provides for defined incremental coverage of the study area. It should be noted that the northern, eastern, and westernmost extents of Site 2 have been omitted from the sampling approach to focus the scope of this investigation. These remaining areas **will** be addressed during the more expansive investigation of Pensacola Bay [(Site 42)].

[FSA analysis will be performed on water samples collected from surface water stations, staff gauge stations, and shallow monitoring wells. Sediment samples from specific stations representative of water depth and sediment type across the area will also be subjected to FSA analysis.] At Site 2, 200 samples are currently projected for **FSA** analysis. Table 4-1 summarizes analysis for each media and sample type.

FSA parameter analysis will be conducted on surface water samples collected from three sampling locations (see Figure **4-** 1). Surface water samples will be collected from [an estimated three] discrete depths at each sampling location once a week for four weeks, yielding [an]

[Bold items enclosed in brackets denote changes to last version of document.]

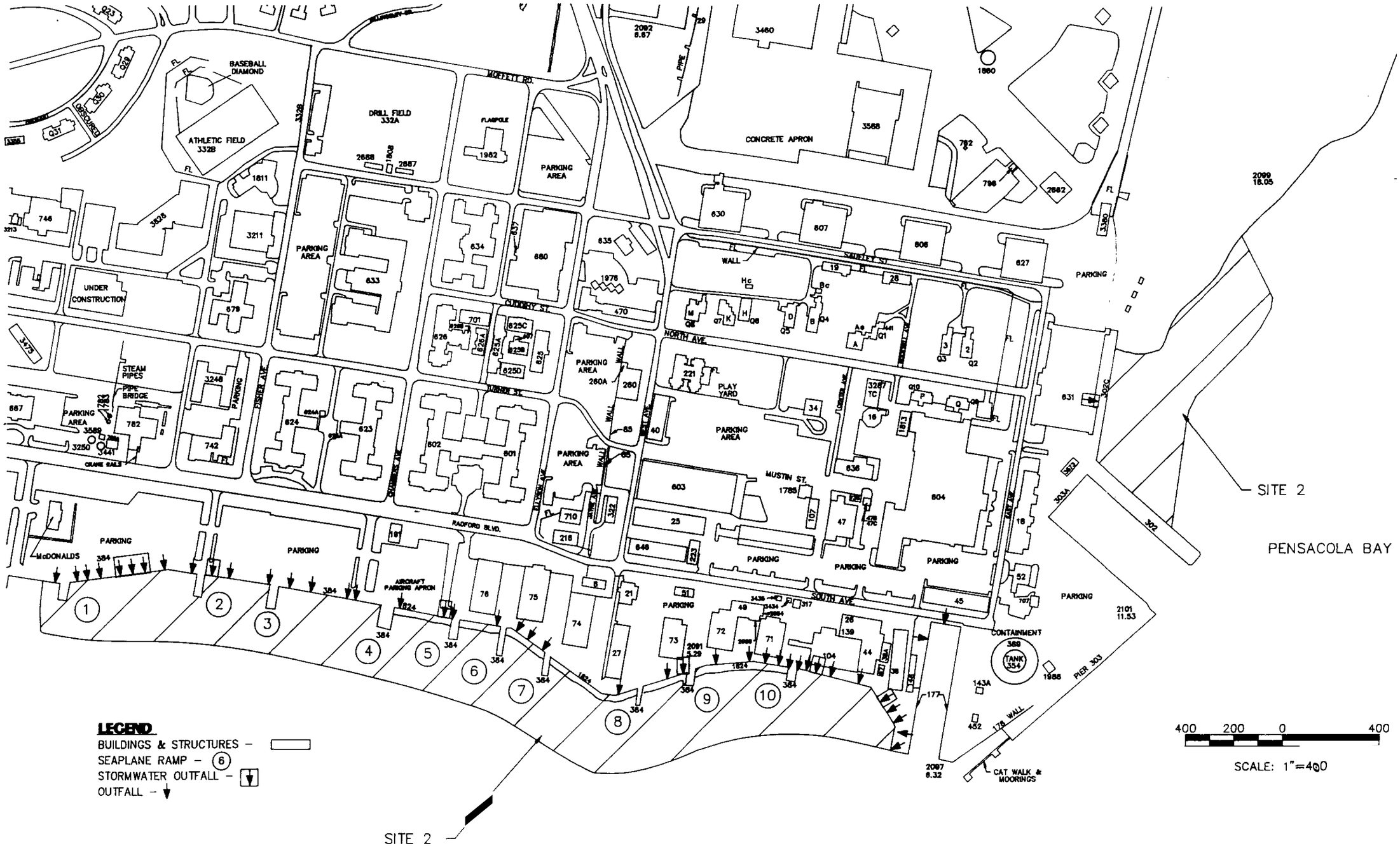

SAMPLING AND ANALYSIS PLAN
SITE 2
NAS–PENSACOLA
PENSACOLA, FLORIDA

FIGURE 2–1
SITE LOCATION

[estimated] 36 water samples. Two staff gauge samples will also be collected at two additional locations yielding a total of **38** surface water samples for **FSA** analysis.

PPW parameter analysis will also be conducted on three of the [estimated] 36 surface water samples collected. [One PPW sample will be collected at mid-depth from each of the three sample locations. In addition, total suspended solid samples will be collected at mid-depth from each sample location once a week for four weeks yielding a total of **12** samples.]

[FSA parameter analysis will be conducted on sediment samples collected from sampling locations representative of sediment type and water depth. To maintain adequate coverage of the proposed study area, a minimum of 40 stations will be visited independent of these two parameters. Additional samples may be collected to represent the various sediment types and water depths in the area. A maximum of 80 sampling locations will be visited (see Figure 4-1).] Two depth intervals will be sampled at each sample location, yielding a [maximum] of 160 sediment samples for **FSA** analysis. *See* Section **4.5.2** for sediment sampling procedures.

[PPS parameter analysis will be conducted only on a portion of the sediment samples. **The** specific location and depths for the PPS samples will be based on sediment type, water depth, and location within the study area. At least 10 samples will be collected; however, additional samples may be collected based on site observations so that field personnel can identify locations that are most representative of site conditions, including areas of contamination.]

FSA parameter analysis will be conducted on groundwater samples collected from the two temporary monitoring well locations.

BA parameter analysis will be conducted on biota samples collected from the **[40 biota]** sampling locations. Representative biota will be identified to the genus level. *See* Section 4.5.3 for biota sampling procedures.

[The westernmost transect will serve as a control transect for the proposed study area. It is located in an area where few outfalls exist and where previous investigations indicated contamination was relatively low (E&E 1991).]

4.1 Sampling Objective

The Site 2 RI will focus on the eastern waterfront area, based on the detection of contaminants during E&E's Phase I investigation (E&E 1991). The first objective is to determine the **[extent]** of contamination of the nearshore sediments in the eastern waterfront area. To accomplish this objective, extensive sediment sampling is planned for this RI. The second objective is to characterize the surface water quality and the hydrologic conditions across the eastern waterfront area. Field activities to achieve this objective include a combination **of** means:

- Total Water Quality (TWQ) stations will be established in the nearshore environment of the eastern waterfront area. These stations will be used to continuously monitor the physical water quality in the area. The TWQ stations will also be used to collect hydrologic data in the form of current velocit**[ies and]** physical water quality parameters.

- **[Auxiliary]** water quality parameters will also be evaluated during the sediment and biota survey. During sediment/biota sampling activities, multi-depth in-situ water quality parameters will be measured at each **[FSA and biota]** sampling location. This data will be used to assess the ambient water quality across the sampling area.

- Surface water sampling will be conducted at each TWQ station for chemical and physical parameter analysis.

The third sampling objective is to determine the biological impact **of** contamination in the eastern nearshore area. To accomplish this objective, field activities will focus on studying the diversity and distribution of the benthic macroinfauna of the investigated area.

The procedural approach to each field activity **is** discussed in Sections **4.2** through 4.10 **of** this *SAP*.

4.2 General Sampling Requirements

General sampling requirements applicable to the Site **2** RI during surface water and sediment sampling activities are in accordance with those presented in Section **[2.2 of the *CSAP.*]**

4.3 Sample Processing

Sample processing guidelines to be followed during the Site **2** RI are in accordance **with** those described in Section **[12 of the CSAP.]**

4.4 Collection of Auxiliary Data

Auxiliary water quality data relative to particular sampling locations will be collected in conjunction with specific sampling activities. *See* Section 4.5.2 for sediment sampling procedures. Auxiliary data will include the following physical surface water parameters: (1) temperature, (2) pH, **(3)** oxidation-reduction (REDOX) potential, **(4)** dissolved oxygen **(DO), (4)** specific conductivity, *(5)* salinity, and **(6)** water depth. Additionally, three in-situ TWQ stations will be established across the study area to continuously monitor and record physical surface water parameters with a Hydrolab brand water quality datalogger (DS3) or equivalent

device. [Wind and tide data from the National Oceanic and Atmospheric Administration meteorological station located at NAS Pensacola will be compiled and analyzed.]

[A DS3 datalogger and a current meter will be installed at each TWQ station. These stations will be placed across the site, which is approximately **2000** feet wide.] One station will be placed at each easternmost and westernmost end of the targeted area, at approximately 200 feet offshore. The third station will be located in the center of the targeted area, approximately 100 feet offshore [depending on water depth.]

Auxiliary data will be collected [continuously at **TWQ** stations] for approximately 30 days. The DS3s will be deployed approximately **2** feet from the bottom on the mount stands used to deploy the current meter. These stands rest on the sediment floor, providing support **for** the equipment. The DS3s will be examined and recorded data will be downloaded on a weekly basis during this investigation. [Instruments] will be inspected and repaired or **calibrated as** necessary before redeployment. [The unit will be checked during the **first** week of deployment to discover any problems of biofouling and to determine if the membranes **will** require more frequent changing.] Decontamination procedures will be followed as necessary. Surface water samples will be collected for chemical analysis from the TWQ station locations. ***See*** Section 4.5.1 for surface water sampling [procedures]. Water quality data will be analyzed and used to help characterize the overall surface water quality.

Appendix A details the operating procedures for the **DS3** Hydrolab datalogger.

4.5 Specific Sampling Procedures

All sampling procedures used during the Site 2 investigation will comply with EPA-approved practices outlined in the (SOP/QAM) (EPA 1991). All proposed sampling procedures, as well

as modifications to procedures contained in the Site 2 work plan, will be discussed in the following subsections,

4.5.1 Surface Water Sampling

Surface water sampling will be conducted in accordance with **[procedures outlined in Appendix B].** **As** a modification to the Site 2 work plan, surface water samples will be collected once per week for four weeks from the in-situ [TWQ] stations (Figure 4-1). Based on the water depth and salinity profile, up to three samples may be collected from each sample location per sampling event for chemical analysis. **[Tidal phase will also be recorded in sampling surface waters.]** Table **4**-1 presents the analytical requirements for surface water sampling.

4.5.2 Sediment Sampling

As a modification to the Site 2 work plan, sediment samples will be collected from **an** area approximately 2000 feet **[wide]** along the Site 2 waterfront. Before sampling, a cadastral survey by a qualified surveyor will establish all necessary sampling baselines **and** transects. **A** baseline approximately 2000 feet long will be established east-to-west along the waterfront area. **To** compensate for the irregularity of the coastline while maintaining a uniform sampling approach, due-south trending transects will be established perpendicular to the baseline at 100- foot intervals along the baseline. These transects will be projected to a point which intercepts the coastline **[at mean *sea* level].** **A** transect reference node will be established at that point. **A** location identification marker will be secured at each of the transect nodes for reference.

Sediment samples will be collected from four locations along each transect at specified distances (0 foot, 100 feet, 200 feet, and 300 feet) from the **[transect reference nodes].** At each reference node, a transit or other surveying instrument will be located to properly orient each due-south transect. **A** measuring tape **will** be **used** to locate the distance of each sampling point

along a transect. When the correct sample location has been obtained, appropriate measures will be taken to secure the position (i.e., dropping anchor if in a boat). [The 0-foot sample will be located at the seaward edge of the concrete apron. The distance from the transect node to the 0-foot sample will be recorded.] Figure **4-1** shows the proposed sample transect locations across the waterfront area. All sediment samples will be taken at these locations. Table **4-1** presents the analytical requirement for sediment sampling. Appendix C outlines the sediment sampling procedures.

4.5.3 Biota Sampling

Biota sampling for the Site 2 investigation will focus on sampling benthic macroinfauna along the Site 2 waterfront. [The survey will focus on analysis of benthic grab samples to determine the distribution and diversity of macroinfauna, as well as the presence or absence of the pollution indicator species identified by Collard (1989).] Biota samples will be collected [at each sediment sample station along every other transect.] [Biota] samples will be sieved and analyzed for biotic content, using appropriate diversity and similarity indices. Appendix D outlines the biota sampling procedures.

4.5.4 Hydrologic Assessment

A hydrologic assessment will be performed with the Site 2 RI. As a modification to the Site 2 work plan, E/A&H will use the General Oceanics 6011 Mark II Niskin Winged Current Meter or a similar instrument to record continuous current velocity data of the surface waters surrounding Site 2. These units will be emplaced at the three in-situ TWQ stations, along with the Hydrolab units. Data from the instrument will be collected and downloaded weekly with the data gathered by the Hydrolabs. Appendix E details the operating procedures for the Niskin Winged Current Meter.

4.5.5 Nearshore Environment Assessment

The nearshore groundwater and surface water quality and velocity will be assessed in the nearshore environment using temporary, shallow monitoring wells, **[and]** staff gauges. **[Groundwater and surface water elevations will be measured relative to the top of casing elevation of the temporary monitoring wells. Shallow monitoring wells will be slug tested to determine shallow aquifer characteristics.]**

Staff Gauge Installation — Staff gauges shall be installed approximately 50 feet offshore in Pensacola Bay. The staff gauges and temporary monitoring wells will be installed in a **[north-south]** transect.

Temporary Shallow Monitoring Wells — Temporary monitoring wells will be installed at two locations adjacent to the Pensacola Bay coastline at **[Site 2]**. The placement of the monitoring wells will focus on areas downgradient of **NASP** sites that potentially impact the bay. Specific locations will be selected in the field based on observations (i.e., traffic **areas,** utilities, visible or olfactory evidence of contamination). **[The]** wells will be installed approximately 50 feet **[inland]** from the shoreline.

The temporary shallow monitoring wells will be constructed of 2-inch diameter, stainless steel, 0.010-inch slot width screen flush threaded to 2-inch diameter, stainless steel riser pipe as required. The monitoring wells will be installed to bracket the water table by a licensed Florida well driller using hand augering techniques. Sand pack, bentonite seal, and grout **will** not be used in well construction.

Before sample collection, the monitoring wells will be developed in accordance with **[Section 5.4 of the CSAP.]**

Falling head and rising head slug tests will be conducted at each of the temporary monitoring well locations. The slug tests will be conducted in accordance with Section [9.6 of the CSAP.] Hydraulic conductivity will be calculated using equations provided in Bouwer and Rice (1976) or Cooper et al. (1967). Groundwater velocity will be calculated using a derivation of Darcy's Law:

$$V = \frac{Ki}{n_e}$$

[where:]

K	=	hydraulic conductivity (ft/day)
i	=	hydraulic gradient (ft/ft)
n_e	=	effective porosity

Water Level Measurements — At each temporary monitoring well and staff gauge location, a data logger and barometric probe will be installed for measurement of water levels at regular intervals over a 24-hour period. The data logger will be stored in a locked container to prevent vandalism. The water level data will be used for determination of groundwater flow direction and calculation of hydraulic gradient and groundwater flow velocity.

4.5.6 Engineering Survey

An engineering survey will be performed at Site 2 similar to the one described in Section [3.4 of the CSAP.]

4.6 Decontamination

Decontamination procedures to be followed during the Site 2 RI are described in Section [11.0 of the CSAP.]

4.7 Sample Management

Sample management procedures to be followed during the Site 2 RI are described in Section [12.0 of the CSAP.]

4.8 Sample Custody

Sample custody procedures to be followed during the Site 2 RI are described in Section **[12.4** of the CSAP.]

4.9 Investigation Derived Wastes

Procedures to be followed for handling investigation derived wastes are described in Section [13.0 of the CSAP.]

4.10 Quality Assurance/Quality Control

Quality assurance/quality control (QA/QC) samples will be collected in accordance with the frequency presented in [Table **15.1** of the ***CSAP.]*** QA/QC procedures to be followed **during** the investigation are described in Sections **[14** and **15** of the ***CSAP.]***

[Bold items enclosed in brackets denote changes to last version of document.]

5.0 ANALYSIS

Where feasible, the quality assurance objectives for the collection of **field** measurements **and** laboratory analysis outlined in **[Section 10.0 of the *CSAP]*** will be **followed.**

5.1 Field Measurements

Field measurements will be collected **for** Site 2 as outlined in Section **[10.1 of the *CSAP.]***

5.2 Laboratory Analysis

Laboratory analysis for samples will be as outlined in Section **[10.3 of the *CSAP.]***

6.0 QUALITY ASSURANCE PLAN

The Quality Assurance Plan (QAP) prepared **for** the ***[CSAP]*** will be **used for** the Site 2 RI. The QAP is presented as Section **[15 of the *CSAP.]***

7.0 DATA MANAGEMENT PLAN

The Data Management Plan **(DMP)** prepared for the ***[CSAP]*** will be **used** for the Site 2 RI. The DMP is presented as Section **[14 of the *CSAP.*]**

8.0 REFERENCES

Collard, S. P. (1989). *Benthic Macroinvertebrate Species Indicator List.* Florida Department of Regulation. Star Grant 88-038.

Ecology and Environment, Inc. (1992a). *Contamination Assessment/Remedial Activities Investigation Work Plan-Group C, Naval Air Station Pensacola, Pensacola, Florida.* Ecology & Environment, Inc.: Pensacola Florida.

Ecology and Environment. Inc. (1992b). *Contamination Assessment/Remedial Activities Investigation, Data Summary and Preliminary Scoping Report for Ecological Risk Assessment Work Plans, Naval Air Station Pensacola, Pensacola, Florida.* Ecology & Environment, Inc.: Pensacola, Florida .

Ecology and Environment, Inc. (1991). *Interim Data Report, Contamination Assessment/Remedial Activities Investigation, Waterfront Sediments (Site 2), Naval Air Station Pensacola, Pensacola, Florida, Volumes I and II.* Ecology and Environment, Inc. Pensacola, Florida.

EnSafe/Allen & Hoshall ([1993]). *[Comprehensive] Sampling and Analysis Plan [for Naval Air Station Pensacola, Pensacola, Florida,* Pensacola, Florida (Draft) March 19931, EnSafe/Allen & Hoshall: Memphis, Tennessee.

EnSafe/Allen & Hoshall (1992b). *Remedial Investigation/Feasibility Study Work Plan for Site 42 — Pensacola Bay.* E/A&H: Memphis, Tennessee.

[Bold items enclosed in brackets denote changes to last version of document.]

U.S. Environmental Protection Agency (1991). ***Environmental Compliance Branch Standard Operating Procedures and Quality Assurance Manual*** (SOP/QAM). U.S. Environmental Protection Agency, Region IV: Athens Georgia.

9.0 FLORIDA PROFESSIONAL GEOLOGIST SEAL

I have read and approve of the Final Sampling and Analysis Plan for the Site 2 — Waterfront Sediments and seal it in accordance with Chapter **492** of the Florida Statutes. In sealing this document, I certify that the geological information contained in it is true to the best of my knowledge and that the geological methods and procedures included in this plan are consistent with currently accepted geological practices.

Name: Brian E. Caldwell
License Number: **1330**
Stake: Florida
Expiration Date: July 31, 1994

B E Caldwell
Brian E. Caldwell

5-7-93
Date

[Bold items enclosed in brackets denote changes to last version of document.]

APPENDIX A
HYDROLAB DATA SONDE SURVEYOR OPERATING PROCEDURES

HYDROLAB OPERATING PROCEDURES

Introduction

The Hydrolab DataSonde 3 **(DS3)** Multiparameter Water Quality Datalogger is an on-line transmitter of in-situ water quality measurements. The device measures temperature, pH, dissolved oxygen **(DO),** conductivity, salinity, depth, and oxidation/reduction potential (Redox) in lakes, streams, estuaries, or other large or small water bodies. The DS3 is designed for multi-mode operation. Data output can be continuously monitored, or the unit can operate remotely with data stored on board until downloading. Its digital output can be displayed, logged, downloaded to **a** personal computer, or remotely transmitted through a modem or communications link. The device is built for operation in abusive field conditions. Figure 1 outlines how **data** can be displayed for each measurement parameter.

DS3 Dah Display Variables

-Temperature in deg C/F

-pH in units

-Redox in millivolts

-Dissolved Oxygen (DO) in **mg/l or A Saturation**

-Conductivity in milliSiemens/cm, microSiemens/cm, K ohms/cm, or **resistivity**

-Salinity in ppt or total dissolved solids (TDS)

-Depth (feet or **meters) in level** or **total level**

Figure 1, DS3 Data Display Variables

The **DS3's** waterproof cylindrical core is constructed of durable plastic and contains **a** battery pack, a real-time clock, a solid-state memory package, and **logging** software. Attached to the lower end of the core is a multiprobe unit containing a temperature sensor, a specific conductance/salinity sensor, a pH glass electrode, a Redox sensor, a **DO** sensor, and a depth sensor. The lower end also contains the unit's sensor guard and ballast weight, or stirrer assembly. The upper end of the **DS3** unit contains the an **RS-232** data output port, and **a** stainless steel anchoring bail.

Standard Operating Mode

Once communication is established between the **DS3** and computer, the following introductory heading will appear on-screen:

HYDROLAB Datasonde 3 VX.YZ

(C)opyright 1990 Hydrolab Corporation

Time	Temp	pH	SpCond	Salin	DO	DO	Redox	Depth	Batt
HHMSS	deg C	units	ms/cm	ppt	%Sat	mg/l	mv	meters	volts

This header appears only if the header function of the Variables Menu is enabled. The header denotes the DS3's software version, its alpha-numeric name, measurement parameters currently enabled, and the current measurement variables selected for those parameters. If these features are changed after the program is entered, the new alpha-numeric name and parameters will be displayed when communication with the unit is re-initiated. Immediately following the appearance of the header, the DS3 will enter its Standard Operating Mode (SOM), whereby row after row of parameters will appear on screen. the third and fourth lines of the introductory header will be reprinted once every 24 lines so the columns can be identified once the initial header has scrolled off-screen.

The Basic Menu

The Basic Menu is accessed from the SOM by hitting the space bar. The following then appears on-screen:

HYDROLAB Datasonde 3 **V** X.YZ

- (P)arameters
- (C)alibrate
- (V)ariables
- (L)ogging
- (H)eader
- (M)easure
- (I)dentity
- or (Escape or Ctrl X to cancel)

[Bold items enclosed in brackets denote changes to last version of document.]

Typing any of the letters in parentheses will allow access to the menu of interest. Each entry within a menu results in the program returning to the **SOM.** The menu selection must therefore be re-accessed via the Basic Menu after each entry is made.

-Parameters

Typing a "P" will access the Parameters Menu, providing the following display:

- (p)H
- Specific (C)onductivity/Resistivity
- (S)alinity/TDS
- (%)Sat
- D(O)
- (R)edox
- (D)epth/Level
- (B)attery
- (A)ll
- or (Escape or Ctrl **X** to cancel)

Selecting the letter in parentheses allows individual parameters to be enabled or disabled from this menu. Care should be taken when using this function, as certain parameters are dependent upon others. For instance, disabling all forms of specific conductance will automatically disable DO, or enabling DO will automatically enable specific conductance. Time and Temperature cannot be disabled.

-Variables

Typing a "V" from the Basic Menu will access the Variable Menu, which allows default settings to be made for measurement variables. The Variable menu appears as follows:

- (T)emperature
- Specific (C)onductance/Resistivity
- (%) Sat

[Bold items enclosed in **brackets denote**
changes to last version **of document.]**

- D(O)
- (D)epth/Level
- (A)utolog
- **SDI-12** Addr(e)ss
- **SDI-12** De(l)ay
- (H)eader
- (B)uzzer
- (S)tirrer
- E(x)pert
- Ba(u)d Rate
- or (Escape or Ctrl X to cancel)

Typing any letter in parentheses will allow selection of a particular feature from the Variable Menu.

Temperature

This feature allows the temperature variable to be manipulated. Either the Centigrade or Fahrenheit scales are selected for temperature measurement.

Specific Conductance/Resistivity

This feature allows either specific conductance or resistivity to be selected as a measurement value, and permits additional attributes to be adjusted. Succeeding choice of measurement value, the presentation of this value is selected in either milliSiemens/cm or microSiemens/cm. Following selection of presentation format, the type of cell block is selected (freshwater if specific conductances between 0-10 mS/cm are anticipated, seawater if specific conductances greater than 10 mS/cm are anticipated). The specific conductance measuring range is then chosen. The measuring range can be automatic, or readings can be made in the high, medium, or low range. The next item selected is for salinity be measured, or TDS. The final item selected is for specific conductance/resistivity and salinity/TDS readings to be compensated or uncompensated for temperature.

% Sat

This feature allows a barometric pressure that is different from the calibration value to be entered, if necessary.

DO

This feature allows certain aspects of the DO measurements to be specified. Standard or Hydrolab LoFlow membranes are selected, as are whether readings are to be compensated for salinity, or uncompensated.

Depth/Level

This feature allows manipulation of the depth/level variable. Either meters or feet are chosen as an expression of depth. Following selection of the variable, either "depth" or "level" is chosen, depending on how the DS3 is equipped. If the unit is equipped with a depth transducer (having a range of 0-100 meters), depth is chosen for this expression. If the unit has a level transducer (having a range of 0-10 meters), level is chosen for this expression. The transducer type is printed on the DS3's label.

Autolog

This feature allows access to Autolog. This function enables or disables the automatically started logging sequence, which provides a record of all parameters once each hour. ***An*** enabled autolog can provide backup data for situations where the starting time or date, stopping time or date, or interval time has been incorrectly specified. Also, if for some reason there is a reset of transmitter electronics (power fluctuations, etc.), Autolog is set by default to be enabled.

SDI-12 Address

This feature allows the unit to be personalized. The **SDI-12** address that the user wishes to assign a particular **DS3** is entered.

SDI-12 is an interface bus designed to allow connection of a wide variety of transducers without having to worry about incompatible sensor outputs. It sends information to a single data recorder (the SDI-12 Controller) with a single cable bus.

[Bold items enclosed in brackets denote changes to last version of document.]

SDI-12 Delay

This feature allows incorporation of a measurement delay (normally **30** or 120 seconds).

Header

This feature allows the display of header information to be enabled or disabled. If enabled, header information is included in the data lines.

Buzzer

This feature allows the buzzer function to be enabled or disabled. If enabled, a buzzer sounds each time a reading is made.

Stirrer

This feature allows the stirrer function to be enabled or disabled. Once enabled, the DS3 automatically actuates the stirrer for each logging **run.**

Expert

This feature enables or disables the expert function, which abbreviates items appearing on the menu screen and data printout.

Baud Rate

This feature allows the unit to be set to a different baud rate before dumping a memory file. The **DS3** starts **up** ap 1200 baud. However, 1200 baud is not fast enough to keep up with a DS3 during recovery of logged data. The Baud Rate feature allows selection from 5 available baud rates (9600, 44800, 2400, 1200, or 300). The communications program for the computer will need to **be** set to the selected baud rate.

Report

This feature provides a report of all of the default settings currently selected from the Variable Menu.

[Bold items enclosed in brackets denote changes to **last version of document.]**

-Calibration

Prior to deployment of the **DS3,** the unit should be checked for calibration and operation. Calibration should also be periodically checked when the unit is deployed in the field for extended periods. The unit **is** calibrated by pouring a calibration standard into the calibration cup which comes with the apparatus. Alternately, the entire unit can be immersed in a bucket of calibration standard.

Typing a "C" from the Basic Menu will access the Calibrate Menu, which is displayed as follows:

- (p)H
- Specific (C)onductivity/Resistivity
- (S)alinity/TDS
- (%)Sat
- D(O)
- (R)edox
- (D)epth/Level
- (L)abel
- (T)ime
- (I)nterval
- (M)essage
- or (Escape or Ctrl **X** to cancel)

Typing any of the letters in parentheses will allow calibration of that particular function. Temperature is permanently set at the factory and is cannot be field calibrated.

pH

pH calibration is initiated by using a 7-buffer solution to first adjust the pH system's zero. Subsequently, a slope buffer solution is used **to** adjust the pH system's slope. The unit will accept any pH value between 6.8 and 7.2 for the zero setting. Typing in the value of the buffer automatically calibrates the pH system to zero. To adjust pH slope, the calibration procedure

is repeated with the slope buffer solution. The slope buffer value must be below 6.8 or higher than 7.2 for proper adjustment.

Specific Conductance/Resistivity

Specific conductance calibration is initiated by monitoring readings until they have stabilized for the standard solution, and then entering the value for the standard. If the default setting has been set to measure resistivity, the resistivity value for the standard is entered.

Salinity/TDS

Salinity calibration is initiated by accessing the salinity/TDS function. If the default setting is set for salinity, the value of the salinity calibration standard in parts per thousand at 25°C is entered. If TDS is the default selection, the TDS for the calibration standard is entered.

Dissolved Oxygen

DO calibration can be set for % saturation or for mg/l. Type "%" to calibrate for % saturation. Once into this function, enter the local barometric pressure (in millimeters of mercury). **This** adjusts calibration for <u>both</u> DO mg/l and DO % saturation (calibration should be 100.0 **for** the standard membrane, or 102.5 for the Hydrolab LoFlow membrane). Alternatively, type "O" to calibrate for DO mg/l. Enter the local barometric pressure as before, subsequently entering the DO concentration of the calibration standard as measured via Winkler titration or other instrumentation.

Redox

The Redox value of the calibration standard can be entered **upon** access to the Redox function.

Depth/Level

Depth calibration can be zeroed in air, at or near the surface of the water to be sampled, or at a known water depth. The depth is entered in either meters or feet, depending upon the default variable.

Additional Features of the Calibrate Menu

Entering the Label function allows the name of the transmitter to be changed (up to 12 characters). Accessing the Time function, allows the month/day/year/time to be entered. The military time format is used (HHMMSS). The Interval function allows the time to be set for the data printing interval. The Message Interval allows notes to be entered into the data record being created, if necessary, to help maintain clarity of the record.

-Logging

The Logging Menu allows the set up of a logging routine for automatic, unattended monitoring. The **DS3** transmitter can log in two forms of memory, depending upon the configuration of the unit. Standard memory can log up to **32,000** readings (allowing all parameters to be logged twice an hour for approximately 60 days). Extended memory can log up to 70,000 readings.

If information is downloaded to a computer, the PC must be IBM compatible, possess a serial or COMM port, have **DOS** version **2.0** or higher installed, and be compatible with a DB25F to DB25M adapter cable. The PROCOMM Plus Software Terminal Emulator Program is required to properly interface the PC with the **DS3.** To communicate with a PC, make sure the baud rates for both **DS3** and computer are compatible. The unit's default setting is 1200 baud, but can be changed through the Variable Menu. An interface cable, underwater cable, or calibration cable can be used to connect the **DS3** to the computer. Since the **DS3** needs to be powered during the logging sequence, sufficient battery power **needs** to be available. Once connected, if the **DS3** and computer are properly interfaced, pressing the space bar accesses the SOM/Basic Menu.

Typing an "L" from the Basic Menu allows access to the Logging Menu, which is displayed as follows:

- (D)ump
- (E)rase
- (S)etup
- S(t)atus

[Bold items enclosed in brackets denote changes to last version of document.]

- (R)eview
- (A)nnotate
- St(o)re
- or (Escape or Ctrl X to cancel)

Typing any of the letters in parentheses will allow entry into that particular logging function.

Dump

This feature allows the user to erase files no longer needed. Logging runs can be set up, and data files can be reviewed. Data storage on the manual file can be initiated, or this file can be annotated. Data can be dumped as "printer ready" if it is to be used for disk archiving or for word processing. Data can also be dumped into a file that is pre-formatted for a spreadsheet.

The Dump function allows selection of different configurations of variables/calibrations:

- Variables/calibrations in effect when the logging run was setup can be used,

- **If** re-calibration took place at any time during a **run, data** can be adjusted to reflect the calibration changes as they took place,

- The variables/calibrations current at the time of data dump can be used.

This feature allows comparison of readings for an indication **of** calibration drift. **If** improper variables were set, (cell block type, DO membrane type, etc.) corrections can be made by re-dumping with those variables changed to a proper setting.

Selection of the Printer Ready function allows automatic statistical work to be done. Statistics are compiled for each parameter in the form of the number of readings taken, the number of readings taken that were out of the parameter's measurement range, minimum and maximum readings, maximum rate of change between measurements, and mean/standard deviation. Daily statistics, total statistics, both daily/total statistics, or no statistics can be chosen.

[Bold items enclosed in brackets denote
changes to last version **of** document.]

If any parameter values are accompanied by an asterisk (*), that value **is** based on a default calibration setting. This means that the **DS3** has forgotten the calibration information provided for the sensor measuring that parameter, and has replaced it with a nominal calibration setting. The affected sensor needs re-calibration, and **if** the parameter affects other parameters, these will also appear with asterisks (ie. specific conductance, which affects salinity, DO and depth readings).

Selection of the Spreadsheet Importable function pre-formats data for spreadsheet distribution, quoting all text. This download is accomplished via an X-modem transfer. The Spreadsheet Importable function does not compute any statistics, however.

Erase

The erase function allows a file to be erased to regain use of the memory space occupied by that file.

Setup

This function allows a logging run to be setup. Prior to staring the logging **run,** the status of all enabled/disabled parameters should be checked, as well as the status of the stirrer **and** buzzer. The stirrer and buzzer cannot be altered during a logging run, while calibration and variables can be changed during a run.

To set up a run, the menu calls for the name of the logging run to be entered. It then asks for entry of commencement date/time (in MMDDYY/HHMMSS, and stopping date/time (in MMDDYY/HHMMSS). The program then asks for the time between logging scans (in HHMMSS), and if a warmup is desired prior to commencement **of** the run. The warmup function allows the DS3 to warmup for 2 minutes prior *to* the logging run, recommended if a stirrer is used or if DO-pH-Redox sensors are not continuously polarized. Power consumption must be considered. This 2 minute warmup is not necessary if the DO-pH-Redox internal polarizing batteries are used. These batteries continuously power the pH and Redox amplifiers, and the DO sensor, doing away with their 2 minute warmup requirement. **A** possible shortened

life span for the DO sensor must be considered. Even if no warmup is chosen, the **DS3** automatically warms up for **30** seconds prior to commencement of a logging scan.

Once a logging run has been setup, the **DS3** is put to sleep by disconnecting the interface cables. The transmitter will wake up automatically when the logging run starts. It will continue to wake up until logging is scheduled to stop, the power supply is depleted, or the memory is full.

Status

This function displays a logging status report. The name and number of each logging run is listed (start/stop/interval). Remaining memory (number of scans/readings based on current parameters) is listed, and remaining battery time (% battery life) is estimated.

Review

This function allows stored data to be scanned without dumping the entire file. The scan can begin at the beginning of a file, the end of a file, or at a specific date and time.

Annotate

This function allows a **49** character annotation to be entered in a text format adjacent **to** a particular file. The note will then be downloaded along with the file.

Store

This function allows a manual entry of data for a particular situation. **If** during a survey, the readings for a particular station have stabilized, the data can be immediately stored as a manual file.

-Header

Typing an "H" from the Basic Menu allows access to the Header Menu. This causes the header **to** be printed, and is useful if the Header function has been disabled through the Variables Menu. The header will appear as:

ABCDEF123456

Time	Temp	pH	SpCond	Salin	DO	DO	Redox	Depth	Batt
HHMSS	deg C	units	ms/cm	ppt	%Sat	mg/l	mv	meters	volts

-Measure

Typing an "M" from the Basic Menu allows access to the Measure Menu. Actuation of this feature will cause one line of data to be printed immediately. This is useful if the user wants to take occasional discretionary readings.

-Identify

Actuation of this feature from the Basic Menu causes the **DS3** to print its software version **and** parameters which the unit will currently support. It will appear as:

Hydrolab **DS3** VX.YZ TPCS%ORDB

Power Supply

The internal battery pack uses 10 "AA" batteries, which are contained in the upper part of the unit. The internal battery pack will support a unit for 20 days (stirrer used) or 30 days (no stirrer used). **A** submersible external battery pack can also be used, and will support the **DS3** for **up** to 140 days, but cannot be used with a stirrer. Power can also be furnished by cable. The power source must remain connected to the transmitter during the logging function.

Unit Configuration

Configuration of a **DS3** should be carefully considered. **If** the Hydrolab LoFlow DO sensor is used, internal polarizing batteries are necessary. This is because the LoFlow DO sensor requires

a 5 minute warmup period, and should therefore be continuously powered. If the standard membrane DO sensor is used, a stirrer is necessary unless a flow rate of 25 cm/sec is maintained past the sensor. The two minute warmup **is** sufficient for the standard **DO** membrane. **If** the LoFlow DO sensor is used, the weighted sensor guard is used over the multiprobe unit. The stirrer replaces the sensor guard when used, and also provides sensor protection and negative buoyancy.

Deployment

The DS3 is anchored by tying a rope or chain to the stainless steel bail at the top of the unit. The device should be fixed in either the upright or level position. The unit should be protected from floating debris, and should not be deployed in a location that makes it a navigation hazard. If marked with a buoy, it should not be made attractive to vandals. If the unit is stationed in shallow water, there is a danger it could be hit by boats or outboard motor propellers. [The instrument will be attached to the stand with the current meter or on a separate rod adjacent to the current meter. The unit will be marked by a buoy. Because the area is close to shore (i.e. not in the main traffic channel) it should not be affected by much boat traffic. NAS shore patrol and the U.S. Coast Guard will be informed of the locations of the **TWQ** stations.] It is recommended that the multiprobe weighted sensor guard or stirrer be installed, as well as the DO sensor guard. The pH reference electrode should be uncapped. Be prepared to re-calibrate as necessary. The DO membrane may require changing after **only** a few days.

DS3 Maintenance

[Each week the DS3 will be cleaned and calibrated and/or replaced by another unit that has been calibrated. The unit will be checked during the first week of deployment to discover any problems of biofouling and to determine if the membranes require more frequent changing.] Contaminated or worn out sensors will produce unreliable data. The maintenance manual provides instructions on replacing or servicing worn sensors. This requires careful disassembly of some of the sensors, and re-calibration. **A** maintenance schedule needs to account for periodic down time for each unit.

[Bold items enclosed in brackets denote
changes to last version of document.]

APPENDIX B

SURFACE WATER SAMPLING PROCEDURES

[Bold items enclosed in brackets denote changes to last version of document.]

Surface Water Sampling Procedures

The surface water sampling plan for the Site 2 RI will outline procedures for collecting water samples at the three TWQ stations located along the eastern nearshore area of Site 2. To maximize the analysis of nearshore surface waters in this area, surface water samples will be collected in conjunction with in-situ surface water characterization. Surface water sampling will adhere to the following approach:

- Surface water samples will be collected using a Kemmerer or similar device if the water depth is greater than 1 foot deep, or with a Teflon or stainless steel sampling device if the water is less than 1 foot deep.

- Salinity, dissolved oxygen, and temperature measurements will be collected before sampling to profile the sample area water column [to determine if stratification exists. In the presence of two or more haloclines, a sample will be collected from each stratum.]

- Samples will be collected [once a week] at each location of the in-situ TWQ stations [for approximately four] weeks (Figure 4-1).

- [The following sampling regime will be used for collecting surface water samples:]

Water Column Depth	Sampling Depth
0-3 feet	mid-depth
3-10 feet	1 foot below surface
	1 foot above bottom
> 10 feet	1 foot below surface
	mid-depth
	1 foot above bottom

[Bold items enclosed in brackets denote changes to last version of document.]

- One surface water grab sample will be collected **[at]** mid-depth **[from each station each week]** for total suspended solids **(TSS)** analysis.

- Appropriate entries will be made in the field logbook.

- Physical water quality parameter data from the TWQ stations will be downloaded to a portable computer after surface water samples are collected.

- If the location includes any sediment sampling stations, the surface water quality samples will be collected first to minimize any disturbance **of** sediments.

- Sample containers from an approved laboratory will be appropriately filled, chemically preserved, **if** needed, and stored at **4°C.**

- Appropriate decontamination procedures will be followed, in accordance with Section **4.6 of** this ***SAP.***

- Sample management, processing and chain-of-custody procedures will be in accordance with Sections 4.7 and **4.8** of this ***SAP.***

[Bold items enclosed in brackets denote changes to last version of document.]

APPENDIX C

SEDIMENT SAMPLING PROCEDURES

[Bold items enclosed in brackets denote changes to last version of document.]

Sediment Sampling Procedures

Sampling Reference Document: **U.S.** Environmental Protection Agency. (1991). *Environmental Compliance Branch Standard Operating Procedures and Quality Assurance Manual*, U. **S.** Environmental Protection Agency Region **IV,** Environmental Services Division, February 1, 1991.

Sediment Sampling Equipment:

- Coring device (a modified split-barrel or similar push tube sampler) 2 feet long. It will be usable either with or without insertable sleeves.

- Drive hammer to manually propel the device to the desired sampling depth.

- Extension rods (if needed).

Sediment Sampling Procedures:

Sampling personnel will collect **[four]** separate cores from each **[FSA]** sample location: **[three]** for analysis, **[one]** other for lithologic description.

Sample collection procedures ([All] cores):

- Locate the sample collection point on the site map and reference it appropriately in the field logbook.

[• Locate boat over sample location as accurately as possible.]

- Use a clean, decontaminated sampling device and gloves for each sample. Samples collected for laboratory analysis will be collected using decontaminated stainless steel sampling sleeves.

- Collect the sample **[in a manner that will result in]** the least amount of disturbance to the collection area.

- When collecting sediment from water bodies, avoid sediment plumes and density currents.

- Repeat sampling as necessary to collect enough sample volume.

- Drive the sampler to the proper depth and carefully extract the enclosed sample.

- Remove sleeve inserts or unsleeved core from the sampler without disturbing the sample.

- Seal each sleeve on each end with Teflon tape and PVC caps, label the sleeve and mark the top and bottom of the sleeve for orientation.

- Preserve the samples at 4" C.

- Identify the sample, label it and follow documentation procedures to maintain the necessary chain-of-custody.

- Submit sleeves to the laboratory for analysis as outlined below.
  - Sleeve #1: 0.0 to [1.0]-foot bls for TCL VOCs, [BNA's], TAL metals, [pesticides, PCBs, and gross radioactivity screening]
  - Sleeve #2: [1.0 to 2.0 foot bls for TCL VOCs, BNA's, TAL metals, pesticides, PCBs, and gross radioactivity screening.]

- Collect [another] core without sleeves for description using the Unified Soil Classification System.

Important Note: The sleeves will not be composited or homogenized before laboratory analysis.

Locations under water: Specific sampling guidelines will be followed according to the situation encountered at each location, in particular. locations submerged under water. Some areas may require either nearshore or offshore sampling. A boat will be used for water deeper than wading depth.

[Bold items enclosed in brackets denote
changes to last version of document.]

- Depending on water depth and substrate consistency, a small boat may be required. Soft bottom substrates may prevent access by wading or excessively disturb the sample area. In such a situation, a small, shallow-draft boat **[will be used]** for a sampling platform.

- Use extension rods for samplers and assistance of a diver in deep water locations.

- Once sampler is driven into the sediments, be careful that the sample is not washed out during the extraction process.

- Cap the top of the sampler to prevent suction from extruding the sample through the bottom end of the sampler during extraction.

- Once the sampler is removed from the sediments, cap the bottom before removing the device from water.

- In deeper water, a diver may assist with the sampling, specifically retrieving and capping the sampler.

- Do not composite sediments for volatile organic analysis. Place them directly into appropriate sample containers and quickly ***seal*** the containers.

Important Notes:

After sampling is complete, bag disposables and place them in appropriate receptacles. Record all relevant sampling information in the field logbook before leaving the site.

[Bold items enclosed in brackets denote changes to last **version of document.]**

APPENDIX D

BIOTA SAMPLING PROCEDURES

[Bold items enclosed in brackets denote changes to last version of document.]

Biota Sampling Procedures

The biota sampling strategy will adhere to the following approach:

- Biota sampling will follow sediment sample collection in order to prevent sediment disturbance.

- Samples will be collected with a Ponar grab sampler at each location.

- The boat will be positioned as accurately over the survey point as possible.

- Water depth will be measured and recorded relative to available tidal information before sample collection.

- The Ponar Grab will be dropped over the boat's side with jaws locked in the open position.

- The grab will be collected by raising the line to which it is attached, initiating the mechanical closing action of the grab's jaws.

- Once on board the boat, the grab will be emptied into a large plastic tub, and the volume of the grab's contents will be **[measured].**

- The volume of the sample will be recorded, and the sample will be sieved through a **30** cm x 30 cm sieve (mesh size of 0.5 mm) held over the side of the boat.

- Seawater will be poured over the sieve until the sediments are separated from the target species.

- The biota sample will then be separated into a sample jar(s) and preserved with 10 percent Formalin.

[Bold items enclosed in brackets denote changes to last version of document.]

- The jar(s) will be labeled and submitted to **[the]** selected subcontractor **for** identification to the genus level.

- The indicator species list for Pensacola Bay published by Collard **(1989)** (Table D-1) will be used as a target species list for the biota sampling plan.

- Representative samples of each species may be preserved for future use.

- Appropriate notes will be made in the field logbook.

- Decontamination will be performed as necessary.

Table D-1

Pollution Indicator Species for Pensacola Bay

Phylum	Class	Family	Genus/Species	Description
Annelida	Polychaeta	Capitellidae	***Capitella capitata***	Polychaete worm
Annelida	Polychaeta	Capitellidae	***Heteromastus filiformis***	Polychaete worm
Annelida	Polychaeta	Capitellidae	***Mediomastus ambiseta***	Polychaete worm
Annelida	Polychaeta	Dorvilleidae	***Protodorvillea kefersteini***	Polychaete worm
Annelida	Polychaeta	Gonaidae	***Glycinde solitaria***	Polychaete worm
Annelida	Polychaeta	Lumbrinendae	***Lumbrineris culveri***	Polychaete worm
Annelida	Polychaeta	Lumbrineridae	***Lutnbrineris ernesti***	Polychaete worm
Annelida	Polychaeta	Lumbrineridae	***Lumbrineris verrili***	Polychaete worm
Annelida	Polychaeta	Lumbrinendae	***Lumbrineris tenuis***	Polychaete worm
Annelida	Polychaeta	Nephtyidae	***Nephtys picta***	Polychaete worm
Annelida	Polychaeta	Nereidae	***Nereis succinea***	Polychaete worm
Annelids	Polychaeta	Orbiniidae	***Haploscolopos foliosus***	Polychaete worm
Annelida	Polychaeta	Orbiniidae	***Haploscolopos fragilis***	Polychaete worm
Annelida	Polychaeta	Orbiniidae	***Scolopos rubra***	Polychaete worm
Annelida	Polychaeta	Phyllodocidae	***Eteone heteropoda***	Polychaete worm
Annelida	Polychaeta	Spionidae	***Paraprionospio pinnata***	Polychaete worm
Annelida	Polychaeta	Spionidae	***Polydora cornuta***	Polychaete worm
Annelida	Polychaeta	Spionidae	***Polydora ligni***	Polychaete worm
Annelida	Polychaeta	Spionidae	***Polydora socialis***	Polychaete worm
Annelida	Polychaeta	Spionidae	***Polydora websteri***	Polychaete worm
Annelida	Polychaeta	Spionidae	***Prionospio cristata***	Polychaete worm
Annelida	Polychaeta	Spionidae	***Prionospio dayi***	Polychaete worm
Annelida	Polychaeta	Spionidae	***Prionospio heterobranchia***	Polychaete worm

[Bold items enclosed in brackets denote changes to last version of document.]

Table D-1 Pollution Indicator Species for Pensacola Bay				
Phylum	Class	Family	Genus/Species	Description
Annelida	Polychaeta	Spionidae	*Scolelepis squamata*	Polychaete worm
Annelida	Polychaeta	Spionidae	*Streblospio benedicta*	Polychaete worm
Arthropoda	Crustacea	Corophidae	*Corophium louisianum*	Amphipod
Arthropoda	Crustacea	Corophidae	*Corophium tuberculatum*	Amphipod
Mollusca	Bivalvia	Corbulidae	*Corbula contracta*	Clam
Mollusca	Bivalvia	Tellinidae	*Macoma tenta*	Clam

Source: Collard (1989).

[Bold items enclosed in brackets denote changes to last version of document.]

APPENDIX E

NISKIN WINGED CURRENT METER OPERATING PROCEDURES

[Bold items enclosed in brackets denote changes to last version of document.]

GENERAL OCEANICS

MODEL 6011 MkII

NISKIN WINGED CURRENT METER

OPERATING MANUAL

RAM MEMORY

MARCH 1991

Preliminary

YOUR CURRENT METER SHOULD BE RECEIVED WITH THE FOLLOWING ITEMS. PLEASE CHECK WHEN UPACKING TO BE SURE THEY ARE INCLUDED.

1. 6011MK2 CURRENT METER
2. VISIBLE SENSORS, PRESSURE & CONDUCTIVITY
3. WIRE MOORING STANDOFF FRAME (W/ANODES) AND WIRE STOP
4. RAM MEMORY CARTRIDGE *
5. OPERATORS MANUAL

*RAM MEMORY CARTRIDGES AND RAM READER KITS ARE PRICED SEPARATELY

IF ANY OF THE ITEMS ARE MISSING, PLEASE CONTACT G.O. ASAP

INC. • 1295 N.W. 163rd Street, Miami, Florida 33169-9922 • Tel.: (305) 621-2882 Telex: 80-8247 Fax: (305) 621-1710

TABLE OF CONTENTS

1 INTRODUCTION 1
2 PRINCIPLES OF OPERATION 3
2.1 Basis 2
2.2 Vector Averaging 4
2.3 Self test 6
3 CONTROLS AND INDICATORS 6
3.1 User Operated Controls 6
3.2 External ON/OFF Switch 6
3.3 Sampling Interval 6
3.4 Burst Length 8
3.5 Burst Interval 8
3.6 Trigger Reset 8
3.7 Mode Selector 8
3.8 Self-Test Lamp 9
4 RAM MEMORY-OPERATION 9
4.1 Introduction 9
4.2 Cartidge Data Capacity 9
5 INSTRUMENT PREPARATION 10
5.1 Battery Capacity 10
5.2 Battery Replacement 10
5.3 Switch Settings 10
5.4 Sealing Up 11
5.5 Deployment 11
5.6 Fin Change 11
6 DEPLOYMENT 11
6.1 Preparing for Deployment 11
6.2 Unplugging the Cartrige 12
6.3 Other Notes 12
6.3.1 Battery Life 12
6.3.2 Last Record Data Loss 13
6.3.3 Monitor Connector 13
6.3.4 Serial Number Record 13
6.3.5 Data Format 13
7 BATTERY 14
7.1 Battery Safety 14
8 CAUTIONARY NOTES 15
8.1 Choice of Sampling Interval 15
9 SPECIFICATIONS 16
10 MOORING METHODS 18
11 CALIBRATION CURVES 21
12 MAINTENANCE 28
12.1 Routine Care 28
12.2 Antifouling Treatment 28
12.3 Spare Parts 29

FIGURES

Fig.1 Simplified Program Flow Chart

Fig.2 Real-Time Clock, Block Diagram

Fig.3 Electronics Package

Fig.4 Deployment for Near-Bottom Measurement

Fig.5 Typical Deep-Sea Deployment

Fig.6 Calibration Curve
Low-Speed Fin: No Environmental Sensors

Fig.7 Calibration Curve
Low-Speed Fin with Conductivity

Fig.8 Calibration Curve
Standard Fin: No Environmental Sensors

Fig.9 Calibration Curve
Standard Fin with Conductivity

Fig.10 Calibration Curve
High-Speed Fin: No Environmental Sensors

Fig.11 Calibration Curve
High-Speed Fin with Conductivity

1 INTRODUCTION

The General Oceanics model 6011 MkII is a battery-powered RAM recording current meter. It measures current by measuring the angle of tilt of its own housing when suspended from a suitable mooring. Wings on the housing orient the meter with the current, the direction of which is then determined by a solid-state flux-gate compass. The absence of rotors and other delicate external sensors, together with its extremely low power consumption, make the meter ideal for long term deployments in the deep ocean, while its small size and ease of handling make it the choice for much inshore work.

The meter inc'orporates a real-time clock. This means that Universal Coordinated Time (GMT) is recorded with each data point on the RAM cartridge. Log keeping and data analysis are thereby simplified and there is less chance of ambiguity in interpreting the data record. The real-time clock is powered by its own battery, which is separate from the meter's main power battery, and which has a five-year lifetime.

The basic meter records temperature as well as the data tor current speed and direction. Sensors to measure conductivity and pressure are also available as options.

In the "Vector-Averaging" mode, the internal microprocessor computes the average east and north components of current from a number of individual readings and records only those averages on the RAM cartridge, a data compression technique which increases the effective capacity of the cartridge by up to thirty-two times. The microprocessor also computes and records the standard deviation of the averages to provide information on the noise environment of the meter. Vector-averaging is the preferred mode of operation. It provides the maximum amount of data and requires the least amount of post-deployment data processing.

After the meter has been recovered the RAM cartridge must be processed. General Oceanics offers the service of reading RAM cartridges and supplying a complete range of data products. Alternatively, the user can acquire a model 6011RR RAM reader to interface with any one of a range of desk-top computers, which allows the user t.o process the data himself'.

General Oceanics can supply auxiliary hardware to facilitate deployment of the model 6011 current meter in a wide range of situations. Deployment from a fixed structure such as an oil rig or harbor pier is the easiest to set up. For near-bottom measurements, a "gallows" frame is available which provides a fixed point mooring at a known height in the water. Most deployments use a wire mooring with either a surface or sub-surface float. For this application a "stand-off'' is used, which can be clamped to the wire at any depth without cutting or damaging the wire in any way. The stand-off not only keeps the

meter clear of the wire, but also de-couples the meter from mooring motion. Both a standoff and a wire stop are supplied with the meter.

The design of the stand-off and the operating principle of the meter itself both help to simplify mooring design. Being able to clamp the stand-off at any point along the wire makes it easy to re-configure a mooring to meet changing operational requirements Also, since the meter takes up an angle of tilt determined only by the current, the tilt of the mooring itself is a secondary consideration. This means that, particularly in high current regimes, buoyancy requirements and anchor weights can be greatly reduced.

The meter is normally supplied with a standard fin which covers the speed range zero to 225 cm/sec. For greater resolution at low speeds or to extend the range to higher speeds, low-speed and high-speed fins are available.

2 PRINCIPLES OF OPERATION

2.1 Basis

The Model 6011 MK II current meter is a microprocessor controlled data logger which captures data from a number of sensors and then records them on a RAM cartridge. The overall operation of the meter is best explained by the simplified program flow chart shown in Fig. 1.

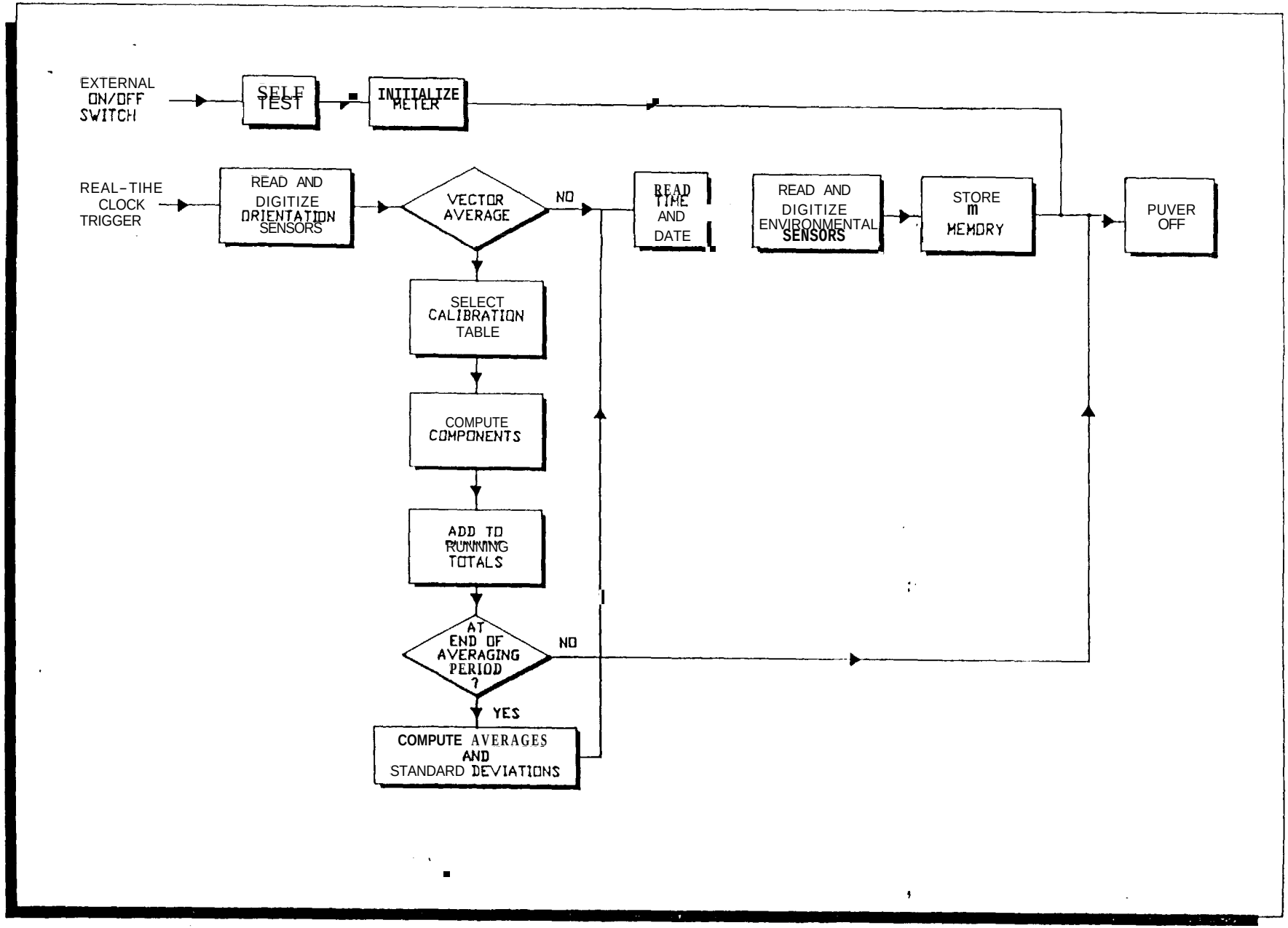

Fig.1 Simplified Program Flow Chart

2.2 Vector Averaging

In the vector-averaging mode, the microprocessor proceeds to compute the north and east Components of current immediately after is has read the orientation sensors. To compute the components it needs to know which of the three fins are fitted to the meter. This information is provided by the setting of the mode selector switch: positions 2, 3 and 4 for vector averaging with low, standard and high speed fins. The number of samples over which the average is taken is determined by the setting of the samples-per-burst switch on the real-time clock board. As shown in Fig. 2, a line called "burst status" remains low during the burst period. All the time the status line is low, each component is added to a running' total. If it is high, signalling the end of the averaging period, the running total is divided by the number of samples to arrive at the average. Standard deviation is treated in a similar way. The meter then goes on to read the real-time clock arid the outputs of the environmental sensors. Each reading is tagged with time and recorded to RAM. Finally the meter is powered down. This means that battery power to the sensors and any other high current components is switched off; only the essential time-keeping components and some of the data memory remain operating. Hence, current consumption between samples is reduced to a few microamps, allowing the meter to operate for up to one year on a single batter. One can see from the last. part of the flow chart that time, date and the readings of the environmental sensors that are recorded correspond to the LAST of the samples used to form the vector averages of current, a point that may be significant in data interpretation.

Calibration tables for all three fins are stored in the meter so that if a fin is changed it is necessary to set the mode selector switch to the new position. The tables for meters fitted with pressure and conductivity sensors are slightly different from those without.

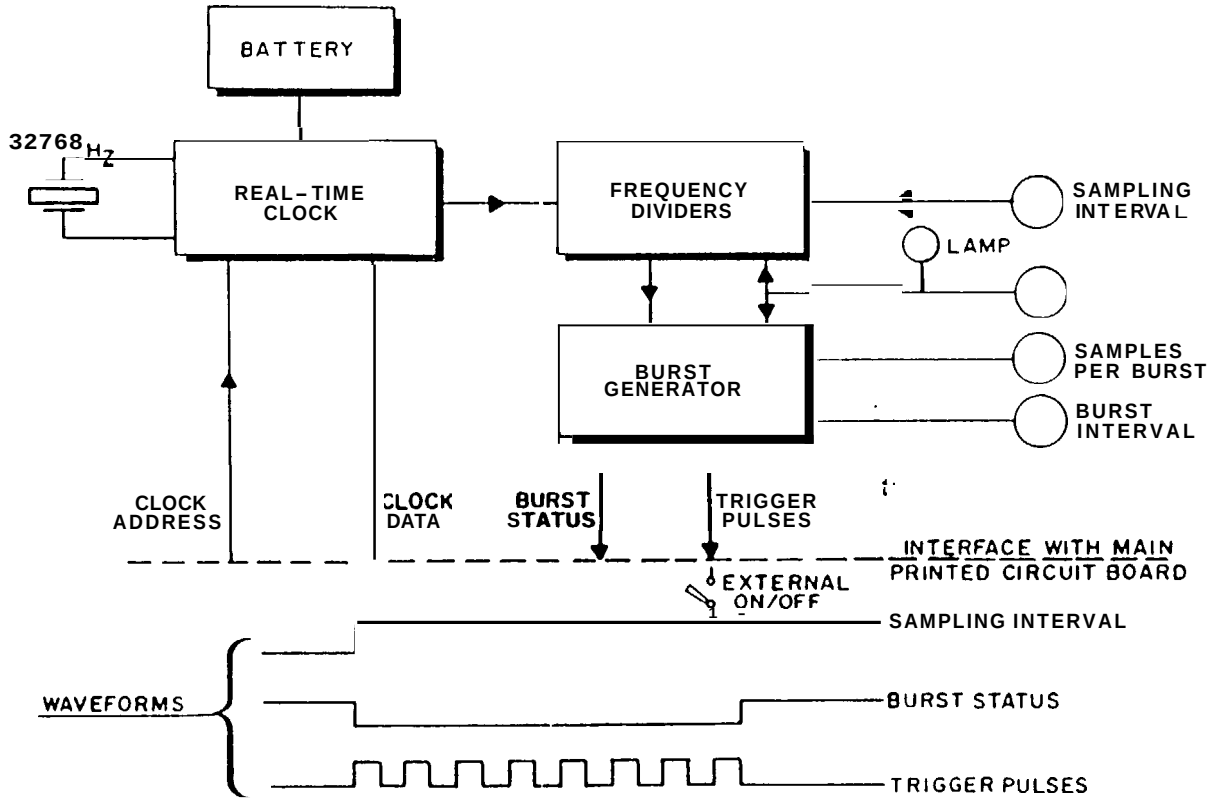

Fig. 2 Real-Time Clock. Block Diagram

2.3 Self test

An external ON/OFF switch is mounted on the end cap of the meter's pressure housing. As the hardware block diagram in Fig. 2 indicates, when the switch is in the ON position trigger pulses from the real-time clock are allowed to reach the power control circuitry and the meter cycles through its measuring and recording functions as already described. In the OFF position the meter remains in the quiescent, low power, condition. Turning the switch from OFF to ON triggers a self-test and initialization sequence.

3 CONTROLS AND INDICATORS

3.1 User Operated Controls

The Model 6011 Mk II current meter has a number of user-operated controls which select the various operating modes and sampling intervals. Most of the controls are mounted on the main printed circuit boards (see Fig.3) and are accessible only when the meter is withdrawn from its pressure case. The one external switch is mounted on the end cap opposite to the swivel end. Conductivity and pressure sensors, when fitted, are mounted on the same end cap.

3.2 External ON/OFF Switch

This rotary action switch controls the flow of trigger pulses from the clock board to the main board. In the OFF position no pulses get through and the meter remains in its standby state drawing minimum battery current. In the ON position the meter is triggered into operation at the rate set by the sampling-interval and burst-sampling switches. If the meter is out of its pressure case, the successful progress of the routine can be followed by counting the eight flashes of the self-test lamp.

Normally, this switch will be turned ON or OFF once or twice as part of the check out procedure and then left OFF until just before deployment.

3.3 Sampling Interval

This switch sets the basic sampling interval of the meter in all its operating modes. Operated with the aid of a small screwdriver, this 10-position switch selects intervals from 7.5 seconds to 60 minutes. See SPECIFICATIONS for the full range of available intervals.

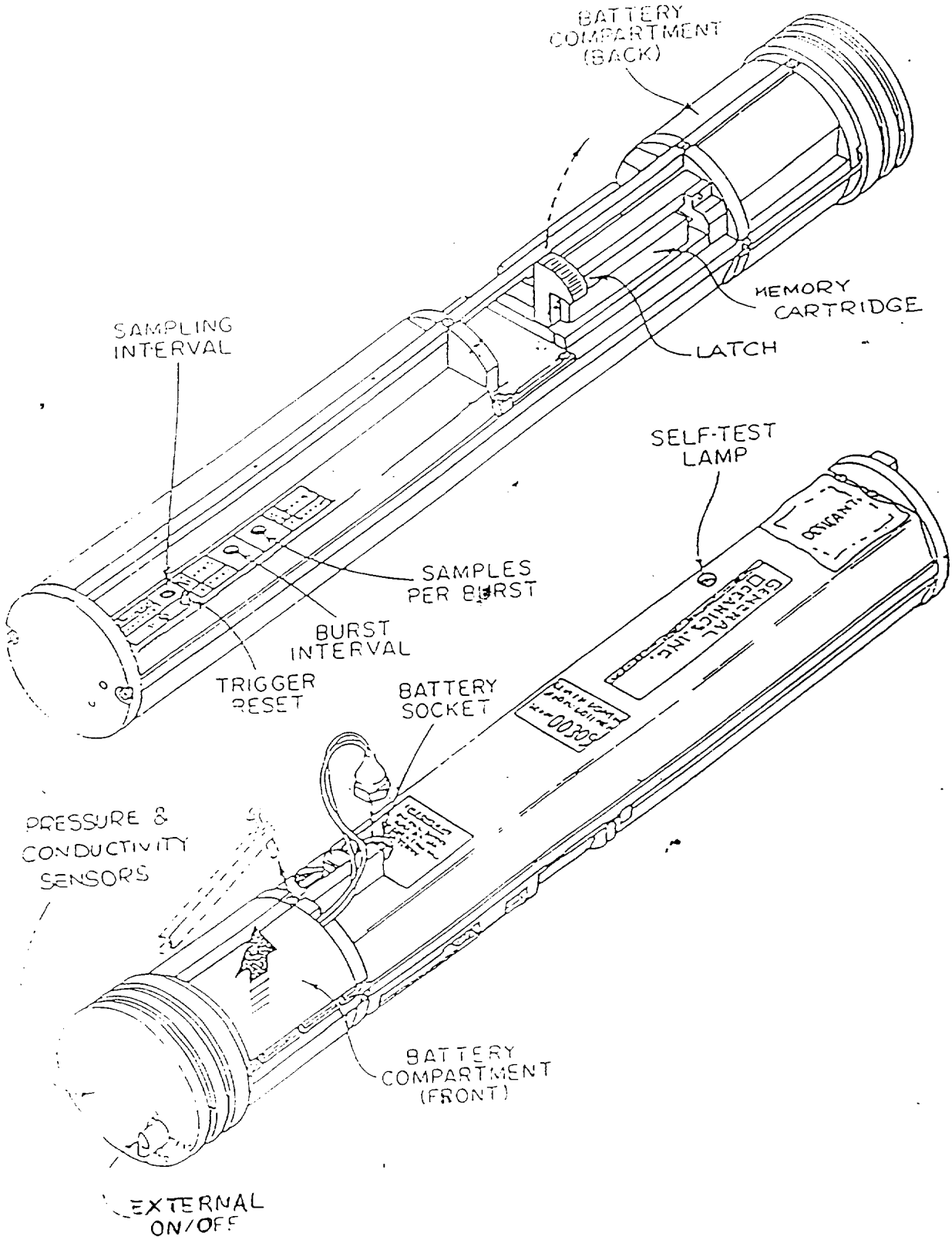

Fig.3 Layout of main features and controls

3.4 Burst Length

A 6-position switch selects the number of samples in a burst. The numbers available are one to 32 in 1:2 steps. This switch selects the number of samples over which the average is taken. In position six, for example, a burst of 32 samples will be averaged before being recorded as a single value. With the switch in position one, the burst length is a single sample.

3.5 Burst Interval

A 4-position switch determines the interval between the samples to be used in a vector average. Thus, if a burst of eight samples and an interval of four seconds are selected, the effective averaging period will be 32 seconds.

3.6 Trigger Reset

Pressing this button resets the counting circuitry so that trigger. pulses can be made to occur at a known time in each hour. The general rule is that the first trigger pulse occurs at a time one half of the selected sampling interval after pressing the reset button. If a sampling interval of one minute has been selected, for example, then the first trigger will occur 30 seconds after pressing the trigger reset button, the next at one minute and thirty seconds, the nest at two minutes and 30 seconds and so on. The general rule does not apply- for the 30 and 60 minute sampling intervals. In both cases the first trigger occurs 22.5 minutes after reset; all the following ones are at. the selected intervals.

The red indicator lamp next to the button provides a positive indication that reset- has occurred.

The push-button has no effect on the setting of the real-time clock.

3.7 Mode Selector

This switch, mounted on the opposite side of the meter from the other four controls, determines the vector-averaging mode. Position 1 is for factory use. Positions 2, 3 and 4 select the vector averaging mode. Position 2 should be used if a low-speed fin is fitted to the meter, 3 for a standard fin and 4 for a high-speed fin. When computing the vector averages, the microprocessor examines the switch setting in order to select the correct fin calibration look-up table.

3.8 Self-Test Lamp

When the meter self-test is triggered by actuating the external ON/OFF switch, this lamp flashes at the rate of eight times in three seconds as the test proceeds.

4 RAM MEMORY OPERATION

4.1 Introduction

RAM Memory is a solid-state memory system which replaces the more traditional tape recorder and data cassette for long term storage of the data gathered by the current' meter. It makes use. of a removable data cartridge containing its own 10-year battery power source. The cartridge is smaller than a standard audio cassette, offers up to twice the data capacity, and can be quickly and conveniently changed in the field with no external equipment.

The design of the RAM Memory incorporates a number of features to ensure that recording will take place reliably during a deployment and that. data cannot be accidentally erased after a recovery of the meter. For instance, a mechanical interlock prevents the user closing the pressure housing if the cartridge is incorrectly seated in its holder and a self test procedure warns if the cartridge's internal battery has run down. After recovery, a write-protect switch on the cartridge can be set, thus making it almost impossible to inadvertently erase the stored data,

A simple reader is available (6011RR) which plugs into an expansion slot of an I.B.M.* P.C. or PC/XT desktop computer. This, together with software which is supplied by General Oceanics, allows the user to read and process the data stored in the cartridge.

*Registered trademark of' International Business Machines Corporation.

4.2 Cartidge Data Capacity

Cartridges are available in nominal capacities of 64, 128, 256 and 512 kilobytes. Each data record in the meter is stored as a 13-byte word. In addition, 13 bytes are used to store the instrument serial number together with some information used internally by the meter itself. Taking as an example a 128 kbyte cartridge, we can now calculate its capacity in terms of data records. The actual size of the cartridge is 131,072 bytes. This leaves 131,059 bytes for useful data, which is equivalent to

10,081 complete data records. The corresponding figures for the other sizes are 5,040, 20,163 and 40,328 data records. The largest capacity cartridge, therefore, allows recording once every ten minutes for almost a full year.

5 INSTRUMENT PREPARATION

5.1 Battery Capacity

First check that there is sufficient battery capacity remaining to run the instrument for the planned deployment period. The only way to be sure of this is by keeping an accurate record of battery use on the label provided on 'the 'side of the battery. If there is any doubt, use a new battery. (Refer to section 6.3.1 Battery Life.)

5.2 Battery Replacement

The actual removal and replacement of the battery is very straight forward. The grey plastic battery holder is held in place by a short retaining bar which is secured with a single captive screw. Battery connection is via the blue 5-pin connector at the end of the short pigtail. As the battery holder is being slid into position, take care to guide the pigtail into the slot provided.

5.3 Switch Settings

First select the mode, selector switch. If vector averaging then make sure the switch points to the correct fin . Then set the burst-interval and samples-per-burst switches for the desired averaging period. 'Thirdly, bearing in mind the constraints pointed out. in paragraph 8., select the sampling interval to match the planned deployment period. Finally, press the trigger reset button to lock the triggering sequence in the right phase with the real-time clock.

Again, for many applications, averaging over 32 samples at 2-second intervals (Samples-per-Burst=32: Burst Interval=2sec.) provides good coverage. The sampling' interval can be set anywhere between 2 minutes and 30 minutes, depending on the duration of the deployment.

When the instrument has been prepared as just described, activate the external ON/OFF switch to trigger the self test sequence (eight flashes of the self test lamp). Some practice may be needed in positioning the meter so that the self-test lamp can be observed while activating the external switch. If all is well at this stage the switch should be turned off and the meter sealed in its pressure housing.

5.4 Sealing Up

The important points at this stage are (1) place a desiccant bag in the pressure housing, and (2) make sure that the single O-ring seal, and its mating surface, are clean, lightly greased and undamaged. **CHECK THAT THE SERIAL NUMBER OF THE HOUSING MATCHES THAT OF THE METER'S ELECTRONICS.** Slide the meter carefully into the housing, checking that the battery pigtail is tucked out of the way. Turn the meter so that the alignment hole in the end cap matches the one in the housing. As the meter is driven home, the pin at the end of the meter should engage the locating hole in the far end cap. Secure the meter using the thick nylon monofilament locking cord. It should slide into the matching half-grooves in the end cap and the pressure housing until only the L-shaped termination is exposed. The short end of the L is then pressed into the aligned holes. This ensures that the meter's internal sensors are lined up with the center line of the fin.

5.5 Deployment

After the meter has been prepared as described in the foregoing paragraphs, all that remains is to TURN THE EXTERNAL SWITCH ON and attach the meter to the mooring.

5.6 Fin Change

If the meter is to be used in areas where very high or very low currents are expected, the standard fin can be replaced by one with the appropriate range (see SPECIFICATIONS for ranges available). The fin is secured by two cable ties which rest in grooves in the pressure housing (see section 12.3 for part numbers of replacement ties). The fin is aligned with the meter's direction sensors by- the nylon bolt at the swivel end of the housing; the bolt is in turn secured by a locking screw in one of the lugs of the end cap. Note that although the fin can be changed, **THE PRESSURE HOUSING AND ELECTRONICS PACKAGE MUST STAY TOGETHER AS A PAIR TO PRESERVE THE ACCURACY OF CALIBRATION.**

6 DEPLOYMENT

6.1 Preparing for Deployment

In preparing a meter the user should, in general, follow the procedures detailed in Section 5 (INSTRUMENT PREPARATION) of the Operating Manual.

The mode selector switch (described in section 3.7) should be set to position 2, 3, or 4 depending on whether a low, standard or high speed fin is fitted to the meter.

Fig.1 shows the RAM Memory cartridge in place in the current meter. To plug in the cartridge simply lift the latch, turn the cartridge so the write-protect switch faces outwards, and insert it into the 30-pin socket. If the cartridge is not properly seated, the latch will not spring back to its fully closed position and it will be impossible to slide the meter into the pressure housing.

Finally, set the write-protect switch on the cartridge to OFF, plug in the battery, and turn on the external ON/OFF switch. The meter will then go through a self-test routine as indicated by the Self-Test lamp flashing eight times. If the lamp does not flash, check that the cartridge is properly plugged in with the write-protect switch off.

6.2 Unplugging the Cartrige

When the current meter is recovered at the end of a deployment it will be necessary to remove the cartridge from the meter in order to read it. The cartridge is so designed that is very difficult to lose or alter the stored data while unplugging it,. However, to be absolutely sure, the following procedure should be followed:

a) As the meter arrives on deck set the External ON/OFF switch to the OFF position and note the time.
b) Rinse with fresh water and dry the meter as usual.
c) Remove the meter from the pressure housing.
d) Set the write-protect switch on the RAM cartridge t.o the ON position.
e) Unplug the battery.
f) Lift the latch (see Fig 1) and remove. the cartridge from its socket.

All the time the cartridge is out of the meter the write-protect switch should be left in the ON position.

6.3 Other Notes

6.3.1 Battery Life

RAM Memory draws less power from the battery allowing more readings to be taken. For instance, when taking 32-sample averages, the battery has enough energy for 40,000 32-sample averages. So, the maximum deployment time is one year OR the time to record 40,000 32-sample averages OR 80,000 16-sample averages OR 160,000 8-sample averages, whichever is the shortest. Note that the 40,000 averages could be recorded in a single deployment using a 512 kbyte cartridge or in a series of deployments using a 128 kbyte cartridge several times.

6.3.2 Last Record Data Loss

The RAM Memory system can loose some data as a result of the averaging process itself. For example in the process of assembling a 32-reading average, the meter is switched off just before taking the 32nd reading 31 data points have been lost.

6.3.3 Monitor Connector

The monitor connector is disabled except for the manufacturers use. To check out a meter, it is a simple matter to record a few minutes' worth-of data and then read the cartridge.

6.3.4 Serial Number Record

The first two bytes in the RAM Memory cartridge are used to record the meter's full serial number.

6.3.5 Data Format

Data within the meter are handled as binary numbers, each having sufficient bits to match the required precision. As the data are prepared for recording the individual numbers are stacked end to end to form a string 104 bits long. During the recording process itself the string of bits is stored in the RAM Memory cartridge eight bits at a time as 13 bytes. The bits for each record are organized as follows in the order shown:

Data	Number of Bits
Month	4
Day	5
Hour	5
Minute	6
Pressure	12
Temperature	12
Conductivity	12
East current component	12
West current component	12
Standard deviation in east component	12
Standard deviation in west component	12
Total	104

The way in which each piece of data is encoded and the significance of each bit in the record are as follows:

Number of bits	Vector Averaging
1	1
7	Serial Number
4	Month
5	Day
5	Hour
6	Minute
12	Pressure
12	Temperature
12	Conductivity
12	East Component
12	North Component
12	E. Std. Deviation
12	N. Std. Deviation

11.2

7 BATTERY

7.1 Battery Safety

Lithium batteries store a large amount of energy in a small volume so they should always be handled with care. The following rules should be followed:

DO NOT incinerate, short. circuit, puncture, crush or disassemble the battery.
DO NOT attempt to re-charge the battery.
DO NOT store or use the battery at temperatures above 72 deg. C.

8 CAUTIONARY NOTES

8.1 Choice of Sampling Interval

When vector averaging, the sampling interval must be long enough to allow the meter to complete its cycle of operation. For example, if a burst length of 32 samples is selected together with a burst interval of two seconds the cycle takes almost 64 seconds to complete. In this case the sampling interval should be no less than two minutes
(since the next shortest interval, one minute, is insufficient to accommodate the complete cycle).

If too short an interval is inadvertently selected the meter automatically compensates, for many combinations of burst length and burst. interval, by ignoring the intermediate trigger pulses. However, at best, this can only complicate later interpretation of the data record.

9 SPECIFICATIONS

Speed:
Sensor: Force-balance tilt sensor.
Range: 0 to 300 cm/sec. (with appropriate fin)
Accuracy: +/- 1 cm/sec.
Resolution: +/- 1 cm/sec.

Direction:
Sensor: Three-axis flux-gate compass
Accuracy: +/- 2 degrees.
Resolution: +/- 1 degree.

Temperature:
Sensor: Aged linear thermistor
(Yellow Springs Instrument Co. Type 44202).
Range: -5 to +45 degrees C.
Accuracy: +/- 0.25 Degree C.
Resolution: +/- 1/64 Degree C.
Thermal time constant: < 2 MINUTES

Conductivity:
Sensor: Inductive Toroid
Range: 0 to 75 mS/cm.
Accuracy: +/- 2.5 mS/cm.
Resolution: +/- 0.1 mS/cm.

Pressure:
Sensor: Strain gauge.
Range: 0 to 10,000 p.s.i.
Accuracy: +/- 0.5%
Resolution: t/- 0.1%

Internal clock:
Type: Quartz crystal.
Accuracy: +/- 0.1 second/day
Outputs: Trigger pulses. Date and time information.
Power: Lithium battery independent. of meter's main battery. Battery life: 5 years.

Sampling interval:
Selected by IO-position switch.
Available intervals: 7.5, 15, 30, 60 seconds,
2, 5, 10, 20, 30, 60 minutes.

Burst sampling:
Samples per burst selected by 6-position switch;
2, 4, 8, 16, 32 samples per burst.
Burst interval selected by 4-position switch;
2, 4, 8, and 16 seconds.

Data capacity:
Cartridges are available in nominal capacities of 64, 128, 256 and 512 kilobytes. Each data record in the

meter is stored as a 13-byte word. In addition, 13 bytes are used to store the instrument serial number together with some information used internally by the meter itself. Taking as an example a 128 kbyte cartridge, we can now calculate its capacity in terms of data records. The actual size of the cartridge is 131,072 bytes. This leaves 131,059 bytes for useful data, which is equivalent to 10,081 complete data records. The corresponding figures for the other sizes 5,040, 20,163 and 40,328 data records. The largest capacity cartridge, therefore, allows recording once every ten minutes for almost a full year.

Data translation:
Using Model 6011RR reader with desk-top computer (e.g., I.B.M. *P. C. or compatible).

Battery:
Two D-size lithium cells with capacity of 14 amp-hours.
output: 7.8 volts
Life: up to one year, depending on operating mode.

Pressure case dimensions:
Length: 54.9 cm. Diameter: 10.5 cm.

Weights:
In air: 9/0 Kg. In water: 4.5 Kg.

Pressure Seal:
Single O-ring.
Tool-free opening and closing using General Oceanics' standard plastic cord sealing system.

Exposed material:
Plastic and hard-coat anodized dichromate sealed aluminum.

Wing characteristics:
Low speed: 0 to 70 cm/sec.
Standard: 0 to 225 cm/sec.
High speed: 0 to 300 cm/sec.

10 MOORING METHODS

Fig's. 4 and 5 illustrate possible ways of deploying the Model 6011 MkII current meter. Its lightness and compactness considerably ease the expense and difficulty of designing moorings. In deep-sea moorings, especially, the savings are enhanced by the reduced requirements in flotation, anchor weight and cable size.

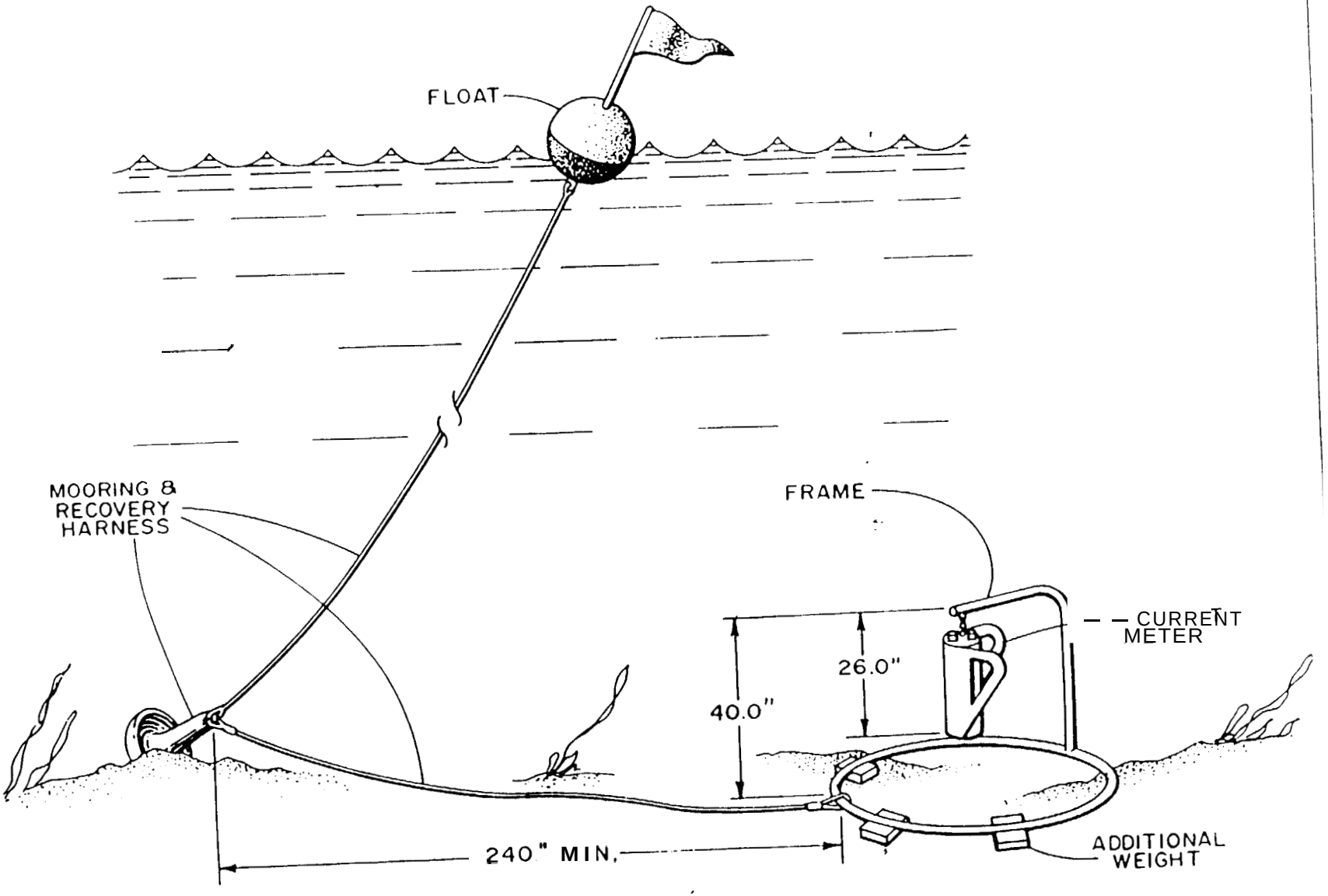

Fig. 4 Deployment for Near-Bottom Measurements

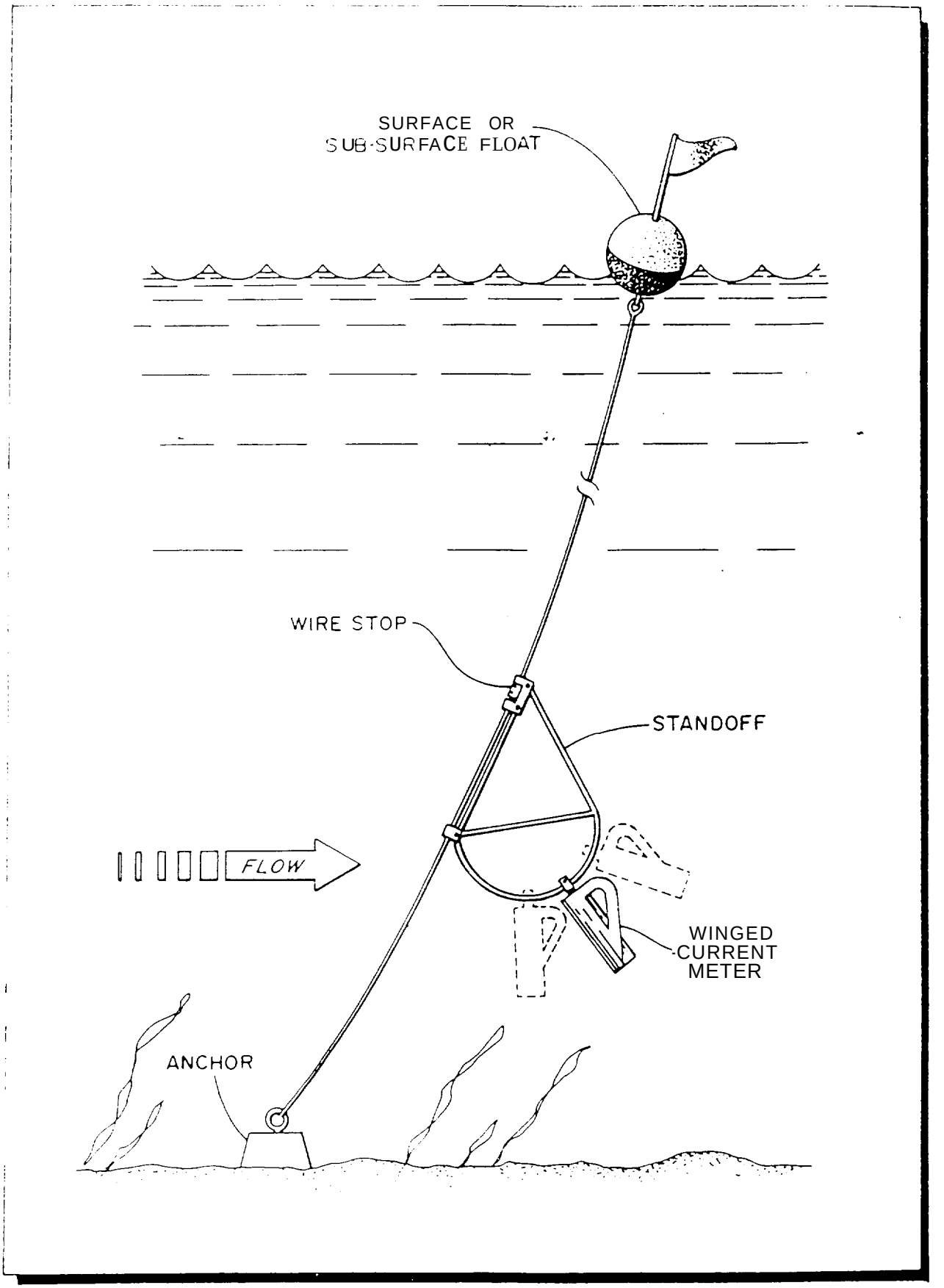

Fig.5 **Typical Deep-Sea Deployment**

11 CALIBRATION CURVES

On the following pages are six calibration curves showing tilt angle as a function of current speed for the low-speed, standard and high-speed fins. For each speed there are two curves. One is for meters that have no environmental sensors the other is for meters fitted with a conductivity sensor. The addition of a pressure sensor does not change either calibration curve. A temperature sensor is fitted to all model 6011 meters but since it is buried in the end cap, it too has no effect on the calibration curves.

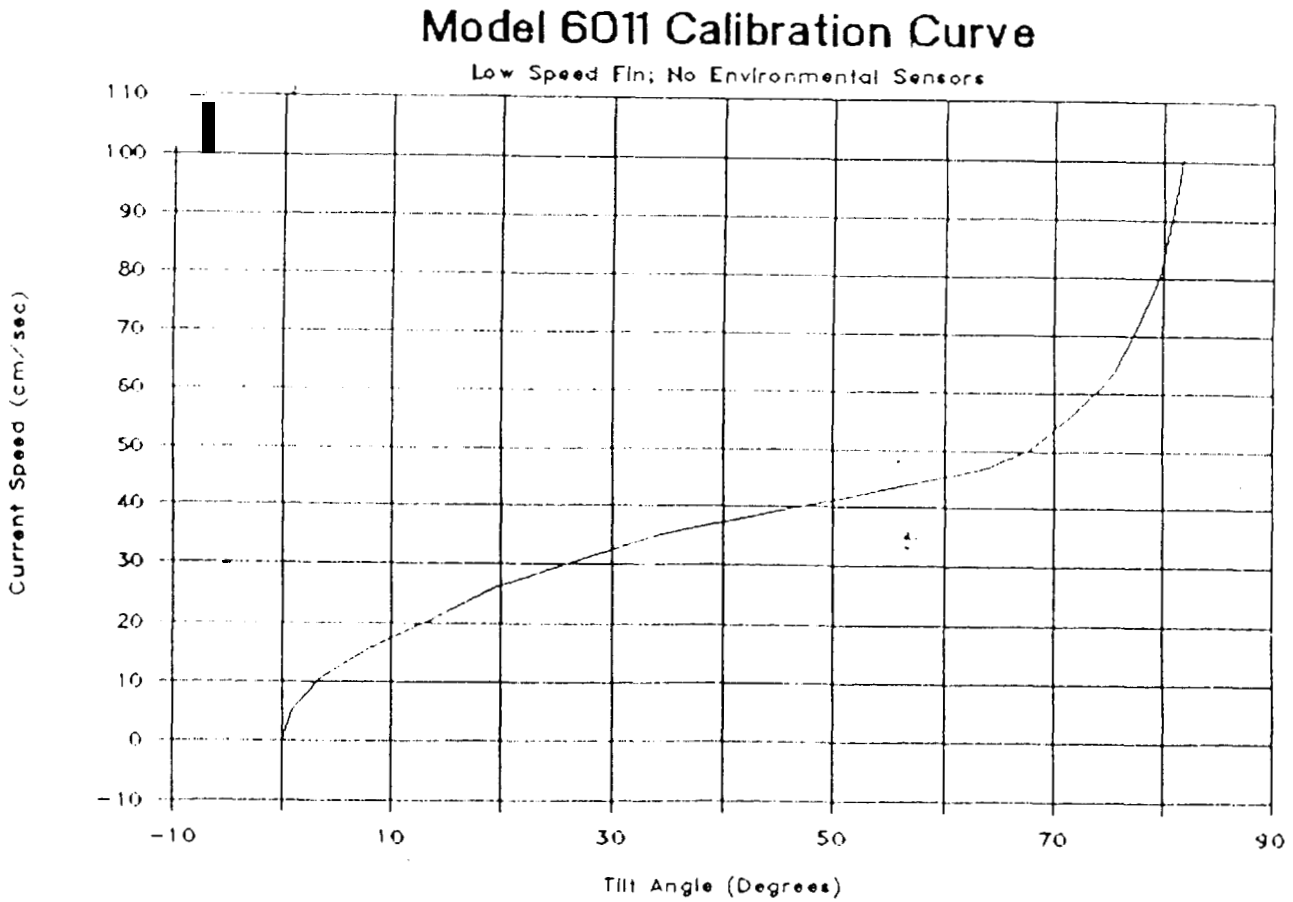

Fig.6 Calibration Curve
Low-Speed Fin: No **Environmental Sensors**

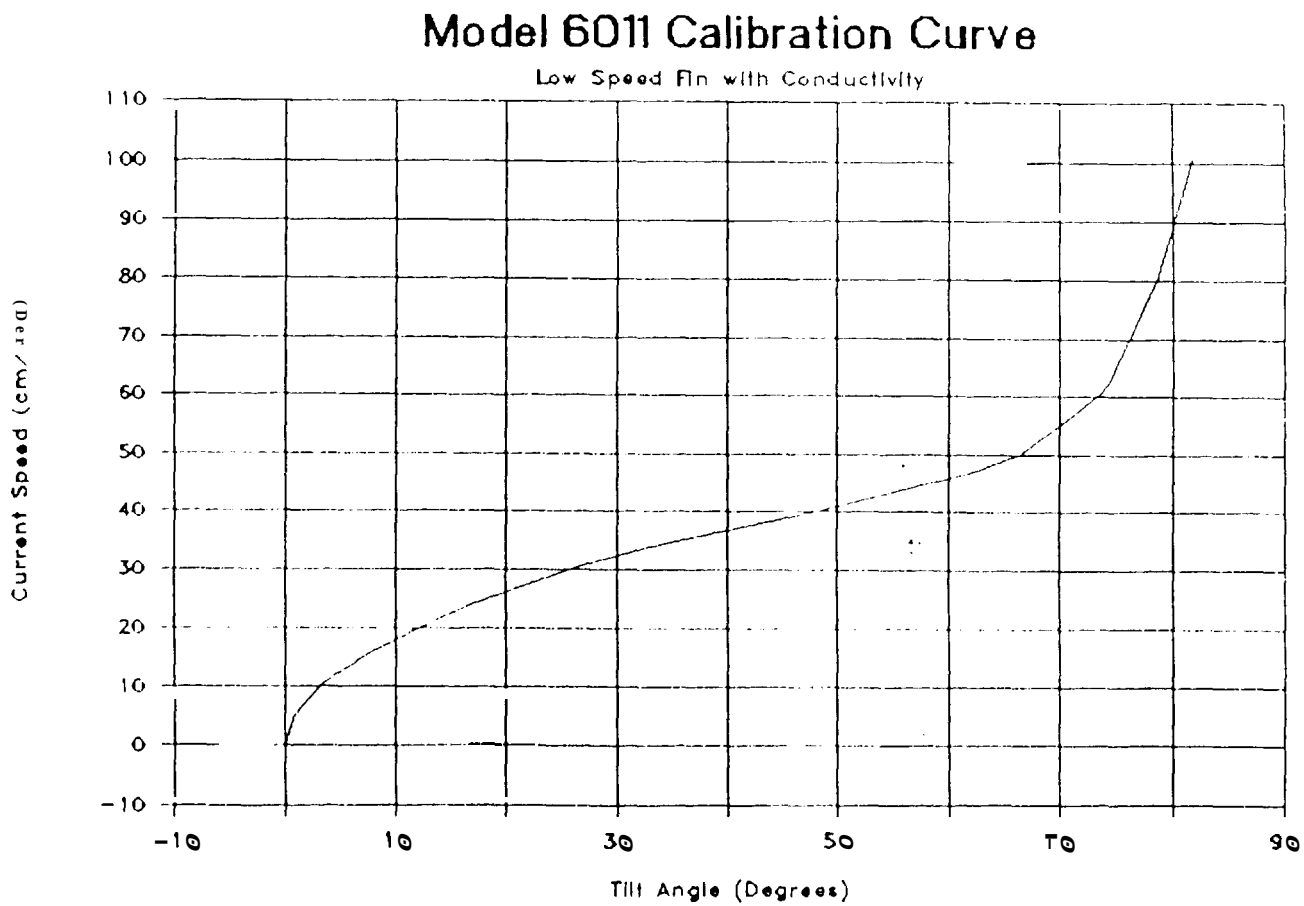

Fig. 7 Calibration Curve
Low-Speed Fin with Conductivity

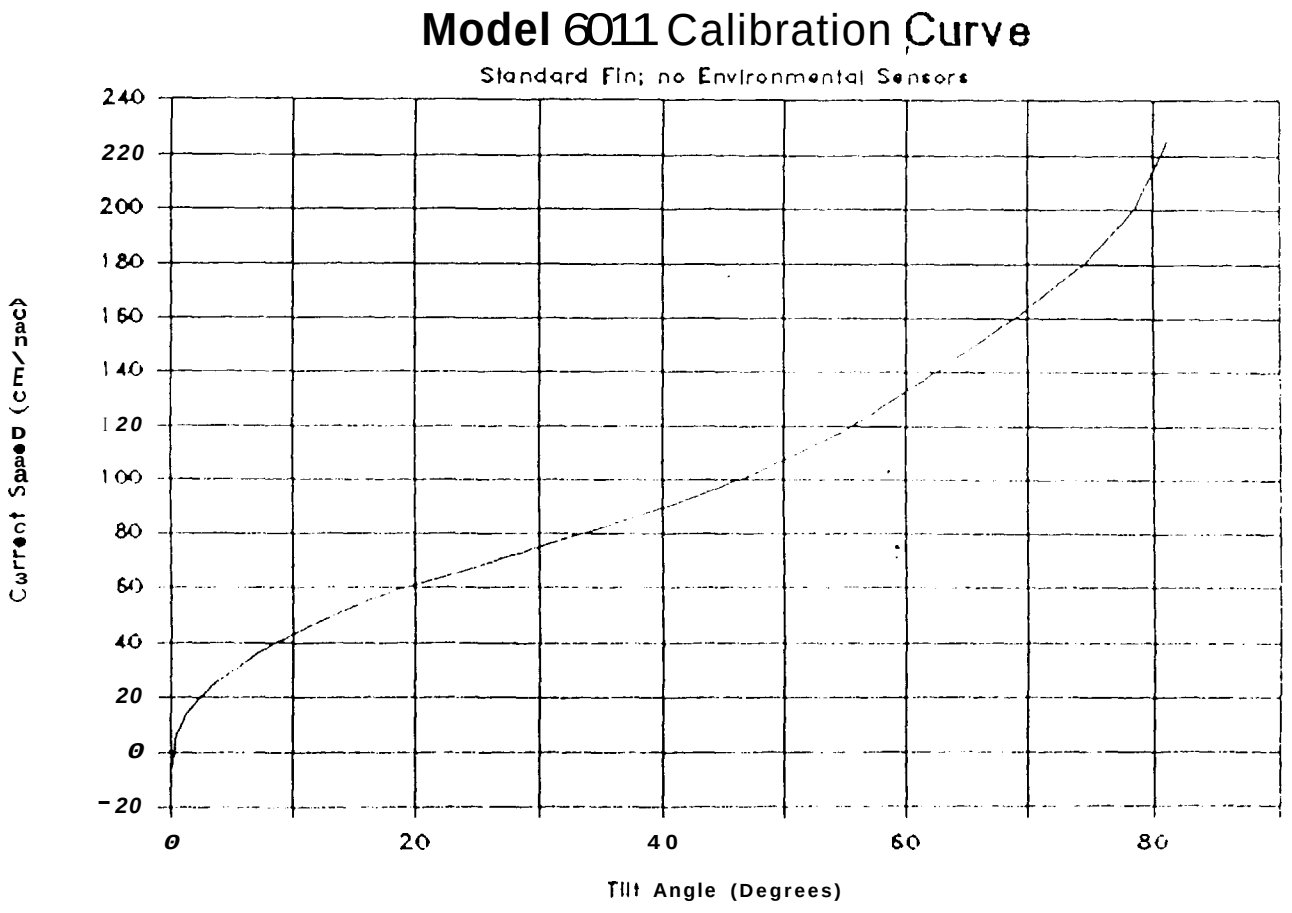

Fig.8 Calibration Curve
Standard Fin: No Environmental Sensors

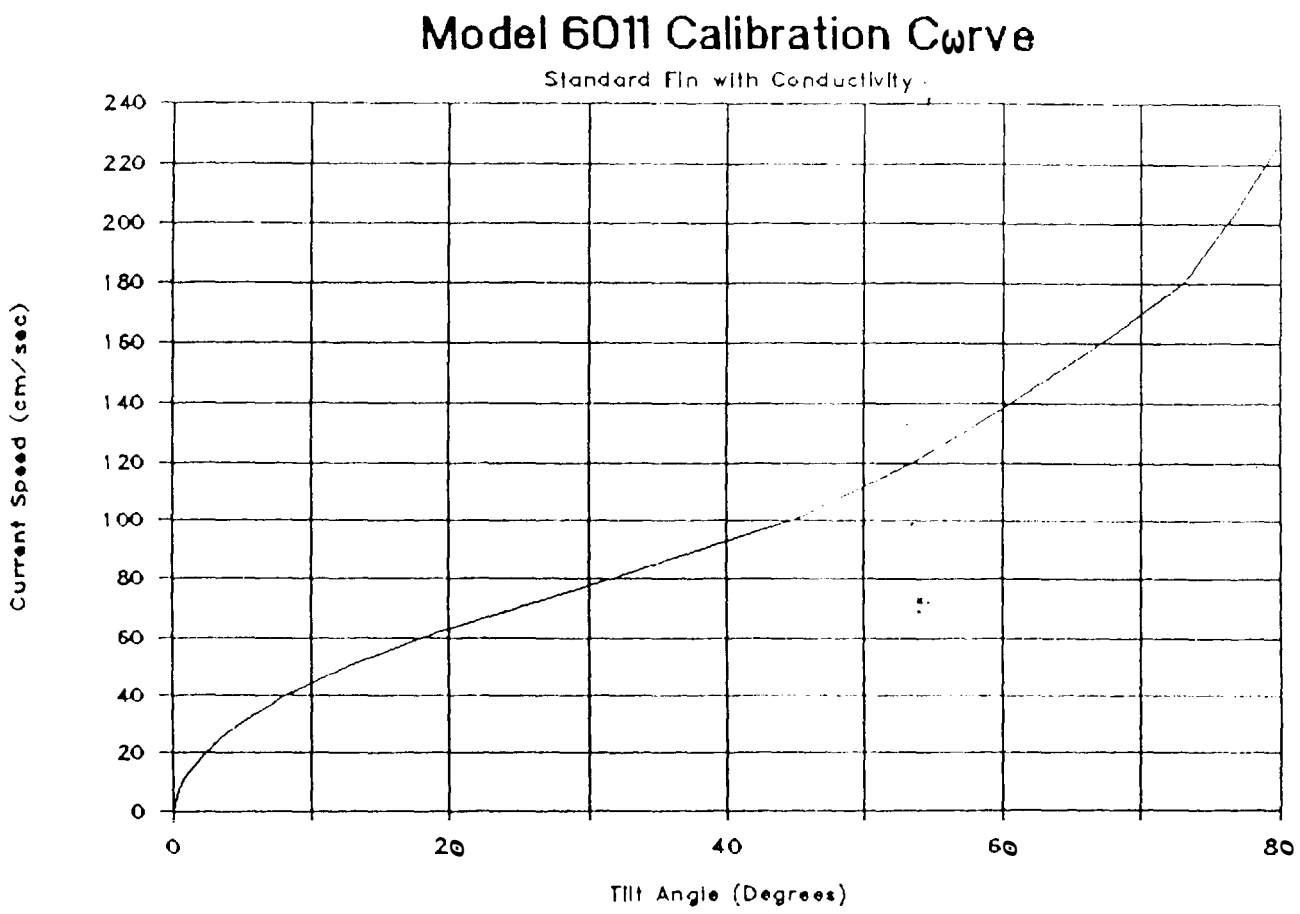

Fig. 9 Calibration Curve
Standard Fin with Conductivity

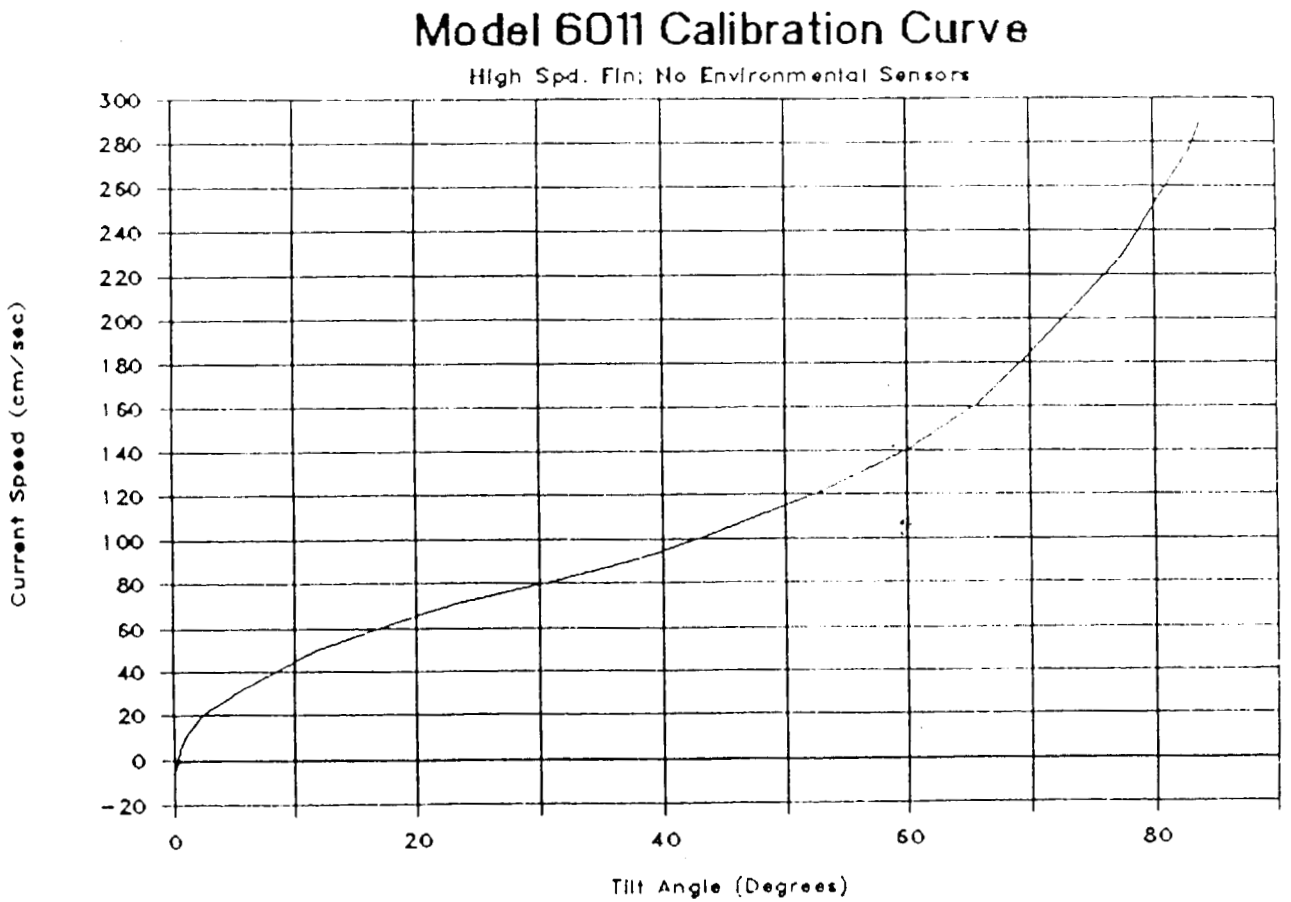

Fig. 10 Calibration Curve
High-Speed Fin: No Environmental Sensors

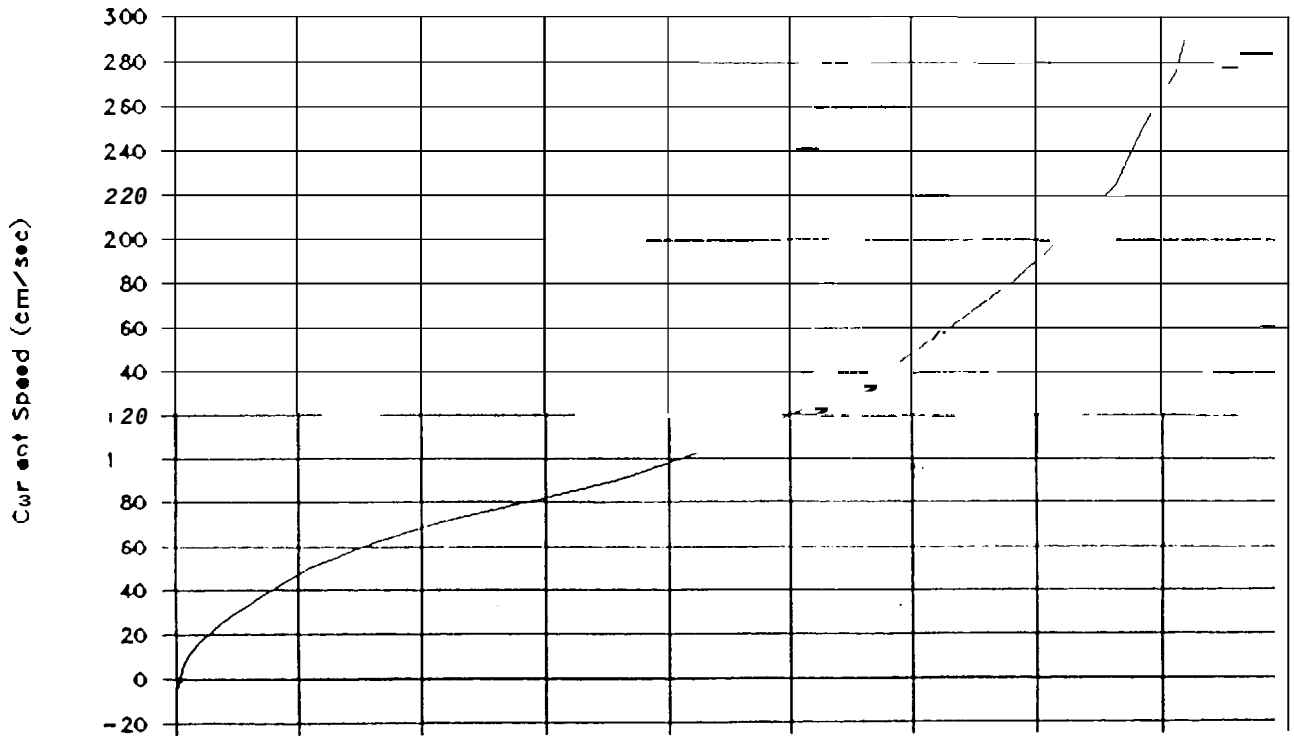

Fig.11 Calibration Curve
High-Speed Fin with Conductivity

12 MAINTENANCE

12.1 Routine Care

Because of its simple design, the Model 6011 requires very little in the way of routine maintenance. The main battery should be replaced as recommended in section 6.3.1 of this manual. The batteries in the real-time clock have a life of five years. Changing these batteries entails removing the protective covers and re-setting the clock using special equipment available only at the factory. For this reason, it is recommended that meters be returned to General Oceanics, Inc. when the clock batteries become due for replacement.

Before each deployment, lightly grease the O-ring seals and check them for damage. If there is any doubt about their integrity, they should be replaced. After a deployment, remove any marine growth, exercising special care in the region of the conductivity and pressure sensors, and thoroughly rinse the meter in fresh water. Remove the main battery and store it separately if the meter is left unused for more than a few weeks.

12.2 Antifouling Treatment

To protect it against marine growth during extended deployments, the meter can be treated with anti-fouling paint. The following procedure uses material which are readily available at boat supply stores and which are compatible with the aluminum of the pressure case and the plastics of the fins. The layers of paint have a negligible effect on meter calibration.

Step 1: Clean housing thoroughly with hot, soapy water and rinse. Allow to dry and wipe thoroughly with acetone to degrease surface.

Step 2: Remove the ABS wing from the current meter pressure housing. Then apply two thin coats of Pettit Metal Primer to the pressure housing, allowing at least 2 hours drying time between coats.

Step 3: Apply two thin coats of Pettit Vinyl Red Undercoater. This forms the prime barrier to protect the aluminum. It is important that two thin coats, instead of one thick one, be used to ensure total coverage of the aluminum. Also apply two coats of undercoater to the ABS wing to ensure better adhesion of the antifouling coating. Remember to leave at least 2 hours between coats. If possible, apply the undercoater with a sprayer. For thinning and cleaning use Pettit # 140 Vinyl Thinner.

Step 4: Applying the antifoulant. Pettit Alumiguard is recommended because of its compatibility with aluminum. The current meter may be painted then shelved for up to 3 months without the treatment loosing its effectiveness. Two or more

thin coats should be applied; if expected use is in a high growth area put on up to 5 thin coats. Recoat time is from 1 to 4 hours. Wait at least 16 hours after the last coat before immersion. Remember to coat the wing when using the antifoulant. Pettit # 140 Vinyl Thinner is used to thin the paint and for cleanup.

12.3 Spare Parts

The following are the General Oceanics reference numbers to the more frequently used spare parts.

Item	G.O. Reference #
Standoff	6011SO
Wire Stop	6011WS
O-ring	81-0153
Desiccant bag	99-0611
Cable tie - fin	48-1225
High-speed wing	6011000004
Low-speed wing	6011000003
Standard wing	6011000002
Battery	6011BL

GENERAL OCEANICS

MODEL 5011 RR

RAM READER

OPERATING MANUAL

JANUARY 1991

A COPY OF THIS MANUAL IS INCLUDED ON YOUR FLOPPY DISK

INC. • 1295 N.W. 163rd Street, Miami, Florida 33169-9922 • Tel.: (305) 621-2882 Telex: 80-8247 Fax: (305) 621-1710

GENERAL OCEANICS

CONTENTS

1 INTRODUCTION
- 1.1 Function

2 INSTALLATION
- 2.1 Component Parts
- 2.2 Hardware Installation
  - 2.2.1 Base Address Selection
  - 2.2.2 PIO Card Installation
  - 2.2.3 System Assembly
- 2.3 Software Installation
  - 2.3.1 Introduction
  - 2.3.2 Running SETUP
  - 2.3.3 Reading Data
  - 2.3.4 Examining Data

3 DATA FORMAT
- 3.1 Common Features
- 3.2 Model 6011E Inclinometer
- 3.3 Model 6011 Mk11 Current Meter
- 3.4 Model 6070 Data Logger
- 3.5 Model 6051 Pressure Gauge

INC. • 1295 N.W. 163rd Street, Miami, Florida 33169-9922 • Tel.: (305) 621-2882 Telex: 80-8247 Fax: (305) 621-1710

1 INTRODUCTION

1.1 Function

The General Oceanics Model 6011RR RAM Reader is designed to read the data cartridges used on the 6000 series of oceanographic recording instruments. These data cartridges contain banks of CMOS memory chips together with a lithium battery which allows them to retain recorded data for over ten years. The Reader plugs into an IBM PC/XT, or compatible, desktop computer. Data are taken from the cartridge, displayed on the computer screen, and recorded on a disk file. The user can then access the file and carry out any further processing he wishes.

2 INSTALLATION

2.1 Component Parts

The Model 6000RR is shipped as a package of four items:

1. The RAM Reader main unit. This holds the socket into which is plugged the data cartridge.

2. An interface card which plugs into one of the expansion slots in the IBM PC/XT. (MetraByte Corp. Model PIO-12)

3. A ribbon cable with 37-pin connectors to connect items 1 and 2.

4. The floppy disk containing the operating and installation software.

2.2 Hardware Installation

2.2.1 Base Address Selection

The IBM PC/XT accesses the interface card by way of four consecutive address locations in the PC 1/0 address space. These addresses start at a base address which is selected by an 8-position DIP switch (see Fig.1). The base address can in theory be placed anywhere in the 1/0 address space, but base addresses below FF hex (255 decimal) should be avoided as this address range is used by the internal 1/0 of the computer. The 200-3FF hex (512-1023) address range provides extensive unused areas of 1/0 space, though you should check with page 2-23 of the "Technical Reference Manual" for possible conflicts with commonly installed peripherals.

```
        9 8 7 6 5 4 3 2
      ------------------
ON          * * * * * *
/\    ¦ ¦ ¦ ¦ ¦ ¦ ¦ ¦
¦¦    * *
      ------------------
```

Fig.1 Base address switch setting for 300 hex (768 decimal)

TABLE I. Switch Position Address Equivalents.

Switch posn.	Address line	Decimal equivalent
9	A9	512
a	A8	256
7	A7	128
6	A6	64
5	A5	32
4	A4	16
3	A3	8
2	A2	4

Switches have decimal values as shown above, in the "off" 'position. In the "on" position the decimal value is zero.

Conflict with other peripherals that may be installed often manifests itself as erratic data displayed on the screen, in which case a different base address should be selected.

2.2.2 PIO Card Installation

Turn off the computer, disconnect the power cords, and move it so that you can work on it from the back. Open the computer and remove the screw holding the filler plate that is in line an empty expansion slot. Remove the filler plate and plug the interface card into the slot making sure it is seated firmly in the connector. Finally, secure the card bracket with the screw that was removed earlier, and return the computer to its case. You can now proceed to install the software.

2.2.3 System Assembly

Position the RAM Reader main unit alongside the computer for convenient access. Use the 37-way ribbon cable to connect it to the interface card in the computer.

2.3 Software Installation

2.3.1 Introduction

The diskette supplied with the RAM Reader contains a number of programs and files. MANUAL.DOC contains the text for this manual. The second is a program labelled SETUP; it allows the user to select which disk drive will be used to store the data that is read from the RAM cartridge. It also tells the actual reading programs the base address that has been selected on the interface card. The remaining files contain the programs which control the reader and format the data (e.g. RDCM will read the RAM cartridge from a MKII Current Meter). These programs are all very similar and differ only because different instruments in the 6000 series use slightly different data formats (see Section 3).

2.3.2 Running SETUP

First you should make a working copy of the software disk supplied, using the normal DOS commands. The original disk can then be stored as a back-up.

At this stage it is worth giving some thought to the general arrangement of your data handling system. The overall aim is to transfer data from the RAM cartridge to a disk file on either a floppy or hard disk. Once in a disk file the data can be accessed much more quickly and conveniently than by re-reading the cartridge. For a system with two floppy disks, it will normally be most convenient to run the program disk in drive A: and to store the transcribed data on a separate disk in drive B:. With a

hard disk system, running the program on the hard disk - drive C: - and storing data on a floppy disk in A: may be best.

Whatever arrangement you use, transfer all the files on the General Oceanics disk to the selected drive, either by inserting the floppy disk in the drive or by copying them to drive C:. Then make the selected drive the default drive (e.g. if C: then type 'C:' followed by RETURN). Then type 'SETUP' followed by RETURN. After a few seconds you will see the introductory banner followed by a prompt to select the data storage disk drive. Make your selection, following the guidelines in the opening remarks of this section.

The next prompt calls for the entry of the base address which you have already selected on the DIP switch on the interface card. Enter this address as a decimal number.

Once you have entered these two pieces of information they are stored in a file SETUP.DAT on the default drive. There is no need to run the SETUP program again unless you wish to change these initial conditions.

2.3.3 Reading Data

To read data, type the appropriate program name followed by RETURN. The program name can be found in Section 3, DATA FORMAT, under the name of the instrument on which the data were recorded. For example, if data were recorded on a Model 6011 MK IT current meter, then the program to use is RDCM.

The program will start by displaying the following information:

a. The serial number of the recording instrument.

b. The number of samples stored in the cartridge.

c. The disk drive being used for data storage,

The program will issue a warning if you attempt to read data without a cartridge plugged into the reader, or if the reading program does not match the recording instrument i.e. if you try to read Current meter data with the Inclinometer program.

To proceed, follow the prompts as they appear on the screen. Reading will continue until all the samples have been read or until you reach the last address in the cartridge.

The default read operation will display the date/time group and the orientation sensor data on the screen along with the number of samples. Using the "h" key to halt the process other options become available.

They include:

"s" - to start the read process at the beginning of the cartridge (re-starting will write over previously stored file!) ;
"c" - to continue process at present position (always continues in default mode);
"o" - to display the environmental sensors (instead of orientation data) continuing from present position;
"b" - blanks the screen while processing (speeds up operation considerably);
"e" - terminate processing at present position.

Since the generated file is an ASCII delimited file it can reach quite a size with respect to the number of bytes. If you have designated a floppy drive as the storage drive then the program will pause after each group of 5000 readings to allow you to change diskettes if necessary. Hard disks 'C' through 'F' will continue to write the data until the cartridge end is reached.

The following table will help to determine the correct floppy disk size and whether to replace it or to continue:

Cartridge Size	Readings Available	Size of file (bytes)	Disk size
64K	5,000	300,000	360K min.
128K	10,000	600,000	720K min.
256K	20,000	1,200,000	1.2Meg. min.
512K	40,000	2,400,000	10Meg. Hard drive

(The above examples are for a MKII Current Meter which averages about 60 bytes per reading).

2.3.4 Examining Data

The data file (e.g. CM2DAT.DAT) can be viewed using a number of different methods. DOS utilities MORE, TYPE, EDLIN and PRINT are bottom line methods of viewing, editing and printing the data. Any word processor capable of handling ASCII files can be used also. The file can also be imported into any number of spreadsheet and database environments available commercially.

Section 3 of this manual gives the data format and respective column designations for instruments in this series.

3 DATA FORMAT

3.1 Common Features

The format of the data displayed on the screen will vary from instrument to instrument. However, certain features remain common through out the range. Columns 1 through 4 are used to display the month, day, hour and minute recorded by the instrument's real-time clock. The last column is the sequential sample number. The columns in between display data as described in the sub-sections relating to each instrument.

Data are recorded on the disk file in essentially the same format as the display except that there are no spaces and no column headings. Data values are separated by commas and each line is terminated by a carriage return.

3.2 Model 6011U Inclinometer

The program to read data from Model 6011U Inclinometers is RDINC. For a Model 6011UP (an inclinometer fitted with a pressure sensor) use RDINCP.

The file used to store cartridge data is INCDAT.DAT.

Data are stored on disk as twelve columns. The first four and the twelfth are as described in Section 3.1. Column 5 is used to store pressure as a percentage of the sensor's full scale reading. Column 6 stores temperature in degrees Centigrade. Column 7 represents conductivity in units of milliseimans/meter.

Columns 8 and 9 are used to store tilt angle (relative to the vertical) and tilt direction (relative to magnetic north), both in degrees.

Alternatively, columns 8 and 9 can be used to store tilt information in Cartesian form as easterly and northerly components. These components are derived, in principle, as follows. First the tilt angle is converted to its trigonometric sine - a number in the range zero to 1. Then, this number is

multiplied by the sine of the direction angle to obtain the easterly component. Similarly, the northerly component is sin(tilt) multiplied by cos(direction). We end up, therefore, with numbers in the range -1 to +1. On this scale -1 in the column 9 would represent 90 degrees of tilt to the south. The Cartesian representation has an advantage, in some applications, of allowing tilt angles to be handled vectorially.

The tenth and eleventh columns are values of the standard deviations of the two tilt components.

If conductivity or pressure sensors are not fitted to the inclinometer, dummy data will be stored in the corresponding columns on the disk.

3.3 Model 6011 MkII Current Meter

The program to read data from the Model 6011 MkII Current Meter is RDCM.

The file used to store cartridge data is CM2DAT.DAT.

Data are displayed in 12 columns as follows:

Column	Data
1	Month
2	Day
3	Hour
4	Minute
5	Pressure (as % FSD of sensor)
6	Temperature (deg. C.)
7	Conductivity (mS/m)
8	East-West current (cm./sec.)
9	North-South current (cm./sec.)
10	E-W Std. Devn. (cm./sec.)
11	N-S Std. Devn. (cm/sec.)
12	Sample Number

3.4 Model 6070 Thermograph

The program to read data from the Model 6070 Thermograph is RDPTC.

The file used to store cartridge data is DATLOG.DAT

Data are displayed in 8 columns as follows:

Column	Data
1	Month
2	Day
3	Hour
4	Minute
5	Pressure
6	Temperature
7	Conductivity
8	Sample Number

3.5 Model 6051 Pressure Gauge

The program used to read cartridges from the Model 6051 Pressure Gauge is RDPG.

Data are stored in DATLOG.DAT.