N00204.AR.005032
NAS PENSACOLA
5090.3a

START UP CERTIFICATION AND AS BUILT DRAWINGS FOR GROUNDWATER PRETREATMENT SYSTEM NAS PENSACOLA FL
07/01/1996
RUST ENVIRONMENTAL & INFRASTRUCTURE INC

Quality • Integrity • Creativity • Responsiveness

RUST

START-UP CERTIFICATION AND AS BUILT DRAWINGS FOR GROUNDWATER PRETREATMENT SYSTEM

NAVAL AIR STATION PENSACOLA, FLORIDA

Rust Environment & Infrastructure

START-UP CERTIFICATION
AND
AS BUILT DRAWINGS
FOR GROUNDWATER
PRETREATMENT SYSTEM

NAVAL AIR STATION
PENSACOLA, FLORIDA

Prepared For

SOUTHERN DIVISION
NAVAL FACILITIES ENGINEERING COMMAND

CONTRACT NO. N62467-93-D-0062
DELIVERY ORDER NO. 0061

Rust Project No. 37122.000
July 1996

Prepared By
RUST ENVIRONMENT AND INFRASTRUCTURE
2694 Lake Park Drive
North Charleston, South Carolina 29406
803/572-5600

RUST Rust Environment & Infrastructure Inc.

A Rust International Company
2694 Lake Park Drive
North Charleston, SC 29406

Phone 803.572.5600
Fax 803.572.5661

August 1, 1996

Southern Division
Naval Facilities Engineering Command
Attn: Code 18213 (Maxie Keisler)
P.O. Box 190010
North Charleston, SC 29419-9010

Re: Start-up Certification and As Built Drawings
Groundwater Pretreatment System
Naval Air Station Pensacola
Pensacola, Florida
Rust Project No. 37122.000

Dear Mr. Keisler,

The Groundwater Pretreatment System was put into operation on May 30, 1996. At 0835 hours the Air Stripper was placed on line followed by Recovery Wells 1,2,3, 5A and 7.

The air stripper unit was tested by simulating a high water level which resulted in the air stripper automatically shutting off power to all pump stations as specified in the "Performance Level Design and Specifications for Groundwater Pretreatment System," July 1995 (hence, "Specifications"). Both high and low air pressure were then simulated at the stripper. In both cases the results were that the power to all pump stations was shut-off, however the blower motor did not cease to operate as required in the Specifications. The Resident Officer in Charge of Construction (ROICC) was advised that the blower would continue to operate under high or low air pressure conditions. Because untreated water would not be discharged to the wastewater treatment plant due to this discrepancy, the ROICC representative made the decision to keep the system on-line. To my knowledge, the system has not been modified to correct this discrepancy. Recovery Wells 4 and 6 were then started and put on-line.

Subsequently, minor difficulties occurred including a leak on the effluent line from RWs 1,2 and 3, and an inoperative flowmeter for RW 5A. The leak was repaired and the pumping from RWs 1,2 and 3 continued. However, pumping from RW 5A was discontinued until the flow meter could be fixed or replaced.

Influent and effluent samples were collected in the morning (approximately 8:00 a.m.) and

the afternoon (approximately 2:00 p.m.) of May 31, 1996. These samples were analyzed for Total Volatiles by method SW 846 8260. The analyses were conducted by the Navy Public Works Center Environmental Laboratory and the analytical laboratory reports are given in Attachment A. The constituents detected are summarized in the following table with concentration levels seen in the influent and effluent for both sampling events.

	Morning Sample		**Afternoon Sample**	
Constituent	**Influent µg/l**	**Effluent µg/l**	**Influent µg/l**	**Effluent µg/l**
Chlorobenzene	67	BDL	45	BDL
2-Chlorotoluene	3	BDL	2	BDL
1,2-Dichlorobenzene	82	BDL	47	BDL
1,3-Dichlorobenzene	48	BDL	32	BDL
1,4-Dichlorobenzene	59	BDL	37	BDL
1,1-Dichloroethane	6	BDL	4	BDL
1,1,2-Trichloro-1,2,2-Trifluoroethane	4	BDL	2	BDL

BDL = Below Detection Limits

Based on this information, I certify the Start-up of the Groundwater Pretreatment System, Naval Air Station Pensacola, Pensacola, Florida. As Built Drawings are given in Attachment B.

Sincerely,

James L. Brickell, Ph.D., P.E.
Project Engineer
Florida P.E. No. 47202

Attachment A: Laboratory Analytical Reports
Attachment B: As Built Drawings

c: Mr. Tom Kelley - NAS Pensacola
Mr. Bill Taylor - NAS Pensacola

P:\WP\37122\asbilt.wpd/lc

8/5/96

Attachment A
Laboratory Analytical Reports

HAZARDOUS WASTE CHAIN OF CUSTODY/REQUEST FOR ANALYSIS

NPWC Environmental Laboratory
Bldg. 3887, Code 920
NAS Pensacola, Fl. 32508
Ph#: (904) 452-4726/3842
DSN: 922-4726/3842
FAX: (904) 452-2799/2387

Requester: Rust EVI
Address: Charleston S.C.
Phone #: 803 572-5600
Contact: Scott Ross / Tom Kelly
Job Order #: 1204-063

Report Required? Yes No DEP? Yes No
Lab ID Number:
Sample Date: 5/31/96
Received Date:
Sample Site:
Lab Due Date:

Sample ID #	Lab	#1- 6-2422	#2- 6-2423	#3-	#4-
Sample Name	----------	WWTP INF	WWTP EFF		
or Location	----------	Bldg 3297	Bldg 3297		
Sampled by	----------	C Tucker	C Tucker		
Collection	Date	5/31/96	5/31/96		
Date/Time	Time	1000	1005		
Sample Matrix	----------	water	water		

Notes: #1 INFluent #2 EFFluent RUSH

GROUP PARAMETERS by Method Name	METHOD #	X	Bottle ID #'s	X	Bottle ID #'s	X	Bottle ID #'s	X	Bottle ID #'s	Billing Units	Containers Required (L/S)	Preservative(s) Used (Liquids)
HW Charact. (complete)	EPA SW 846									80	See below	See below
Ignitability (Flashpoint)	SW 846 1010									2	250ml/4 oz.	4° C
Reactivity (Cyanide & Sulfide)	EPA SW-846									4	1L/4 oz	4° C
Corrosivity (pH)	SW 846 9040/9045									1	250ml/4 oz.	4° C
Toxicity (TCLP) complete	EPA SW-846									55	See below	See below
Toxicity (TCLP) complete	EPA SW-846									55	See below	See below
TCLP Non Volatile Extraction	SW 846 1311									5	40 ml x 1/4 oz	4° C
TCLP Volatile ZHE Extraction	SW 846 1311									5	1Lx4/32 oz.	HCl to pH<2/4° C
TCLP BNA Extractables	SW 846 8270									18	1L x3/4 oz	4° C
TCLP Acid Extractables	SW 846 8270									10	1Lx3/4 oz	4° C
TCLP B/N Extractables	SW 846 8270									10	1L x3/4 oz.	4° C
TCLP Pesticides	SW 846 8080									10	1L x3/4 oz	4° C
TCLP Herbicides	SW 846 8150									10	1L x3/4 oz	4° C
TCLP Volatiles	SW 846 8260									8	40 ml x 3/4 oz	HCl to pH<2/4° C
TCLP Metals (8)	EPA SW-846									7	500 ml/4 oz	HNO_3 to pH<2
Complete Priority Pollutants	EPA SW-846									42	See below	See below
PP Acid Extractables	SW 846 8270									10	1Lx3/4 oz.	4° C
PP B/N Extractables	SW 846 8270									10	1L x3/4 oz	4° C
PP Pesticide/PCB's	SW 846 8080									10	1Lx3/4 oz.	4° C
PP Volatiles	SW 846 8260									8	40 ml x 3/4 oz.	HCl to pH<2/4° C
PP Metals (13)	EPA SW-846									9	500 ml/4 oz	HNO_3 to pH<2
PP Cyanide/Phenol	EPA SW-846									4	1L Plastic/1L Glass	$NaOH/H_2SO_4$
Toxicity (TCLP) less Pest/Herb	EPA SW-846									40	See below	See below
F001 - F005 Solvents	EPA SW-846									28	1Lx2/40ml x 1/4 oz	4° C
Total Volatiles	SW 846 8260	X	1, 2, 3, 4	X	1, 2, 3, 4					9	40 ml x 3/4 oz	HCl to pH<2/4° C
Total BNA Extractables	SW 846 8270									18	1Lx2/16 oz.	4° C
Total RCRA Metals (8)	EPA SW-846									7	500 ml/4 oz	HNO_3 to pH<2
PCB's in Oil	SW 846 8080									3	40 ml/4 oz	None
PCB's in Water/Soil/Wipes	SW 846 8080									4	1L/4 oz	None
Other:												

Comments: Samples collected from an stripper pointed in the WWTP.

Relinquished by: Charles [illegible]
Date/Time: 5/31/96 1015

Received by: J W Moore
Date/Time: 5-31-96 1015

Navy Public Works Center
Environmental Laboratory

Bldg. 3887, Code 920
NAS Pensacola, FL 32508 - 6500
Phone (904) 452-4728/3642
DSN 922 4728/3642

Client: Rust Environmental
Address: Charleston, SC
Phone: 803-572-5600
Contact: Scott Ross/ Tom Kelly

Analytical Report
Volatiles by Method 8260

Lab Report Number: 62422_3
Sample Date: 05/31/96
Received Date: 05/31/96
Sample Site: NASP Bldg 3297
Job Order No.: 120 4063

LAB Sample ID#	1- 62422			2- 62423		
Sample Name / Location	WWTP Airstripper Influent			WWTP Airstripper Effluent		
Collector's Name	P. Keane			P. Keane		
Date & Time Collected	05/31/96 @ 1000			05/31/96 @ 1005		
Sample Type (composite or grab)	Grab			Grab		
Analyst	J. Moore			J. Moore		
Date of Extraction / Initials	05/31/96 / JWM			05/31/96 / JWM		
Date of Analysis	05/31/96			05/31/96		
Sample Matrix	GW			GW		
Dilution		X	1		X	1
COMPOUND NAME	1- 62422	units	Det. Limit	1- 62423	units	Det. Limit
Benzene	27	UG/L	1	BDL	UG/L	1
Bromobenzene	BDL	UG/L	1	BDL	UG/L	1
Bromochloromethane	BDL	UG/L	1	BDL	UG/L	1
Bromodichloromethane	BDL	UG/L	1	BDL	UG/L	1
Bromoform	BDL	UG/L	2	BDL	UG/L	2
Bromomethane	BDL	UG/L	3	BDL	UG/L	3
n-Butylbenzene	BDL	UG/L	1	BDL	UG/L	1
sec Butylbenzene	BDL	UG/L	1	BDL	UG/L	1
tert-Butylbenzene	BDL	UG/L	2	BDL	UG/L	2
Carbon Tetrachloride	BDL	UG/L	1	BDL	UG/L	1
Chlorobenzene	67	UG/L	1	BDL	UG/L	1
Chloroethane	BDL	UG/L	1	BDL	UG/L	1
Chloroform	BDL	UG/L	1	BDL	UG/L	1
Chloromethane	BDL	UG/L	1	BDL	UG/L	1
2-Chlorotoluene *	3	UG/L	1	BDL	UG/L	1
4-Chlorotoluene *	BDL	UG/L	1	BDL	UG/L	1
Dibromochloromethane	BDL	UG/L	1	BDL	UG/L	1
1,2 Dibromo-3-chloropropane *	BDL	UG/L	5	BDL	UG/L	5
1,2 Dibromoethane	BDL	UG/L	1	BDL	UG/L	1
Dibromomethane	BDL	UG/L	3	BDL	UG/L	3
1,2-Dichlorobenzene	82	UG/L	1	BDL	UG/L	1
1,3-Dichlorobenzene	48	UG/L	1	BDL	UG/L	1
1,4-Dichlorobenzene	59	UG/L	1	BDL	UG/L	1
Dichlorodifluoromethane	BDL	UG/L	1	BDL	UG/L	1
1,1-Dichloroethane	6	UG/L	1	BDL	UG/L	1
1,2-Dichloroethane	BDL	UG/L	1	BDL	UG/L	1
1,1-Dichloroethene	BDL	UG/L	1	BDL	UG/L	1
cis 1,2-Dichloroethene	BDL	UG/L	1	BDL	UG/L	1
trans-1,2-Dichloroethene	BDL	UG/L	1	BDL	UG/L	1
1,2-Dichloropropane	BDL	UG/L	1	BDL	UG/L	1
1,3-Dichloropropane	BDL	UG/L	1	BDL	UG/L	1
2,2-Dichloropropane	BDL	UG/L	1	BDL	UG/L	1
1,1 Dichloropropene	BDL	UG/L	1	BDL	UG/L	1
Ethylbenzene	BDL	UG/L	1	BDL	UG/L	1
Ethyl ether *	BDL	UG/L	2	BDL	UG/L	2
Hexachlorobutadiene	BDL	UG/L	3	BDL	UG/L	3
2 Hexanone *	BDL	UG/L	1	BDL	UG/L	1
Isopropylbenzene	BDL	UG/L	1	BDL	UG/L	1
p-Isopropyltoluene	BDL	UG/L	5	BDL	UG/L	5

Navy Public Works Center
Environmental Laboratory
Bldg. 3887, Code 920
NAS Pensacola, FL 32508 - 6500
Phone (904) 452-4728 / -3642
DSN 922 3642

Client: Rust Environmental
Address Charleston, SC

Phone 803-572-5600
Contact Scott Ross/ Tom Kelly

Analytical Report
Volatiles by Method 8260

Lab Report Number: 62422_3
Sample Date: 05/31/96
Received Date: 05/31/96
Sample Site: NASP Bldg 3297
Job Order No.: 120 4063

COMPOUND NAME	62422	units	Det. Limit	62423	units	Det. Limit
Methylene Chloride	BDL	UG/L	5	BDL	UG/L	5
Methyl ethyl ketone (MEK) *	BDL	UG/L	5	BDL	UG/L	5
Methyl isobutyl ketone (MIBK) *	BDL	UG/L	5	BDL	UG/L	5
Naphthalene	BDL	UG/L	5	BDL	UG/L	5
n-Propylbenzene	BDL	UG/L	1	BDL	UG/L	1
Styrene	BDL	UG/L	1	BDL	UG/L	1
1,1,1,2-Tetrachloroethane	BDL	UG/L	1	BDL	UG/L	1
1,1,2,2-Tetrachloroethane	BDL	UG/L	1	BDL	UG/L	1
Tetrachloroethene	BDL	UG/L	1	BDL	UG/L	1
Toluene	BDL	UG/L	1	BDL	UG/L	1
1,2,3-Trichlorobenzene	BDL	UG/L	1	BDL	UG/L	1
1,2,4-Trichlorobenzene	BDL	UG/L	1	BDL	UG/L	1
1,1,1-Trichloroethane	BDL	UG/L	1	BDL	UG/L	1
1,1,2-Trichloroethane	BDL	UG/L	1	BDL	UG/L	1
Trichloroethene	BDL	UG/L	1	BDL	UG/L	1
Trichlorofluoromethane	BDL	UG/L	1	BDL	UG/L	1
1,1,2-Trichloro-1,2,2-Trifluoroethane *	4	UG/L	2	BDL	UG/L	2
1,2,3-Trichloropropane	BDL	UG/L	1	BDL	UG/L	1
1,2,4-Trimethylbenzene	BDL	UG/L	1	BDL	UG/L	1
1,3,5-Trimethylbenzene	BDL	UG/L	1	BDL	UG/L	1
Vinyl Chloride	BDL	UG/L	1	BDL	UG/L	1
m,p-Xylene	BDL	UG/L	1	BDL	UG/L	1
o-Xylene	BDL	UG/L	1	BDL	UG/L	1

SURROGATE SPIKE RECOVERIES

	Acceptance Limits	62422	62423
1,2 Dichloroethane-d4	75-133	125	121
Toluene-d8	86-119	102	100
Bromofluorobenzene	85-116	105	104

COMMENTS :

BDL = Below detection limit. UG/L = Microgram per liter. * = FL HRS certification pending

Approved by : Jim Taylor for J. Dees Date : 6/4/96

Navy Public Works Center
Environmental Laboratory

Bldg. 3887, Code 920
NAS Pensacola, FL 32508 - 6500
Phone (904) 452-4728/3642
DSN 922-4728/3642

Client: Rust Environmental
Address Charleston, SC
Phone 803-572-5600
Contact Scott Ross/ Tom Kelly

Analytical Report
Volatiles by Method 8260

Lab Report Number: 62435_6
Sample Date: 05/31/96
Received Date: 05/31/96
Sample Site: NASP Bldg 3297
Job Order No.: 120 4063

LAB Sample ID#	1- 62435			2- 62436		
Sample Name / Location	WWTP Airstripper Influent			WWTP Airstripper Effluent		
Collector's Name	P. Keane			P. Keane		
Date & Time Collected	05/31/96 @ 1400			05/31/96 @ 1405		
Sample Type (composite or grab)	Grab			Grab		
Analyst	J. Moore			J. Moore		
Date of Extraction / Initials	05/31/96 / JWM			05/31/96 / JWM		
Date of Analysis	05/31/96			05/31/96		
Sample Matrix	GW			GW		
Dilution	X 1			X 1		
COMPOUND NAME	1- 62435	units	Det. Limit	1- 62436	units	Det. Limit
Benzene	15	UG/L	1	BDL	UG/L	1
Bromobenzene	BDL	UG/L	1	BDL	UG/L	1
Bromochloromethane	BDL	UG/L	1	BDL	UG/L	1
Bromodichloromethane	BDL	UG/L	1	BDL	UG/L	1
Bromoform	BDL	UG/L	2	BDL	UG/L	2
Bromomethane	BDL	UG/L	3	BDL	UG/L	3
n-Butylbenzene	BDL	UG/L	1	BDL	UG/L	1
sec-Butylbenzene	BDL	UG/L	1	BDL	UG/L	1
tert-Butylbenzene	BDL	UG/L	2	BDL	UG/L	2
Carbon Tetrachloride	BDL	UG/L	1	BDL	UG/L	1
Chlorobenzene	45	UG/L	1	BDL	UG/L	1
Chloroethane	BDL	UG/L	1	BDL	UG/L	1
Chloroform	BDL	UG/L	1	BDL	UG/L	1
Chloromethane	BDL	UG/L	1	BDL	UG/L	1
2 Chlorotoluene *	2	UG/L	1	BDL	UG/L	1
4-Chlorotoluene *	BDL	UG/L	1	BDL	UG/L	1
Dibromochloromethane	BDL	UG/L	1	BDL	UG/L	1
1,2-Dibromo-3-chloropropane *	BDL	UG/L	5	BDL	UG/L	5
1,2-Dibromoethane	BDL	UG/L	1	BDL	UG/L	1
Dibromomethane	BDL	UG/L	3	BDL	UG/L	3
1,2-Dichlorobenzene	47	UG/L	1	BDL	UG/L	1
1,3-Dichlorobenzene	32	UG/L	1	BDL	UG/L	1
1,4-Dichlorobenzene	37	UG/L	1	BDL	UG/L	1
Dichlorodiflouromethane	BDL	UG/L	1	BDL	UG/L	1
1,1-Dichloroethane	4	UG/L	1	BDL	UG/L	1
1,2-Dichloroethane	BDL	UG/L	1	BDL	UG/L	1
1,1 Dichloroethene	BDL	UG/L	1	BDL	UG/L	1
cis-1,2-Dichloroethene	BDL	UG/L	1	BDL	UG/L	1
trans-1,2-Dichloroethene	BDL	UG/L	1	BDL	UG/L	1
1,2-Dichloropropane	BDL	UG/L	1	BDL	UG/L	1
1,3-Dichloropropane	BDL	UG/L	1	BDL	UG/L	1
2,2-Dichloropropane	BDL	UG/L	1	BDL	UG/L	1
1,1-Dichloropropene	BDL	UG/L	1	BDL	UG/L	1
Ethylbenzene	BDL	UG/L	1	BDL	UG/L	1
Ethyl ether *	BDL	UG/L	2	BDL	UG/L	2
Hexachlorobutadiene	BDL	UG/L	3	BDL	UG/L	3
2-Hexanone *	BDL	UG/L	1	BDL	UG/L	1
Isopropylbenzene	BDL	UG/L	1	BDL	UG/L	1
p-Isopropyltoluene	BDL	UG/L	5	BDL	UG/L	5

Navy Public Works Center
Environmental Laboratory
Bldg. 3887, Code 920
NAS Pensacola, FL 32508 - 6500
Phone (904) 452-4728 / -3642
DSN 922-3642

Client: Rust Environmental
Address Charleston, SC

Phone 803-572-5600
Contact Scott Ross/ Tom Kelly

Analytical Report
Volatiles by Method 8260

Lab Report Number: 62435_6
Sample Date: 05/31/96
Received Date: 05/31/96
Sample Site: NASP Bldg 3297
Job Order No.: 120 4063

COMPOUND NAME	62435	units	Det. Limit	62436	units	Det. Limit
Methylene Chloride	BDL	UG/L	5	BDL	UG/L	5
Methyl ethyl ketone (MEK) *	BDL	UG/L	5	BDL	UG/L	5
Methyl isobutyl ketone (MIBK) *	BDL	UG/L	5	BDL	UG/L	5
Naphthalene	BDL	UG/L	5	BDL	UG/L	5
n-Propylbenzene	BDL	UG/L	1	BDL	UG/L	1
Styrene	BDL	UG/L	1	BDL	UG/L	1
1,1,1,2-Tetrachloroethane	BDL	UG/L	1	BDL	UG/L	1
1,1,2,2-Tetrachloroethane	BDL	UG/L	1	BDL	UG/L	1
Tetrachloroethene	BDL	UG/L	1	BDL	UG/L	1
Toluene	BDL	UG/L	1	BDL	UG/L	1
1,2,3-Trichlorobenzene	BDL	UG/L	1	BDL	UG/L	1
1,2,4-Trichlorobenzene	BDL	UG/L	1	BDL	UG/L	1
1,1,1 Trichloroethane	BDL	UG/L	1	BDL	UG/L	1
1,1,2-Trichloroethane	BDL	UG/L	1	BDL	UG/L	1
Trichloroethene	BDL	UG/L	1	BDL	UG/L	1
Trichloroflouromethane	BDL	UG/L	1	BDL	UG/L	1
1,1,2-Trichloro-1,2,2-Trifluoroethane *	2	UG/L	2	BDL	UG/L	2
1,2,3 Trichloropropane	BDL	UG/L	1	BDL	UG/L	1
1,2,4-Trimethylbenzene	BDL	UG/L	1	BDL	UG/L	1
1,3,5-Trimethylbenzene	BDL	UG/L	1	BDL	UG/L	1
Vinyl Chloride	BDL	UG/L	1	BDL	UG/L	1
m,p-Xylene	BDL	UG/L	1	BDL	UG/L	1
o Xylene	BDL	UG/L	1	BDL	UG/L	1

SURROGATE SPIKE RECOVERIES

	Acceptance Limits	62435	62436
1,2 Dichloroethane-d4	75-133	108	111
Toluene-d8	86-119	103	102
Bromoflourobenzene	85-116	106	105

COMMENTS :

BDL = Below detection limit. UG/L = Microgram per liter. * = FL HRS certification pending

Approved by : Jim Taylor for J. Dees Date : 6/4/96

HAZARDOUS WASTE CHAIN OF CUSTODY/REQUEST FOR ANALYSIS

NPWC Environmental Laboratory
Bldg. 3667, Code 920
NAS Pensacola, Fl. 32508
Ph#: (904) 452-4728/3642
DSN: 922-4728/3642
FAX: (904) 452-2799/2867

Requester: RUST E&I
Address:
Charleston S.C.
Phone #: 803 572 5600
Contact: Scott Ross
Job Order #: 1204-063

Report Required? (Yes) No DEP? Yes No
Lab ID Number:
Sample Date: 5/31/96
Received Date: 5/31/96
Sample Site: Austrian, WWTP
Lab Due Date:

Sample ID #	Lab	#1- 6-2435	#2- 6-2436	#3-	#4-
Sample Name	----------	WWTP INF.	WWTP EFFI.		
or Location	----------	Bldg 3297	Bldg 3297		
Sampled by	----------	C. Tucker	C. Tucker		
Collection	Date	5/31/96	5/31/96		
Date/Time	Time	1440	1445		
Sample Matrix	----------	Water, INF.	Water, EFF.		

Notes:
#1 Influent
#2 Effluent
RUSH

GROUP PARAMETERS by Method Name	METHOD #	X	Bottle ID #'s	X	Bottle ID #'s	X	Bottle ID #'s	X	Bottle ID #'s	Billing Units	Containers Required (L/S)	Preservative(s) Used (Liquids)
HW Charact. (complete)	EPA SW 846									60	See below	See below
Ignitability (Flashpoint)	SW 846 1010									2	250ml/4 oz.	4° C
Reactivity (Cyanide & Sulfide)	EPA SW-846									4	1L/4 oz.	4° C
Corrosivity (pH)	SW 846 9040/9045									1	250ml/4 oz.	4° C
Toxicity (TCLP) complete	EPA SW-846									55	See below	See below
Toxicity (TCLP) complete	EPA SW-846									55	See below	See below
TCLP Non Volatile Extraction	SW 846 1311									5	40 mlx2/4 oz.	4° C
TCLP Volatile ZHE Extraction	SW 846 1311									5	1Lx4/32 oz.	HCl to pH<2/4° C
TCLP BNA Extractables	SW 846 8270									10	1Lx3/4 oz.	4° C
TCLP Acid Extractables	SW 846 8270									10	1Lx3/4 oz.	4° C
TCLP B/N Extractables	SW 846 8270									10	1Lx3/4 oz.	4° C
TCLP Pesticides	SW 846 8080									10	1Lx3/4 oz.	4° C
TCLP Herbicides	SW 846 8150									10	1Lx3/4 oz.	4° C
TCLP Volatiles	SW 846 8260									9	40 ml x 3/4 oz.	HCl to pH<2/4° C
TCLP Metals (8)	EPA SW-846									7	500 ml/4 oz.	HNO_3 to pH<2
Complete Priority Pollutants	EPA SW-846									42	See below	See below
PP Acid Extractables	SW 846 8270									10	1Lx3/4 oz.	4° C
PP B/N Extractables	SW 846 8270									10	1Lx3/4 oz.	4° C
PP Pesticide/PCB's	SW 846 8080									10	1Lx3/4 oz.	4° C
PP Volatiles	SW 846 8260									9	40 ml x 3/4 oz.	HCl to pH<2/4° C
PP Metals (13)	EPA SW-846									9	500 ml/4 oz.	HNO_3 to pH<2
PP Cyanide/Phenol	EPA SW-846									4	1L Plastic/1L Glass	NaOH/H_2SO_4
Toxicity (TCLP) less Pest/Herb	EPA SW-846									40	See below	See below
F001 - F005 Solvents	EPA SW-846									28	1Lx8/40mlx3/16 oz.	4° C
Total Volatiles	SW 846 8260	X	1,2,3,4	X	1,2,3,4					9	40 mlx3/4 oz.	HCl to pH<2/4° C
Total BNA Extractables	SW 846 8270									18	1Lx2/16 oz.	4° C
Total RCRA Metals (8)	EPA SW-846									7	500 ml/4 oz.	HNO_3 to pH<2
PCB's in Oil	SW 846 8080									3	40 ml/4 oz.	None
PCB's in Water/Soil/Wipes	SW 846 8080									4	1L/4 oz.	None
Other:												

Comments: Samples collected from Austrian located within WWTP, NAS Pensacola. (P.M.)

Relinquished by: [signature]
Date/Time: 5/31/96 1500

Received by: [signature]
Date/Time: 5-31-96 1500

Attachment B
As Built Drawings

RECORD DRAWINGS

GROUNDWATER PRETREATMENT SYSTEM

NAVAL AIR STATION WWTP

PENSACOLA, FLORIDA

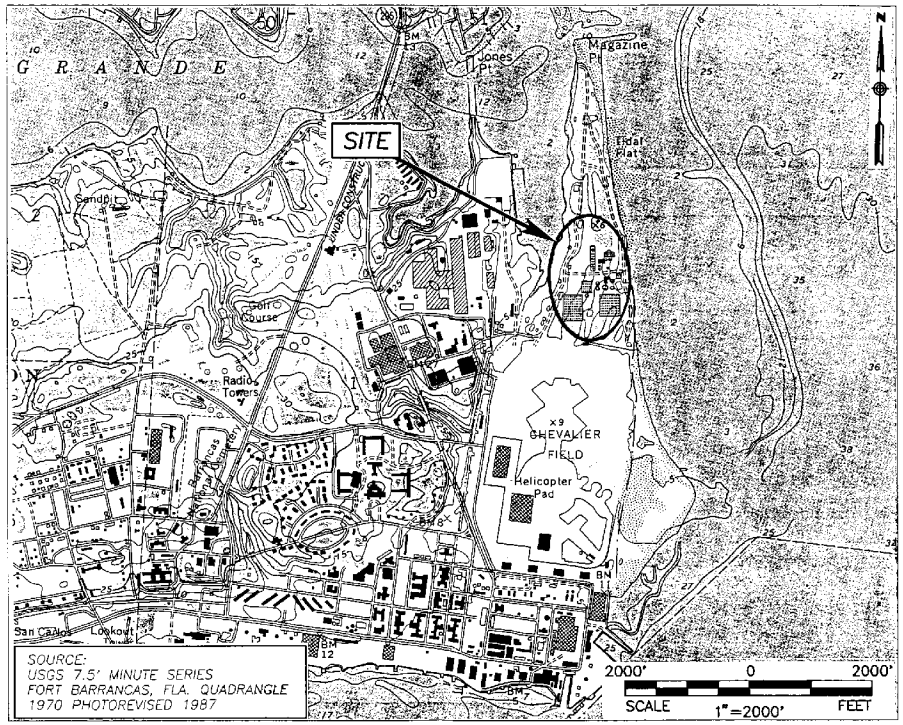

SITE LOCATION MAP

INDEX OF DRAWINGS

SHEET NO.	TITLE
1 OF 5	COVER SHEET
2 OF 5	PROCESS AND INSTRUMENTATION DIAGRAM
3 OF 5	PRETREATMENT SYSTEM LAYOUT DETAIL
4 OF 5	PRETREATMENT SYSTEM LAYOUT PLAN SHEET
5 OF 5	DETAILS AND SECTIONS

8/5/96

RUST ENVIRONMENT & INFRASTRUCTURE

COVER SHEET
GROUNDWATER PRETREATMENT SYSTEM
NAVAL AIR STATION WWTP
PENSACOLA, FLORIDA
RUST Project No. 37122.000

DWG: P:\CADD\37122\37122R01 PLOTTED: 07/30/96

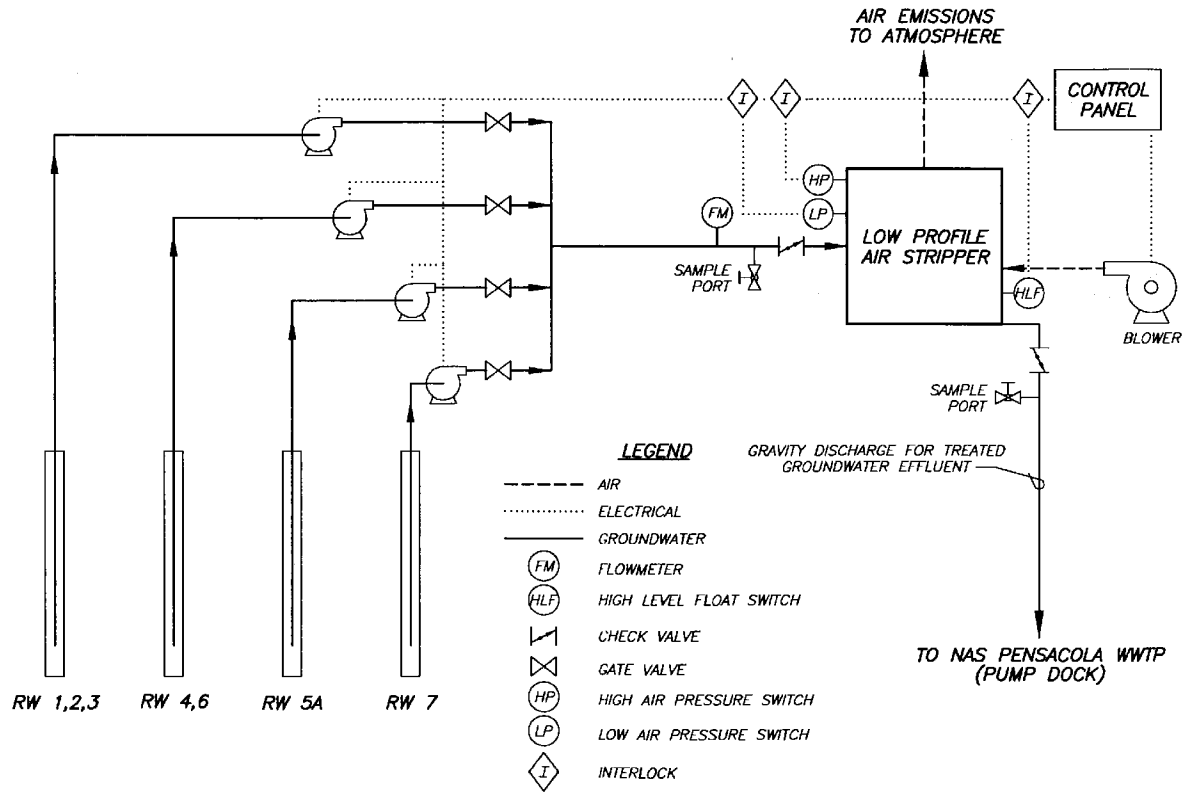

NOTE:
HIGH/LOW AIR PRESSURE RELAY SWITCHES ARE WIRED TO SHUT OFF ONLY THE PUMP STATIONS, BUT NOT THE BLOWER MOTOR AS SPECIFIED.

8/5/96

RUST ENVIRONMENT & INFRASTRUCTURE

PROCESS AND INSTRUMENTATION DIAGRAM
GROUNDWATER PRETREATMENT SYSTEM
NAVAL AIR STATION WWTP
PENSACOLA, FLORIDA
RUST Project No. 37122.003

SHEET 2 OF 5

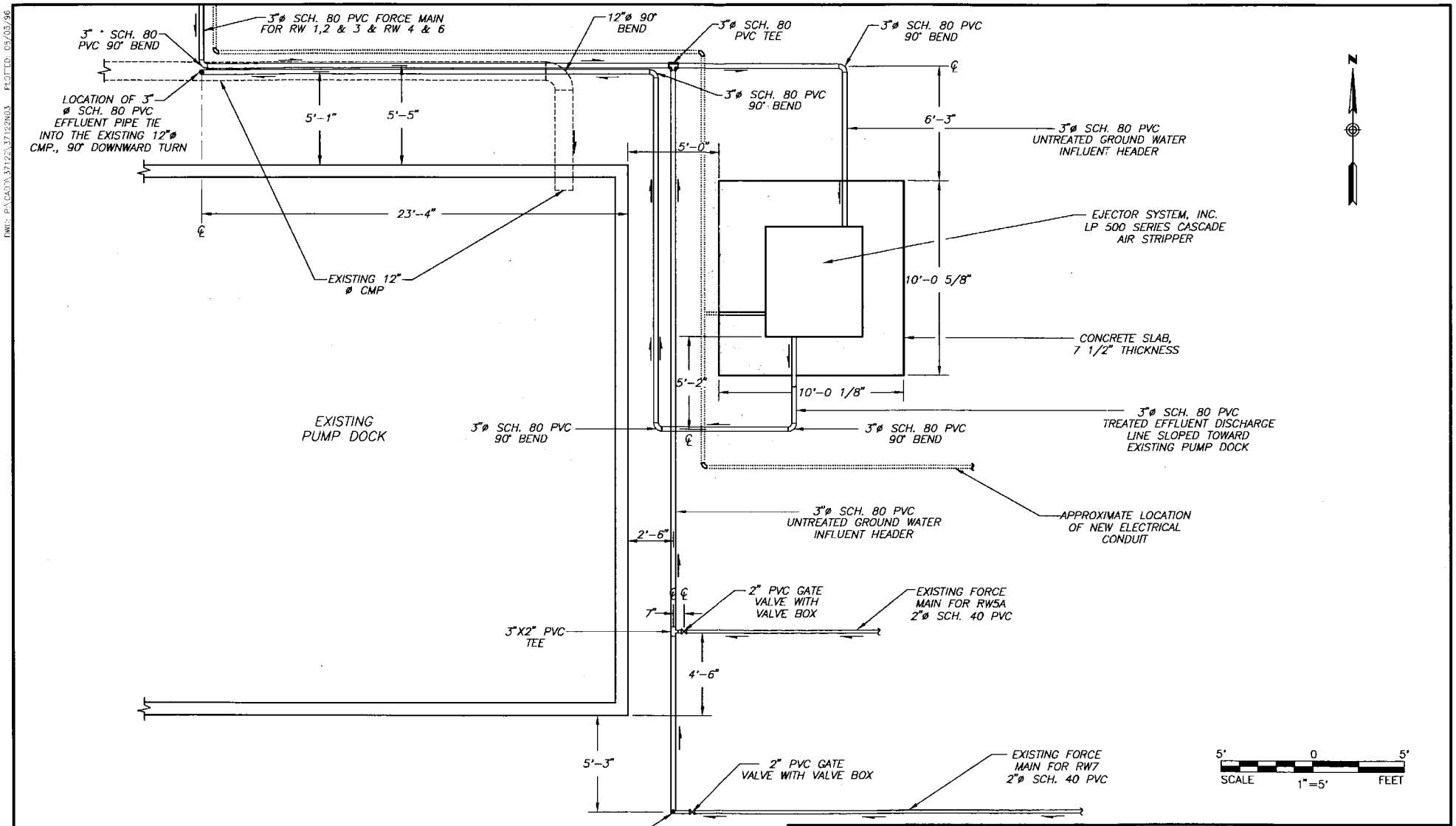

J Burkell
8/5/96

RUST ENVIRONMENT & INFRASTRUCTURE

PRETREATMENT SYSTEM LAYOUT DETAIL
GROUNDWATER PRETREATMENT SYSTEM
NAVAL AIR STATION WWTP
PENSACOLA, FLORIDA
RUST Project No. 37122.000
SHEET 3 OF 5

DWG: P:\CADD\37122\37122N03 PLOTTED: 08/05/96

DWG: D:\CADD\37122\37122N04 PLOTTED: 08/05/96

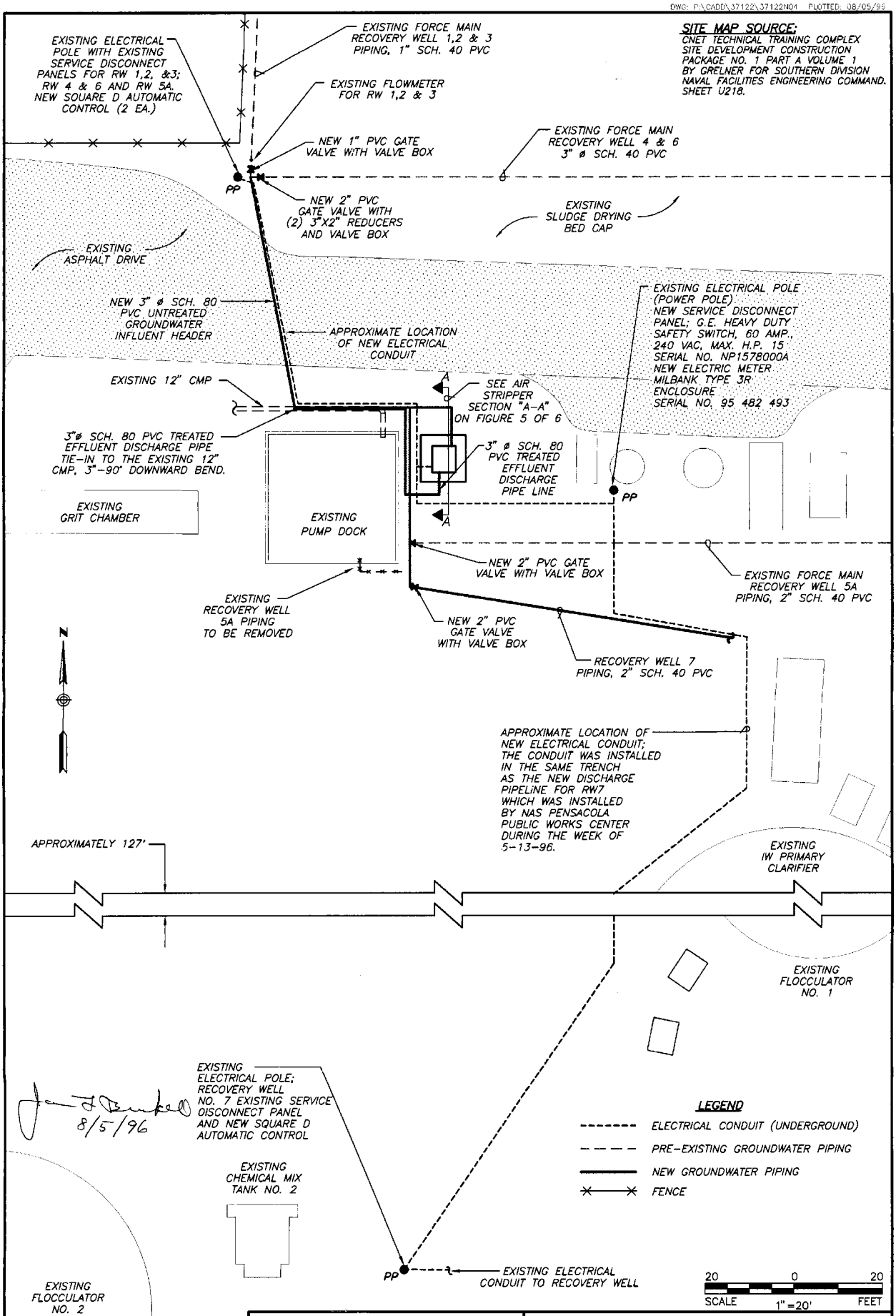

RUST ENVIRONMENT & INFRASTRUCTURE

PRETREATMENT SYSTEM LAYOUT PLAN SHEET
GROUNDWATER PRETREATMENT SYSTEM
NAVAL AIR STATION WWTP
PENSACOLA, FLORIDA
RUST Project No. 37122.000

EQUIPMENT SCHEDULE

① BLOWER-NEW YORK BLOWER CO.
FAN DESCRIPTION - PRESSURE BLOWER
SHOP NO. M11480 180
SIZE - 2200 ALUM

② BLOWER MOTOR - ELECTRIC BLOWER MOTOR
BALDOR ELECTRIC CO.
NO. S 913079
SPEC. 37J14X739
H.P. 5
VOLTS 230
AMPS 19.5
RPM 3450
HZ 60
SERVICE F. 1.00
PH. I CLASS B
CODE K
RATING - 46 C AMB.
FRAME - 215T SER. 895
FT. SMITH, ARK. USA

③ BLOWER STARTER - SQUARE D
EXPLOSION PROOF MANUAL STARTER
TYPE 7.9 ENCLOSURE
CLASS 2510
TYPE MCR 22
SERIES B
VOLTS 115/230
600 VOLT AC MAX.

④ PRESSURE GAUGE - MAGNEHELIC
MAX. PRESSURE 15 PSIG
CATALOG NO. 2040
SERIAL NO. R 950112ER34

⑤ CHECK VALVE - STOCKHAM
125S 200 CWP

⑥ FLOWMETER - HERSEY
SERIAL NO. 9506918

⑦ OUTLET BOX - CROUSE HINDS
CATALOG NO. GUB01

⑧ EJECTOR SYSTEMS, INC.
LP 500 SERIES CASCADE
AIR STRIPPER.
HYDRAULIC CAPACITY - 50 GPM
QUANTITY OF AIR REQUIRED - 400 CFM

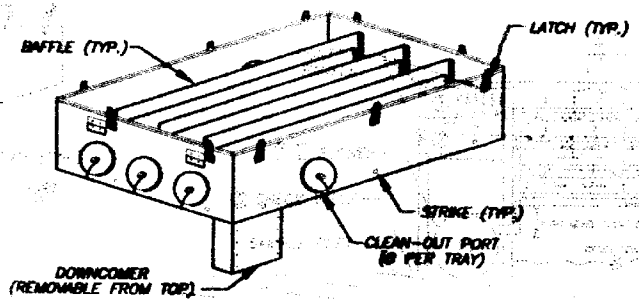

LP500 CASCADE AIR STRIPPER TRAY
(ISOMETRIC VIEW)
N.T.S.

NOTE:
EMISSION STACK NOT IN ACCORDANCE WITH SPECIFICATIONS. SPECIFICATIONS INDICATED THAT THE STACK SHOULD BE 4' HIGH, 8" DIAMETER SCH. 80 PVC WITH DEMISTER.

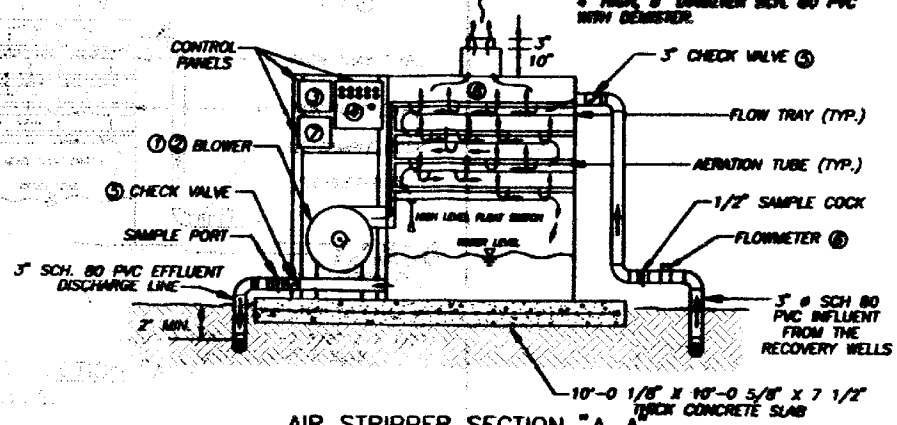

AIR STRIPPER SECTION "A-A"
N.T.S.

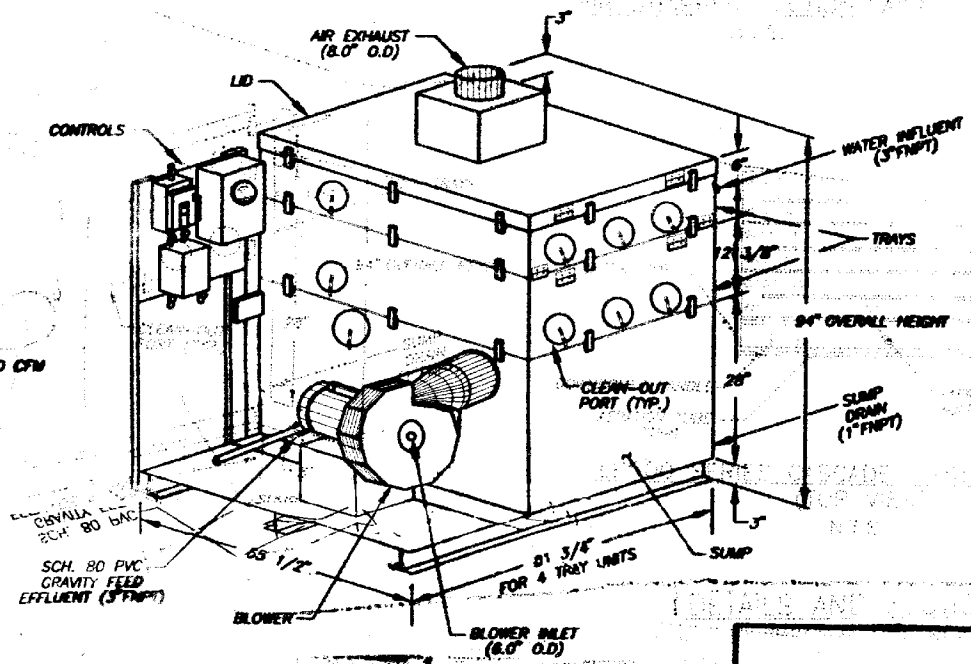

LP500 CASCADE AIR STRIPPER
(2 TRAY UNIT SHOWN)
N.T.S.

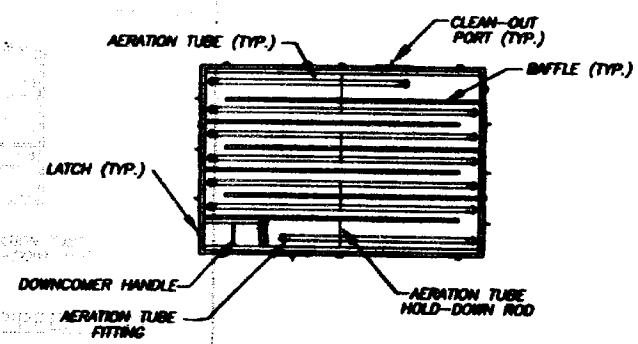

LP500 SERIES CASCADE AIRSTRIPPER TRAY
(TOP VIEW)
N.T.S.

8/5/96

RUST ENVIRONMENT & INFRASTRUCTURE

DETAILS AND SECTIONS
GROUNDWATER PRETREATMENT SYSTEM
NAVAL AIR STATION WWTP
PENSACOLA, FLORIDA
RUST Project No. 37122.000

SHEET 5 OF 5