N40003.AR.000827
PUERTO RICO NA
5090.3a

Final

RCRA Facility Investigation Work Plan
SWMU 3

Naval Station Roosevelt Roads

RCRA/HSWA Permit No. PR2170027203

Ceiba, Puerto Rico

Prepared For

Department of the Navy
Atlantic Division
Naval Facilities Engineering Command

Norfolk, Virginia

Contract No. N62470-95-D-6007
CTO-0099

January 24, 2002

Prepared by

CH2M HILL

Baker
Environmental, Inc.

CDM
Federal Programs Corp.

TABLE OF CONTENTS

Page

LIST OF ACRONYMS AND ABBREVIATIONS iv

1.0 INTRODUCTION 1-1

2.0 RFI HISTORY 2-1
2.1 RCRA Part B Permit 2-1
2.2 1995 RFI Work Plan 2-1
2.3 RFI Investigations and Corresponding RFI Reports 2-1
2.4 EPA and Navy Correspondence 2-2
2.5 Burns & McDonnell Groundwater Monitoring 2-3
2.6 Remaining Six Replacement Wells 2-3
2.7 Recent EPA Correspondence 2-3
2.8 Proposed Investigations 2-3
2.9 Investigation Goals 2-4

3.0 TECHNICAL APPROACH 3-1
3.1 SWMU 3 – Base Landfill 3-1
3.2 Miscellaneous Tasks 3-3
3.2.1 Surveying 3-3
3.2.2 Laboratory Analyses 3-3
3.2.3 Data Validation 3-4
3.2.4 Field QA/QC 3-4

4.0 DATA EVALUATION 4-1

5.0 REPORTING 5-1

6.0 SCHEDULE 6-1

7.0 REFERENCES 7-1

TABLE OF CONTENTS
(Continued)

LIST OF TABLES

3-1 Summary of Sampling and Analytical Program, SWMU 3 – Base Landfill
3-2 Summary of QA/QC Sampling and Analytical Program, SWMU 3 – Base Landfill
3-3 Method Performance Limits Appendix IX Compound List and Contract Required Quantitation Limits (CRQL)
3-4 Method Performance Limits Explosives and Explosive Residues and Contract Required Quantitation Limits (CRQL)

LIST OF FIGURES

1-1 SWMU/AOC Location Map

3-1 Sample Location Map - SWMU 3, Base Landfill

6-1 SWMU 3 Proposed RFI Schedule

LIST OF APPENDICES

A Ground Water Sampling Procedure Low Stress (Low Flow) Purging and Sampling
B Test Boring and Well Construction Records

LIST OF ACRONYMS AND ABBREVIATIONS

AOC	Area of Concern
Baker	Baker Environmental, Inc.
CFR	Code of federal regulations
COPCs	Chemicals of Potential Concern
CTO	Contract Task Order
D.O.	dissolved oxygen
EPA	Environmental Protection Agency
EQB	Environmental Quality Board
ESE	Environmental Science and Engineering, Inc.
IAS	Initial Assessment Study
IDW	Investigation Derived Waste
LANTDIV	Atlantic Division, Naval Facilities Engineering Command
MCLs	Maximum Contaminant Levels
MS/MSD	Matrix Spike/Matrix Spike Duplicate
NSRR	Naval Station Roosevelt Roads
OU	Operable Unit
PCB	Polychlorinated Biphenyls
QA/QC	Quality Assurance/Quality Control
RBC	risk-based concentration
RCRA	Resource Conservation and Recovery Act
redox	reduction-oxidation potential
RFA	RCRA Facility Assessment
RFI	RCRA Facility Investigation
SOPs	Standard Operating Procedures
STB	Super Tropical Bleach
SWMU	Solid Waste Management Unit
VOCs	Volatile Organic Compounds
VSI	Visual Site Inspection

1.0 INTRODUCTION

This Resource Conservation and Recovery Act (RCRA) Facility Investigation (RFI) Work Plan has been prepared by Baker Environmental, Inc. (Baker) under contract to the Atlantic Division, Naval Facilities Engineering Command (LANTDIV) Contract Number N62470-95-D-6007, Contract Task Order (CTO) 099. This work plan has been prepared to perform field investigation work at Solid Waste Management Unit (SWMU) 3 – Base Landfill at Naval Station Roosevelt Roads (NSRR), under the Corrective Action provisions of the Station's RCRA Part B Permit No. PR2170027203.

The Base Landfill has been in operation since the early 1960s and is located south of the Forrestal Wastewater Treatment Plant (Building 1758) and SWMU 30 (Former Incinerator Area), as presented on Figure 1-1. The landfill is still operating and accepting wastes in accordance with the Puerto Rico Environmental Quality Board (EQB) Solid Waste Management regulations. The landfill covers 85 acres, and is separated into several disposal areas (A.T. Kearney, Inc., 1988). Information regarding previous investigations performed at this site can be found within the 1995 RFI Work Plan submitted by Baker (Baker, 1995). It should be noted that a new vertical cell was finished in March 1999 at the base Landfill, and put into operation in June 2000 in accordance with the EQB Solid Waste Management regulations.

The 1995 RFI Work Plan proposed several media to be sampled as part of the RFI investigation. The media included surface soil, subsurface soil, landfill surface water and sediment, leachate breakouts including surface water and associated sediment, groundwater, and offshore sediment sampling. A geophysical investigation was also proposed in the 1995 RFI Work Plan (Baker, 1995). Portions of this investigation were completed including the offshore sediment sampling and the geophysical investigation as mentioned in Section 2.0. The surface soil and subsurface soil samples originally proposed in the 1995 RFI Work Plan will not be collected as part of the RFI fieldwork. The operation of the Base Landfill consists of daily cover and a final cap from an outside source. Therefore, it has been agreed by the Navy and the EPA, that collecting soil samples from this media will not provide results related to this SWMU. The portions of the original RFI investigation that have yet to be conducted at SWMU 3 are described in Section 2.0, along with the history of the RFI at SWMU 3 to this point.

Section 1.0 of this document includes the introduction as well as a brief history of SWMU 3. Section 2.0 provides the RFI history at SWMU 3 including information from the RCRA Part B Permit, the 1995 RFI Work Plan, RFI investigations and corresponding RFI reports, EPA and Navy

correspondence, Burns & McDonnell groundwater monitoring, remaining six replacement wells, recent EPA correspondence, proposed investigations, and investigation goals. Section 3.0 provides the technical approach to the proposed RFI investigations for SWMU 3, including surveying, laboratory analysis, data validation, and field quality assurance/quality control (QA/QC). Section 4.0 provides information on the data evaluation process to be performed in the Draft RFI Report. Section 5.0 provides the information which will be included in the RFI Report. Section 6.0 provides a timeline for the RFI as proposed in this work plan. Section 7.0 provides the references utilized in the development of the RFI work plan.

2.0 RFI HISTORY

The following subsections provide the history of the RFI at SWMU 3 from the RCRA Part B Permit to the goals of the proposed investigation at SWMU 3.

2.1 RCRA Part B Permit

The RCRA Part B Permit dated October 20, 1994 was issued to the Captain of Naval Station Roosevelt Roads. This document listed SWMU 3 as an area requiring a full RFI investigation. The proposed RFI investigation was to include soil, surface water, groundwater, and sediments.

2.2 1995 RFI Work Plan

The 1995 RFI Work Plan was submitted to the EPA by Baker on September 13, 1995. This document provided information on the investigations that were to be performed as required by the EPA in the RCRA Part B Permit. The work proposed in this document for SWMU 3 included a geophysical survey, surface soil sampling, subsurface soil sampling, surface water and sediment sampling on the landfill, leachate and sediment sampling associated with leachate breakouts, groundwater sampling, and offshore sediment sampling as mentioned in Section 1.0. Included in this document was the Final Project Management Plans, the Final Data Collection Quality Assurance Plan, and the Final Health and Safety Plan.

2.3 RFI Investigations and Corresponding RFI Reports

In October 1995, the first RFI investigation was conducted at SWMU 3. This investigation included the collection of fifteen offshore sediment samples along the perimeter of the Base Landfill. The remaining two sediment locations were not sampled since there was extensive filling in the area related to the CPO Hut. This filling covered the sediments such that a representative sample could not be obtained (Baker, 1995). The other media proposed in the 1995 RFI Work Plan were not sampled during this investigation. In July 1996, a Draft RFI Report for the Phase I Investigations at Operable Unit (OU) 1, 6, and 7 was submitted to the EPA. This report contained a summary of the results from the fifteen sediment samples, as well as figures showing chemicals of potential concern (COPCs) at SWMU 3 from the Phase I Investigation.

In September 1997, a Phase II investigation was conducted at SWMU 3. This investigation included the collection of two offshore sediment samples from the locations that were not collected during the October 1995 investigation activities. The geophysical investigation was also performed at SWMU 3 during this investigation. The landfill was inspected during this investigation to identify if present any surface water sediment features on the landfill and leachate breakouts. None of these items were identified, therefore no samples were collected. On May 6, 1998, a Draft Additional Investigations Report for OU 1, 6, and 7 was submitted to the EPA. This report contained a summary of the results from the two sediment samples collected along with those sediment samples from the initial RFI investigation, indicating that there were no constituents of concern detected. Therefore, the report recommended no further action for sediments offshore of SWMU 3.

2.4 EPA and Navy Correspondence

On February 11, 1998, the EPA sent a comment letter to the Navy dealing with the RFI Quarterly Report for period August 1, 1997 – October 31, 1997. This quarterly report contained Attachment 1 (March 1997 and July 1997 addendum) Groundwater Monitoring System Implementation Plan for the Base Landfill (SWMU 3). The EPA requested that the Navy demonstrate the integrity of all wells that will be utilized to satisfy the groundwater investigation requirements of the 1995 EPA approved RFI work plan, as well as the requirements of monitoring landfills under the Subtitle D portion of the Code of Federal regulations (CFR). The EPA stated in their comment letter that "it is EPA's understanding that completion of the groundwater investigation requirements, completes the SWMU Number 3 investigation requirements of the September 1995 RFI Work Plan".

On May 6, 1998, the Navy responded to the EPA's February 11, 1998 comment letter. The Navy stated that three new monitor wells would be installed initially, with the remaining six monitor wells installed at a rate of two per year. The Navy also stated that two sets of samples would be collected during the initial round of sampling. One set would satisfy the requirements of the EQB's Subtitle D Solid Waste Program, and the second set would satisfy September 1995 approved RFI Work Plan. Any additional work required to satisfy the RCRA Part B Permit would be addressed in a separate RFI Groundwater Investigation Work Plan and a Final RFI Report.

2.5 Burns & McDonnell Groundwater Monitoring

Burns & McDonnell, under Chapter VII of the Non-Hazardous Solid Waste Regulations published by the Puerto Rico Environmental Quality Board, installed the initial three monitor wells (7GW09, 7GW10, and 7GW11) in June 1998. These were the initial three monitor wells that were mentioned in the Navy's May 6, 1998 response to comment letter.

The purpose of the groundwater monitoring at SWMU 3 is to determine whether groundwater quality has been affected by the landfill activities (Burns & McDonnell, March 2001). A total of four rounds (June 1998, February 2000, May 2000, and August 2000) of groundwater sampling have been performed by Burns & McDonnell from all nine wells associated with SWMU 3.

2.6 Remaining Six Replacement Wells

The remaining six replacement wells proposed in the Navy's May 6, 1998 response to comment letter were installed by Baker in December 2000. These replacement wells have not been sampled since their installation.

2.7 Recent EPA Correspondence

On November 20, 2001, the Navy and the EPA held a conference call to discuss the upcoming fieldwork at SWMU 3. It was agreed by both parties involved, that this RFI work plan should be developed containing a section explaining the history of the Base Landfill. Both parties also agreed that a complete round of groundwater samples should be collected and analyzed for the full Appendix IX list, as well as for explosives and asbestos as proposed in the EPA approved 1995 RFI Work Plan. This action will then complete requirements of the RFI investigation for SWMU 3.

2.8 Proposed Investigations

A total of nine groundwater monitor wells will be sampled from SWMU 3. Groundwater samples will be collected utilizing the low flow purging technique as presented in Appendix A. All groundwater samples will be analyzed for the full appendix IX list, as well as asbestos and explosives, as presented in Table 3-1. The laboratory results will be validated by an independent, third party, data validation firm. Groundwater field parameters will also be collected out in the field including pH, specific

conductance, temperature, reduction-oxidation potential (redox), dissolved oxygen (D.O.), and turbidity. One complete round of water levels will be obtained from all nine monitor wells at SWMU 3 prior to groundwater sampling. The water levels will be obtained on the same day continuously until all wells are measured. Another complete round of water levels will be obtained from all nine monitor wells at SWMU 3 on the last day of the field investigation.

2.9 Investigation Goals

This work plan proposes an investigation for SWMU 3 designed to complete the RFI investigation as requested by the EPA. The goals of the program, and how they are to be reached, are briefly discussed for this SWMU in the paragraphs that follow.

The goals for the RFI Investigation include:

1. Determine whether groundwater quality has been affected by the landfill activities. This will be accomplished through a complete round of groundwater sampling of all nine monitor wells located at SWMU 3.

2. Establish groundwater flow directions through the interpretation of groundwater elevation measurements obtained from the nine existing monitor wells.

Details of all the investigations to be performed are provided in Section 3.0 of this work plan.

3.0 TECHNICAL APPROACH

This section of the work plan describes the technical elements of the investigation necessary to accomplish the goals described in Section 2.0.

The EPA has approved a RFI work plan for the initial work at Roosevelt Roads under the Corrective Action Program (Baker, 1995). This work plan addressed necessary technical elements such as standard operating procedures (SOPs) and resumes of key personnel, as well as provisions of the following separate plans:

- Project Management Plan
- Data Collection Quality Assurance Plan
- Data Management Plan, and
- Health and Safety Plan.

Together, these plans provided all the details regarding field investigatory techniques, laboratory analyses, data validation and data evaluation needed to fulfill the requirements of the RFI program. Since the abovementioned document is in place and approved, it will form the basis of this plan. All the investigatory tasks described in subsequent sections of this plan will be performed in accordance with the techniques and methodologies provided in the original EPA approved work plan unless otherwise noted in this work plan. Therefore, only the work elements themselves are discussed in the sections which follow.

The sections that follow provide a description of the environmental field investigation that will be conducted along with the rationale and expected data usage at SWMU 3.

3.1 SWMU 3 – Base Landfill

Site Context

Previous sampling during the Supplemental Investigation (Baker, 1993) indicated trace concentrations of organic contaminants within the groundwater monitor wells located at SWMU 3. EPA requested in their February 11, 1998 that the Navy demonstrate the integrity of all groundwater monitor wells at SWMU 3. The integrity of each monitor well at SWMU 3 would have to be demonstrated if the

wells were ten years old, or if the boring logs were not available, or if these wells were not sampled in the last five years. Therefore, three of the groundwater monitor wells (7GW09 – 7GW11) were replaced and sampled by Burns & McDonnell in June 1998 under Chapter VII of the Non-Hazardous Solid Waste Regulations published by the Puerto Rico Environmental Quality Board. The purpose of the groundwater monitoring at SWMU 3 is to determine whether groundwater quality has been affected by the landfill activities (Burns & McDonnell, 2001). A total of four rounds (June 1998, February 2000, May 2000, and August 2000) of groundwater sampling have been performed by Burns & McDonnell at SWMU 3. The remaining six monitor wells (7GW12 – 7GW17) were replaced in December 2000 by Baker. The EPA has requested that a round of groundwater samples be collected from the newly installed six monitor wells at SWMU 3 to complete the RFI investigation. The Navy has decided to take a full round of groundwater samples from all nine monitor wells at the Base Landfill, considering the age of the samples collected from the initial three replacement wells, as well as their limited analyses. The collection of groundwater samples from the nine groundwater monitor wells at SWMU 3 will help determine if groundwater quality has been affected by the landfill activities.

Investigations Proposed

A total of nine groundwater monitor wells will be sampled from SWMU 3, as presented on Figure 3-1. Groundwater samples will be collected from each of the groundwater monitor wells, in accordance with the EPA Region II Groundwater Sampling Procedure Low Stress (Low Flow) Purging and Sampling. Attachment A provides the EPA Region II procedure. The groundwater samples will be analyzed in accordance with the protocols established in the September 1995 approved RFI work plan (Baker, 1995). The analysis will include the full appendix IX list, explosives, and asbestos as presented in Table 3-1. The laboratory results will be validated by an independent, third party, data validation firm. Groundwater field parameters will also be collected out in the field including pH, specific conductance, temperature, reduction-oxidation potential (redox), dissolved oxygen (D.O.), and turbidity.

The boring logs for the nine existing monitoring wells located at this site are provided for reference as Appendix B. One complete round of water levels will be obtained from all nine monitor wells at SWMU 3 prior to groundwater sampling. The water levels will be obtained on the same day continuously until all wells are measured. Another complete round of water levels will be obtained for all nine monitor wells at SWMU 3 on the last day of the field investigation.

Investigations Rationale

The groundwater sampling is being conducted to meet the RFI requirements outlined in the RCRA Part B permit for NSRR.

Data Usage

The data obtained from this investigation will be utilized to determine if groundwater quality has been affected by the landfill operations at SWMU 3. The data will be thoroughly evaluated as described in Section 4.0 of this work plan.

The groundwater elevation data collected will be utilized to determine the groundwater flow characteristics at the site as requested by the EPA.

3.2 Miscellaneous Tasks

This section contains some miscellaneous tasks required as part of the investigation for the work proposed in the previous sections for SWMU 3.

3.2.1 Surveying

The three monitor wells installed in June 1998 by Burns & McDonnell will be surveyed for vertical (± 0.01 feet) and horizontal (± 0.1 feet) location using established control. The survey will be performed by the same firm that has performed previous work for Baker at other SWMUs at NSRR. This will then ensure that the same level of survey quality and detail is attained.

3.2.2 Laboratory Analyses

Tables 3-1 and 3-2 summarize the environmental and QA/QC samples to be obtained and the analyses to be performed. STL Savannah Laboratories will perform the analysis at SWMU 3 as they have with many of the SWMUs/Areas of Concern (AOCs) at NSRR. This will ensure that the same accuracy and consistency is obtained for the samples. The method performance limits for the full Appendix IX list is provided in Table 3-3.

3.2.3 Data Validation

All laboratory data generated by these investigations will be subjected to independent, third party, validation. The EPA Region II Data Validation Standard Operating Procedures will be followed. Heartland Environmental Services, Inc. will perform the validation. Heartland Environmental Services, Inc. has performed the data validation during many of the investigations conducted at SWMU 3 over the years. This will ensure that the same techniques are followed and that an equivalent review of the data is performed.

3.2.4 Field QA/QC

The collection of QA/QC samples will be obtained during this investigation. This will include the collection of equipment rinsates, trip blanks, field blanks, field duplicates, and matrix spike/matrix spike duplicates (MS/MSD) as detailed in Table 3-2.

3.2.4.1 Equipment Rinsates

Equipment rinsates are the final analyte-free water rinse from equipment decontamination procedures. Equipment rinsate blanks will be collected daily during each sampling event. Initially, samples from every other day should be analyzed. If analytes pertinent to the project are detected in the rinsate, the remaining samples (equipment rinsates) must be analyzed. The results from the blanks will be used to evaluate the decontamination methods. This comparison is made during data validation and the rinsates are analyzed for the same parameters as the related samples. One equipment rinsate will be collected per day of field sampling.

3.2.4.2 Trip Blanks

Trip blanks will be prepared at the laboratory and shipped with the sample containers. Trip blanks will be packaged for shipment with the other volatile organic compounds (VOCs) samples and sent for analysis. At no time after their preparation will the trip blank sample containers be opened before they reached the laboratory. At least one trip blank per shipping cooler containing samples requiring VOC analysis will be sent to the laboratory for VOC analysis.

3.2.4.3 Field Blanks

Field blanks consist of the source water used in equipment rinsate procedures. At a minimum, one field blank for each event and each source of water must be collected and analyzed for the same parameters as the related samples. One field blank per source per event will be collected. It is anticipated that one source of water will be utilized for this investigation as shown in Table 3-2.

3.2.4.4 Field Duplicates/Split Samples

Field duplicates (or split samples) for groundwater will be collected simultaneously with the environmental sample. The water samples will not be composited. Field duplicates will be collected at a frequency of ten percent.

3.2.4.5 Matrix Spike/Matrix Spike Duplicates

MS/MSDs are not field sampling activities, they are laboratory derived, and are collected to evaluate the matrix effect of the sample upon the analytical methodology. An MS and MSD must be performed for each group of samples of a similar matrix. MS/MSD samples will be collected at a frequency of five percent.

3.3.4.6 Investigation Derived Waste

Only one source of minimal Investigation Derived Waste (IDW) is expected during this investigation:

- Groundwater from the purging of nine monitor wells

All waters will be containerized in 55 gallon drums located onsite. The removal of these drums will be handled according to the specific SOP for this procedure as listed in the 1995 EPA approved work plan.

3.2.4.7 Standard Operating Procedures

All the SOPs applicable to the work are included in the original RFI work plans or subsequent addenda. These SOPs can be viewed in their entirety in the EPA approved 1995 RFI Work Plan.

The following SOPs are incorporated into this work plan by reference:

- SOP F104 – Groundwater Sample Acquisition
- SOP F201 – On-Site Water Quality Testing
- SOP F202 – Water Level, Water-Product Level Measurements, and Well Depth Measurements
- SOP F302 – Chain-of-Custody
- SOP F303 – Field Logbook
- SOP F304 – QA/QC Samples
- SOP F502 – Decontamination of Sampling and Monitoring Equipment
- SOP F504 – Handling of Site Investigation Wastes

4.0 DATA EVALUATION

The groundwater sample results obtained during this investigation, as well as the four rounds of groundwater sampling performed by Burns & McDonnell, will be compared to several criteria within the Draft RFI Report. The criteria will include the Federal Maximum Contaminant Level (MCLs), as well as the EPA Region III Tap Water risk-based concentrations (RBCs). The groundwater sample results will also be compared to the marine surface water screening values to determine if any ecological risk is present. The marine surface water screening values from the EPA approved Work Plan for Ecological Risk Assessment for SWMU 7/8 will be utilized for this comparison. The results from this investigation, as well as from the groundwater monitoring program, will help determine if further investigations are required under the RFI program, or if no further action is warranted with continuance of groundwater monitoring under the PREQB Solid Waste Regulations.

A full round of water levels, including all nine groundwater monitor wells, will be ascertained to more accurately define the groundwater flow patterns across the SWMU 3 area.

5.0 REPORTING

The preliminary analytical results from this investigation will be submitted in the appropriate RCRA Quarterly Report upon receipt of validated data following completion of the field investigation.

The report generated for this investigation will be submitted 60 days upon receipt of validated data following completion of the field investigation. The report will be labeled Draft RFI Report for SWMU 3, and contain the following information:

- An introduction presenting the investigative history of SWMU 3, the scope and objectives, as well as the report organization.
- A facility background presenting the description of the entire base, as well as individual description of SWMU 3. This section will also contain a summary of the groundwater monitoring that has been implemented at the Base Landfill under RCRA Subtitle D regulations.
- A facility investigation section will be included to present a description of the environmental field investigation activities conducted at SWMU 3 past and present.
- A physical characteristics section for SWMU 3 which will present the climatology, topography, regional and site geology, and hydrology for SWMU 3.
- A nature and extent of contamination section will present the analytical results for the groundwater data collected during this RFI field investigation and the four rounds (June 1998, February 2000, May 2000, and August 2000) of the groundwater monitoring events under the PR solid waste requirements. Also included will be the previous portions of the RFI field investigation including the 1996 and 1997 shoreline sediments as wells as the 1997 geophysical survey. The data shall be analyzed to determine if the operation of the landfill has impacted any of the media.
- A conclusions and recommendations section as determined from the findings of the investigation.
- A reference section presenting the references utilized in the text.

6.0 SCHEDULE

A schedule for the implementation of this work plan is provided as Figure 6-1. It should be noted that this schedule is dependent upon EPA review time. Many other factors can also extend the schedule such as resampling if further re-characterization is required, weather delays in the field, or consensus cannot be reached on how the EPA's comments are to be incorporated.

7.0 REFERENCES

A.T. Kearney, Inc., 1988. Phase II RCRA Facility Assessment of the U.S. Naval Station Roosevelt Roads Facility, Roosevelt Roads, Puerto Rico. November 1998.

Baker Environmental, Inc., (Baker) 1993. Draft Report Supplemental Investigation Installation Restoration Program Activities, Naval Station Roosevelt Roads, Ceiba, Puerto Rico. June 11, 1993.

Baker, 1995. Final RCRA Facility Investigation, Naval Station Roosevelt Roads, Puerto Rico. September 14, 1995.

Burns & McDonnell, 2001. Background Groundwater Monitoring Report Solid Waste Landfill Facility U.S. Naval Station Roosevelt Roads, Ceiba, Puerto Rico. March 29, 2001.

TABLES

TABLE 3-1

SUMMARY OF SAMPLING AND ANALYTICAL PROGRAM
SWMU 3 - BASE LANDFILL
RFI WORK PLAN
NAVAL STATION ROOSEVELT ROADS, CEIBA, PUERTO RICO

	Analysis Requested Aqueous Samples			
Sample ID	Full Appendix IX List[1]	Asbestos	Explosives	Comments
Groundwater Investigation				
7GW09	X	X	X	Groundwater
7GW10	X	X	X	Groundwater
7GW11	X	X	X	Groundwater
7GW12	X	X	X	Groundwater
7GW13	X	X	X	Groundwater
7GW14	X	X	X	Groundwater
7GW15	X	X	X	Groundwater
7GW16	X	X	X	Groundwater
7GW16D	X	X	X	Duplicate
7GW16MS	X	X	X	Matrix Spike
7GW16MSD	X	X	X	Matrix Spike Duplicate
7GW17	X	X	X	Groundwater
Total	12	12	12	

Notes: [1] See Table 3-3 for complete listing of the Full Appendix IX parameters

TABLE 3-2

SUMMARY OF QA/QC SAMPLING AND ANALYTICAL PROGRAM
SWMU 3 - BASE LANDFILL
RFI WORK PLAN
NAVAL STATION ROOSEVELT ROADS, CEIBA, PUERTO RICO

	Analysis Requested Aqueous Samples				
Sample ID	Full Appendix IX List (1)	Asbestos	Explosives	Appendix IX VOCs	Comments
TRIP BLANKS					
3TB01				X	
3TB02				X	
3TB03				X	
Total	0	0	0	3	
EQUIPMENT RINSATES					
3ER01	X	X	X		Silicon Tubing
3ER02	X	X	X		Silicon Tubing
3ER03	X	X	X		Silicon Tubing
Total	3	3	3	0	
FIELD BLANKS					
2000FB01	X	X	X		Lab Grade DI H_2O
Total	1	1	1	0	
Total QA/QC	4	4	4	3	

Notes: (1) See Table 3-3 for complete listing of the Full Appendix IX parameters

TABLE 3-3

METHOD PERFORMANCE LIMITS
APPENDIX IX COMPOUND LIST AND CONTRACT
REQUIRED QUANTITATION LIMITS (CRQL)

Volatiles	Quantitation Limits*		Method Number
	Water (mg/L)	Low Soil (mg/kg)	
Acetone	50	50	8260
Acetonitrile	200	200	8260
Acrolein	100	100	8260
Acrylonitrile	100	100	8260
Benzene	5.0	5.0	8260
Bromodichloromethane	5.0	5.0	8260
Bromoform	5.0	5.0	8260
Bromomethane	10	10	8260
Carbon Disulfide	5.0	5.0	8260
Carbon Tetrachloride	5.0	5.0	8260
Chlorobenzene	5.0	5.0	8260
Chloroethane	10	10	8260
Chloroform	5.0	5.0	8260
Chloromethane	10	10	8260
Chloroprene	5.0	3.0	8260
3-Chloro-1-propene	5.0	5.0	8260
1,2-Dibromo-3-chloropropane	5.0	10	8260
Dibromochloromethane	5.0	5.0	8260
1,2-Dibromoethane	5.0	5.0	8260
Dibromomethane	5.0	5.0	8260
trans-1,4-Dichloro-2-butene	10	10	8260
Dichlorodifluoromethane	10	5.0	8260
Dibromomethane	5.0	5.0	8260
1,1-Dichloroethane	5.0	5.0	8260
1,2-Dichloroethane	5.0	5.0	8260
trans-1,2-dichloroethene	5.0	5.0	8260
1,1-Dichloroethene	5.0	5.0	8260
Methylene Chloride	5.0	5.0	8260
1,2-Dichloropropane	5.0	5.0	8260
cis-1,3-Dichloropropene	5.0	5.0	8260
trans-1,3-Dichloropropene	5.0	5.0	8260
Ethyl benzene	5.0	5.0	8260
Ethyl methacrylate	5.0	5.0	8260
2-Hexanone	25	25	8260
Iodomethane	5.0	5.0	8260
Isobutanol	200	200	8260
Methacrylonitrile	100	100	8260
2-Butanone	25	25	8260
Methyl methacrylate	5.0	5.0	8260
4-Methyl-2-pentanone	25	25	8260

TABLE 3-3

METHOD PERFORMANCE LIMITS
APPENDIX IX COMPOUND LIST AND CONTRACT
REQUIRED QUANTITATION LIMITS (CRQL)

Volatiles (Cont.)	Quantitation Limits*		Method Number
	Water (mg/L)	Low Soil (mg/kg)	
Pentachloroethane	25	25	8260
Propionitrile	100	100	8260
Stryene	5.0	5.0	8260
1,1,1,2-Tetrachloroethane	5.0	5.0	8260
1,1,2,2-Tetrachloroethane	5.0	5.0	8260
Tetrachloroethene	5.0	5.0	8260
Toluene	5.0	5.0	8260
1,1,1-Trichloroethane	5.0	5.0	8260
1,1,2-Trichloroethane	5.0	5.0	8260
Trichloroethene	5.0	5.0	8260
Trichlorofluoromethane	5.0	5.0	8260
1,2,3-Trichloropropane	5.0	5.0	8260
Vinyl Acetate	10	10	8260
Vinyl Chloride	10	10	8260
Xylene	10	10	8260

* Quantitation limits listed for soil/sediment are based on wet weight. The quantitation limits calculated by the laboratory for soil/sediment, calculated on dry weight basis, will be higher.

TABLE 3-3

METHOD PERFORMANCE LIMITS
APPENDIX IX COMPOUND LIST AND CONTRACT
REQUIRED QUANTITATION LIMITS (CRQL)

Semivolatiles	Quantitation Limits*		Method Number
	Water (mg/L)	Low Soil (mg/kg)	
Acenaphthene	10	330	8270
Acenaphthylene	10	330	8270
Acetophenone	10	330	8270
2-Acetylaminofluorene	10	330	8270
4-Aminobiphenyl	20	330	8270
Aniline	20	330	8270
Anthracene	10	330	8270
Aramite	10	330	8270
Benzo(a)anthracene	10	330	8270
Benzo(b)fluoranthene	10	330	8270
Benzo(k)fluoranthene	10	330	8270
Benzo(g,h,i)perylene	10	330	8270
Benzo(a)pyrene	10	330	8270
Benzyl alcohol	10	330	8270
Bis(2-chloroethoxyl)methane	10	330	8270
Bis(2-chloroethyl)ether	10	330	8270
Bis(2-ethylhexyl)phthalate	10	330	8270
4-Bromophenyl phenyl ether	10	330	8270
Butylbenzylphthalate	10	330	8270
4-Chloroaniline	20	660	8270
4-Chloro-3-methylphenol	10	330	8270
2-Chloronaphthalene	10	330	8270
2-Chlorophenol	10	330	8270
4-Chlorophenyl phenyl ether	10	330	8270
Chrysene	10	330	8270
3&4 Methylphenol	10	330	8270
2-Methylphenol	10	330	8270
Diallate	10	330	8270
Dibenzofuran	10	330	8270
Di-n-butyl phthalate	10	330	8270
Dibenzo(a,h)anthracene	10	330	8270
o-Dichlorobenzene	10	330	8270
m-Dichlorobenzene	10	330	8270
p-Dichlorobenzene	10	330	8270
3,3'-Dichlorobenzidine	20	660	8270
2,4-Dichlorophenol	10	330	8270
2,6-Dichlorophenol	10	330	8270
Diethylphthalate	10	330	8270
p-(Dimethylamino)azobenzene	10	330	8270
7,12-Dimethyl benz(a)anthracene	10	330	8270

TABLE 3-3

METHOD PERFORMANCE LIMITS
APPENDIX IX COMPOUND LIST AND CONTRACT
REQUIRED QUANTITATION LIMITS (CRQL)

Semivolatiles (Cont.)	Quantitation Limits*		Method Number
	Water (mg/L)	Low Soil (mg/kg)	
3,3-Dimethyl benzidine	20	1,700	8270
2,4-Dimethylphenol	10	330	8270
alpha, alpha-Dimethylphenethylamine	2,000	67,000	8270
Dimethyl phthalate	10	330	8270
m-Dinitrobenzene	10	330	8270
4,6-Dinitro-2-methylphenol	50	1,700	8270
2,4-Dinitrophenol	50	1,700	8270
2,4-Dinitrotoluene	10	330	8270
2,6-Dinitrotoluene	10	330	8270
Di-n-octylphthalate	10	330	8270
1,4-Dioxane	10	330	8270
Dinoseb	10	330	8270
Ethylmethanesulfonate	10	330	8270
Fluoranthene	10	330	8270
Fluorene	10	330	8270
Hexachlorobenzene	10	330	8270
Hexachlorobutadiene	10	330	8270
Hexachlorocyclopentadiene	10	330	8270
Hexachloroethane	10	330	8270
Hexachlorophene	5,000	170,000	8270
Hexachloropropene	10	330	8270
Indeno(1,2,3-cd)pyrene	10	330	8270
Isophorone	10	330	8270
Isosafrole	10	330	8270
Methapyrilene	2,000	67,000	8270
3-Methylcholanthrene	10	330	8270
Methyl methanesulfonate	10	330	8270
2-Methylnaphthalene	10	330	8270
Naphthalene	10	330	8270
1,4-Naphthoquinone	10	330	8270
1-Naphthylamine	10	330	8270
2-Naphthylamine	10	330	8270
2-Nitroaniline	50	1,700	8270
3-Nitroaniline	50	1,700	8270
4-Nitroaniline	50	1,700	8270
Nitrobenzene	10	330	8270
2-Nitrophenol	10	330	8270
4-Nitrophenol	50	1,700	8270
4-Nitroquinoline-1-oxide	20	3,300	8270
n-Nitrosodi-n-butylamine	10	330	8270

TABLE 3-3

METHOD PERFORMANCE LIMITS
APPENDIX IX COMPOUND LIST AND CONTRACT
REQUIRED QUANTITATION LIMITS (CRQL)

Semivolatiles (Cont.)	Quantitation Limits*		Method Number
	Water (mg/L)	Low Soil (mg/kg)	
n-Nitrosodiethylamine	10	330	8270
n-Nitrosodimethylamine	10	330	8270
n-Nitrosodiphenylamine	NA	330	8270
n-Nitrosodi-n-propylamine	10	330	8270
n-Nitrosomethylethylamine	10	330	8270
n-Nitrosomorpholine	10	330	8270
n-Nitrosopiperidine	10	330	8270
n-Nitrosopyrrolidine	10	330	8270
5-Nitro-o-toluidine	10	330	8270
bis-(2-chloroisopropyl)ether	10	330	8270
Pentachlorobenzene	10	330	8270
Pentachloronitrobenzene	10	330	8270
Pentachlorophenol	50	1,700	8270
Phenacetin	10	330	8270
Phenanthrene	10	330	8270
Phenol	10	330	8270
1,4-Phenylenediamine	2,000	1,700	8270
2-Picolin	10	330	8270
Pronamide	10	330	8270
Pyrene	10	330	8270
Pyridine	50	330	8270
Safrole	10	330	8270
1,2,4,5-Tetrachlorobenzene	10	330	8270
2,3,4,6-Tetrachlorophenol	10	330	8270
o-Toluidine	10	330	8270
1,2,4-Trichlorobenzene	10	330	8270
2,4,5-Trichlorophenol	10	330	8270
2,4,6-Trichlorophenol	10	330	8270
1,3,5-Trinitrobenzene	10	330	8270

* Quantitation limits listed for soil/sediment are based on wet weight. The quantitation limits calculated by the laboratory for soil/sediment, calculated on dry weight basis, will be higher.

NA = Not Available

TABLE 3-3

METHOD PERFORMANCE LIMITS
APPENDIX IX COMPOUND LIST AND CONTRACT
REQUIRED QUANTITATION LIMITS (CRQL)

Pesticides/PCBs	Quantitation Limits*		Method Number
	Water (mg/L)	Low Soil (mg/kg)	
Aldrin	0.05	1.7	8081
Alpha-BHC	0.05	1.7	8081
beta-BHC	0.05	1.7	8081
delta-BHC	0.05	1.7	8081
gamma-BHC	0.05	1.7	8081
Chlordane	0.5	17	8081
Chlorobenzilate	0.5	17	8081
4,4'-DDT	0.1	3.3	8081
4,4'-DDE	0.1	3.3	8081
4,4'-DDD	0.1	3.3	8081
Dieldrin	0.1	3.3	8081
Endosulfan I	0.05	1.7	8081
Endosulfan II	0.1	3.3	8081
Endosulfan sulfate	0.1	3.3	8081
Endrin	0.1	3.3	8081
Isodrin	0.05	3.3	8081
Kepone	1.0	170	8081
Toxaphene	5.0	170	8081
Endrin Aldehyde	0.1	3.3	8081
Heptachlor	0.05	1.7	8081
Heptachlor epoxide	0.05	1.7	8081
Methyoxychlor	0.5	17	8081
Aroclor-1016	1.0	33	8082
Aroclor-1221	2.0	67	8082
Aroclor-1232	1.0	33	8082
Aroclor-1242	1.0	33	8082
Aroclor-1248	1.0	33	8082
Aroclor-1254	1.0	33	8082
Aroclor-1260	1.0	33	8082

* Quantitation limits listed for soil/sediment are based on wet weight. The quantitation limits calculated by the laboratory for soil/sediment, calculated on dry weight basis, will be higher.

TABLE 3-3

METHOD PERFORMANCE LIMITS
APPENDIX IX COMPOUND LIST AND CONTRACT
REQUIRED QUANTITATION LIMITS (CRQL)

OP-Pesticides	Quantitation Limits*		Method Number
	Water (mg/L)	Low Soil (mg/kg)	
Dimethoate	10	330	8270
Disulfoton	NA	330	8270
Famphur	10	330	8270
Methyl parathion	10	330	8270
o,o,o-Triethylphosphorothioate	10	330	8270
Parathion	10	330	8270
Phorate	10	330	8270
Sulfotepp	10	330	8270
Thionazin	10	330	8270

* Quantitation limits listed for soil/sediment are based on wet weight. The quantitation limits calculated by the laboratory for soil/sediment, calculated on dry weight basis, will be higher.

NA = Not Available

TABLE 3-3

METHOD PERFORMANCE LIMITS
APPENDIX IX COMPOUND LIST AND CONTRACT
REQUIRED QUANTITATION LIMITS (CRQL)

Dioxins/Furans (SW-846 Method 8280)	Quantitation Limits*		Method Number
	Water (mg/L)	Low Soil (mg/kg)	
2,3,7,8-TCDD	0.005	0.50	8280
2,3,7,8-PCDF	0.005	0.50	8280
2,3,7,8-PCDD	0.005	0.50	8280
2,3,7,8-HCDF	0.005	0.50	8280
2,3,7,8-HCDD	0.005	0.50	8280
2,3,7,8-TCDF	0.005	0.50	8280

* Quantitation limits listed for soil/sediment are based on wet weight. The quantitation limits calculated by the laboratory for soil/sediment, calculated on dry weight basis, will be higher.

TABLE 3-3

METHOD PERFORMANCE LIMITS
APPENDIX IX COMPOUND LIST AND CONTRACT
REQUIRED QUANTITATION LIMITS (CRQL)

Chlorinated Herbicides	Quantitation Limits*		Method Number
	Water (mg/L)	Low Soil (mg/kg)	
2,4-D	0.50	8.3	8151
2,4,5-T	0.50	8.3	8151
2,4,5-TP	0.50	8.3	8151

* Quantitation limits listed for soil/sediment are based on wet weight. The quantitation limits calculated by the laboratory for soil/sediment, calculated on dry weight basis, will be higher.

TABLE 3-3

METHOD PERFORMANCE LIMITS
APPENDIX IX COMPOUND LIST AND CONTRACT
REQUIRED QUANTITATION LIMITS (CRQL)

Inorganics	Method Number	Quantitation Limits* Water (mg/L)	Quantitation Limits* Low Soil (mg/kg)	Method Description
Antimony	6010	20	2.0	Inductively Coupled Plasma
Arsenic	6010	10	1.0	Inductively Coupled Plasma
Barium	6010	10	1.0	Inductively Coupled Plasma
Beryllium	6010	4.0	0.4	Inductively Coupled Plasma
Cadmium	6010	5.0	0.5	Inductively Coupled Plasma
Chromium	6010	10	1.0	Inductively Coupled Plasma
Cobalt	6010	10	1.0	Inductively Coupled Plasma
Copper	6010	20	2.0	Inductively Coupled Plasma
Lead	6010	5.0	0.5	Inductively Coupled Plasma
Mercury	7470/7471	0.2	0.02	Cold Vapor AA
Nickel	6010	40	4.0	Inductively Coupled Plasma
Selenium	6010	10	1.0	Inductively Coupled Plasma
Silver	6010	10	1.0	Inductively Coupled Plasma
Thallium	6010	10	1.0	Inductively Coupled Plasma
Tin	6010	10	5.0	Inductively Coupled Plasma
Vanadium	6010	10	1.0	Inductively Coupled Plasma
Cyanide	9012	0.010	1.0	Colorimetric
Sulfide	9030	1.0	25	Titrimetric, Iodine
Zinc	6010	20	2.0	Inductively Coupled Plasma

* Quantitation limits listed for soil/sediment are based on wet weight. The quantitation limits calculated by the laboratory for soil/sediment, calculated on dry weight basis, will be higher.

TABLE 3-4

METHOD PERFORMANCE LIMITS
EXPLOSIVES AND EXPLOSIVE RESIDUES AND CONTRACT
REQUIRED QUANTITATION LIMITS (CRQL)

Explosives and Explosive Residues	Quantitation Limits*		Method Number
	Water (mg/L)	Low Soil (mg/kg)	
Octahydro-1,3,5,5-tetranitro-1,3,5,7-tetrazocine	0.37	130	8330
Hexahydro-1,3,5-trinitro-1,3,5-triazine	0.14	99	8330
1,3,5-Trinitrobenzene	0.059	50	8330
1,3-Dinitrobenzene	0.04	39	8330
Methyl-2,4,6-trinitro-phenylnitramine	0.14	220	8330
Nitrobenzene	0.13	130	8330
2,4,6-Trinitrotoluene	0.068	74	8330
4-Amino-2,6-dinitrotoluene	0.13	150	8330
2-Amino-4,6-dinitrotoluene	0.11	130	8330
2,4-Dinitrotoluene	0.053	39	8330
2,6-Dinitrotoluene	0.088	87	8330
2-Nitrotoluene	0.087	77	8330
3-Nitrotoluene	0.23	140	8330
4-Nitrotoluene	0.27	130	8330
Nitroglycerin	30	1000	8332
Pentaerythritol tetranitrate	20	1000	8330

* Quantitation limits listed for soil/sediment are based on wet weight. The quantitation limits calculated by the laboratory for soil/sediment, calculated on dry weight basis, will be higher.

FIGURES

2099800W

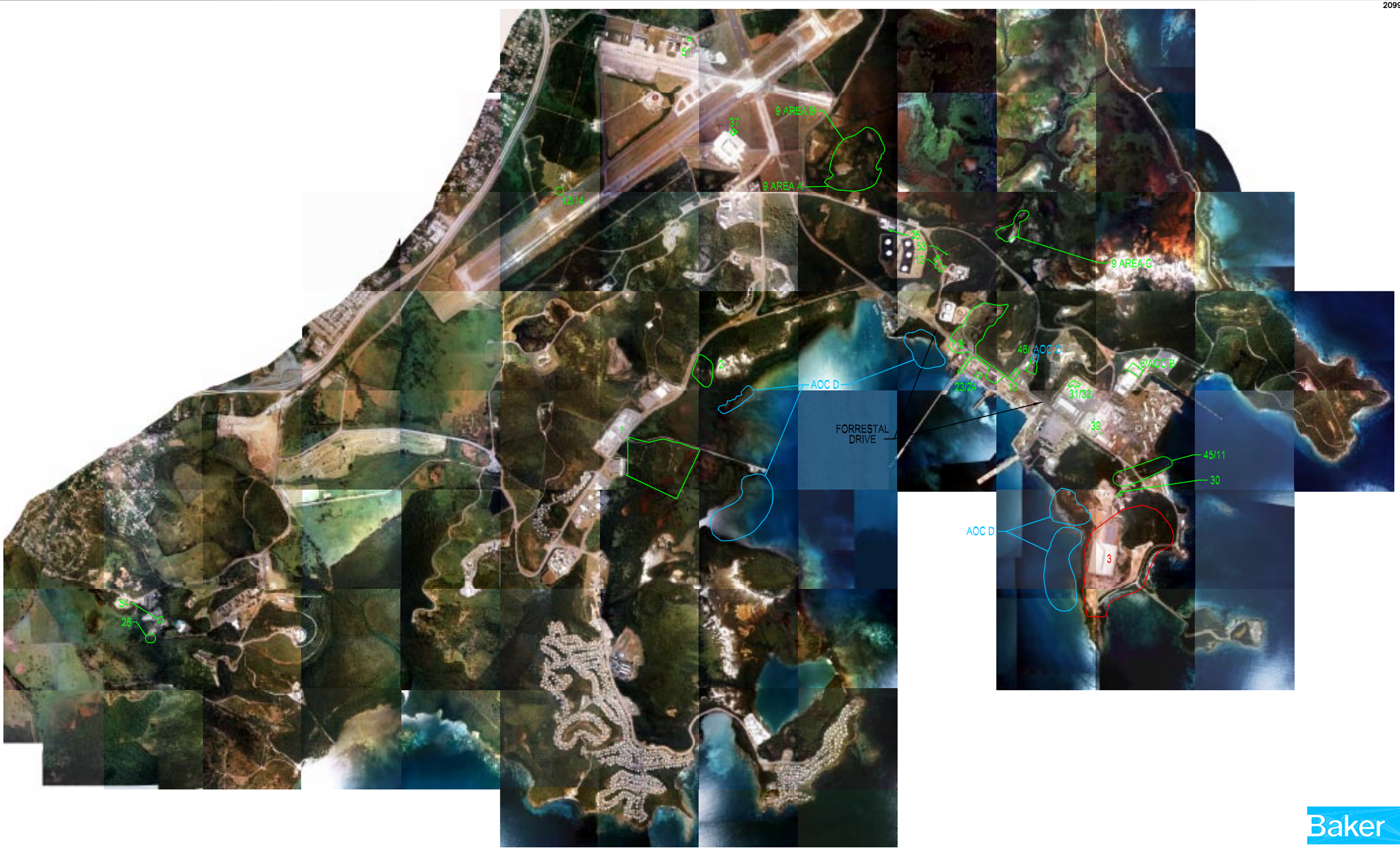

Baker

LEGEND

9 – SWMUs

3 – AREA OF WHICH THIS INVESTIGATION PERTAINS TO

AOC D – AOCs

SOURCE: GEO-MARINE, INC., SEPTEMBER 6, 2000.

2500 0 1250 2500

1 inch = 2500 ft.

FIGURE 1-1
SWMU/AOC LOCATION MAP

NAVAL STATION ROOSEVELT ROADS
PUERTO RICO

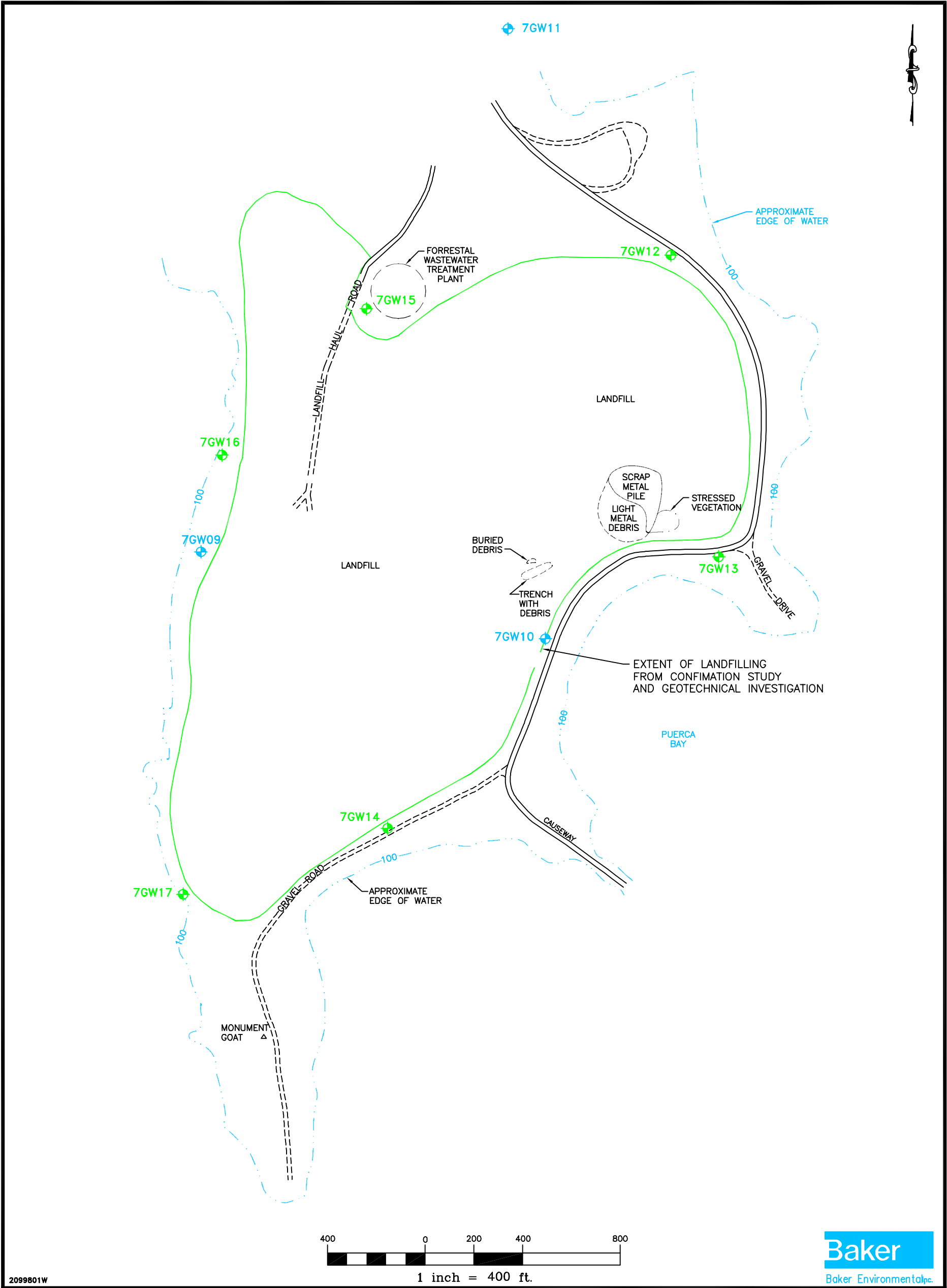

2099801W

Baker
Baker Environmental, Inc.

LEGEND

- MONITOR WELL LOCATION (INSTALLED JUNE 1998, BURNS AND McDONNELL)
- MONITOR WELL LOCATION (INSTALLED DECEMBER 2000, BAKER)

SOURCE: LANTDIV, FEB. 1992

FIGURE 3-1
SAMPLE LOCATION MAP
SWMU 3, BASE LANDFILL

NAVAL STATION ROOSEVELT ROADS
PUERTO RICO

Figure 6-1
SWMU 3 Proposed RFI Schedule
Naval Station Roosevelt Roads, Ceiba, Puerto Rico

ID	Task Name	Duration	Start	Finish
1	***SWMU 3 RFI***	500 edays	12/6/01	4/20/03
2	**Draft RFI Work Plan**	11 edays	12/6/01	12/17/01
3	Develop Work Plan	7 edays	12/6/01	12/13/01
4	Navy Review	2 edays	12/13/01	12/15/01
5	Address Navy Comments	2 edays	12/15/01	12/17/01
6	**EPA Review**	45 edays	12/18/01	2/1/02
7	**Final RFI Work Plan**	45 edays	2/2/02	3/19/02
8	Revise Draft Work Plan	24 edays	2/2/02	2/26/02
9	Navy Review	14 edays	2/26/02	3/12/02
10	Address Navy Comments	7 edays	3/12/02	3/19/02
11	**EPA Review/Approval**	45 edays	3/20/02	5/4/02
12	**Fieldwork**	63 edays	5/4/02	7/6/02
13	**Draft RFI Report**	60 edays	7/6/02	9/4/02
14	Develop Draft RFI Report	39 edays	7/6/02	8/14/02
15	Navy Review	14 edays	8/14/02	8/28/02
16	Address Navy Comments	7 edays	8/28/02	9/4/02
17	**EPA Review**	45 edays	9/5/02	10/20/02
18	**Draft Final RFI Report**	45 edays	10/20/02	12/4/02
19	Revise Draft RFI Report	24 edays	10/20/02	11/13/02
20	Navy Review	14 edays	11/13/02	11/27/02
21	Address Navy Comments	7 edays	11/27/02	12/4/02
22	**EPA Review**	45 edays	12/5/02	1/19/03
23	**Final RFI Report**	45 edays	1/19/03	3/5/03
24	Revise Draft Final RFI Report	24 edays	1/19/03	2/12/03
25	Navy Review	14 edays	2/12/03	2/26/03
26	Address Navy Comments	7 edays	2/26/03	3/5/03
27	**EPA Review/Approval**	45 edays	3/6/03	4/20/03

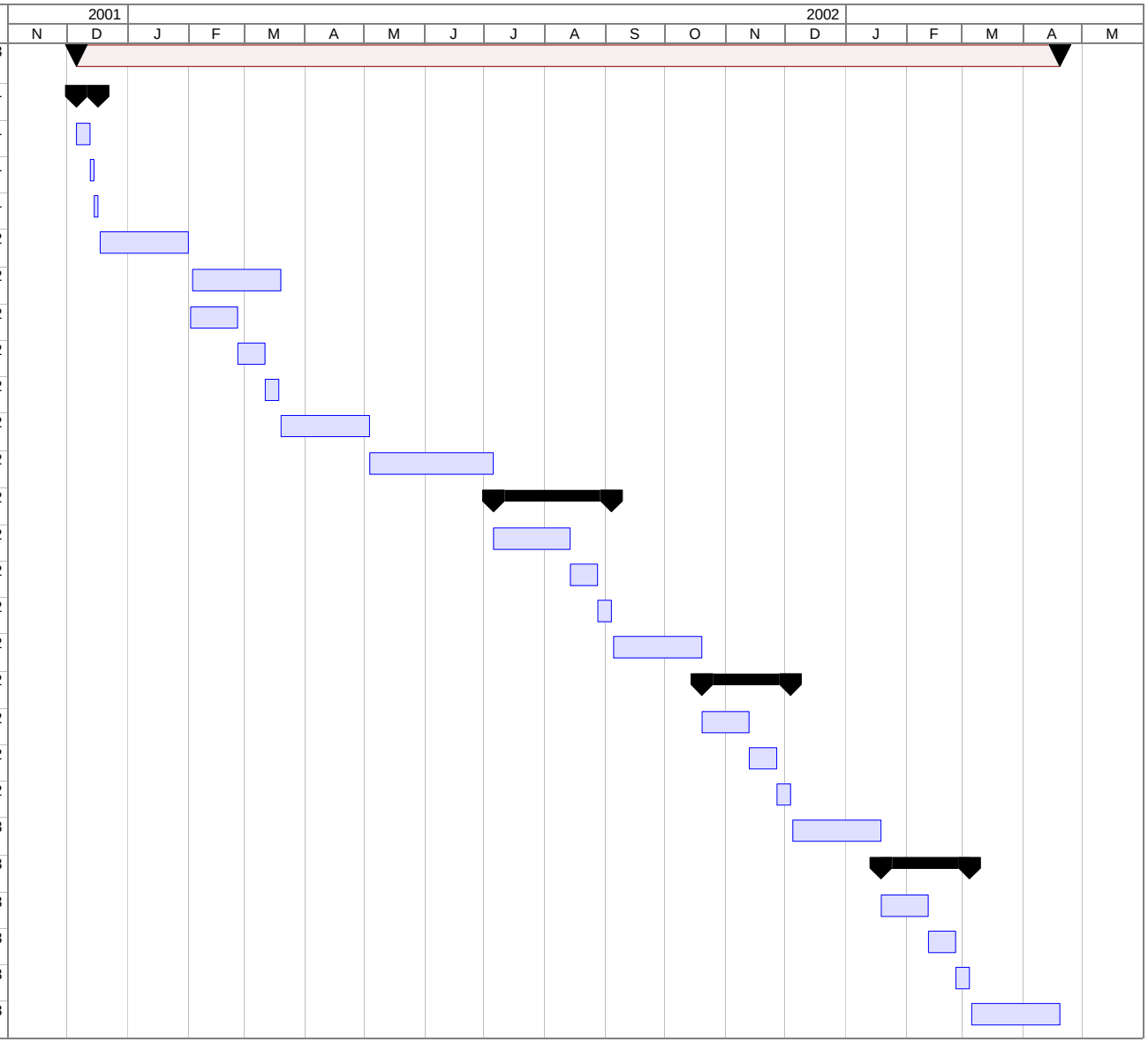

Project: SWMU3
12/13/01

Submittal dates are dependent upon Government review calendar days.

APPENDIX A
GROUNDWATER SAMPLING PROCEDURE LOW STRESS (LOW FLOW) PURGING AND SAMPLING

U.S. ENVIRONMENTAL PROTECTION AGENCY
REGION II

GROUND WATER SAMPLING PROCEDURE
LOW STRESS (Low Flow) PURGING AND SAMPLING

I. SCOPE & APPLICATION

This Low Stress (or Low-Flow) Purging and Sampling Procedure is the EPA Region II standard method for collecting low stress (low flow) ground water samples from monitoring wells. Low stress Purging and Sampling results in collection of ground water samples from monitoring wells that are representative of ground water conditions in the geological formation. This is accomplished by minimizing stress on the geological formation and minimizing disturbance of sediment that has collected in the well. The procedure applies to monitoring wells that have an inner casing with a diameter of 2.0 inches or greater, and maximum screened intervals of ten feet unless multiple intervals are sampled. The procedure is appropriate for collection of ground water samples that will be analyzed for volatile and semi-volatile organic compounds (VOCs and SVOCs), pesticides, polychlorinated biphenyls (PCBs), metals, and microbiological and other contaminants in association with all EPA programs.

This procedure does not address the collection of light or dense non-aqueous phase liquids (LNAPL or DNAPL) samples, and should be used for aqueous samples only. For sampling NAPLs, the reader is referred to the following EPA publications: DNAPL Site Evaluation (Cohen & Mercer, 1993) and the RCRA Ground-Water Monitoring: Draft Technical Guidance (EPA/530-R-93-001), and references therein.

II. METHOD SUMMARY

The purpose of the low stress purging and sampling procedure is to collect ground water samples from monitoring wells that are representative of ground water conditions in the geological formation. This is accomplished by setting the intake velocity of the sampling pump to a flow rate that limits drawdown inside the well casing.

Sampling at the prescribed (low) flow rate has three primary benefits. First, it minimizes disturbance of sediment in the bottom of the well,

thereby producing a sample with low turbidity (i.e., low concentration of suspended particles). Typically, this saves time and analytical costs by eliminating the need for collecting and analyzing an additional filtered sample from the same well. Second, this procedure minimizes aeration of the ground water during sample collection, which improves the sample quality for VOC analysis. Third, in most cases the procedure significantly reduces the volume of ground water purged from a well and the costs associated with its proper treatment and disposal.

III. ADDRESSING POTENTIAL PROBLEMS

Problems that may be encountered using this technique include a) difficulty in sampling wells with insufficient yield; b) failure of one or more key indicator parameters to stabilize; c) cascading of water and/or formation of air bubbles in the tubing; and d) cross-contamination between wells.

Insufficient Yield

Wells with insufficient yield (i.e., low recharge rate of the well) may dewater during purging. Care should be taken to avoid loss of pressure in the tubing line due to dewatering of the well below the level of the pump=s intake. Purging should be interrupted before the water level in the well drops below the top of the pump, as this may induce cascading of the sand pack. Pumping the well dry should therefore be avoided to the extent possible in all cases. Sampling should commence as soon as the volume in the well has recovered sufficiently to allow collection of samples. Alternatively, ground water samples may be obtained with techniques designed for the unsaturated zone, such as lysimeters.

Failure to Stabilize Key Indicator Parameters

If one or more key indicator parameters fails to stabilize after 4 hours, one of four options should be considered: a) continue purging in an attempt to achieve stabilization; b) discontinue purging, do not collect samples, and document attempts to reach stabilization in the log book; c) discontinue purging, collect samples, and document attempts to reach stabilization in the log book; or d) Secure the well, purge and collect samples the next day (preferred). The key indicator parameter for samples to be analyzed for VOCs is dissolved

oxygen. The key indicator parameter for all other samples is turbidity.

Cascading

To prevent cascading and/or air bubble formation in the tubing, care should be taken to ensure that the flow rate is sufficient to maintain pump suction. Minimize the length and diameter of tubing (i.e., 1/4 or 3/8 inch ID) to ensure that the tubing remains filled with ground water during sampling.

Cross-Contamination

To prevent cross-contamination between wells, it is strongly recommended that dedicated, in-place pumps be used. As an alternative, the potential for cross-contamination can be reduced by performing the more thorough Adaily@ decontamination procedures between sampling of each well in addition to the start of each sampling day (see Section VII, below).

Equipment Failure

Adequate equipment should be on-hand so that equipment failures do not adversely impact sampling activities.

IV. PLANNING DOCUMENTATION AND EQUIPMENT

< Approved site-specific Field Sampling Plan/Quality Assurance Project Plan (QAPP). This plan must specify the type of pump and other equipment to be used. The QAPP must also specify the depth to which the pump intake should be lowered in each well. Generally, the target depth will correspond to the mid-point of the most permeable zone in the screened interval. Borehole geologic and geophysical logs can be used to help select the most permeable zone. However, in some cases, other criteria may be used to select the target depth for the pump intake. In all cases, the target depth must be approved by the EPA hydrogeologist or EPA project scientist.

< Well construction data, location map, field data from last sampling event.

< Polyethylene sheeting.

< Flame Ionization Detector (FID) and Photo Ionization Detector (PID).

< Adjustable rate, positive displacement ground water sampling pump (e.g., centrifugal or bladder pumps constructed of stainless steel or Teflon). A peristaltic pump may only be used for inorganic sample collection.

< Interface probe or equivalent device for determining the presence or absence of NAPL.

< Teflon or Teflon-lined polyethylene tubing to collect samples for organic analysis. Teflon or Teflon-lined polyethylene, PVC, Tygon or polyethylene tubing to collect samples for inorganic analysis. Sufficient tubing of the appropriate material must be available so that each well has dedicated tubing.

< Water level measuring device, minimum 0.01 foot accuracy, (electronic preferred for tracking water level drawdown during all pumping operations).

< Flow measurement supplies (e.g., graduated cylinder and stop watch or in-line flow meter).

< Power source (generator, nitrogen tank, etc.).

< Monitoring instruments for indicator parameters. Eh and dissolved oxygen must be monitored in-line using an instrument with a continuous readout display. Specific conductance, pH, and temperature may be monitored either in-line or using separate probes. A nephalometer is used to measure turbidity.

< Decontamination supplies (see Section VII, below).

< Logbook (see Section VIII, below).

< Sample bottles.

< Sample preservation supplies (as required by the analytical methods).

< Sample tags or labels, chain of custody.

V. SAMPLING PROCEDURES

Pre-Sampling Activities

1. Start at the well known or believed to have the least contaminated ground water and proceed systematically to the well with the most contaminated ground water. Check the well, the lock, and the locking cap for damage or evidence of tampering. Record observations.

2. Lay out sheet of polyethylene for placement of monitoring and sampling equipment.

3. Measure VOCs at the rim of the unopened well with a PID and FID instrument and record the reading in the field log book.

4. Remove well cap.

5. Measure VOCs at the rim of the opened well with a PID and an FID instrument and record the reading in the field log book.
6. If the well casing does not have a reference point (usually a V-cut or indelible mark in the well casing), make one. Note that the reference point should be surveyed for correction of ground water elevations to the mean geodesic datum (MSL).

7. Measure and record the depth to water (to 0.01 ft) in all wells to be sampled prior to purging. Care should be taken to minimize disturbance in the water column and dislodging of any particulate matter attached to the sides or settled at the bottom of the well.

8. If desired, measure and record the depth of any NAPLs using an interface probe. Care should be taken to minimize disturbance of any sediment that has accumulated at the bottom of the well. Record the observations in the log book. If LNAPLs and/or DNAPLs are detected, install the pump at this time, as described in step 9, below. Allow the well to sit for several days between the measurement or sampling of any DNAPLs and the low-stress purging and sampling of the ground water.

Sampling Procedures

9. Install Pump: Slowly lower the pump, safety cable, tubing and electrical lines into the well to the depth specified for that

well in the EPA-approved QAPP or a depth otherwise approved by the EPA hydrogeologist or EPA project scientist. The pump intake must be kept at least two (2) feet above the bottom of the well to prevent disturbance and resuspension of any sediment or NAPL present in the bottom of the well. Record the depth to which the pump is lowered.

10. Measure Water Level: Before starting the pump, measure the water level again with the pump in the well. Leave the water level measuring device in the well.

11. Purge Well: Start pumping the well at 200 to 500 milliliters per minute (ml/min). The water level should be monitored approximately every five minutes. Ideally, a steady flow rate should be maintained that results in a stabilized water level (drawdown of 0.3 ft or less). Pumping rates should, if needed, be reduced to the minimum capabilities of the pump to ensure stabilization of the water level. As noted above, care should be taken to maintain pump suction and to avoid entrainment of air in the tubing. Record each adjustment made to the pumping rate and the water level measured immediately after each adjustment.

12. Monitor Indicator Parameters: During purging of the well, monitor and record the field indicator parameters (turbidity, temperature, specific conductance, pH, Eh, and DO) approximately every five minutes. The well is considered stabilized and ready for sample collection when the indicator parameters have stabilized for three consecutive readings as follows (Puls and Barcelona, 1996):

    ±0.1 for pH
    ±3% for specific conductance (conductivity)
    ±10 mv for redox potential
    ±10% for DO and turbidity

    Dissolved oxygen and turbidity usually require the longest time to achieve stabilization. The pump must not be removed from the well between purging and sampling.

13. Collect Samples: Collect samples at a flow rate between 100 and 250 ml/min and such that drawdown of the water level within the well does not exceed the maximum allowable drawdown of 0.3 ft. VOC samples must be collected first and directly into sample

containers. All sample containers should be filled with minimal turbulence by allowing the ground water to flow from the tubing gently down the inside of the container.

Ground water samples to be analyzed for volatile organic compounds (VOCs) require pH adjustment. The appropriate EPA Program Guidance should be consulted to determine whether pH adjustment is necessary. If pH adjustment is necessary for VOC sample preservation, the amount of acid to be added to each sample vial prior to sampling should be determined, drop by drop, on a separate and equal volume of water (e.g., 40 ml). Ground water purged from the well prior to sampling can be used for this purpose.

14. Remove Pump and Tubing: After collection of the samples, the tubing, unless permanently installed, must be properly discarded or dedicated to the well for resampling by hanging the tubing inside the well.

15. Measure and record well depth.

16. Close and lock the well.

VI. FIELD QUALITY CONTROL SAMPLES

Quality control samples must be collected to determine if sample collection and handling procedures have adversely affected the quality of the ground water samples. The appropriate EPA Program Guidance should be consulted in preparing the field QC sample requirements of the site-specific QAPP.

All field quality control samples must be prepared exactly as regular investigation samples with regard to sample volume, containers, and preservation. The following quality control samples should be collected during the sampling event:

< Field duplicates
< Trip blanks for VOCs only
< Equipment blank (not necessary if equipment is dedicated to the well)

As noted above, ground water samples should be collected systematically from wells with the lowest level of contamination

through to wells with highest level of contamination. The equipment blank should be collected after sampling from the most contaminated well.

VII. DECONTAMINATION

Non-disposable sampling equipment, including the pump and support cable and electrical wires which contact the sample, must be decontaminated thoroughly each day before use (Adaily decon@) and after each well is sampled (Abetween-well decon@). Dedicated, in-place pumps and tubing must be thoroughly decontaminated using Adaily decon@ procedures (see #17, below) prior to their initial use. For centrifugal pumps, it is strongly recommended that non-disposable sampling equipment, including the pump and support cable and electrical wires in contact with the sample, be decontaminated thoroughly each day before use (Adaily decon@).

EPA=s field experience indicates that the life of centrifugal pumps may be extended by removing entrained grit. This also permits inspection and replacement of the cooling water in centrifugal pumps. All non-dedicated sampling equipment (pumps, tubing, etc.) must be decontaminated after each well is sampled (Abetween-well decon,@ see #18 below).

17. **Daily Decon**

A) Pre-rinse: Operate pump in a deep basin containing 8 to 10 gallons of potable water for 5 minutes and flush other equipment with potable water for 5 minutes.

B) Wash: Operate pump in a deep basin containing 8 to 10 gallons of a non-phosphate detergent solution, such as Alconox, for 5 minutes and flush other equipment with fresh detergent solution for 5 minutes. Use the detergent sparingly.

C) Rinse: Operate pump in a deep basin of potable water for 5 minutes and flush other equipment with potable water for 5 minutes.

D) Disassemble pump.

E) Wash pump parts: Place the disassembled parts of the pump into a deep basin containing 8 to 10 gallons of non-phosphate

detergent solution. Scrub all pump parts with a test tube brush.

F) Rinse pump parts with potable water.

G) Rinse the following pump parts with distilled/ deionized water: inlet screen, the shaft, the suction interconnector, the motor lead assembly, and the stator housing.

H) Place impeller assembly in a large glass beaker and rinse with 1% nitric acid (HNO_3).

I) Rinse impeller assembly with potable water.

J) Place impeller assembly in a large glass bleaker and rinse with isopropanol.

K) Rinse impeller assembly with distilled/deionized water.

18. **Between-Well Decon**

A) Pre-rinse: Operate pump in a deep basin containing 8 to 10 gallons of potable water for 5 minutes and flush other equipment with potable water for 5 minutes.
B) Wash: Operate pump in a deep basin containing 8 to 10 gallons of a non-phosphate detergent solution, such as Alconox, for 5 minutes and flush other equipment with fresh detergent solution for 5 minutes. Use the detergent sparingly.

C) Rinse: Operate pump in a deep basin of potable water for 5 minutes and flush other equipment with potable water for 5 minutes.

D) Final Rinse: Operate pump in a deep basin of distilled/deionized water to pump out 1 to 2 gallons of this final rinse water.

VIII. FIELD LOG BOOK

A field log book must be kept each time ground water monitoring activities are conducted in the field. The field log book should document the following:

- Well identification number and physical condition.
- Well depth, and measurement technique.
- Static water level depth, date, time, and measurement technique.
- Presence and thickness of immiscible liquid layers and detection method.
- Collection method for immiscible liquid layers.
- Pumping rate, drawdown, indicator parameters values, and clock time, at three to five minute intervals; calculate or measure total volume pumped.
- Well sampling sequence and time of sample collection.
- Types of sample bottles used and sample identification numbers.
- Preservatives used.
- Parameters requested for analysis.
- Field observations of sampling event.
- Name of sample collector(s).
- Weather conditions.
- QA/QC data for field instruments.

IX. REFERENCES

Cohen, R.M. and J.W. Mercer, 1993, DNAPL Site Evaluation, C.K. Smoley Press, Boca Raton, Florida.

Puls, R.W. and M.J. Barcelona, 1996, Low-Flow (Minimal Drawdown) Ground-water Sampling Procedures, EPA/540/S-95/504.

U.S. EPA, 1993, RCRA Ground-Water Monitoring: Draft Technical Guidance, EPA/530-R-93-001.

U.S. EPA Region II, 1989, CERCLA Quality Assurance Manual.

APPENDIX B
TEST BORING AND WELL CONSTRUCTION RECORDS

Project Name: USPRICO
Project Number: *95-806-1-001*

Ground Surface Elevation: *108.27*
Top of Casing Elevation: *109.13*
Date Installed: *6/09/98*

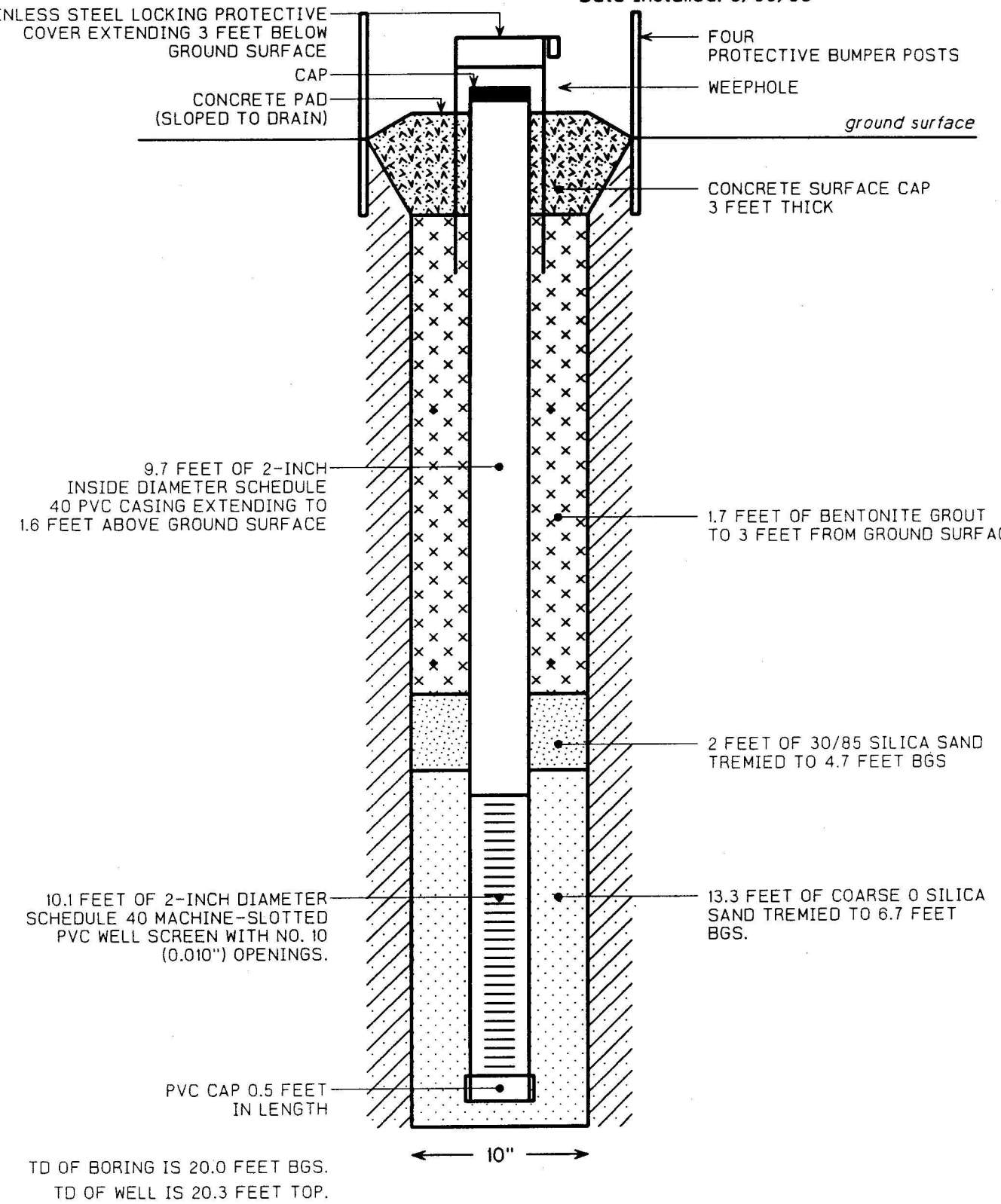

TD OF BORING IS 20.0 FEET BGS.
TD OF WELL IS 20.3 FEET TOP.

MONITORING WELL CONSTRUCTION DIAGRAM FOR R7GW09

NOT TO SCALE

Drilling Log

Project Name	Project Number	Boring Number
USPRICO	95-806-1-001	R7GW09
Ground Elevation 108.27	**Location** N 140,831.94, E 784,895.00	**Page** 1 of 2
Air Monitoring Equipment TOXI RAE PID SN 000251		**Total Footage** 20.0

Drilling Type	Hole Size	Overburden Footage	Bedrock Footage	No. Of Samples	No. Of Core Boxes
HSA	10"	20.0	0	4	0

Drilling Company SOIL TECH	**Driller (s)** JORGE DIAZ, AUREO DIAZ, VINCENTE PEREZ
Drilling Rig ACKER AD-2	**Type of Sampler** SPLIT SPOON
Date 6/8/98 **To** 6/8/98	**Field Observer (s)** ROBERT WOODY

Depth (feet)	Description	Class	Blow Count	Recov.	Run/ Time	Sample Desig.	PID (ppm) BZ	PID (ppm) BH	PID (ppm) S	Remarks/ Water Levels
1	SAND some SILT, 70% to 80% fine sand, 20% t0 30% silt, yellowish orange in color, medium density, dry, indistinct stratification, subrounded to angular texture, carbonate sand.	SM	11/ 11/ 8/ 8	1.1/ 2.0		SS-1				11:35 Start Split Spoon #1 (SS-1). 11:47 Start drilling with 6.25 inch inside diameter (ID) hollow stem auger (HSA) with center plug.
2					11:47/ 11:49		0	0	0	11:54 Collect SS-2.
3			NA	NR		NA				12:01 Very hard drilling at 7.0 feet below ground surface (BGS).
4										12:15 Stop drilling at 7.0 feet BGS. Hit a rock with HSA. The driller is going to remove the HSA from the hole and attempt to drill new hole 10 feet east of present location.
5										
6	Becoming dense at 6.5 feet BGS.		3/ 3/ 9/ 27	0.4/ 2.0		SS-2				13:28 Offset boring 10 feet to the east.
7					11:59/ 13:46		0	0	0	13:30 Start drilling new hole.
8			NA	NR		NA				13:31 Orginal hole collasped to 2.7 feet BGS. Backfilled from 0 to 2.7 feet BGS with native material.
9										
10	GRAVEL some SAND, 60% to 80% fine gravel, 20% to 40% medium sand, olive gray in color, medium density, wet, indistinct stratification, subrounded to angular texture, carbonate sand.	GM	12/ 12/ 9/ 9	1.0/ 2.0		SS-3				13:50 Collected SS-3. Hit water at 10.0 feet BGS.
11					13:53/ 14:03					
12							0	0	0	
13	Gravel increasing to cobble size with depth starting at 13.2 feet BGS.		NA	NR		NA				
14										

BZ=Breathing Zone BH=Bore Hole S=Sample

Drilling Log Continuation

Project Name USPRICO	Boring Number **R7GW09**
Project Number 95-806-1-001	Page 2 of 2
	Date 6/8/98

Depth (feet)	Description	Class	Blow Count	Recov.	Run/ Time	Sample Desig.	PID (ppm) BZ	PID (ppm) BH	PID (ppm) S	Remarks/ Water Levels
	GRAVEL some SAND, 60% to 80% cobble size gravel, 20% to 40% medium sand, olive gray in color, medium density, wet, indistinct stratification, subrounded to angular texture, carbonate sand gravel.	GM	NA	NR	13:53/ 14:03	NA				
15	SAND some SILT, 60% to 80% fine sand, 20% to 40% silt, olive gray in color, very loose density, wet, indistinct stratification, subrounded to subangular texture, carbonate sand.	SM	1/ 1/ 1/ 1	1.6/ 2.0		SS-4				
16										
17					14:21/ 14:27		0	0	0	
18			NA	NR		NA				
19										
20	Total Depth 20.0 ft.									14:32 Stop drilling at 20.0 feet BGS. Total depth of the hole is 20.0 feet BGS. Water level is 15.5 feet BGS.
21										
22										Date 06/09/98 08:25 Water level is at 9.8 feet BGS.
23										09:19 Start monitoring well construction
24										
25										
26										
27										
28										
29										
30										
31										

BZ=Breathing Zone BH=Bore Hole S=Sample

Waste Consultants, Inc.

Project Name: USPRICO
Project Number: *95-806-1-001*

Ground Surface Elevation: *112.06*
Top of Casing Elevation: *114.06*
Date Installed: *6/09/98*

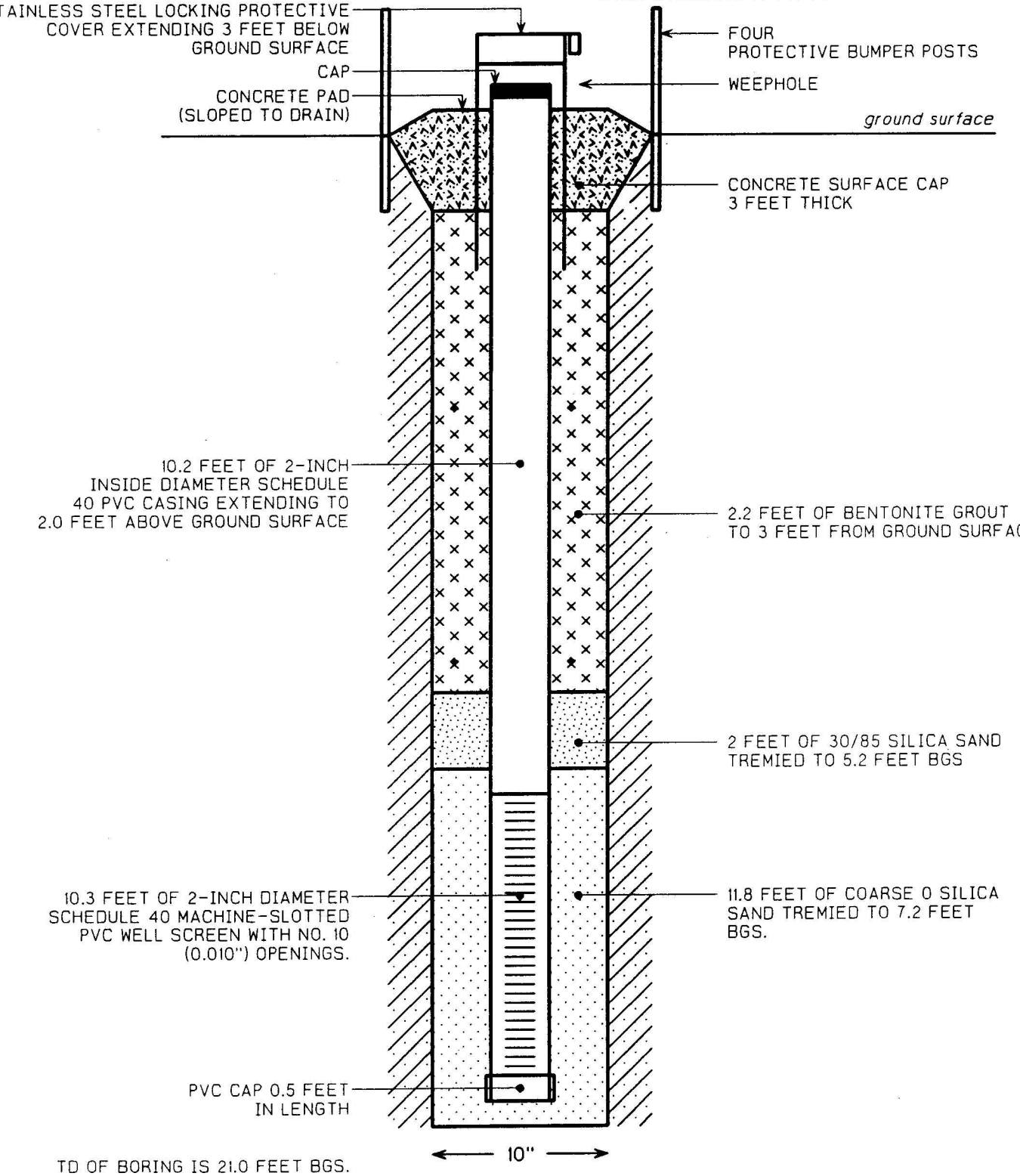

TD OF BORING IS 21.0 FEET BGS.
TD OF WELL IS 21.0 FEET TOP.

MONITORING WELL CONSTRUCTION DIAGRAM FOR R7GW10

NOT TO SCALE

Drilling Log

Project Name: USPRICO	Project Number: 95-806-1-001	Boring Number: R7GW10
Ground Elevation: 112.06	Location: N 140,540.45 E 786,342. 68	Page: 1 of 2
Air Monitoring Equipment: TOXI RAE PID SN 000251		Total Footage: 21.0

Drilling Type	Hole Size	Overburden Footage	Bedrock Footage	No. Of Samples	No. Of Core Boxes
HSA	10"	21.0	0	5	0

Drilling Company: SOIL TECH	Driller (s): JORGE DIAZ, AUREO DIAZ, VINCENTE PEREZ
Drilling Rig: ACKER AD-2	Type of Sampler: SPLIT SPOON
Date: 6/8/98 To: 6/9/98	Field Observer (s): ROBERT WOODY

Depth (feet)	Description	Class	Blow Count	Recov.	Run/ Time	Sample Desig.	PID (ppm) BZ	BH	S	Remarks/ Water Levels
1	SAND some SILT, 60% to 80% fine sand, 20% to 40% silt, light gray in color, loose to medium density, dry, indistinct stratification, subrounded texture, carbonate sand.	SM	7/ 11/ 11/ 8	1.0/ 2.0		SS-1				15:01 Start Split Spoon #1 (SS-1). 15:09 Start drilling with 6.25 inch inside diameter (ID) hollow stem auger (HSA) with center plug.
2			NA	NR	15:09/ 15:14	NA	0	0	0	
3	GRAVEL and SAND, 40% to 80% very fine sand, 20% to 60% cobble size gravel, light gray in color, loose density, dry, indistinct stratification, subangular to angular texture, carbonate sand and gravel.	GM								
4										
5			5/ 3/ 3/ 4	1.6/ 2.0		SS-2				15:20 Collected SS-2.
6										
7			NA	NR	15:24/ 15:30	NA	0	0	0	
8										
9										
10	SAND and SILT, 60% to 80% medium sand, 20% to 40% silt, light gray in color, loose density, damp, indistinct stratification, subrounded to subangular texture, carbonate sand.	SM	HW/ 4/ 4/ 4	1.4/ 2.0		SS-3				HW = Hammer weight pushed spoon without blows. 15:37 Collected SS-3.
11	Becoming wet at 11.8 feet BGS.				07:34/ 07:38					
12			NA	NR		NA	0	0	0	15:47 Stop drilling for the day at 10.0 feet below ground surface (BGS).
13										
14										

BZ=Breathing Zone BH=Bore Hole S=Sample

Waste Consultants, Inc.

Form WCI-OP2-1

Drilling Log Continuation

Project Name USPRICO	Boring Number **R7GW10**
Project Number 95-806-1-001	Page 2 of 2
	Date 6/8/98

Depth (feet)	Description	Class	Blow Count	Recov.	Run/ Time	Sample Desig.	PID (ppm) BZ	PID (ppm) BH	PID (ppm) S	Remarks/ Water Levels
	SAND and SILT, 60% to 80% medium sand, 20% to 40% silt light gray in color, loose density, wet, indistinct stratification, subrounded to subangular texture, carbonate sand.	SM	NA	NR	07:34/ 07:38	NA				Date 6/9 8
15			4/ 6/ 6/ 8	1.6/ 2.0		SS-4				07:34 Start drilling at 10.0 feet BGS.
16										07:47 Collected SS-4.
17					07:55/ 08:00		0	0	0	
18			NA	NR		NA				
19										08:00 Stop drilling at 19.0 feet BGS.
20			3/ 6/ 2/ 3	1.4/ 2.0	NA	SS-5	0	0	0	
21	Total Depth 21.0 ft.									08:05 Collected SS-5. Total depth = 21.0 feet BGS. d.=22 11:09 Water level = 10.2 feet BGS. Started monitoring well construction.
22										
23										
24										
25										
26										
27										
28										
29										
30										
31										

BZ=Breathing Zone BH=Bore Hole S=Sample

Waste Consultants, Inc.

Project Name: USPRICO
Project Number: *95-806-1-001*

Ground Surface Elevation: *110.37*
Top of Casing Elevation: *110.17*
Date Installed: *6/10/98*

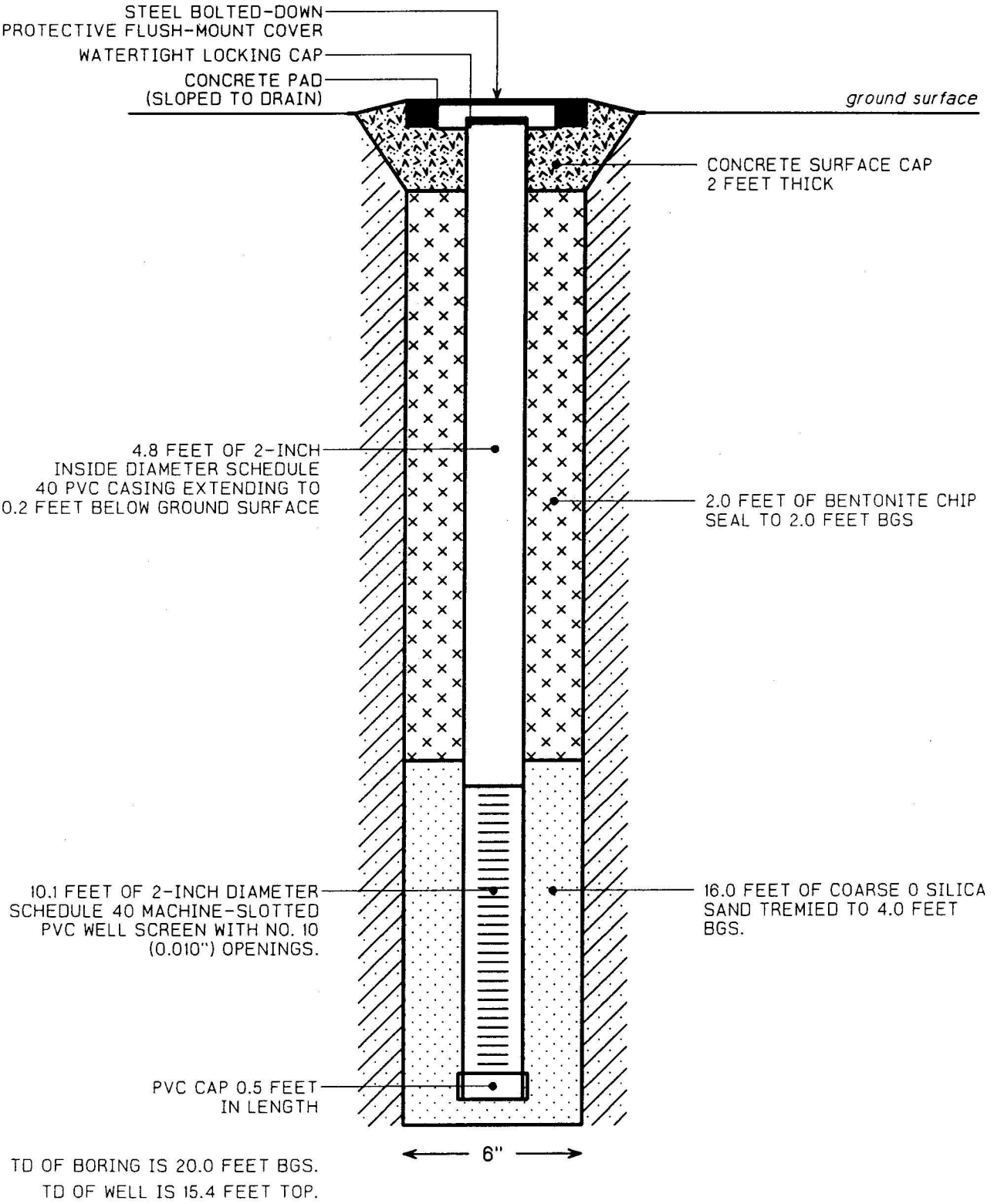

TD OF BORING IS 20.0 FEET BGS.
TD OF WELL IS 15.4 FEET TOP.

MONITORING WELL CONSTRUCTION DIAGRAM FOR R7GW11

NOT TO SCALE

Drilling Log

Project Name	Project Number	Boring Number
USPRICO	95-806-1-001	R7GW11
Ground Elevation 110.37	**Location** N 143,505.41 E 785,913.68	**Page** 1 of 2
Air Monitoring Equipment TOXI RAE PID SN 000251		**Total Footage** 20.0

Drilling Type	Hole Size	Overburden Footage	Bedrock Footage	No. Of Samples	No. Of Core Boxes
HSA	6"	20.0	0	5	0

Drilling Company SOIL TECH	**Driller (s)** JORGE DIAZ, AUREO DIAZ, VINCENTE PEREZ
Drilling Rig ACKER AD-2	**Type of Sampler** SPLIT SPOON
Date 6/9/98 **To** 6/9/98	**Field Observer (s)** ROBERT WOODY

Depth (feet)	Description	Class	Blow Count	Recov.	Run/ Time	Sample Desig.	PID (ppm) BZ	PID (ppm) BH	PID (ppm) S	Remarks/ Water Levels
	SILT, 100% silt, light brown in color, stiff consistency, dry, indistinct stratification, nonplastic, topsoil.	ML								14:28 Start Split Spoon #1 (SS-1).
1	SAND, 50% to 70% medium sand, 30% to 50% fine sand, light yellow in color, loose density, dry, indistinct stratification, angular texture, carbonate sand.	SP	10/ 10/ 8/ 7	1.6/ 2.0		SS-1				14:33 Start drilling with 3.25 inch inside diameter (ID) hollow stem auger (HSA) with center plug.
2					14:33/ 14:35		0	0	0	
3			NA	NR		NA				
4										
5			4/ 2/ 3/ 2	1.7/ 2.0		SS-2				14:39 Collected SS-2.
6										
7	Becoming wet at 7.0 feet BGS.				14:42/ 14:46		0	0	0	
8			NA	NR		NA				
9										
10	CLAY and SAND, 50% to 70% clay, 30% to 50% fine sand, light greenish gray in color, soft consistency medium plasticity, wet indistinct stratification, clay and carbonate sand.	CL	2 1 blow per 12"	2.0/ 2.0		SS-3				HW = Hammer weight pushed split spoon without blows. 14:50 Collected SS-3.
11					14:53/ 14:55					
12							0	0	0	
13			NA	NR		NA				
14										

BZ=Breathing Zone BH=Bore Hole S=Sample

Drilling Log Continuation

Project Name USPRICO	Boring Number **R7GW11**
Project Number 95-806-1-001	Page 2 of 2
	Date 6/9/98

Depth (feet)	Description	Class	Blow Count	Recov.	Run/ Time	Sample Desig.	PID (ppm) BZ	PID (ppm) BH	PID (ppm) S	Remarks/ Water Levels
	CLAY and SAND, 50% to 70% clay, 30% to 50% fine sand, light greenish gray in color, soft consistency medium plasticity, wet indistinct stratification, clay and carbonate sand.	CL	NA	NR	14:53/ 14:55	NA				
15										
16			HW	2.0/ 2.0		SS-4				15:00 Collected SS-4.
17					15:03/ 15:05		0	0	0	
18			NA	NR		NA				
19										
20										15:05 Stop drilling at 20.0 feet below ground surface (BGS).
21			HW	2.0/ 2.0	NA	SS-5	0	0	0	
22	Total Depth 22.0 ft.									15:10 Collected SS-5. Total depth of hole is 22.0 feet BGS.
23										
24										Date 6/10/98 08:23 Water level = 11.70 feet BGS. 10:01 Water level = 11.35 feet BGS.
25										12:56 Water level = 10.80 feet BGS.
26										Date 6/11/98 07:22 Water level = 9.70 feet BGS.
27										07:35 Start monitoring well construction.
28										
29										
30										
31										

BZ=Breathing Zone BH=Bore Hole S=Sample

Baker

Baker Environmental

TEST BORING AND WELL CONSTRUCTION RECORD

PROJECT:	SMWU 3 - Well Replacement		
PROJ. NO.:	CTO-099	BORING NO.:	7GW12
COORDINATES:	EAST: 786926.68	NORTH:	142388.18
ELEVATION:	SURFACE: 108.90	TOP OF PVC CASING:	111.33

Rig: Mobile B-61

	Split Spoon	Casing	Augers	Core Barrel	Date	Progress (Ft.)	Weather	Depth to Water (Ft.)
Size (ID)	1-3/8-in	--	4-1/4-in	--	12/13/00	0.0 - 14.0	M sunny, mid 70s	13.5
Length	2-ft	--	5-ft	--	1/18/01	0.0 - 18.0	M sunny, mid 80s	--
Type	Stainless	--	HSA	--				
Hammer Wt.	140	--	--	--				
Fall	30-in	--	--	--				

Remarks: Well was replaced on 1/18/01 due to faulty construction. No sampling was conducted for the replacement.

SAMPLE TYPE

S = Split Spoon A = Auger
T = Shelby Tube W = Wash
R = Air Rotary C = Core
D = Denison P = Piston
N = No Sample

WELL INFORMATION

Type	Diam.	Top Depth (Ft.)	Bottom Depth (Ft.)
Sch 40 PVC Casing	2-in	0	8
Sch 40 PVC 10-Slot Screen	2-in	8	18

Depth (Ft.)	Sample Type & No.	Sample Rec. (Ft.,%)	SPT	Lab ID	PID (ppm) ps/bg	Visual Description	Well Installation Detail	Elevation (Ft. MSL)
1 / 2.0	S-1	1.5 / 75%	21 / 45 / 39 / 29		1.6 / 1.2	F/M SAND, some gravel & cobbles; brown; v dense; dry (FILL)	2.0	106.90
3 / 4.0	S-2	1.9 / 95%	30 / 25 / 20 / 18		0 / 0	F/C SAND, some coral frag, trace shell frag & silt; brown; dense; damp (NATIVE)	4.0	104.90
5 / 6.0	S-3	1.6 / 80%	27 / 17 / 15 / 10		0 / 0	F SAND, trace coral frag & silt; tan; dense; damp (stratified)	6.0	102.90
7 / 8.0	S-4	2.0 / 100%	10 / 12 / 12 / 10		5.9 / 0	trace clay stringers; m dense; moist	8.0	100.90
9 / 10.0	S-5	2.0 / 100%	8 / 7 / 5 / 11		0 / 0	some small shell frag, trace silt; gray; m dense; wet at 9.0-ft		
			3			Match to Sheet 2		

DRILLING CO.:	Geoworks, Inc.	BAKER REP.:	Mark DeJohn
DRILLER:	Daniel Rolon	BORING NO.:	7GW12 SHEET 1 OF 2

Baker

Baker Environmental

TEST BORING AND WELL CONSTRUCTION RECORD

PROJECT: SMWU 3 - Well Replacement

CTO NO.: CTO-099 BORING NO.: 7GW12

SAMPLE TYPE

S = Split Spoon A = Auger
T = Shelby Tube W = Wash
R = Air Rotary C = Core
D = Denison P = Piston N = No Sample

DEFINITIONS

SPT = Standard Penetration Test (ASTM D1586)
PID = Photo Ionization Detector Measurement
MSL = Mean Sea Level
ps/bg = point source/background

Depth (Ft.)		Sample Type & No.	Sample Rec. (Ft.,%)	SPT	Lab ID	PID (ppm) ps/bg	Visual Description	Well Installation Detail				Elevation (Ft. MSL)
11			1.0	4		0	Continued from Sheet 1					
		S-6	50%	9		0						
12	12.0			11								
				5								
13		S-7	1.4	11		0	trace shell frag & silt; gray;					
			70%	5		0	m dense; wet					
14	14.0			6								
15		A-N	--	--		--						
16	16.0											
17		A-N	--	--		--						
18	18.0						18.0				18.0	90.90
							BOH at 18.0-ft bgs					
19												
20												
21												
22												
23												
24												
25												
26												
27												
28												
29												
30												

DRILLING CO.: Geoworks, Inc. BAKER REP.: Mark DeJohn

DRILLER: Daniel Rolon BORING NO.: 7GW12 SHEET 2 OF 2

Baker

Baker Environmental

TEST BORING AND WELL CONSTRUCTION RECORD

PROJECT:	SMWU 3 - Well Replacement		
PROJ. NO.:	CTO-099	BORING NO.:	7GW13
COORDINATES:	EAST: 787122.60	NORTH:	141151.65
ELEVATION:	SURFACE: 112.63	TOP OF PVC CASING:	114.94

Rig: Mobile B-61								
	Split Spoon	**Casing**	**Augers**	**Core Barrel**	**Date**	**Progress (Ft.)**	**Weather**	**Depth to Water (Ft.)**
Size (ID)	1-3/8-in	--	4-1/4-in	--	12/14/00	0.0 - 18.0	M sunny, low 80s	11.0
Length	2-ft	--	5-ft	--				
Type	Stainless	--	HSA	--				
Hammer Wt.	140	--	--	--				
Fall	30-in	--	--	--				

Remarks:

SAMPLE TYPE

S = Split Spoon A = Auger
T = Shelby Tube W = Wash
R = Air Rotary C = Core
D = Denison P = Piston
N = No Sample

WELL INFORMATION

Type	Diam.	Top Depth (Ft.)	Bottom Depth (Ft.)
Sch 40 PVC Casing	2-in	0	8
Sch 40 PVC 10-Slot Screen	2-in	8	18

Depth (Ft.)		Sample Type & No.	Sample Rec. (Ft.,%)	SPT	Lab ID	PID (ppm) ps/bg	Visual Description	Well Installation Detail		Elevation (Ft. MSL)
1		S-1	1.0 50%	3 3 5 7		0 0	SILT, some f gravel, trace shell frag & roots; gray; loose; dry (NATIVE)			
2	2.0						2.0			110.63
3		S-2	1.1 55%	6 6 4 5		0 0	F SAND, little coral frag, trace c sand (shell frag) & silt; tan; loose; damp			
4	4.0								4.0	108.63
5		S-3	1.3 65%	5 7 6 5		0 0				
6	6.0						6.0		6.0	106.63
7		S-4	1.0 50%	5 5 5 5		0 0	SILT, trace f/m sand (shell frag); tan; m dense; damp			
8	8.0						8.0		8.0	104.63
9		S-5	1.0 50%	3 9 13 17		0 0	F/C SAND, little coral & shell frag; tan; m dense; damp			
10	10.0									
				6			Match to Sheet 2			

DRILLING CO.:	Geoworks, Inc.	BAKER REP.:	Mark DeJohn
DRILLER:	Daniel Rolon	BORING NO.:	7GW13 SHEET 1 OF 2

Baker

Baker Environmental

TEST BORING AND WELL CONSTRUCTION RECORD

PROJECT: SMWU 3 - Well Replacement

CTO NO.: CTO-099 BORING NO.: 7GW13

SAMPLE TYPE

S = Split Spoon A = Auger
T = Shelby Tube W = Wash
R = Air Rotary C = Core
D = Denison P = Piston N = No Sample

DEFINITIONS

SPT = Standard Penetration Test (ASTM D1586)
PID = Photo Ionization Detector Measurement
MSL = Mean Sea Level
ps/bg = point source/background

Depth (Ft.)		Sample Type & No.	Sample Rec. (Ft.,%)	SPT	Lab ID	PID (ppm) ps/bg	Visual Description	Well Installation Detail	Elevation (Ft. MSL)
11			1.0	7		0	Continued from Sheet 1		
		S-6	50%	9		0	F/C SAND, little coral & shell		
12	12.0			5			frag; tan; m dense; wet at 11-ft		
				5					
13		S-7	1.4	4		0			
			70%	2		0	13.4		99.23
14	14.0			1			wet		
				1					
15		S-8	1.4	1		0	SILT, some clay, trace c sand;		
			70%	1		0	gray; moist; soft		
16	16.0			1					
17		A-N	--	--		--			
18	18.0						18.0	18.0	94.63
							BOH at 18.0-ft bgs		
19									
20									
21									
22									
23									
24									
25									
26									
27									
28									
29									
30									

DRILLING CO.: Geoworks, Inc. BAKER REP.: Mark DeJohn

DRILLER: Daniel Rolon BORING NO.: 7GW13 SHEET 2 OF 2

Baker

Baker Environmental

TEST BORING AND WELL CONSTRUCTION RECORD

PROJECT:	SMWU 3 - Well Replacement		
PROJ. NO.:	CTO-099	BORING NO.:	7GW14
COORDINATES:	EAST: 785764.52	NORTH:	140038.57
ELEVATION:	SURFACE: 111.60	TOP OF PVC CASING:	113.73

Rig: Mobile B-61	**Split Spoon**	**Casing**	**Augers**	**Core Barrel**	**Date**	**Progress (Ft.)**	**Weather**	**Depth to Water (Ft.)**
Size (ID)	1-3/8-in	--	4-1/4-in	--	12/16/00	0.0 - 25.0	Var clouds, low 80s	13.5
Length	2-ft	--	5-ft	--				
Type	Stainless	--	HSA	--				
Hammer Wt.	140	--	--	--				
Fall	30-in	--	--	--				

Remarks:

SAMPLE TYPE

S = Split Spoon A = Auger
T = Shelby Tube W = Wash
R = Air Rotary C = Core
D = Denison P = Piston
N = No Sample

WELL INFORMATION

Type	Diam.	Top Depth (Ft.)	Bottom Depth (Ft.)
Sch 40 PVC Casing	2-in	0	12
Sch 40 PVC 10-Slot Screen	2-in	12	22

Depth (Ft.)		Sample Type & No.	Sample Rec. (Ft.,%)	SPT	Lab ID	PID (ppm) ps/bg	Visual Description		Well Installation Detail		Elevation (Ft. MSL)
1		S-1	1.0 50%	2 4 22 24		0 0	ROCK FRAG, some silt, trace f/c sand; gray; m dense; dry				
2	2.0										
3		S-2	1.2 60%	22 16 13 11		0 0	as above, but finer rocks; buff (FILL)				
4	4.0									4.0	107.60
5		S-3	1.3 65%	11 11 5 4		0 0	F SAND, little silt & f gravel; trace m/c sand; olive drab; m dense; damp	5.7			105.90
6	6.0							6.0			105.60
7		S-4	1.0 50%	3 4 5 4		0 0	SILT, trace clay; olive drab & gray laminae; stiff; damp (NATIVE)				
8	8.0							8.0			103.60
9		S-5	0.6 30%	2 2 4 3		0 0	F SAND (as shell frag), trace silt; dk brown, then gray; loose; damp				
10	10.0									10.0	101.60
				4			Match to Sheet 2				

DRILLING CO.:	Geoworks, Inc.	BAKER REP.:	Mark DeJohn
DRILLER:	Daniel Rolon	BORING NO.:	7GW14 SHEET 1 OF 2

Baker

Baker Environmental

TEST BORING AND WELL CONSTRUCTION RECORD

PROJECT: SMWU 3 - Well Replacement

CTO NO.: CTO-099 BORING NO.: 7GW14

SAMPLE TYPE

S = Split Spoon A = Auger
T = Shelby Tube W = Wash
R = Air Rotary C = Core
D = Denison P = Piston N = No Sample

DEFINITIONS

SPT = Standard Penetration Test (ASTM D1586)
PID = Photo Ionization Detector Measurement
MSL = Mean Sea Level
ps/bg = point source/background

Depth (Ft.)	Sample Type & No.	Sample Rec. (Ft.,%)	SPT	Lab ID	PID (ppm) ps/bg	Visual Description	Well Installation Detail	Elevation (Ft. MSL)
11	S-6	1.0 50%	4 4 4		0/0	Continued from Sheet 1 F SAND (as shell frag), trace silt; buff; loose; damp		
12 12.0							12.0	99.60
13	S-7	1.4 70%	4 5 7 8		0/0	wet at 13.5-ft		
14 14.0								
15	S-8	1.4 70%	6 7 4 5		0/0	Same as 8 - 10-ft, but little black c gravel at 15.3 - 16.0-ft		
16 16.0								
17	S-9	1.4 70%	2 2 1 2		0/0			
18 18.0								
19	A-N	--	--		--			
20								
21								
22							22.0	89.60
23								
24								
25 25.0						25.0	25.0	86.60
26						BOH at 25.0-ft bgs		
27								
28								
29								
30								

DRILLING CO.: Geoworks, Inc. BAKER REP.: Mark DeJohn

DRILLER: Daniel Rolon BORING NO.: 7GW14 SHEET 2 OF 2

Baker

Baker Environmental

TEST BORING AND WELL CONSTRUCTION RECORD

PROJECT:	SMWU 3 - Well Replacement		
PROJ. NO.:	CTO-099	BORING NO.:	7GW15
COORDINATES:	EAST: 785677.29	NORTH:	142168.40
ELEVATION:	SURFACE: 107.05	TOP OF PVC CASING:	108.90

Rig: Mobile B-61								
	Split Spoon	**Casing**	**Augers**	**Core Barrel**	**Date**	**Progress (Ft.)**	**Weather**	**Depth to Water (Ft.)**
Size (ID)	1-3/8-in	--	4-1/4-in	--	12/18/00	0.0 - 14.0	Var clouds, mid 70s	4.5
Length	2-ft	--	5-ft	--				
Type	Stainless	--	HSA	--				
Hammer Wt.	140	--	--	--				
Fall	30-in	--	--	--				

Remarks: (1) - PID not working due to wet conditions

SAMPLE TYPE

S = Split Spoon A = Auger
T = Shelby Tube W = Wash
R = Air Rotary C = Core
D = Denison P = Piston
N = No Sample

WELL INFORMATION

Type	Diam.	Top Depth (Ft.)	Bottom Depth (Ft.)
Sch 40 PVC Casing	2-in	0	4
Sch 40 PVC 10-Slot Screen	2-in	4	14

Depth (Ft.)		Sample Type & No.	Sample Rec. (Ft.,%)	SPT	Lab ID	PID (ppm) ps/bg	Visual Description	Well Installation Detail		Elevation (Ft. MSL)
1		S-1	1.1 55%	4 6 9 10		(1)	CLAY, some f gravel, trace c sand; brown; stiff; moist (FILL)			
2	2.0							2.0	2.0	105.05
3		S-2	1.2 60%	10 13 4 3		(1)	F SAND, trace coral frag & silt; gray; m dense; damp (NATIVE)			
4	4.0								4.0	103.05
5		S-3	1.1 55%	2 2 2 2		(1)	little shell & coral frag& silt; gray; loose; wet at 4.5-ft (silty layer)			
6	6.0									
7		S-4	1.5 75%	1 1 2 1		(1)	F/M SAND, trace silt; gray; loose; wet			
8	8.0							7.8		99.25
9		S-5	1.3 65%	1 1 1 1		(1)	SILT, little clay; gray; soft; moist sulfur odor			
10	10.0									

Match to Sheet 2

DRILLING CO.:	Geoworks, Inc.	BAKER REP.:	Mark DeJohn
DRILLER:	Daniel Rolon	BORING NO.:	7GW15

Baker

Baker Environmental

TEST BORING AND WELL CONSTRUCTION RECORD

PROJECT: SMWU 3 - Well Replacement

CTO NO.: CTO-099 BORING NO.: 7GW15

SAMPLE TYPE

S = Split Spoon A = Auger
T = Shelby Tube W = Wash
R = Air Rotary C = Core
D = Denison P = Piston N = No Sample

DEFINITIONS

SPT = Standard Penetration Test (ASTM D1586)
PID = Photo Ionization Detector Measurement
MSL = Mean Sea Level
ps/bg = point source/background

Depth (Ft.)		Sample Type & No.	Sample Rec. (Ft.,%)	SPT	Lab ID	PID (ppm) ps/bg	Visual Description	Well Installation Detail				Elevation (Ft. MSL)
11							Continued from Sheet 1					
12		A-N	--	--		--						
13												
14	14.0						14.0				14.0	93.05
							BOH at 14.0-ft bgs					
15												
16												
17												
18												
19												
20												
21												
22												
23												
24												
25												
26												
27												
28												
29												
30												

DRILLING CO.: Geoworks, Inc. BAKER REP.: Mark DeJohn

DRILLER: Daniel Rolon BORING NO.: 7GW15 SHEET 2 OF 2

Baker

Baker Environmental

TEST BORING AND WELL CONSTRUCTION RECORD

PROJECT:	SMWU 3 - Well Replacement		
PROJ. NO.:	CTO-099	BORING NO.:	7GW16
COORDINATES:	EAST: 785084.99	NORTH:	141568.27
ELEVATION:	SURFACE: 102.45	TOP OF PVC CASING:	105.11

Rig: Mobile B-61	**Split Spoon**	**Casing**	**Augers**	**Core Barrel**	**Date**	**Progress (Ft.)**	**Weather**	**Depth to Water (Ft.)**
Size (ID)	1-3/8-in	--	4-1/4-in	--	12/18/00	0.0 - 14.0	Var clouds, mid 70s	4.0
Length	2-ft	--	5-ft	--				
Type	Stainless	--	HSA	--				
Hammer Wt.	140	--	--	--				
Fall	30-in	--	--	--				

Remarks:

SAMPLE TYPE

S = Split Spoon A = Auger
T = Shelby Tube W = Wash
R = Air Rotary C = Core
D = Denison P = Piston
N = No Sample

WELL INFORMATION

Type	Diam.	Top Depth (Ft.)	Bottom Depth (Ft.)
Sch 40 PVC Casing	2-in	0	4
Sch 40 PVC 10-Slot Screen	2-in	4	14

Depth (Ft.)		Sample Type & No.	Sample Rec. (Ft.,%)	SPT	Lab ID	PID (ppm) ps/bg	Visual Description	Well Installation Detail		Elevation (Ft. MSL)
1		S-1	0.4 20%	1 2 2 1		0 0	F/C SAND, some clay, little f gravel; dk brown; loose; moist (FILL)		2.0	100.45
2	2.0									
3		S-2	1.3 65%	5 3 2 2		0 0	some f gravel, little clay; black; loose; moist (FILL)			
4	4.0						4.0		4.0	98.45
5		S-3	0.9 45%	1 1 1 1		0 0	F SAND, some silt, little shell & coral frag; gray; v loose; wet at 4.0-ft (NATIVE)			
6	6.0									
7		S-4	0.8 40%	1 3 1 1		0 0	F SAND & SILT, little coral frag; dk gray; loose; wet			
8	8.0									
9		S-5	0.2 10%	1 1 1 1		0 0	F/M SAND (shell frag), trace silt;; v loose; wet (diesel odor in soil cuttings)			
10	10.0									

Match to Sheet 2

DRILLING CO.:	Geoworks, Inc.	BAKER REP.:	Mark DeJohn
DRILLER:	Daniel Rolon	BORING NO.:	7GW16

Baker

Baker Environmental

TEST BORING AND WELL CONSTRUCTION RECORD

PROJECT: SMWU 3 - Well Replacement

CTO NO.: CTO-099 BORING NO.: 7GW16

SAMPLE TYPE

S = Split Spoon A = Auger
T = Shelby Tube W = Wash
R = Air Rotary C = Core
D = Denison P = Piston N = No Sample

DEFINITIONS

SPT = Standard Penetration Test (ASTM D1586)
PID = Photo Ionization Detector Measurement
MSL = Mean Sea Level
ps/bg = point source/background

Depth (Ft.)		Sample Type & No.	Sample Rec. (Ft.,%)	SPT	Lab ID	PID (ppm) ps/bg	Visual Description	Well Installation Detail				Elevation (Ft. MSL)
11							Continued from Sheet 1					
12		A-N	--	--		--						
13												
14	14.0						14.0				14.0	88.45
							BOH at 14.0-ft bgs					
15												
16												
17												
18												
19												
20												
21												
22												
23												
24												
25												
26												
27												
28												
29												
30												

DRILLING CO.: Geoworks, Inc. BAKER REP.: Mark DeJohn

DRILLER: Daniel Rolon BORING NO.: 7GW16 SHEET 2 OF 2

Baker

Baker Environmental

TEST BORING AND WELL CONSTRUCTION RECORD

PROJECT:	SMWU 3 - Well Replacement		
PROJ. NO.:	CTO-099	BORING NO.:	7GW17
COORDINATES:	EAST: 784925.02	NORTH:	139767.58
ELEVATION:	SURFACE: 110.55	TOP OF PVC CASING:	112.39

Rig: Mobile B-61

	Split Spoon	Casing	Augers	Core Barrel	Date	Progress (Ft.)	Weather	Depth to Water (Ft.)
Size (ID)	1-3/8-in	--	4-1/4-in	--	12/18/00	0.0 - 14.0	M Sunny, mid 80s	10.0
Length	2-ft	--	5-ft	--	12/19/00	14.0 - 35.0	M Sunny, mid 80s	
Type	Stainless	--	HSA	--				
Hammer Wt.	140	--	--	--				
Fall	30-in	--	--	--				

Remarks:

SAMPLE TYPE

S = Split Spoon A = Auger
T = Shelby Tube W = Wash
R = Air Rotary H = Air Hammer
D = Denison P = Piston
N = No Sample

WELL INFORMATION

Type	Diam.	Top Depth (Ft.)	Bottom Depth (Ft.)
Sch 40 PVC Casing	2-in	0	20
Sch 40 PVC 10-Slot Screen	2-in	20	30

Depth (Ft.)		Sample Type & No.	Sample Rec. (Ft.,%)	SPT	Lab ID	PID (ppm) ps/bg	Visual Description	Well Installation Detail	Elevation (Ft. MSL)
1		S-1	0.9	1 15		0	SILT, some f/c rock frag, trace		
			45%	29		0	f sand & clay; brown; dense;		
2	2.0			20			damp (FILL)		
3		S-2	0.5	20 25		0	Weathered ROCK FRAG, some		
			25%	25		0	silt; gray; dense; dry (FILL)		
4	4.0			25					
5		S-3	0.5	43 32		0	SILT, some rock frag, trace f		
			25%	25		0	sand; dk gray; v dense; dry (FILL)		
6	6.0			23					
7		S-4	0.8	13 12		0	Weathered ROCK FRAG,		
			40%	10		0	mottled brown; m dense; damp		
8	8.0			9			(FILL)		
9		S-5	0.5	11 10		0	SILT, some rock frag, little clay;		
			25%	9		0	brown; m dense; damp (FILL)		
10	10.0			8			10.0		100.55
				9			Match to Sheet 2		

DRILLING CO.:	Geoworks, Inc.	BAKER REP.:	Mark DeJohn
DRILLER:	Daniel Rolon	BORING NO.:	7GW17 SHEET 1 OF 3

Baker

Baker Environmental

TEST BORING AND WELL CONSTRUCTION RECORD

PROJECT: SMWU 3 - Well Replacement

CTO NO.: CTO-099 BORING NO.: 7GW17

SAMPLE TYPE

S = Split Spoon A = Auger
T = Shelby Tube W = Wash
R = Air Rotary C = Core
D = Denison P = Piston N = No Sample

DEFINITIONS

SPT = Standard Penetration Test (ASTM D1586)
PID = Photo Ionization Detector Measurement
MSL = Mean Sea Level
ps/bg = point source/background

Depth (Ft.)		Sample Type & No.	Sample Rec. (Ft.,%)	SPT	Lab ID	PID (ppm) ps/bg	Visual Description	Well Installation Detail		Elevation (Ft. MSL)
11		S-6	0.5	11		0	Continued from Sheet 1			
			25%	14		0	SILT & CLAY, trace rock &			
12	12.0			12			shell frag; dk gray; v stiff; wet at			
				6			10-ft (sulfur odor) (NATIVE)			
13		S-7	0.8	9		0				
			40%	11		0	little rock frag & sandy zones;			
14	14.0			35			dk gray; v stiff; wet 14.0			96.55
	14.3	S-8	0.0	50/4"		--	No recovery - rock frag			
15										
		A-N	--	--		--				
16	16.0									
17										
		A-N	--	--		--	Zone of boulders			
18									18.0	92.55
19	19.0									
20									20.0	90.55
		A-N	--	--		--	(Auger refusal at 22-ft, switch to			
21							air hammer)			
22	22.0									
23										
24										
25										
26										
		H-N	--	--		--				
27										
28							28.0			82.55
29							F SAND, some silt; signs of water			
30										
							Match to Sheet 3		30.0	80.55

DRILLING CO.: Geoworks, Inc. BAKER REP.: Mark DeJohn

DRILLER: Daniel Rolon BORING NO.: 7GW17 SHEET 2 OF 3

Baker

Baker Environmental

TEST BORING AND WELL CONSTRUCTION RECORD

PROJECT: SMWU 3 - Well Replacement

CTO NO.: CTO-099 BORING NO.: 7GW17

SAMPLE TYPE

S = Split Spoon A = Auger
T = Shelby Tube W = Wash
R = Air Rotary C = Core
D = Denison P = Piston N = No Sample

DEFINITIONS

SPT = Standard Penetration Test (ASTM D1586)
PID = Photo Ionization Detector Measurement
MSL = Mean Sea Level
BG/PS = Background/Point Source

Depth (Ft.)		Sample Type & No.	Sample Rec. (Ft.,%)	SPT	Lab ID	PID (ppm) ps/bg	Visual Description	Well Installation Detail		Elevation (Ft. MSL)
31							Continued from Sheet 2			
32										
33		H-N	--	--		--	F SAND, some silt; signs of water			
34										
35	35.0						35.0		35.0	75.55
36							BOH at 35.0-ft bgs			
37										
38										
39										
40										
41										
42										
43										
44										
45										
46										
47										
48										
49										
50										

DRILLING CO.: Geoworks, Inc. BAKER REP.: Mark DeJohn

DRILLER: Daniel Rolon BORING NO.: 7GW17 SHEET 3 OF 3

Baker

Baker Environmental, Inc.
A Unit of Michael Baker Corporation

Airport Office Park, Building 3
420 Rouser Road
Coraopolis. Pennsylvania 15108

(412) 269-6000
FAX (412) 269-2002

December 17, 2001

U. S. Environmental Protection Agency - Region II
290 Broadway - 22nd Floor
New York, New York 10007-1866

Attn: Ms. Nicoletta DiForte
Chief, RCRA Caribbean Section

Re: Contract N62470-95-D-6007
Navy CLEAN, District III
Contract Task Order (CTO) 099
U.S. Naval Station Roosevelt Roads, Puerto Rico
RCRA/HSWA Permit No. PR2170027203
Draft RFI Work Plan for SWMU 3

Dear Ms. DiForte:

Baker Environmental, Inc. (Baker), on behalf of the Navy, is providing you with two copies of the Draft RFI Work Plan for SWMU 3. This document is being submitted in accordance with the conference call conducted between Mr. Timothy Gordon of your staff, Mr. Kevin Cloe (LANTDIV) and myself on November 20, 2001. The attached work plan is an addendum to the SWMU 3 portion of the EPA approved RFI Work Plan for Naval Station Roosevelt Roads submitted in September 1995. This work plan was modified to address changes agreed to during the November 20, 2001 conference call. It should be noted that funding has been appropriated for this work, therefore the work can proceed as indicated in the work plan proposed schedule once the work plan is approved.

If you have any questions regarding this submittal, please contact me at (412) 269-2009 or Mr. Kevin Cloe at (757) 322-4736.

Sincerely,

BAKER ENVIRONMENTAL, INC.

Mark E. Kimes, P.E.
Activity Coordinator

MEK/lp
Attachments

cc: Mr. Kevin Cloe, LANTDIV – Code EV23KRC (1 copy)
Mr. Tim Gordon, US EPA Region II (2 copies)
Mr. Carl Soderberg, US EPA Caribbean Office (1 copy)
Ms. Kathy Rogovin, Booz, Allen & Hamilton (1 copy)
Ms. Madeline Rivera, NSRR (4 copies)
Mr. Carmelo Vasquez, PREQB (2 copies)
Mr. John Tomik, P.G, CH2M Hill Virginia Beach (1 copy)
Ms. Bonnie Capito, LANTDIV – Code EV32 (w/out attachment)