FIGURES

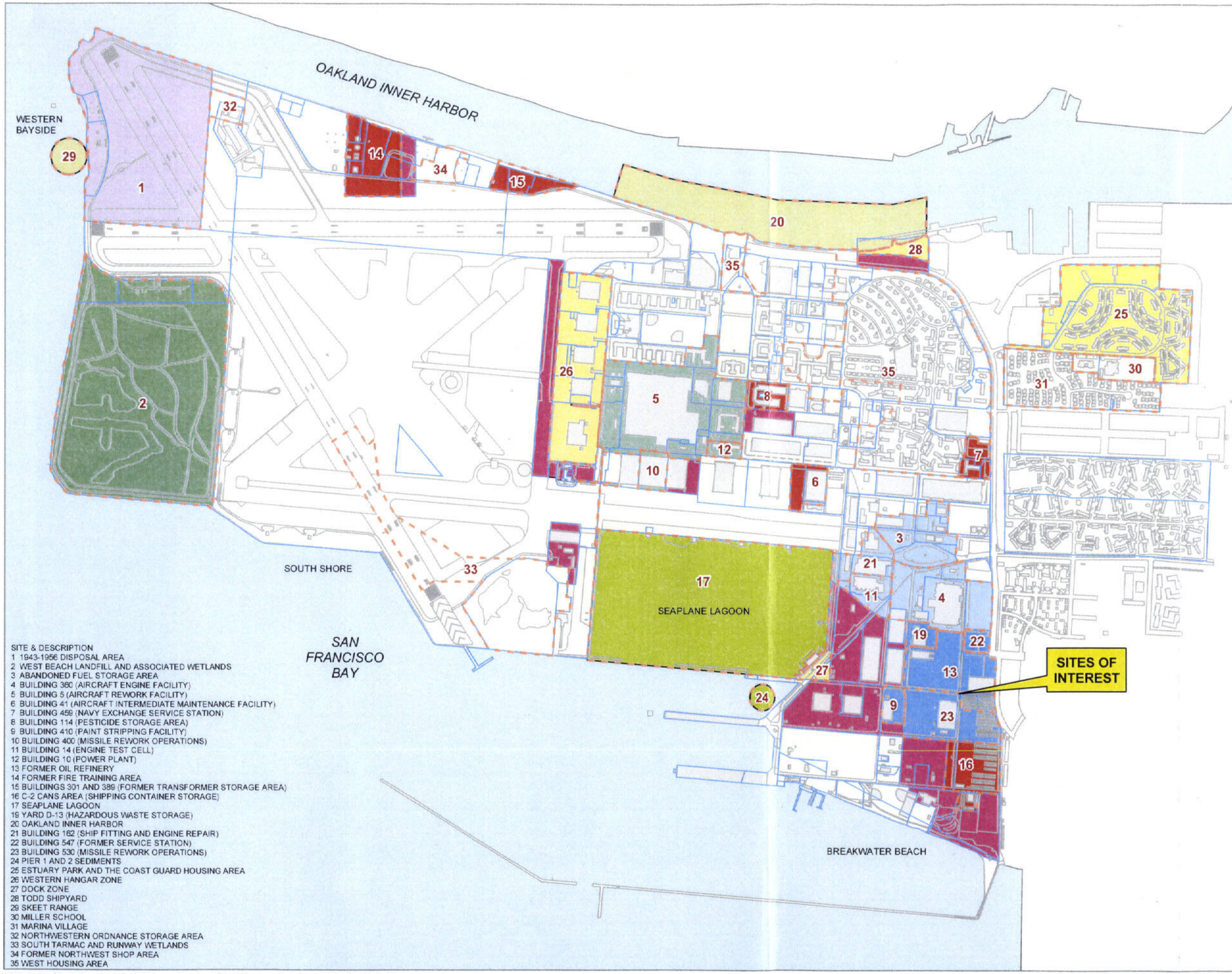

SITE & DESCRIPTION
1 1943-1956 DISPOSAL AREA
2 WEST BEACH LANDFILL AND ASSOCIATED WETLANDS
3 ABANDONED FUEL STORAGE AREA
4 BUILDING 360 (AIRCRAFT ENGINE FACILITY)
5 BUILDING 5 (AIRCRAFT REWORK FACILITY)
6 BUILDING 41 (AIRCRAFT INTERMEDIATE MAINTENANCE FACILITY)
7 BUILDING 459 (NAVY EXCHANGE SERVICE STATION)
8 BUILDING 114 (PESTICIDE STORAGE AREA)
9 BUILDING 410 (PAINT STRIPPING FACILITY)
10 BUILDING 400 (MISSILE REWORK OPERATIONS)
11 BUILDING 14 (ENGINE TEST CELL)
12 BUILDING 10 (POWER PLANT)
13 FORMER OIL REFINERY
14 FORMER FIRE TRAINING AREA
15 BUILDINGS 301 AND 389 (FORMER TRANSFORMER STORAGE AREA)
16 C-2 CANS AREA (SHIPPING CONTAINER STORAGE)
17 SEAPLANE LAGOON
19 YARD D-13 (HAZARDOUS WASTE STORAGE)
20 OAKLAND INNER HARBOR
21 BUILDING 162 (SHIP FITTING AND ENGINE REPAIR)
22 BUILDING 547 (FORMER SERVICE STATION)
23 BUILDING 530 (MISSILE REWORK OPERATIONS)
24 PIER 1 AND 2 SEDIMENTS
25 ESTUARY PARK AND THE COAST GUARD HOUSING AREA
26 WESTERN HANGAR ZONE
27 DOCK ZONE
28 TODD SHIPYARD
29 SKEET RANGE
30 MILLER SCHOOL
31 MARINA VILLAGE
32 NORTHWESTERN ORDNANCE STORAGE AREA
33 SOUTH TARMAC AND RUNWAY WETLANDS
34 FORMER NORTHWEST SHOP AREA
35 WEST HOUSING AREA

CERCLA SITE BOUNDARY
BUFFER ZONE
OPERABLE UNIT 1
OPERABLE UNIT 2A
OPERABLE UNIT 2B
OPERABLE UNIT 2C
OPERABLE UNIT 3
OPERABLE UNIT 4A
OPERABLE UNIT 4B
OPERABLE UNIT 4C
OPERABLE UNIT 5
OPERABLE UNIT 6
BUILDING
LAND COVER
OPEN WATER

Notes:
CERCLA = Comprehensive Environmental Response, Compensation, and Liability Act of 1980

600 0 600 1200 Feet

Tetra Tech EM Inc.

Alameda Point
U.S. Navy Southwest Division, NAVFAC, San Diego

FIGURE I-1
OPERABLE UNITS, CERCLA SITES AND BUFFER ZONES
OU-2A
Environmental Risk Assessment
Remedial Investigation Report

2003-11-14 U:\almda_sa\do028\ou2a\r\appendix_era\mxd\fig_i-01_ou_cercla_buffer.mxd TtEMI-SA K. Johnson

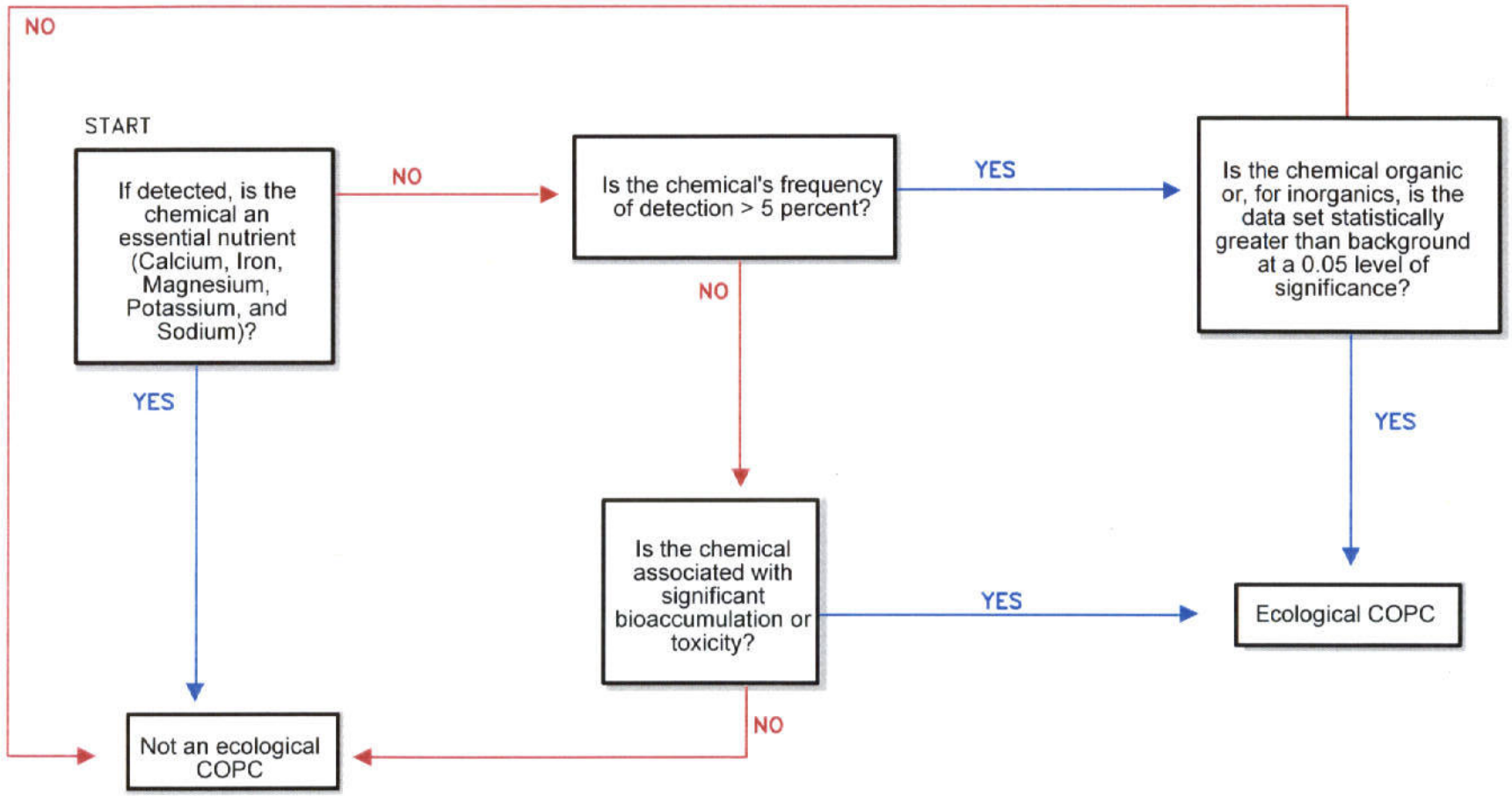

LEGEND

COPC CHEMICAL OF POTENTIAL CONCERN

Tetra Tech EM Inc.

Alameda Point
U.S. Navy Southwest Division, NAVFAC, San Diego

FIGURE I-2
DECISION TREE FOR ECOLOGICAL COPC SELECTION FOR SURFACE SOILS AND RHIZOSPHERE
Ecological Risk Assessment for
Sites 9, 13, 19, 22, and 23

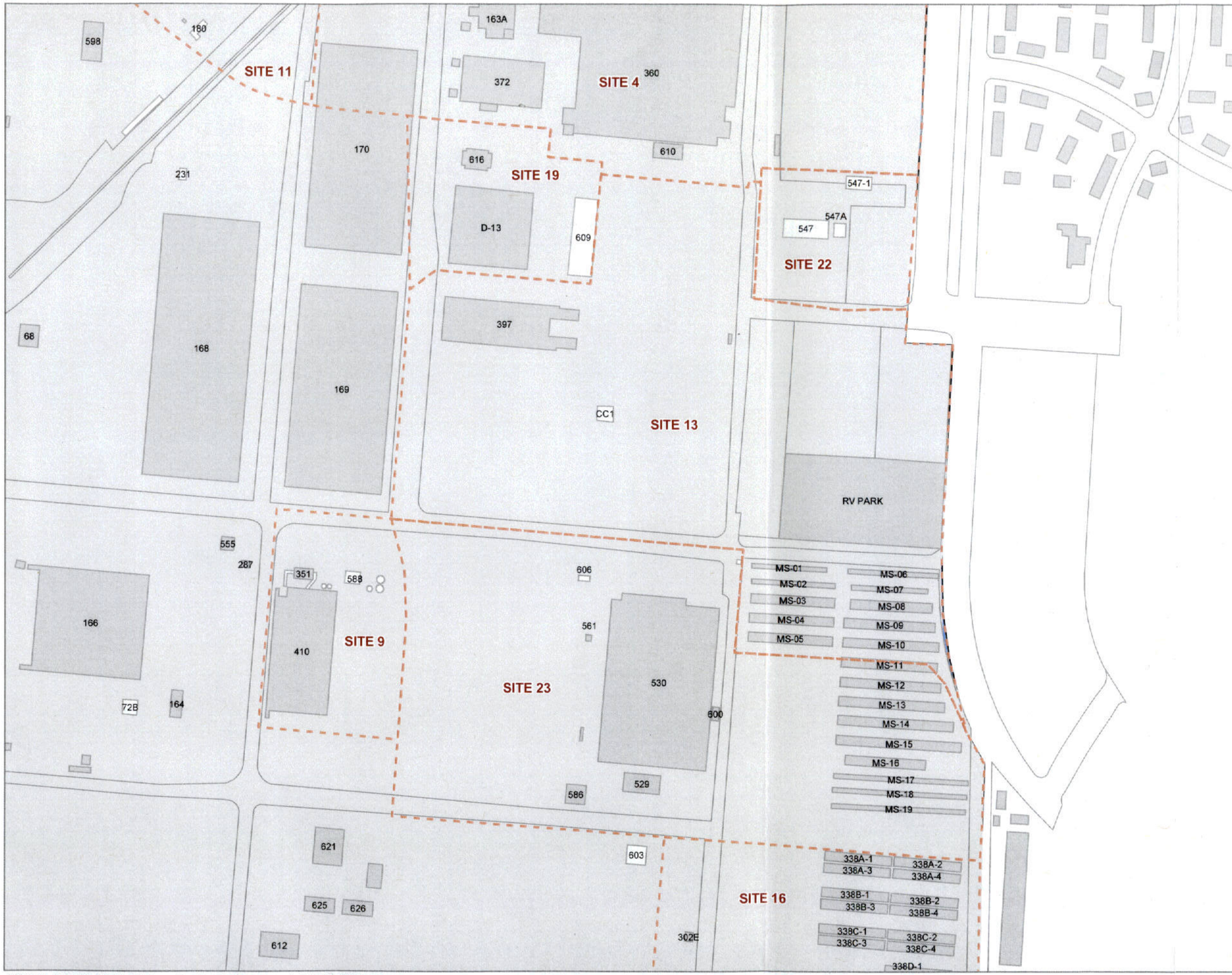

CERCLA SITE BOUNDARY

HABITAT

Intensively Developed

LAND COVER

BUILDING

Present

Removed

Note:
CERCLA = Comprehensive Environmental Response, Compensation, and Liability Act of 1980

N

100 0 100 200 Feet

Tetra Tech EM Inc.

Alameda Point
U.S. Navy Southwest Division, NAVFAC, San Diego

FIGURE I-3
ECOLOGICAL HABITAT MAP OF OU-2A SITES 9, 13, 19, 22 AND 23
OU-2A
Environmental Risk Assessment
Remedial Investigation Report

2003-11-14 U:\almda_sa\do028\ou2a\ri\appendix_era\mxd\fig_i-03_habitat.mxd TtEMI-SA K. Johnson

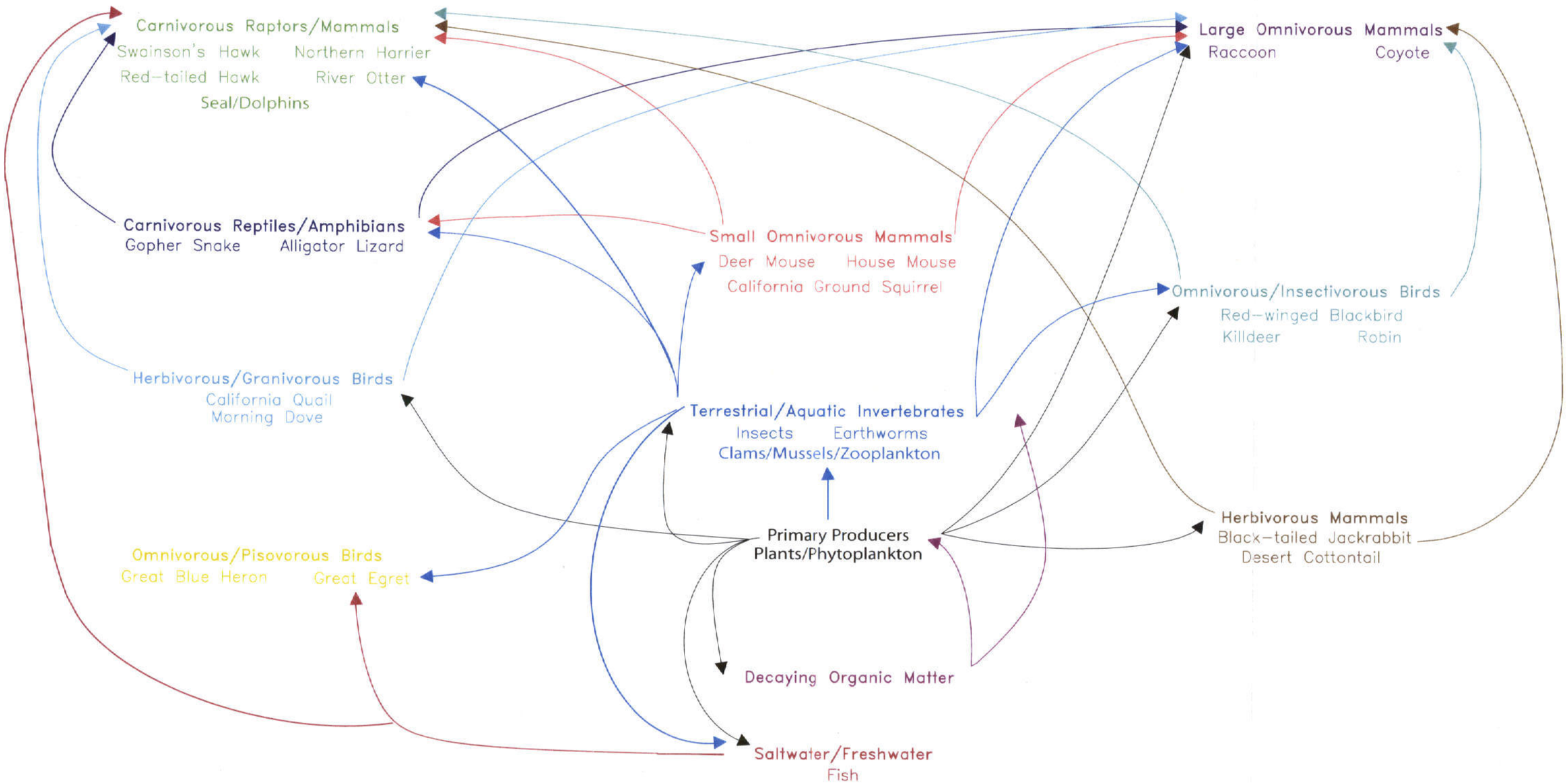

Tetra Tech EM Inc.

Alameda Point
U.S. Navy Southwest Division, NAVFAC, San Diego

FIGURE I-4
TERRESTRIAL FOOD WEB
Ecological Risk Assessment for
Sites 9, 13, 19, 22, and 23

R:\Navy\Alameda\Ver66\ TERR-FOOD.dwg 03/26/2002 marianne.turanek DN

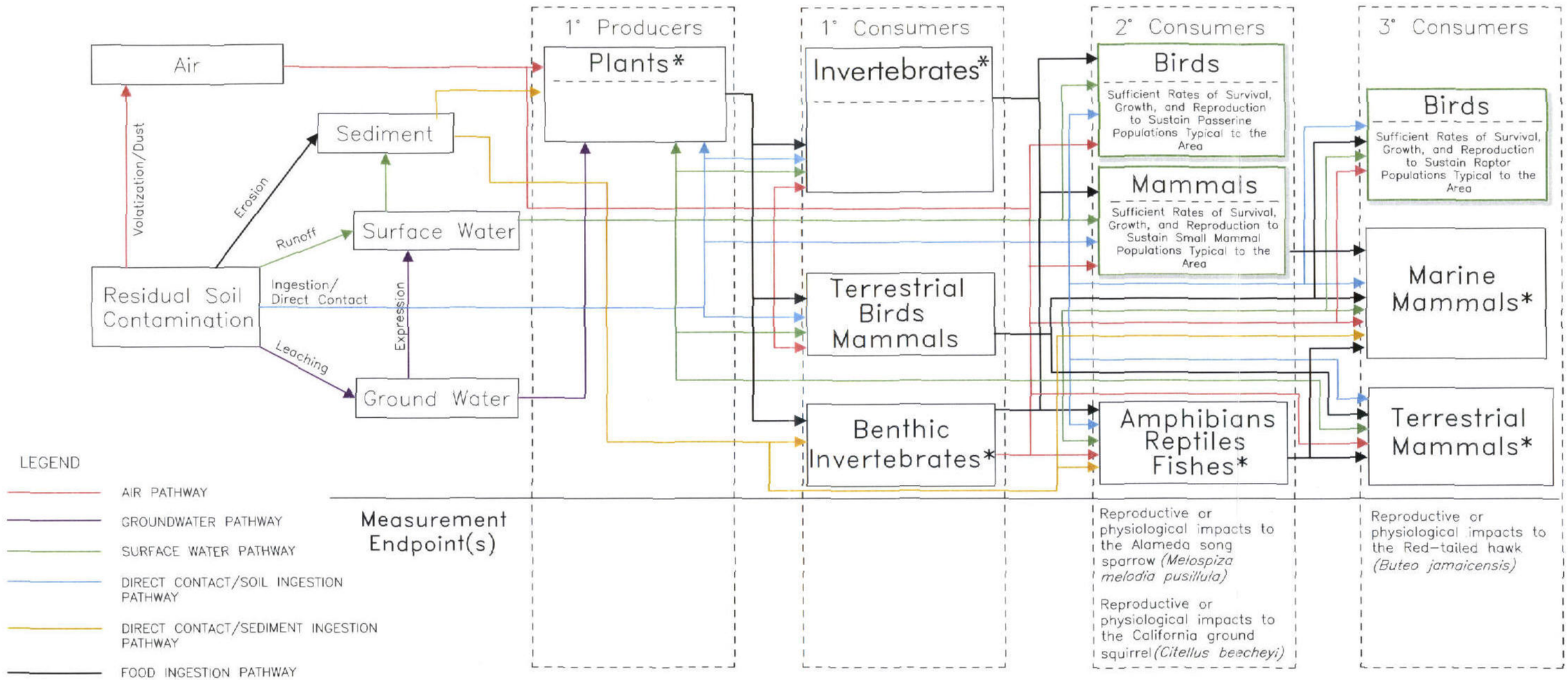

LEGEND

- AIR PATHWAY
- GROUNDWATER PATHWAY
- SURFACE WATER PATHWAY
- DIRECT CONTACT/SOIL INGESTION PATHWAY
- DIRECT CONTACT/SEDIMENT INGESTION PATHWAY
- FOOD INGESTION PATHWAY
- ASSESSMENT ENDPOINTS

1° PRIMARY

2° SECONDARY

3° TERTIARY

* THESE CONSUMERS ARE PRESENT AT ALAMEDA POINT BUT WERE NOT ASSESSED AS AN ENDPOINT

Tetra Tech EM Inc.

Alameda Point
U.S. Navy Southwest Division, NAVFAC, San Diego

FIGURE I-5
GENERIC ECOLOGICAL CONCEPTUAL SITE MODEL
Ecological Risk Assessment for Sites 9, 13, 19, 22, and 23

R:\Navy\Alameda\C10168\ ECO-CONCEP.dwg 04/04/2002 marianne.turonek DN

TABLES

TABLE I-1: SPECIAL STATUS SPECIES – PLANTS, FISH, REPTILES, AND MAMMALS

Ecological Risk Assessment for Sites 9, 13, 19, 22, and 23
Alameda Point, Alameda, California

	Common Name	Scientific Name
Plants[a]	Contra Costa goldfields	*Lasthenia conjugens*
	Santa Cruz tarplant	*Holocarpha macradenia*
	Kellogg's horkelia	*Horkelia cuneata sericea*
	Point Reyes bird's beak	*Cordylanthus maritimus palustris*
	Adobe sanicle	*Sanicula maritima*
Fish[b]	Chinook salmon, winter run	*Oncorhynchus tshawytscha*
	Longfin smelt	*Spirinchus thaleichthys*
	Delta smelt	*Hypomesus transpacificus*
	Coho salmon	*Oncorhynchus kisutch*
Reptile[c]	Alameda whipsnake	*Masticophis lateralis euryxanthus*
Mammals[d]	Salt marsh harvest mouse[4]	*Reithrodontomys raviventris*
	San Francisco dusky-footed woodrat	*Neotoma fuscipes annectens*
	Townsend's western big-eared bat	*Plecotus townsendii townsendii*
	California mastiff bat	*Eumops perotis californicus*
	Northern (Steller) sea lion	*Eumetopias jubatus*
	Saltmarsh wandering shrew	*Sorex vagrens halicoetes*
	Alameda Island mole	*Scapanus latimanus parvus*

Notes:

a Rare plant species listed as potentially occurring at Alameda Point. These plants were not identified during vegetation surveys performed in 1995 and 1997.

b Rare fish species that may occur in the open water areas adjacent to Alameda Point.

c Special status species that may occur at Alameda Point.

d In 1995, a survey for the salt marsh harvest mouse was conducted in the West Beach Landfill Wetland and in the Runway Area Wetland to identify potential receptors for evaluation in ecological risk assessments being conducted by the Navy for the IR program. No individuals were captured during these surveys of the West Beach Landfill Wetland and Runway Area Wetland.

Reference:

U.S. Fish and Wildlife Service. 1993. "Listed and Proposed Endangered and Threatened Species and Candidate Species that may Occur in the Area of the Proposed Closure of Naval Air Station, Alameda, Alameda County, California (1-1-94-SP-192, December 31, 1993)." Enclosure attached to letter from Dale A. Pierce, FWS, to John H. Kennedy, U.S. Department of Navy.

TABLE I-2: SPECIAL STATUS SPECIES – BIRDS

Ecological Risk Assessment for Sites 9, 13, 19, 22, and 23
Alameda Point, Alameda, California

	COMMON NAME	SCIENTIFIC NAME
Birds[a]	California least tern	*Sterna antillarum browni*
	American peregrine falcon	*Falco peregrinus anatum*
	Western snowy plower, coastal population	*Charadrius alexandrinus nivosus*
	Saltmarsh common yellowthroat	*Geothlypis trichas sinuosa*
	Alameda song sparrow	*Melospiza melodia pusillula*
	Double-crested cormorant, rookery sites	*Phalacrocorax auritus*
	California black rail	*Laterallus jamaicensis coturniculus*
	California clapper rail	*Rallus longirostris obsoletus*
	Caspian tern, nesting colonies	*Sterna caspia*
	Forster's tern, nesting colonies	*Sterna forsteri*
	California brown pelican, nesting colony	*Pelecanus occidentalis californicus*
	California horned lark	*Eremophila alpestris actia*
	Loggerhead shrike	*Lanius ludovicianus*
	California gull	*Larus californicus*
	Northern harrier, nesting sites	*Circus cyaneus*
	Merlin	*Falco columbarius*
	Long-billed curlew, breeding	*Numenius americuanus*
	Burrowing owl, burrowing sites	*Athene cunicularia*
	Common loon, breeding	*Gavia imer*
	Fork-tailed storm petrel, rookery	*Ocanodroma furcata*
	American white pelican, nesting colony	*Pelicanus erythrorhynchos*
	Clark's grebe	*Aechmophorus clarkii*
	Western grebe	*Aechmophorus occidentalis*
	Great blue heron, rookery	*Ardea herodias*
	Great egret, rookery	*Casmerodius albus*
	Snowy egret, rookery	*Egreta thula*
	Black-crowned night heron, rookery	*Nycticorax nycticorax*
	Black-shouldered kite, nesting	*Elanus caeruleus*
	Common murre, nesting colony	*Uria aalge*

Notes:

a Special status bird species and associated sensitive habitats (such as breeding, nesting, and rookery sites) that occur or may occur at Alameda Point.

Reference:

U.S. Fish and Wildlife Service. 1993. "Listed and Proposed Endangered and Threatened Species and Candidate Species that May Occur in the Area of the Proposed Closure of Naval Air Station, Alameda, Alameda County, California (1-1-94-SP-192, December 31, 1993)." Enclosure attached to letter from Dale A. Pierce, FWS, to John H. Kennedy, U.S. Department of Navy.

TABLE I-3: TERRESTRIAL HABITAT SUMMARY FOR OU-2A SITES

Ecological Risk Assessment for Sites 9, 13, 19, 22, and 23
Alameda Point, Alameda, California

Habitat Type	Dominant Vegetation	Observed Animal Species	Relative Occurrence
Site 9			
Urban/Ornamental Landscapes	None (paved)	None	NA
Site 13			
Urban/Ornamental Landscapes	None (paved)	None	NA
Site 19			
Urban/Ornamental Landscapes	None (paved)	None	NA
Site 22			
Urban/Ornamental Landscapes	None (paved)	None	NA
Site 23			
Urban/Ornamental Landscapes	None (paved)	None	NA

Note:

NA Not applicable

TABLE I-4: HIGH TOXICITY REFERENCE VALUES FOR THE CALIFORNIA GROUND SQUIRREL (CITELLUS BEECHEYI)

Ecological Risk Assessment for Sites 9, 13, 19, 22, and 23, Alameda Point, Alameda, California

Ecological COPC	Literature-Based High TRV (mg/kg-day)	Source of Study	Study	Endpoint	Body Weight of Study Subject (g)	Allometrically Converted High TRV (mg/kg-day)
Metals						
Antimony	2.67E+01[a]	EPA (2003)	Various	Reproductive and physiological effects in small mammals	189[a]	2.50E+01
Arsenic	4.70E+00	Navy (1998)	Brown and others (1976)	Decrease in water intake, kidney weight/body weight ratio, respiratory effects in Sprague-Dawley rats	110	4.26E+00
Barium	1.98E+01	Sample and others (1996)	Borzelleca and others (1988)	Mortality in female rats	350	1.92E+01
Beryllium	6.60E+00	Sample and others (1996)	Schroeder and Mitchener (1971)	Adverse physiological effects in rats	350	6.42E+00
Cadmium	2.64E+00	Navy (1998)	Schroeder and Mitchener (1971)	Increase in young deaths and runts; failure to breed in mice	31.4	2.22E+00
Chromium	1.31E+01	Sample and others (1996)	Steven and others (1976) as cited in Eisler (1986)	Mortality in rats	350	1.28E+01
Copper	6.32E+02	Navy (1998)	Hebert and others (1993)	Decreased water consumption, body weight, and increased mortality in mice	24.7	5.24E+02
Lead	2.41E+02	Navy (1998)	Wise 1981	Decrease in body weight, liver weight, and kidney weight in mice	18.7	1.96E+02
Mercury	4.00E+00	Navy (1998)	Wobeser and others (1976)	Adverse effects on the nervous system in rats	187.5	3.75E+00
Selenium	1.21E+00	Navy (1998)	Schroeder and Mitchener (1971)	Increase in young deaths and the number of runts in mice	24.6	1.00E+00
Zinc	4.11E+02	Navy (1998)	Shlicker and Cox (1968)	Decreased fetus weight, fetal liver weight, and body weight in Nulliparous rats	175	3.84E+02
Pesticides						
Chlordane	9.20E+00	Sample and others (1996)	Keplinger and others (1986)	Reproductive effects in mice	30	7.72E+00
DDTt[b]	1.60E+01	Navy (1998)	EPA (1995)	Reproductive effects in rats	320	1.55E+01
Heptachlor Epoxide	6.80E+00	Navy (1998)	Narotsky and others (1995)	Decrease in weekly weight gain in rat pups	204	6.40E+00
PCBs[c]						
Total PCBs	1.28E+00	Navy (1998)	Linzey (1987)	Decrease in survival/litter; increase in birth interval, decrease number of young per litter in mice	22.85	1.06E+00

TABLE I-4: HIGH TOXICITY REFERENCE VALUES FOR THE CALIFORNIA GROUND SQUIRREL (CITELLUS BEECHEYI)
Ecological Risk Assessment for Sites 9, 13, 19, 22, and 23, Alameda Point, Alameda, California

Ecological COPC	Literature-Based High TRV (mg/kg-day)	Source of Study	Study	Endpoint	Body Weight of Study Subject (g)	Allometrically Converted High TRV (mg/kg-day)
PAHs						
HMW PAHs[d]	3.28E+01	Navy (1998)	Rigdon and Neal (1969)	Increase in pulmonary adenoma	30.5	2.75E+01
LMW PAHs[e]	1.50E+02	Navy (1998)	Navarro and others (1991)	Decrease in weight gain during gestation period	270.2	1.44E+02
SVOCs						
4-Chloro-3-methylphenol	NV	NA	NA	NA	NA	NA
Bis(2-ethylhexyl)phthalate	1.83E+02	Sample and others (1996)	Lamb and others (1987)	Adverse reproductive effects in mice	30	1.53E+02
Carbazole	NV	NA	NA	NA	NA	NA
Diethylphthalate	4.58E+04	Sample and others (1996)	Lamb and others (1987)	Reproductive effects in mice	30	3.84E+04
Di-n-butylphthalate	1.83E+03	Sample and others (1996)	Lamb and others (1987)	Adverse reproductive effects in mice	30	1.54E+03
n-Nitroso-diphenylamine	NV	NA	NA	NA	NA	NA
Pentachlorophenol	2.40E+00	Sample and others (1996)	Schwetz and others (1978)	Significant reduction in survival and growth in rats	350	2.33E+00
VOCs						
1,2-Dichloroethene	4.52E+02	Sample and others (1996)	Palmer and others (1979)	Adverse physiological effects in mice	30	3.79E+02
1,3-Dichlorobenzene	NV	NA	NA	NA	NA	NA
4-Methyl-2-pentanone	2.50E+02	Sample and others (1996)	Microbiological Associates (1986)	Adverse effect in kidney and liver function in rats	350	2.43E+02
Acetone	5.00E+02	Sample and others (1996)	EPA (1986)	Adverse physiological effects in rats	350	4.86E+02
Benzene	2.64E+02	Sample and others (1996)	Nawrot and Staples (1979)	Decrease in fetal weights, increase maternal mortality, and embryonic resorption	30	2.21E+02
Carbon Disulfide	NV	NA	NA	NA	NA	NA
Ethylbenzene	NV	NA	NA	NA	NA	NA
Methylene Chloride	5.00E+01	Sample and others (1996)	NCA 1982	Adverse effects to the liver in rats	350	4.86E+01
Tetrachloroethene	7.00E+00	Sample and others (1996)	Buben and O'Flaherty (1985)	Hepatoxicity in mice	30	5.87E+00
Toluene	2.60E+02	Sample and others (1996)	Nawrot and Staples (1979)	Adverse effects on reproduction in mice	30	2.18E+02

TABLE I-4: HIGH TOXICITY REFERENCE VALUES FOR THE CALIFORNIA GROUND SQUIRREL (CITELLUS BEECHEYI)

Ecological Risk Assessment for Sites 9, 13, 19, 22, and 23, Alameda Point, Alameda, California

Ecological COPC	Literature-Based High TRV (mg/kg-day)	Source of Study	Study	Endpoint	Body Weight of Study Subject (g)	Allometrically Converted High TRV (mg/kg-day)
VOCs (Continued)						
Trichloroethene	7.00E+00	Sample and others (1996)	Bubin and O'Flaherty (1985)	Hepatoxicity in mice	30	5.87E+00
Xylene	2.60E+00	Sample and others (1996)	Marks and others (1982)	Adverse effects on reproduction in mice	30	2.18E+00

Notes:

a	High TRV and BW is the calculated geometric mean of all LOAELs and BWs presented in EPA (2003).
b	DDTt TRV based on DDT; individual TRVs not developed.
c	PCB TRV based on Aroclor 1254; individual TRVs not developed.
d	HMW PAHs are defined as measured PAHs with a molecular weight greater than 200 a.u. and include: benzo(a)fluorene, fluoranthene, benzo(k)fluoranthene, benzo(b)fluoranthene, benzo(b)fluorene, benzo(g,h,i)perylene, chrysene, benzo(a)anthracene, dibenzo(a,h)anthracene, indeno(1,2,3-cd)pyrene, pyrene, and benzo(a)pyrene. TRV based on benzo(a)pyrene.
e	LMW PAHs are defined as measured PAHs with a molecular weight below 200 a.u., including naphthalene, fluorene, anthracene, phenanthrene, anthracene, and 2-methylnaphthalene. TRV based on naphthalene.
a.u.	Atomic unit
COPC	Chemical of potential concern
DDT	Dichlorodiphenyltrichloroethane
DDTt	Sum of concentrations of 4,4'-dichlorodiphenyldichloroethane, 4,4'-dichlorodiphenyldichloroethene, and 4,4'-dichlorodiphenyltrichloroethane
EPA	U.S. Environmental Protection Agency
g	Gram
HMW	High molecular weight
LMW	Low molecular weight
mg/kg day	Milligram per kilogram per day
NA	Not applicable
Navy	U.S. Department of Navy
NOAEL	No observed adverse effects level
NV	No value available
PAH	Polynuclear aromatic hydrocarbon
PCB	Polychlorinated biphenyl
SVOC	Semivolatile organic chemical
TRV	Toxicity reference value
VOC	Volatile organic chemical

References:

EPA. 2003. Ecological Soil Screening Levels for Antimony, Interim Final. OSWER Directive 9285.7-61. November.

Navy. 1998. "Interim Final Technical Memorandum, Development of Toxicity Reference Values for Conducting Ecological Risk Assessments at Naval Facilities in California." September.

Sample, B.E., D.M. Opresko, and G.W. Suter, II. 1996. "Toxicological Benchmarks for Wildlife: 1996 Revision." ES/ER/TM-86/R3. Oak Ridge National Laboratory. Oak Ridge, Tennessee.

TABLE I-5: LOW TOXICITY REFERENCE VALUES FOR THE CALIFORNIA GROUND SQUIRREL (CITELLUS BEECHEYI)

Ecological Risk Assessment for Sites 9, 13, 19, 22, and 23, Alameda Point, Alameda, California

Ecological COPC	Literature-Based Low TRV (mg/kg-day)	Source of Study	Study	Endpoint	Body Weight of Study Subject (g)	Allometrically Converted Low TRV (mg/kg-day)
Metals						
Antimony	6.00E-02[a]	EPA (2003)	Various	Reproductive and physiological effects in small mammals	160[a]	5.56E-02
Arsenic	3.20E-01	Navy (1998)	Schroeder and others (1968)	Adverse effect on growth rates, survival, glycosuria, proteinuria, blood pressure, tumors, and heart weight and adverse effect on serum glucose in females (rats)	332	3.10E-01
Barium	5.10E+00	Sample and others (1996)	Perry and others (1983)	Growth and hypertension in rats	435	5.02E+00
Beryllium	6.60E-01	Sample and others (1996)	Schroeder and Mitchener (1971)	Adverse physiological effects in rats	350	6.42E-01
Cadmium	6.00E-02	Navy (1998)	Webster (1988)	NOAEL for effects on fetal weight	32.2	5.05E-02
Chromium	3.28E+00	Sample and others (1996)	McKenzie and others (1958)	Physiological effects in rats	350	3.19E+00
Copper	2.67E+00	Navy (1998)	Pocino and others (1991)	Adverse effect on food ingestion rate, body weight, number of cells in the thymus, or mortality in mice	30	2.24E+00
Lead	1.00E+00	HERD 2002	Fowler and others (1980)	Adverse effects on renal systems in rats	208	9.42E-01
Mercury	2.50E-01	Navy (1998)	Wobeser and others (1976)	Adverse effects on the nervous system in rats	187.5	2.34E-01
Selenium	5.00E-02	Navy (1998)	Harr and others (1966)	Hepatic lesions in Wistar rats	24.6	4.14E-02
Zinc	9.61E+00	Navy (1998)	Aughey and others (1977)	Hypertrophy and vacuolation of pancreatic islets cells and fascicolata cells in the adrenal cortex	25.5	7.98E+00
Pesticides						
Chlordane	4.60E+00	Sample and others (1996)	Keplinger and others (1986)	Reproductive effects in mice	30	3.86E+00
DDTt[b]	8.00E-01	Navy (1998)	EPA (1995)	Reproductive effects in rats	320	7.73E-01
Heptachlor Epoxide	1.30E-01	Navy (1998)	Narotsky and others (1995)	Decrease in weekly weight gain in rat pups	204	1.22E-01
PCBs[c]						
Total PCBs	3.60E-01	Navy (1998)	Simmons and McKee (1992)	NOAEL for liver weight, drug induced sleep time, or enzyme activity in mice	20.6	2.95E-01

TABLE I-5: LOW TOXICITY REFERENCE VALUES FOR THE CALIFORNIA GROUND SQUIRREL (CITELLUS BEECHEYI)
Ecological Risk Assessment for Sites 9, 13, 19, 22, and 23, Alameda Point, Alameda, California

Ecological COPC	Literature-Based Low TRV (mg/kg-day)	Source of Study	Study	Endpoint	Body Weight of Study Subject (g)	Allometrically Converted Low TRV (mg/kg-day)
PAHs						
HMW PAHs[d]	1.31E+00	Navy (1998)	Neal and Rigdon (1967)	Occurrences of gastric neoplasts and change of life span in mice	30.5	1.10E+00
LMW PAHs[e]	5.00E+01	Navy (1998)	Navarro and others (1991)	Increase in maternal toxicity	276.5	4.79E+01
SVOCs						
4-Chloro-3-methylphenol	NV	NA	NA	NA	NA	NA
Bis(2-ethylhexyl)phthalate	1.83E+01	Sample and others (1996)	Lamb and others (1987)	Adverse reproductive effects in mice	30	1.53E+01
Carbazole	NV	NA	NA	NA	NA	NA
Diethylphthalate	4.58E+03	Sample and others (1996)	Lamb and others (1987)	Reproductive effects in mice	30	3.84E+03
Di-n-butylphthalate	5.50E+02	Sample and others (1996)	Lamb and others (1987)	Adverse reproductive effects in mice	30	4.61E+02
n-Nitroso-diphenylamine	NV	NA	NA	NA	NA	NA
Pentachlorophenol	2.40E-01	Sample and others (1996)	Schwetz and others (1978)	Significant reduction in survival and growth in rats	350	2.33E-01
VOCs						
1,2-Dichloroethene	4.52E+01	Sample and others (1996)	Palmer and others (1979)	Adverse physiological effects in mice	30	3.79E+01
1,3-Dichlorobenzene	NV	NA	NA	NA	NA	NA
4-Methyl-2-pentanone	2.50E+01	Sample and others (1996)	Microbiological Associates (1986)	Adverse effect in kidney and liver function in rats	350	2.43E+01
Acetone	1.00E+02	Sample and others (1996)	EPA (1986)	Adverse physiological effects in rats	350	9.72E+01
Benzene	2.64E+01	Sample and others (1996)	Nawrot and Staples (1979)	Decrease in fetal weights, increase maternal mortality, and embryonic resorption	30	2.21E+01
Carbon Disulfide	NV	NA	NA	NA	NA	NA
Ethylbenzene	NV	NA	NA	NA	NA	NA
Methylene Chloride	5.85E+00	Sample and others (1996)	NCA 1982	Adverse effects to the liver in rats	350	5.69E+00
Tetrachloroethene	1.40E+00	Sample and others (1996)	Buben and O'Flaherty (1985)	Hepatoxicity in mice	30	1.17E+00
Toluene	2.60E+01	Sample and others (1996)	Nawrot and Staples (1979)	Adverse effects on reproduction in mice	30	2.18E+01

TABLE I-5: LOW TOXICITY REFERENCE VALUES FOR THE CALIFORNIA GROUND SQUIRREL (CITELLUS BEECHEYI)

Ecological Risk Assessment for Sites 9, 13, 19, 22, and 23, Alameda Point, Alameda, California

Ecological COPC	Literature-Based Low TRV (mg/kg-day)	Source of Study	Study	Endpoint	Body Weight of Study Subject (g)	Allometrically Converted Low TRV (mg/kg-day)
VOCs (Continued)						
Trichloroethene	7.00E-01	Sample and others (1996)	Bubin and O'Flaherty (1985)	Hepatoxicity in mice	30	5.87E-01
Xylene	2.10E+00	Sample and others (1996)	Marks and others (1982)	Adverse effects on reproduction in mice	30	1.76E+00

Notes:

a	Low TRV and BW is the calculated geometric mean of all LOAELs and BWs presented in EPA (2003).
b	DDTt TRV based on 4,4'-DDT; individual TRVs not developed.
c	PCB TRV based on Aroclor 1254; individual TRVs not developed.
d	HMW PAHs are defined as measured PAHs with a molecular weight greater than 200 a.u. and include: benzo(a)fluorene, fluoranthene, benzo(k)fluoranthene, benzo(b)fluoranthene, benzo(b)fluorene, benzo(g,h,i)perylene, chrysene, benzo(a)anthracene, dibenzo(a,h)anthracene, indeno(1,2,3-cd)pyrene, pyrene, and benzo(a)pyrene. TRV based on benzo(a)pyrene.
e	LMW PAHs are defined as measured PAHs with a molecular weight below 200 a.u., including naphthalene, fluorene, anthracene, phenanthrene, anthracene, and 2-methylnaphthalene. TRV based on naphthalene.
a.u.	Atomic unit
COPC	Chemical of potential concern
DDT	Dichlorodiphenyltrichloroethane
DDTt	Sum of concentrations of 4,4'-dichlorodiphenyldichloroethane, 4,4'-dichlorodiphenyldichloroethene, and 4,4'-dichlorodiphenyltrichloroethane
EPA	U.S. Environmental Protection Agency
g	Gram
HERD	California Department of Toxic Substances Control Human and Ecological Risk Division
HMW	High molecular weight
LMW	Low molecular weight
mg/kg-day	Milligram per kilogram per day
NA	Not applicable
Navy	U.S. Department of Navy
NOAEL	No observed adverse effects level
NV	No value available
PAH	Polynuclear aromatic hydrocarbon
PCB	Polychlorinated biphenyl
SVOC	Semivolatile organic chemical
TRV	Toxicity reference value
VOC	Volatile organic chemical

References:

EPA. 2003. Ecological Soil Screening Levels for Antimony, Interim Final. OSWER Directive 9285.7-61. November.

Navy. 1998. "Interim Final Technical Memorandum, Development of Toxicity Reference Values for Conducting Ecological Risk Assessments at Naval Facilities in California." September.

Sample, B.E., D.M. Opresko, and G.W. Suter, II. 1996. "Toxicological Benchmarks for Wildlife: 1996 Revision." ES/ER/TM-86/R3. Oak Ridge National Laboratory. Oak Ridge, Tennessee.

HERD. 2002. "Revised U.S. Environmental Protection Agency Region 9 Biological Technical Assistance Group Mammalian Toxicity Reference Value for Lead: Justification and Rationale." HERD Ecological Risk Assessment Note, No. 5. November 21.

TABLE I-6: HIGH TOXICITY REFERENCE VALUES FOR THE ALAMEDA SONG SPARROW (MELOSPIZA MELODIA PUSILLULA)

Ecological Risk Assessment for Sites 9, 13, 19, 22, and 23, Alameda Point,

Ecological COPC	Literature-Based High TRV (mg/kg-day)	Source of Study	Study	Endpoint	Body Weight of Study Subject (g)	Allometrically Converted High TRV (mg/kg-day)
Metals						
Antimony[a]	2.20E+01	Navy (1998)	Stanley, Jr., and others (1994)	Adverse effect on liver weight, glycogen depletion, number of days between pairing and first egg, whole-egg weight, duckling body and liver weights posthatching, duckling growth rate, and duckling production in mallards	1,172	9.74E+00
Arsenic	2.20E+01	Navy (1998)	Stanley, Jr., and others (1994)	Adverse effect on liver weight, glycogen depletion, number of days between pairing and first egg, whole-egg weight, duckling body and liver weights posthatching, duckling growth rate, and duckling production in mallards	1,172	9.74E+00
Barium	4.17E+01	Sample and others (1996)	Johnson and others (1960)	Adverse effects on mortality in 1-day-old chicks	121	2.91E+01
Beryllium	NV	NA	NA	NA	NA	NA
Cadmium	1.04E+01	Navy (1998)	Richardson and others (1974)	Decrease in body and testis weight, hematocrit and hemoglobin; changes in liver trace element stores; histological effects to duodenum, bone marrow, and adrenal; increase in heart weight in the Japanese quail	84	7.82E+00
Chromium	5.00E+00	Sample and others (1996)	Haaseltine and others, unpublished data	Reduction of duckling survival in black ducks	1,250	2.18E+00
Copper	5.23E+01	Navy (1998)	Jensen and Maurice (1978)	Increase in gizzard erosion and feed to gain ratio, increase in relative gizzard and proventriculus weight in Cobb broiler chicks	409	2.86E+01
Lead	8.75E+00	Navy (1998)	Edens and Garlich (1983)	Decrease egg production in adult chickens	800	4.18E+00
Mercury	1.80E-01	Navy (1998)	Heinz and Locke (1976)	Reproductive effects in mallards	1,000	8.22E-02
Selenium	9.30E-01	Navy (1998)	Heinz and others (1989)	Decrease in hatchling success	1,108	4.16E-01
Zinc	1.72E+02	Navy (1998)	Gasaway and Buss (1972)	Decrease in body weight at 40 days, decrease in gonad weight, decrease in organ to body weight ratio (pancreas, adrenal, and kidney), decreases in pancreas and liver weight, leg paralysis, and diarrhea in mallard	955	7.93E+01

TABLE I-6: HIGH TOXICITY REFERENCE VALUES FOR THE ALAMEDA SONG SPARROW (MELOSPIZA MELODIA PUSILLULA)

Ecological Risk Assessment for Sites 9, 13, 19, 22, and 23, Alameda Point,

Ecological COPC	Literature-Based High TRV (mg/kg-day)	Source of Study	Study	Endpoint	Body Weight of Study Subject (g)	Allometrically Converted High TRV (mg/kg-day)
Pesticides						
Chlordane[b]	1.50E+00	Navy (1998)	Heath and others (1969), as cited in EPA 1995	Reproductive effects in mallards	1,000	6.85E-01
DDTt[c]	1.50E+00	Navy (1998)	Heath and others (1969), as cited in EPA 1995	Reproductive effects in mallards	1,000	6.85E-01
Heptachlor epoxide[b]	1.50E+00	Navy (1998)	Heath and others (1969), as cited in EPA 1995	Reproductive effects in mallards	1,000	6.85E-01
PCBs[d]						
Total PCBs	1.27E+00	Navy (1998)	Britton and Huston (1973)	Decrease in hatchability in chickens	1,715.40	5.21E-01
PAHs						
HMW PAHs[e]	NV	NA	NA	NA	NA	NA
LMW PAHs[f]	NV	NA	NA	NA	NA	NA
SVOCs						
4-Chloro-3-methylphenol	NV	NA	NA	NA	NA	NA
Bis(2-ethylhexyl)phthalate	1.10E+01	Sample and others (1996)	Peakall (1974)	Adverse reproductive effects in doves	155	7.30E+00
Carbazole	NV	NA	NA	NA	NA	NA
Diethylphthalate	NV	NA	NA	NA	NA	NA
Di-n-butylphthalate	1.10E+00	Sample and others (1996)	Peakall (1974)	Reproductive effects in doves	155	7.30E-01
n-Nitroso-diphenylamine	NV	NA	NA	NA	NA	NA
Pentachlorophenol	NV	NA	NA	NA	NA	NA
VOCs						
1,2-Dichloroethene	NV	NA	NA	NA	NA	NA
1,3-Dichlorobenzene	NV	NA	NA	NA	NA	NA
4-Methyl-2-pentanone	NV	NA	NA	NA	NA	NA
Acetone	NV	NA	NA	NA	NA	NA
Benzene	NV	NA	NA	NA	NA	NA
Carbon disulfide	NV	NA	NA	NA	NA	NA
Ethylbenzene	NV	NA	NA	NA	NA	NA
Methylene chloride	NV	NA	NA	NA	NA	NA
Tetrachloroethene	NV	NA	NA	NA	NA	NA
Toluene	NV	NA	NA	NA	NA	NA

TABLE I-6: HIGH TOXICITY REFERENCE VALUES FOR THE ALAMEDA SONG SPARROW (MELOSPIZA MELODIA PUSILLULA)

Ecological Risk Assessment for Sites 9, 13, 19, 22, and 23, Alameda Point,

Ecological COPC	Literature-Based High TRV (mg/kg-day)	Source of Study	Study	Endpoint	Body Weight of Study Subject (g)	Allometrically Converted High TRV (mg/kg-day)
VOCs (Continued)						
Trichloroethene	NV	NA	NA	NA	NA	NA
Xylene	NV	NA	NA	NA	NA	NA

Notes:

a	Individual TRV not developed for antimony. Based on arsenic TRV.
b	TRV of these compounds based on 4,4'-DDT; individual TRV not developed.
c	DDTt TRV based on DDT; individual TRVs not developed.
d	PCB TRV based on Aroclor 1254; individual TRVs not developed.
e	HMW PAHs are defined as measured PAHs with a molecular weight greater than 200 a.u. and include: benzo(a)fluorene, fluoranthene, benzo(k)fluoranthene, benzo(b)fluoranthene, benzo(b)fluorene, benzo(g,h,i)perylene, chrysene, benzo(a)anthracene, dibenzo(a,h)anthracene, indeno(1,2,3-cd)pyrene, pyrene, and benzo(a)pyrene. TRV based on benzo(a)pyrene.
f	LMW PAHs are defined as measured PAHs with a molecular weight below 200 a.u., including naphthalene, fluorene, anthracene, phenanthrene, anthracene, and 2-methylnaphthalene. TRV based on naphthalene.
a.u.	Atomic unit
COPC	Chemical of potential concern
DDT	Dichlorodiphenyltrichloroethane
DDTt	Sum of concentrations of 4,4'-dichlorodiphenyldichloroethane, 4,4'-dichlorodiphenyldichloroethene, and 4,4'-dichlorodiphenyltrichloroethane
EPA	U.S. Environmental Protection Agency
g	Gram
HMW	High molecular weight
LMW	Low molecular weight
mg/kg-day	Milligram per kilogram per day
NA	Not applicable
Navy	U.S. Department of Navy
NOAEL	No observed adverse effects level
NV	No value available
PAH	Polynuclear aromatic hydrocarbon
PCB	Polychlorinated biphenyl
SVOC	Semivolatile organic chemical
TRV	Toxicity reference value
VOC	Volatile organic chemical

References:

Navy. 1998. "Interim Final Technical Memorandum, Development of Toxicity Reference Values for Conducting Ecological Risk Assessments at Naval Facilities in California." September.

Sample, B.E., D.M. Opresko, and G.W. Suter, II. 1996. "Toxicological Benchmarks for Wildlife: 1996 Revision." ES/ER/TM-86/R3. Oak Ridge National Laboratory. Oak Ridge, Tennessee.

TABLE I-7: LOW TOXICITY REFERENCE VALUES FOR THE ALAMEDA SONG SPARROW (MELOSPIZA MELODIA PUSILLULA)

Ecological Risk Assessment for Sites 9, 13, 19, 22, and 23, Alameda Point,

Ecological COPC	Literature-Based Low TRV (mg/kg-day)	Source of Study	Study	Endpoint	Body Weight of Study Subject (g)	Allometrically Converted Low TRV (mg/kg-day)
Metals						
Antimony[a]	5.50E+00	Navy (1998)	Stanley, Jr., and others (1994)	Adverse effect on liver weight, glycogen depletion, number of days between pairing and first egg, whole-egg weight, duckling body and liver weights posthatching, duckling growth rate, and duckling production in mallards	1,172	2.43E+00
Arsenic	5.50E+00	Navy (1998)	Stanley, Jr., and others (1994)	Adverse effect on liver weight, glycogen depletion, number of days between pairing and first egg, whole-egg weight, duckling body and liver weights posthatching, duckling growth rate, and duckling production in mallards	1,172	2.43E+00
Barium	2.08E+01	Sample and others (1996)	Johnson and others (1960)	Adverse effects on mortality in 1-day-old chicks	121	1.45E+01
Beryllium	NV	NA	NA	NA	NA	NA
Cadmium	8.00E-02	Navy (1998)	Cain and others (1983)	No observed adverse effect level for blood chemistry in mallards	798.5	3.82E-02
Chromium	1.00E+00	Sample and others (1996)	Haaseltine and others, unpublished data	Reduction of duckling survival in black ducks	1,250	4.37E-01
Copper	2.30E+00	Navy (1998)	Norvell and others (1975)	Adverse effects on weight gain in boilers	639	1.15E+00
Lead	1.40E-02	Navy (1998)	Edens and others (1976)	Decrease in female egg production and plasma calcium; decrease in male testicular and liver weight in Japanese quail	103	1.01E-02
Lead (Alternate)	3.85E+00	Sample and others (1996)	Pattee (1984)	Adverse reproductive effects in the American kestral	130	2.65E+00
Mercury	3.90E-02	Navy (1998)	Heinz (1974, 1975, 1976, 1979)	Reproductive effects in mallards	1,000	1.78E-02
Selenium	2.30E-01	Navy (1998)	Heinz and others (1989)	Adverse effects in hatchling body weight and survival, effect on number of hatchlings produced per hen, and malformed embryos in mallards	1,107	1.03E-01
Zinc	1.72E+01	Navy (1998)	Gasaway and Buss (1972)	Decrease in body weight at 40 days, decrease in gonad weight, decrease in organ to body weight ratio (pancreas, adrenal, and kidney), decreases in pancreas and liver weight, leg paralysis, and diarrhea in mallards	955	7.93E+00
Pesticides						
Chlordane[b]	9.00E-03	Navy (1998)	Anderson and others (1975, 1977, as cited in EPA 1995)	Reproductive effects in pelicans	3,500	3.20E-03
DDTt[c]	9.00E-03	Navy (1998)	Anderson and others (1975, 1977, as cited in EPA 1995)	Reproductive effects in pelicans	3,500	3.20E-03
Heptachlor epoxide[b]	9.00E-03	Navy (1998)	Anderson and others (1975, 1977, as cited in EPA 1995)	Reproductive effects in pelicans	3,500	3.20E-03

TABLE I-7: LOW TOXICITY REFERENCE VALUES FOR THE ALAMEDA SONG SPARROW (MELOSPIZA MELODIA PUSILLULA)

Ecological Risk Assessment for Sites 9, 13, 19, 22, and 23, Alameda Point,

Ecological COPC	Literature-Based Low TRV (mg/kg-day)	Source of Study	Study	Endpoint	Body Weight of Study Subject (g)	Allometrically Converted Low TRV (mg/kg-day)
PCBs[d]						
Total PCBs	9.00E-02	Navy (1998)	Platonow and Reinhart (1973)	Decrease in egg production in chickens	800	4.30E-02
PAHs						
HMW PAHs[e]	NV	NA	NA	NA	NA	NA
LMW PAHs[f]	NV	NA	NA	NA	NA	NA
SVOCs						
4-Chloro-3-methylphenol	NV	NA	NA	NA	NA	NA
Bis(2-ethylhexyl)phthalate	1.10E+00	Sample and others (1996)	Peakall (1974)	Adverse reproductive effects in doves	155	7.30E-01
Carbazole	NV	NA	NA	NA	NA	NA
Diethylphthalate	NV	NA	NA	NA	NA	NA
Di-n-butylphthalate	1.10E-01	Sample and others (1996)	Peakall (1974)	Reproductive effects in doves	155	7.30E-02
n-Nitroso-diphenylamine	NV	NA	NA	NA	NA	NA
Pentachlorophenol	NV	NA	NA	NA	NA	NA
VOCs						
1,2-Dichloroethene	NV	NA	NA	NA	NA	NA
1,3-Dichlorobenzene	NV	NA	NA	NA	NA	NA
4-Methyl-2-pentanone	NV	NA	NA	NA	NA	NA
Acetone	NV	NA	NA	NA	NA	NA
Benzene	NV	NA	NA	NA	NA	NA
Carbon disulfide	NV	NA	NA	NA	NA	NA
Ethylbenzene	NV	NA	NA	NA	NA	NA
Methylene chloride	NV	NA	NA	NA	NA	NA
Tetrachloroethene	NV	NA	NA	NA	NA	NA
Toluene	NV	NA	NA	NA	NA	NA
Trichloroethene	NV	NA	NA	NA	NA	NA
Xylene	NV	NA	NA	NA	NA	NA

TABLE I-7: LOW TOXICITY REFERENCE VALUES FOR THE ALAMEDA SONG SPARROW (MELOSPIZA MELODIA PUSILLULA)

Ecological Risk Assessment for Sites 9, 13, 19, 22, and 23, Alameda Point,

Ecological COPC	Literature-Based Low TRV (mg/kg-day)	Source of Study	Study	Endpoint	Body Weight of Study Subject (g)	Allometrically Converted Low TRV (mg/kg-day)

Notes:

a	Individual TRV not developed for antimony. Based on arsenic TRV.
b	TRV of these compounds based on 4,4'-DDT; individual TRV not developed.
c	DDTt TRV based on DDT; individual TRVs not developed.
d	PCB TRV based on Aroclor 1254; individual TRVs not developed.
e	HMW PAHs are defined as measured PAHs with a molecular weight greater than 200 a.u. and include: benzo(a)fluorene, fluoranthene, benzo(k)fluoranthene, benzo(b)fluoranthene, benzo(b)fluorene, benzo(g,h,i)perylene, chrysene, benzo(a)anthracene, dibenzo(a,h)anthracene, indeno(1,2,3-cd)pyrene, pyrene, and benzo(a)pyrene. TRV based on benzo(a)pyrene.
f	LMW PAHs are defined as measured PAHs with a molecular weight below 200 a.u., including naphthalene, fluorene, anthracene, phenanthrene, anthracene, and 2-methylnaphthalene. TRV based on naphthalene.
a.u.	Atomic unit
COPC	Chemical of potential concern
DDT	Dichlorodiphenyltrichloroethane
DDTt	Sum of concentrations of 4,4'-dichlorodiphenyldichloroethane, 4,4'-dichlorodiphenyldichloroethene, and 4,4'-dichlorodiphenyltrichloroethane
EPA	U.S. Environmental Protection Agency
g	Gram
HMW	High molecular weight
LMW	Low molecular weight
mg/kg-day	Milligram per kilogram per day
NA	Not applicable
Navy	U.S. Department of Navy
NOAEL	No observed adverse effects level
NV	No value available
PAH	Polynuclear aromatic hydrocarbon
PCB	Polychlorinated biphenyl
SVOC	Semivolatile organic chemical
TRV	Toxicity reference value
VOC	Volatile organic chemical

References:

Navy. 1998. "Interim Final Technical Memorandum, Development of Toxicity Reference Values for Conducting Ecological Risk Assessments at Naval Facilities in California." September.

Sample, B.E., D.M. Opresko, and G.W. Suter, II. 1996. "Toxicological Benchmarks for Wildlife: 1996 Revision." ES/ER/TM-86/R3. Oak Ridge National Laboratory. Oak Ridge, Tennessee.

TABLE I-8: HIGH TOXICITY REFERENCE VALUES FOR THE AMERICAN ROBIN (TURDUS MIGRATORIUS)

Ecological Risk Assessment for Sites 9, 13, 19, 22, and 23, Alameda Point, Alameda,

Ecological COPC	Literature-Based High TRV (mg/kg-day)	Source of Study	Study	Endpoint	Body Weight of Study Subject (g)	Allometrically Converted High TRV (mg/kg-day)
Metals						
Antimony[a]	2.20E+01	Navy (1998)	Stanley, Jr., and others (1994)	Adverse effect on liver weight, glycogen depletion, number of days between pairing and first egg, whole-egg weight, duckling body and liver weights posthatching, duckling growth rate, and duckling production in mallards	1,172	1.29E+01
Arsenic	2.20E+01	Navy (1998)	Stanley, Jr., and others (1994)	Adverse effect on liver weight, glycogen depletion, number of days between pairing and first egg, whole-egg weight, duckling body and liver weights posthatching, duckling growth rate, and duckling production in mallards	1,172	1.29E+01
Barium	4.17E+01	Sample and others (1996)	Johnson and others (1960)	Adverse effects on mortality in 1-day-old chicks	121	3.85E+01
Beryllium	NV	NA	NA	NA	NA	NA
Cadmium	1.04E+01	Navy (1998)	Richardson and others (1974)	Decrease in body and testis weight, hematocrit and hemoglobin; changes in liver trace element stores; histological effects to duodenum, bone marrow, and adrenal; increase in heart weight in the Japanese quail	84	1.04E+01
Chromium	5.00E+00	Sample and others (1996)	Haaseltine and others, unpublished data	Reduction of duckling survival in black ducks	1,250	2.89E+00
Copper	5.23E+01	Navy (1998)	Jensen and Maurice (1978)	Increase in gizzard erosion and feed to gain ratio, increase in relative gizzard and proventriculus weight in Cobb broiler chicks	409	3.78E+01
Lead	8.75E+00	Navy (1998)	Edens and Garlich (1983)	Decrease egg production in adult chickens	800	5.53E+00
Mercury	1.80E-01	Navy (1998)	Heinz and Locke (1976)	Reproductive effects in mallards	1,000	1.09E-01
Selenium	9.30E-01	Navy (1998)	Heinz and others (1989)	Decrease in hatchling success	1,108	5.51E-01
Zinc	1.72E+02	Navy (1998)	Gasaway and Buss (1972)	Decrease in body weight at 40 days, decrease in gonad weight, decrease in organ to body weight ratio (pancreas, adrenal, and kidney), decreases in pancreas and liver weight, leg paralysis, and diarrhea in mallard	955	1.05E+02

TABLE I-8: HIGH TOXICITY REFERENCE VALUES FOR THE AMERICAN ROBIN (TURDUS MIGRATORIUS)
Ecological Risk Assessment for Sites 9, 13, 19, 22, and 23, Alameda Point, Alameda,

Ecological COPC	Literature-Based High TRV (mg/kg-day)	Source of Study	Study	Endpoint	Body Weight of Study Subject (g)	Allometrically Converted High TRV (mg/kg-day)
Pesticides						
Chlordane[b]	1.50E+00	Navy (1998)	Heath and others (1969), as cited in EPA 1995)	Reproductive effects in mallards	1,000	9.07E-01
DDTt[c]	1.50E+00	Navy (1998)	Heath and others (1969), as cited in EPA (1995)	Reproductive effects in mallards	1,000	9.07E-01
Heptachlor epoxide[b]	1.50E+00	Navy (1998)	Heath and others (1969), as cited in EPA (1995)	Reproductive effects in mallards	1,000	9.07E-01
PCBs[d]						
Total PCBs	1.27E+00	Navy (1998)	Britton and Huston (1973)	Decrease in hatchability in chickens	1715.4	6.90E-01
PAHs						
HMW PAHs[e]	NV	NA	NA	NA	NA	NA
LMW PAHs[f]	NV	NA	NA	NA	NA	NA
SVOCs						
4-Chloro-3-methylphenol	NV	NA	NA	NA	NA	NA
Bis(2-ethylhexyl)phthalate	1.10E+01	Sample and others (1996)	Peakall (1974)	Adverse reproductive effects in doves	155	9.66E+00
Carbazole	NV	NA	NA	NA	NA	NA
Diethylphthalate	NV	NA	NA	NA	NA	NA
Di-n-butylphthalate	1.10E+00	Sample and others (1996)	Peakall (1974)	Reproductive effects in doves	155	9.66E-01
n-Nitroso-diphenylamine	NV	NA	NA	NA	NA	NA
Pentachlorophenol	NV	NA	NA	NA	NA	NA
VOCs						
1,2-Dichloroethene	NV	NA	NA	NA	NA	NA
1,3-Dichlorobenzene	NV	NA	NA	NA	NA	NA
4-Methyl-2-pentanone	NV	NA	NA	NA	NA	NA
Acetone	NV	NA	NA	NA	NA	NA
Benzene	NV	NA	NA	NA	NA	NA
Carbon disulfide	NV	NA	NA	NA	NA	NA
Ethylbenzene	NV	NA	NA	NA	NA	NA
Methylene chloride	NV	NA	NA	NA	NA	NA
Tetrachloroethene	NV	NA	NA	NA	NA	NA
Toluene	NV	NA	NA	NA	NA	NA

TABLE I-8: HIGH TOXICITY REFERENCE VALUES FOR THE AMERICAN ROBIN (TURDUS MIGRATORIUS)

Ecological Risk Assessment for Sites 9, 13, 19, 22, and 23, Alameda Point, Alameda,

Ecological COPC	Literature-Based High TRV (mg/kg-day)	Source of Study	Study	Endpoint	Body Weight of Study Subject (g)	Allometrically Converted High TRV (mg/kg-day)
VOCs (Continued)						
Trichloroethene	NV	NA	NA	NA	NA	NA
Xylene	NV	NA	NA	NA	NA	NA

Notes:

a	Individual TRV not developed for antimony. Based on arsenic TRV.
b	TRV of these compounds based on 4,4'-DDT; individual TRV not developed.
c	DDTt TRV based on DDT; individual TRVs not developed.
d	PCB TRV based on Aroclor 1254; individual TRVs not developed.
e	HMW PAHs are defined as measured PAHs with a molecular weight greater than 200 a.u. and include: benzo(a)fluorene, fluoranthene, benzo(k)fluoranthene, benzo(b)fluoranthene, benzo(b)fluorene, benzo(g,h,i)perylene, chrysene, benzo(a)anthracene, dibenzo(a,h)anthracene, indeno(1,2,3-cd)pyrene, pyrene, and benzo(a)pyrene. TRV based on benzo(a)pyrene.
f	LMW PAHs are defined as measured PAHs with a molecular weight below 200 a.u., including naphthalene, fluorene, anthracene, phenanthrene, anthracene, and 2-methylnaphthalene. TRV based on naphthalene.
a.u.	Atomic unit
COPC	Chemical of potential concern
DDT	Dichlorodiphenyltrichloroethane
DDTt	Sum of concentrations of 4,4'-dichlorodiphenyldichloroethane, 4,4'-dichlorodiphenyldichloroethene, and 4,4'-dichlorodiphenyltrichloroethane
EPA	U.S. Environmental Protection Agency
g	Gram
HMW	High molecular weight
LMW	Low molecular weight
mg/kg-day	Milligram per kilogram per day
NA	Not applicable
Navy	U.S. Department of Navy
NOAEL	No observed adverse effects level
NV	No value available
PAH	Polynuclear aromatic hydrocarbon
PCB	Polychlorinated biphenyl
SVOC	Semivolatile organic chemical
TRV	Toxicity reference value
VOC	Volatile organic chemical

References:

Navy. 1998. "Interim Final Technical Memorandum, Development of Toxicity Reference Values for Conducting Ecological Risk Assessments at Naval Facilities in California." September.

Sample, B.E., D.M. Opresko, and G.W. Suter, II. 1996. "Toxicological Benchmarks for Wildlife: 1996 Revision." ES/ER/TM-86/R3. Oak Ridge National Laboratory. Oak Ridge, Tennessee.

TABLE I-9: LOW TOXICITY REFERENCE VALUES FOR THE AMERICAN ROBIN (TURDUS MIGRATORIUS)

Ecological Risk Assessment for SItes 9, 13, 19, 22, and 23, Alameda Point, Alameda, California

Ecological COPC	Literature-Based Low TRV (mg/kg-day)	Source of Study	Study	Endpoint	Body Weight of Study Subject (g)	Allometrically Converted Low TRV (mg/kg-day)
Metals						
Antimony[a]	5.50E+00	Navy (1998)	Stanley, Jr., and others (1994)	Adverse effect on liver weight, glycogen depletion, number of days between pairing and first egg, whole-egg weight, duckling body and liver weights posthatching, duckling growth rate, and duckling production in mallards	1,172	3.22E+00
Arsenic	5.50E+00	Navy (1998)	Stanley, Jr., and others (1994)	Adverse effect on liver weight, glycogen depletion, number of days between pairing and first egg, whole-egg weight, duckling body and liver weights posthatching, duckling growth rate, and duckling production in mallards	1,172	3.22E+00
Barium	2.08E+01	Sample and others (1996)	Johnson and others (1960)	Adverse effects on mortality in 1-day-old chicks	121	1.92E+01
Beryllium	NV	NA	NA	NA	NA	NA
Cadmium	8.00E-02	Navy (1998)	Cain and others (1983)	No observed adverse effect level for blood chemistry in mallards	798.5	5.06E-02
Chromium	1.00E+00	Sample and others (1996)	Haaseltine and others, unpublished data	Reduction of duckling survival in black ducks	1,250	5.79E-01
Copper	2.30E+00	Navy (1998)	Norvell and others (1975)	Adverse effects on weight gain in boilers	639	1.52E+00
Lead	1.40E-02	Navy (1998)	Edens and others (1976)	Decrease in female egg production and plasma calcium; decrease in male testicular and liver weight in Japanese quail	103	1.33E-02
Lead (Alternate)	3.85E+00	Sample and others (1996)	Pattee (1984)	Adverse reproductive effects in the American kestrel	130	3.50E+00
Mercury	3.90E-02	Navy (1998)	Heinz (1974, 1975, 1976, 1979)	Reproductive effects in mallards	1,000	2.36E-02
Selenium	2.30E-01	Navy (1998)	Heinz and others (1989)	Adverse effects in hatchling body weight and survival, effect on number of hatchlings produced per hen, and malformed embryos in mallards	1,107	1.36E-01
Zinc	1.72E+01	Navy (1998)	Gasaway and Buss (1972)	Decrease in body weight at 40 days, decrease in gonad weight, decrease in organ to body weight ratio (pancreas, adrenal, and kidney), decreases in pancreas and liver weight, leg paralysis, and diarrhea in mallards	955	1.05E+01

TABLE I-9: LOW TOXICITY REFERENCE VALUES FOR THE AMERICAN ROBIN (TURDUS MIGRATORIUS)

Ecological Risk Assessment for SIte s 9, 13, 19, 22, and 23, Alameda Point, Alameda, California

Ecological COPC	Literature-Based Low TRV (mg/kg-day)	Source of Study	Study	Endpoint	Body Weight of Study Subject (g)	Allometrically Converted Low TRV (mg/kg-day)
Pesticides						
Chlordane[b]	9.00E-03	Navy (1998)	Anderson and others (1975, 1977, as cited in EPA 1995)	Reproductive effects in pelicans	3,500	4.24E-03
DDTt[c]	9.00E-03	Navy (1998)	Anderson and others (1975, 1977, as cited in EPA 1995)	Reproductive effects in pelicans	3,500	4.24E-03
Heptachlor epoxide[b]	9.00E-03	Navy (1998)	Anderson and others (1975, 1977, as cited in EPA 1995)	Reproductive effects in pelicans	3,500	4.24E-03
PCBs[d]						
Total PCBs	9.00E-02	Navy (1998)	Platonow and Reinhart (1973)	Decrease in egg production in chickens	800	5.69E-02
PAHs						
HMW PAHs[e]	NV	NA	NA	NA	NA	NA
LMW PAHs[f]	NV	NA	NA	NA	NA	NA
SVOCs						
4-Chloro-3-methylphenol	NV	NA	NA	NA	NA	NA
Bis(2-ethylhexyl)phthalate	1.10E+00	Sample and others (1996)	Peakall (1974)	Adverse reproductive effects in doves	155	9.66E-01
Carbazole	NV	NA	NA	NA	NA	NA
Diethylphthalate	NV	NA	NA	NA	NA	NA
Di-n-butylphthalate	1.10E-01	Sample and others (1996)	Peakall (1974)	Reproductive effects in doves	155	9.66E-02
n-Nitroso-diphenylamine	NV	NA	NA	NA	NA	NA
Pentachlorophenol	NV	NA	NA	NA	NA	NA
VOCs						
1,2-Dichloroethene	NV	NA	NA	NA	NA	NA
1,3-Dichlorobenzene	NV	NA	NA	NA	NA	NA
4-Methyl-2-pentanone	NV	NA	NA	NA	NA	NA
Acetone	NV	NA	NA	NA	NA	NA
Benzene	NV	NA	NA	NA	NA	NA
Carbon disulfide	NV	NA	NA	NA	NA	NA
Ethylbenzene	NV	NA	NA	NA	NA	NA
Methylene chloride	NV	NA	NA	NA	NA	NA

TABLE I-9: LOW TOXICITY REFERENCE VALUES FOR THE AMERICAN ROBIN (TURDUS MIGRATORIUS)

Ecological Risk Assessment for SIites 9, 13, 19, 22, and 23, Alameda Point, Alameda, California

Ecological COPC	Literature-Based Low TRV (mg/kg-day)	Source of Study	Study	Endpoint	Body Weight of Study Subject (g)	Allometrically Converted Low TRV (mg/kg-day)
Tetrachloroethene	NV	NA	NA	NA	NA	NA
Toluene	NV	NA	NA	NA	NA	NA
VOCs (Continued)						
Trichloroethene	NV	NA	NA	NA	NA	NA
Xylene	NV	NA	NA	NA	NA	NA

Notes:

a	Individual TRV not developed for antimony. Based on arsenic TRV.
b	TRV of these compounds based on 4,4'-DDT; individual TRV not developed.
c	DDTt TRV based on DDT; individual TRVs not developed.
d	PCB TRV based on Aroclor 1254; individual TRVs not developed.
e	HMW PAHs are defined as measured PAHs with a molecular weight greater than 200 a.u. and include: benzo(a)fluorene, fluoranthene, benzo(k)fluoranthene, benzo(b)fluoranthene, benzo(b)fluorene, benzo(g,h,i)perylene, chrysene, benzo(a)anthracene, dibenzo(a,h)anthracene, indeno(1,2,3-cd)pyrene, pyrene, and benzo(a)pyrene. TRV based on benzo(a)pyrene.
f	LMW PAHs are defined as measured PAHs with a molecular weight below 200 a.u., including naphthalene, fluorene, anthracene, phenanthrene, anthracene, and 2-methylnaphthalene. TRV based c naphthalene.
a.u.	Atomic unit
COPC	Chemical of potential concern
DDT	Dichlorodiphenyltrichloroethane
DDTt	Sum of concentrations of 4,4'-dichlorodiphenyldichloroethane, 4,4'-dichlorodiphenyldichloroethene, and 4,4'-dichlorodiphenyltrichloroethane
EPA	U.S. Environmental Protection Agency
g	Gram
HMW	High molecular weight
LMW	Low molecular weight
mg/kg-day	Milligram per kilogram per day
NA	Not applicable
Navy	U.S. Department of Navy
NOAEL	No observed adverse effects level
NV	No value available
PAH	Polynuclear aromatic hydrocarbon
PCB	Polychlorinated biphenyl
SVOC	Semivolatile organic chemical
TRV	Toxicity reference value
VOC	Volatile organic chemical

References:

Navy. 1998. "Interim Final Technical Memorandum, Development of Toxicity Reference Values for Conducting Ecological Risk Assessments at Naval Facilities in California." September.

Sample, B.E., D.M. Opresko, and G.W. Suter, II. 1996. "Toxicological Benchmarks for Wildlife: 1996 Revision." ES/ER/TM-86/R3. Oak Ridge National Laboratory. Oak Ridge, Tennessee.

TABLE I-10: HIGH TOXICITY REFERENCE VALUES FOR THE RED-TAILED HAWK (BUTEO JAMAICENSIS)

Ecological Risk Assessment for Sites 9, 13, 19, 22, and 23, Alameda Point, Alameda,

Ecological COPC	Literature-Based High TRV (mg/kg-day)	Source of Study	Study	Endpoint	Body Weight of Study Subject (g)	Allometrically Converted High TRV (mg/kg-day)
Metals						
Antimony[a]	2.20E+01	Navy (1998)	Stanley, Jr., and others (1994)	Adverse effect on liver weight, glycogen depletion, number of days between pairing and first egg, whole-egg weight, duckling body and liver weights posthatching, duckling growth rate, and duckling production in mallards	1,172	2.18E+01
Arsenic	2.20E+01	Navy (1998)	Stanley, Jr., and others (1994)	Adverse effect on liver weight, glycogen depletion, number of days between pairing and first egg, whole-egg weight, duckling body and liver weights posthatching, duckling growth rate, and duckling production in mallards	1,172	2.18E+01
Barium	4.17E+01	Sample and others (1996)	Johnson and others (1960)	Adverse effects on mortality in 1-day-old chicks	121	6.52E+01
Beryllium	NV	NA	NA	NA	NA	NA
Cadmium	1.04E+01	Navy (1998)	Richardson and others (1974)	Decrease in body and testis weight, hematocrit and hemoglobin; changes in liver trace element stores; histological effects to duodenum, bone marrow, and adrenal; increase in heart weight in the Japanese quail	84	1.75E+01
Chromium	5.00E+00	Sample and others (1996)	Haaseltine and others, unpublished data	Reduction of duckling survival in black ducks	1,250	4.90E+00
Copper	5.23E+01	Navy (1998)	Jensen and Maurice (1978)	Increase in gizzard erosion and feed to gain ratio, increase in relative gizzard and proventriculus weight in Cobb broiler chicks	409	6.41E+01
Lead	8.75E+00	Navy (1998)	Edens and Garlich (1983)	Decrease egg production in adult chickens	800	9.38E+00
Mercury	1.80E-01	Navy (1998)	Heinz and Locke (1976)	Reproductive effects in mallards	1,000	1.84E-01
Selenium	9.30E-01	Navy (1998)	Heinz and others (1989)	Decrease in hatchling success	1,108	9.34E-01
Zinc	1.72E+02	Navy (1998)	Gasaway and Buss (1972)	Decrease in body weight at 40 days, decrease in gonad weight, decrease in organ to body weight ratio (pancreas, adrenal, and kidney), decreases in pancreas and liver weight, leg paralysis, and diarrhea in mallard ducks	955	1.78E+02

TABLE I-10: HIGH TOXICITY REFERENCE VALUES FOR THE RED-TAILED HAWK (BUTEO JAMAICENSIS)

Ecological Risk Assessment for Sites 9, 13, 19, 22, and 23, Alameda Point, Alameda,

Ecological COPC	Literature-Based High TRV (mg/kg-day)	Source of Study	Study	Endpoint	Body Weight of Study Subject (g)	Allometrically Converted High TRV (mg/kg-day)
Pesticides						
Chlordane[b]	1.50E+00	Navy (1998)	Heath and others (1969), as cited in EPA (1995)	Reproductive effects in mallards	1,000	1.54E+00
DDTt[c]	1.50E+00	Navy (1998)	Heath and others (1969), as cited in EPA (1995)	Reproductive effects in mallards	1,000	1.54E+00
Heptachlor epoxide[b]	1.50E+00	Navy (1998)	Heath and others (1969), as cited in EPA (1995)	Reproductive effects in mallards	1,000	1.54E+00
PCBs[d]						
Total PCBs	1.27E+00	Navy (1998)	Britton and Huston (1973)	Decrease in hatchability in chickens	1715.4	1.17E+00
PAHs						
HMW PAHs[e]	NV	NA	NA	NA	NA	NA
LMW PAHs[f]	NV	NA	NA	NA	NA	NA
SVOCs						
4-Chloro-3-methylphenol	NV	NA	NA	NA	NA	NA
Bis(2-ethylhexyl)phthalate	1.10E+01	Sample and others (1996)	Peakall (1974)	Adverse reproductive effects in doves	155	1.64E+01
Carbazole	NV	NA	NA	NA	NA	NA
Diethylphthalate	NV	NA	NA	NA	NA	NA
Di-n-butylphthalate	1.10E+00	Sample and others (1996)	Peakall (1974)	Reproductive effects in doves	155	1.64E+00
n-Nitroso-diphenylamine	NV	NA	NA	NA	NA	NA
Pentachlorophenol	NV	NA	NA	NA	NA	NA
VOCs						
1,2-Dichloroethene	NV	NA	NA	NA	NA	NA
1,3-Dichlorobenzene	NV	NA	NA	NA	NA	NA
4-Methyl-2-pentanone	NV	NA	NA	NA	NA	NA
Acetone	NV	NA	NA	NA	NA	NA
Benzene	NV	NA	NA	NA	NA	NA
Carbon disulfide	NV	NA	NA	NA	NA	NA
Ethylbenzene	NV	NA	NA	NA	NA	NA
Methylene chloride	NV	NA	NA	NA	NA	NA
Tetrachloroethene	NV	NA	NA	NA	NA	NA
Toluene	NV	NA	NA	NA	NA	NA

TABLE I-10: HIGH TOXICITY REFERENCE VALUES FOR THE RED-TAILED HAWK (BUTEO JAMAICENSIS)

Ecological Risk Assessment for Sites 9, 13, 19, 22, and 23, Alameda Point, Alameda,

Ecological COPC	Literature-Based High TRV (mg/kg-day)	Source of Study	Study	Endpoint	Body Weight of Study Subject (g)	Allometrically Converted High TRV (mg/kg-day)
VOCs (Continued)						
Trichloroethene	NV	NA	NA	NA	NA	NA
Xylene	NV	NA	NA	NA	NA	NA

Notes:

a	Individual TRV not developed for antimony. Based on arsenic TRV.
b	TRV of these compounds based on 4,4'-DDT; individual TRV not developed.
c	DDTt TRV based on DDT; individual TRVs not developed.
d	PCB TRV based on Aroclor 1254; individual TRVs not developed.
e	HMW PAHs are defined as measured PAHs with a molecular weight greater than 200 a.u. and include: benzo(a)fluorene, fluoranthene, benzo(k)fluoranthene, benzo(b)fluoranthene, benzo(b)fluorene, benzo(g,h,i)perylene, chrysene, benzo(a)anthracene, dibenzo(a,h)anthracene, indeno(1,2,3-cd)pyrene, pyrene, and benzo(a)pyrene. TRV based on benzo(a)pyrene.
f	LMW PAHs are defined as measured PAHs with a molecular weight below 200 a.u., including naphthalene, fluorene, anthracene, phenanthrene, anthracene, and 2-methylnaphthalene. TRV based on naphthalene.
a.u.	Atomic unit
COPC	Chemical of potential concern
DDT	Dichlorodiphenyltrichloroethane
DDTt	Sum of concentrations of 4,4'-dichlorodiphenyldichloroethane, 4,4'-dichlorodiphenyldichloroethene, and 4,4'-dichlorodiphenyltrichloroethane
EPA	U.S. Environmental Protection Agency
g	Gram
HMW	High molecular weight
LMW	Low molecular weight
mg/kg-day	Milligram per kilogram per day
NA	Not applicable
Navy	U.S. Department of Navy
NOAEL	No observed adverse effects level
NV	No value available
PAH	Polynuclear aromatic hydrocarbon
PCB	Polychlorinated biphenyl
SVOC	Semivolatile organic chemical
TRV	Toxicity reference value
VOC	Volatile organic chemical

References:

Navy. 1998. "Interim Final Technical Memorandum, Development of Toxicity Reference Values for Conducting Ecological Risk Assessments at Naval Facilities in California." September.

Sample, B.E., D.M. Opresko, and G.W. Suter, II. 1996. "Toxicological Benchmarks for Wildlife: 1996 Revision." ES/ER/TM-86/R3. Oak Ridge National Laboratory. Oak Ridge, Tennessee.

TABLE I-11: LOW TOXICITY REFERENCE VALUES FOR THE RED-TAILED HAWK (BUTEO JAMAICENSIS)

Ecological Risk Assessment for Sites 9, 13, 19, 22, and 23, Alameda Point, Alameda,

Ecological COPC	Literature-Based Low TRV (mg/kg-day)	Source of Study	Study	Endpoint	Body Weight of Study Subject (g)	Allometrically Converted Low TRV (mg/kg-day)
Metals						
Antimony[a]	5.50E+00	Navy (1998)	Stanley, Jr., and others (1994)	Adverse effect on liver weight, glycogen depletion, number of days between pairing and first egg, whole-egg weight, duckling body and liver weights posthatching, duckling growth rate, and duckling production in mallards	1,172	5.46E+00
Arsenic	5.50E+00	Navy (1998)	Stanley, Jr., and others (1994)	Adverse effect on liver weight, glycogen depletion, number of days between pairing and first egg, whole-egg weight, duckling body and liver weights posthatching, duckling growth rate, and duckling production in mallards	1,172	5.46E+00
Barium	2.08E+01	Sample and others (1996)	Johnson and others (1960)	Adverse effects on mortality in 1-day-old chicks	121	3.25E+01
Beryllium	NV	NA	NA	NA	NA	NA
Cadmium	8.00E-02	Navy (1998)	Cain and others (1983)	No observed adverse effect level for blood chemistry in mallards	798.5	8.58E-02
Chromium	1.00E+00	Sample and others (1996)	Haaseltine and others, unpublished data	Reduction of duckling survival in black ducks	1,250	9.80E-01
Copper	2.30E+00	Navy (1998)	Norvell and others (1975)	Adverse effects on weight gain in boilers	639	2.58E+00
Lead	1.40E-02	Navy (1998)	Edens and others (1976)	Decrease in female egg production and plasma calcium; decrease in male testicular and liver weight in Japanese quail	103	2.26E-02
Lead (Alternate)	3.85E+00	Sample and others (1996)	Pattee (1984)	Adverse reproductive effects in the American kestral	130	5.93E+00
Mercury	3.90E-02	Navy (1998)	Heinz (1974, 1975, 1976, 1979)	Reproductive effects in mallards	1,000	4.00E-02
Selenium	2.30E-01	Navy (1998)	Heinz and others (1989)	Adverse effects in hatchling body weight and survival, effect on number of hatchlings produced per hen, and malformed embryos in mallards	1,107	2.31E-01
Zinc	1.72E+01	Navy (1998)	Gasaway and Buss (1972)	Decrease in body weight at 40 days, decrease in gonad weight, decrease in organ to body weight ratio (pancreas, adrenal, and kidney), decreases in pancreas and liver weight, leg paralysis, and diarrhea in mallards	955	1.78E+01

TABLE I-11: LOW TOXICITY REFERENCE VALUES FOR THE RED-TAILED HAWK (BUTEO JAMAICENSIS)
Ecological Risk Assessment for Sites 9, 13, 19, 22, and 23, Alameda Point, Alameda,

Ecological COPC	Literature-Based Low TRV (mg/kg-day)	Source of Study	Study	Endpoint	Body Weight of Study Subject (g)	Allometrically Converted Low TRV (mg/kg-day)
Pesticides						
Chlordane[b]	9.00E-03	Navy (1998)	Anderson and others (1975, 1977, as cited in EPA 1995)	Reproductive effects in pelicans	3,500	7.18E-03
DDTt[c]	9.00E-03	Navy (1998)	Anderson and others (1975, 1977, as cited in EPA 1995)	Reproductive effects in pelicans	3,500	7.18E-03
Heptachlor epoxide[b]	9.00E-03	Navy (1998)	Anderson and others (1975, 1977, as cited in EPA 1995)	Reproductive effects in pelicans	3,500	7.18E-03
PCBs[d]						
Total PCBs	9.00E-02	Navy (1998)	Platonow and Reinhart (1973)	Decrease in egg production in chickens	800	9.64E-02
PAHs						
HMW PAHs[e]	NV	NA	NA	NA	NA	NA
LMW PAHs[f]	NV	NA	NA	NA	NA	NA
SVOCs						
4-Chloro-3-methylphenol	NV	NA	NA	NA	NA	NA
Bis(2-ethylhexyl)phthalate	1.10E+00	Sample and others (1996)	Peakall (1974)	Adverse reproductive effects in doves	155	1.64E+00
Carbazole	NV	NA	NA	NA	NA	NA
Diethylphthalate	NV	NA	NA	NA	NA	NA
Di-n-butylphthalate	1.10E-01	Sample and others (1996)	Peakall (1974)	Reproductive effects in doves	155	1.64E-01
n-Nitroso-diphenylamine	NV	NA	NA	NA	NA	NA
Pentachlorophenol	NV	NA	NA	NA	NA	NA
VOCs						
1,2-Dichloroethene	NV	NA	NA	NA	NA	NA
1,3-Dichlorobenzene	NV	NA	NA	NA	NA	NA
4-Methyl-2-pentanone	NV	NA	NA	NA	NA	NA
Acetone	NV	NA	NA	NA	NA	NA
Benzene	NV	NA	NA	NA	NA	NA
Carbon disulfide	NV	NA	NA	NA	NA	NA
Ethylbenzene	NV	NA	NA	NA	NA	NA
Methylene chloride	NV	NA	NA	NA	NA	NA
Tetrachloroethene	NV	NA	NA	NA	NA	NA

TABLE I-11: LOW TOXICITY REFERENCE VALUES FOR THE RED-TAILED HAWK (BUTEO JAMAICENSIS)

Ecological Risk Assessment for Sites 9, 13, 19, 22, and 23, Alameda Point, Alameda,

Ecological COPC	Literature-Based Low TRV (mg/kg-day)	Source of Study	Study	Endpoint	Body Weight of Study Subject (g)	Allometrically Converted Low TRV (mg/kg-day)
VOCs						
Toluene	NV	NA	NA	NA	NA	NA
Trichloroethene	NV	NA	NA	NA	NA	NA
Xylene	NV	NA	NA	NA	NA	NA

Notes:

a	Individual TRV not developed for antimony. Based on arsenic TRV.
b	TRV of these compounds based on 4,4'-DDT; individual TRV not developed.
c	DDTt TRV based on DDT; individual TRVs not developed.
d	PCB TRV based on Aroclor 1254; individual TRVs not developed.
e	HMW PAHs are defined as measured PAHs with a molecular weight greater than 200 a.u. and include: benzo(a)fluorene, fluoranthene, benzo(k)fluoranthene, benzo(b)fluoranthene, benzo(b)fluorene, benzo(g,h,i)perylene, chrysene, benzo(a)anthracene, dibenzo(a,h)anthracene, indeno(1,2,3-cd)pyrene, pyrene, and benzo(a)pyrene. TRV based on benzo(a)pyrene.
f	LMW PAHs are defined as measured PAHs with a molecular weight below 200 a.u., including naphthalene, fluorene, anthracene, phenanthrene, anthracene, and 2-methylnaphthalene. TRV based on naphthalene.
a.u.	Atomic unit
COPC	Chemical of potential concern
DDT	Dichlorodiphenyltrichloroethane
DDTt	Sum of concentrations of 4,4'-dichlorodiphenyldichloroethane, 4,4'-dichlorodiphenyldichloroethene, and 4,4'-dichlorodiphenyltrichloroethane
EPA	U.S. Environmental Protection Agency
g	Gram
HMW	High molecular weight
LMW	Low molecular weight
mg/kg-day	Milligram per kilogram per day
NA	Not applicable
Navy	U.S. Department of Navy
NOAEL	No observed adverse effects level
NV	No value available
PAH	Polynuclear aromatic hydrocarbon
PCB	Polychlorinated biphenyl
SVOC	Semivolatile organic chemical
TRV	Toxicity reference value
VOC	Volatile organic chemical

References:

Navy. 1998. "Interim Final Technical Memorandum, Development of Toxicity Reference Values for Conducting Ecological Risk Assessments at Naval Facilities in California." September.

Sample, B.E., D.M. Opresko, and G.W. Suter, II. 1996. "Toxicological Benchmarks for Wildlife: 1996 Revision." ES/ER/TM-86/R3. Oak Ridge National Laboratory. Oak Ridge, Tennessee.

TABLE I-12: ASSESSMENT AND ASSOCIATED MEASUREMENT ENDPOINTS

Ecological Risk Assessment for Sites 9, 13, 19, 22, and 23
Alameda Point, Alameda, California

Assessment Endpoint	Associated Measurement Endpoint
Sufficient Rates of Survival, Growth, and Reproduction to Sustain Small Mammal Populations Typical to the Area	Reproductive or physiological impacts to the California ground squirrel (*Citellus beecheyi*), as indicated by HQs developed based on both high (LOAEL-based) and low (NOAEL-based) TRVs
Sufficient Rates of Survival, Growth, and Reproduction to Sustain Passerine Populations Typical to the Area	Reproductive or physiological impacts to the Alameda song sparrow (*Melospiz melodia pusillula*) and the American robin (*Turdus migratorius*) as indicated by HQs developed based on both high (LOAEL-based) and low (NOAEL-based) TRVs
Sufficient Rates of Survival, Growth, and Reproduction to Sustain Raptor Populations Typical to the Area	Reproductive or physiological impacts to the red-tailed hawk (*Buteo jamaicensis*), as indicated by HQs developed based on both high (LOAEL-based) and low (NOAEL-based) TRVs

Notes:

HQ	Hazard quotient
LOAEL	Lowest observed adverse effects level
NOAEL	No observed adverse effects level
TRV	Toxicity reference value

TABLE I-13: PLANT AND INVERTEBRATE BIOCONCENTRATION FACTORS FOR ECOLOGICAL CHEMICALS OF POTENTIAL CONCERN AT OU-2A SITES

Ecological Risk Assessment for Sites 9, 13, 19, 22, and 23
Alameda Point, Alameda, California

Ecological COPC	$LogK_{ow}$	Soil to Soil Invertebrate BCFs[a]	Soil to Plant BCFs[a]
Metals			
Antimony	NA	0.22	0.2
Arsenic	NA	0.11	0.036
Barium	NA	0.22	0.15
Beryllium	NA	0.22	0.01
Cadmium	NA	0.96	0.364
Chromium	NA	0.01	0.0075
Copper	NA	0.04	0.4
Lead	NA	0.03	0.045
Mercury[b]	NA	1.1398	0.051
Selenium	NA	0.22	0.016
Zinc	NA	0.56	0.0000000000012
Pestides and PCBs			
Chlordane	5.16	1,202.40	0.04
DDTt	6.51	1.26	0.00937
Heptachlor epoxide[c]	5.4	1.4[e]	0.0489[e]
Total PCBs[d]	6.8	1.13[d]	0.01[d]
PAHs and SVOCs			
HMW and LMW PAHs[e]	5.6	0.063	0.00991
4-Chloro-3-methylphenol	3.1	24.7	0.626
Bis(2-ethylhexyl)phthalate	7.6	1,309	0.038
Carbazole	3.23	31.6	0.526
Diethylphthalate	2.47	7.53	1.45
Di-n-butyl phthalate	4.9	736.4	0.057
n-Nitroso-diphenylamine	3.13	26.15	0.601
Pentachlorophenol	5.12	1,034	0.0449
VOCs			
1,2-Dichloroethene	2	3.11	2.704
1,3-Dichlorobenzene	3.53	55.6	0.353
4-Methyl-2-pentanone	1.31	0.85	6.77
Acetone	-0.24	0.05	52
Benzene	2.13	3.97	2.27
Carbon disulfide	1.94	2.77	2.93
Ethylbenzene	3.15	27.2	0.585

TABLE I-13: PLANT AND INVERTEBRATE BIOCONCENTRATION FACTORS FOR ECOLOGICAL CHEMICALS OF POTENTIAL CONCERN AT OU-2A SITES (Continued)

Ecological Risk Assessment for Sites 9, 13, 19, 22, and 23
Alameda Point, Alameda, California

Ecological COPC	$LogK_{ow}$	Soil to Soil Invertebrate BCFs[a]	Soil to Plant BCFs[a]
VOCs (Continued)			
Methylene chloride	1.25	0.755	7.34
Tetrachloroethene	3.4	43.51	0.42
Toluene	2.73	12.3	1.02
Trichloroethene	2.61	9.81	1.2
Xylene	3.2	29.84	0.548

Notes:

a Based on values or regression equations presented by EPA (1999).

b Based on BCF for total mercury, which assumed 87 percent of detected mercury consisting of divalent mercury and 13 percent consisting of methylmercury (EPA 1999).

c Based on BCF for parent compound, heptachlor (EPA 1999).

d Based on BCF for Aroclor 1254 (EPA 1999).

e Based on the average of the BCFs presented in Tables C-1 and C-2 for PAHs presented by EPA (1999).

BCF Bioconcentration factor
COPC Chemical of potential concern
DDTt Sum of the concentrations of 4,4′-dichlorodiphenyldichloroethane, 4,4′-dichlorodiphenyldichloroethene, and 4,4′-dichlorodiphenyltrichloroethane
EPA U.S. Environmental Protection Agency
HMW High-molecular weight
K_{ow} Octanol-water partition coefficient
LMW Low-molecular weight
Log Lognormal
PAH Polynuclear aromatic hydrocarbon
PCB Polychlorinated biphenyl
SVOC Semivolatile organic chemical
VOC Volatile organic chemical

Reference:

EPA. 1999. "Screening Level Ecological Risk Assessment Protocol for Hazardous Waste Combustion Facilities." Solid Waste and Emergency Response. EPA530-D-99-001A. August.

TABLE I-14: CALCULATED BIOCONCENTRATION FACTORS FOR MAMMALS FOR ECOLOGICAL CHEMICALS OF POTENTIAL CONCERN

Ecological Risk Assessment for Sites 9, 13, 19, 22, and 23, Alameda Point, Alameda, California

Ecological COPC	Log K_{ow}	Ba_{mammal}[a] (day/kg)	$BCF_{soil\text{-}to\text{-}mammal}$[b] (unitless)	$BCF_{plant\text{-}to\text{-}mammal}$[b] (unitless)
Metals				
Antimony	NA	1.00E-03	1.99E-06	7.88E-05
Arsenic	NA	2.00E-03	3.98E-06	1.58E-04
Barium	NA	1.50E-04	2.99E-07	1.18E-05
Beryllium	NA	1.00E-03	1.99E-06	7.88E-05
Cadmium	NA	6.50E-06	1.29E-08	5.12E-07
Chromium	NA	5.50E-03	1.09E-05	4.33E-04
Copper	NA	1.00E-02	1.99E-05	7.88E-04
Lead	NA	3.00E-04	5.97E-07	2.36E-05
Mercury	NA	1.40E-02[c]	2.79E-05	1.10E-03
Selenium	NA	2.27E-03	4.52E-06	1.79E-04
Zinc	NA	9.00E-05	1.79E-07	7.09E-06
Pesticides and PCBs				
Chlordane	5.16	3.63E-03	7.22E-06	2.86E-04
DDTt[d]	6.51	2.04E-01	4.06E-04	1.61E-02
Heptachlor epoxide	5.4	6.31E-03	1.26E-05	4.97E-04
Total PCBs	6.8	1.59E-01	3.16E-04	1.25E-02
SVOCs				
HMW and LMW PAHs[e]	5.6	3.07E-02	6.11E-05	2.42E-03
4-Chloro-3-methylphenol	3.1	3.16E-05	6.29E-08	2.49E-06
Bis(2-ethylhexyl)phthalate	7.6	1.00E+00	1.99E-03	7.88E-02
Carbazole	3.23	4.27E-05	8.50E-08	3.36E-06
Diethylphthalate	2.47	7.41E-06	1.47E-08	5.84E-07
Di-n-butyl phthalate	4.9	2.00E-03	3.98E-06	1.58E-04
n-Nitroso-diphenylamine	3.13	3.39E-05	6.75E-08	2.67E-06
Pentachlorophenol	5.12	3.31E-03	6.59E-06	2.61E-04
VOCs				
1,2-Dichloroethene (Total)	2	2.51E-06	4.99E-09	1.98E-07
1,3-Dichlorobenzene	3.53	8.51E-05	1.69E-07	6.71E-06
4-Methyl-2-pentanone	1.31	5.13E-07	1.02E-09	4.04E-08
Acetone	-0.24	1.45E-08	2.89E-11	1.14E-09
Benzene	2.13	3.39E-06	6.75E-09	2.67E-07
Carbon Disulfide	1.94	2.19E-06	4.36E-09	1.73E-07
Ethylbenzene	3.15	3.55E-05	7.06E-08	2.80E-06
Methylene Chloride	1.25	4.47E-07	8.90E-10	3.52E-08
Tetrachloroethene	3.4	6.31E-05	1.26E-07	4.97E-06
Toluene	2.73	1.35E-05	2.69E-08	1.06E-06
Trichloroethene	2.61	1.02E-05	2.03E-08	8.04E-07
Xylene	3.2	3.98E-05	7.92E-08	3.14E-06

TABLE I-14: CALCULATED BIOCONCENTRATION FACTORS FOR MAMMALS FOR ECOLOGICAL CHEMICALS OF POTENTIAL CONCERN

Ecological Risk Assessment for Sites 9, 13, 19, 22, and 23, Alameda Point, Alameda, California

Notes:

a	For metals, the Bamammal value was presented in EPA 1998, unless noted otherwise. For organics, Ba_{mammal} values were calculated using the correlation equation derived by Travis and Arms (1984).
b	Calculated by multiplying the Bamammal by the soil and plant ingestion rate for the California ground squireel of 0.00199 kg/day-DW and 0.07879 kg/day-FW, respectively (EPA 1999).
c	Default Bamammal value of 0.02 kg/day-DW for total mercury, presented in EPA 1997, was used and converted to FW by assuming 70-percent moisture in mammals (EPA 1999).
d	Based on log Kow for 4,4-Dichlorodiphenyltrichloroethane
e	Based on the average of the Ba_{mammal} values presented in Tables C-1 and C-2 FOR PAHs presented by EPA (1999).
Ba_{mammal}	Biotransfer factor for mammals
$BCF_{plant\text{-}to\text{-}mammal}$	Bioconcentration factor from plant food item to mammals
$BCF_{soil\text{-}to\text{-}mammal}$	Bioconcentration factor from incidental soil ingestion to mammals
COPC	Chemical of potential concern
day/kg	Day per kilogram
DDTt	Sum of the concentrations of 4,4'-dichlorodiphenyldichloroethane, 4,4'-dichlorodiphenyldichloroethene, and 4,4'-dichlorodiphenyltrichloroethane
DW	Dry weight
EPA	U.S. Environmental Protection Agency
FW	Fresh weight
HMW	High molecular weight
kg/day	Kilogram per day
Kow	Octanol-water partition coefficient
LMW	Low molecular weight
Log	Lognormal
NA	Not applicable
ORD	Office of Research and Development
PAH	Polynuclear aromatic hydrocarbon
PCB	Polychlorinated biphenyl
SVOC	Semivolatile organic chemical
VOC	Volatile organic chemical

References:

EPA. 1999. Screening Level Ecological Risk Assessment Protocol for Hazardous Waste Combustion Facilities. Solid Waste and Emergency Response. EPA530-D-99-001A. August.

EPA. 1998. Human Health Risk Assessment Protocol for Hazardous Waste Combustion Facilities. Solid Waste and Emergency Response. EPA530-D-98-001A. July.

EPA. 1997. Mercury Study Report to Congress, Volumes I through VIII. Office of Air Quality Planning and Standards and ORD. EPA/452/R-97-001. December.

Travis, C.C. and A.D. Arms. 1984. "Bioconcentration of Organics in Beef, Milk, and Vegetation." *Environmental Science and Technology.* Volume 22. Pages 271-274.

TABLE I-15: FOOD-CHAIN MULTIPLIERS BY TROPHIC LEVEL FOR ECOLOGICAL CONSTITUENTS OF POTENTIAL CONCERN

Ecological Risk Assessment for Sites 9, 13, 19, 22, and 23, Alameda Point, Alameda, California

Ecological COPC	Log K_{ow}	Food-Chain Multiplier[a] Trophic Level of Consumer		
		2	3	4
Metals[b]				
Antimony	NA	1	1	1
Arsenic	NA	1	1	1
Barium	NA	1	1	1
Beryllium	NA	1	1	1
Cadmium	NA	1	1	1
Chromium	NA	1	1	1
Copper	NA	1	1	1
Lead	NA	1	1	1
Mercury	NA	1	1	1
Selenium	NA	1	1	1
Zinc	NA	1	1	1
Pesticides and PCBs				
Chlordane	5.16	1	4.2	3.9
DDTt	6.91	1	14	27
Heptachlor epoxide	5.4	1	5.5	5.8
Total PCBs	6.8	1	14	27
SVOCs				
HMW and LMW PAH[a]	5.6	1	7.1	8.6
4-Chloro-3-methylphenol	3.1	1	1	1
Bis(2-ethylhexyl)phthalate	7.6	1	12	17
Carbazole	3.23	1	1	1
Diethylphthalate	2.47	1	1	1
Di-n-butyl phthalate	4.9	1	2.8	2.2
n-Nitroso-diphenylamine	3.13	1	1	1
Pentachlorophenol	5.12	1	3.6	3.2
VOCs				
1,2-Dichloroethene (Total)	2	1	1	1
1,3-Dichlorobenzene	3.53	1	1.1	1
4-Methyl-2-pentanone	1.31	1	1	1
Acetone	-0.24	1	1	1
Benzene	2.13	1	1	1
Carbon Disulfide	1.94	1	1	1
Ethylbenzene	3.15	1	1	1
Methylene Chloride	1.25	1	1	1
Tetrachloroethene	3.4	1	1.1	1
Toluene	2.73	1	1	1
Trichloroethene	2.61	1	1	1
Xylene	3.2	1	1	1

TABLE I-15: FOOD-CHAIN MULTIPLIERS BY TROPHIC LEVEL FOR ECOLOGICAL CONSTITUENTS OF POTENTIAL CONCERN

Ecological Risk Assessment for Sites 9, 13, 19, 22, and 23, Alameda Point, Alameda, California

Notes:

a	Obtained from EPA 1999
b	Since FCMs are based on LogKow value of chemical, FCMs were not presented for metals. Assumed a FCM of 1.
COPC	Chemical of potential concern
DDTt	Sum of the concentrations of 4,4'-dichlorodiphenyldichloroethane, 4,4'-dichlorodiphenyldichloroethene, and 4,4'-dichlorodiphenyltrichloroethane
EPA	U.S. Environmental Protection Agency
FCM	Food-chain multiplier
HMW	High molecular weight
LMW	Low molecular weight
Kow	Octanol-water partition coefficient
Log	Lognormal
NA	Not applicable
PAH	Polynuclear aromatic hydrocarbon
PCB	Polychlorinated biphenyl
SVOC	Semivolatile organic chemical
VOC	Volatile organic chemical

References:

EPA. 1999. "Screening Level Ecological Risk Assessment Protocol for Hazardous Waste Combustion Facilities." Solid Waste and Emergency Response. EPA30-D-99-001A. August.

TABLE I-16: VALUES FOR EXPOSURE FACTORS FOR MEASUREMENT ENDPOINT RECEPTORS

Ecological Risk Assessment for Sites 6, 7, 8, and 16, Alameda Point, Alameda, California

Exposure Parameters	Abbreviation	Units	California Ground Squirrel	Alameda Song Sparrow	American Robin	Red-tailed Hawk
Daily Food Ingestion Rate[a]	Total Food IR	kg/day-FW	0.0984	0.01498	0.03511	0.327
		kg/day-DW	0.03161	0.00486	0.01267	0.0898
Incidental Soil Ingestion Rate[b]	Soil IR	kg/day-DW	0.00199	0.000457	0.0012	0.00063
Plant Percentage of Diet[c]	Plant Percent	percent	80%	50%	50%	--
Plant Ingestion Rate[c]	Plant IR	kg/day-FW	0.07879	0.00749	0.0176	--
Invertebrate Percentage of Diet[d]	Invertebrate Percent	percent	20%	50%	50%	--
Invertebrate Ingestion Rate[d]	Invert IR	kg/day-FW	0.0197	0.00749	0.0176	--
Vertebrate Percentage of Diet[e]	Vertebrate Percent	percent	--	--	--	100%
Vertebrate Ingestion Rate[e]	Vert IR	kg/day-FW	--	--	--	0.327
Site Use Factor[f]	SUF	unitless	1.00	1.00	1.00	1.00
Body Weight[g]	BW	kg	0.562	0.0199	0.081	1.13

Notes:

a Based on the formula presented by Nagy (2001). DW and FW both calculated since wildlife tissues assessed on a FW basis and soil is assessed on a DW basis.

b For California ground squirrel, based on estimated percent soil in diet of jack rabbits, 6.3 percent, multiplied by the total IR (Arthur and Gates [1988], as cited in EPA 1993); for Alameda song sparrow, based on sediment consumption by wild turkey (9.4 percent of total IR) (Beyer and others 1994); and for red-tailed hawk, based on estimated percent soil in diet of bald eagles, 0.7 percent (Beyer and others 1994), multiplied by the total food IR for dry matter intake (Nagy 2001).

c For California ground squirrel, plant IR based on 80 percent of net food IR (California Wildlife Exposure Factor and Toxicity Database 2000); for Alameda song sparrow and American robin, plant IR baed on 50 percent of net food IR (EPA 1993).

d For California ground squirrel, invertebrate IR based on 20 percent of net food IR (California Wildlife Exposure Factor and Toxicity Database 2000); for Alameda song sparrow and American robin, invertebrate IR based on 50 percent of net food IR (EPA 1993).

e Vertebrate IRs for the red-tailed hawk calculated based upon 100 percent of the net food IR.

f Site use factor based upon the conservative estimate of 100 percent use of all receptors at all times.

g For the California ground squirrel, based on the average female body weight (Holecamp and Nunes 1989); for the Alameda song sparrow, based on the mean value for male and female adults during nesting, post-nesting, and winter (Dunning 1993); for the American robin, based on the average body weight of an adult robin; for the red-tailed hawk, based on the average body weight of an adult red-tailed hawk.

-- This exposure parameter is not applicable to this receptor.

EPA U.S. Environmental Protection Agency

FW Fresh weight

DW Dry weight

IR Ingestion rate

kg Kilogram

kg/day Kilogram per day

References:

Beyer, W.N., G.H. Heinz, and A.W. Redmon-Norwood. 1996. *Environmental Contaminants in Wildlife: Interpreting Tissue Concentrations.* CRC Press, Inc. Boca Raton, Flo

California EPA. 2000. California Wildlife Exposure Factor and Toxicity Database. Office of Environmental Health Hazard Assessment. Online address: http://www.oehha.org/cal_ecotox/

Dunning, J.B. 1993. *CRC Handbook of Avian Body Masses.* CRC Press. Boca Raton, Florida.

EPA. 1993. *Wildlife Exposure Factors Handbook.* " Volumes 1 and 2. EPA 600/R-93/187a. December.

Holecamp, K.E., and S. Nunes. 1989. "Seasonal Variation in Body Weight, Fat, and Behaviour of California Ground Squirrels (*Spermophilus beecheyi*)." *California Journal of Zoology.* Volume 67, No. 6. Pages 1,425 through 1,433.

Nagy, K.A. 2001. "Food Requirements of Wild Animals: Predictive Equations for Free-Living Mammals, Reptiles and Birds." *Nutrition Abstracts and Reviews* . Series B71, 21R-31R.

TABLE I-17: SURFACE SOIL BACKGROUND STATISTICS

Ecological Risk Assessment for Sites 9, 13, 19, 22, and 23, Alameda Point, Alameda, California

Chemical	Frequency of Detection	Minimum Concentration (mg/kg)	Maximum Concentration (mg/kg)	Median Concentration (mg/kg)	Mean Concentration (mg/kg)	UCL95[a] (mg/kg)
Metals						
Aluminum[b]	88/88	2,880	26,800	4,965	6,417.49	7,073.7
Antimony[c]	2/88	0.89	1	2.4	2.16	2.9
Arsenic[c]	33/88	0.74	23	2.9	4.59	6.39
Barium[b]	85/88	0.3	198	38.75	53.01	63.26
Beryllium[c]	25/88	0.09	0.77	0.3	0.37	0.49
Cadmium[c]	29/88	0.1	0.82	0.3	0.4	0.49
Calcium[b]	88/88	1,360	19,200	2,600	3,683.74	4,201.93
Chromium[b]	66/88	11.4	81.7	29.5	33.5	35.74
Cobalt[d]	66/88	1.9	14	5.35	5.37	6.45
Copper[b]	83/88	4.2	89.4	9.7	13.12	15.23
Iron[b]	88/88	760	26,900	8,140	10,072.09	11,092.99
Lead[c]	27/88	1.3	41	5.9	5.31	7.54
Magnesium[b]	88/88	1,510	42,400	2,240	2,867.67	3,156.01
Manganese[b]	88/88	50	1,060	108.5	143.63	159.52
Mercury[c]	0/22	NC	NC	0.17	NC	NC
Molybdenum[c]	0/85	NC	NC	1.4	NC	NC
Nickel[b]	88/88	11.6	88.5	24	29.17	31.64
Potassium[b]	87/88	310	6,382	770	902.98	996.73
Selenium[c]	1/88	5.7	5.7	5	4.05	4.67
Silver[c]	2/88	0.44	0.61	0.7	1.07	1.88
Sodium[b]	68/88	88.1	3,510	340	422.62	718.2
Thallium[c]	1/88	5.3	5.3	3.1	3.2	4.16
Titanium[d]	66/66	223	1,020	372.5	407.1	436.76
Vanadium[b]	88/88	12.8	62.3	20	22.23	23.68
Zinc[b]	88/88	14	84	24.85	28.55	30.93

Notes:

a	The UCL95 may be less than the minimum detected concentration or exceed the maximum detected concentration, because one-half of the quantitation limit was used as a proxy value for non-detected results. The UCL95 was calculated using a distribution-dependent formula.
b	Distribution assumed to be lognormal based on examination of probability plots and outlier box plots
c	Distribution not tested.
d	Distribution determined to be lognormal
mg/kg	Milligram per kilogram
NC	Not calculated, detection of frequency lower than 50 percent
UCL95	95th percentile upper confidence limit on the arithmetic mean

TABLE I-18: SURFACE SOIL BACKGROUND HAZARD QUOTIENT BY MEASUREMENT ENDPOINT

Ecological Risk Assessment for Sites 9, 13, 19, 22, and 23, Alameda Point, Alameda, California

	MEASUREMENT ENDPOINTS							
	Reproductive or Physiological Impacts to the California Ground Squirrel		Reproductive or Physiological Impacts to the Alameda Song Sparrow		Reproductive or Physiological Impacts to the American Robin		Reproductive or Physiological Impacts to the Red-tailed Hawk	
	HAZARD QUOTIENT							
Ecological COPC	**High TRV**	**Low TRV**	**High TRV**	**Low TRV**	**High TRV**	**Low TRV**	**High TRV**	**Low TRV**
Antimony	1.70E-03[a]	7.63E-01[a]	3.42E-02[b]	1.37E-01[b]	1.52E-02[b]	6.10E-02[b]	1.77E-03[b]	7.06E-03[b]
Arsenic	1.20E-02[a]	1.65E-01[a]	4.33E-02[b]	1.74E-01[b]	1.96E-02[b]	7.86E-02[b]	2.03E-03[b]	8.10E-03[b]
Barium	4.54E-02[a]	1.74E-01[a]	2.45E-01[b]	4.91E-01[b]	1.09E-01[b]	2.19E-01[b]	1.29E-02[b]	2.59E-02[b]
Beryllium	8.72E-04[a]	8.72E-03[a]	NV	NV	NV	NV	NV	NV
Cadmium	4.36E-03[b]	1.91E-01[b]	4.16E-03[a]	8.51E-01[a]	1.87E-03[a]	3.85E-01[a]	1.57E-03[a]	3.20E-01[a]
Chromium	1.12E-02[a]	4.50E-02[a]	4.44E-01[b]	2.21E+00[b]	2.12E-01[b]	1.06E+00[b]	8.31E-03[b]	4.16E-02[b]
Copper	3.40E-04[a]	7.95E-02[a]	2.99E-02[a]	7.43E-01[a]	1.37E-02[a]	3.40E-01[a]	6.86E-04[a]	1.70E-02[a]
Lead	2.06E-04[a]	4.28E-02[a]	6.55E-02[b]	2.71E+01[b]	3.07E-02[b]	1.27E+01[b]	1.84E-03[b]	7.65E-01[b]
Lead, alternate TRV[c]	NA	NA	NA	1.03E-01[b]	NA	4.84E-02[b]	NA	2.92E-03[b]
Mercury	ND	ND	ND	ND	ND	ND	ND	ND
Selenium	5.32E-02[b]	1.30E+00[a]	1.20E+00[b]	4.83E+00[b]	5.33E-01[b]	2.16E+00[b]	6.65E-02[b]	2.69E-01[b]
Zinc	1.87E-03[b]	8.98E-02	9.12E-02[a]	9.12E-01[a]	4.01E-02[a]	4.01E-01[a]	5.73E-03[a]	5.23E-02[a]

Notes:

a	TRV based on an physiological effect
b	TRV based on an reproductive effect
c	The Navy established avian low TRV of 0.014 mg/kg-day is considered highly conservative. For comparison purposes an alternate, less conservative, low TRV of 3.85 mg/kg-day, as referenced by Sample and others (1996), was used.

COPC	Chemical of potential concern
HQ	Hazard quotient
mg/kg-day	Milligram per kilogram per day
NA	Not applicable
ND	Not detected in background samples
NV	Reference value not available, HQ could not be calculated
TRV	Toxicity reference value

Reference:

Sample, B.E., D.M. Opresko, and G.W. Suter, II. 1996. "Toxicological Benchmarks for Wildlife: 1996 Revision." ES/ER/TM-86/R3. Oak Ridge National Laboratory. Oak Ridge, Tennessee.

TABLE I-19: SITE 9 SURFACE SOIL DETECTED CONSTITUENT SCREENING-- SELECTION OF ECOLOGICAL CHEMICALS OF POTENTIAL CONCERN

Ecological Risk Assessment for Sites 9, 13, 19, 22, and 23

Chemical	Frequency of Detection	Sample Quantitation Limit	Minimum Concentration	Maximum Concentration	EPC[a]	Screening Evaluation	
						Rejected	Retained
Metals (mg/kg)							
Aluminum[b]	26/26	NA	2,890	11,900	4,785.49	CSB	
Antimony[c]	1/26	0.46 - 6.4	0.47	0.47	0.47	FOD	
Arsenic[c]	8/26	0.52 - 11	0.85	5.9	3.3	CSB	
Barium[d]	26/26	NA	16.3	266	84.32		X
Beryllium[b]	17/26	0.2 - 1.1	0.09	1.2	0.8		X
Cadmium[c]	9/26	0.06 - 1.1	0.11	0.49	0.32	CSB	
Chromium[b]	26/26	NA	22	178	45.87		X
Cobalt[c]	12/26	0.8 - 5.3	3.4	23	6.4	CSB	
Copper[b]	23/26	0.4 - 5.3	4.1	89.4	16.94	CSB	
Iron[e]	26/26	NA	5,480	19,300	8,725.68	EN	
Lead[b]	15/26	0.24 - 5.4	1.3	9.1	5.2		X
Manganese[b]	26/26	NA	68	1,050	137.07	CSB	
Nickel[d]	26/26	NA	17	46.1	24.12	CSB	
Titanium[b]	12/12	0.2 - 5.3	223	1,020	450.67	CSB	
Vanadium[b]	26/26	NA	13	35.4	20.27	CSB	
Zinc[b]	26/26	NA	15.7	80.6	28.34	CSB	
SVOCs (mg/kg)							
2-Methylnaphthalene[c]	18/39	0.00022 - 0.0042	0.00023	1.5	0.22		X
Acenaphthene[c]	5/39	0.00022 - 0.0063	0.00045	0.14	0.022		X
Acenaphthylene[c]	6/39	0.00017 - 0.0068	0.00021	0.0029	0.003		X
Anthracene[c]	14/39	0.0002 - 0.0058	0.00023	0.043	0.009		X
Benzo(a)anthracene[b]	24/39	0.00014 - 0.0095	0.00018	0.019	0.0104		X
Benzo(a)pyrene[f]	28/39	0.00015 - 0.0074	0.00021	0.039	0.0111		X
Benzo(b)fluoranthene[b]	26/39	0.00015 - 0.0068	0.00021	0.054	0.015		X
Benzo(g,h,i)perylene[f]	32/39	0.00011 - 0.0079	0.00014	0.11	0.042		X
Benzo(k)fluoranthene[b]	20/39	0.00016 - 0.0095	0.00021	0.011	0.008		X
Chrysene[b]	26/39	0.00016 - 0.0089	0.00021	0.15	0.028		X
Dibenzo(a,h)anthracene[c]	17/39	0.00019 - 0.0074	0.00033	0.034	0.0092		X
Fluoranthene[f]	27/39	0.00018 - 0.01	0.0003	0.051	0.0133		X
Fluorene[c]	13/39	0.00018 - 0.005	0.00023	0.38	0.055		X
Indeno(1,2,3-cd)pyrene[b]	25/39	0.00016 - 0.0105	0.00023	0.016	0.0094		X
Naphthalene[c]	16/39	0.00022 - 0.005	0.00025	0.49	0.093		X
n-Nitroso-diphenylamine[c]	4/13	0.34 - 0.73	0.038	0.054	0.054		X
Pentachlorophenol[c]	1/13	1.6 - 3.5	0.43	0.43	0.43		X
Phenanthrene[b]	30/39	0.00016 - 0.0089	0.00017	0.64	0.035		X
Pyrene[f]	30/39	0.00012 - 0.0084	0.00014	0.11	0.0182		X
VOCs (mg/kg)							
1,2-Dichloroethene (Total)[c]	2/21	0.005 - 0.12	0.001	0.13	0.034		X
2-Butanone[c]	1/21	0.01 - 0.12	0.009	0.009	0.009	FOD - NB	
Ethylbenzene[c]	1/21	0.005 - 0.12	0.2	0.2	0.042		X
Tetrachloroethene[c]	1/21	0.005 - 0.12	0.001	0.001	0.001		X
Toluene[c]	9/21	0.005 - 0.12	0.004	0.73	0.12		X
Xylene (Total)[c]	5/21	0.005 - 0.12	0.002	3.1	0.43		X

TABLE I-19: SITE 9 SURFACE SOIL DETECTED CONSTITUENT SCREENING-- SELECTION OF ECOLOGICAL CHEMICALS OF POTENTIAL CONCERN

Ecological Risk Assessment for Sites 9, 13, 19, 22, and 23

Notes:

a	The EPC is the lesser of the UCL95 and the maximum detected concentration. The maximum detected concentration is used for all samples with fewer than three detected measurements.
b	Distribution determined to be unknown but assumed to be lognormal based on examination of probability plots and outlier box plots.
c	Distribution not tested.
d	Distribution determined to be unknown but assumed to be normal based on examination of probability plots and outlier box plots.
e	Distribution determined to be normal.
f	Distribution determined to be lognormal.
CSB	Concentrations within statistical background
EN	Essential nutrient
EPC	Exposure point concentration
FOD	Frequency of detection five percent or lower
mg/kg	Millogram per kilogram
NA	Not applicable, frequency of detection is 100 percent
NB	Non-bioaccumulating
SVOC	Semivolatile organic chemical
UCL95	95th percentile upper confidence limit on the arithmetic mean
VOC	Volatile organic chemical

TABLE I-20: SITE 13 SURFACE SOIL DETECTED CONSTITUENT SCREENING--SELECTION OF ECOLOGICAL CHEMICALS OF POTENTIAL CONCERN

Ecological Risk Assessment for Sites 9, 13, 19, 22, and 23, Alameda Point,

Chemical	Frequency of Detection	Sample Quantitation Limit	Minimum Concentration	Maximum Concentration	EPC[a]	Screening Evaluation Rejected	Screening Evaluation Retained
Metals (mg/kg)							
Aluminum[b]	73/73	NA	45.8	18,200	8,862.85	CSB	
Antimony[c]	18/75	0.45 - 7.5	0.37	8.2	2.43		X
Arsenic[b]	43/75	0 - 12	1.2	20	6.68		X
Barium[b]	71/75	0 - 25	11.6	376	62.81	CSB	
Beryllium[c]	20/75	0.05 - 1.2	0.13	1.9	0.49	CSB	
Cadmium[c]	32/75	0 - 2.4	0.05	18	1.09	CSB	
Chromium[b]	75/75	NA	3.6	337	34.75	CSB	
Cobalt[b]	56/75	0 - 6.3	2	15.2	6.53	CSB	
Copper[b]	65/75	0 - 6.3	3.9	160	17.32	CSB	
Iron[b]	73/73	NA	2,790	74,800	10,981.69	EN	
Lead[b]	54/81	0 - 47.2	1	602	83.59		X
Manganese[b]	73/73	NA	22.6	702	164.64	CSB	
Mercury[c]	8/37	0.01 - 0.19	0.01	0.4	0.12		X
Molybdenum[c]	1/75	0.15 - 6.3	5.9	5.9	1.85	FOD	
Nickel[d]	73/75	0 - 6.3	2.6	278	35.68	CSB	
Selenium[c]	14/75	0 - 12	0.14	12	3.27		X
Silver[c]	3/75	0.14 - 6.3	0.23	1.6	1.29	FOD	
Thallium[c]	1/75	0.11 - 12	2.7	2.7	2.7	FOD	
Titanium[b]	38/38	NA	209	632	401.11	CSB	
Vanadium[e]	75/75	NA	6.8	76.8	23.85	CSB	
Zinc[e]	75/75	NA	7	7,120	300.45		X
Pesticides (mg/kg)							
4,4'-DDE[c]	2/38	0.0021 - 0.16	0.0037	0.031	0.018		X
4,4'-DDT[c]	3/38	0.0021 - 0.16	0.0021	0.16	0.03		X
Heptachlor Epoxide[c]	1/35	0.001 - 0.082	0.0054	0.0054	0.0054		X
SVOCs (mg/kg)							
2-Methylnaphthalene[c]	112/243	0.00021 - 0.191	0.00025	39	1.03		X
2,4-Dimethylphenol[c]	1/54	0 - 34	0.14	0.14	0.14	FOD - NB	
Acenaphthene[c]	42/243	0.00021 - 0.057	0.00026	0.77	0.036		X
Acenaphthylene[c]	65/243	0.00016 - 0.062	0.00018	0.87	0.039		X
Anthracene[c]	88/243	0.00019 - 0.052	0.00025	12	0.282		X
Benzo(a)anthracene[b]	142/243	0.00013 - 0.086	0.00014	3.4	0.146		X
Benzo(a)pyrene[b]	135/243	0.00014 - 0.067	0.00021	2.4	0.131		X
Benzo(b)fluoranthene[b]	133/243	0.00014 - 0.062	0.00023	1.6	0.123		X
Benzo(g,h,i)perylene[b]	143/243	0.0001 - 0.072	0.00035	1.5	0.14		X
Benzo(k)fluoranthene[c]	107/243	0.00015 - 0.086	0.00023	1.4	0.068		X
Carbazole[c]	2/14	0 - 3.6	0.13	0.27	0.27		X
Chrysene[b]	146/243	0.00015 - 0.081	0.00016	4.6	0.25		X
Dibenzo(a,h)anthracene[c]	94/243	0.00018 - 0.067	0.00034	1.3	0.051		X
di-n-Butylphthalate[c]	1/54	0.33 - 34	0.031	0.031	0.031		X
Fluoranthene[b]	135/243	0.00017 - 0.091	0.00019	1.9	0.124		X
Fluorene[c]	71/243	0.00017 - 0.048	0.00021	9.1	0.246		X
Indeno(1,2,3-cd)pyrene[c]	107/243	0.00015 - 0.095	0.00028	1.6	0.068		X
Naphthalene[c]	95/243	0.00021 - 0.048	0.00026	6.4	0.232		X
n-Nitroso-diphenylamine[c]	12/53	0.33 - 34	0.042	1.2	1.2		X
Pentachlorophenol[c]	3/54	0.87 - 170	0.27	1	1		X
SVOCs (Continued) (mg/kg)							
Phenanthrene[b]	136/243	0.00015 - 0.081	0.00022	9.6	0.181		X
Pyrene[b]	133/243	0.00011 - 0.076	0.0002	2.7	0.159		X

TABLE I-20: SITE 13 SURFACE SOIL DETECTED CONSTITUENT SCREENING--SELECTION OF ECOLOGICAL CHEMICALS OF POTENTIAL CONCERN

Ecological Risk Assessment for Sites 9, 13, 19, 22, and 23, Alameda Point,

Chemical	Frequency of Detection	Sample Quantitation Limit	Minimum Concentration	Maximum Concentration	EPC[a]	Screening Evaluation	
						Rejected	Retained
VOCs (mg/kg)							
Acetone[c]	3/43	0.005 - 1.3	0.15	0.19	0.103		X
Benzene[c]	9/48	0 - 0.63	0.001	0.082	0.04		X
Carbon Disulfide[c]	3/43	0.005 - 0.63	0.001	0.002	0.002		X
Ethylbenzene[c]	12/48	0 - 0.63	0.00069	0.56	0.065		X
Toluene[f]	26/48	0 - 0.63	0.001	1.6	0.22		X
Xylene (Total)[c]	13/48	0 - 0.63	0.0011	2.9	0.3		X

Notes:

a	The EPC is the lesser of the UCL95 and the maximum detected concentration. The maximum detected concentration is used for all samples with fewer than three detected measurements.
b	Distribution determined to be unknown but assumed to be lognormal based on examination of probability plots and outlier box plots.
c	Distribution not tested.
d	Distribution determined to be normal.
e	Distribution determined to be unknown but assumed to be normal based on examination of probability plots and outlier box plots.
f	Distribution determined to be lognormal.
CSB	Concentrations within statistical background
DDE	Dichlorodiphenyldichloroethene
DDT	Dichlorodiphenyltrichloroethane
EN	Essential nutrient
EPC	Exposure point concentration
FOD	Frequency of detection five percent or lower
mg/kg	Millogram per kilogram
NA	Not applicable, frequency of detection is 100 percent
NB	Non-bioaccumulating
SVOC	Semivolatile organic chemical
UCL95	95th percentile upper confidence limit on the arithmetic mean
VOC	Volatile organic chemical

TABLE I-21: SITE 19 SURFACE SOIL DETECTED CONSTITUENT SCREENING--SELECTION OF ECOLOGICAL CHEMICALS OF POTENTIAL CONCERN

Ecological Risk Assessment for Sites 9, 13, 19, 22, and 23, Alameda Point,

Chemical	Frequency of Detection	Sample Quantitation Limit	Minimum Concentration	Maximum Concentration	EPC[a]	Screening Evaluation	
						Rejected	Retained
Metals (mg/kg)							
Aluminum[b]	24/24	NA	2,840	10,900	6,140.13	CSB	
Arsenic[c]	3/24	2.5 - 13	3.1	9.5	6.63	CSB	
Barium[d]	21/24	0.2 - 26	15.3	570	109.56		X
Beryllium[c]	3/24	0.13 - 1.3	0.37	0.4	0.4	CSB	
Cadmium[c]	7/24	0.2 - 1.3	0.2	7.4	1.36	CSB	
Chromium[b]	24/24	NA	5.8	67	32.46	CSB	
Cobalt[c]	9/24	0.8 - 6.4	3.4	9.7	4.98	CSB	
Copper[b]	21/24	0.6 - 6.4	5.9	138	51.58		X
Iron[b]	24/24	NA	4,670	32,300	12,861.46	EN	
Lead[c]	8/24	3.5 - 6.4	6.6	303	41.18		X
Manganese[d]	24/24	NA	72	897	274.35	CSB	
Molybdenum[c]	1/24	0.31 - 6.4	1.6	1.6	1.6	FOD	
Nickel[e]	24/24	NA	5.5	64	29.52	CSB	
Silver[c]	2/24	0.38 - 6.4	0.43	0.7	0.7	CSB	
Thallium[c]	1/24	2.7 - 13	3.3	3.3	3.3	FOD	
Titanium[e]	24/24	NA	220	819	470.28	CSB	
Vanadium[b]	24/24	NA	12	41.5	22.48	CSB	
Zinc[e]	24/24	NA	14	292	64.64		X
Cyanide[c]	1/32	0.5 - 1.3	0.59	0.59	0.56	FOD	
SVOCs (mg/kg)							
2-Chlorophenol[c]	1/28	0.34 - 11	1.5	1.5	0.95	FOD - NB	
2-Methylnaphthalene[b]	20/39	0.00022 - 0.008	0.00026	0.0061	0.0061		X
4-Chloro-3-Methylphenol[b]	1/28	0.34 - 11	1.5	1.5	0.95		X
Acenaphthene[c]	7/39	0.00022 - 0.012	0.0003	0.0018	0.0018		X
Acenaphthylene[b]	21/39	0.00017 - 0.013	0.0002	0.019	0.0173		X
Anthracene[b]	23/39	0.0002 - 0.011	0.00027	0.047	0.0137		X
Benzo(a)anthracene[e]	32/39	0.00014 - 0.019	0.00024	0.32	0.04		X
Benzo(a)pyrene[e]	31/39	0.00015 - 0.014	0.00023	0.52	0.043		X
Benzo(b)fluoranthene[e]	32/39	0.00015 - 0.013	0.00034	0.28	0.035		X
Benzo(g,h,i)perylene[e]	35/39	0.00011 - 0.016	0.0002	0.4	0.072		X
Benzo(k)fluoranthene[e]	26/39	0.00016 - 0.019	0.0002	0.33	0.035		X
Bis(2-ethylhexyl)phthalate[c]	2/28	0.34 - 11	0.11	0.89	0.89		X
Chrysene[e]	36/39	0.00016 - 0.018	0.00021	0.42	0.036		X
Dibenzo(a,h)anthracene[c]	19/39	0.00019 - 0.014	0.0003	0.04	0.013		X
Diethylphthalate[c]	2/28	0.34 - 11	6.2	7.7	2.11		X
Di-n-Butylphthalate[c]	1/28	0.34 - 11	7.3	7.3	1.92		X
Fluoranthene[e]	36/39	0.00018 - 0.02	0.00035	0.64	0.043		X
Fluorene[c]	15/39	0.00018 - 0.01	0.00019	0.00064	0.0064		X
Indeno(1,2,3-cd)pyrene[e]	33/39	0.00016 - 0.021	0.00029	0.47	0.047		X
Naphthalene[b]	31/39	0.00022 - 0.01	0.00027	0.025	0.009		X
n-Nitroso-diphenylamine[c]	7/28	0.34 - 11	0.048	0.9	0.9		X
Pentachlorophenol[c]	3/28	0.84 - 33	0.41	1.6	1.6		X
Phenanthrene[e]	31/39	0.00016 - 0.018	0.00037	0.17	0.026		X
Pyrene[e]	37/39	0.00012 - 0.017	0.00024	0.71	0.048		X

TABLE I-21: SITE 19 SURFACE SOIL DETECTED CONSTITUENT SCREENING--SELECTION OF ECOLOGICAL CHEMICALS OF POTENTIAL CONCERN

Ecological Risk Assessment for Sites 9, 13, 19, 22, and 23, Alameda Point,

Chemical	Frequency of Detection	Sample Quantitation Limit	Minimum Concentration	Maximum Concentration	EPC[a]	Screening Evaluation	
						Rejected	Retained
VOCs (mg/kg)							
1,3-Dichlorobenzene[c]	1/9	0.005 - 0.52	0.59	0.59	0.29		X
Acetone[c]	2/19	0.01 - 1.4	0.004	0.007	0.007		X
Methylene Chloride[c]	2/19	0.005 - 1.4	0.011	0.03	0.03		X
Tetrachloroethene[c]	1/20	0.005 - 0.68	0.004	0.004	0.004		X
Toluene[c]	15/20	0.005 - 0.68	0.002	1	0.292		X
Trichloroethene[c]	1/20	0.005 - 0.68	0.004	0.004	0.004		X
Xylene[c]	3/20	0.005 - 0.68	0.003	0.19	0.031		X

Notes:

a	The EPC is the lesser of the UCL95 and the maximum detected concentration. The maximum detected concentration is used for all samples with fewer than three detected measurements.
b	Distribution determined to be unknown but assumed to be lognormal based on examination of probability plots and outlier box plots.
c	Distribution not tested.
d	Distribution determined to be normal.
e	Distribution determined to be unknown but assumed to be normal based on examination of probability plots and outlier box plots.
f	Distribution determined to be lognormal.
CSB	Concentrations within statistical background
EN	Essential nutrient
EPC	Exposure point concentration
FOD	Frequency of detection five percent or lower
mg/kg	Millogram per kilogram
NA	Not applicable, frequency of detection is 100 percent
NB	Non-bioaccumulating
SVOC	Semivolatile organic chemical
UCL95	95th percentile upper confidence limit on the arithmetic mean
VOC	Volatile organic chemical

TABLE I-22: SITE 22 SURFACE SOIL DETECTED CONSTITUENT SCREENING--SELECTION OF ECOLOGICAL CHEMICALS OF POTENTIAL CONCERN

Ecological Risk Assessment for Sites 9, 13, 19, 22, and 23, Alameda Point,

Chemical	Frequency of Detection	Sample Quantitation Limit	Minimum Concentration	Maximum Concentration	EPC[a]	Screening Evaluation Rejected	Screening Evaluation Retained
Metals (mg/kg)							
Aluminum[b]	30/30	NA	3,120	26,800	8,095.06	CSB	
Arsenic[c]	11/30	0.52 - 12	1.4	18	5.37	CSB	
Barium[d]	30/30	NA	0.3	140	70.45		X
Beryllium[c]	14/30	0.2 - 1.2	0.2	1.8	0.73	CSB	
Cadmium[c]	13/30	0.08 - 1.2	0.1	4.3	0.78	CSB	
Chromium[e]	30/30	NA	11.4	50.8	34.56	CSB	
Cobalt[e]	19/30	0.8 - 5.9	3.6	10.4	6.63	CSB	
Copper[b]	30/30	NA	5.6	86.2	23.26		X
Iron[b]	30/30	NA	760	21,400	10,966.4	EN	
Lead[e]	22/30	0.24 - 5.9	2.1	9,890	1,780.33		X
Manganese[b]	30/30	NA	72.4	352	176.64	CSB	
Mercury[c]	1/11	0.15 - 0.18	0.46	0.46	0.2	CSB	
Nickel[d]	30/30	NA	11.6	47	27.8	CSB	
Selenium[c]	3/30	0.54 - 12	0.66	0.74	0.74		X
Silver[c]	1/30	0.18 - 5.9	1.2	1.2	1.2	FOD	
Titanium[f]	19/19	0.2 - 5.9	264	590	432.99	CSB	
Vanadium[f]	30/30	NA	13.9	62.3	26.1	CSB	
Zinc[b]	30/30	NA	16.6	151	55.17		X
Pesticides (mg/kg)							
4,4'-DDD[c]	2/19	0.0021 - 0.17	0.0024	0.009	0.009		X
4,4'-DDE[c]	4/19	0.0021 - 0.17	0.0061	0.023	0.023		X
4,4'-DDT[c]	3/19	0.0021 - 0.17	0.0027	0.053	0.046		X
alpha-Chlordane[c]	2/10	0.082 - 0.87	0.0009	0.027	0.027		X
gamma-Chlordane[c]	2/10	0.082 - 0.87	0.0014	0.022	0.022		X
SVOCs (mg/kg)							
2-Methylnaphthalene[f]	49/66	0.00022 - 0.084	0.00026	36	0.612		X
Acenaphthene[c]	21/54	0.00022 - 0.0096	0.00029	0.13	0.021		X
Acenaphthylene[f]	27/66	0.00017 - 0.01	0.00035	0.056	0.013		X
Anthracene[f]	32/55	0.0002 - 0.0043	0.00041	0.08	0.02		X
Benzo(a)anthracene[e]	50/59	0.00014 - 0.0097	0.00028	0.11	0.054		X
Benzo(a)pyrene[e]	53/58	0.00015 - 0.0073	0.00017	0.19	0.047		X
Benzo(b)fluoranthene[e]	55/61	0.00015 - 0.007	0.00025	0.17	0.045		X
Benzo(g,h,i)perylene[e]	53/61	0.00011 - 0.0081	0.0002	0.2	0.04		X
Benzo(k)fluoranthene[e]	48/58	0.00016 - 0.0097	0.0002	0.085	0.032		X
Carbazole[c]	1/11	0.34 - 0.39	0.018	0.018	0.018		X
Chrysene[e]	56/61	0.00016 - 0.0092	0.00022	0.14	0.048		X
Dibenzo(a,h)anthracene[c]	33/66	0.00019 - 0.0076	0.00035	0.038	0.016		X
Fluoranthene[e]	54/61	0.00018 - 0.0103	0.0004	0.35	0.091		X
Fluorene[c]	23/55	0.00018 - 0.012	0.0003	0.091	0.019		X
Indeno(1,2,3-cd)pyrene[e]	46/57	0.00016 - 0.0105	0.00017	0.13	0.049		X
Naphthalene[f]	50/66	0.00022 - 0.105	0.00027	34	0.363		X
Phenanthrene[e]	47/58	0.00016 - 0.0092	0.00045	0.25	0.108		X
Pyrene[e]	52/62	0.00012 - 0.0087	0.00059	0.33	0.131		X

TABLE I-22: SITE 22 SURFACE SOIL DETECTED CONSTITUENT SCREENING--SELECTION OF ECOLOGICAL CHEMICALS OF POTENTIAL CONCERN

Ecological Risk Assessment for Sites 9, 13, 19, 22, and 23, Alameda Point,

Chemical	Frequency of Detection	Sample Quantitation Limit	Minimum Concentration	Maximum Concentration	EPC[a]	Screening Evaluation	
						Rejected	Retained
VOCs (mg/kg)							
4-Methyl-2-pentanone[c]	1/14	0.0059 - 7.2	72	72	14.3		X
Benzene[c]	1/15	0.005 - 7.2	0.006	0.006	0.006		X
Ethylbenzene[c]	7/15	0.005 - 7.2	0.012	52	9.65		X
Toluene[f]	10/18	0.005 - 7.2	0.003	28	8.51		X
Xylene (Total)[c]	6/15	0.005 - 7.2	0.07	22	4.67		X

Notes:

a	The EPC is the lesser of the UCL95 and the maximum detected concentration. The maximum detected concentration is used for all samples with fewer than three detected measurements.
b	Distribution determined to be unknown but assumed to be lognormal based on examination of probability plots and outlier box plots.
c	Distribution not tested.
d	Distribution determined to be normal.
e	Distribution determined to be unknown but assumed to be normal based on examination of probability plots and outlier box plots.
f	Distribution determined to be lognormal.
CSB	Concentrations within statistical background
DDD	Dichlorodiphenyldichloroethane
DDE	Dichlorodiphenyldichloroethene
DDT	Dichlorodiphenyltrichloroethane
EN	Essential nutrient
EPC	Exposure point concentration
FOD	Frequency of detection five percent or lower
mg/kg	Millogram per kilogram
NA	Not applicable, frequency of detection is 100 percent
SVOC	Semivolatile organic chemical
UCL95	95th percentile upper confidence limit on the arithmetic mean
VOC	Volatile organic chemical

TABLE I-23: SITE 23 SURFACE SOIL DETECTED CONSTITUENT SCREENING--SELECTION OF ECOLOGICAL CHEMICALS OF POTENTIAL CONCERN

Ecological Risk Assessment for Sites 9, 13, 19, 22, and 23, Alameda Point

Chemical	Frequency of Detection	Sample Quantitation Limit	Minimum Concentration	Maximum Concentration	EPC[a]	Screening Evaluation Rejected	Screening Evaluation Retained
Metals (mg/kg)							
Aluminum[b]	30/30	NA	2,880	21,900	5,564.98	CSB	
Antimony[c]	5/30	0.46 - 6.9	2.4	4.8	3.13		X
Arsenic[c]	7/30	0.52 - 12	0.84	4.3	4.30	CSB	
Barium[d]	26/26	NA	18.8	300	77.8		X
Beryllium[c]	4/30	0.2 - 1.2	0.13	0.22	0.22	CSB	
Cadmium[c]	14/30	0.06 - 1.2	0.18	10	1.43		X
Chromium[d]	31/31	NA	7.3	76.9	33.92	CSB	
Cobalt[b]	19/30	0.8 - 5.8	2.8	13.3	5.83	CSB	
Copper[b]	26/30	0.4 - 5.8	4.5	113	28.76	CSB	
Iron[b]	30/30	NA	4,690	25,900	9,138.31	EN	
Lead[c]	14/31	0.24 - 5.9	1.3	120	21.44		X
Manganese[d]	30/30	NA	69.8	414	141.33	CSB	
Nickel[b]	30/30	NA	4.7	32	24.2	CSB	
Silver[c]	1/30	0.18 - 5.8	0.38	0.38	0.38	FOD	
Thallium[c]	2/30	0.4 - 12	2.9	3.3	3.3	CSB	
Titanium[b]	25/25	NA	234	879	438.09	CSB	
Vanadium[b]	30/30	NA	12	82	21.92	CSB	
Zinc[b]	29/30	0.6 - 5.8	17	79	37.52	CSB	
Pesticides and PCBs (mg/kg)							
4,4'-DDT[c]	2/16	0.0021 - 0.094	0.0028	0.0054	0.0054		X
Aroclor-1260[c]	1/16	0.017 - 0.94	0.038	0.038	0.038		X
SVOCs (mg/kg)							
2-Methylphenol[c]	1/36	0.34 - 7	0.021	0.021	0.021	FOD - NB	
2-Methylnaphthalene[c]	53/180	0.00022 - 0.0423	0.00024	0.031	0.028		X
4-Methylphenol[c]	1/36	0.34 - 7	0.048	0.048	0.048	FOD - NB	
2,4-Dimethylphenol[c]	1/36	0.34 - 7	0.052	0.052	0.052	FOD - NB	
Acenaphthene[c]	15/180	0.00022 - 0.063	0.00024	0.072	0.029		X
Acenaphthylene[c]	36/180	0.00017 - 0.069	0.00021	0.037	0.029		X
Anthracene[c]	43/180	0.0002 - 0.058	0.00021	0.43	0.035		X
Benzo(a)anthracene[b]	96/180	0.00014 - 0.095	0.00021	2.1	0.078		X
Benzo(a)pyrene[b]	91/180	0.00015 - 0.074	0.00027	2	0.091		X
Benzo(b)fluoranthene[b]	93/180	0.00015 - 0.069	0.00039	2	0.09		X
Benzo(g,h,i)perylene[b]	107/180	0.00011 - 0.079	0.00016	1.3	0.13		X
Benzo(k)fluoranthene[c]	71/180	0.00016 - 0.095	0.00021	1.6	0.072		X
Chrysene[b]	101/180	0.00016 - 0.09	0.00033	2.3	0.083		X
Dibenzo(a,h)anthracene[c]	69/178	0.00019 - 0.074	0.00024	0.39	0.033		X
Fluoranthene[b]	93/180	0.00018 - 0.1	0.00022	3.4	0.119		X
Fluorene[c]	29/180	0.00018 - 0.053	0.00018	0.059	0.029		X
Indeno(1,2,3-cd)pyrene[c]	85/180	0.00016 - 0.11	0.0002	1.4	0.068		X
Naphthalene[c]	62/180	0.00022 - 0.053	0.00024	0.037	0.028		X
n-Nitroso-diphenylamine[c]	4/36	0.34 - 7	0.046	0.22	0.22		X
Phenanthrene[c]	87/177	0.00016 - 0.09	0.00019	1.5	0.072		X
Pyrene[b]	103/180	0.00012 - 0.085	0.00019	2.7	0.126		X
VOCs (mg/kg)							
Toluene[c]	11/23	0.005 - 0.029	0.007	1.1	0.15		X

TABLE I-23: SITE 23 SURFACE SOIL DETECTED CONSTITUENT SCREENING--SELECTION OF ECOLOGICAL CHEMICALS OF POTENTIAL CONCERN

Ecological Risk Assessment for Sites 9, 13, 19, 22, and 23, Alameda Point

Chemical	Frequency of Detection	Sample Quantitation Limit	Minimum Concentration	Maximum Concentration	EPC[a]	Screening Evaluation	
						Rejected	Retained

Notes:

a	The EPC is the lesser of the UCL95 and the maximum detected concentration. The maximum detected concentration is used for all samples with fewer than three detected measurements.
b	Distribution determined to be unknown but assumed to be lognormal based on examination of probability plots and outlier box plots.
c	Distribution not tested.
d	Distribution determined to be normal.
e	Distribution determined to be unknown but assumed to be normal based on examination of probability plots and outlier box plots.
f	Distribution determined to be lognormal.
CSB	Concentrations within statistical background
DDT	Dichlorodiphenyltrichloroethane
EN	Essential nutrient
EPC	Exposure point concentration
FOD	Frequency of detection five percent or lower
mg/kg	Millogram per kilogram
NA	Not applicable, frequency of detection is 100 percent
SVOC	Semivolatile organic chemical
UCL95	95th percentile upper confidence limit on the arithmetic mean
VOC	Volatile organic chemical

TABLE I-24: SITE 9 - SURFACE SOIL HAZARD QUOTIENT BY MEASUREMENT ENDPOINT

Ecological Risk Assessment for Sites 9, 13, 19, 22, and 23, Alameda Point, Alameda

	MEASUREMENT ENDPOINTS							
	Reproductive or Physiological Impacts to the California Ground Squirrel		Reproductive or Physiological Impacts to the Alameda Song Sparrow		Reproductive or Physiological Impacts to the American Robin		Reproductive or Physiological Impacts to the Red-tailed Hawk	
	HAZARD QUOTIENT							
Ecological COPC	**High TRV**	**Low TRV**	**High TRV**	**Low TRV**	**High TRV**	**Low TRV**	**High TRV**	**Low TRV**
Barium	6.05E-02[a]	2.31E-01[a]	3.26E-01[b]	6.54E-01[b]	1.45E-01[b]	2.92E-01[b]	1.72E-02[b]	3.45E-02[b]
Beryllium	1.42E-03[a]	1.42E-02[a]	QE	QE	QE	QE	QE	QE
Chromium	1.44E-02[a]	5.78E-02[a]	5.70E-01[b]	2.84E+00[b]	2.73E-01[b]	1.36E+00[b]	1.07E-02[b]	5.33E-02[b]
Lead	1.42E-04[a]	2.95E-02[b]	4.51E-02[b]	1.87E+01[b]	2.11E-02[b]	8.79E+00[b]	1.27E-03[b]	5.28E-01[b]
Lead alternate low TRV[c]	NA	NA	NA	7.12E-02[b]	NA	3.34E-02[b]	NA	2.01E-03[b]
HMW PAHs	3.55E-05[a]	8.87E-04[a]	QE	QE	QE	QE	QE	QE
LMW PAHs	1.80E-05[b]	5.40E-05[b]	QE	QE	QE	QE	QE	QE
n-Nitroso-diphenylamine	QE	QE	QE	QE	QE	QE	QE	QE
Pentachlorophenol	6.69E+00[a]	6.69E+01[a]	QE	QE	QE	QE	QE	QE
1,2-Dichlorethene	1.42E-05[a]	1.42E-04[a]	QE	QE	QE	QE	QE	QE
Ethylbenzene	QE	QE	QE	QE	QE	QE	QE	QE
Tetrachloroethene	2.62E-04[a]	1.31E-03[a]	QE	QE	QE	QE	QE	QE
Toluene	2.49E-04[b]	2.49E-03[b]	QE	QE	QE	QE	QE	QE
Xylene	2.09E-01[b]	2.59E-01[b]	QE	QE	QE	QE	QE	QE

Notes:

a	TRV based on an physiological effect.
b	TRV based on an reproductive effect.
c	The Navy established avian low TRV of 0.014 mg/kg-day is considered highly conservative. For comparison purposes, an alternative, less conservative, low TRV of 3.85 mg/kg-day, as referenced by Sample and others (1996), was used.
COPC	Chemical of potential concern
HMW	High molecular weight
LMW	Low molecular weight
mg/kg-day	Milligram per kilogram per day
NA	Not applicable
PAH	Polynuclear aromatic hydrocarbon
QE	No TRV developed for Ecological COPC and endpoint-qualitative evaluation only
TRV	Toxicity reference value

Reference:

Sample, B.E., D.M. Opresko, and G.W. Suter, II. 1996. "Toxicological Benchmarks for Wildlife: 1996 Revision." ES/ER/TM-86/R3. Oak Ridge National Laboratory. Oak Ridge, Tennessee.

TABLE I-25: SITE 13 - SURFACE SOIL HAZARD QUOTIENT BY MEASUREMENT ENDPOINT

Ecological Risk Assessment for Sites 9, 13, 19, 22, and 23, Alameda Point, Alameda, California

	MEASUREMENT ENDPOINTS							
	Reproductive or Physiological Impacts to the California Ground Squirrel		Reproductive or Physiological Impacts to the Alameda Song Sparrow		Reproductive or Physiological Impacts to the American Robin		Reproductive or Physiological Impacts to the Red-tailed Hawk	
	HAZARD QUOTIENT							
Ecological COPC	High TRV	Low TRV	High TRV	Low TRV	High TRV	Low TRV	High TRV	Low TRV
Antimony	1.42E-03[a]	6.39E-01[a]	2.86E-02[b]	1.15E-01[b]	1.28E-02[b]	5.11E-02[b]	1.48E-03[b]	5.92E-03[b]
Arsenic	1.25E-02[a]	1.72E-01[a]	4.53E-02[b]	1.81E-01[b]	2.05E-02[b]	8.21E-02[b]	2.12E-03[b]	8.47E-03[b]
Lead	2.28E-03[a]	4.75E-01[b]	7.26E-01[b]	3.00E+02[b]	3.40E-01[b]	1.41E+02[b]	2.04E-02[b]	8.48E+00[b]
Lead alternate low TRV[c]	NA	NA	NA	1.14E+00[b]	NA	5.37E-01[b]	NA	3.23E-02[b]
Mercury	1.42E-03[a]	2.27E-02[a]	6.63E-01[b]	3.06E+00[b]	2.90E-01[b]	1.34E+00[b]	4.34E-02[b]	2.00E-01[b]
Selenium	3.77E-02[b]	9.10E-01[a]	8.37E-01[b]	3.38E+00[b]	3.73E-01[b]	1.51E+00[b]	4.65E-02[b]	1.88E-01[b]
Zinc	1.81E-02[b]	8.72E-01[a]	8.86E-01[a]	8.86E+00[a]	3.96E-01[a]	3.90E+00[a]	5.56E-02[a]	5.56E-01[a]
DDTt	1.48E-04[b]	2.97E-03[b]	3.49E-02[b]	7.46E+00[b]	1.53E-02[b]	3.26E+00[b]	3.18E-02[b]	6.83E+00[b]
Heptachlor epoxide	4.51E-05[b]	2.37E-03[b]	4.35E-03[b]	9.32E-01[b]	1.90E-03[b]	4.67E-01[b]	1.56E-03[b]	3.36E-01[b]
HMW PAHs	2.71E-04[a]	6.76E-03[a]	QE	QE	QE	QE	QE	QE
LMW PAHs	8.41E-05[b]	2.53E-04[b]	QE	QE	QE	QE	QE	QE
Carbazole	QE	QE	QE	QE	QE	QE	QE	QE
Di-n-butylphthalate	5.20E-04[b]	1.74E-03[b]	1.18E+01[b]	1.18E+02[b]	5.12E+00[b]	5.12E+01[b]	2.26E+00[b]	2.26E+01[b]
n-Nitroso-diphenylamine	QE	QE	QE	QE	QE	QE	QE	QE
Pentachlorophenol	1.56E+01[a]	1.56E+02[a]	QE	QE	QE	QE	QE	QE
Acetone	1.87E-04[a]	9.33E-04[a]	QE	QE	QE	QE	QE	QE
Benzene	3.27E-05[b]	3.27E-04[b]	QE	QE	QE	QE	QE	QE
Carbon disulfide	QE	QE	QE	QE	QE	QE	QE	QE
Ethylbenzene	QE	QE	QE	QE	QE	QE	QE	QE
Toluene	4.56E-04[b]	4.56E-03[b]	QE	QE	QE	QE	QE	QE
Xylene	1.46E-01[b]	1.80E-01[b]	QE	QE	QE	QE	QE	QE

TABLE I-25: SITE 13 - SURFACE SOIL HAZARD QUOTIENT BY MEASUREMENT ENDPOINT

Ecological Risk Assessment for Sites 9, 13, 19, 22, and 23, Alameda Point, Alameda, California

Notes:

a	TRV based on an physiological effect.
b	TRV based on an reproductive effect.
c	The Navy established avian low TRV of 0.014 mg/kg-day is considered highly conservative. For comparison purposes, an alternative, less conservative, low TRV of 3.85 mg/kg-day, as referenced by Sample and others (1996), was used.
COPC	Chemical of potential concern
DDTt	Summed concentration of 4,4'-dichlorodiphenyldichloroethane, 4,4'-dichlorodiphenyldichloroethene, and 4,4'-dichlorodiphenyltrichloroethane
HMW	High molecular weight
LMW	Low molecular weight
mg/kg-day	Milligram per kilogram per day
NA	Not applicable
PAH	Polynuclear aromatic hydrocarbon
QE	No TRV developed for Ecological COPC and endpoint-qualitative evaluation only
TRV	Toxicity reference value

Reference:

Sample, B.E., D.M. Opresko, and G.W. Suter, II. 1996. "Toxicological Benchmarks for Wildlife: 1996 Revision." ES/ER/TM-86/R3. Oak Ridge National Laboratory. Oak Ridge, Tennessee.

TABLE I-26: SITE 19 - SURFACE SOIL HAZARD QUOTIENT BY MEASUREMENT ENDPOINT

Ecological Risk Assessment for Sites 9, 13, 19, 22, and 23, Alameda Point, Alameda, California

	MEASUREMENT ENDPOINTS							
	Reproductive or Physiological Impacts to the California Ground Squirrel		Reproductive or Physiological Impacts to the Alameda Song Sparrow		Reproductive or Physiological Impacts to the American Robin		Reproductive or Physiological Impacts to the Red-tailed Hawk	
	HAZARD QUOTIENT							
Ecological COPC	High TRV	Low TRV	High TRV	Low TRV	High TRV	Low TRV	High TRV	Low TRV
Barium	7.86E-02[a]	3.01E-01[a]	4.24E-01[b]	8.50E-02[b]	1.89E-01[b]	3.79E-01[b]	1.08E-01[b]	2.16E-01[b]
Copper	1.15E-03[a]	2.69E-01[a]	1.01E-01[a]	2.52E+00[a]	4.62E-02[a]	1.15E+00[a]	9.76E-03[a]	2.43E-01[a]
Lead	1.12E-03[a]	2.34E-01[b]	3.58E-01[b]	1.48E+02[b]	1.67E-01[b]	6.96E+01[b]	4.06E-02[b]	1.68E+01[b]
Lead alternate low TRV[c]	NA	NA	NA	5.64E-01[b]	NA	2.65E-01[b]	NA	6.42E-02[b]
Zinc	3.90E-03[b]	1.88E-01[a]	1.91E-01[a]	1.91E+00[a]	8.39E-02[a]	8.39E-01[a]	5.91E-02[a]	5.91E-01[a]
4-Chloro-3-methylphenol	QE	QE	QE	QE	QE	QE	QE	QE
Bis(2-ethylhexyl)phthalate	2.67E-01[b]	2.67E+00[b]	6.01E+01[b]	6.01E+02[b]	2.61E+01[b]	2.61E+02[b]	2.06E+01[b]	2.06E+02[b]
Diethylphthalate	1.60E-05[b]	1.60E-04[b]	QE	QE	QE	QE	QE	QE
Di-n-butylphthalate	3.22E-02[b]	1.08E-01[b]	7.29E+02[b]	7.29E+03[b]	3.17E+02[b]	3.17E+03[b]	2.49E+02[b]	2.49E+03[b]
HMW PAHs	8.86E-05[a]	2.22E-03[a]	QE	QE	QE	QE	QE	QE
LMW PAHs	3.29E-06[b]	9.89E-06[b]	QE	QE	QE	QE	QE	QE
n-Nitroso-diphenylamine	QE	QE	QE	QE	QE	QE	QE	QE
Pentachlorophenol	2.49E+01[a]	2.49E+02[a]	QE	QE	QE	QE	QE	QE
1,3-Dichlorobenzene	QE	QE	QE	QE	QE	QE	QE	QE
Acetone	1.27E-05[a]	6.34E-05[a]	QE	QE	QE	QE	QE	QE
Methylene chloride	9.47E-05[a]	8.09E-04[a]	QE	QE	QE	QE	QE	QE
Tetrachloroethene	1.05E-03[a]	5.25E-03[a]	QE	QE	QE	QE	QE	QE
Toluene	6.05E-04[b]	6.05E-03[b]	QE	QE	QE	QE	QE	QE
Trichloroethene	2.50E-04[a]	2.50E-03[a]	QE	QE	QE	QE	QE	QE
Xylene	1.51E-02[b]	1.86E-02[b]	QE	QE	QE	QE	QE	QE

Notes:

a TRV based on an physiological effect.

b TRV based on an reproductive effect.

c The Navy established avian low TRV of 0.014 mg/kg-day is considered highly conservative. For comparison purposes, an alternative, less conservative, low TRV of 3.85 mg/kg-day, as referenced by Sample and others (1996), was used.

COPC	Chemical of potential concern	NA	Not applicable
HMW	High molecular weight	PAH	Polynuclear aromatic hydrocarbon
LMW	Low molecular weight	QE	No TRV developed for Ecological COPC and endpoint-qualitative evaluation only
mg/kg-day	Milligram per kilogram per day	TRV	Toxicity reference value

Reference:

Sample, B.E., D.M. Opresko, and G.W. Suter, II. 1996. "Toxicological Benchmarks for Wildlife: 1996 Revision." ES/ER/TM-86/R3. Oak Ridge National Laboratory. Oak Ridge, Tennessee.

TABLE I-27: SITE 22 - SURFACE SOIL HAZARD QUOTIENT BY MEASUREMENT ENDPOINT

Ecological Risk Assessment for Sites 9, 13, 19, 22, and 23, Alameda Point, Alameda, California

	MEASUREMENT ENDPOINTS							
	Reproductive or Physiological Impacts to the California Ground Squirrel		Reproductive or Physiological Impacts to the Alameda Song Sparrow		Reproductive or Physiological Impacts to the American Robin		Reproductive or Physiological Impacts to the Red-tailed Hawk	
	HAZARD QUOTIENT							
Ecological COPC	**High TRV**	**Low TRV**	**High TRV**	**Low TRV**	**High TRV**	**Low TRV**	**High TRV**	**Low TRV**
Barium	5.05E-02[a]	1.93E-01[a]	2.72E-01[b]	5.47E-01[b]	1.22E-01[b]	2.44E-01[b]	6.02E-04[b]	1.21E-03[b]
Copper	5.18E-04[a]	1.21E-01[a]	4.56E-02[a]	1.13E+00[a]	2.09E-02[a]	5.19E-01[a]	2.06E-04[a]	5.11E-03[a]
Lead	4.86E-02[a]	1.01E+01[b]	1.55E+01[b]	6.40E+03[b]	7.24E+00[b]	3.01E+03[b]	1.06E-01[b]	4.39E+01[b]
Lead alternate low TRV[c]	NA	NA	NA	2.44E+01[b]	NA	1.14E+01[b]	NA	1.67E-01[b]
Selenium	8.53E-03[b]	2.26E-01[a]	1.89E-01[b]	7.65E-01[b]	8.45E-02[b]	3.42E-01[b]	4.97E-04[b]	2.01E-03[b]
Zinc	3.33E-03[b]	1.60E-01[a]	1.63E-01[a]	1.63E+00[a]	7.16E-02[a]	7.16E-01[a]	1.73E-04[a]	1.73E-03[a]
alpha-Chlordane	1.47E-01[b]	2.95E-01[b]	1.78E+01[b]	3.82E+03[b]	7.76E+00[b]	1.66E+03[b]	6.35E-05[b]	1.36E-02[b]
gamma-Chlordane	1.20E-01[b]	2.40E-01[b]	1.45E+01[b]	3.08E+03[b]	6.32E+00[b]	1.35E+03[b]	6.17E-05[b]	1.32E-02[b]
DDTt	2.41E-04[b]	4.83E-03[b]	5.67E-02[b]	1.20E+01[b]	2.48E-02[b]	5.30E+00[b]	3.05E-03[b]	6.55E-01[b]
HMW PAHs	1.19E-04[a]	2.97E-03[a]	QE	QE	QE	QE	QE	QE
LMW PAHs	4.75E-05[b]	1.43E-04[b]	QE	QE	QE	QE	QE	QE
Carbazole	QE	QE	QE	QE	QE	QE	QE	QE
4-Methyl-2-pentanone	7.09E-03[a]	7.09E-02[a]	QE	QE	QE	QE	QE	QE
Benzene	4.91E-06[b]	4.91E-05[b]	QE	QE	QE	QE	QE	QE
Ethylbenzene	QE	QE	QE	QE	QE	QE	QE	QE
Toluene	1.76E-02[b]	1.76E-01[b]	QE	QE	QE	QE	QE	QE
Xylene	2.27E+00[b]	2.81E+00[b]	QE	QE	QE	QE	QE	QE

TABLE I-27: SITE 22 - SURFACE SOIL HAZARD QUOTIENT BY MEASUREMENT ENDPOINT

Ecological Risk Assessment for Sites 9, 13, 19, 22, and 23, Alameda Point, Alameda, California

Notes:

a	TRV based on an physiological effect.
b	TRV based on an reproductive effect.
c	The Navy established avian low TRV of 0.014 mg/kg-day is considered highly conservative. For comparison purposes, an alternative, less conservative, low TRV of 3.85 mg/kg-day, as referenced by Sample and others (1996), was used.

COPC	Chemical of potential concern
DDTt	Summed concentration of 4,4'-dichlorodiphenyldichloroethane, 4,4'-dichlorodiphenyldichloroethene, and 4,4'-dichlorodiphenyltrichloroethane
HMW	High molecular weight
LMW	Low molecular weight
mg/kg-day	Milligram per kilogram per day
NA	Not applicable
PAH	Polynuclear aromatic hydrocarbon
QE	No TRV developed for Ecological COPC and endpoint-qualitative evaluation only
TRV	Toxicity reference value

Reference:

Sample, B.E., D.M. Opresko, and G.W. Suter, II. 1996. "Toxicological Benchmarks for Wildlife: 1996 Revision." ES/ER/TM-86/R3. Oak Ridge National Laboratory. Oak Ridge, Tennessee.

TABLE I-28: SITE 23 - SURFACE SOIL HAZARD QUOTIENT BY MEASUREMENT ENDPOINT

Ecological Risk Assessment for Sites 9, 13, 19, 22, and 23, Alameda Point, Alameda, California

	MEASUREMENT ENDPOINTS							
	Reproductive or Physiological Impacts to the California Ground Squirrel		Reproductive or Physiological Impacts to the Alameda Song Sparrow		Reproductive or Physiological Impacts to the American Robin		Reproductive or Physiological Impacts to the Red-tailed Hawk	
	HAZARD QUOTIENT							
Ecological COPC	**High TRV**	**Low TRV**	**High TRV**	**Low TRV**	**High TRV**	**Low TRV**	**High TRV**	**Low TRV**
Antimony	1.83E-03[a]	8.23E-01[a]	3.69E-02[b]	1.48E-01[b]	1.64E-02[b]	6.58E-02[b]	1.91E-03[b]	7.62E-03[b]
Barium	5.58E-02[a]	2.14E-01[a]	3.01E-01[b]	6.04E-01[b]	1.34E-01[b]	2.69E-01[b]	1.59E-02[b]	3.18E-02[b]
Cadmium	2.79E-02[b]	1.23E+00[b]	7.33E-02[a]	1.50E+01[a]	3.20E-02[a]	6.57E+00[a]	4.59E-03[a]	9.35E-01[a]
Lead	5.84E-04[a]	1.22E-01[b]	1.86E-01[b]	7.70E+01[b]	8.72E-02[b]	3.63E+01[b]	5.24E-03[b]	2.18E+00[b]
Lead alternate low TRV[c]	NA	NA	NA	2.94E-01[b]	NA	1.38E-01[b]	NA	8.29E-03[b]
Total PCB	1.55E-03[b]	5.58E-03[a]	3.27E-02[b]	3.97E-01[b]	1.43E-02[b]	1.74E-01[b]	2.98E-02[b]	3.61E-01[b]
DDTt	1.67E-05[b]	3.34E-04[b]	3.92E-03[b]	8.40E-01[b]	1.72E-03[b]	3.67E-01[b]	3.58E-03[b]	7.68E-01[b]
HMW PAHs	1.91E-04[a]	4.79E-03[a]	QE	QE	QE	QE	QE	QE
LMW PAHs	1.03E-05[b]	3.09E-05[b]	QE	QE	QE	QE	QE	QE
n-Nitroso-diphenylamine	QE	QE	QE	QE	QE	QE	QE	QE
Toluene	3.11E-04[b]	3.11E-03[b]	QE	QE	QE	QE	QE	QE

Notes:

a	TRV based on an physiological effect.
b	TRV based on an reproductive effect.
c	The Navy established avian low TRV of 0.014 mg/kg-day is considered highly conservative. For comparison purposes, an alternative, less conservative, low TRV of 3.85 mg/kg-day, as referenced by Sample and others (1996), was used.
COPC	Chemical of potential concern
DDTt	Summed concentration of 4,4'-dichlorodiphenyldichloroethane, 4,4'-dichlorodiphenyldichloroethene, and 4,4'-dichlorodiphenyltrichloroethane
HMW	High molecular weight
LMW	Low molecular weight
mg/kg-day	Milligram per kilogram per day
NA	Not applicable
PAH	Polynuclear aromatic hydrocarbon
QE	No TRV developed for Ecological COPC and endpoint-qualitative evaluation only
TRV	Toxicity reference value

Reference:

Sample, B.E., D.M. Opresko, and G.W. Suter, II. 1996. "Toxicological Benchmarks for Wildlife: 1996 Revision." ES/ER/TM-86/R3. Oak Ridge National Laboratory. Oak Ridge, Tennessee.

ATTACHMENT I1
ECOTOXICOLOGICAL PROFILES FOR CHEMICALS OF POTENTIAL ECOLOGICAL CONCERN

CONTENTS

ACRONYMS AND ABBREVIATIONS I1-viii

1.0 INTRODUCTION I1-1

2.0 METALS I1-1

2.1 ANTIMONY I1-1
2.1.1 Plants I1-2
2.1.2 Invertebrates I1-2
2.1.3 Amphibians and Reptiles I1-2
2.1.4 Fish and Aquatic Organisms I1-2
2.1.5 Birds I1-2
2.1.6 Mammals I1-2
2.2 ARSENIC I1-2
2.2.1 Plants I1-3
2.2.2 Invertebrates I1-3
2.2.3 Amphibians and Reptiles I1-3
2.2.4 Fish and Aquatic Organisms I1-3
2.2.5 Birds I1-4
2.2.6 Mammals I1-4
2.3 BARIUM I1-5
2.3.1 Plants I1-5
2.3.2 Invertebrates I1-5
2.3.3 Amphibians and Reptiles I1-5
2.3.4 Fish and Aquatic Organisms I1-6
2.3.5 Birds I1-6
2.3.6 Mammals I1-6
2.4 BERYLLIUM I1-6
2.4.1 Plants I1-7
2.4.2 Invertebrates I1-7
2.4.3 Amphibians and Reptiles I1-7
2.4.4 Fish and Aquatic Organisms I1-7
2.4.5 Birds I1-7
2.4.6 Mammals I1-7
2.5 CADMIUM I1-8
2.5.1 Plants I1-8
2.5.2 Invertebrates I1-8
2.5.3 Amphibians and Reptiles I1-8
2.5.4 Fish and Aquatic Organisms I1-9

2.5.5 Birds I1-9
2.5.6 Mammals I1-9
2.6 CHROMIUM I1-9
2.6.1 Plants I1-11
2.6.2 Invertebrates I1-12
2.6.3 Amphibians and Reptiles I1-12
2.6.4 Fish and Aquatic Organisms I1-12
2.6.5 Birds I1-12
2.6.6 Mammals I1-13
2.7 COPPER I1-13
2.7.1 Plants I1-14
2.7.2 Invertebrates I1-14
2.7.3 Amphibians and Reptiles I1-14
2.7.4 Fish and Aquatic Organisms I1-15
2.7.5 Birds I1-15
2.7.6 Mammals I1-15
2.8 LEAD I1-15
2.8.1 Plants I1-16
2.8.2 Invertebrates I1-16
2.8.3 Amphibians and Reptiles I1-16
2.8.4 Fish and Aquatic Organisms I1-17
2.8.5 Birds I1-17
2.8.6 Mammals I1-17
2.9 MERCURY I1-17
2.9.1 Plants I1-18
2.9.2 Invertebrates I1-18
2.9.3 Amphibians and Reptiles I1-19
2.9.4 Fish and Aquatic Organisms I1-19
2.9.5 Birds I1-19
2.9.6 Mammals I1-19
2.10 SELENIUM I1-20
2.10.1 Plants I1-20
2.10.2 Invertebrates I1-21
2.10.3 Amphibians and Reptiles I1-21
2.10.4 Fish and Aquatic Organisms I1-21
2.10.5 Birds I1-21
2.10.6 Mammals I1-21

CONTENTS (Continued)

2.11 ZINC I1-22
2.11.1 Plants I1-22
2.11.2 Invertebrates I1-22
2.11.3 Amphibians and Reptiles I1-23
2.11.4 Fish and Aquatic Organisms I1-23
2.11.5 Birds I1-23
2.11.6 Mammals I1-23

3.0 PESTICIDES I1-24
3.1 CHLORDANE (ALPHA AND GAMMA) I1-24
3.1.1 Plants I1-24
3.1.2 Invertebrates I1-25
3.1.3 Amphibians and Reptiles I1-25
3.1.4 Fish and Aquatic Organisms I1-25
3.1.5 Birds I1-25
3.1.6 Mammals I1-25
3.2 DICHLORODIPHENYLTRICHLOROETHANE AND METABOLITES I1-26
3.2.1 Plants I1-26
3.2.2 Invertebrates I1-27
3.2.3 Amphibians and Reptiles I1-27
3.2.4 Fish and Aquatic Organisms I1-27
3.2.5 Birds I1-27
3.2.6 Mammals I1-27
3.3 HEPTACHLOR AND HEPTACHLOR EPOXIDE I1-28
3.3.1 Plants I1-28
3.3.2 Invertebrates I1-28
3.3.3 Amphibians and Reptiles I1-28
3.3.4 Fish and Aquatic Organisms I1-28
3.3.5 Birds I1-28
3.3.6 Mammals I1-29

4.0 POLYCHLORINATED BIPHENYLS I1-29
4.1 PLANTS I1-30
4.2 INVERTEBRATES I1-30
4.3 AMPHIBIANS AND REPTILES I1-30
4.4 FISH AND AQUATIC ORGANISMS I1-30
4.5 BIRDS I1-30
4.6 MAMMALS I1-30

CONTENTS (Continued)

5.0 POLYNUCLEAR AROMATIC HYDROCARBONS I1-31

5.1 PLANTS I1-32
5.2 INVERTEBRATES I1-32
5.3 AMPHIBIANS AND REPTILES I1-32
5.4 FISH AND AQUATIC ORGANISMS I1-32
5.5 BIRDS I1-32
5.6 MAMMALS I1-32

6.0 SEMIVOLATILE ORGANIC COMPOUNDS I1-33

6.1 4-CHLORO-3-METHYLPHENOL I1-33
6.1.1 Plants I1-33
6.1.2 Invertebrates I1-33
6.1.3 Amphibians and Reptiles I1-33
6.1.4 Fish and Aquatic Organisms I1-34
6.1.5 Birds I1-34
6.1.6 Mammals I1-34
6.2 BIS(2-ETHYLHEXYL)PHTHALATE I1-34
6.2.1 Plants I1-35
6.2.2 Invertebrates I1-35
6.2.3 Amphibians and Reptiles I1-35
6.2.4 Fish and Aquatic Organisms I1-35
6.2.5 Birds I1-35
6.2.6 Mammals I1-35
6.3 CARBAZOLE I1-36
6.3.1 Plants I1-36
6.3.2 Invertebrates I1-36
6.3.3 Amphibians and Reptiles I1-36
6.3.4 Fish and Aquatic Organisms I1-36
6.3.5 Birds I1-37
6.3.6 Mammals I1-37
6.4 DIETHYLPHTHALATE I1-37
6.4.1 Plants I1-37
6.4.2 Invertebrates I1-37
6.4.3 Amphibians and Reptiles I1-37
6.4.4 Fish and Aquatic Organisms I1-37
6.4.5 Birds I1-38
6.4.6 Mammals I1-38

CONTENTS (Continued)

6.5 DI-N-BUTYLPHTHALATE I1-38
6.5.1 Plants I1-38
6.5.2 Invertebrates I1-38
6.5.3 Amphibians and Reptiles I1-38
6.5.4 Fish and Aquatic Organisms I1-38
6.5.5 Birds I1-39
6.5.6 Mammals I1-39
6.6 N-NITROSODIPHENYLAMINE I1-39
6.6.1 Plants I1-39
6.6.2 Invertebrates I1-39
6.6.3 Amphibians and Reptiles I1-40
6.6.4 Fish and Aquatic Organisms I1-40
6.6.5 Birds I1-40
6.6.6 Mammals I1-40
6.7 PENTACHLOROPHENOL I1-40
6.7.1 Plants I1-40
6.7.2 Invertebrates I1-41
6.7.3 Amphibians and Reptiles I1-41
6.7.4 Fish and Aquatic Organisms I1-41
6.7.5 Birds I1-41
6.7.6 Mammals I1-41

7.0 VOLATILE ORGANIC COMPOUNDS I1-42
7.1 1,2-DICHLOROETHENE I1-42
7.1.1 Plants I1-42
7.1.2 Invertebrates I1-42
7.1.3 Amphibians and Reptiles I1-42
7.1.4 Fish and Aquatic Organisms I1-42
7.1.5 Birds I1-42
7.1.6 Mammals I1-42
7.2 1,3-DICHLOROBENZENE I1-43
7.2.1 Plants I1-43
7.2.2 Invertebrates I1-43
7.2.3 Amphibians and Reptiles I1-43
7.2.4 Fish and Aquatic Organisms I1-43
7.2.5 Birds I1-43
7.2.6 Mammals I1-43

CONTENTS (Continued)

7.3 4-METHYL-2-PENTANONE I1-44
7.3.1 Plants I1-44
7.3.2 Invertebrates I1-44
7.3.3 Amphibians and Reptiles I1-44
7.3.4 Fish and Aquatic Organisms I1-44
7.3.5 Birds I1-44
7.3.6 Mammals I1-44
7.4 ACETONE I1-45
7.4.1 Plants I1-45
7.4.2 Invertebrates I1-45
7.4.3 Amphibians and Reptiles I1-45
7.4.4 Fish and Aquatic Organisms I1-45
7.4.5 Birds I1-46
7.4.6 Mammals I1-46
7.5 BENZENE I1-46
7.5.1 Plants I1-46
7.5.2 Invertebrates I1-46
7.5.3 Amphibians and Reptiles I1-47
7.5.4 Fish and Aquatic Organisms I1-47
7.5.5 Birds I1-47
7.5.6 Mammals I1-47
7.6 CARBON DISULFIDE I1-47
7.6.1 Plants I1-47
7.6.2 Invertebrates I1-48
7.6.3 Amphibians and Reptiles I1-48
7.6.4 Fish and Aquatic Organisms I1-48
7.6.5 Birds I1-48
7.6.6 Mammals I1-48
7.7 ETHYLBENZENE I1-48
7.7.1 Plants I1-49
7.7.2 Invertebrates I1-49
7.7.3 Amphibians and Reptiles I1-49
7.7.4 Fish and Aquatic Organisms I1-49
7.7.5 Birds I1-49
7.7.6 Mammals I1-49
7.8 METHYLENE CHLORIDE I1-49
7.8.1 Plants I1-50
7.8.2 Invertebrates I1-50

CONTENTS (Continued)

7.8.3 Amphibians and Reptiles I1-50
7.8.4 Fish and Aquatic Organisms I1-50
7.8.5 Birds I1-50
7.8.6 Mammals I1-50
7.9 TETRACHLOROETHENE I1-51
7.9.1 Plants I1-52
7.9.2 Invertebrates I1-52
7.9.3 Amphibians and Reptiles I1-52
7.9.4 Fish and Aquatic Organisms I1-53
7.9.5 Birds I1-53
7.9.6 Mammals I1-53
7.10 TOLUENE I1-54
7.10.1 Plants I1-54
7.10.2 Invertebrates I1-55
7.10.3 Amphibians and Reptiles I1-55
7.10.4 Fish and Aquatic Organisms I1-55
7.10.5 Birds I1-55
7.10.6 Mammals I1-55
7.11 TRICHLOROETHENE I1-55
7.11.1 Plants I1-56
7.11.2 Invertebrates I1-56
7.11.3 Amphibians and Reptiles I1-56
7.11.4 Fish and Aquatic Organisms I1-56
7.11.5 Birds I1-56
7.11.6 Mammals I1-56
7.12 XYLENE I1-56
7.12.1 Plants I1-57
7.12.2 Invertebrates I1-58
7.12.3 Amphibians and Reptiles I1-58
7.12.4 Fish and Aquatic Organisms I1-58
7.12.5 Birds I1-58
7.12.6 Mammals I1-58

8.0 REFERENCES I1-60

ACRONYMS AND ABBREVIATIONS

ATSDR	Agency for Toxic Substances and Disease Registry
BCF	Bioconcentration factors
Ca	Calcium
COPEC	Chemical of potential ecological concern
DCE	Dichloroethene
DDD	Dichlorodiphenyldichloroethane
DDE	Dichlorodiphenyldichloroethene
DDT	Dichlorodiphenyltrichloroethane
DHHS	Department of Health and Himan Services
DNA	Deoxyribonucleic acid
EPA	U.S. Environmental Protection Agency
g/mL	Grams per milliliter
GTF	Glucose tolerance factor
HSDB	Hazardous Substances Database
IARC	International Agency Research Cancer
ICA	International Copper Association
K	Potassium
Koc	Organic carbon/water partition coefficients
Kow	Octanol-Water Coefficient
LC	Lethal concentration
LCLo	Lowest published lethal concentration
LD50	Lethal dose of 50 percent
LOEC	Lowest observed effect concentration
Mg	Magnesium
mg/kg	Milligram per kilogram
mg/kg/day	Milligram per kilogram per day
mg/L	Milligram per liter
mg/m^3	Milligram per cubic meter
mg/mL	Milligram per milliliter
mL/g	Milliliter per gram

Na-K	Sodium-potassium
NAS	National Academy of Sciences
NCRR	National Center for Research Resources
NLM	U.S. National Library of Medicine
NOAEL	No observed adverse effect level
NRCC	National Research Council Canada
NTP	National Toxicology Program
P	Phosphorous
PAH	Polynuclear aromatic hydrocarbon
PCB	Polychlorinated biphenyl
PCE	Perchloroethylene
PCDD	Polychlorodibenzodioxin
PCDF	Polychlorodibenzofuran
ppt	Parts per trillion
PRG	Preliminary remediation goal
ppm	Parts per million
redox	Oxidation-reduction
RBC	Risk-based concentration
RfD	Reference dose
SRC	Southeastern Research Center
SVOC	Semivolatile organic compund
TCDD	2,3,7,8-tetrachlorodibenzodioxin
TCE	Trichloroethylene
VOC	Volatile organic compound
WHO	World Health Organization

1.0 INTRODUCTION

The following sections present identified literature data on toxicological effects of chemicals of potential ecological concern (COPEC) identified at Alameda Point, Alameda, California (Alameda Point). Section 2.0 presents data on metals; Section 3.0 presents data on chlorinated pesticides; Section 4.0 presents data on polychlorinated biphenyls (PCB); Section 5.0 presents data on polynuclear aromatic hydrocarbons (PAH); Section 6.0 presents data on semivolatile organic compounds (SVOC); Section 7.0 presents data on volatile organic compounds (VOC); and Section 8.0 presents the references used to prepare this document.

Bioconcentration in this document is defined as the net accumulation of a substance by an organism as a result of uptake from an aqueous solution. Bioaccumulation is defined as the net accumulation of a substance by an organism as a result of uptake from all environmental sources, including food and water, which are ingested. The amount of a substance that is bioaccumulated in an organism also could be defined as the body burden of the substance in an organism. Biomagnification is defined as the sequential increase in concentration of a chemical from one trophic level to the next.

2.0 METALS

The following sections present data on ecotoxicological effects of various metals identified as COPECs at Alameda Point.

2.1 ANTIMONY

The analysis of tissue samples from lower trophic levels (invertebrates and small mammals) in a food chain suggests that biomagnification did not occur and that mobility of antimony in food chains is low (Ainsworth 1988). This theory is further strengthened by an investigation found that antimony concentrations in small mammals resulting from dietary intake were "very low in all experiments in comparison to the antimony concentrations in the diet" (Ainsworth and Others 1991). Consequently, food chain transfer of antimony to upper trophic-level consumers appears to be negligible.

The toxic action mechanism of metals and arsenic lies in their ability to bind to thiol groups of biological molecules, destroying their function (Balazs and Others 1986). Antimony occurs in the same column of the periodic table of the elements as arsenic; antimony participates in bonding, similar to arsenic. Compared to arsenic, antimony has a lower affinity for bonding to sulfur-containing proteins and for causing protein-DNA cross links (Gebel 1997). Consequently, antimony should possess a lower toxicity compared to arsenic. Therefore, the screening-level ecological risk assessment could use the arsenic toxicity reference value (TRV) as a conservative approach to estimating risk.

2.1.1 Plants

Antimony is considered to be a nonessential metal and is easily taken up by plants if available in soil in soluble forms (Kabata-Pendias and Pendias 1984). The only information found on phytotoxicity was a secondary reference noting undefined, qualitative phytotoxic effects on plants grown in surface soil (Kabata-Pendias and Pendias 1984).

2.1.2 Invertebrates

No information was identified on the effects of antimony on invertebrates.

2.1.3 Amphibians and Reptiles

No information was identified on the effects of antimony on amphibians and reptiles.

2.1.4 Fish and Aquatic Organisms

No information was identified on the effects of antimony on fish and aquatic organisms.

2.1.5 Birds

No information was identified on the effects of antimony on birds.

2.1.6 Mammals

No information was identified on the effects of antimony on mammals.

2.2 ARSENIC

Arsenic is a naturally occurring element that is widely distributed in the environment and is used in metallurgy to harden copper, lead, and alloys and is used in the manufacture of certain types of glass. Historically, some forms of arsenic have been used as pesticides.

Arsenic is present in the environment in both inorganic and organic forms. The bioavailability and toxicity of arsenic are dependent on the chemical and physical forms of arsenic, the exposure route, and the species of concern. Inorganic arsenic is present in the environment in two major forms, arsenate, and arsenite. In the environment, arsenate is more abundant and bioaccumulates more rapidly than arsenite; however, arsenite is the more toxic form (Sadiq 1992). Any environmental conditions that promote an increase in arsenite concentrations will increase the toxicity of arsenic in the environment. The redox environment is the most important environmental parameter that affects the bioavailability of arsenic. Reduced conditions in the environment cause the ratio of arsenite to arsenate to increase, which increases the toxicity of arsenic in the environment. In addition to redox, the pH of the aquatic environment influences

arsenic toxicity. As the pH of water increases, arsenic toxicity decreases as more arsenate is produced (Sadiq 1992).

Marine organisms accumulate more arsenic than freshwater organisms. Arsenate is more readily bioaccumulated than arsenite (Sadiq 1992). Bioconcentration factors (BCF) experimentally determined for arsenic appear to be relatively low. Methylated species of arsenic are transferred efficiently in the food chain (Eisler 1988a); however, it does not appear to be biomagnified through the food chain (Eisler 1988a; Callahan and Others 1979; U.S. Environmental Protection Agency [EPA] 1982a, 1983e, as cited in Agency for Toxic Substances and Disease Registry [ATSDR] 1993a).

2.2.1 Plants

Terrestrial plants may accumulate arsenic by root uptake from the soil or by absorption of airborne arsenic deposited on the leaves. Certain species of plants may accumulate substantial levels of arsenic (Shaw 1990). Soil concentrations of arsenic have been known to reduce crop plant yields (Eisler 1988a). If the roots of the plant absorb excess arsenic, the plant will stop growing and developing (Eisler 1988a). The chemical form of arsenic absorbed by plants will determine the type of toxic effect plants will express. Effects can range from inhibition of light activation, wilting, chlorosis, browning, dehydration, and death (Eisler 1988a).

Marine phytoplankton have the ability to bioconcentrate inorganic arsenic to high levels, then chemically transform arsenic by methylation. Methylated species are efficiently transferred in the food chain (Eisler 1988a); however, arsenic does not appear to be biomagnified through the food chain (Eisler 1988a; Callahan and Others 1979; EPA 1982a, 1983e, as cited in ATSDR 1993a).

2.2.2 Invertebrates

Arsenic has been used as a pesticide in the past. Arsenic may reduce growth and metabolism of soil microbiota, may reduce numbers of bacteria and protozoa, and may adversely affect earthworms by reducing their numbers in the soil (National Research Council Canada [NRCC] 1978, as cited in Eisler 1988a).

2.2.3 Amphibians and Reptiles

Very little information was available on the effects of arsenic on amphibians and reptiles. One report states, however, that developing toad embryos exposed to arsenic concentrations observed that 50 percent of developing embryos died or were malformed (Eisler 1988a).

2.2.4 Fish and Aquatic Organisms

Arsenic can produce both carcinogenic and mutagenic effects in aquatic organisms (Eisler 1988a). Toxic effects of arsenic in fish include impaired behavior, reduced growth, lack

of appetite, and failure to metabolize food (Eisler 1988a). The chemical form of arsenic, the type of organism, and the organism's life stage all influence the organism's susceptibility to arsenic poisoning. In general, the earlier life stages and smaller organisms are more sensitive to arsenic concentrations (Sadiq 1992).

In addition to the stage of development of an organism, the toxic effect of arsenic is influenced by the type of organism. Marine organisms accumulate more arsenic than freshwater organisms. Bioaccumulation of arsenic in marine organisms is influenced by the amount of arsenic in seawater and is further influenced by the marine organism's feeding habits. Bottom feeders appear to be more sensitive to arsenic concentrations than other types of fish (Sadiq 1992). This is because bottom feeders filter the water column and ingest arsenic-containing particulate matter for food. As a result, bottom feeders, such as mollusks, accumulate more arsenic in their soft tissue than fish (Sadiq 1992). Fish, on the other hand, do not have to filter the water column for food and as a result, the main route of uptake involves diffusion of dissolved residual around the gill membrane (Sadiq 1992).

2.2.5 Birds

Some species of birds are more sensitive to arsenic exposure, while others appear to be more tolerant of arsenic exposure (Eisler 1988a). The acute oral exposure of inorganic arsenic destroys the blood vessel lining in the gut, which can result in lower blood pressure (Eisler 1988a). The acute, oral exposure of arsenite in birds was observed to cause hepatocyte damage by arsenic inhibition of the sodium pump in cells (Eisler 1988a). Acute effects of arsenite in birds include muscular incoordination, debility, slowness, spasmodic movement, falling, hyperactivity, fluffed feathers, drooped eyelids, huddled position, unkempt appearance, loss of righting reflex, immobility, and seizures (Eisler 1988a). Chronic effects include systemic, growth, behavioral, and reproductive problems (Stanley and Others 1994; Whitworth and Others 1991; Camardese and Others 1990).

2.2.6 Mammals

Arsenic is a carcinogen, teratogen, and a possible mutagen. Adverse effects produced by arsenic are highly dose-dependent. At low levels, arsenic may be an essential nutrient and substitute for phosphorous in biochemical reactions (ATSDR 1993a). At high levels, however, arsenic is recognized as an effective poison. Chronic exposure to low levels of arsenic can produce malaise and fatigue, gastrointestinal distress, anemia and basophilic stippling, neuropathy, and skin lesions, which can develop into skin cancer. Water-soluble arsenic is absorbed efficiently from the gastrointestinal tract and circulated throughout the body. Trivalent arsenic is detoxified in the liver by conversion to methylarsenic acid and dimethylarsenic acid, which are the principal forms excreted in the urine. The body burden of arsenic can reach considerable levels, because it can be sequestered in nails, hair, bones, teeth, skin, liver, kidneys, and lungs (ATSDR 1993a). In mammalian species, arsenic is a teratogen that can pass the placental barrier and produce fetal death and malformations, consisting of exencephaly, eye defects, and renal and gonadal agenesis (Eisler 1988a; ATSDR 1993a; Domingo 1994).

2.3 BARIUM

Barium is an alkaline earth metal that is widely distributed in the environment and is used to produce alloys, paints, soap, paper, rubber, ceramics, and glass. Barium is naturally present in plant and animal tissue and may be an essential element in trace amounts.

The solubility of barium compounds influences adsorption and toxicity. Soluble barium compounds are more easily adsorbed by organisms compared to their lower soluble counterparts and may be accumulated in the skeleton (Amdur and Others 1991).

Barium is found mainly in inorganic complexes and is stable in the +2 valence state. Environmental conditions in soil, such as pH, Eh, cation exchange capacity, and calcium carbonate levels, will affect the movement of barium in the environment (ATSDR 1990a). In an aquatic environment, barium will most likely precipitate out of solution as a barium sulfate or barium carbonate or the barium ion will adsorb to particulate matter (ATSDR 1990a).

Barium can bioaccumulate in terrestrial and aquatic organisms (ATSDR 1990a), and marine plants can bioconcentrate barium by a factor of 1,000 times the concentration found in water. Marine animals, plankton, and brown algae have reported BCFs of 100, 120, and 260, respectively (ATSDR 1990a), and terrestrial plants bioconcentrate low levels of barium from the soil (ATSDR 1990a).

2.3.1 Plants

Some plants may accumulate barium from soil, for example, Brazil nuts can accumulate high levels of barium (Amdur and Others 1991; ATSDR 1990a).

Plants, probably in a manner similar to calcium and magnesium, easily take up soluble forms of barium, but barium is not readily translocated from roots to shoots (Peterson and Girling 1981). Barium has been reported to inhibit seed germination, enzyme activation, and uptake of calcium and magnesium by roots. Common symptoms are brown, retarded roots and stunted foliage (Romney and Childress 1965).

2.3.2 Invertebrates

No information was identified on the effects of barium on invertebrates.

2.3.3 Amphibians and Reptiles

No information was identified on the effects of barium on amphibians and reptiles.

2.3.4 Fish and Aquatic Organisms

Little information was identified on the effects of barium on fish and aquatic organisms. In the aquatic environment, the route for the transport of metals into fish is through the gill, gut, or skin (Pulsford and Others 1992). In one study, however, barium was observed to inhibit chlorine absorption in the intestine of winter flounder (Chamey and Taglietta 1992).

2.3.5 Birds

No information was identified on the effects of barium on birds.

2.3.6 Mammals

In addition to skeletal deposition, ingestion of barium salts can result in gastrointestinal distress, muscular paralysis, lowered pulse rate, muscle stimulation, and irregular cardiac contractions (Amdur and Others 1991). Rats exposed to barium concentrations in their diet showed toxic responses. In both acute and chronic oral exposure scenarios, increased blood pressure was observed in exposed rat populations (ATSDR 1990a). In other acute exposure studies, gastrointestinal effects and respiratory weakness were observed in exposed populations (ATSDR 1990a). Ovary weight and ovary-to-brain weight ratios both decreased as a result of acute, oral exposure to barium in rat populations (Borzelleca and Other 1988, as cited in ATSDR 1990a). Published data concerning developmental, reproductive, or carcinogenic effects of barium on mammalian species are very limited (ATSDR 1990a).

2.4 BERYLLIUM

In most types of soil, beryllium is expected to be tightly sorbed onto clay particles (ATSDR 1993b). Beryllium is expected to have limited mobility in soil, although its mobility may increase as a result of formation of soluble hydroxide complexes in soils of higher pH (Callahan and Others 1979, as cited in ATSDR 1993b).

In aquatic environments, most beryllium is usually present sorbed to suspended matter or to sediment, rather than in a dissolved form in the water column. Beryllium may precipitate into sediment as a result of a formation of insoluble complexes and usually is sorbed onto clay particles in sediment. A high percentage of beryllium is expected to be immobile in water as a result of this association with sediment particles, although at a high pH, the formation of water-soluble complexes with hydroxide ions may increase the solubility and mobility of beryllium (Callahan and Others 1979, as cited in ATSDR 1993b).

Bioconcentration of beryllium in fish is not likely because of the low absorption of beryllium from the water column by aquatic animals. Significant biomagnification of beryllium within the food chain has not been observed (ATSDR 1993b).

2.4.1 Plants

No information was identified on the effects of beryllium on plants.

2.4.2 Invertebrates

No information was identified on the effects of beryllium on invertebrates.

2.4.3 Amphibians and Reptiles

Very little information was available on the effects of beryllium on amphibians and reptiles. However, in a journal article, Jagoe and others (1993) suggest that the toxic effects of beryllium are similar to those by aluminum. In general, metals induce their toxic effects in the gill surface (skin) of amphibians. Reduced survival of adult populations of frogs and salamanders has been observed when the study organisms were chronically exposed to aluminum in the test water (Horne and Dunson 1995). In addition, aluminum exposure was shown to cause a significant increase in embryonic mortality (Horne and Dunson 1995).

2.4.4 Fish and Aquatic Organisms

Very little information was available on the effects of beryllium on fish and aquatic organisms. However, in a journal article, Jagoe and Others (1993) suggest that the toxic effects of beryllium are similar to those produced by aluminum. In general, metals induce their toxic effects in the gill surface of aquatic organisms. Like other metals, beryllium affects the physiological processes occurring at the gill surface, including ion regulation and gas exchange (Jagoe and Others 1993). At low concentrations, beryllium causes gill damage. At higher concentrations, effects include development of chloride cell apical crypts, increased mucus production, microridge loss, epithelial hyperplasia, and fusions of primary lamellae (Jagoe and Others 1993). Beryllium water concentrations were found to cause gill abnormalities and damage to the fish species studied (Jagoe and Others 1993).

2.4.5 Birds

No information was identified on the effects of beryllium on birds.

2.4.6 Mammals

The major toxicological effects of beryllium occur when the compound is inhaled from the air and beryllium is then deposited in the lungs of mammals. The mammals that were studied include mice, rats, rabbits, and monkeys. The toxicological effects of beryllium in the lung include pneumonitis, hypersensitivity, and chronic granulomatous pulmonary disease (Amdur and Others 1991).

2.5 CADMIUM

Cadmium is a naturally occurring element. It is used in the production of nickel-cadmium batteries, metal plating, pigments, plastics, synthetics, and alloys. Cadmium in soils may leach into water, especially under acidic conditions (Callahan and Others 1979; Elinder 1985, as cited in ATSDR 1999a), and cadmium-containing soil particles may be distributed into the air or eroded into water (ATSDR 1999a). In the aquatic environment, the bioavailability of cadmium depends on such factors as pH, redox potential, water hardness, and the presence of other complexing agents. The most bioavailable form of cadmium is the Cd^{2+} ion. An increase in temperature or salinity will increase the bioavailable form of cadmium and as a result, increase the bioaccumulation and toxicity of cadmium to aquatic organisms. A decrease in pH will increase the amount of cadmium ions in water and increase bioaccumulation in aquatic organisms (Sadiq 1992).

Cadmium has no essential biological function and is highly toxic to plants and animals. It is a carcinogen and teratogen and a suspected mutagen. Cadmium is associated with severe sublethal effects on reproduction at relatively low environmental concentrations (Eisler 1985a). Cadmium is bioconcentrated and bioaccumulated easily by aquatic and terrestrial organisms at all trophic levels (Eisler 1985a). Bioconcentration in fish depends on the pH and the organic content of the water (John and Others 1987, as cited in ATSDR 1999a). Although some data suggest that lower trophic levels display biomagnification of cadmium, available data, particularly for animals at the top of the food chain, are inconclusive (Beyer and Others 1996; Gochfield and Burger 1982, as cited in ATSDR 1999a).

2.5.1 Plants

Cadmium is known to be toxic to plants at much lower soil concentrations than other heavy metals. Plants more readily take up cadmium than other metals (EPA 1981) and as a result, some plants can accumulate high levels of cadmium in developing leaflets (Morishita and Boratynski 1992).

2.5.2 Invertebrates

Very little information was available concerning the effects of cadmium on invertebrates. Some insects can accumulate large quantities of cadmium without observable adverse effects (Jamil and Hussain 1992). Certain insects, such as caddis flies, can accumulate high levels of cadmium in their gill tissue (Sadiq 1992).

2.5.3 Amphibians and Reptiles

No information was identified concerning the effects of cadmium on amphibians and reptiles.

2.5.4 Fish and Aquatic Organisms

Marine organisms appear more resistant to cadmium than are freshwater organisms. Cadmium accumulates in the gill tissue of mussels, the digestive glands of scallops, and the liver and kidney of bony fish and sharks (Loring and Prosi 1986, Bryan and Gibbs 1973, and Grimanis and Others 1978, as cited in Sadiq 1992). In general, however, cadmium accumulates in the liver and kidney of fish (Sindayigaya and Others 1994; Sadiq 1992). Cadmium has been shown to be highly toxic in aquatic environments and has been implicated as the cause of deleterious effects on fish and aquatic organisms, including increased mortality, respiratory disruptions, altered enzyme levels, abnormal muscular contractions, reduced growth, and reduced reproduction (Eisler 1985a). Cadmium concentrations in water caused damage to the reproductive organs of fish, a decrease in the survival rate of fish embryos, and a reduction of growth rates of fry (EPA 1976). Crustaceans appear to be more sensitive to cadmium concentrations, compared with fish and mollusks (Sadiq 1992), and younger stages of aquatic life appear to be more sensitive to cadmium than adults (Sadiq 1992).

2.5.5 Birds

Sublethal effects in birds include growth retardation, nephrotoxicity, anemia, damage to the testicles and absorptive epithelium of the duodenum, reduced egg production, and effects on calcium absorption (Scheuhammer 1987).

2.5.6 Mammals

In mammalian species, cadmium concentrates in the liver and kidneys and is excreted in the urine at a very slow rate. The acute toxic effects of cadmium given orally include nausea, vomiting, salivation, diarrhea, and abdominal cramps. Immediate death may be caused by shock and dehydration; renal and cardiopulmonary failure may cause death a week or so after ingestion. Chronic toxicity effects of cadmium given orally to rats are decreased motor skills, peripheral neuropathy, weakness, and muscle atrophy. When inhaled, cadmium is a carcinogen that can produce tumors in the lung, trachea, and bronchus.

Cadmium is a known developmental toxin causing teratogenic and mutagenic effects. Parental doses of cadmium have been shown to decrease testosterone and produce adverse effects on the testes and prostate of test animals. Prenatal exposure to cadmium has fetotoxic effects, such as reduced fetal weights (ATSDR 1999a), and can cause adverse effects during development of the lung, brain, testes, eye, and palate (Domingo 1994). It is believed that small amounts of cadmium could affect embryonic deoxyribonucleic acid (DNA) and protein synthesis (Domingo 1994).

2.6 CHROMIUM

Chromium is a metal that is listed by EPA as one of 129 priority pollutants (Keith and Telliard 1979), and is considered to be one of the 14 most noxious heavy metals (Jenkins 1981).

Chromium also is listed among the 25 hazardous substances thought to pose the most significant potential threat to human health at priority Superfund sites (Department of Health and Human Services and EPA 1987). Chromium received special attention in studies of subsurface agricultural irrigation drainage waters of the San Joaquin Valley of California, because it was determined to be a "substance of definite concern" (Moore and Others 1990).

Chromium can exist in oxidation states ranging from -2 to +6, but is most frequently found in the environment in the trivalent and hexavalent oxidation states (Eisler 1986a). The trivalent and hexavalent forms are the most important, because the +2, +4, and +5 forms are unstable and are rapidly converted to +3, which is oxidized to +6 (Eisler 1986a). Chromium compounds are stable in the trivalent state and occur in nature in this state in ores such as ferrochromite. The hexavalent state is the second most stable state. Although hexavalent chromium rarely occurs naturally, it is produced from anthropogenic sources (ATSDR 1993c). Most of the hexavalent chromium in the environment is a result of domestic and industrial emissions. Interaction of hexavalent chromic oxide, dichromate, or chromate compounds with organic compounds can result in reduction to the comparatively less toxic trivalent form (Eisler 1986a). Hexavalent chromium is often in the form of chromates, dichromates, or chromic acid; most have a yellow color, and all are toxic (Grolier Electronic Publishing 1988; Meyers 1990). Both trivalent and hexavalent chromium occur as dissolved chromium (Hem 1989).

EPA regards all chromium compounds as toxic, although the most toxic and carcinogenic chromium compounds tend to be the strong oxidizing agents, with an oxidation state of +6 (Meyers 1990). Hexavalent chromium compounds tend to be strong oxidizers and are associated with cancer risk and kidney damage (Meyers 1990). Divalent and trivalent compounds of chromium often (not always) have a lower toxicity or biological hazard associated with them (Moore and Others 1990; Patnaik 1992). The hazards associated with chromium are highly related to chemical speciation (Long and Morgan 1990; Meyers 1990).

The toxic mechanism of action differs for hexavalent chromium as compared to trivalent chromium (Moore and Others 1990). Hexavalent chromium causes cellular damage through its role as a strong oxidizing agent, whereas trivalent chromium can inhibit various enzyme systems or react with organic molecules (Moore and Others 1990). Strong oxidizing agents can cause damage to DNA and many other tissue structures.

As in the case of other metals, the overall hazard presented by chromium may be partly related to the solubility of the specific form of chromium (Meyers 1990). Substances having a low solubility in water often are not as easily absorbed through the gastrointestinal tract, as are those substances with higher solubilities (Meyers 1990). Some hexavalent chromium compounds tend to be more toxic than the trivalent compounds, not only because the oxidizing potential is high, but because some of the hexavalent forms more easily penetrate biological membranes (Eisler 1986a). Trivalent chromium has low toxicity because of poor membrane permeability and noncorrosivity, while hexavalent chromium is highly toxic, because it possesses strong oxidizing characteristics and readily pushes through membranes (NRCC 1977; Hazardous Substances Database [HSDB] 1999).

Both trivalent and hexavalent chromium are significant from the standpoint of potential impacts to fish and wildlife (Eisler 1986a; Rompala and Others 1984). Most of the notoriety associated with chromium as a potentially harmful environmental contaminant, however, is caused by the toxic, carcinogenic, oxidizing agent and reproductive risk hazards of hexavalent chromium compounds (HSDB 1999; Patnaik 1992; Manahan 1992; Meyers 1990; Jones 1990).

Little is known about the relationship between concentrations of total chromium in the environment and biological effects on the organisms living there (Eisler 1986a). Depending on the physical and chemical state of the chromium, the same elemental concentration has a wide variety of mobilities and reactivates and therefore produces different effects (Eisler 1986a).

Certain hexavalent chromium compounds, when administered through inhalation at high doses, have the potential to induce lung tumors in humans and experimental animals (Jones 1990). However, at low levels of exposure, hexavalent chromium ions are reduced in epithelial lining fluid of the respiratory tract, blood, and other fluids, before the hexavalent ions can interact with DNA, unless the dose is sufficient to overwhelm the body's reduction capacity (Jones 1990).

Small amounts of trivalent chromium are considered to be essential in animals and humans (HSDB 1999). Trivalent chromium is an essential human and animal nutrient at levels of 50 to 200 micrograms per day (Jones 1990).

Trivalent chromium is the only form of chromium known to play a beneficial, biological role. The form must be supplied as a stable complex, because trivalent chromium exists as a relatively insoluble macromolecule at normal blood pH. The known biological effect of trivalent chromium is the maintenance of normal glucose tolerance (Moore and Others 1990).

Trivalent chromium is an essential element for fungi and vertebrates in general (HSDB 1999; Manahan 1992). Trivalent chromium is considered to be essential for glucose and lipid metabolism in mammals, and a deficiency of it produces symptoms of diabetes mellitus (Manahan 1992; HSDB 1999). Trivalent chromium is essential for the maintenance of normal glucose tolerance in animals and humans, and the factor or group of factors containing trivalent chromium (called glucose tolerance factor or "GTF") has been suggested to be responsible for this favorable action of chromium (HSDB 1999).

2.6.1 Plants

The greatest chromium hazard to plants is posed in acidic, sandy soil with low organic content (HSDB 1999). In plants, chromium interferes with uptake translocation, and accumulation by plant tops of calcium, potassium, magnesium, phosphorus, boron, and copper aggravates iron deficiency chlorosis by interfering with iron metabolism (HSDB 1999).

Chromium is not an essential element in plants. The hexavalent form is more soluble and available to plants than the trivalent form and is considered to be the more toxic form. In soils within a normal Eh and pH range, hexavalent chromium, a strong oxidant, is likely to be reduced

to the less-available trivalent chromium, although trivalent chromium may be oxidized to hexavalent chromium in the presence of oxidized manganese (Bartlett and James 1979). In nutrient solution, however, both trivalent and hexavalent chromium are taken up about equally by plants and are toxic to plants (McGrath 1982). Hexavalent chromium is more mobile in plants than trivalent chromium, but translocation varies with plant type. After plant uptake, chromium generally remains in the roots because of the many binding sites in the cell wall, particularly the trivalent chromium ions (Smith and Others 1989). Symptoms of toxicity include stunted growth, poorly developed roots, and leaf curling.

2.6.2 Invertebrates

Little information was identified on the effects of chromium on invertebrates. Polychaete worms, clams, crabs, and oysters have been shown to take up chromium; excess chromium in these species leads to decreased weight gain, increased oxygen consumption, impaired reproduction, and increased hematocrit (Moore and Others 1990).

2.6.3 Amphibians and Reptiles

No information was identified on the effects of chromium on amphibians and reptiles.

2.6.4 Fish and Aquatic Organisms

Chromium toxicity to aquatic biota is influenced significantly by abiotic variables such as water hardness, temperature, pH, and salinity. Biological factors, such as species, life stage, and potential differences in sensitivities of local populations, influence the susceptibility of the organisms to chromium toxicity.

It has been reported that freshwater fish seem to be relatively tolerant of chromium (EPA 1988; Flora and Others 1984).

Rainbow trout exposed to excessive hexavalent chromium developed severe gill damage, precipitated by hypertrophy and hyperplasis (Moore and Others 1990). Toxicity in aquatic species is known to be affected by water hardness, pH, temperature, species, and organism size (Moore and Others 1990). Hard water conditions promote the toxicity of hexavalent chromium (Moore and Others 1990).

2.6.5 Birds

No information was identified on the effects of chromium on birds.

2.6.6 Mammals

In mammals, trivalent chromium is an essential nutrient. Adequate trivalent chromium nutrition improves growth and longevity and, along with insulin, helps to maintain correct glucose, lipid, and protein metabolism (NRCC 1976; HSDB 1999). The biologically active form of chromium, called the GTF, is a complex of chromium, nicotinic acid, and possibly, amino acids (ATSDR 1993c).

Chromium is considered to be a significant potential threat to human health. However, in trace amounts, chromium is considered to be one of the least toxic elements, because normal stomach pH converts hexavalent chromium to trivalent chromium (Moore and Others 1990). One to two hundred times the normal, total body load of chromium usually can be tolerated in mammals without evidence of negative effects (Moore and Others 1990). The therapeutic dose to toxic dose ratio for trivalent chromium in rats has been calculated at about 1:10,000 (Moore and Others 1990).

Studies with mammals have suggested that trivalent chromium is not well absorbed from the intestinal tract. For example, rat studies have indicated that only a few percent of an oral chromium +3 dose crosses the intestinal wall, regardless of previous dietary history. However, in studies of small intestinal absorption in black ducks (*Anas rubripes*), Eastin and Others (Eisler1986a), measured equal rates of absorption of trivalent hexavalent chromium. Also, it was noted that the ionic form of chromium influenced the degree of its absorption, with anionic chromium complexes being better absorbed (Moore and Others 1990).

Although trivalent chromium is an essential nutrient, exposure to high levels through inhalation, ingestion, or dermal contact may cause some health effects (ATSDR 1993c). In general, the toxicity of trivalent chromium to mammals is low, because membrane permeability is poor and it is noncorrosive (Eisler 1986a). However, chromium deficiency is unknown, and too much chromium can be harmful to humans (American Medical Association 1989).

2.7 COPPER

Copper is a naturally occurring element that is widely distributed in the environment. Copper is the main component of alloys, which include brass, bronze, and gun metal. Copper is an essential trace mineral nutrient and a toxicant (ATSDR 1990b).

Copper is very mobile under oxidizing and acidic conditions and immobile in organic-rich and reducing environments. Adsorption increases with pH and higher organic matter content. In aquatic systems, copper binds primarily to organic matter and forms complexes with both organic and inorganic ligands (mainly with calcium carbonate) that settle out in sediments (Kirk-Othmer 1965). Under normal pH and redox conditions, copper tends to be present in sediments in the form of organic complexes and coprecipitates with iron and manganese oxides and cupric carbonate complexes.

Copper is an essential nutrient and is homeostatically controlled; therefore, biomagnification is not a significant fate process for copper. Bioaccumulated copper is stored in the liver, kidney, bone marrow, and hair (Talmage and Walton 1991). Fish can bioconcentrate copper, with BCFs ranging from the tens to the hundreds. Mollusks have BCFs for copper that range up to 30,000 (Perwack and Others 1980; Chapman and Others 1968; Raymont 1972).

2.7.1 Plants

Based on yield reductions of 14 to 28 percent in agronomic and grassland plants, 100 milligrams per kilogram (mg/kg) of total copper in the soil is considered to be a threshold concentration for toxicity to plants (International Copper Association [ICA] 1992).

Copper is a micronutrient essential for plant nutrition and is required as a cofactor for many enzymes. Furthermore, it is an essential part of a copper protein involved in photosynthesis. Root absorption appears to be passive, perhaps in organo-copper complexes (Jarvis and Whitehead 1983), and active through a specific carrier (Fernandes and Henriques 1991). When copper is adsorbed to cells in the root system, it may result in low-copper soils. The form in which copper is taken into the root affects its binding there (Wallace and Romney 1977). Copper can be transported in the xylem and phloem of plants complexed with amino acids.

The most common toxicity symptoms include reduced growth, poorly developed root systems, and leaf chlorosis (Wong and Bradshaw 1982). The basic deleterious effect of copper is related to the root system, where it interferes with enzyme functioning (Mukherji and Das Gupta 1972), but it also strongly interferes with photosynthesis and fatty acid synthesis (Smith and Others 1985).

2.7.2 Invertebrates

Copper is used as an ingredient in many fungicides and insecticides applied to agricultural crops (Meister 1995). Based on yield reductions of 14 to 28 percent in agronomic and grassland plants, 100 mg/kg of total copper in the soil is considered to be a threshold concentration for toxicity to soil invertebrates (ICA 1992).

2.7.3 Amphibians and Reptiles

Copper is highly toxic to amphibians. Environmental conditions, including pH and water hardness, and the life stage of the amphibian exposed affect the organism's sensitivity and adverse response to exposure to metal concentrations in water. Copper increased rates of mortality in environments with high-pH and low-hardness water (Horne and Dunson 1995). Although information concerning amphibians and metal toxicity is limited, it is believed that the primary mechanism of action of metal-induced toxicity and low pH environments is body loss of sodium across the gill surface (Horne and Dunson 1995). Tadpoles were affected adversely when exposed to aqueous copper concentrations (Owen 1981). Copper is toxic to certain types

of frogs and salamanders during both acute and chronic exposure studies, causing embryonic curling, body loss of sodium, and mortality (Horne and Dunson 1995). Earlier life stages of amphibians appear to be more sensitive to copper toxicity than later life stages (Horne and Dunson 1995).

No information was identified on the effects of copper in reptiles.

2.7.4 Fish and Aquatic Organisms

Copper is highly toxic in aquatic environments and is a priority pollutant (EPA 1992). Copper is toxic to many fish and aquatic organisms, including mussels, stripped bass, bluegill, and carp. Copper is mainly accumulated in the gill, liver, filaments, stomach, and intestine; however, the gill is the primary organ for concentrating copper in aquatic organisms (Owen 1981). Copper concentrations can significantly affect fish egg hatchability and reduce fry growth (EPA 1976). The age and species of organism influence the toxicity characteristics of copper. In general, younger organisms are affected at lower concentration levels.

2.7.5 Birds

Copper can produce toxic effects in birds. Diets containing elevated copper levels can slow the growth rate, diminish egg production, and cause developmental abnormalities in different avian species (Owen 1981).

2.7.6 Mammals

Toxic effects of copper have been studied on many animals, including cats, dogs, cattle, sheep, rats, mice, horses, guinea pigs, pigs, and monkeys. Different species of animals display varying levels of sensitivity to copper. However, the main organ affected by exposure to copper is the liver, where copper primarily accumulates in subcellular organelles, causing liver cirrhosis. In addition to liver cirrhosis, copper exposure can cause necrotic kidney tubules and brain damage (Owen 1981). Acute, toxic effects of copper given orally include gastrointestinal irritation, vomiting (including blood), low blood pressure, jaundice caused by liver necrosis, and coma. Chronic exposure to copper can cause accumulation of copper in the body, leading to lesions in the liver, brain, and eye and hemolytic anemia.

2.8 LEAD

Lead has been characterized as a poison for centuries and environmental pollution from lead is well documented (Eisler 1988b). Lead has been used in the production of solder, pipes, paint, ceramics, roofing materials, caulking, and ammunition and also was used as a gasoline additive. From a geochemical perspective, lead is ubiquitous and occurs in rocks, soils, water, plants, animals, and air. Lead is neither essential nor beneficial to living organisms, and all data show that the biological effects are adverse. Lead is a mutagen and a teratogen. When absorbed in excessive amounts, lead also is carcinogenic or cocarcinogenic, impairs reproduction, adversely

impairs liver and thyroid functions, and interferes with resistance to infectious disease (Eisler 1988b). In general, lead is toxic in most of its chemical forms and can be incorporated into the body through inhalation, ingestion, dermal absorption, and placental transfer. Lead is a poison that accumulates in the body and upon reaching a certain level, it starts to affect behavior, as well as hematopoietic, vascular, nervous, renal, and reproductive systems (Eisler 1988b).

The biological availability and fate of lead in soil is affected by such factors as soil pH, organic content, ion-exchange characteristics, and the amount of lead in the soil (National Science Foundation 1977, as cited in ATSDR 1999b). Plants and animals may bioconcentrate and bioaccumulate lead; however, biomagnification has not been well documented. Several studies have shown that invertebrates can accumulate lead in their tissues; however, the variability in the extent of lead bioaccumulation suggests that the mechanisms of lead uptake range between species. Organolead compounds, such as trialkyl and tetraalkyl lead compounds are more toxic than inorganic forms and have been shown to bioconcentrate in aquatic organisms. High accumulations of lead from ambient seawater by marine plants are well documented. Although lead is bioconcentrated from water, little evidence suggests that it is transferred through the food chain (Wong and Others 1978, Branica and Konrad 1980, and Settle and Patterson 1980, as cited in Eisler 1988b). Lead concentrations tend to decrease with increasing trophic level in food chains in freshwater and marine habitats (Wong and Others 1978 and Stewart and Schulz-Baldes 1976, as cited in Eisler 1988b).

2.8.1 Plants

Lead is not essential for plants, and excessive amounts can cause growth inhibition as well as a reduction in photosynthesis, mitosis, and water absorption (Demayo and Others 1982, as cited in Eisler 1988b). Roots take up lead passively, and translocation to shoots is limited (Wallace and Romney 1977). It is bound to the outside of roots, in the apoplast, and in cell walls and organelles or absorbing roots (Koeppe 1981). In the plant, lead may exist in a naturally chelated form or in pyro- or orthophosphate forms. The phytotoxicity of lead is relatively low compared with other trace elements. It affects mitochondrial respiration and photosynthesis by disturbing electron transfer reactions (Miles and Others 1972).

2.8.2 Invertebrates

A concentration of 12,800 mg/kg of lead in soil is associated with reductions in natural populations of decomposers such as fungi, earthworms, and arthropods (Beyer and Anderson 1985, as cited in Eisler 1988b).

2.8.3 Amphibians and Reptiles

Environmental conditions, including pH and water hardness, and the life stage of the amphibian exposed, affect the organism's sensitivity and adverse response to exposure to metal concentrations in water. Although information concerning amphibians and metal toxicity is limited, the primary mechanism of action of metal-induced toxicity in low pH environments is believed to be body loss of sodium across the gill surface (MacDonald and Wood 1993, as cited

in Horne and Dunson 1995). Reduced rates of learning acquisition and retention were observed in tadpoles exposed to lead water concentrations. Limited evidence has been published on the effects of lead in amphibians; however, lead may be important as a toxicant to developing embryos (Horne and Dunson 1995).

2.8.4 Fish and Aquatic Organisms

Lead is toxic to most aquatic organisms; however, adverse effects are modified by environmental conditions. Fish continuously exposed to toxic concentrations of dissolved lead show various signs of poisoning, including spinal curvature, anemia, degeneration of the caudal fin, destruction of spinal neurons, reduced ability to swim against a current, destruction of the respiratory epithelium, muscular atrophy, paralysis, renal pathology, growth inhibition, retardation of sexual maturity, testicular and ovarian histopathology, decreased fry survival rate, and death (Eisler 1988b; EPA 1976).

2.8.5 Birds

Absorbed lead produces a variety of effects in avian species, including damage to the nervous system, muscular paralysis, inhibition of heme synthesis, damage to kidneys, damage to the liver, and death (Mudge 1983, as cited in Eisler 1988b). Sublethal lead exposure also may have adverse effects of reproduction in some avian species by decreasing plasma calcium, inhibition of growth, and reduced chick hatchability.

2.8.6 Mammals

Lead can have multiple effects in mammalian species. Lead may cause damage to the nervous system, hematological effects, kidney dysfunction, sterility, abortion, neonatal mortality, growth retardation, delays in maturation, and reduced body weight (Amdur and Others 1991; Eisler 1988b). Younger mammals may have greater sensitivity to lead toxicity because of their developing blood brain barrier. Developing capillaries in the brain allow lead levels in the blood to be transported to newly formed components of the brain (Amdur and Others 1991).

2.9 MERCURY

Inorganic and organic forms of mercury are relatively well characterized within an ecotoxicological context. Methyl-mercury and other organomercurical compounds (including ethyl- and phenyl-mercuricals) are among the most toxic organometals in the environment and bioaccumulate through the food chain (Fimreite 1979). The chemical form of mercury influences its distribution in the body, and comparative toxicity data suggest that the organic species (ethyl-, methyl-, and phenyl-mercury) of the metal are far more toxic than inorganic mercury (Peterle 1991). In general, methyl-mercury, as well as its metallic (Hg^0), mercurous (Hg^+), and mercuric (Hg^{++}) forms, are nonessential and exert their toxicity at the biochemical level as inhibitors of enzyme-catalyzed reactions.

Mercury is a known mutagen, teratogen, and carcinogen. Its toxicity and environmental effects vary with its form, dose, and route of ingestion and with the species, sex, age, and general condition of the organism (Eisler 1987a; Fimreite 1979). Depending on the pH, salt content, and composition of the soil, mercury usually forms various complexes with chloride and hydroxide ions in the soil (Alloway 1990).

Biotransformation is an important fate process in the environmental partitioning of mercury. Under favorable conditions, microorganisms in soil and sediment can convert various forms of mercury to methyl-mercury, which is more available for uptake by various organisms and for transport in the food chain and more mobile than inorganic forms (Peterle 1991).

Mercury has a high potential for bioaccumulation and biomagnification (Eisler 1987a). Methylated mercury is the form most readily bioconcentrated and bioaccumulated (Kramer and Neidhart 1975). Biomagnification of methyl-mercury has been documented for both aquatic and terrestrial food chains (Eisler 1987a). Concentrations of methyl-mercury in upper trophic-level fish reportedly have been biomagnified on the order of 10,000 to 100,000 times those concentrations found in ambient waters (Callahan and Others 1979). The accumulation of mercury by aquatic organisms is enhanced at elevated water temperatures, reduced water salinity or hardness, reduced water pH, increased age of the organism, and reduced organic matter in the medium. Mercury transfers and biomagnification through mammalian food chains is well documented.

2.9.1 Plants

Plants take up mercury from the soil in relatively insignificant amounts because roots appear to act as a barrier. However, mercury compounds applied to other parts of plants appear to be readily absorbed and translocated (Adriano 1986).

Mercury and its compounds taken up by roots are translocated to only a limited extent in plants. Organic forms of mercury may be translocated to a greater degree than inorganic forms in some plants (Huckabee and Blaylock 1973). Gay (1975) reports that pea plants (*Pisum sativum*) form methyl-mercury as an intermediate product from mercury added to the soil in organic and inorganic forms.

2.9.2 Invertebrates

Some types of invertebrates can accumulate mercury through the food chain with little or no observable effects (Jamil and Hussain 1992). In certain types of flies, however, methyl-mercury can alter chromosomes, causing abnormalities in offspring (NAS 1978 and Khera 1979, as cited in Eisler 1987a). Mercury concentrations in soil have been observed to cause reduced segment regeneration in worms, and at elevated levels, mortality (Abbasi and Soni 1983, as cited in Eisler 1987a). For marine invertebrates, mercury was observed to inhibit reproduction (Eisler 1987a).

2.9.3 Amphibians and Reptiles

Little information was identified on the effects of mercury on amphibians and reptiles. In one study, frogs did not metamorphose when exposed to mercury concentrations (Eisler 1987a).

2.9.4 Fish and Aquatic Organisms

Methyl-mercury appears to be the most toxic form of mercury (MacDonald 1993). Earlier developmental stages of fish and aquatic organisms are more sensitive to mercury toxicity than more mature individuals. Effects of chronically exposed fish and aquatic organisms include loss of appetite, brain lesions, cataracts, abnormal motor coordination, and behavioral changes. In addition to chronic symptoms of mercury toxicity, mercury at comparatively low concentrations adversely affects reproduction, growth, behavior, metabolism, blood chemistry, osmoregulation, and oxygen exchange of marine and freshwater organisms (Eisler 1987a). Mercury is very toxic to aquatic organisms because of its ability to bind to sulphydryl groups (Sindayigaya and Others 1994). Degree of toxicity is increased in elevated water temperatures and in reduced salinity environments (Eisler 1987a).

2.9.5 Birds

Sublethal effects of mercury on birds, administered by a variety of routes, include adverse effects on growth, development, reproduction, blood and tissue chemistry, metabolism, and behavior (Eisler 1987a). Reproductive effects are noted at low doses long before acute effects are noticeable in exposed adult populations (Scheuhammer 1987). Significant reproductive effects of chronic dietary inorganic mercury exposure in birds include delayed testicular development, altered mating behavior, reduced fertility, reduced survivability and growth in young, and gonadal atresia. Mercury also is transferred to the egg in avian species, where it has adverse effects on the developing embryo (Peterle 1991).

2.9.6 Mammals

Methyl-mercury is the more acutely toxic form of mercury. Mercury can cause adverse neurological, renal, behavioral, and reproductive effects in mammals. Nephrotoxicity is the most common effect mercury has on mammals. Acute toxicity responses to the organic form of the metal include ataxia, aphagia, tremors, and diminished capacities for coordinated movements. In chronic exposures, methyl-mercury intoxication is characterized by central nervous system and peripheral nervous system neuropathies (Linstrom and Others 1991, as cited in ATSDR 1994a). Methyl-mercury also exhibits reproductive effects in both sexes as well as in the developing embryo and fetus (Cagiano and Others 1990). Methyl-mercury can cause other reproductive effects, which include diminished neurological function and behavioral deficits in newborns (Khera and Tabacova 1973).

2.10 SELENIUM

Selenium is an essential trace element but is harmful at concentrations only slightly higher than the nutritional requirement (Eisler 1985b). Results of laboratory studies and field investigations with fish, mammals, and birds have led to general agreement that elevated concentrations of selenium in diet or water are associated with reproductive abnormalities and growth retardation. Not as extensively documented, are reports of selenium-induced chromosomal aberrations, intestinal lesions, shifts in species composition of freshwater algal communities, swimming impairment of protozoa, and behavioral modifications (Eisler 1985b).

In aerobic waters, selenium is present in the quadravalent oxidation state as selenite or in the hexavalent oxidation state as selenate. These chemical species are very soluble, and most of the selenium discharged into the aquatic environment is transported in these forms to the ocean. Selenium has a sorptive affinity for hydrous metals oxides, clays, and organic materials. Sorption by sediments or suspended solids can result in enrichment of selenium concentrations in sediment beds. Sorption or precipitation with hydrous iron oxides is probably the major control on mobility of selenium in aerobic waters. Selenium can be methylated by a variety of organisms, including benthic microflora. In a reducing environment, hydrogen selenide may be formed. Both the methylated forms and hydrogen selenide are volatile and may escape to the atmosphere. Formation of volatile selenium compounds in the sediments can remobilize sorbed selenium (Eisler 1985b).

Current understanding of selenium toxicology indicates that ecological effects are primarily caused by selenium in the food chain, rather than selenium dissolved in the water column (Philips 1988, Luoma and Others 1992, as cited in Taylor and Others 1992). Once in the water column, selenium enters the food chain through bioconcentration by phytoplankton, which are then consumed in large quantities by crustaceans and bivalves. Fish and waterfowl, in turn, eat crustaceans and bivalves. Bioconcentration, bioaccumulation, and biomagnification of selenium can increase selenium levels more than 1,000-fold from water to fish and animals (Saiki and Lowe 1987, as cited in Taylor and Others 1992). The greatest step increase occurs between water and phytoplankton and other aquatic plants; subsequent steps in the food chain typically increase selenium concentrations by a factor of 2 to 6 (Lemly and Smith 1987, as cited in Taylor and Others 1992). BCFs for various species of marine algae range from 16,000 to 337,000, depending on the species and water column levels (Zhang and Others 1990, as cited in Taylor and Others 1992).

2.10.1 Plants

Selenium has been observed to cause growth retardation in freshwater green algae (Hutchinson and Stokes 1975, Klaverkamp and Others 1983, as cited in Eisler 1985b).

Selenium is not proven to be essential for plant growth. Plants absorb selenium as selenite, selenate, or an organic form of selenium. Generally, the selenate form is the most toxic. It is believed that selenate is taken up actively, while selenite uptake is largely passive (Peterson and Girling 1981). Selenium is translocated to all parts of the plant, including the see, in low-

molecular-weight compounds (Broyer and Others 1972). Toxicity symptoms include chlorosis, stunting, and yellowing of the leaves. The mechanism of toxicity is thought to be indiscriminate replacement of sulphur by selenium in proteins and nucleic acids, with disruptions in metabolism (Trelease and Others 1960).

2.10.2 Invertebrates

No information was identified on the adverse effects of selenium on invertebrates.

2.10.3 Amphibians and Reptiles

Little information was identified on the effects of selenium on amphibians and reptiles. One report states that during frog development, cranial and vertebral deformities and lower survival were documented when exposed to selenium concentrations (Browne and Dumont 1979, as cited in Eisler 1985b).

2.10.4 Fish and Aquatic Organisms

In general, selenite is more toxic to earlier life stages, and the degree of the effect is increased with increasing temperatures (Klaverkamp and Others 1983, as cited in Eisler 1985b). Selenium is teratogenic, and its toxicity depends greatly on its chemical form (Eisler 1985b). It has been suggested that selenite is more toxic than selenate and is preferentially concentrated over selenate by mussels (EPA 1990, as cited in Eisler 1985b). Signs of selenium poisoning include loss of equilibrium, lethargy, loss of coordination, muscle spasms, protruding eyes, swollen abdomen, liver degeneration and swelling, reduced blood hemoglobin levels, increased white blood cell numbers, swollen gill lamella with extensive cellular vacuolization, and necrotic and degenerating ovarian follicles (Ellis and Others 1937, Sorenson 1984, as cited in Eisler 1985b). Elevated concentrations of selenium were observed to cause reproductive failure, anemia, reduced hatch, reduced growth, reduced swimming rate, and chromosomal aberrations in aquatic organisms (Hodson and Others 1980, Adams 1976, Bovee and O'Brien 1982, and Krishnaja and Rege 1982, as cited in Eisler 1985b).

2.10.5 Birds

Selenium exposure in the diet or drinking water of avian species is associated with reproductive abnormalities, congenital malformations, selective bioaccumulation, and growth retardation (Eisler 1985b). Selenium has been observed to cause reduced hatching of eggs, decreased egg weight, decreased egg production, anemia, and embryo deformation, including deformed eyes, beaks, wings, and feet (Ort and Latshaw 1978 and Harr 1979, as cited in Eisler 1985b).

2.10.6 Mammals

Chronic effects of selenium on mammals include reproductive abnormalities such as congenital malformations; reduced numbers of young in litters; high mortality of young; infertility among

surviving young in rats, mice, swine, and cattle; and intestinal lesions (Harr 1978 and National Center for Research Resources [NCRR] 1983, as cited in Eisler 1985b).

Chronic exposure of selenium, known as alkali disease, has been observed in cattle, hogs, and horses that graze on feed containing elevated levels of selenium. Adverse effects include deformed hooves; hair loss; lassitude; articular cartilage erosion; reduced conception; increased reabsorption of fetuses; and heart, kidney, and liver degeneration (Eisler 1985b).

2.11 ZINC

Zinc is an essential trace element for all living organisms, and zinc deficiency can be a problem for both plants and animals. Zinc is primarily used as a protective coating for metals and in the production of alloys, such as bronze and brass. Adverse effects of zinc exposure to animals include growth retardation, testicular atrophy, skin changes, and poor appetite (Prasad 1979, as cited in Eisler 1993). Most of the zinc introduced into aquatic environments eventually is partitioned into sediment. Zinc released from sediment is enhanced under conditions of high dissolved oxygen, low salinity, and low pH. Dissolved zinc usually consists of the hydrated zinc ion and various organic and inorganic complexes. In reducing conditions, organically bound zinc typically forms insoluble sulfides (MacDonald 1993).

BCFs vary widely between and within species of aquatic organisms (Eisler 1993). In marine environments, the most effective zinc accumulators included red and brown algae, ostreid and crassotreid oysters, and scallops. Invertebrates can bioaccumulate large quantities of zinc (Jamil and Hussein 1992), which potentially could be passed on to upper trophic-level consumers. Studies show that bony structures can act as long-term repositories for zinc (Macapinlac and Others 1966). Zinc concentrations have been shown to increase with increasing trophic levels from phytoplankton to zooplankton but not to fish (Balasubramanian and Others 1995).

2.11.1 Plants

Zinc is an essential nutrient for plant growth in small amounts but is toxic to plants at elevated levels. Zinc can cause significant adverse effects on growth, survival, and reproduction in representative sensitive species of aquatic plants (Eisler 1993). Elevated levels of zinc in soil can cause mortality in some terrestrial plants and inhibit photosynthesis in others (Eisler 1993).

2.11.2 Invertebrates

Certain terrestrial and aquatic invertebrates are sensitive to zinc. Reduced growth, inhibited reproduction, and reduced survival are effects that zinc can have on both terrestrial and aquatic invertebrates (Eisler 1993).

2.11.3 Amphibians and Reptiles

Environmental conditions, including pH and water hardness, and the life stage of the amphibian exposed both affect the organism's sensitivity and adverse response to exposure to metal concentrations in water. Although information concerning amphibians and metal toxicity is limited, the primary mechanism of action of metal-induced toxicity and low pH environments is believed to be body loss of sodium across the gill surface (MacDonald and Wood 1993, as cited in Horne and Dunson 1995). In one study, no significant effects occurred of acute and chronic exposures of frogs and salamanders and their larvae to zinc (Horne and Dunson 1995). In addition, the pH of the aquatic environment had no effect on the toxicity of zinc, unlike the other metals that were studied (Horne and Dunson 1995).

However, another study observed that zinc caused significant adverse effects on growth, survival, and reproduction in representative sensitive species of amphibians (Eisler 1993). In this study, zinc was shown to cause teratogenic effects to frog embryos (Eisler 1993).

2.11.4 Fish and Aquatic Organisms

The gill epithelium is the primary route of zinc entry into the body of fish (Eisler 1993). Zinc can cause significant adverse effects on growth, survival, and reproduction in representative, sensitive species of protozoa, sponges, mollusks, crustaceans, echinoderms, and fish (Eisler 1993). Zinc has been shown to cause teratogenic effects to fish embryos (Eisler 1993).

2.11.5 Birds

Different species of birds have varying sensitivities to zinc exposure. Acute effects of zinc in ducks caused mortality and pancreatic degradation (Eisler 1993). Reduced growth and death were observed in poultry chicks fed diets containing elevated zinc levels. Younger stages of life appear to be more sensitive to zinc exposure. The pancreas and bone are primary target organs of zinc in birds (Eisler 1993). Decreased weight gain was observed in Japanese quail, chickens, and turkeys fed diets containing zinc (NAS 1980).

2.11.6 Mammals

Zinc is relatively nontoxic in mammals; however, excessive zinc intake adversely affects survival of all tested mammals and produces a wide variety of neurological, hematological, immunological, hepatic, renal, cardiovascular, developmental, and genotoxic effects (Eisler 1993). The pancreas and bone are primary target organs of zinc exposure in mammals (Eisler 1993). Toxic effects of zinc can be observed in many domestic animals, including dogs, cats, ferrets, cattle, sheep, and horses, as a result of ingesting zinc-containing objects (Eisler 1993). Zinc concentrations in the diet of pregnant rats and sheep caused increased incidence of hypocuprosis, still births, and fetal resorptions (Ketchenson and Others 1969, Campbell and Mill 1979, as cited in Domingo 1994).

3.0 PESTICIDES

The following sections present data on ecotoxicological effects of various chlorinated pesticides identified as COPECs at Alameda Point.

3.1 CHLORDANE (ALPHA AND GAMMA)

Chlordane is a broad-spectrum, organochlorine pesticide, consisting of about 45 components. Historically used to control soil invertebrate pests, chlordane also adversely affected nontarget species. Although federal law currently prohibits use of chlordane in the United States, persistent chlordane residues and metabolites from past use continue to pose an ecological threat (Eisler 1990). Chlordane and its metabolites do not degrade to any significant extent either biotically or abiotically in either aquatic or terrestrial ecosystems. Chlordane in water does not undergo considerable hydrolysis, oxidation, or photolysis, and biodegradation is minimal (Gore and Others 1971, as cited in HSDB 1999). Because of chlordane's low water solubility, high lipid solubility, low vapor pressure, and strong tendency to sorb to soil and sediment particles, it persists in soil and sediments for extended periods (EPA 1988, as cited in Eisler 1990). Sorption of chlordane to sediment is expected to be a major aquatic fate process (Callahan and Others 1979, as cited in HSDB 1999).

Based on field tests, soil column leaching tests, and K_{oc} estimation, chlordane is expected to be immobile in soil (Cohen 1986, as cited in HSDB 1999). Surface-applied chlordane usually remains in the top 20 centimeters of most soils. Little biodegradation occurs in soil; chlordane residues have been detected in soils 14 years (EPA 1988, as cited in Eisler 1990) and 20 years (Beeman and Matsumura 1981, as cited in ATSDR 1994a) after application. Volatilization is the most important pathway for chlordane release from the surface of soil (ATSDR 1994a).

Chlordane is known to bioconcentrate, particularly in long-lived, carnivorous organisms having large amounts of body lipids (Eisler 1990). Chlordane bioconcentration has been shown to increase with trophic levels from zooplankton to marine mammals in marine ecosystems, causing biomagnification of total chlordane through the food chain, with residues peaking in marine mammals (Kawano and Others 1986). Chlordane biomagnification in carnivorous birds is also considerable.

3.1.1 Plants

Chlordane residues have been detected in vegetable crops grown in soils treated with chlordane (U.S. Department of Agriculture 1965, as cited in HSDB 1999). Chlordane is taken up by rooted, aquatic vascular plants, both from water and sediment. Chlordane bioconcentrates in roots and is translocated to shoots (ATSDR 1994a).

3.1.2 Invertebrates

Chlordane is toxic to terrestrial invertebrates. Chlordane was used extensively to control grubs, ants, and snails (Eisler 1990). Earthworms were nontarget soil species that were adversely affected by chlordane. Sediment concentrations of chlordane were fatal to sandworms (*Nereis virens*) in 12 days (McLeese and Others 1982, as cited in Eisler 1990). Chlordane effects decreased with increasing soil temperature and organic content (NRCC 1975, as cited in Eisler 1990).

3.1.3 Amphibians and Reptiles

Symptoms of chlordane poisoning in frogs include neuromuscular changes, excessive thrashing, and tremors (Kaplan and Overpeck 1964, as cited in Power and Others 1989). California newts had greatly elevated chlordane residues in the liver, as compared to the stomach and carcass.

3.1.4 Fish and Aquatic Organisms

Chlordane adversely affects survival, reproduction, and growth in aquatic invertebrates and fish. Symptoms of poisoning in fish include hyperexcitability, increased respiration rate, erratic swimming, loss of equilibrium, and convulsions (Eisler 1990). Other symptoms recorded were immobilization, impaired reproduction, and histopathology (NRCC 1975, as cited in Eisler 1990).

3.1.5 Birds

Lethal effects of chlordane in birds result primarily from chlordane metabolites, most notably oxychlordane and heptachlor epoxide; oxychlordane is the most toxic and persistent of the two (Eisler 1990). Reproductive impairment has been documented in waterfowl species from a wetland treated with chlordane. Organisms metabolize chlordane into several isomers, of which oxychlordane is the most toxic and persistent, even when compared to its parent chemicals (World Health Organization [WHO] 1984, as cited in Eisler 1990; Kawano and Others 1986). These isomers can persist in avian tissues for up to 35.4 years (Eisler 1990). Chlordane interacts with other chemicals to cause additive or synergistic effects, particularly when combined with other organochlorines, such as endrin, methoxychlor, and aldrin, in northern bobwhites (Ludke 1976, as cited in Eisler 1990). Symptoms of poisoning include sluggishness, drooped eyelids, fluffed feathers, reduced food intake, and weight loss (Eisler 1990).

3.1.6 Mammals

Warm-blooded animals readily absorb chlordane through dermal contact, ingestion, and inhalation, and after residues are absorbed, they concentrate in the fat, liver, kidney, brain, and muscle (WHO 1984, as cited in Eisler 1990). Chlordane is a nerve stimulant whose physiological target sites are nerve and muscle membranes (Greenhalgh 1986, as cited in Eisler 1990). Chronic, dietary chlordane adversely affects physiology, growth, and fertility of

laboratory mammals, including enlargement and increased pathology of the liver in rats and mice. It also elevates residues in cow's milk, reduces sexual activity and litter viability in rats, depresses growth, delayes development, decreases immune competence, and decreases viability of offspring in mice (Talamantes and Jang 1977, WHO 1984, as cited in Eisler 1990). Chlordane interacts with other chemicals to cause additive or synergistic effects, particularly when combined with other organochlorines such as endrin, methoxychlor, and aldrin in mice (Klaassen and Others 1986, as cited in Eisler 1990).

3.2 DICHLORODIPHENYLTRICHLOROETHANE AND METABOLITES

Historically, dichlorodiphenyltrichloroethane (DDT) and related organochlorine insecticides were used worldwide in pest control. In 1972, DDT was banned in the United States, because DDT was highly toxic to nontarget species. DDT generally occurs as a constituent of a mixture of chlorinated, organic compounds, two of the most important being dichlorodiphenyldichloroethene (DDE) and dichlorodiphenyldichloroethane (DDD). DDE and DDD are also metabolites of DDT. All three have similar fate and transport properties. DDT, like many organochlorine contaminants, is characterized by its persistence in the environment, potential for volatilization and transport to unaffected areas, lipophilic nature, toxicity of metabolites, and variability of species responses to chronic exposure to DDT and its metabolites (Peterle 1991). DDT, DDE, and DDD are only slightly soluble in water and adhere to soil and sediment particles (Thibodeaux 1979). DDT and related organochlorine chemicals are slowly biodegraded in soil and in aquatic ecosystems (Alexander 1965, as cited in Forsyth and Others 1983). These chlorinated hydrocarbons tend to be highly persistent in soil and often have half-life estimates of greater than 15 years (Lichtenstein and Others 1959, Stewart and Others 1971, as cited in ATSDR 1992c).

In addition to their relatively long half-life, organochlorine chemicals like DDT are highly lipophilic and as a result, DDT and similar chemicals have very high BCFs. Biomagnification also has been observed for DDT and its metabolites (Bevenue 1976, as cited in Forsyth and Others 1983). The biomagnification of DDT (and related organochlorine pesticides) has been well documented (Hoffman and Others 1995), and the deleterious effects associated with trophic level transfer in both aquatic and terrestrial food chains remains a concern (EPA 1995a). DDT is most widely known for its reproductive effects on birds, primarily piscivorous species, and for its toxicity to aquatic fish and invertebrates.

3.2.1 Plants

Terrestrial plants can accumulate elevated levels of DDT (Forsyth and Others 1983). DDT can reduce photosynthesis in plants and reduce the ability of the plant to withstand environmental changes. In addition, DDT can decrease the amount of oxygen produced by aquatic plants (EPA 1975).

3.2.2 Invertebrates

DDT was once used as an insecticide. Once invertebrates have adapted to DDT, they can accumulate it at high levels (Forsyth and Others 1983). DDT can cause immobilization, reproductive impairment, embryo deformation, reduced growth, and mortality in both terrestrial and aquatic invertebrates (EPA 1975).

3.2.3 Amphibians and Reptiles

DDT has been observed to cause developmental deformities and hyperactivity in tadpoles (Osborn and Others 1981). DDT causes developmental deformities by disrupting the organization of epithelial cells into glands. This can cause blunt snouts and deformed brains in exposed tadpoles (Osborn and Others 1981).

3.2.4 Fish and Aquatic Organisms

DDT is very toxic to fish and aquatic organisms. Even at very low concentrations, DDT can cause mortality. In fish, DDT inhibits ATPase activity in cellular synthesis and osmoregulation (EPA 1975). DDT affects thyroid activity, alters behavior and activity, affects learning processes, causes developmental defects, and disrupts cellular energy use in fish (EPA 1975). DDT also adversely affects the reproductive success of fish because of its chemical characteristics that allow DDT to become concentrated in the egg yolk. When this happens, developing fry feed on the DDT-containing yolk, eventually causing increased fry mortality after birth (EPA 1975).

3.2.5 Birds

Reproductive effects of DDT and its metabolites on birds have been well characterized. Organochlorines, including DDT, have been implicated in the thinning of eggshells of at least 54 species of 10 orders of birds (Stickel 1975, as cited in Peterle 1991). DDT is believed to affect the calcium transport and deposition from the female to the egg, resulting in eggshell thinning. In addition to eggshell thinning other birds treated with DDE showed delayed egg laying, reduced hatchability, and alteration of egg size, weight, and content (Vangilder and Peterle 1980, 1981, and 1983, as cited in Peterle 1991).

3.2.6 Mammals

Low levels of exposure to DDT and organochlorines have caused reproductive effects in mink, bats, shrews, and sea lions (Peterle 1991). In several animal species, acute, oral exposure to high doses of DDT has been associated with DDT-induced tremors or myoclonus (abrupt, involuntary contractions of skeletal muscles), hyperexcitability, convulsions, and reduced fertility (EPA 1975). Chronic exposure of experimental animals to DDT is associated with tremors and hyperirritability. DDT-induced developmental effects include decreased fetal body weight, decreased fetal brain and kidney weight, embryotoxicity, fetotoxicity, and neonatal mortality.

Reproductive effects of chronic exposure produced abortions, stillbirths, increased maternal and fetal mortality, delayed estrus, a reduction in male libido, and a lack of mammary gland development.

3.3 HEPTACHLOR AND HEPTACHLOR EPOXIDE

Heptachlor is a persistent insecticide that is nonphytotoxic at insecticidal concentrations. Heptachlor was used extensively from 1953 to 1974 as a soil and seed treatment, protecting a variety of crops from pests, and also was used to control termites and household insects. EPA proposed cancellation of nearly all registered uses of heptachlor in 1974 because of its potential cancer risk, persistence, and potential to bioaccumulate and biomagnify throughout the food chain. In the United States, heptachlor use was stopped in 1983 (Beyer and Others 1996). The only commercial use of heptachlor products still permitted today is fire ant control in power transformers. Heptachlor epoxide is a breakdown product of heptachlor and is a metabolic product in bacteria and animals.

3.3.1 Plants

No information was identified on the effects of heptachlor on plants.

3.3.2 Invertebrates

Heptachlor was used as an insecticide to control soil pests (Beyer and Others 1996).

3.3.3 Amphibians and Reptiles

In amphibians, heptachlor was observed to be moderately toxic to tadpoles (Sanders 1970, as cited in Power and Others 1989).

In reptiles, heptachlor has been observed to cause mortality in snakes, aquatic turtles, box turtles, and lizards (DeWitt and George 1960, Matschke 1961, as cited in Hall 1980).

3.3.4 Fish and Aquatic Organisms

Low levels of heptachlor affect carbohydrate metabolism, osmoregulation, and hemostatic mechanisms in fish (Srivastava and Mishra 1987).

3.3.5 Birds

Effects of heptachlor have been documented on several species of birds, including Canada geese, American kestrels, and Japanese quail. Heptachlor has been known to decrease reproductive success in birds and decrease chick survival rates (Blus and Others 1984, Henny and Others 1983, and Grolleau and Froux 1973, as cited in Beyer and Others 1996).

3.3.6 Mammals

Heptachlor is absorbed from the gastrointestinal tract of animals, as indicated by the presence of heptachlor or its metabolites in serum, fat, liver, kidney, and muscle after oral exposure. Animal studies have shown that heptachlor undergoes epoxidation, producing heptachlor epoxide, which is more toxic than its parent compound. Hyperexcitability, incoordination, paralysis of the hind legs, difficulty in walking or standing, loss of the righting reflex, whole-body tremors, and self-mutilation are some of the reactions observed in a variety of animals after ingesting heptachlor. Ingestion of heptachlor also seemed to cause a severe decrease in the pregnancy rate of rats. There is evidence of transplacental, as well as lactational, transfer to human fetuses. The majority of the heptachlor and its metabolites are eliminated through bile into feces (ATSDR 1993i).

4.0 POLYCHLORINATED BIPHENYLS

PCB, or Aroclors®, are among the most persistent anthropogenic compounds in the environment, resisting degradation for years. This family of compounds contains 209 individual congeners. PCBs have been widely used as coolants and lubricants because of their insulating and nonflammable properties. PCB manufacturing was halted in 1977 because of its ability to bioaccumulate in the environment and adversely affect wildlife.

PCBs remain in the environment for long periods of time, because physiochemical properties of PCBs allow them to resist environmental degradation processes. The degree of chlorination and the position of chlorine substituents of PCBs influence their susceptibility to environmental degradation processes. Because of their physicochemical characteristics, PCBs partition into soil and sediment particles and organic matter. Depending on the particular PCB congener, K_{oc} range from 510 to 13,300,000. As a general rule, most K_{oc} for PCB mixtures are greater than 5,000 (Sklarew and Others 1987, as cited in HSDB 1999).

The environmental persistence of PCBs, combined with their hydrophobic nature, allows them to bioconcentrate, bioaccumulate, and biomagnify in the environment. Physicochemical properties of PCBs influence the extent of uptake and metabolic fate of PCBs in an organism. The ability of animals to metabolize PCBs tends to increase in the following order: fish< birds< mammals (Matthews and Others 1984, as cited in HSDB 1999). PCBs are absorbed from the stomach, skin, and lungs. PCBs initially concentrate in the liver, blood, and muscle, and if they are resistant to metabolism, they are sequestered into fat tissue, where they persist.

In general, bioaccumulation of PCBs is rapid, depuration is slow, and diet appears to be an important route of PCB accumulation. PCB body burdens in marine organisms, particularly benthic organisms, appear to be directly related to log PCB concentrations in sediments (Shaw and Connell 1982, as cited in Eisler 1986b). In terrestrial or semi-aquatic vertebrates, PCBs tend to bioaccumulate to their highest concentrations in the livers of fish-eating birds, followed by species that feed on small birds and mammals, worms, and insects (NAS 1979, as cited in Eisler 1986b).

4.1 PLANTS

Soil algae exhibit depressed photosynthesis and growth inhibition when exposed to concentrations of PCBs (Eisler 1986b). In other studies, algae exposed to PCB concentrations had an increased mortality rate, decreased reproduction, and impaired growth (Beyer and Others 1996).

4.2 INVERTEBRATES

No information was identified on the effects of PCBs on terrestrial invertebrates.

4.3 AMPHIBIANS AND REPTILES

No information was identified on the effects of PCBs on amphibians and reptiles.

4.4 FISH AND AQUATIC ORGANISMS

Adverse effects associated with exposure to PCBs in aquatic organisms include decreased growth, reproductive toxicity, mutagenicity, histopathology, and a variety of biochemical perturbations (Eisler 1986b; Beyer and Others 1996). Reproductive toxicity has been reported for several aquatic species, and effects include reduced survival of developing eggs, increased mortality in eggs and fry, and reduced fertilization success (Eisler 1986b).

4.5 BIRDS

Birds exposed to PCB concentrations have shown the following effects: disruptions in normal patterns of growth, reproduction, metabolism, and behavior (Peakall and Others 1972, as cited in Eisler 1986b). PCBs can damage the liver, kidney, spleen, and thyroid in birds (Beyer and Others 1996). However, reproductive impairment is the most sensitive endpoint for birds exposed to PCBs. Reproductive effects caused by PCB exposure include embryo mortality, teratogenic effects, decreased hatching success, and reduced eggshell thickness (Beyer and Others 1996).

4.6 MAMMALS

PCB exposures in mammals are associated with adverse effects, including reproductive impairment and failure, physiological, altered behavior, and mutagenic, carcinogenic, and teratogenic (Eisler 1986b; Beyer and Others 1996). In mammals, the most consistent, pathological changes occur in the liver. In females, however, PCBs are transferred through lactation and placenta from adult to offspring; therefore, in utero effects and fetotoxicity may be expressed.

5.0 POLYNUCLEAR AROMATIC HYDROCARBONS

PAH compounds range from low-molecular-weight PAHs composed of two aromatic rings, including naphthalene, to high-molecular-weight PAHs, bearing three or more aromatic rings, including phenanthrene and benzo(a)pyrene. There are thousands of PAH compounds, each differing in the number and position of the aromatic rings and the amount of substitutions in their basic structure. These substitutions may include methyl, oxygen, or other elemental groups. PAH solubility decreases with increasing molecular weight and increasing log K_{ow} values (Eisler 1987).

In aquatic environments, PAHs may evaporate, disperse in the water column, become incorporated into bottom sediments, concentrate in aquatic biota, or experience photodegradation, chemical oxidation, or biodegradation (Suess 1976, as cited in Eisler 1987). Depending on the physicochemical characteristics of the individual compound, the compound will sorb primarily to suspended sediment or colloids, while only about 30 to 35 percent will dissolve into the water column (Lee and Grant 1981, as cited in Eisler 1987). PAHs in aquatic sediments degrade very slowly in the absence of penetrating radiation (Suess 1976, as cited in Eisler 1987) and may persist for long time periods in oxygen-poor basins or in anoxic sediments (Neff 1979, as cited in Eisler 1987).

PAHs cause a wide variety of adverse biological effects in numerous organisms under laboratory conditions, including effects on survival, growth, metabolism, and tumor formation. Inter- and intraspecies responses to PAHs are quite variable and are modified by interaction with other inorganic and organic compounds, including other PAHs (Eisler 1987). PAHs also have been observed to enhance cytochrome P_{450} levels in the liver. Cytochrome P_{450} and mixed function oxidases primarily are responsible for detoxifying chemicals in the liver, and when these chemicals are altered, the toxicity of other compounds that the organisms encounter may be greater than they would be otherwise. In this way, PAHs lower the organism's resistance to other toxins (Amdur and Others 1991). Higher-molecular-weight PAHs are known to be carcinogenic, mutagenic, and teratogenic to a wide variety of organisms, including aquatic life, amphibians, birds, and mammals. Lower-molecular-weight PAHs generally are not carcinogenic but are more acutely toxic than their higher-molecular-weight relatives (Eisler 1987). Lower-molecular-weight PAHs show little tendency to biomagnify in food chains and are relatively rapidly metabolized in vertebrates, provided that toxicity is not expressed.

Many species of aquatic organisms in freshwater or marine environments rapidly bioconcentrate and bioaccumulate low concentrations of PAHs. The ability of PAHs to bioconcentrate and bioaccumulate is chemical-specific. Molecular weight, the position of the aromatic rings, and the type of substitutions all influence the ability of a compound to bioconcentrate and bioaccumulate in ecological receptors. Species-specific characteristics also are critical in evaluating the bioconcentration potential of PAHs; organisms with relatively high lipid contents tend to bioconcentrate PAHs to greater amounts than others (Eisler 1987).

5.1 PLANTS

The biological fate of PAHs in soils is poorly understood. Much of the available information suggests that plants, fungi, and soil bacteria absorb lower-molecular-weight PAHs from soils. These materials may be available for uptake from the rhizosphere through the root (ATSDR 1995a). In general, phytotoxic effects caused by PAH exposure have not been observed; however, very little data have been published on this subject (Eisler 1987). One study observed that PAH concentrations inhibited algae growth (Bastian and Toetz 1982, as cited in Environment Canada 1994b).

5.2 INVERTEBRATES

No information was identified on the effects of PAHs on invertebrates.

5.3 AMPHIBIANS AND REPTILES

No information was identified on the effects of PAHs on amphibians and reptiles.

5.4 FISH AND AQUATIC ORGANISMS

PAHs vary substantially in their toxicity to aquatic organisms. Toxicity of PAHs tends to increase with increasing molecular weight, particularly increasing alkyl substitution. PAHs have been linked to various liver tumors in fish (Environment Canada 1994b), and increased mortality has been observed in water fleas, nymphs, and mayflies exposed to PAHs (Krantzberg and Boyd 1992, Murphy and Others 1993, as cited in Environment Canada 1994b). Sediment PAH concentrations have been observed to cause liver lesions in flatfish and brown bullheads (Eisler 1987). PAHs and their metabolites also suppress the immune system in aquatic organisms.

5.5 BIRDS

For birds, several investigations have suggested that the presence of PAHs in petroleum causes embryo toxicity in avian species (Hoffman and Gay 1981, Albers 1983, as cited in Eisler 1987). Embryo effects include reduced embryo growth, incomplete skeletal ossification, and defects in the eye, brain, liver, and bill.

5.6 MAMMALS

PAH compounds are distinct in their ability to produce tumors in skin and in most epithelial tissues of mammals. Some PAHs have been linked to increased occurrence of leukemia, lung adenoma, and stomach tumors in mice. PAHs have resulted in altered hematopoietic function, as well as development of pathological conditions in lymphoid tissues. Impaired reproduction is frequently observed in chronic exposures where ovotoxicity and antispermatogenic effects have

been noted. Other systemic effects include adrenal necrosis, as well as changes in the intestinal and respiratory epithelia. Many PAHs induce metabolic enzymes, including the mixed-function oxidases present in the liver. Some PAHs and their metabolites also suppress the immune system, which has resulted in decreased responsiveness to mitogens and an increased susceptibility to disease. The majority of available information on toxicological properties of PAHs is focused on their carcinogenicity to mammals (EPA 1980, Lee and Grant 1981, as cited in Eisler 1987).

6.0 SEMIVOLATILE ORGANIC COMPOUNDS

The following sections present data on ecotoxicological effects of various semivolatile organic compounds (SVOC) identified as COPECs at Alameda Point.

6.1 4-CHLORO-3-METHYLPHENOL

Chlorophenols are a group of chemicals that are produced by adding chlorines to phenol. Some chlorophenols are used as pesticides, while others are used in antiseptics (ATSDR 1999c). 4-Chloro-3-methylphenol can be formed inadvertently in waters that have undergone chlorination treatment and by evaporation or waste releases from product formulation or end products containing the compound (U.S. National Library of Medicine [NLM] 2002).

Chlorophenols will stick to soil and sediments at the bottom of lakes, streams, and rivers. Low levels of chlorophenols in water, soil, or sediment are broken down and removed from aerobic environments in a few days to weeks by microorganisms. However, chlorophenols are not readily degradable in anaerobic environments and are relatively persistent in groundwater aquifers. Aquatic hydrolysis, bioconcentration, and volatilization are not important processes of the environmental fate of 4-chloro-3-methylphenol (NLM 2002; ATSDR 1999).

6.1.1 Plants

A study using lettuce seeds were exposed for duration of 21 days to a direct application of 4-chloro-3-methylphenol, which determined an EC50 of 2.3 mg/L (EPA 2003).

6.1.2 Invertebrates

No information was identified on the effects of 4-chloro-3-methylphenol on invertebrates.

6.1.3 Amphibians and Reptiles

No information was identified on the effects of 4-chloro-3-methylphenol on amphibians and reptiles.

6.1.4 Fish and Aquatic Organisms

Various toxicity tests for 4-chloro-3-methylphenol have been conducted using fish and other aquatic organisms. These studies have determined EC50 and LC50 concentrations. LC50 concentrations for such species as the water flea and the great pond snail after a 96-hour exposure duration range from 3.1 mg/L to 17.2 mg/l (EPA 2003).

6.1.5 Birds

A study using 16-week old northern bobwhite quail were exposed for duration of 14 days to 4-chloro-3-methylphenol throught the oral exposure route. This study determined a LD50 of 1,540 mg/kg (EPA 2003).

6.1.6 Mammals

In laboratory studies, animals that received high levels of chlorophenols in food or water developed liver and immune system effects. They did not gain as much weight as animals not fed the compounds (ATSDR 1999).

High levels of chlorophenols given to pregnant female rats in their drinking water reduced the number of babies they had, and caused low birth weights. Chlorophenols have not been shown to cause birth defects in animals (ATSDR 1999).

6.2 BIS(2-ETHYLHEXYL)PHTHALATE

Bis(2-ethylhexyl)phthalate is used widely to make plastics. Bis(2-ethylhexyl)phthalate is a component of many products found in homes and automobiles, as well as in the medical and packaging industries. Its wide use and distribution, as well as its high volatility and persistence, lead to its common occurrence in fish, water, and sediments.

Acute toxic effects may include the death of animals, birds, or fish and death of, or low growth rate in, plants. Acute effects are seen 2 to 4 days after animals or plants come in contact with a toxic chemical substance. Bis(2-ethylhexyl)phthalate has low acute toxicity to aquatic life. Insufficient data are available to evaluate or predict the short-term effects of bis(2-ethylhexyl)phthalate to plants, birds, or land animals.

Chronic toxic effects may include shortened lifespan, reproductive problems, lower fertility, and changes in appearance or behavior. Chronic effects can be seen long after first exposure to a toxic chemical. Bis(2-ethylhexyl)phthalate has low chronic toxicity to aquatic life. Insufficient data are available to evaluate or predict the long-term effects of bis(2-ethylhexyl)phthalate to plants, birds, or land animals.

Bis(2-ethylhexyl)phthalate is slightly soluble in water. Concentrations of less than 1 milligram will mix with a liter of water. Bis(2-ethylhexyl)phthalate is slightly persistent in water, with a half-life of between 2 to 20 days. About 42.8 percent of bis(2-ethylhexyl)phthalate eventually will end up in terrestrial soil; about 40 percent will end up in aquatic sediments; and about 17 percent will end up in air. Some substances increase in concentration, or bioaccumulate, in living organisms as they breathe contaminated air, drink contaminated water, or eat contaminated food. These chemicals can become concentrated in the tissues and internal organs of animals and humans.

6.2.1 Plants

No information was identified on the effects of bis(2-ehtylhexyl)phthalate on plants.

6.2.2 Invertebrates

No information was identified on the effects of bis(2-ehtylhexyl)phthalate on invertebrates.

6.2.3 Amphibians and Reptiles

No information was identified on the effects of bis(2-ehtylhexyl)phthalate on amphibians and reptiles.

6.2.4 Fish and Aquatic Organisms

The concentration of bis(2-ethylhexyl)phthalate found in fish tissues is expected to be much higher than the average concentration of in the water from which the fish was taken; however, little information was identified on the effects of bis(2-ehtylhexyl)phthalate on the toxicity of fish and aquatic organisms.

6.2.5 Birds

No information was identified on the effects of bis(2-ehtylhexyl)phthalate on birds.

6.2.6 Mammals

While significant reproductive effects were observed among mice on diets containing 0.1 percent and 0.3 percent bis(2-ethylhexyl)phthalate, no adverse effects were observed among the 0.01 percent dose group. Because the study considered exposure during critical lifestage, the 0.01 percent dose was considered to be a chronic no observed adverse effect level (NOAEL). The 0.0 percent dose was considered to be a chronic lowest observed adverse effect level.

6.3 CARBAZOLE

Carbazole occurs in the products of incomplete combustion of nitrogen containing organic matter. Carbazole is a heterocyclic aromatic compound produced during coal gasification and in cigarette smoke. Coal tar produced at high temperatures contains an average of 1.5 percent carbazole. Several thousand tons of carbazole are produced each year from coal tar and crude oil. It is widely used in synthesis of dyes, pharmaceuticals, and plastics. It is used in making photographic plates sensitive to ultraviolet light, and is a reagent for lignin, carbohydrates, and formaldehyde. Carbazole also is used in the manufacture of reagents, explosives, insecticides, lubricants, and rubber antioxidants. It serves as an odor inhibitor in detergents.

Carbazole is an extremely weak base and is incompatible with strong oxidizing agents. It reacts with nitrogen oxides. Potassium hydroxide fusion yields a salt. The water solubility of carbazole is less than 1 milligram per milliliter (mg/mL) at 19 °C. The melting point is 247°C; the boiling point is -355°C; the flash point is 220°C. The natural form of carbazole is white crystals, plates, or leaflets.

6.3.1 Plants

No information was identified on the effects of carbazole on plants.

6.3.2 Invertebrates

Carbazole is used as an insecticide; however, information regarding the specific effects of carbazole on invertebrates was not identified.

6.3.3 Amphibians and Reptiles

No information was identified on the effects of carbazole on amphibians and reptiles.

6.3.4 Fish and Aquatic Organisms

A bioaccumulation experiment on large rainbow trout showed that concentrations of carbazole expressed on a per gram basis were highest in fatty tissue, followed by internal organs, then liver or muscle, while blood displayed the lowest levels. Most of the total body burden of this compound was in muscle and internal organs, which represent the largest volume of the fish, while smaller amounts were in blood and liver. However, compared with four other similar compounds, carbazole showed the lowest concentrations within any tissue. It was concluded that both exposure through food and sediment, carbazole bioaccumulated under chronic exposure conditions. Also, the ratio of concentrations in tissues can be indicative of the contaminant dose and time of exposure to the compound (Hellou and Yeats 2000). No information on the consequenses of bioacculation of carbazole on aquatic organisms was identified.

6.3.5 Birds

No information was identified on the effects of carbazole on birds.

6.3.6 Mammals

Carbazole is a poison when introduced by an intraperitoneal route, moderately toxic when ingested, and a suspected carcinogen (limited evidence from the IARC) (IARC and WHO 1983). The lowest published lethal dose for a rat is 500 mg/kg when taken orally. The lethal dose of 50 percent (LD50) mice killed is 200 mg/kg when introduced by intraperitoneal means (Clansky 1990; IARC and WHO 1983; Lewis and Tatkin 1989).

6.4 DIETHYLPHTHALATE

Diethylphthalate is used as a plasticizer, solvent for resins, wetting agent, and insect repellent (NLM 2002). The release of diethylphthalate into the environment from degradation of these products is relatively easy, since it is not a part of the chain of chemicals that make up the plastics. Diethylphthalate is expected to have moderate to low mobility in soil under typical environmental conditions. Biodegradation is expected to occur under both aerobic and anaerobic conditions with an estimated anaerobic half-life of about 5 days. Volatilization from soils will be relatively low (ATSDR 1995b). In aquatic environments, diethylphthalate will adsorb to suspended solids and sediment. Volatization from water surfaces will be slow. The compound is expected to biodegrade in aquatic environments with estimated half-lives of about 3 and 28 days for aerobic and anaerobic condtions, respectively (NLM 2002).

6.4.1 Plants

No information was identified on the effects of diethylphthalate on plants.

6.4.2 Invertebrates

No information was identified on the effects of diethylphthalate on invertebrates

6.4.3 Amphibians and Reptiles

No information was identified on the effects of diethylphthalate on amphibians and reptiles.

6.4.4 Fish and Aquatic Organisms

Bluegill fish exposed to 9.42 microgram per liter of diethylphthalate for 21 days had a measured BCF value of 117. An experimental log BCG value of 2.07 was measured in clams. Based on these studies, the potential for bioconcentration in aquatic organisms is considered high (NLM 2002).

6.4.5 Birds

No information was identified on the effects of diethylphthalate on birds.

6.4.6 Mammals

Diethylphthalate is not classified as a human or animal carcinogen. Teratogenic effects in animal studies have not been noted. In general, this compound is rapidly absorbed, metablolized, and excreted when ingested. Acute feeding of animals has determined that this compound is non-toxic. Chronic feeding of 5 percent diethylphthalate to rats showed a decrease in the growth rate of rats without any effect on food consumption. However, similar studies with dogs showed no chronic effects of the compound to this species (NLM 2002).

6.5 DI-N-BUTYLPHTHALATE

Di-n-butylphthalate is used as a plasticizer, solvent for resins, fuel propellent, and insect propellent (NLM 2002). It is only slightly soluble in water and does not easily evaporate (or volatilize) (ATSDR 2001). Di-n-butylphthalate is expected to have low mobility in soil. Biodegradation is expected to occur under both aerobic and anaerobic conditions. In aquatic environments, di-n-butylphthalate will adsorb to sediment or particulate matter. Volatization from water surfaces will be slow. The compound is expected to biodegrade in aquatic environments with estimated half-lives of about 3 and 28 days for aerobic and anaerobic condtions, respectively (NLM 2002; ATSDR 2001). Tertogenic effects from exposure to di-n-butylphthalate have been observed in several studies, as noted in the following sections.

6.5.1 Plants

Cabbage seedlings were killed when the volume of di-n-butylphthalate reached toxic levels (concentrations of up to 2,010 picograms per liter) in the air (NLM 2002).

6.5.2 Invertebrates

Di-n-butylphthalate was not toxic to female houseflies when applied at high doses, either topically or by injection (NLM 2002).

6.5.3 Amphibians and Reptiles

No information was identified on the effects of diethylphthalate on amphibians and reptiles.

6.5.4 Fish and Aquatic Organisms

Based on experimental BCF values ranging from 12 to 117 measured in oysters, fish, and shrimp, bioconcentration in aquatic organisms is low to moderate (NLM 2002).

Toxicities to fecundity in *Daphnia magna* and the fathead minnow were assessed and it was determined that 1.8 milligrams per liter of di-n-butylphthalate showed significant reduction in reproduction for Daphnia magna and decrease in the survival of fathead minnow embroyos (NLM 2002).

6.5.5 Birds

Mallard ducks fed a continuous diet of duck mash containing 10 mg/kg of di-n-butylphthalate for 5 months, showed no significant accumulation of the chemical.

6.5.6 Mammals

Di-n-butylphthalate is not classified as a human or animal carcinogen. Teratogenic effects have been seen in rat studies during gestation. Effects such as skeletal abnormalities, such as, absence of tail, twisted legs, and abnormal skull bones, as well as, reduced weight of fetuses were observed compared to controls (NLM 2002).

6.6 N-NITROSODIPHENYLAMINE

N-nitrosodiphenylamine is a solid chemical used in the rubber industry. Its primary use is as a staining retarder for natural and synthetic rubbers. It most likely enters the environment from industrial discharges and spills.

Acute toxic effects may include the death of animals, birds, and fish and death of, or low growth rate in, plants. Acute effects are seen 2 to 4 days after animals or plants come in contact with n-nitrosodiphenylamine. Insufficient data are available to evaluate or predict the acute, short-term effects of n-nitrosodiphenylamine to aquatic life, plants, birds, or land animals.

Chronic toxic effects may include shortened lifespan, reproductive problems, lower fertility, and changes in appearance or behavior. Chronic effects can be seen long after first exposures to a toxic chemical. Insufficient data are available to evaluate or predict the chronic, long-term effects of n-Nitrosodiphenylamine to aquatic life, plants, birds, or land animals.

6.6.1 Plants

No information was identified on the effects of n-nitrosodiphenylamine on plants.

6.6.2 Invertebrates

Neuhauser and Callahan (1990) examined at the effect of this compound on growth and reproduction of *Eisenia fetida* after 56 days of growth in horse manure. A concentration of 1,400 ppm (the lowest concentration tested) caused a 37 percent reduction in cocoon production.

6.6.3 Amphibians and Reptiles

No information was identified on the effects of n-nitrosodiphenylamine on amphibians and reptiles.

6.6.4 Fish and Aquatic Organisms

No information was identified on the effects of n-nitrosodiphenylamine on fish and aquatic organisms.

6.6.5 Birds

No information was identified on the effects of n-nitrosodiphenylamine on birds.

6.6.6 Mammals

No information was identified on the effects of n-nitrosodiphenylamine on mammals.

6.7 PENTACHLOROPHENOL

Pentachlorophenol (PCP) is a semivolatile, chlorinated phenolic compound and is a priority pollutant. PCP is an anthropogenic substance, made from other chemicals, and does not occur naturally in the environment. At one time, it was one of the most widely used biocides in the United States. PCP is a restricted-use insecticide, fungicide, molluscicide, defoliant, herbicide, and wood preservative, and it is no longer available to the general public. PCP has two forms: pentachlorophenol and the sodium salt of pentachlorophenol. The sodium salt dissolves easily in water, but PCP does not. This compound is among 31 substances classified by the Worker Health and Safety Unit of the California Department of Food and Agriculture as having high carcinogenic or oncogenic potential and is listed by EPA as a carcinogen. PCP is a substance whose widespread use, mainly in wood protection and pulp and paper mills, has led to extensive environmental contamination.

6.7.1 Plants

Hulzebos and Others (1993) evaluated the effects of PCP on lettuce growth in two soils and in solution. Soils with a high clay content produced higher EC_{50} values for PCP. Toxic levels of PCP caused reduced fresh weight of shoots of oats (*Avenas sativa*) after 14 days of exposure and turnips (*Brassica rapa*) after 10 days of exposure in a sandy loam soil. The EC_{50}s for oats and turnips were 20 and 10 ppm, respectively.

6.7.2 Invertebrates

Fitzgerald and Others (1996) investigated the role of species, temperature, and soil type on toxicity of PCP to earthworms. Researchers estimated incipient lethal levels (ILL), which they define as a time-dependent LC_{50}. ILLs for *Eisenia fetida* grown for 14 days in an artificial soil at 24 or 15 °C were 37 and 27 ppm, respectively. The ILL for *Eisenia fetida* grown for 14 days in a clay soil at 24 °C was 72 ppm. The ILL for *Eisenia fetida* at 24 °C was 168 ppm. *Lumbricus terrestris* grown at 15 °C had an ILL of 191 ppm.

6.7.3 Amphibians and Reptiles

PCP may affect growth and survival in sensitive aquatic species.

6.7.4 Fish and Aquatic Organisms

Little information was identified on the effects of PCP on fish and aquatic organisms.

6.7.5 Birds

Avian fatalities have been reported for low oral doses of PCPs. Chlorophenols appear to be mildly hepatotoxic, and studies in animals indicate that PCP may reduce humoral and cell-mediated immunity, as well as act as a cocarcinogen (HSDB 1999). Acute, dietary studies (using oral doses high enough to cause relatively quick toxicity), feeding this compound to mammal and bird species, place it in the "moderately toxic" category for mallards and pheasants and the "relatively nontoxic" category for Japanese quail.

6.7.6 Mammals

Animal studies indicate that rat embryos are most susceptible to the toxic effect of PCP during the early phases of organogenesis (HSDB 1999). Teratogenic activities of highly purified PCP and pentachloroanisole, administered in the diet of Sprague-Dawley rats of both sexes, revealed embryonic deaths following treatment with PCP at the rate of 43 mg/kg/day, while lower doses of the compound induced dose-related reductions in body weight. At the rate of 13 mg/kg/day, PCP reduced the crown to rump length and increased the skeletal alterations of the fetus. Decreased numbers of corpora lutea and embryonic death were recorded following the administration of PCP at the rate of 4 and 41 mg/kg/day. At the same dose, PCP reduced the body weight and crown to rump length of male fetuses, while their female counterparts were not affected.

7.0 VOLATILE ORGANIC COMPOUNDS

The following sections present data on ecotoxicological effects of the VOCs identified as COPECs at Alameda Point.

7.1 1,2-DICHLOROETHENE

1,2-dichloroethene (DCE) is a clear, colorless, flammable liquid, consisting of a mixture of the cis- and trans-isomers. It is used as an intermediate to make other chemicals and as a cleaning solvent. It may enter the environment from industrial or municipal discharges or spills.

Acute effects may include shortened lifespan, reproductive problems, lower fertility, and changes in appearance or behavior. Chronic toxicity of 1,2-DCE is moderate in aquatic life. Insufficient data are available to evaluate or predict the long-term effects of 1,2-DCE to plants, invertebrates, birds, or terrestrial animals.

7.1.1 Plants

No information was identified on the effects of 1,2-DCE on plants.

7.1.2 Invertebrates

No information was identified on the effects of 1,2-DCE on invertebrates.

7.1.3 Amphibians and Reptiles

No information was identified on the effects of 1,2-DCE on amphibians and reptiles.

7.1.4 Fish and Aquatic Organisms

No information was identified on the effects of 1,2-DCE on fish and aquatic organisms.

7.1.5 Birds

No information was identified on the effects of 1,2-DCE on birds.

7.1.6 Mammals

No information was identified on the effects of 1,2-DCE on mammals.

7.2 1,3-DICHLOROBENZENE

1,3-dichlorobenzene is used as a fumigant and an insecticide. It is highly volatile, which is an important fate process of the chemical from dry soils. However, it is also expected to adsorb to sediment or particulate matter in aquatic environments. Based on experimental BCF values ranging from 60 to 370, which was measured in carp and trout, the potential for bioconcentration in aquatic organisms is considered moderate to high (NLM 2002). Biodegradation of the compound by microorganisms in soil and water is expected to be slow to non-existent.

7.2.1 Plants

1,3-dichlorobenzene was identified, but not quantified in plant material grown in an Illinois coal refuse reclamation site. This indicates that plants can take up and store 1,3-dichlorobenzene. No information was identified on the toxic effects of 1,3-dichlorobenzene on plants (NLM 2002).

7.2.2 Invertebrates

No information was identified on the toxic effects of 1,3-dichlorobenzene on invertebrates.

7.2.3 Amphibians and Reptiles

No information was identified on the toxic effects of 1,3-dichlorobenzene on amphibians and reptiles.

7.2.4 Fish and Aquatic Organisms

Chronic toxicities were developed for fathead minnows exposed from the embroyo through the early juvenile development stage. The range from the NOAEL and LOAEL for 1,3-dichlorobenze was 1,000 to 2,300 microgram per liter. The tissue concentration of 1,3-dichlorobenzene at the NOAEL was between 120 to 160 microgram per gram, while the mean BCF was 97. The 96-hour lethal concentration value for juvenile fish was 7,800 micrograms per liter (NLM 2002).

7.2.5 Birds

No information was identified on the toxic effects of 1,3-dichlorobenzene on birds.

7.2.6 Mammals

1,3-dichlorobenzene is not classified as a human or animal carcinogen.

7.3 4-METHYL-2-PENTANONE

This compound also is known as methyl isobutyl ketone (MIBK). The chemical is used as a solvent for vinyl, epoxy, acrylic, natural resins, nitrocellulose, and dyes. Additionally, it is used as an extracting agent for the production of antibiotics or the removal of paraffins from mineral oil. MIBK also occurs naturally in oranges and grapes. MIBK will have a high mobility through soils, but will volatilize easily from the dry soil surfaces and water surfaces. In water, MIBK will not adsorb to suspended solids or sediment. Biodegradation will occur both in aerobic and anaerobic conditions, and bioconcentration in organisms will be low based on an estimated BCF value of 6 (NLM 2002).

7.3.1 Plants

No information was identified on the toxic effects of MIBK on plants.

7.3.2 Invertebrates

No information was identified on the toxic effects of MIBK on invertebrates.

7.3.3 Amphibians and Reptiles

No information was identified on the toxic effects of MIBK on amphibians and reptiles.

7.3.4 Fish and Aquatic Organisms

A 24-hour single dose of 460 mg/L was identified as the LC50 concentration for the goldfish, while in the water flea the 24-hour single dose LC50 was measured at 4,300 mg/L.

7.3.5 Birds

An LD50 concentration of `00 milligrams per kilogram was determined for the red-winged blackbird.

7.3.6 Mammals

An exposure of 16,800 ppm of MIBK for up to six hours killed 90 percent of guinea pigs exposed. While an exposure of 1,000 ppm of MIBK produced only minor respiratory effects and no eye and nose irritation to guinea pigs. A continuous inhalation exposure of 100 ppm of MIBK to Rhesus monkeys, dogs, and rats produced no significant changes in hematology, while rats exposed to the same amounts showed a decrease in liver and kidney weights.

7.4 ACETONE

Acetone is a colorless, liquid VOC that has a pungent, sweet odor and taste (Budavari 1996). Acetone is used as a solvent for fats, oils, waxes, resins, rubber, plastics, lacquers, varnishes, and rubber cement; in the manufacture of acetyl acid, chloroform, and other chemicals; for extraction of plant and animal substances; in purifying paraffin; and a main ingredient in nail polish remover (Budavari 1996).

Acetone is considered to be the least toxic solvent used in industry, but it is highly volatile, making inhalation the primary route of exposure. Dermal contact is a secondary route of exposure. The mechanism by which acetone enters the environment is through wastewater from industries who use and produce the compound. Acetone is not persistent in the environment and once released, it will volatilize quickly into the air from both soils and water (Benkelbberg and Others 1995, Alarie and Others 1995, as cited in HSDB 1999). It is not expected to adsorb to sediments or soils and because of its hydrophilic characteristic, it is not expected to bioconcentrate in wildlife receptors (HSDB 1999). As a vapor, acetone will undergo photodegrade (HSDB 1999).

7.4.1 Plants

No information was identified on the effects of acetone on plants.

7.4.2 Invertebrates

No information was identified on the effects of acetone on invertebrates.

7.4.3 Amphibians and Reptiles

No information was identified on the effects of acetone on amphibians and reptiles.

7.4.4 Fish and Aquatic Organisms

Results of various ecotoxicity tests of aquatic organisms produced LC_{50} and LD_{50} values from acetone exposure. The LC_{50} for brine shrimp and *Daphnia magna* is 2,100 mg/L 24 to 48 hr and 10 mg/L 24 to 48 hr, respectively. In fish, LC_{50} values for the bluegill sunfish, mosquito fish, and the guppy were 8,300 mg/L 96 hr; 13,000 mg/L 24 to 96 hr; and 7,032 mg/L 14 days, respectively. The LD_{50} for the goldfish was 5,000 mg/L 24 hr (Verschueren 1996). From this data, the lower trophic levels of aquatic organisms seem to exhibit greater sensitivity for adverse effects from acetone exposure than the higher trophic-level organisms.

7.4.5 Birds

Very few studies were identified on the effects of acetone on birds. Two ecotoxicity studies, on the ring-necked pheasant and the Japanese quail, established the LC_{50} for these organisms at 40,000 mg/L of acetone in the diet at an age of 10 to 14 days. No mortality of these birds was seen at concentrations below 40,000 mg/L (Hill and Camardese 1986, [USFWS] 1975, as cited in HSDB 1999). Ameenuddin and Sunde (1984) investigated the sensitivity of developing chicken embryos to various solvents and found that acetone, at a concentration of 0.10 mL per egg injected, significantly reduced the percentage hatchability and caused high embryonic mortality during the first week of incubation.

7.4.6 Mammals

Studies of various mammal receptors exposed to acetone vapors have shown very few (if any) ill effects, other than slight irritation of the eyes and nose (in cats), loss of reflexes (in guinea pigs), moderate corneal injury (in rabbits and rats), and cataracts (in guinea pigs) (Clayton and Clayton 1982). Very little information was found on the effects of ingestion of acetone-saturated water; however, this is the least likely route of exposure for wildlife.

7.5 BENZENE

Benzene is present in gasoline as an additive, and is manufactured to produce a variety of chemicals such as polymers, detergents, pesticides pharmaceuticals, dyes, plastics, and resins. Also, benzene can be used as a solvent for waxes, resins, oils, and natural rubbers. Benzene is naturally present in volcanos, as a constituent of crude oil, in forest fires, and as a plant volatile. Benzene is highly water-soluble. Generally, benzene will be removed from the atmosphere by rain. Volatility from moist soils is greater than from dry soils, and volatility from water surfaces is an important fate process. Soil mobility of benzene is relatively high. Abiotic degradation of benzene in the atmosphere will occur, with the half-life of the reaction estimated at 13 days. Biodegratdation of benzene in water is expected. Benzene is not expected to bioconcentrate in aquatic organisms; however, bioconcentration in mammals (humans) has been observed. Benzene has been classified as a known human carcinogen for all routes of exposure (NLM 2002).

7.5.1 Plants

No information was identified on the effects of benzene on plants.

7.5.2 Invertebrates

No information was identified on the effects of benzene on invertebrates.

7.5.3 Amphibians and Reptiles

No information was identified on the effects of benzene on amphibians and reptiles.

7.5.4 Fish and Aquatic Organisms

Adverse growth effects in blue crab juveniles were observed when exposed to sublethal concentrations (0.1 or 5 ppm) of benzene. The 96-hour LC 50 concentration for grass shrimp was measured at 27 ppm; 1,108 ppm for crab larvae; and 5.8 to 11 mg/l for bass (NLM 2002).

7.5.5 Birds

No information was identified on the effects of benzene on birds.

7.5.6 Mammals

Many experimental animal studies have indicated that benzene is a carcinogen. Benzene increases the risk of cancer in multiple organ systems, including the hematopoietic system, oral and nasal cavitites, liver, stomach, lung, ovaries, and mammary glad.

Respiratory effects have been noted in cats, primates, rabbits, and rats when exposed to benzene in acute inhalation studies.

Teratogenic effects have been noted in rats and mice studies. Such effects include decrease in pup survival and decrease in mean pup weights. No effects were noted in these studies between treated and control animals for maternal mortality, pregnancy rates, mean number of dead pups, and maternal body weight.

7.6 CARBON DISULFIDE

Carbon disulfide is used as a process solvent for phosphorus, sulfur, selenium, bromine, iodine, fats, resuns, and rubbers, and as a chemical intermediate in the manufacture of rayon, carbon tetrachloride, xanthogenates, soil disinfectants, and electronic vacuum tubes. The ocean, primarily the coastal area or other areas of high biological productivity, is a major global source of carbon disulfide. This "natural" source of carbon disulfide is generated by the reduction of sulfates in soil. Carbon disulfide is only slightly mobile in soils. Volatilization from moist soils occurs more rapidly than from dry soils, and volitilation from water surfaces is an important process in the fate and transport of carbon disulfide. Carbon disulfide does not significantly bioaccumulate in aquatic organisms (NLM 2002).

7.6.1 Plants

No information was identified on the effects of carbon disulfide on plants.

7.6.2 Invertebrates

No information was identified on the effects of carbon disulfide on invertebrates.

7.6.3 Amphibians and Reptiles

No information was identified on the effects of carbon disulfide on amphibians and reptiles.

7.6.4 Fish and Aquatic Organisms

No information was identified on the effects of carbon disulfide on fish and aquatic organisms.

7.6.5 Birds

No information was identified on the effects of carbon disulfide on birds.

7.6.6 Mammals

Teratogenic effects were studied in rats. Rats were exposed to 642 ppm carbon disulfide for 2 hours per day for the entire pregnancy. The results indicated that the reproductive success of treated groups was less than that of the control groups (NLM 2002).

7.7 ETHYLBENZENE

Ethylbenzene is a colorless liquid that occurs together with other aromatics. A typical, complex mixture of aromatics may be more toxic, hazardous, or carcinogenic in general than this compound would be alone.

Except for short-term hazards from concentrated spills, this compound has been associated more frequently with risk to humans than with risk to nonhuman species, such as fish and wildlife. This difference occurs partly because plants, fish, and birds take up only very small amounts and because this volatile compound tends to evaporate into the atmosphere, rather than persisting in surface waters or soils (ATSDR 1990c). However, VOCs, such as ethylbenzene, can pose a drinking water hazard when they accumulate in groundwater.

Ethylbenzene releases to water occur as a result of industrial discharges, use of gasoline fuel for boating, fuel spillage, leaking underground storage tanks, landfill leachate, and the inappropriate disposal of waste (ASTDR 1990c). Ocean releases occur as a result of offshore oil production, hydrocarbon venting, oil field brines, and tanker oil spills (ASTDR 1990c).

Effects of this volatile solvent to nonhuman biota often result from high concentrations immediately after a spill (before the compound has volatilized into the atmosphere) or as the

indirect result of contamination of groundwater. For example, if highly polluted groundwater enters surface waters from spring or seeps, local effects may occur in the mixing zone.

In comparison to chemicals such as PCBs, DDT, and other chlorinated pesticides, which are of great concern with respect to bioaccumulation, ethylbenzene does not bioaccumulate significantly in aquatic food species (ATSDR 1990c).

7.7.1 Plants

Little information was identified on the effects of ethylbenzene on plants.

7.7.2 Invertebrates

Little information was identified on the effects of ethylbenzene on invertebrates.

7.7.3 Amphibians and Reptiles

Little information was identified on the effects of ethylbenzene on amphibians and reptiles.

7.7.4 Fish and Aquatic Organisms

Little information was identified on the effects of ethylbenzene on fish and aquatic organisms.

7.7.5 Birds

Little information was identified on the effects of ethylbenzene on birds.

7.7.6 Mammals

Little information was identified on the effects of ethylbenzene on mammals.

7.8 METHYLENE CHLORIDE

Methylene chloride is a VOC and is a colorless liquid with a chloroform-like odor (HSDB 1999). Methylene chloride is used as a solvent for cellulose, plastic film, and adhesives; in insecticide processing and producting steroids and antibiotics; as an anesthetic paint remover, and degreaser; in decaffeinating coffee; and as a refrigerant (Budavari 1996).

The primary mechanism by which methylene chloride enters the environment is through air emissions from industries that produce and use the chemical and in wastewater. If released onto soil or into surface water, the chemical will volatilize quickly into the air because of its high vapor pressure (Dilling and Others 1795, DeWalle and Chain 1975, as cited in HSDB 1999). A

portion of spilled methylene chloride will leach through soil into groundwater (Dilling and Others 1975, as cited in HSDB 1999). Methylene chloride will adsorb strongly to peat moss; however, this mechanism of transport is minor compared to volatilization. Bioconcentration of methylene chloride is not expected, because it is hydrophilic and is excreted by the organism through normal, physiological mechanisms.

7.8.1 Plants

No information was identified on the effects of methylene chloride on plants.

7.8.2 Invertebrates

No information was identified on the effects of methylene chloride on invertebrates.

7.8.3 Amphibians and Reptiles

No information was identified on the effects of methylene chloride on amphibians and reptiles.

7.8.4 Fish and Aquatic Organisms

Various ecotoxicity studies have determined LC_{50} and LD_{50} values for aquatic receptors. The following is a summary of some of these findings. The LC_{50} values for Mysid shrimp and *Daphnia magna* exposed to methylene chloride were 256,000 µg/L/1/96 hr and 224,000 µg/L/1/48 hr, respectively (HSDB 1999). In fish, the LC_{50} for fathead minnow, bluegill, and guppies were 310 mg/L/1/96 hr, 230 mg/L 96 hr, and 294 mg/L in 14 days (HSDB 1999).

7.8.5 Birds

No information was identified on the effects of methylene chloride on birds.

7.8.6 Mammals

Studies on the toxic effects of methylene chloride on various mammal receptors have indicated evidence of carcinogenicity and adverse physiological effects to the kidneys and liver. The EPA (1999) Integrated Risk Information System databank on methylene chloride indicates increased incidence of hepatocellular neoplasms and alveolar/bronchiolar neoplasms in male and female mice and increased incidence of benign, mammary tumors in male and female rats, salivary gland sarcomas in male rats, and leukemia in female rats. Morris and Others (1979, as cited in HSDB 1999) showed toxic effects of methylene chloride to the livers of guinea pigs. Adverse renal effects were documented in rat studies (Kurppa and Vainio 1981; Kluwe and Others 1982, as cited in HSDB 1999).

7.9 TETRACHLOROETHENE

Tetrachloroethene, also known as perchloroethylene (PCE), is a carcinogenic priority pollutant that is used in dry cleaning and as an industrial solvent (EPA 1986, 1991).

This synthetic compound is widely used for dry cleaning fabrics and for metal degreasing operations. It also is used as a starting material for making other chemicals and is used in some consumer products. It evaporates easily into the air and has a sharp, sweet odor. Most people can smell PCE when it is present in the air at a level of 1 ppm or more.

PCE enters the environment mostly by evaporating into the air during use. It also can enter water supplies and soil during disposal of sewage sludge and factory waste. PCE also may enter the air, soil, or water by leaking or evaporating from storage and waste sites (ATSDR 1995c).

PCE has received more publicity and attention as a potential hazard to humans than to fish and wildlife; therefore, more literature related to humans is available, and information on other species is comparatively sparse.

Effects of this volatile solvent to nonhuman biota often result from high concentrations immediately after a spill (before the compound has volatilized into the atmosphere) or as the indirect result of groundwater contamination. For example, if highly polluted groundwater comes into surface waters from springs or seeps, effects may occur in the mixing zone.

PCE has been shown to release lysosomal enzymes from granular fractions prepared from nematodes. Because the nematode gut seems to be specialized for lysosomal, intracellular digestion of nutrients, interference with this process may explain PCE action. It has been assumed that affected worms are paralyzed sufficiently to release their attachment to the intestinal wall (Goodman and Gilman 1975).

One potentially important aspect of PCE is its ability to break down into other hazardous compounds. PCE can be transformed by reductive dehalogenation to trichloroethylene (TCE), dichloroethylene, and vinyl chloride under anaerobic conditions. Therefore, when PCE levels have been reduced to acceptable levels, it is still necessary to verify that concentrations of suspected hazardous breakdown products also are acceptably low.

PCE has been classified as a probable human carcinogen by EPA (EPA 1986). It has been treated as a carcinogen for EPA preliminary remediation goals (PRG) and risk-based concentration (RBC) modeling (EPA 1995c, 1996).

PCE is likely to enter the environment through fugitive air emissions from dry cleaning and metal degreasing industries and by spills or accidental releases to air, soil, or water. If PCE is released to soil, it will evaporate into the atmosphere and leach to the groundwater. Biodegradation may be an important process in anaerobic soils based on laboratory tests with methanogenic columns. Slow biodegradation may occur in groundwater, where acclimated

populations of microorganisms exist. If PCE is released to water, it will be subject to rapid volatilization, with estimated half-lives ranging from less than 1 day to several weeks. It will not be expected to significantly biodegrade, bioconcentrate in aquatic organisms, or significantly adsorb to sediment. PCE will not be expected to significantly hydrolyze in soil or water under normal environmental conditions. If PCE is released to the atmosphere, it will exist mainly in the gas phase and will be subject to photo-oxidation, with estimates of degradation time ranging from an approximate half-life of 2 months to complete degradation in an hour. Some PCE in the atmosphere may be subject to washout in rain, based on the solubility of PCE in water; PCE has been detected in rain.

Low to moderate potential exists for bioconcentration of PCE (Environment Canada 1993a). Using a reported log K_{ow} of 3.40, a BCF of 226 was estimated. Based on the reported and estimated BCFs, PCE will not be expected to significantly bioconcentrate in aquatic organisms (Barrows and Others 1978).

7.9.1 Plants

A study was designed to assess the effects of PCE on the phytoplankton community at initial concentrations of 1.2 and 0.44 mg/L in separated compartments of an experimental pond. Measurements in surrounding water were made simultaneously to detect possible effects of compartmentalization. Residues as low as 0.1 mg/L could be analyzed in 5-day (low-dose) and 38-day (high-dose) postapplication tests. The phytoplankton community showed an increase in relative abundance and a decrease in species diversity. Studies of the frequency distribution of six selected phytoplankton species (*Spirogyra species, Microcystis flosaquae, Stichoccoccus bacillaris, Nitzschia acicularis, Chilomonas paramecium,* and *Actiniphrys species*) demonstrated the total elimination of at least four species from the treated compartments. Despite different dosing, only weak differences were found in toxic effects between the low- and high-dosed compartments. No significant, chemically induced effect was observed on the physicochemical properties of the treated water (Lay and Others 1984).

7.9.2 Invertebrates

Adverse effects to *Daphnia magna* occurred at concentrations as low as 0.44 mg/L (Environment Canada 1993a). A study was designed to evaluate the effects of PCE on the zooplankton community at initial concentrations of 1.2 and 0.44 mg/L in separated compartments of an experimental pond. Measurements in surrounding water were made simultaneously to detect possible effects of compartmentalization. Residues as low as 0.1 mg/L could be analyzed in 5-day (low-dose) and 38-day (high-dose) postapplication tests. In all applied biotopes, a lethal effect on the *Daphnia magna* population was detected. No significant, chemically induced effect was observed on the physicochemical properties of the treated water (Lay and Others 1984).

7.9.3 Amphibians and Reptiles

Little information was identified on the effects of PCE on amphibians and reptiles.

7.9.4 Fish and Aquatic Organisms

Long-term adverse effects to brook trout growth occurred at concentrations as low as 1.52 mg/L (Environment Canada 1993a).

LC_{50} values for *Cyprinodon variegatus* (sheepshead minnow) were between 29 and 52 mg/L for 4-day exposures. Death was not observed at concentrations below 29 mg for a 96-hour exposure (EPA 1997).

LC_{50} values for *Jordanella floridae* (flagfish) were 11.5 mg/L for a 24-hour exposure, 10.9 mg/L for a 48-hour exposure, 8.9 mg/L for a 72-hour exposure, and 4.0 and 8.4 mg/L for two 96-hour exposures. The lowest observed effect concentrations (LOEC) for death were 3.1 and 3.7 mg/L for a 10-day and a 28-day exposure, respectively (EPA 1997).

7.9.5 Birds

Little information was identified on the effects of PCE on birds.

7.9.6 Mammals

Results from inhalation studies in animals suggest that PCE is fetotoxic, but not teratogenic, at concentrations that are also maternally toxic (ATSDR 1995c).

Pregnant mice and rats were exposed to a concentration of 300 ppm. Both species were exposed for periods of 7 hours daily on Days 6 through 15 of gestation. No fetal toxicity or teratogenicity was detected (Shepard 1986; Kafafi and Others 1993).

Only one reproductive study in animals was identified, and it had serious limitations in design and conduct. Therefore, it provides no conclusive evidence for reproductive effects (ATSDR 1995c).

Male Swiss-Cox mice were administered PCE by gavage at doses of 0; 20; 100; 200; 500; 1,000; 1,500; and 2,000 mg/kg, 5 days per week for 6 weeks. Liver toxicity was evaluated by several parameters, including liver weight-to-body weight ration, hepatic triglyceride concentrations, DNA content, histopathological evaluation, and serum enzyme levels. Increased liver triglycerides were first observed in mice treated with 100 mg/kg. Liver weight-to-body weight ratios were significantly higher than controls for the 100-mg/kg group and slightly higher than controls in the 20-mg/kg group. A no observed adverse effect level (NOAEL) of 20 mg/kg/day was identified based on the absence of heptatoxic effects. After 5 days of exposure, a NOAEL of 20 mg/kg/day was identified (EPA 1996).

7.10 TOLUENE

Toluene is an organic solvent that is widely used, particularly in the paint, printing, and adhesive industries; toluene also is abused by "recreational" inhalation. Additionally, toluene is used as a gasoline additive (HSDB 1999). Toluene often occurs together with other aromatics (often including PAHs, alkyl PAHs, and benzene), and a typical complex mixture of such aromatics may be more toxic or hazardous, in general, than this compound would be alone.

Toluene can be released to soil through petroleum spills and from leaking underground storage tanks (Environment Canada 1993b). Toluene can be released into water through chemical and petroleum product spills and from discharges of industrial and municipal effluents (Environment Canada 1993b).

Toluene is dangerous to aquatic life in high concentrations. It may be dangerous if it enters water intakes (HSDB 1999). Water uses threatened are recreational, potable supply, fisheries, and industrial (EPA 1994).

Except for short-term hazards from concentrated spills, toluene frequently has been more associated with risk to humans than with risk to other species such as fish and wildlife. This is partly because plants, fish, and birds take up only very small amounts and because this VOC tends to evaporate into the atmosphere rather than persist in surface waters or soils (ATSDR 1994b). However, volatiles, such as toluene, can pose a drinking water hazard as a contaminant in groundwater.

Toluene has been studied for reproductive effects in laboratory animals and generally has not been teratogenic but has been fetotoxic at high doses that also were toxic to the mothers (Dabney 1994).

Toluene does not persist in water or soil, because it biodegrades and volatilizes rapidly to the atmosphere (Environment Canada 1993b). Accumulation of toluene is not expected to be important in any terrestrial or aquatic organism, and no reports exist indicating any significant organism bioconcentration or food chain biomagnification (Environment Canada 1993b).

BCFs for toluene in biota have been predicted to be between 15 and 70 (values less than 100 generally indicate that a compound is unlikely to undergo significant bioconcentration in organisms or biomagnification along food chains) (Environment Canada 1993b).

7.10.1 Plants

No information was identified on the effects of toluene on amphibians and reptiles.

7.10.2 Invertebrates

No information was identified on the effects of toluene on invertebrates.

7.10.3 Amphibians and Reptiles

No information was identified on the effects of toluene on amphibians and reptiles.

7.10.4 Fish and Aquatic Organisms

For aquatic biota, the most sensitive organism identified in long-term tests was the early life stages of rainbow trout. The reported LC_{50} was 0.02 mg/L for continuous, 27-day exposure of the embryo-larval stages. Coho salmon fry were the most sensitive aquatic organisms in acute tests, with a 96-hour LC_{50} of 5.5 mg/L. The 40-day, no observed effect concentration for growth of coho salmon fry was 1.4 mg/L, and the lowest observed effect concentration (LOEC) was 2.8 mg/L (Environment Canada 1993b).

Based on its lipophilic properties, toluene is expected to have a moderate tendency to bioconcentrate in fatty tissues of aquatic organisms. The BCF was estimated to be about 10.7 in fish and about 4.2 in mussels. Levels that accumulate in the flesh of aquatic species also depend on the degree to which the species metabolize toluene. The highest tissue levels of toluene tend to occur in species such as eels, crabs, and herring that have a low rate of toluene metabolism (ATSDR 1994b). Metabolism of toluene limits its tendency to biomagnify in the food chain (ATSDR 1994b).

7.10.5 Birds

No information was identified on the effects of toluene on birds.

7.10.6 Mammals

The weight of evidence indicates that toluene is not mutagenic in mammalian or microbial systems, and results concerning its potential to act as a promoter are inconclusive (Environment Canada 1993b). Results of chromosomal assays have been mixed (Dabney 1994).

7.11 TRICHLOROETHENE

TCE is a clear, colorless, nonflammable liquid. It is heavier than water. It is widely used as a solvent for fats, waxes, resins, ores, rubber, paints, and varnishes. It also is used in dry cleaning, in degreasing, and as an intermediate to make other organic chemicals. TCE may enter the environment from industrial discharges, municipal waste treatment plant discharges, or spills.

Acute, toxic effects may include the death of animals, birds, or fish, and death or low growth rate in plants. Acute effects are seen 2 to 4 days after animals or plants come in contact with TCE. TCE has moderate, acute toxicity to aquatic life. Insufficient data are available to evaluate or predict the short-term effects of TCE to plants, birds, or land animals.

Chronic, toxic effects may include shortened lifespan, reproductive problems, lower fertility, and changes in appearance or behavior. Chronic effects can be seen long after first exposures to a toxic chemical. TCE has moderate chronic toxicity to aquatic life. Insufficient data are available to evaluate or predict the long-term effects of TCE to plants, birds, or land animals.

7.11.1 Plants

No information was identified on the effects of TCE on plants.

7.11.2 Invertebrates

No information was identified on the effects of TCE on invertebrates.

7.11.3 Amphibians and Reptiles

No information was identified on the effects of TCE on amphibians and reptiles.

7.11.4 Fish and Aquatic Organisms

No information was identified on the effects of TCE on fish and aquatic organisms.

7.11.5 Birds

No information was identified on the effects of TCE on birds.

7.11.6 Mammals

No information was identified on the effects of TCE on mammals.

7.12 XYLENE

Xylene, a widely used industrial solvent, is a mixture of *ortho*-, *meta*-, and *para*-isomers (HSDB 1999). While *o*-xylene is recognized as a distinct product in chemical analyses, the *m*- and *p*- isomers are generally not separated during most routine analyses. Therefore, results of xylene analyses in environmental samples usually are presented as the concentration of the *o*-isomer and the total concentration of the combine *m*- and *p*- isomers (Environment Canada 1993c).

Although most xylenes are released into the air, concentrations exposed to wildlife are at least 1,000 times less than the effects threshold estimated for inhalation of xylenes by mammals. Concentrations in ambient air are at least 1 million times less than the effects threshold recorded for plants. Except for short-term hazards from concentrated spills, this compound frequently has been more associated with risk to humans than with risk to other species such as fish and wildlife. This is partly because plants, fish, and birds take up only very small amounts, and because this VOC tends to evaporate into the atmosphere, rather than persisting in surface waters or soils (ATSDR 1993g); however, VOCs, like xylenes, can pose a drinking water hazard when they occur in groundwater.

Like benzene and toluene, xylenes are fairly volatile, and significant xylenes tend to quickly evaporate if exposed to the atmosphere (ATSDR 1993g). However, xylenes can be more persistent when in groundwater, sediment, or soil media not directly exposed to the atmosphere. Xylenes tend to migrate to groundwater, and persistence is an issue in groundwater, where in some cases, they may persist for months or years (ATSDR 1993g).

Most xylene in surface water evaporates into the air in less than a day. The rest of it biodegrades slowly into other chemicals. Plants, fish, and birds take up only very small amounts. Research has shown that it persists longer in groundwater than in lakes and rivers, probably because it can evaporate from surface water (ATSDR 1993g).

Xylene evaporates from soil surfaces. Xylene below the soil surface persists for several days and may travel down through the soil and enter groundwater. In soil and groundwater, it may be slowly biodegraded into less harmful compounds. It is not clearly known how long xylene trapped deep underground in soil or groundwater persists, but it may be months or years. Xylene persists longer in wet soil than in dry soil (ATSDR 1993g).

7.12.1 Plants

Field concentrations in shallow groundwater or pore water below 100 mg/L for any aqueous solution in contact with terrestrial plants are not considered to present an ecological risk. Toxicity of groundwater to plants may be affected by many variables (pH, Eh, cation exchange capacity, moisture content, organic content of soil, clay content of soil, differing sensitivities of various plants, and various other factors). Therefore, the solution benchmark should be used as a screening benchmark only, and site-specific tests would be necessary to develop a more rigorous bench mark for various combinations of specific soils and plant species (Will and Suter 1994).

Growth of the alga *Selenastrum capricornutum* was reduced by 50 percent after 72 hours of exposure to 3.2 to 4.9 mg/L of each of the xylene isomers. Exposure for 30 minutes to 300 mg/L resulted in a 65 to 100 percent kill of the freshwater macrophytes *Elodea spp.* and *Potamogeton* (Environment Canada 1993c).

7.12.2 Invertebrates

No information was identified on the effects of xylene on invertebrates.

7.12.3 Amphibians and Reptiles

No information was identified on the effects of xylene on amphibians and reptiles.

7.12.4 Fish and Aquatic Organisms

Xylenes are bioconcentrated in aquatic organisms to a limited extent. Although more information on bioconcentration would be helpful, the phenomenon of biomagnification is not expected to be important for xylene (ATSDR 1993g).

LC_{50} for *Carassius auratus* (goldfish) were 75.0, 30.55, and 36.81 mg/L (ppm) for 24-hour exposures; 25.1 and 36.81 mg/L for 48-hour exposure; 20.72 mg/L for a 72-hour exposure; and 36.81 mg/L for a 96-hour exposure (EPA 1997).

7.12.5 Birds

No information was identified on the effects of xylene on birds.

7.12.6 Mammals

Large amounts of xylene can cause changes in the liver and harmful effects in the kidneys, heart, lungs, and nervous system (ATSDR 1993g).

Long-term exposures of animals to low doses of xylene have not been well studied (ATSDR 1993g). Available animal data on the carcinogenicity of xylenes are inadequate to permit an evaluation (HSDB 1999).

Xylene does not appear to be particularly genotoxic (ATSDR 1993g). In limited studies to date, individual isomers were not found to be genotoxic when tested in a number of short-term tests (Fishbein 1985; HSDB 1999).

In rats, exposure to xylene (50 or 500 milligrams per cubic meter [mg/m^3]) resulted in embryotoxic and teratogenic effects. The brain, liver, lung, and heart were affected. The number of postimplantation losses increased by 9.7 and 168 percent in the 50- and 500-mg/m^3 xylene groups, respectively. The incidence of fetal skeletal abnormalities was increased by 62 and 177 percent (Mirkova and Others 1983; HSDB 1999).

The placental crossing of benzene and its alkyl derivatives, their embryotoxic effects, and incidence of fetal anomalies were investigated in rats, mice, and rabbits. In rats, all of the

components crossed the placenta and also appeared in the fetal blood and amniotic fluid. Concentrations were higher in the fetal blood than in the amniotic fluid, but both were lower than in the maternal blood. Xylenes and ethylbenzene increased the postimplantation loss. All of the organic solvents caused skeletal retardations of mouse fetuses and increased the incidence of retarded fetuses, at least at higher concentrations. The exposure of rabbits to 1,000 mg/m^3 of solvent caused a mild, toxic effect on mothers; fetal loss by abortion, and often a decrease in the weight of female fetus (Ungvary and Tatrai 1985; HSDB 1999).

8.0 REFERENCES

ATSDR. 1990a. "Toxicological Profile for Barium." USPHS. Atlanta, Georgia.

ATSDR. 1990b. "Toxicological Profile for Copper." USPHS. Atlanta, Georgia.

ATSDR. 1990c. "Toxicological Profile for Ethylbenzene." USPHS. Atlanta, Georgia.

ATSDR. 1991. "Toxicological Profile for Manganese." USPHS. Atlanta, Georgia

ATSDR. 1992a. "Toxicological Profile for Cobalt." USPHS. Atlanta, Georgia.

ATSDR. 1992b. "Toxicological Profile for Thallium." USPHS. Atlanta, Georgia.

ATSDR. 1992c. "Toxicological Profile for Vanadium." USPHS. Atlanta, Georgia.

ATSDR. 1992c. "Toxicological Profile for p,p'-DDT, DDE, DDD." USPHS. Atlanta, Georgia.

ATSDR. 1993a. "Toxicological Profile for Arsenic." USPHS. Atlanta, Georgia.

ATSDR. 1993c. "Toxicological Profile for Chromium." USPHS. Atlanta, Georgia.

ATSDR. 1993e. "Toxicological Profile for Nickel." USPHS. Atlanta, Georgia.

ATSDR. 1993f. "Toxicological Profile for Aldrin/Dieldrin." USPHS. Atlanta, Georgia.

ATSDR. 1993g. "Toxicological Profile for Xylenes." Atlanta, Georgia. 209 Pages plus Appendices.

ATSDR. 1994a. "Toxicological Profile for Chlordane." USPHS. Atlanta, Georgia.

ATSDR. 1994b. "Toxicological Profile forToluene." USPHS. TP-93/14. Atlanta, Georgia. 221 Pages.

ATSDR. 1995a. "Toxicological Profile for Polycyclic Aromatic Hydrocarbons." USPHS. Atlanta, Georgia.

ATSDR. 1995b. "Toxicological Profile for Diethylphthalate." USPHS. Atlanat, Georgia.

ATSDR. 1995c. "Toxicological Profile for Tetrachloroethylene." USPHS. Atlanta, Georgia.

ATSDR. 1996. "Toxicological profile for carbon disulfide." USPHS. Atlanta, Georgia.

ATSDR. 1999a. "Toxicological Profile for Cadmium." USPHS. Atlanta, Georgia.

ATSDR. 1999b. "Toxicological Profile for Lead." USPHS. Atlanta, Georgia.

ATSDR. 1999c. "Toxicological Profile for Chlorophenols." USPHS. Atlanta, Georgia.

ATSDR. 2001. "Toxicological Profile for Di-n-butyl-phthalate." USPHS. Atlanta, Georgia.

Alloway, B.J. (ed.). 1990. *Heavy Metals in Soils*. John Wiley & Sons. New York.

Amdur, M. O., J. Doull, and C.D. Klaassen. 1991. *Casarett and Doull's Toxicology: The Basic Science of Poisons, Fourth Edition*. McGraw-Hill Inc. New York.

American Medical Association (AMA). 1989. *Home Medical Encyclopedia*. Two Volumes. Random House Publishers. New York, New York. 1,184 Pages.

Balasubramanian, S., R. Pappathis, and S. P. Raj. 1995. "Bioconcentration of Zinc, Lead, and Chromium in Serially-Connected Sewage-Fed Fish Ponds." *Bioresource Technology*. Volume 51, No. 2-3. Pages 193 through 197.

Barrows, M.E., S.R. Petrocelli, K.J. Macek, and Others. 1978. "Bioconcentration and Elimination of Selected Water Pollutants by Bluegill Sunfish." Haque, R., Ed. Dynamics, Exposure and Hazard Assessment of Toxic Chemicals. Ann Arbor Science Publishers, Inc. Pages 379 through 392. Ann Arbor, Michigan.

Bartlett, R.J., and B. James. 1979. "Behavior of Chromium in Soils: III. Oxidation." *Journal of Environmental Quality*. Volume 8. Pages 31 through 35.

Beyer, W. N., G. H. Heinz, and A. W. Redmon-Norwood. 1996. *Environmental Contaminants in Wildlife: Interpreting Tissue Concentrations*. CRC Press Inc. Boca Raton, Florida.

Brooks, R.R. 1972. *Geobotany and Biogeochemistry in Mineral Exploration*. Harper and Row Publishers Inc. New York, New York. 290 Pages.

Broyer, T.C., C.M. Johnson, and R.P. Huston. 1972. "Selenium and Nutrition of *Astragalus*. I. Effects of Selenite or Selenate Supply on Growth and Selenium Content." *Plant Soil* 36:635-649.

Callahan, M.A., and Others. 1979. "Water-Related Fate of 129 Priority Pollutants, Volumes I and II." U.S. Environmental Protection Agency (EPA), Office of Water Planning and Standard, Washington, DC by Versar, Inc. EPA-440/4-79-029a and 029b.

Camardese, M.B., D.J. Hoffman, L.J. LeCaptain, and G.W. Pendleton. 1990. "Effects of Arsenate on Growth and Physiology in Mallard Ducks." *Environmental Toxicology and Chemistry*. Volume 9. Pages 785 through 795.

Chamey, A. N., and A. Taglietta. 1992. "Effects of pH, Barium and Copper on Intestinal Chloride Transport in the Winter Flounder (*Pseudoopleuronectes americanus*)." *Bulletin Mountain Desert Island Biological Laboratory*. Volume 31. Pages 60 through 61.

Chapman, W.H., and Others. 1968. "Concentration Factors of Chemical Elements in Edible Aquatic Organisms." Lawrence Livermore Radiation Laboratory. OCRL-50564.

Clansky, K.B., Ed. 1990. *Suspect Chemicals Sourcebook: A Guide to Industrial Chemicals Covered Under Major Federal Regulatory and Advisory Programs.* Roytech Publications, Inc. Burlingame, California. Section 3, Page 25.

Considine, D.M. 1976. *Van Nostrand's Scientific Encyclopedia, 5th Edition.* Van Nostrand/Reinhold Company. New York, New York.

Curtin, D., Ryan, J., and Chaudhary, R.A. 1980. "Manganese Adsorption and Desorption in Calcareous Lebanese Soils." *Soil Sci. Soc. Am. J.* Volume 44. Pages 947 through 950.

Dabney, B. 1994. "Reprotext Data Base." *TOMES ™ REPROTEXT Electronic Database, Tomes Plus ™ CD-ROM, Volume 22.* Micromedex Inc. Denver, Colorado.

Department of Health and Human Services (DHHS) and EPA. 1987. "Notice of the First Priority List of Hazardous Substances that Will be the Subject of Toxicological Profiles." *Federal Register.* 52:12866-12874.

Diamond, J. M., E.L. Winchester, D.G. Mackler, W.J. Rasnake, J.K. Fanelli, and D. Gruber. 1992. "Toxicity of Cobalt to Freshwater Indicator Species as a Function of Water Hardness." *Aquatic Toxicology* (Amsterdam). Volume 22, No. 3. Pages 163 through 180.

Domingo, J.L. 1994. "Metal-induced Developmental Toxicity in Mammals: A Review." *Journal of Toxicology and Environmental Health.* Volume 42. Pages 123 through 141.

Domingo, J.L., J.L. Paternain, J.M. Llobet, and J. Corbella. 1985. "Effects of Cobalt on Postnatal Development and Late Gestation in Rats Upon Oral Administration." *Rev. Esp. Physiol.* Volume 41. Pages 293-298.

Eisler, R. 1985a. "Cadmium Hazards to Fish, Wildlife, and Invertebrates: A Synoptic Review." U.S. Fish and Wildlife Service (USFWS). Biological Report 85(1.2).

Eisler, R. 1985b. "Selenium Hazards to Fish, Wildlife, and Invertebrates: A Synoptic Review." U.S. Fish and Wildlife Service. (USFWS). Biological Report 85 (1.5) Report No. 5.

Eisler, R. 1986a. "Chromium Hazards to Fish, Wildlife, and Invertebrates: A Synoptic Review." USFWS. Biol. Rep. 85(1.6). 60 Pages.

Eisler, R. 1986b. "Polychlorinated Biphenyl Hazards to Fish, Wildlife, and Invertebrates: A Synoptic Review." USFWS. Biological Report 85(1.7).

Eisler, R. 1987. "Polycyclic Aromatic Hydrocarbon Hazards to Fish, Wildlife, and Invertebrates: A Synoptic Review." USFWS. Biological Report 85(1.11).

Eisler, R. 1988a. "Arsenic Hazards to Fish, Wildlife, and Invertebrates: A Synoptic Review." USFWS. Biological Report 85(1.12).

Eisler, R. 1988b. "Lead Hazards to Fish, Wildlife, and Invertebrates: A Synoptic Review." USFWS. Biological Report 85(1.14).

Eisler, R. 1990. "Chlordane Hazards to Fish, Wildlife, and Invertebrates: A Synoptic Review." USFWS. Biological Report 85(1.21).

Eisler, R. 1993. "Zinc Hazards to Fish, Wildlife, and Invertebrates: A Synoptic Review." USFWS. Biological Report 10.

Environment Canada. 1993a. "Priority Substances List Assessment Report: Tetrachloroethylene." 55 Pages. Available from Commercial Chemicals Branch, Environment Canada, 14th Floor, Place Vincent Massey, 351 St. Joseph Boulevard, Hull, Quebec, Canada KIA OH3.

Environment Canada. 1993b. "Priority Substances List Assessment Report on Toluene." 26 Pages. Available from Chemicals Evaluation Division, Environment Canada, Quebec, Canada.

Environment Canada. 1993c. "Priority Substances List Assessment Report, Xylenes." 32 Pages. Available from Commercial Chemicals Division, Environment Canada, 351 St. Joseph Boulevard Hull, Quebec, Canada KIA OH3.

Environment Canada. 1994a. "Priority Substances List Assessment Report: Nickel and Its Compounds." Canadian Environmental Protection Act. National Printers (Ottawa) Inc.

Environment Canada. 1994b. "Priority Substances List Assessment Report, Polycyclic Aromatic Hydrocarbons." Minister of Supply and Services. Canada.

Evans, R. D., D. Andrews, and R. J. Cornett. 1988. "Chemical Fractionation and Bioavailability of Cobalt-60 to Benthic Deposit Feeders." *Canadian Journal of Fish and Aquatic Science*. Volume 45. Pages 228-236.

Fernandes, J.C., and F.S. Henriques. 1991. "Biochemical, Physiological, and Structural Effects of Excess Copper in Plants." *Botony Reviews* 57(3):246-272.

Fishbein, L. 1985. *Science Total Environment.* Volume 43, No. 1-2: Pages 165 through 83

Fleishman, S. 1988. "Chapter on Isomers." *Electronic Encyclopedia* ™. The 21 Volume Academic American Publishing, Inc., on CD-ROM, © 1988 Grolier Electronic Publishing, Inc. Danbury, Connecticut. Written Permission to Excerpt Copyright Material Granted to Roy Irwin, Conditioned on Proper Documentation of the Source as the Electronic Encyclopedia of Grolier Electronic Publishing, Inc.

Flora, M.D., T.E. Ricketts, J. Wilson and S. Kunkle. 1984. "Water Quality Criteria: An Overview for Park Natural Resources Specialists." WRFSL Report No. 84-4. Water Resources Field Support Laboratory. National Park Service. Colorado State University. Fort Collins, Colorado.

Forsyth, D.J, T.J. Peterle, and W. Bandy. 1983. "Persistence and Transfer of CI-DDT in the Soil and Biota of an Old Field Ecosystem: A Six Year Balance Study." *Ecology*. 64: 1620-1636.

Foy, C.D., R.L. Chaney, and M.C. White. 1978. "The Physiology of Metal Toxicity in Plants." *Ann. Review Plant Physiol.* Volume 29. Pages 511 through 566.

Goodman, L.S., and A. Gilman., Eds. 1975. *The Pharmacological Basis of Therapeutics, 5th Ed.* Macmillan Publishing Co., Inc. New York, New York.

Grolier Electronic Publishing. 1988. "Chapter on Chromium." *Electronic Encyclopedia* ™. The 21-Volume Academic American Encyclopedia on CD-ROM, © 1988 Grolier Electronic Publishing, Inc. Danbury, Connecticut. Written Permission to Excerpt Copyright Material Granted to Roy Irwin, Conditioned on Proper Documentation of the Source as the Electronic Encyclopedia of Grolier Electronic Publishing, Inc.

Hall, R.J. 1980. "Effects of Environmental Contaminants on Reptiles: A Review." U.S. Department of the Interior. USFWS. Special Scientific Report. Wildlife No. 228. Washington, DC.

Hansen, L.G. 1994. "Halogenated Aromatic Compounds." *Basic Environmental Toxicology*. Editors: L.G. Cockerhamand B.S. Shane. CRC Press. Pages 199 through 230.

Hazardous Substance Databank (HSDB). 1999. "Hazardous Substance Databank." National Library of Medicine. National Toxicology Information Program. Bethesda, Maryland.

Hellou, J., and P. Yeats. 2000. "Contaminants Research: Chemical Awareness for a Sustainable Environment." *Canadian Chemical News*. November/December. Pages 16 through 17.

Hem, J.D. 1989. "Study and Interpretation of the Chemical Characteristics of Natural Water, 3rd Edition." U.S. Geological Survey (USGS) Water-Supply Paper 2253. Government Printing Office. Available from the Distribution Branch, Text Products Section, USGS. 263 Pages. Alexandria, Virginia.

Hemstock, G.A, and G.F. Low. 1953. "Mechanisms Responsible for Retention of Manganese in the Colloidal Fraction of Soil." *Soil Science*. Volume 76. Pages 331 through 343.

Hilton, J.W., W.J. Bettger. 1988. *Aquatic Toxicology*. Volume 12, No. 1. Pages 63 through 72.

Hoffman, D.J., B.A. Rattner, G.A. Burton, Jr., and J.C. Cairns, Jr. (Eds). 1995. *Handbook of Ecotoxicology*. Lewis Publishers, Inc. Boca Raton, Florida.

Hollins, J.G., and R.S. McCullough. 1971. "Radiation Dosimetry of Internal Contamination by Inorganic Compounds of Cobalt: An Analysis of Cobalt Metabolism in Rats." *Health Physics*. Volume 21. Pages 233 through 246.

Horne, M.T., and W.A. Dunson. 1995. "Effects of Low pH, Metals, and Water Hardness on Larval Amphibians. *Archives of Environmental Contamination and Toxicology.* Volume 29. Pages 500 through 505.

International Agency Research Cancer (IARC). 1973. "Monographs on the Evaluation of the Carcinogenic Risk of Chemicals to Man." International Agency Research Cancer. Volume 3. Pages 46 through 68.

IARC and World Health Organization (WHO). 1983. "IARC Monographs on the Evaluation of Carcinogenic Risk of Chemicals to Man." *International Agency for Research on Cancer.* Geneva, Switzerland. Volume 32. Pages 239 through 245; Supplement 7, Page 59.

International Copper Association (ICA). 1992. "The Biological Importance of Copper - A Literature Review." International Copper Association, Limited.

Jamil, K., and S. Hussain. 1992. "Biotransfer of Metals to the Insect *Neochetina eichhornae* via Aquatic Plants." *Archives of Environmental Contamination and Toxicology.* Volume 22. Pages 459 through 463.

Jarvis, S.C., and D.C. Whitehead. 1983. The Absorption, Distribution and Concentration of Copper in White Clover Grown on a Range of Soils. *Plant Soil.* Volume 75. Pages 427 through 434.

Jenkins, D.W. 1980. "Biological Monitoring of Toxic Trace Metals. Volume 2: Toxic Trace Metals in Plants and Animals of the World." EPA 600\3-80-090.

Jenkins, D.W. 1981. "Ediological Monitoring of Toxic Trace Elements." EPA Report 600/S3-80-090. Pages 1 through 9.

Joardan, M., and A. Sharma. 1990. "Comparison of Clastogenicity of Inorganic Manganese Administered in Cationic and Anionic Forms in Vivo." *Mutation Research.* Volume 240. Pages 159 through 63.

Jones, R. E. 1990. "Hexavalent Chrome: Threshold Concept for Carcinogenicity." *Biomedical-Environmental-Science.* Volume 3. Pages 20-34.

Kabata-Pendias, A., and H. Pendias. 1984. *Trace Elements in Soils and Plants.* CRC Press, Inc. Boca Raton, Florida.

Kabata-Pendias, A., and H. Pendias. 1992. *Trace Elements in Soils and Plants.* CRC Press, Inc. Boca Raton, FL.

Kafafi, S.A., H.Y. Afeefy, A.H. Ali, H.K. Said, and G. Kafafi. 1993. "Binding of Polychlorinated Biphenyls to the Aryl hydrocarbon Receptor." *Environmental Health Perspectives.* Volume 101. Pages 422 through 425.

Kawano, M., S. Matsushita, T. Inoue, H. Tanaka, and R. Tatsukawa. 1986. "Biological Accumulation of Chlordane Compounds in Marine Organisms from Northern North Pacific and Bering Sea." *Marine Pollution Bulletin.* Volume 17, No. 11. Pages 512 through 516.

Keith, L.H., and W.A. Telliard. 1979. "Priority Pollutants: I- A Perspective View." *Environmental Science and Toxicology.* Volume 13. Pages 416 through 423.

Kerr, J.A. 1988. "Chapter on Vanadium." *The Electronic Encyclopedia* ™. The 21-Volume Academic American Encyclopedia on CD-ROM, © 1988 Grolier Electronic Publishing, Inc. Danbury, Connecticut. Written Permission to Excerpt Copyright Material Granted to Roy Irwin, Conditioned on Proper Documentation of the Source as *The Electronic Encyclopedia* of Grolier Electronic Publishing, Inc.

Killey, R.W.D., J.O. McHugh, and D.R. Champ. 1984. "Subsurface Cobalt-60 Migration from a Low-level Waste Disposal Site." *Environmental Science and Technology.* Volume 6. Pages 28 through 41.

Kirk-Othmer. 1965. "Copper." *Encyclopedia of Chemical Technology.* John Wiley and Sons. 2nd Edition. Volume 6. New York, New York.

Klassen, C.D., M.O. Amdur, and J. Doull (Eds). 1991. *Casarett and Doull's Toxicology*, 4th Edition, Perganom Press of the Maxwell Macmillan Perganom Publishing Company. New York, New York. 1033 Pages.

Koeppe, D.E. 1981. *Lead: Understanding the Minimal Toxicity of Lead in Plants. In Effects of Heavy Metal Pollution on Plans, Vol. 1. Effects of Trace Metals on Plant Function.* N. W. Lepp (ed) Applied Science Publishers. New Jersey. Pages 55 through 76.

Laskey, J.W., and F.W. Edens. 1985. "Effects of Chronic High-level Manganese Exposure on Male Behavior in the Japanese Quail." (*Coturnix coturnix japonica*). *Poultry Science.* Volume 64. Pages 579 through 84.

Lay, J.P., and Others. 1984. *Archives Environmental Contamination and Toxicology.* Volume 13, No. 2. Pages 135 through 42.

Leland, H.V., and J.S. Kuwabara. 1985. "Trace metals." G.M. Rand and S.R. Petrocelli, Eds., *Fundamentals of Aquatic Toxicology.* Hemisphere Publishing Company. New York, New York. 666 Pages.

Lewis, R.J., Sr. 1993. *Hazardous Chemicals Desk Reference. 3rd Edition.* Vos Nostrand Reinhold Publishers. New York, New York. 1,742 Pages.

Lewis, R.J., Sr. and R.L. Tatken, Eds. 1989. Registry of Toxic Effects of Chemical Substances. Online Ed. National Institute for Occupational Safety and Health. Cincinnati, Ohio. FE3150000. June 6.

Long, E., and L.G. Morgan. 1990. "The Potential for Biological Effects of Sediment-Sorbed Contaminants Tested in the National Status and Trends Program." *NOAA Technical Memorandum* NOS OMA 52, National Ocean Service. Seattle, Washington. 175 Pages.

Luckey, T.D., and B. Venugopal. 1977. *Metal Toxicology in Mammals, 1.* Plennum Press. New York, New York.

Macapinlac, M.P., W.N. Pearson, and W.J. Derby. 1966. "Some Characteristics of Zinc Deficiency in the Albino Rat." *Zinc Metabolism.* A.S. Prassad, Editor Charles Thomas. Springfield, Illinois.

MacCrady, J. and S. Maggard. 1993. "Uptake and Photodegradation of 2,3,7,8-tetrachlorodibenzo-p-dioxin Sorbed to Grass Foliage." *Environmental Science and Technology.* Volume 27. Pages 343 through 350.

MacDonald, A. 1993. "Development of an Approach to the Assessment of Sediment Quality in Florida Coastal Waters." Florida Department of Environmental Regulation, Tallahassee, Florida. MacDonald Environmental Sciences Ltd. Ladysmith, British Columbia, Canada.

Mahoney, J.S. 1978. "Environmentally Acquired Lead, Cadmium, and Manganese in the Cattle Egret, *Bubulcus ibis*." Thesis, Master of Science. The University of Texas Health Science Center at Houston. June. 57 pages.

Manahan, S.E. 1992. *Toxicological Chemistry.* Lewis Publishers, an Imprint of CRC Press. Boca Raton, Florida, 449 Pages.

McGrath, S.P. 1982. "The Uptake and Translocation of Tri- and Hexa-Valent Chromium and Effects on the Growth of Oat in Flowing Nutrient Solution. *New Phytology.* Volume 92. Pages 381 through 390.

McLaren, J.W., D.M. Lawson, and R.S. Swift. 1986. "Sorption and Desorption of Cobalt by Soils and Soil Components." *Journal of Soil Science.* Volume 37. Pages 413-426.

Meister, R.T. 1995. *Farm Chemicals Handbook. Volume 81.* Meister Publishing Company. Ohio. Pages 97 through 100.

Meyers, E. 1990. *Chemistry of Hazardous Materials.* Prentice Hall Career and Technology. Prentice-Hall Inc. Englewood Cliffs, New Jersey. 509 Pages.

Miles, C.D., J.R. Brandle, D.J. Daniel, O. Chu-Der, P.D. Schnore, and D.J. Uhlik. 1972. "Inhibition of Photosystem II in Isolated Chloroplasts by Lead." *Plant Phyusiology* Volume 49. Pages 820 through 825.

Mirkova E., and Others. 1983. *Journal of Hygiene, Epidemiology, Microbiology, and Immunology.* Volume 27, No. 3. Pages 337 through 43.

Moore, S.B., J. Winckell, S.J. Detwiler, S.A. Klasing, P.A. Gaul, N.R. Kanim, B. E. Kesser, A.B. Debeveck, K. Beardsley, and L.K. Puckett. 1990. "Fish and Wildlife Resources and Agricultural Drainage in the San Joaquin Valley, California. San Joaquin Drainage Program, Sacramento, California." Six Sections and Two Appendixes. Portions Reproduced with the permission of Senior Author Stephen Moore, USFWS, Regional Office. Portland, Oregon.

Morishita, T. and J. K. Boratynski. 1992. "Accumulation of Cadmium and Other Metals in Organs of Plants Growing Around Metal Smelters in Japan." Soil Science and Plant Nutrition. Volume 38, Number 4. Pages 781-785.

Morrell, B.G., N.W. Lepp, and D.A. Phipps. 1985. "Vanadium Uptake by Higher Plants: Some Recent Developments." *Environmental Geochemistry and Health*. Volume 8. Pages 14 through 18.

Mukherji, S., and B. Das Gupta. 1972. "Characterization of Copper Toxicity in Lettuce Seedlings." *Physiology of Plants*. Volume 27. Pages 126 through 129.

National Academy of Sciences (NAS). 1980. "Mineral Tolerances of Domestic Animals." NAS. National Research Council. Washington, DC.

National Research Council Canada (NRCC). 1976. "Effects of Chromium in the Canadian Environment." NRCC No. 15017. Page 15.

NRCC. 1977. *Drinking Water & Health Volume 1*. National Academy Press. Washington, DC.

NRCC. 1980. "Effects of Vanadium in the Canadian Environment" NRCC No. 18132. Page 38.

National Toxicology Program (NTP) Chemical Repository. 2001. Printouts for Carbon Disulfide from the NTP Website. Online Address: http://ntp server.niehs.nih.gov/htdocs/CHEM_H&S/NTP_Chem7/Radian75-15-0.html

Osborn, D., A.S. Cooke, and S. Freestone. 1981. "Histology of a Teratogenic Effect of DDT on Rana Temporaria Tadpoles." *Environmental Pollution* (Series A). Volume 25, No. 4. Pages 305 through 319.

Owen, C.A. 1981. *Copper Deficiency and Toxicity: Acquired and Inherited, in Plants, Animals, and Man.* Noyes Publications. New Jersey. Pages 84 through 102.

Paternain, J.L., and Others. 1987. *Rev Esp Fisiol.* Volume 43, No. 2. Pages 223 through 228.

Paternain, J.L., and J.L. Domingo. 1988. "Developmental Toxicity of Cobalt in the Rat." *Journal of Toxicology and Environmental Health*. Volume 24. Pages 193-200.

Patnaik, P. 1992. *A Comprehensive Guide to the Hazardous Properties of Chemical Substances*. Van Nostrand Reinhold Publishers. New York, New York. 763 Pages.

Perelman, A. I. 1967. *Geochemistry of Epigenesis*. Plenum Press, New York.

Perwack, J. and Others. 1980. "Exposure and Risk Assessment for Copper." EPA. EPA-400/4-81-015. NTIS PB85-211985.

Peterle, T.J. 1991. *Wildlife Toxicology*. Van Nostrand Reinhold. New York.

Peterson, P.J., and C.A. Girling. 1981. *Other Trace Metals. In Effects of Heavy Metal Pollution on Plants, Volume 1. Effects of Trace Metals on Plant Function.* N.W. Lepp (Editor). Applied Science Publishers. New Jersey. Pages 279 through 342.

Power, T., K.L. Clark, A. Harfenist, and D.B. Peakall. 1989. "A Review and Evaluation of the Amphibian Toxicological Literature Technical Report No. 61." Canadian Wildlife Service, Headquarters.

Pulsford, A.L., P. Ryan, and J.A. Nott. 1992. "Metals and Melanomacrophages in Flounder, Platichthys Flesus, Spleen and Kidney." *Journal of the Marine Biology Association.* United Kingdom. Volume 72, No. 2. Pages 483 through 498.

Rai, D., and J. M. Zachara. 1984. "Chemical Attenuation Rates, Coefficients, and Constants in Leachate Migration. Volume I: A Critical Review." Electric Power Research Institute, Palo Alto, California.

Raymont, J.E.G. 1972. "Pollution in Southampton Water." *Proceedings of the Royal Society Series*. Series B. Volume 180, No. 106. Pages 451 through 468.

Robinson, W.B. 1948. "Thallium and Compound 1080 Impregnated Stations in Coyote Control." *Journal of Wildlife Management.* Volume 12, No. 3. Pages 279 through 295.

Romney, E.M., and J.D. Childress. 1965. "Effects of Beryllium in Plants and Soil." *Soil Science.* Volume 100, No. 2. Pages 210 through 17.

Rompala, J.M., F.W. Rutosky, and D.J. Putnam. 1984. "Concentrations of Environmental Contaminants from Selected Waters in Pennsylvania." USFWS Report. State College, Pensylvania.

Sadiq, M. 1992. *Toxic Metal Chemistry in Marine Environments*. Marcel Dekker. New York.

Seidenberg, J.M, and Others. 1986. "Validation of an in vivo Developmental Toxicity Screen in the Mouse." *Teratogen Carcinogen Mutagen.* Volume 6. Pages 361 through 374.

Scheuhammer, A.M. 1987. "The Chronic Toxicity of Aluminum, Cadmium, Mercury, and Lead in Birds: A Review." *Environmental Pollution.* Volume 46. Pages 263 through 295.

Schiffer, D.M. 1989. "Effects of Highway Runoff on the Quality of Water and Bed Sediments of Two Wetlands in Central Florida." USGS Water-Resources Investigations Report 88-4200. Department of the Interior. USGS. Tallahassee, Florida. 63 Pages.

Shaw, A.J. (Ed.). 1990. *Heavy Metal Tolerance in Plants: Evolutionary Aspects*. CRC Press, Inc. Boca Raton, Florida.

Shepard, T.H. 1986. *Catalog of Teratogenic Agents*. 5th Edition. The Johns Hopkins University Press. Baltimore, Maryland.

Sindayigaya, E., R.V. Cauwenbergh, H. Robberecht, and H. Deelstra. 1994. "Copper, Zinc, Manganese, Iron, Lead, Cadmium, Mercury and Arsenic in Fish from Lake Tanganyika, Burundi." *The Science of the Total Environment*. Volume 144. Pages 103 through 115.

Smith, I.C., and B.L. Carson. 1981. *Trace Metals in the Environment, Volume 6: Cobalt, An Appraisal of Environmental Exposure*. Ann Arbor Science Publications, MI.

Smith, K.L., G.W. Bryan, and J.L. Harwood. 1985. "Changes in Endogenous Fatty Acids and Lipid Synthesis Associated with Copper Pollution in *Fucus*." *Journal of Experimental Botany*. Volume 36. Pages 663 through 669.

Smith, S.P.J., and K.H.M. Kwan. 1989. "Chromium Accumulation, Transport and Toxicity in Plants." *Toxicology and Environmental Chemistry*. Volume 24. Pages 241 through 251.

Southern, L.L., and D.H. Baker. 1983. "Excess Manganese Ingestion in the Chick." *Poultry Science*. Volume 62. Pages 642 through 646.

Stanley, T.R., Jr., J.W. Spann, G.J. Smith, and R. Rosscoe. 1994. "Main and Interactive Effects of Arsenic and Selenium on Mallard Reproduction and Duckling Growth and Survival." *Archives of Environmental Contamination and Toxicology*. Volume 26. Pages 444 through 451.

Stickel, L.F. 1968. "Organochlorine Pesticides in the Environment." USFWS. Special Scientific Report No. 119. Washington, D.C.

Talmage, S.S., and B.T. Walton. 1991. "Small Mammals as Monitors of Environmental Contaminants." *Review of Environmental Contamination and Toxicology*. Volume 119. Pages 47 through 145.

Taylor, D.M. 1962. "The Absorption of Cobalt from the Gastrointestinal Tract of the Rat." *Physico. Med. Biol.* Volume 6. Pages 445 through 451.

Taylor, K., and Others. 1992. "Mass Emissions Reduction Strategy for Selenium, Staff Report." Basin Planning and Protection Unit. San Francisco Regional Water Quality Control Board. Oakland, California. October 12.

Thibodeaux, L.J. 1979. *Chemodynamics*. Wiley & Sons. New York.

Trelease, S.F., A. A. Di Somma, and A.L. Jacobs. 1960. "Seleno-Amino Acid Found in *Astragalus bisulcatus*." *Science*. Volume 132. Page 618.

U.S. Environmental Protection Agency (EPA). 1975. "DDT: A Review of Scientific and Economic Aspects of the Decision to Ban Its Use as a Pesticide." EPA. Washington, D.C. EPA-540/1-75-022. July.

EPA. 1976. "Effects of Exposure to Heavy Metals on Selected Fresh Water Fish: Toxicity of Copper, Cadmium, Chromium and Lead to Eggs and Fry of Seven Fish Species." Environmental Research Laboratory. Office of Research and Development. Duluth, Minnesota. 600/3-76-105.

EPA. 1981. Health Assessment Document for Cadmium. EPA 60/8-81023. EPA. Washington, D.C.

EPA. 1986. "Quality Criteria for Water." EPA Report 440/5-86-001. Office of Water Regulations and Standards. Washington, DC.

EPA. 1988. State Water Quality Standards Summaries. EPA Publication Number 440/5-88-031. EPA Office of Water, Washington, D.C. Available through NTIS, Springfield, Virginia. Order No. PB89-141634.

EPA. 1991. Water Quality Criteria Summary List (Poster Format). Based on Quality Criteria for Water and Updates 1 (1986), 2 (1987), and 3 (1990). Distributed by the EPA, Office of Science and Technology, Health and Ecological Criteria Division, Ecological Risk Assessment Branch (WH-585), Human risk Assessment Branch (WH-550D), 401 M Streets S.W., Washington, DC. 20460. Published May 1.

EPA. 1992. "Quality Criteria for Water." EPA. Office of Water. Washington, DC.

EPA. 1994. Oil and Hazardous Material/Technical Assistance Data System (OHM/TADS). Public Domain Information Available from the Government; Additional Commercially Available Copies of this Public Domain Information Have Included (But May Not Be Limited To, No Government Dedorsment Implied): The Tomes Plus™ CD-ROM Database Volume 22, Micromedex Inc. Denver, Colorado.

EPA. 1995a. Great Lakes Water Quality Initiative Criteria Documents for the Protection of Wildlife. DDT, Mercury, 2,3,7,8-TCDD, PCBs. EPA 820-B-95-008.

EPA. 1995b. "Estimating Exposure to Dioxin-Like Compounds. Volume 1: Executive Summary." Exposure Assessment Group. Office of Health and Environmental Assessment. Washington, D.C. EPA/600/6-88/005.

EPA. 1995c. "Region IX Preliminary Remediation Goals (PRGs) Second Half 1995." EPA. San Francisco, California.

EPA. 1996. EPA Integrated Risk Information System (IRIS) Electronic Database. Public Domain Information Available from the Government. EPA Criteria and Assessment Office. Cincinnati, Ohio.

EPA. 1997. Aquatic Toxicity Information Retrieval Database (AQUIRE). EPA, ERL-Duluth, Duluth, Minnesota. Information Obtained from EPA Internet Source. Republished AQUIRE Information is also Available from Private Vendors.

EPA. 1999. Integrated Risk Information System (IRIS) Online Database. Washington, DC.

EPA. 2003. EcoTox Database. Online Address: http://www.epa.gov/cgi-bin/ecotox_quick_search.

U.S. National Library of Medicine. 2002. Specialized Information Services. Hazardous Substances Database, Website Address: http://toxnet.nlm.nih.gov/cgi-bin/sis/htmlgen?HSDB. National Institutes of Health, Department of Health & Human Services.

Ungvary G., E. Tatrai. 1985. *Archives of Toxicology*. Volume 8. Pages 425 through 30.

Venugopal, B., and T.D. Luckey. 1978. *Metal Toxicity in Mammals, 2*. Plenum Press. New York.

Wallace, A., and E.M. Romney. 1977. "Roots of Higher Plants as a Barrier to Translocation of Some Metals to Shoots of Plants." *Biological Implications of Metals in the Environment. Proceeding of the Fifteenth Annual Hanford Life Sciences Symposium, Richland, Washington.* Technical Information Center, ERDA, Washington, D.C. Pages 370 through 379.

Will, M.E., and G.W. Suter II. 1994. "Toxicological Benchmarks for Screening Potential Contaminants of Concern for Effects on Terrestrial Plants: 1994 Revision." Publication No. ES/ER/TM-85/R1. Oak Ridge National Laboratory. Oak Ridge, Tennessee.

Williams, R.B., and M.B. Murdoch. 1969. "The Potential Importance of *Spartina alterniflora* in Conveying Zinc, Manganese, and Iron into Estuarine Food Chains." *Proceeding of the Second National Symposium on Radioecolog*. D.J. Nelson and F.C. Evans (eds.). Pages 431 through 439.

Wong, M.H., and A.D. Bradshaw. 1982. "A Comparison of the Toxicity of Heavy Metals, Using Root Elongation of Rye Grass, Lolium Perenne. *New Phytology*. Volume 92. Pages 255 through 61.

White, D.H., K.A. King, and R.M. Prouty. 1980. "Significance of Organochlorine and Heavy Metal Residues in Wintering Shorebirds at Corpus Christi, Texas, 1976-1977." *Pesticide Monitoring Journal*. Volume 14. Pages 58-63.

Whitworth, M.R., G.W. Pendleton, D.J. Hoffman, and M.B. Camardese. 1991. "Effects of Dietary Boron and Arsenic on the Behavior of Mallard Ducklings." *Environmental Toxicology and Chemistry*. Volume IO. Pages 911-916.

APPENDIX J
RESPONSE TO COMMENTS

RESPONSES TO EPA COMMENTS ON THE DRAFT OU-2A REMEDIAL INVESTIGATION REPORT, SITES 9, 13, 19, 22, AND 23 ALAMEDA POINT, CALIFORNIA, FEBRUARY 26, 2004

This document presents the U.S. Department of the Navy's (Navy) responses to comments from the U.S. Environmental Protection Agency (EPA) on the "Draft OU-2A Remedial Investigation Report, Sites 9, 13, 19, 22, and 23, Alameda Point, Alameda, California," dated February 26, 2004. The Navy received the comments addressed below from EPA on June 17, 2004. References used to prepare these responses are listed after the last response.

GLOBAL GENERAL COMMENTS

1. **Comment:** **The Draft Remedial Investigation Report (the RI) indicates that the storm sewer system may be a preferential pathway for the discharge of groundwater contaminant plumes into the Oakland Inner Harbor or the Bay, but it does not appear that the amount of sampling near storm sewers and catch basins is adequate to address potential concerns. In addition, since the storm sewer system was used for industrial waste disposal prior to 1972, it should be considered as a potential source of contamination, but the RI does not indicate whether sediment has been removed from the storm sewers and catch basins. Please discuss whether potentially-contaminated sediment has been removed from the storm sewers and, if not, why storm sewers are not considered to be a potential source of contamination. Also, please discuss whether sufficient sampling has been done to address whether the storm drains are potential pathways for discharge of groundwater contamination into the Oakland Inner Harbor or the Bay.**

   Response: The discussion of the storm sewer evaluations will be expanded. The remedial investigation (RI) report already discusses sewer cleaning and replacement activity; however, more detail will be added to the draft final document. The storm sewers are not a continuing source of groundwater contamination because they have not been used for industrial waste disposal since 1972 and were cleaned in 1991, 1995, and 1997.

2. **Comment:** **The RI presents a statistical summary of data in which validated data are screened against preliminary remediation goals (PRGs). However, it appears that much of the RI data has not been included in the risk assessment data set. This is confirmed by the fact that generally less than 50 percent of the validated samples for the RI were used for the risk assessment as shown in the following table:**

Percentage of Validated RI Data included in the Risk Assessment

Analyte	Site 9 Soil	Site 9 Ground-water	Site 13 Soil	Site 13 Ground-water	Site 19 Soil	Site 19 Ground-water	Site 22 Soil	Site 22 Ground-water	Site 23 Soil	Site 23 Ground-water
VOCs	58.7	27.7	52.4	50.4	39.2	45.2	51.4	60.4	32.8	38.3
SVOCs	52.4	52.9	51.5	42.9	53.8	41	61.3	41.7? 51.7? or 71.4?*	47.7	26.7
PAHs	100	-	122	-	100	-	100	0?	100	-
Pesti-cides/ PCBs	0	-	51.4	42.2	46.5	0	55.7	0	41.5	16.7
Metals	60.9	60	57.6	50	45.2	44.2	54.9	34.0	44.6	34.2
Dioxins	-	-	0	-	-	-	-	-	0	-

*** It is unclear how many samples were collected.**

It is unclear why validated data are useful for the RI, but not for the risk assessment. It is also unclear why the number of samples cited in the text does not match the statistical summary tables (e.g., for Site 22, were 21, 29, or 36 groundwater samples analyzed for SVOCs? Were some of these samples only analyzed for PAHs?). It is not clear why pesticide and PCB data was eliminated entirely from the risk assessment data set for some sites. The rationale for the apparent elimination of benzo(a)pyrene (BaP) and other polynuclear aromatic hydrocarbons (PAHs) in soil from the risk assessment data set at Site 9 is unclear, since BaP was detected at 1300 micrograms per kilogram (ug/kg) which is significantly above the PRG of 62 ug/kg. Similarly, it appears that the maximum concentration of benzene used to assess the risk associated with Site 13 soil was 1,000 ug/kg, but the maximum concentration of benzene was 31,000 ug/kg and there were several samples with concentrations over 1,000 ug/kg. This will result in underestimating the risk. The explanation that the data quality objectives (DQOs) for different investigations are different is not sufficient, because all validated data should be acceptable for quantitative evaluation of risks. In addition, in one case, more samples were apparently used for the risk assessment than were validated for the RI. Further, the text in several sections indicates that soil data from areas with petroleum saturate soils and that groundwater data from areas with floating product were eliminated from the risk assessment data set. Since these areas may have the highest levels of contamination, elimination of this data would likely result in significantly underestimating the calculated risk. Given the disparity between the two data sets, we have little confidence that the risk assessments accurately assess potential health risks associated with these sites. Consequently, review of the risk assessment focused

only on general procedural aspects and a detailed review of the risk assessment has been postponed until the Navy provides an explanation for the disparity between the data acceptable for the RI and the data set used for the risk assessment. Please either provide a detailed analysis that shows why each sample was or was not included in the risk assessment data set to demonstrate that the risk assessment data set is representative or revise the risk assessments so that they include some or all of the excluded data.

Response: The percentages shown in the above table were apparently calculated using the statistical summary tables, which include both validated and unvalidated data; therefore, these percentages do not represent validated data. The percentages of validated data used in the risk assessments are much higher than those shown in the table above, and these percentages demonstrate that most of the validated data generated during the RI were used in the risk assessments. The types of validated data rejected from the risk assessments are summarized below.

- *Soil data collected at depths greater than 8 feet below ground surface (bgs)* - Potential health risks can be accurately assessed only if the data set reflects the exposure area and current conditions. For soil, the exposure areas are defined as between 0 and 2 feet bgs, between 0 and 4 feet bgs, and between 0 and 8 feet bgs. Although soil data were collected from below 8 feet bgs to characterize the site, potential receptors are not expected to have contact with this soil.
- *Groundwater data collected outside of the plume (except at Sites 19 and 13 for reasons clearly stated in the RI)* - If non-plume data had been included in the risk assessments, risk estimates would be less conservative.
- *Groundwater data for samples superseded by more recent sample data that better represent current site conditions* - Health risks are only posed by contaminants currently present in groundwater.
- *Data from soils removed from a site*
- *Soil and groundwater data collected as part of the total petroleum hydrocarbon (TPH) investigations* - The data quality objectives (DQO) of the TPH Program involve TPH contamination; therefore, inclusion of data collected to evaluate discrete TPH releases could overestimate the risk from Comprehensive Environmental Response, Compensation, and Liability Act (CERCLA) releases. Instead, risk from TPH components was appropriately assessed using the TPH Strategy (see Appendix F of the RI report), which allows risk from discrete TPH releases to be addressed under the appropriate regulatory program.
- *Data collected to characterize conditions within the sewer system or oil-water separators (OWS)*

- *Soil and groundwater data collected as part of the environmental baseline survey (EBS) investigations* - EBS data are more of a screening nature to investigate potential releases regulated under CERCLA, the TPH Program, or the Resource Conservation Recovery Act (RCRA), and automatic inclusion of these data could add more uncertainty to the risk assessments and potentially over- or underestimate risk from CERCLA releases. Validated EBS data were evaluated for possible inclusion in the risk assessments but were found to be insufficient to supplement exposure area assessments; therefore, exclusion of EBS data had minimal impact on the risk assessment conclusions.

Validated data were limited for some analytical groups because analyses of soil and groundwater samples typically focused only on contaminants used or previously detected at the sites (see Sections 5.3, 6.3, 7.3, 8.3, and 9.3 of the RI report). As explained in the RI report, the Navy does not perceive this approach as resulting in a data gap; rather, this approach is the result of a biased and phased sampling conducted over a period of greater than 10 years with agency oversight and approval. This approach allows stakeholders opportunities to provide feedback on the suitability or adequacy of sampling plans, data collected, and the need to collect additional data to identify releases and complete the RI report.

A discussion of data selection for use in the Site 9 risk assessments is presented below as an example of the approach used during the RI. No soil samples were collected from Site 9 for analysis of polychlorinated biphenyls (PCB) or pesticides. Site 9 was used for parking aircraft until 1958, when the paint stripping facility was constructed. The paint stripping facility included paved aprons around the buildings and other improvements; therefore, the likelihood of the use or release of PCBs or pesticides at the site is remote.

Typically, direct-push groundwater data are not included in risk assessments; however, for this report, direct-push groundwater data were included because a lack of monitoring well data in the concentrated plume areas may have resulted in a data set that did not represent "reasonable maximum" conditions and therefore would underestimate the risk.

The table below illustrates that 15 of the 60 validated data points for volatile organic compounds (VOC) in soil from Site 9 were collected at depths greater than 8 feet bgs. By excluding the data from samples collected from below 8 feet bgs, the actual available percentage of validated data that were used in the human health risk assessment (HHRA) to represent VOCs in soil at Site 9 reaches 80 percent (36 out of 45). In this case, 20 percent (9 sample results) of the available data were excluded

because the data were collected under the EBS investigation and were considered to be more suitable for screening purposes rather than risk assessment. Automatic inclusion of these data could add more uncertainty to the risk assessments and potentially over- or underestimate the risk from CERCLA releases.

SELECTION OF SITE 9 VOC DATA FOR INCLUSION IN THE RISK ASSESSMENTS

Media	Total Data[a]	Validated Data				Excluded GW Data[b]	Exposure Area[c]				Greater than 8 feet bgs
		Total Data	EBS Data	TPH Data	CERCLA Data		0 to 2 feet bgs	0 to 4 feet bgs	0 to 8 feet bgs	Plume	
Soil	63	60	9	0	51	NA	7	20	36	NA	15
GW	158	76	4	0	72	28	NA	NA	NA	44	NA

Notes:

a Includes validated and unvalidated data collected as a part of the EBS and CERCLA investigations; not included are rejected data (R qualifier), QC sample results (including duplicates, blanks, and rinsates), and data for soil no longer present at the site because of removal actions (defined in the database as ex situ).

b Excluded either because superseded by newer monitoring well data or because outside plume boundary

c Number of samples included in the risk assessments.

bgs	Below ground surface
CERCLA	Comprehensive Environmental Response, Compensation, and Liability Act
EBS	Environmental baseline survey
GW	Groundwater
NA	Not applicable
QC	Quality control
TPH	Total petroleum hydrocarbon

Also, as the table above shows, 158 groundwater samples at Site 9 were analyzed for VOCs. Of these, 76 sample results were validated, and 72 of these validated results were for samples collected under CERCLA investigations; however, only 44 of these 72 sample results represent recent data collected from within the plume boundary.

As this example shows, the Navy applied a consistent and rational set of criteria for selecting validated data to be used in the risk assessments. For the exposure scenarios evaluated in the RI report that represent potential future risk, the data used in the risk assessments allowed accurate assessment of potential risk to human health and the environment. Data were appropriately selected using the process described in the RI report, which is consistent with EPA's "Risk Assessment Guidance for Superfund, Volume I: Human Health Evaluation Manual (Part A)" (EPA 1989) and "Data Quality Assessment Guidance" (EPA 2000). As described further below and shown in Figure 1 and Table 1 (see Appendixes A and B to this response), data were included in the risk assessments if they met the following criteria:

- Validated
- Consistent with the DQOs for the RI
- Representative of current site conditions
- Within the defined exposure areas

3. **Comment:** **The criterion that data must meet the DQOs for the RI in order to be considered appropriate for use in the risk assessments requires further justification. If samples are analyzed with suitable analytical methods and detection limits, and the data are validated, the data should be included in the risk assessment data set. The use of this criterion apparently resulted in dropping data from the risk assessment that should have been included. Please eliminate the quoted criterion or provide justification for using it; this justification should include a detailed analysis that clearly demonstrates why each sample that is eliminated is unsuitable.**

Response: It is not always appropriate to include all validated data in the risk assessments. As stated in the risk assessment approach, data were included in the risk assessment provided they fulfilled certain assumptions regarding potential exposure to the chemicals present in soil or groundwater. For example, only soil data from 0 to 8 feet bgs were used for the risk assessment. Thus, although data for samples collected at depths greater than 8 feet bgs may have been validated, those data were not used in the risk assessment because there was no exposure pathway. For groundwater, a conservative approach was adopted to assess potential exposure from domestic use of the shallow groundwater aquifer. Only results for samples collected from within the plume boundary (defined by results for samples with nondetected concentrations) were used to develop the exposure point concentrations (EPC). Nondetected results for samples outside of the plume were not used, although the data may be validated. This approach is conservative (as requested by the regulatory agencies) for evaluating risk from domestic use of groundwater; however, this approach would lead to the exclusion of some validated data from use in the risk assessment. See also the response to Global General Comment No. 2 above (page 3).

Data collected for the TPH investigations were used for the specific objective of characterizing TPH releases. The Navy wished to avoid situations where risk from TPH constituents increased the site risk to a point that would trigger further action even if CERCLA constituent levels were below further action levels. The Navy excluded EBS data only after evaluating the entire data set.

4. **Comment:** **Every chemical detected above background levels or PRGs in soil or groundwater should be discussed in the nature and extent section of each site. The discussion of the nature and extent of contamination should be independent of the risk assessment; therefore, chemicals should not be excluded from the nature and extent section because they are believed to not pose risk at the site. It is inappropriate to characterize the nature and extent of contamination based on chemicals that have already undergone a risk assessment and are considered to be risk drivers, particularly since the data used in the risk assessment are only a subset of the validated data considered acceptable for use in the RI. The discussion of nature and extent should not be limited to only the chemicals believed or known to have been used at the site given the fact that it is impossible to reconstruct a complete site history and the potential that other chemicals may have been used at these sites. Please revise the nature and extent sections to include all chemicals detected above PRGs.**

Response: The Navy has revised the draft final RI report to add additional tables and figures that better demonstrate the iterative approach to investigating these sites. The Navy chose to include only risk driver chemicals in order to limit the length of the nature and extent discussion and still focus on chemicals identified as posing significant risk at each site. The RI report's data summaries and appendices assist reviewers in evaluating whether enough data were collected to produce meaningful risk estimates on chemicals found not to be risk drivers. The industrial nature of the sites precludes discussion of every chemical detected at concentrations exceeding preliminary remediation goals (PRG) and background levels because the number of compounds at concentrations exceeding these levels would diminish the reviewer's ability to evaluate the sites. Furthermore, a HHRA is a better tool to identify risk at the sites.

The RI used an approach consistent with EPA guidance. The National Oil and Hazardous Substances Pollution Contingency Plan (NCP) and EPA guidance for conducting RIs and feasibility studies (FS) under CERCLA (EPA 1988) state that the RI report should discuss the nature and extent of risks posed by hazardous substances. According to the NCP, in characterizing the site, the lead agency shall characterize the nature and threat posed by the hazardous substances and hazardous materials and gather data necessary to assess the extent to which the release poses a threat to human health and the environment (Title 40 of the *Code of Federal Regulations* [CFR], Section 300.430 [d][2]). In developing its guidance for the RI/ FS process, EPA declared that the purposes of the RI/FS process were to characterize the nature and extent of risks posed by uncontrolled hazardous waste sites and to evaluate potential remedial options (EPA 1988). Statutes and guidance therefore apparently intend that the RI report should identify the nature and extent of "contamination,"

which is defined by the risk assessments. The RI report should therefore focus on hazardous substances that pose risk (as defined by the risk assessment, not by exceedence of PRG levels).

The nature and extent sections discuss the types and concentrations of all chemicals identified as risk drivers and of other chemicals believed to have been used at the sites, even chemicals detected at concentrations below PRGs. The risk assessments are used to focus more detailed discussions. Because the risk assessment results reflect the best estimate of risk based on current site conditions, it is more appropriate to use these results to focus the nature and extent discussions rather than the results of comparisons between site data and PRGs.

Also, it should be noted that the data for all chemicals were evaluated in the risk assessments. The only exceptions were when no sample results were validated for a particular analytical group or all chemicals were nondetected. The rationale for not collecting samples was based on site histories, interviews conducted during the initial assessment survey (IAS) and EBS sampling efforts, and the likelihood of the chemical being present at the site.

There is a concern regarding whether the chemicals not identified as risk drivers are represented appropriately in the risk assessment. Typically, detection limits greater than PRGs would be a concern for risk assessment purposes; however, the risk assessment included with this RI used a statistical technique to derive conservative EPCs from data that included elevated detection limits. Appendices E and G of the RI report present calculation details. The risks posed by chemicals excluded from the nature and extent discussion are below the threshold levels for selecting risk drivers (an excess lifetime cancer risk [ELCR] not exceeding 10^{-6} for carcinogens and a hazard index [HI] not exceeding 1 for noncarcinogens).

5. **Comment:** **The text discusses landscaping and open space, but the figures do not show the extent of landscaping or open space that is not paved. As a result, it is not possible to verify statements in the text related to open spaces, to evaluate areas that are potential habitat and those areas from which contaminated surface soil may erode and run-off into storm sewers. Please provide a figure for each site that shows the location of landscaping and open space. Please also indicate where open space is paved and where it is unpaved.**

Response: The site features figure for each site will be revised to show the types of ground cover. This feature will not be repeated on every figure because it will make the figures difficult to read.

6. **Comment:** **Since many results have been inappropriately eliminated from the risk assessment, the calculated risk cannot be considered representative of the risk associated with each site. Please re-calculate the risks associated with soil and groundwater at each site and use the re-calculated risk to determine whether the site and media should be evaluated in an FS or recommended for no further action.**

Response: See the response to Global General Comment No. 2 above (page 3).

SPECIFIC COMMENTS ON NON-SITE-SPECIFIC SECTIONS

1. **Comment:** **<u>Executive Summary, Page ES-3</u>: This section states that "according to the reuse plans for Alameda Point, commercial/industrial and residential scenarios represent the most likely future uses at Site 9." However, Page ES-2 states that "the residential exposure scenario was not considered a primary exposure scenario." Please provide clarification regarding the likelihood of the residential scenario in the future at OU-2.**

Response: The text will be revised to indicate that the likelihood of the residential scenario cannot be predicted accurately at this time. The published reuse plan calls for business park/light industrial, open space, and civic/institutional support uses (EDAW 1996). The residential scenario was evaluated, and the results of potential risks to hypothetical future residents are presented in the RI report.

2. **Comment:** **<u>Section 1.3.3, Historical Operations and General Site Descriptions for OU-2A, Pages 1-4 and 1-5</u>: The historical use of explosives and asbestos at OU-2A is mentioned in this section, but it does not appear that samples taken at OU-2A were analyzed for compounds associated with ordnance or asbestos. Please explain why samples were not analyzed for such compounds.**

Response: The text states, "The Weapons Department was responsible for receiving, issuing, storing, and shipping ammunition, ammunition components, and explosives. The department also operated a small arms firing range and saluting battery and coordinated ordnance disposal with the explosive ordnance disposal (EOD) detachment."

Explosives were present or periodically stored at Operable Unit (OU)-2A; however, the explosives were encased in completed warheads, and no manufacturing or servicing of explosive components was performed at OU-2A. Because of the lack of opportunity for release, soil and groundwater samples were not analyzed for explosives.

Asbestos may be present in building material used at the installation and as pipe insulation. The Navy instituted an asbestos operation and maintenance (O&M) plan to deal with on-site asbestos material. There is no record of a release of asbestos-containing material at OU-2A; therefore, it is not appropriate to sample for asbestos at OU-2A.

3. **Comment:** **<u>Section 3.6.6.2, Identification of Chemicals of Potential Concern, Page 3-21</u>: According to the text, analytes detected in less than 5 percent of samples were excluded as contaminants of potential concern (COPCs) because chemicals detected infrequently may be sampling and analytical artifacts or spurious data. However, infrequent detection may indicate the presence of a hot spot, and additional sampling would be required to determine the extent of contamination. Please explain how the Navy will ensure that hot spots are adequately addressed when these results were deleted from the risk assessment data set.**

Response: The criteria used to screen chemicals of potential concern (COPC) for OU-2A include essential nutrient status, EPA Region IX PRGs, and frequency of detection. For OU-2A, only one detected chemical (toxaphene) at one site was excluded as a COPC based on frequency of detection alone (see the explanation in the next paragraph).

For Site 23 soil samples collected from 0 to 8 feet bgs, toxaphene was excluded as a COPC based on frequency of detection only. Specifically, the toxaphene result for sample BOR-26 from 6 to 6.5 feet bgs of 1,400 micrograms per kilogram (μg/kg) was excluded and toxaphene results were footnoted with the following footer: "Although toxaphene was detected) in a single sample (from 21 total) it was not considered to be related to historical processes at the site but is likely a remnant of historical pesticide use."

The Navy evaluated all data and applied a risk-based approach to site characterization. This risk-based approach in consistent with EPA guidelines, and the Navy completed additional evaluation of chemicals known to be used at the sites even if they were not considered risk drivers. This approach provides additional confidence that hot spots are not an issue at the sites.

4. **Comment:** **<u>Section 3.6.6.3, Exposure Assessment, Page 3-24</u>: Construction workers' potential exposure to groundwater was considered insignificant and not assessed due to the short duration and limited extent expected. However, it seems that the significance of this exposure depends on the type and degree of contamination of the groundwater and should therefore be included in the risk assessment to ensure that risk is not underestimated. Likewise, the assumptions**

regarding the homegrown produce pathway (e.g. the pathway is incomplete and exposures would be insignificant even if it were complete) that were used to defend the exclusion of this pathway in the human health risk assessment may lead to an underestimation of risk if the future use changes.

Response: Construction workers would dewater the trench and would not be working within the groundwater. Although construction workers may have transient contact with groundwater, this exposure was considered insignificant because of the very short duration and limited extent expected.

The Navy will include an evaluation of exposure to homegrown produce in the draft final RI report.

5. **Comment:** **<u>Section 4.2.2.1, Groundwater Flow in the FWBZ, Pages 4-4 and 4-5</u>: Groundwater elevation data collected over a period of four days to four weeks should not be used to construct groundwater elevation contours and make conclusions regarding groundwater flow. This data cannot easily be corrected for tidal influence and used to construct meaningful maps because there may be other factors that influence the groundwater elevations in site wells when measurements are collected over an extended period of time. The significant differences between Figures 4-13, 4-14, and 4-15 (Groundwater Level Elevations for June 2002, December 2002, and April 2003) confirm that data cannot be collected over more than a 12 hour period. Ideally, all groundwater elevation measurements would be collected during a few hours of the same stage of a tidal cycle. Please delete Figures 4-13 and 4-14 from the RI or explain why this data should be considered acceptable. Also, please explain why the data was not collected over a shorter time period.**

Response: The Navy agrees that the best groundwater flow maps use data collected over a short period of time, and the RI report states that the Figure 4-15 is the most representative groundwater flow map; however, Figure 4-15 shows groundwater flow impact from several remediation systems, including systems around Building 397 and east of Building 530. Figures 4-13 and 4-14 will be removed from the document.

6. **Comment:** **<u>Section 4.2.4.2, Vertical Hydraulic Gradients, pages 4-6 and 4-7, and Section 2.5</u>, Tidal Influence, Page 4-7: Data tables or graphs to support the statements made in these sections were not provided. As a result, it is not possible to verify the accuracy of the statements made in these sections. Please provide tables summarizing vertical**

hydraulic gradient calculations and graphs and calculations to support the discussion of tidal influence.

Response: Data tables and calculations will be added to the draft final RI report.

7. **Comment:** **<u>Figures 4-2 through 4-9</u>: Boring S09-DGS-DP04 is depicted on both Figure 4-2 and 4-3. The cross sections should be identical since they are based on the same boring log, but the clayey sand starts at a shallower depth on Figure 4-2. In addition, boring D04-01 is depicted on both Figure 4-5 and 4-6, but the layer of clayey sands at approximately 60 feet below mean sea level (-60 ft MSL) is much thicker on Figure 4-6. Also, clayey sands are depicted at approximately -80 ft MSL elevation on Figure 4-6 but are not shown on Figure 4-5. On Figures 4-8 and 4-9, B07C-13 is depicted differently. Please eliminate these inconsistencies and ensure that the cross sections accurately reflect the information in the boring logs.**

Response: The figures will be revised as necessary in the draft final RI report.

8. **Comment:** **<u>Figure 4-2, Geological Cross Section A-A' Site 9</u>: At CPT-S09-11, the interval between approximately -20 ft MSL and -30 ft MSL is depicted as clayey sands, but a review of the boring log shows that this interval is not predominantly clayey sand. Please resolve this discrepancy.**

Response: The figures will be revised as necessary in the draft final RI report.

9. **Comment:** **<u>Figure 4-2, Geological Cross Section A-A' Site 9</u>: The bottom of boring CPT-S09-08 is depicted as clayey sands but the boring log indicates that silty sand to sandy silt is present in this lithologic interval. Please resolve this discrepancy.**

Response: The figures will be revised as necessary in the draft final RI report.

10. **Comment:** **<u>Figure 4-2, Geological Cross Section A-A' Site 9</u>: The figure indicates that the interval between approximately 0 and -30 ft MSL in the vicinity of S09-DGS-DP03 is characterized by poorly graded sands, but the boring log indicates that this interval is made up of clayey sand. In addition, the area between approximately -65 ft MSL and the bottom of the boring is characterized as inorganic silts on the figure but as clay on the boring log. Please revise the figure accordingly.**

Response: The figures will be revised as necessary in the draft final RI report.

11. **Comment:** **<u>Figure 4-5, Geological Cross Section B-B' Site 13</u>: The Merritt Sand zone beneath borings BOR-7, BOR-14, and B13-42 is depicted as SP (poorly graded sands) even though these borings are shallow and their respective boring logs therefore do not provide evidence that this zone is actually poorly graded sands. The boring logs associated with Figures 4-2 and 4-3 indicate that there is no reason to assume that the Merritt Sand consists of poorly graded sands. Please explain why it is assumed the Merritt Sand is poorly graded sand or delete the symbol from areas where the actual lithology of the Merritt Sand is unknown on this figure.**

Response: The figures will be revised as necessary in the draft final RI report.

12. **Comment:** **<u>Figure 4-5, Geological Cross Section B-B' Site 13</u>: The first type of soil encountered at B-IMF-08 is not defined in the legend. Please ensure that all patterns used in the figure are defined in the legend. If this soil type is supposed to represent sandy clays, please make sure the cross-hatches are oriented in the correct direction.**

Response: The figures will be revised as necessary in the draft final RI report.

13. **Comment:** **<u>Figure 4-6, Geological Cross Section A-A' Site 19</u>: At boring CPT-S19-03, the lithology at a depth of approximately 7-15 feet is depicted as clayey sands on the figure but described mostly as sand, silty sand, or sandy silt on the boring log. Please ensure that the boring logs and figures are consistent.**

Response: The figures will be revised as necessary in the draft final RI report.

14. **Comment:** **<u>Figure 4-7, Geological Cross Section B-B' Site 19</u>: It is unclear why the bottom of boring BD13-16 (where the fill ends and the Merritt Sand begins) is not depicted as clayey sand on this figure. This interval is described as clayey sand in the boring log and is surrounded by clayey sand in the figure. Please resolve this discrepancy.**

Response: The figures will be revised as necessary in the draft final RI report.

15. **Comment:** **<u>Figure 4-8, Geological Cross Section A-A' Site 22</u>: The bottom of boring CPT-S07C-01 is depicted as SP (poorly graded sands) on the figure but is described as silty sand to sandy silt on the boring log. Please ensure that the boring logs and figures are consistent.**

Response: The figures will be revised as necessary in the draft final RI report.

16. **Comment:** **<u>Figure 4-9, Geological Cross Section B-B' Site 22</u>: Fill is depicted differently on this cross section than it is on the other cross sections. Generally fill material is depicted as white space labeled "Fill" regardless of the type of soil that makes up the fill material. However, at borings B547-6 and MW547-2, the fill material is depicted as silty sands that are part of the Merritt Sand layer even though the boring logs indicate that these silty sands are fill material and that the Merritt Sand does not begin until a depth of approximately 7.5 feet. Please revise the figure to represent fill material in a consistent manner.**

Response: The figures will be revised as necessary in the draft final RI report.

17. **Comment:** **<u>Figure 4-11, Geological Cross Section B-B' Site 23</u>: On each cross section figure, fill material is generally depicted as white space labeled "Fill" regardless of the type of soil that constitutes the fill material. However, on this figure, each boring shows the type of soil that constitutes the fill material. Please use a consistent approach for the portrayal of fill material or explain why the fill material is depicted differently on this particular figure.**

Response: The figures will be revised as necessary in the draft final RI report.

18. **Comment:** **<u>Figure 4-12, Conceptual Hydrogeologic Model for the Southeastern Region</u>: The black dots located beneath Site 16 in the First Water Bearing Zone are not defined in the legend. Also, the legend shows that the Installation Restoration Site is represented by blue dots on a white background, but this symbol was not used found on the figure.**

Response: The figures will be revised as necessary in the draft final RI report.

19. **Comment:** **<u>Figure 4-13, Groundwater Level Elevations Without Tidal Corrections, June 2002</u>: It is extremely unlikely that the sharp curves in the groundwater contour line near wells MW547-3 and M07C-08 represent actual conditions. Groundwater tends to assume the flattest possible surface and the contours should reflect this. Please isolate anomalies in separate contours.**

Response: As stated in the response to Specific Comments on Non-Site-Specific Sections No. 5, this figure will be removed from the document.

20. **Comment:** **<u>Figure 4-15, Groundwater Level Elevations Without Tidal Corrections, April 2003</u>: It is unclear why these contours were drawn**

without tidal corrections even though the April 2003 data was corrected for tidal influence according to the text in Section 4.2.2.1. Additionally, the sharp curves in the groundwater contour lines near wells MW360-2, MW-1, M07C-07 and possibly MWOR-1 probably do not accurately represent site conditions. Groundwater tends to assume the flattest possible surface and the contours should reflect this. It is unclear why these wells were not drawn with isolated contours like other wells on this figure (e.g., 372-MW1 and MW0R-3). Please revise this figure to isolate abrupt changes in groundwater elevation within separate contours.

Response: The depths to water measurements on Figure 4-15 are not tidally corrected because only four wells in shallow groundwater at OU-2A are influenced by tidal fluctuations.

Groundwater elevations at OU-2A are being influenced by active remediation involving the pumping and removal of groundwater at Site 22 and west of Building 397 at Site 13. The groundwater pumping is creating a cone of depression around these remedial systems, and the depths to water posted and contoured are accurate portrayals of April 2003 site conditions. Contours will be reviewed and adjusted as necessary for the draft final RI report.

SITE 9 GENERAL COMMENTS

1. **Comment:** **It is not clear why all chemicals that exceeded PRGs are not listed in the Soil Analytical Results For Chemicals Used At Site 9 summary table on page 5-13. PAHs are often associated with fuels, which were used and spilled at Site 9, and were detected above PRGs, but this information is not included in the analytical data summary table for Site 9 soil. For example, BaP was detected at concentrations up to 1,300 micrograms per kilogram (ug/kg), which is above the PRG of 62 ug/kg. Please include all chemicals that were detected above the PRG in the table on page 5-13 and discuss the location of the detections in the text. Other compounds that were detected above PRGs that are not included in this table include arsenic and thallium. Since these compounds may have been used at this site, please also include them in the summary table on page 5-13.**

Response: The table on page 5-13 is intended to demonstrate that compounds used at site were further evaluated. These elevated polynuclear aromatic hydrocarbon (PAH) results have been replaced by the 2003 PAH study data. Although PAHs are associated with jet fuel, which has reportedly been released at Site 9, PAHs are also associated with the Marsh Crust. There are no records of arsenic or thallium use at Building 410. The table will not be revised to include other compounds.

2. **Comment:** **Thirty-two samples had BaP above the PRG, but there is no figure that shows the extent of PAHs. BaP is a risk driver, and the "Nature and Extent Approach" on Page 3-17 states that site-specific figures will be prepared for risk drivers. Please provide a figure showing the distribution of PAHs in soil in BaP equivalents.**

Response: Table 5-1 incorrectly included historical PAH data that were replaced with PAH data from the 2003 Basewide PAH sampling event. The table in the draft final RI report will not include these data because they have been superseded by more representative data.

To evaluate the nature and extent of PAHs in soil at OU-2A, the Navy considered both the risk values calculated in the HHRA and ecological risk assessment (ERA) as well as the risk-based action level developed by the Base Realignment and Closure Act (BRAC) Closure Team (BCT). Benzo(a)pyrene (BaP) equivalents are calculated by multiplying the detected concentrations of the carcinogenic PAHs by appropriate toxicity equivalency factors. The toxicity equivalency factors are based on the carcinogenic potency of each compound relative to BaP (EPA 1993). The seven carcinogenic PAH compounds and their toxicity equivalency factors summarized in the table below.

CARCINOGENIC PAHs AND TOXICITY EQUIVALENCY FACTORS

Compound	Toxicity Equivalency Factor
Benzo(a)pyrene	1.0
Benz(a)anthracene	0.1
Benzo(b)fluoranthene	0.1
Benzo(k)fluoranthene	0.01
Chrysene	0.001
Dibenz(a,h)anthracene	1.0
Indeno(1,2,3-c,d)pyrene	0.1

At Site 9, none of the results for samples collected in 2003 exceeded the Alameda Point BaP action levels of 0.62 or 1.0 milligram per kilogram (mg/kg) and PAHs in soil were not identifited as risk drivers. The highest BaP concentration detected during the 2003 investigation was 0.062 mg/kg. The 2003 investigation results are considered more representative of site conditions.

3. **Comment:** **There were numerous detections of PAHs and some detections of antimony, arsenic, cadmium, and thallium above the groundwater PRGs, but these results are not summarized in the table on page 5-15. Please include the PAHs and metals that were detected above the**

PRGs in the groundwater analytical results summary table on page 5-15.

Response: The table presented on page 5-15 of the draft report is not a PRG screening table (as stated in the table footnote). The table presents additional information about compounds used at the site to supplement the Nature and Extent of risk drivers evaluation. The RI followed a risk-based approach not based solely on exceeding the PRG at a single point. See responses to Global General Comments No. 2 and 4.

4. **Comment:** **The extent of 1,1-dichloroethane (1,1-DCA), 1,2-dichloroethene (1,2-DCE), xylenes, and naphthalene has not been delineated in groundwater to the south and southwest of OWS-410A and OWS-410B. Since the highest concentrations of 1,2-DCE (2,400 ug/L) and naphthalene (29,000 ug/L) are located upgradient of these two OWSs in the vicinity of SHP-S09-10, groundwater samples have not been collected south or southwest of the OWSs, and groundwater flow is to the west-southwest, it is possible that the contaminant plume extends southwest of the two OWSs. Also, it is possible that the source of contamination is east of SHP-S09-10, but no samples have been collected east or northeast of this location. Please discuss how these data gaps will be addressed.**

Response: The locations of the OWSs are misplotted on the figures. One OWS is located northeast of MW410-3, and another is located south of the southwest corner of Building 410. Groundwater in the vicinity of the eastern OWS is evaluated by MW410-3. The figures will be revised as needed in the draft final RI report.

SITE 9 SPECIFIC COMMENTS

1. **Comment:** **<u>Section 5.1.3, Regulatory History, Page 5-3</u>: No investigations have been conducted under the TPH program at Site 9, but the text in Section 5.1.2 states that numerous undocumented releases of aircraft fuel have occurred inside Building 410. Please explain whether investigations under the TPH program are planned for Site 9.**

Response: Although no investigations have been conducted under the TPH Program at Site 9, VOCs in soil and groundwater have been evaluated at the site. Recently, floating petroleum product has been detected at the site (see the first full paragraph on page 5-10 of the RI report). The Navy plans to conduct a removal action under the TPH Program to remove floating product at the site.

2. **Comment:** **<u>Section 5.2.2, Follow-On Investigation,1994, Pages 5-5 and 5-6</u>: Appendix E includes analytical results from a sediment sample, but this sample does not appear to have been included in the discussion of Follow-On Investigation Activities or to have been discussed in the text. This sample was contaminated with PAHs, phenol and metals. Please explain why this sediment sample was collected and discuss the analytical results in the text.**

Response: The text will be revised to discuss the results of this sample and the storm sewer evaluation in more detail.

3. **Comment:** **<u>Section 5.2.2, Storm Sewer Investigation, 2000, Page 5-7</u>: The text states that the storm sewer report recommended that samples be collected from catch basin 3-J, but analytical results from this sample are not discussed in the text. Please discuss the analytical results in the text.**

Response: The text will be revised to discuss the results of this sample.

4. **Comment:** **<u>Page 5-8, PAH Study, 2003 section, second sentence</u>: Please explain the correlation and connection between historical data and the number of samples subsequently taken at the IR site.**

Response: The historical data were used to scope the 2003 investigation. The data from the 2003 investigation should be considered replacement data. One of the sources of confusion in the RI report is the fact that historical data were presented in Tables 5-1, 6-1, 7-1, 8-1, and 9-1. The historical data will be included in the investigation-specific tables but removed from the total data summary tables in the draft final RI report.

5. **Comment:** **<u>Section 5.3.1, Potential Sources, Page 5-11</u>: The assumption that the Oil Water Separator(s) (OWS) located south of Building 410 are not considered to be potential sources is not supported by information in the text. Given the use of solvents and fuels at Site 9, it is not sufficient to conclude that visual observation and cleaning are sufficient to eliminate the OWS and washdown area as potential sources. This appears to be a data gap that should be investigated. Please delete the statement that the OWS and washdown area are not considered potential sources and explain how and when sampling will be conducted to evaluate whether contaminants were released to the environment in this area.**

Response: See the response to Site 9 General Comment No. 4 on page 18.

Similarly, the text indicates that IWTP-410 is not considered a source for site contamination, but there is no discussion of samples that were collected to confirm this statement. Please discuss analytical results from samples that were collected from soil and groundwater in the vicinity of IWTP-410 and the eight associated tanks that support the conclusion that IWTP-410 is not a source of site contamination or delete the statement that it is not a potential source of contamination and propose sampling to address this data gap.

Response: The California Department of Toxic Substances Control (DTSC) provided a letter of concurrence that the closure of IWTP 410 was complete. This letter states that no VOCs, semivolatile organic compounds (SVOC), or metals were present at concentrations greater than PRGs, which indicates that the IWTP is not a source of contamination at Site 9. The text will be revised to include this information.

6. **Comment:** **<u>Page 5-12, last paragraph, third sentence</u>: What removal actions were taken at this site? Please elaborate or revise the sentence.**

Response: No soil removal actions have occurred at this site. The sentence will be removed from the draft final RI report.

7. **Comment:** **<u>Section 5.3.2.1, Soil, Page 5-12</u>: Please discuss the implications for assessing extent of contamination and risk in instances where the laboratory detection limits exceeded residential PRGs. Also, the text states that data from locations that were excavated during removal actions was not included, but the text does not indicate that any soil removal actions were conducted. Please either delete this statement or discuss both the removal actions and sample locations that were removed.**

Response: Detection limits are used to assess the presence or absence of a compound, and PRGs are used to assist in identifying areas where chemical concentrations may pose a potential risk to human health or the environment. The DQOs for the various investigations included in the RI report require that detection limits meet the Contract Laboratory Program (CLP) standards, and for some of the investigations, detection limits were set using maximum contaminant limits (MCL) or PRGs so that potential risk areas could be identified and thoroughly investigated; however, the PRGs for some chemicals are lower than the detection limits achievable by modern laboratories, and the PRGs for other chemicals have been reduced to levels that are now below the detection limits used when a given site was investigated. (The Navy, BCT, and regulatory risk assessors have indicated that historic soil and groundwater data are acceptable to characterize risk and the nature and extent of contamination

at Alameda Point). Therefore, some, or occasionally all, of the analytical results for a given chemical are unable to demonstrate that all non-detections are below the respective PRG. For these chemicals, the Navy included all of the data in the risk assessment if at least one data point exceeded the detection limit (and thus was actually "detected" at the site) except for toxaphene (see the response to Global General Comment No. 4). For the other chemicals that were not "detected" at the site, the Navy used other information to determine if there was a realistic possibility that the chemical in question could have been used by the Navy or released at the site. If such possibility existed, the Navy included the chemical in the risk assessment using the methods described near the end of this response; if not, the chemical was excluded from the risk assessment.

It should be noted that some data used for this investigation are greater than 10 years old and that improvements in commercial laboratory method detection levels have occurred during that time. All phases of investigation at Alameda Point were subject to work plan submittals that outlined the laboratory standards that would be achieved. These standards were typically CLP standards created by EPA.

Several PRGs are not technically achievable even by today's commercial laboratory equipment when analyses are run for a full suite of compounds within the analyte group.

To make conservative estimates of risk, the Navy used a stochastic modeling technique to account for the uncertainty introduced by varying levels of left-censored (non-detect) data in calculating EPCs. This approach treats each censored datum as a random, uniform variable that can assume any value between zero and its respective reporting limit. Monte Carlo simulation is used to develop a distribution of the range of possible estimates for an upper confidence limit (UCL) of the mean using the "bounding" approach described in EPA (2002). The 95th percentile of this distribution is used as a conservative upper-bound estimate for the EPC. Use of random surrogate values for individual censored measurements can be applied in cases with single or multiple detection limits and yields conservative upper-bound estimates of the UCL that reduce the likelihood of underestimating the true mean concentration given the analytical uncertainties in the sample data.

The Navy will delete the text that discusses the removal of data in areas where soil was excavated from Site 9.

8. Comment: **<u>Section 5.3.2.1, Soil, Page 5-13</u>: Please explain how the risk assessments adequately characterize risk when only a small subset of the data is deemed suitable for the risk assessments. For example, in**

soil at Site 9, three samples for pesticides/PCBs were considered acceptable for the RI but none were included in the risk assessment.

Response: See the response to Global General Comment No. 2 on pages 3 through 5.

9. **Comment:** **<u>Section 5.3.2.2, Groundwater, Page 5-14</u>: The first sentence states that groundwater samples were analyzed for pesticides/PCBs, but the same paragraph states that no samples were analyzed for pesticides/PCBs. Please resolve this inconsistency and explain why no samples were analyzed for pesticides/PCBs.**

Response: No groundwater samples were analyzed for pesticides/PCBs. The text will be revised accordingly.

10. **Comment:** **<u>Page 5-15, paragraph following table</u>: The OWS are located above and upgradient of the areas of maximum VOC concentrations in the groundwater. EPA maintains that the OWSs may the source of contamination to groundwater and that the lack of soil and groundwater sampling directly beneath them is a data gap.**

Response: See the response to Site 9 General Comment No. 4 on page 18.

11. **Comment:** **<u>Page 5-15, last paragraph</u>: It is stated in the first paragraph on page 5-2 that methylene chloride was used as part of the paint stripping and aircraft cleaning operations conducted in Building 410. To discount this contaminant when it is present above PRGs, because there is no discernable pattern of distribution, is not justified. The lack of distribution patterns could be due to insufficient characterization. Methylene choride must be included in the risk assessment.**

Response: Methylene chloride was evaluated in the risk assessment. Of the 159 groundwater samples analyzed for methylene chloride, methylene chloride was detected in 40 groundwater samples; however, it was also present in the method blank ("B" qualified) for all of these samples. Only two of these samples (design data points 9-3 and 9S-CH2) contained methylene chloride at concentrations greater than the PRG. As stated in response to Global General Comment No. 2 on page 3, design data points were not validated and therefore not included in the risk assessment. Of the groundwater samples not detected for methylene chloride, only 15 had laboratory detection limits greater than the PRG of 4.3 micrograms per liter (µg/L). Of these 15 elevated detection limits, 11 were at 10 µg/L or less and 8 were 5 µg/L or less. Methylene chloride is not a risk in groundwater at Site 9.

The text will be revised to reflect the data evaluation summarized above.

12. **Comment:** **<u>Section 5.3.2.3, Soil Gas, Page 5-16</u>: The section on soil gas data is very brief and does not discuss the results from the one soil gas sample collected. Please explain why one soil gas sample was considered sufficient to characterize soil gas and describe the results from this sample. It appears that the detection limits set for the soil gas samples render this sampling effort mostly useless.**

Response: As stated in the RI report, soil gas data were collected to evaluate the risk from the vapor inhalation pathway. Soil gas data were not collected to characterize the nature and extent of contamination. This approach is consistent with the objectives presented in the final field sampling plan (FSP) for supplemental RI data gap sampling for OU-1 and OU-2 dated June 2001, which was approved by the agencies. Soil gas samples were collected from areas of known maximum soil or groundwater contamination at the time of sampling. The BCT (including DTSC's risk assessors) participated in the sampling location selection process and approved the work plan that outlines the DQOs for each sample. At the time of data collection, DTSC was aware of the laboratory detection limits and the plan for use of the data. In addition, based on the types of activities conducted at the sites, the shallow vadose zone, and soil and groundwater data collected at the sites, soil gas data are not necessary to characterize the site. Additional soil gas data will not be collected or used to characterize source areas.

13. **Comment:** **<u>Section 5.3.4, Background Evaluations, Page 5-16</u>: This text in this section states that barium and beryllium exceed background in soil but do not pose a risk at this site and that barium, chromium, copper, iron, selenium, and vanadium exceeded background in groundwater but do not pose a risk at this site. Please provide an explanation for why it is believed that these chemicals do not contribute to risk at this site. Also, since these metals are above background concentrations, they should be included in the nature and extent section.**

Response: These compounds were assessed in the HHRA and found to not contribute enough to the total site risk to be considered risk drivers. See the response to Global General Comment No. 4 on page 7 regarding the Navy's approach to completing this RI.

14. **Comment:** **<u>Page 5-16, Background Evaluation Section</u>: Arsenic is above background levels and needs to be included here.**

Response: The Navy disagrees with this comment. Background evaluations for arsenic in soil and groundwater samples collected at Site 9 determined that

site concentrations are statistically consistent with concentrations of arsenic in the ambient data set.

15. **Comment:** **<u>Page 5-16, last sentence</u>: It is not acceptable to have inorganics that exceed background be discounted from the nature and extent discussion and the risk assessment. The whole point of establishing background numbers is to determine whether an inorganic that is naturally occurring exceeds that level and therefore is considered a potential risk.**

Response: As stated in Section 3 and shown on Figure 3-3, inorganic compounds, , were not excluded from the risk assessment based on background. The background determination was used only to evaluate the likelihood of release. See the response to Global General Comment No. 4 for an explanation of why compounds that do not pose a risk were not included in discussions of the nature and extent of contamination.

16. **Comment:** **<u>Section 5.3.4, Background Evaluations, Page 5-17</u>: The text states that concentrations of aluminum are considered within the range of background for Alameda Point even though site concentrations reached a significantly higher maximum than background concentrations (17,400 mg/L and 3,970 mg/L, respectively). The text suggests that elevated aluminum concentrations are potentially due to reducing conditions associated with organic material present in the Bay Sediment Unit (BSU) and the march crust, but this is conjecture and not fact. Since the concentrations indicate that Site 9 aluminum concentrations do exceed background concentrations, please include aluminum in the nature and extent section of this document and delete the statement that aluminum was considered within the range of background concentrations.**

Response: Aluminum was considered in the risk assessment. A rationale for the elevated maximum concentrations is presented in the text following the quoted sentence in the RI report. The text has been revised to indicate that the aluminum concentration is considered to exceed the background level; however, this concentration does not contribute significantly to risk. See the response to Global General Comment No. 4 on Page 7 for an explanation of why only risk drivers are discussed.

17. **Comment:** **<u>Page 5-17, first paragraph</u>: If the frequency of detection of lead is greater than background, then the distribution must be different too, which indicates that it is not due to background.**

Response: The background data set was selected by the agencies from sampling locations collected across the entire base and reflects the full range of soil

concentrations that represent ambient conditions at Alameda Point. Because of the low detection frequencies in both the Site 9 and ambient data sets, comparison of the average or median concentrations of lead was not possible; however, comparison of the right-hand tails of the two distributions was accomplished using the quantile test. The results of this test clearly show that site concentrations of lead are below background. In order for site concentrations of lead to be statistically elevated relative to background, at least five of the highest eight measurements in the pooled site and background data set would need to come from the site data set. In this case, only two of the highest eight measurements come from Site 9, and the maximum detected background concentration (41 mg/kg) is almost double that measured at the site (22.2 mg/kg). Side-by-side outlier box plots and quantile tables indicate that the distribution of lead at Site 9 is well within ambient limits. Detection frequencies are compared as part of the Navy's protocol for evaluating background data, but interpretation of the results of this comparison requires caution. Comparison of detection frequencies alone using the test of proportions cannot be used to determine whether the distribution of measured concentrations at the site exceed background. An important assumption of the test of proportions is that the censoring mechanism is the same for both data populations, otherwise any observed differences may simply reflect differences in the reporting or detection limits. This approach also assumes that if a constituent is detected more frequently at a site, it is also likely that actual concentrations are higher relative to background. These assumptions are often incorrect and can lead to misleading conclusions, which is why multiple lines of evidence need to be examined and professional judgment should ultimately be used in making the final determination. In this case, the available evidence (that is, results of the quantile test and comparison of box plots and quantiles) suggests that concentrations of lead at Site 9 are below background.

18. Comment: **<u>Page 5-17, second paragraph</u>: It is unacceptable to state that inorganics exceed background concentrations and then discount them from the nature and extent discussion and the risk assessment. In addition, arsenic needs to be included in this list.**

Response: As stated in Section 3 and shown on Figure 3-3, inorganic compounds were not excluded from the risk assessment based on background. See the response to Global General Comment No. 4 on page 7) for an explanation of why compounds that do not pose a risk are not discussed in the nature and extent evaluation.

19. Comment: **<u>Page 5-17, third paragraph</u>: Why is 3,970 considered approximately the same as 17,400? The latter number is over four times larger than the first number which would lead to the conclusion that the numbers**

are not consistent with background and that aluminum should be considered in the risk assessment.

Response: The text will be revised to reflect that the statistical evaluation shows that aluminum concentrations exceed background. Aluminum was included in the risk assessment. A rationale for the elevated maximum concentrations is presented in the text following the quoted sentence. Even though aluminum concentrations were considered to be above background, they do not contribute significantly to risk.

20. **Comment:** **<u>Section 5.4, Nature and Extent of Chemicals in Soil and Groundwater, Page 5-18</u>: Page 5-18, Section 5.4: It is unacceptable to leave out contaminants above PRGs from the nature and extent discussion because they didn't show up in either soil of groundwater samples with sufficient frequency. In this section the case is made that PCP only shows up above the PRG in two out of 70 groundwater samples: therefore it isn't considered a risk driver. A quick glance at Table 5-4 shows that only 2 out of 70 samples for PCP in groundwater had detection limits set below the PRG. The next lowest detection limit was set approximately 50 times higher than the PRG and the maximum detection limit was set approximately 80,000 times higher. Its not too surprising that the remaining 68 out of 70 samples yielded non-detect. But, far from proving that the contaminant is not a concern at this site, it proves that the sampling techniques, specified laboratory standards and the thought put into defining COPCs are faulty. This exact problem is repeated so many times at each site, it would take pages and pages of comments to break out each specific example. The conclusion reached by EPA, however, is that whenever frequency of detection is used as a justification for not considering a contaminant above PRGs being taken into the risk assessment, it is more likely an artifact of a detection limit problem rather than due to a lack of presence of the contaminant at that site.**

Response: The Navy identified pentachlorophenol (PCP) as a risk driver and will advance it to the FS. The nature and extent of PCP contamination is described only briefly in text because PCP was detected in only two samples. PCP in groundwater will be identified as a data gap, and the Navy will modify the conclusions so that PCP is considered in the FS. Additional discussion of the nature and extent of PCP will not be included in the draft final RI report.

21. **Comment:** **<u>Page 5-18, Nature and Extent of Chemicals in Soil</u>: Why is arsenic considered a contaminant of interest when it is not detected above background? This statement is especially confusing given the number**

of times contaminants have shown up above background at this site and yet are not considered "contaminants of interest".

Response: Although arsenic concentrations are below background levels, the results of the risk assessment, determined that arsenic is a risk driver. It is the risk that makes a compound a contaminant of interest. See the Navy's response to Global General Comment No. 4 on page 7 for an explanation of why background compounds are not addressed in more detail in the nature and extent discussions.

As stated in Section 3 and shown on the flow chart presented on Figure 3-3, inorganic compounds were not excluded from the risk assessment based on background. The background evaluation is independent from the risk assessment, so it is possible for compound to be present above background but to not contribute significantly to risk. Conversely, it is possible for a compound (such as arsenic, which is widely known to be naturally present in California soil and groundwater) to be consistent with or below background concentrations and still pose a significant risk at Alameda Point.

22. **Comment:** **<u>Section 5.4, Nature and Extent of Chemicals in Soil and Groundwater, Page 5-18</u>: The text states that the presence of five PAH compounds detected in grab groundwater samples "is solely attributable to the sampling methodology used," but the presence of solvents and fuel constituents could have resulted in transport of PAHs into groundwater. Please include a discussion of PAHs in the nature and extent section.**

Response: The Navy will discuss the nature and extent of the five PAHs in the draft final RI report.

23. **Comment:** **<u>Section 5.4.1, Nature and Extent of Chemicals in Soil, Page 5-18</u>: The text states, "There are no chemicals of interest in soil at Site 9," but BaP was detected at a concentrations up to 1300 ug/kg, which is above the PRG of 62 ug/kg. BaP was found in 32 samples above the PRG. Other PAHs were also detected above PRGs. These chemicals should have been risk drivers at Site 9 and should be discussed in the nature and extent section.**

Response: See the response to Site 9 General Comment No. 2 on page 16

24. **Comment:** **<u>Section 5.4.2, Nature and Extent of Chemicals in Groundwater, 1,2-Dichloroethene (Total), Page 5-20</u>: The text states that the 1,2-DCE plume has been delineated, but the extent of contamination south and**

west of OWS-410A and OWS-410B has not been delineated. Please delete this statement and discuss how this data gap will be addressed.

Response: See the response to Site 9 General Comment No. 4 on page 18.

25. **Comment:** **<u>Page 5-21, first paragraph, third sentence</u>: Why are contaminants being screened against laboratory detection limits, especially when over 50% of the detection limits for napthalene have been set above the PRG?**

Response: The comment refers to the third sentence, which reads as follows: "Concentrations of naphthalene are below laboratory detection limits west of Building 410 (Table 5-7). The extent of naphthalene contamination in groundwater is defined (see Figure 5-14)."

Detection limits for the samples collected west of Building 410 were below the PRG in 17 of 20 samples shown on Figure 5-14. The three samples with elevated detection limits do not adversely affect the evaluation of the nature and extent of naphthalene.

No potential contaminants were screened against detection limits. Detection limits were used to determine if releases had occurred.

26. **Comment:** **<u>Section 5.4.2, Nature and Extent of Chemicals in Groundwater, Napthalene, Page 5-21</u>: The text indicates that the extent of napthalene contamination in groundwater is defined, but no samples have been collected in the vicinity of OWS-410A and OWS-410B. The location with the highest concentration of naphthalene (29,000 ug/L) is upgradient of the OWSs. It is possible that the contaminant plume extends to the south or southwest of these OWSs or that they were a separate source of naphthalene. Please delete the statement that the extent of naphthalene has been delineated and discuss how this data gap will be addressed.**

Response: See the response to Site 9 General Comment No. 4 on page 18.

27. **Comment:** **<u>Section 5.4.2, Nature and Extent of Chemicals in Groundwater, Page 5-21</u>: The section on ethylbenzene states that "low concentrations" of the chemical have been detected, but the maximum concentration detected is 150 ug/L, which is more than 50 times greater than the PRG (2.9 ug/L). Please explain why concentrations are considered low or delete this subjective qualifier from the text.**

Response: The concentrations were considered low because they are below the MCL. The Navy will delete the subjective modifier "low".

28. **Comment:** **<u>Section 5.4.2, Nature and Extent of Chemicals in Groundwater, Xylenes, Page 5-22</u>: The text indicates that the extent of xylenes in groundwater is limited to the area east and beneath Building 410, but no samples have been collected in the vicinity of OWS-410A and OWS-410B. The location with the highest concentration of xylenes (1,200 ug/L) is upgradient of the OWSs. It is possible that the contaminant plume extends to the south or southwest of these OWSs or that they were a separate source of xylenes. Also, it is unclear why Figure 5-16 shows a contaminant plume that appears to be migrating cross-gradient to the direction of groundwater flow. Specifically, the southern plume was drawn as though it extends northwest from SHP-S09-10, not west-southwest with groundwater flow. Please delete the statement that xylenes are limited to the area east and beneath Building 410, revise Figure 5-16 to indicate that the south and southwestern extent of the plume is unknown, and discuss in the text how this data gap will be addressed.**

Response: See the response to Site 9 General Comment No. 4 on page 18 for a discussion of the correct locations of the OWSs. The southern extent of the xylene plume is defined by MW410-3 and DHP-S09-03. The southwest portion of the plume is not bound by a sampling location, and the plume boundary line will be dashed to show that it is inferred. The text will not be revised because the data gap is limited and because the existing data support the statement about the location of xylenes in groundwater. This data gap can be closed during the design phase of the FS implementation.

29. **Comment:** **<u>Section 5.5, Fate and Transport, Page 5-22</u>: The discussion of 1,1-DCA degradation states that the compound will eventually transform into chloroethane, acetic acid, carbon dioxide, and water. This sentence is rather vague given the many factors that influence rates of degradation, the lack of discussion about these factors, and the use of the word "eventually" which provides little information regarding how long it will take for this transformation to occur. Please specify the half-life for 1,1-DCA degradation.**

Response: The presence of 1,1-dichloroethane (DCA) in groundwater is evidence that natural degradation is occurring at the site. The primary chemical used at Site 9 included 1,1,1-trichloroethane (TCA), which is an apparent degradation product of this compound. The Navy intends to evaluate remedial alternatives for the area that contains 1,1-DCA in groundwater in

the FS. Additional discussion of degradation rates will not be included in the draft final RI report.

30. **Comment:** **<u>Page 5-22, Fate and Transport Section</u>: EPA disagrees with the statements in this first paragraph. The concentrations, even of degradation products, should be higher in the source area and attenuate as the contamination moves downgradient. The fact that this is not the situation points to the contaminant source(s) not been adequately characterized and therefore the extent of contaminant is also inadequately portrayed.**

Response: Releases at Site 9 likely date back to 1958, when Building 410 was first used. A mass of contaminants is expected to migrate downgradient from a source over a period of 40 years. In addition, primary contaminants recorded to have been used within Building 410 in large quantities are not present in soil or groundwater. This finding suggests that primary contaminants have degraded. The source of groundwater contamination at Site 9 is activity conducted within Building 410. The method of release appears to be through former storm sewers below and east of the building. The paucity of soil contamination supports this conceptual site model (CSM), which is supported further by the absence of 1,1-DCA in shallow groundwater west of Building 410 (see Figure 5-9 of the RI report). No activities at EBS Parcel 154 (located west of Building 410 across Viking Street) contributed to soil or groundwater contamination. The distribution of 1,1-DCA in groundwater at EBS Parcel 154 supports this statement.

31. **Comment:** **<u>Page 5-23, second paragraph</u>: What natural attenuation processes have been documented that support the degradation of napthalene? Please provide this information.**

Response: No natural attenuation processes have been documented at Site 9; however, the lack of naphthalene downgradient of Building 410 suggests that groundwater is degrading as it moves with groundwater. The Navy agrees that these processes have not been demonstrated sufficiently to show that a particular remedial goal will be met; therefore, in the RI report, "attenuation" will be revised to "degradation." The intent of the RI report was to state that the degradation process is occurring. If monitored natural attenuation is considered as a remedial alternative, this process would be demonstrated in the FS, not the RI.

32. **Comment:** **<u>Section 5.5, Fate and Transport, Page 5-23</u>: The discussion about chlorinated hydrocarbons states that chemical oxidation will be used to reduce concentrations of chemicals or transform chemicals to less toxic compounds, and that any remaining residual concentrations will be addressed by natural attenuation. These statements are somewhat**

premature for the RI given the uncertainty regarding the outcome of the chemical oxidation process, the fact that the extent of contamination has not been delineated, and the fact that it is unclear whether chemicals will be sufficiently reduced as to allow for natural attenuation to address the remaining contamination. Please revise the text to rephrase these statements as predictions and not certainties.

Response: The extent of contamination has been delineated sufficiently to make remedial decisions at Site 9. The text will be revised to read as follows: "Under anaerobic conditions, PCE and TCE can degrade into 1,2-DCE and vinyl chloride."

33. **Comment:** **Page 5-25, Risks from Groundwater Section: What about dermal contact with groundwater for a construction worker? Where is DCE in this list?**

Response: The list on Page 5-25 shows that only four carcinogenic compounds pose risk greater than $1x10^{-6}$; therefore, only these compounds are presented on page 5-33 of the draft report.

34. **Comment:** **Section 5.6.2, Risks from Groundwater, Page 5-26: This section states that the EPC derived for lead in groundwater (5.8 ug/L) is significantly less than the EPA's treatment technique action limit for lead, but does not state the value of this action limit. Please include this value in the lead discussion.**

Response: The treatment technology action limit is 15 µg/L, and the text will be revised to read as follows: "The EPC derived for lead in groundwater was 5.8 µg/L, which is less than the EPA treatment technique action limit (15 ug/L) for lead (EPA 2003b)."

35. **Comment:** **Page 5-26, second paragraph: Background risk from arsenic in groundwater is 2.2×10^{-4} (see OU 1). Therefore the risk attributable to non-background levels of arsenic in groundwater would be 6.2×10^{-4}.**

Response: The background comparison determined that arsenic in groundwater is present at background levels, and arsenic is believed to be unrelated to site activities. The objective of presenting incremental risk is to present that portion of the site risk that is attributed to contamination from site activities. Because arsenic at Site 9 was determined to be present at background levels and not related to site activities, it is not appropriate to include risk from arsenic in the incremental risk. As stated in the NCP in 40 CFR, Volume 20, Part 300.400(b)(1), chemicals that are naturally

occurring in soil or groundwater generally are not cleaned up under CERCLA.

36. **Comment:** **<u>Section 5.7.4.2, Risk to Passerines, Page 5-29, and Section 5.7.4.3, Risk to Raptors, Page 5-30</u>: The first paragraph explains that a TRV for beryllium was not developed and therefore this chemical was evaluated qualitatively. However, there is no discussion of this evaluation either in Section 5.0 or in Section I.2.3.1.2. Please include a discussion of the qualitative evaluation for beryllium and a brief description of the criteria used to qualitatively evaluate a chemical in the methodology section of this report.**

Response: A discussion of the qualitative evaluation will be included in Appendix I of the draft final RI report.

37. **Comment:** **<u>Section 5.7.4.2, Risk to Passerines, Page 5-30 and Section 5.7.4.3, Risk to Raptors, Page 5-30</u>: The claim that the low concentrations of VOCs are quickly metabolized is unsupported by any information that explains why rapid metabolism would result in an apparent reduction of toxicity. No information is provided regarding whether metabolic rates of VOCs is dose-dependent. Further, it is not clear whether metabolism of VOCs will result in increased or decreased toxicity, or whether toxicity occurs only when concentrations are sufficient that typical metabolic pathways become saturated. In addition, if bioactivation is required for toxicity, then rapid metabolism may result in a relative increase in the dose of the toxic moiety relative to conditions that would exist if the compound were excreted unchanged. Unless sufficient information is provided here to support the claim that VOCs undergo rapid metabolism in mammals and birds, that residual VOC concentrations are consistent with levels conducive to a rapid metabolic rate of VOCs, and that rapid metabolism will increase rates of excretion and reduce toxicity, this statement should be deleted. Please delete the statements that VOCs are quickly metabolized so the risk posed to passerines and raptors is low. Please also make this change in each section in which it occurs (e.g., 6.7.4.2 and 6.7.4.3, etc.).**

Response: The following statement "VOC compounds in soils at Site 9 is not fully known, it is postulated to be low because mammals and birds quickly metabolize VOCs" will be deleted where it occurs throughout the document and throughout Appendix I.

38. **Comment:** **<u>Page 5-31, Nature and Extent of Chemicals Section</u>: Why do pages 5-16 and 5-17 not contain the information contained in the first and second paragraph of this section concerning inorganics and in**

particular arsenic? EPA strongly disagrees with the conclusions presented here regarding no significant releases of VOCs at this site. Please reconcile this claim with the fact that an in-situ chemical oxidation VOC removal action is currently ongoing at this site and the presence of VOCs in groundwater were discovered in significant concentrations as part of the delineation of the pilot study for this project.

Response: See the response to Global General Comment No. 4 on page 7 for an explanation of why inorganic compounds at background levels are not discussed in the conclusions portion of Section 9 of the RI report.

The Navy cannot find a statement in the RI report that indicates "no significant releases of VOCs at this site." The RI report recommends that the site be evaluated further during the FS.

39. Comment: **<u>Page 5-32, first paragraph</u>: An alternative explanation here is that the source of contamination has not yet been identified.**

Response: See the response to Site 9 Specific Comment No. 30 on page 29 if this comment refers to 1,1-DCA. If the comment refers to SVOCs, it is possible that PAHs are associated with fuel releases or the Bay Sediment unit (BSU). These compounds will be evaluated further during the FS.

40. Comment: **<u>Section 5.8.1, Nature and Extent of Chemicals, Page 5-32</u>: The link between the location of the maximum concentration of 1,1-DCA to the west of the building and the suggestion in the text that "residual contamination from historical releases is decreasing with time and distance from the source" is not clear. It is possible that the source of 1,1-DCA has not yet been found. In the text, please explain how the fact that the highest groundwater concentrations of 1,1-DCA are located west of Building 410 suggests that residual contamination from historical releases is decreasing with time and distance from the source.**

Response: See the response to Site 9 Specific Comment No. 30 on page 29.

41. Comment: **<u>Section 5.8.1, Nature and Extent of Chemicals, Page 5-32</u>: This section states that groundwater contamination plumes at Site 9 do not intersect the storm sewer main line that leads to Outfall J. Please explain the relevance of this fact given that the plumes do intersect the storm sewer lines east of Building 410, which are presumably connected to the storm sewer main line.**

Response: See the response to Global General Comment No. 1 on page 1.

Leaks in the former sewer lateral lines located east of Building 410 are the presumed release mechanism for VOCs into groundwater at Site 9. MW410-1 is used to monitor groundwater in the vicinity of the intersection of the sewer line that flows to outfall J and the former lateral lines. There is no indication of groundwater contamination in this area. In addition, results for samples S09-DGS-DP07 and S09-DGS-VE01 were used to evaluate groundwater conditions near catch basin 3-J. There was also no indication of groundwater contamination in this area. The relevance of this evaluation is that the storm sewer line that flows to outfall J is not acting as a preferential flow path for groundwater contamination, and that groundwater contamination at Site 9 is unlikely to impact Seaplane Lagoon.

42. **Comment:** **<u>Page 5-33, Table</u>: Where is DCE? The high concentration for this contaminant was 2400ug/l and the PRG is 61 ug/l.**

Response: Dichloroethene (DCE) at Site 9 poses a noncancer risk and is shown on the table on page 5-34.

43. **Comment:** **<u>Page 5-34, second paragraph</u>: What about DCE?**

Response: See the response to Site 9 Specific Comment No. 42 above.

44. **Comment:** **<u>Page 5-35, second paragraph</u>: Why is 1-2, DCE not considered a risk driver, especially in light of its frequent degradation to vinyl chloride?**

Response: The text states the following:

"The risk drivers for carcinogenic risk in groundwater are TCE and vinyl chloride; the risk drivers for noncarcinogenic risk are naphthalene, 2-methylnaphthalene, 4-methylphenol, <u>1,2-DCE</u>, and TCE. These compounds will be evaluated further in the FS."

The Navy has underlined "1,2-DCE" for ease of review.

45. **Comment:** **<u>Figure 5-8, Site 9, 1,1-Dichloroethane in Groundwater</u>: The 1000 ug/L contour line appears to be missing. Please draw a 1,000 ug/L contour line around wells P-9-MWI-09 and S09-DGS-DP02.**

Response: The figure will be revised as requested in the draft final RI report.

46. **Comment:** **<u>Figure 5-9, Site 9, 1,1-Dichloroethane Cross Section A-A'</u>: The legend does not define the meaning of the red and blue color coding. It appears that the red indicates contaminated areas and the blue indicates non-detects, but a concentration of 0.5 U is color coded red and is found within the red line. The significance of the red outline is also not defined in the legend but presumably indicates extent of contamination. Please include color coding definitions in the legend and re-evaluate the inclusion of a sample where the 1,1-DCA was not detected (0.5 U) within the red outline.**

Response: The figure legend will be revised to include descriptions for color coding. The sample from D09-01 will be color-coded blue, and the nondetect (ND) line will be adjusted accordingly.

47. **Comment:** **<u>Figure 5-10, Site 9, 1,2-Dichloroethene in Groundwater</u>: The 1000 ug/L contour line appears to be missing and the "ND" contour line excludes some wells where 1,2-DCE was detected. Please include a 1,000 ug/L contour line around SHP-S09-10. Also, please redraw the contours so that wells with hits (P-9-MWI-09 and P-9-MWI-05) are not outside of the ND contour line.**

Response: The figure will be revised as requested in the draft final RI report.

48. **Comment:** **<u>Figure 5-11, Site 9, 1,2-DCE Cross Section A-A'</u>: The legend does not include definitions for the red and blue color coding. Please include color coding definitions in the legend. Also, it appears that the red line that defines the extent of contamination (which should also be defined in the legend) should be queried to the right of SHP-S09-08.**

Response: See the response to Site 9 Specific Comment No. 46 above.

49. **Comment:** **<u>Figure 5-13, Site 9, Vinyl Chloride Cross Section A-A'</u>: The legend does not include definitions for the red and blue color coding. Please include color coding definitions in the legend. Also, it is unclear why in some instances the red line that defines extent of contamination (which should also be defined in the legend) is dramatically contorted to only include "hits" (such as near wells S09-DGS-DP05 and S09-DGS-DP04) buts in other locations, a non-detect sample is included within the red line presumable in order to avoid such contortion (at well DHP-S09-02). Please be consistent when delineating contamination on the cross section figures.**

Response: See the response to Site 9 Specific Comment No. 46 on page 34.

50. **Comment:** **<u>Figure 5-14, Site 9 Naphthalene in Groundwater</u>: The 10,000ug/L contour line is missing. Please include a 10,000 ug/L contour line around well SHP-S09-10.**

Response: Based on the small size of the 10,000-µg/L plume, this plume line will not be added.

SITE 13 GENERAL COMMENTS

1. **Comment:** **Many of the sampling locations mentioned in the text of the Section 6.2 subsections are not shown on Figure 6-4, and it is important to know where these samples are located in order to understand the scope of previous investigations and the nature and extent of contamination. A cursory comparison of the text with Figure 6-4 revealed that some of these omissions appear to include:**

   - **B-1 through B-3 and B-7 (HLA Soil and Groundwater Investigation, 1989)**
   - **CPT-S13-02 through CPT-S13 (Follow-On Investigation 1994)**
   - **Vacuum Excavation Locations or samples S13-DGS-VE-xx (Supplemental Data Gap Sampling, 2001).**
     -Monitoring Well M07C-07
     -Test Pit Sample locations

   There may be other locations that are not shown. It is possible that inclusion of every sample location would make this figure unreadable; if this occurs, then ideally, a D or E size plate should be provided, or if this is not possible, then several figures should be provided. Please include every sampling location on one or more figures or plates.

   Response: Figures that present sampling locations for each analytical group will be included in the draft final RI report.

2. **Comment:** **It appears that contaminant concentrations associated with some of the tarry refinery waste (TRW) were not included in the risk assessment. For example, benzene was detected at 31,000 ug/kg, but the maximum concentration used for the human health risk assessment was 1,000 ug/kg. Since TRW is present in the subsurface beneath a large portion of the site, this appears to be inappropriate and would result in an underestimation of the risk associated with this site. Please include contaminant concentrations associated with the TRW in the risk assessments.**

Response: Some data collected from the tarry refinery waste (TRW) were excluded from the risk assessments, which resulted in underestimation of risk. However, the ultimate conclusion of the RI report is that the TRW should be evaluated during the FS; therefore, inclusion of TRW data will not change the conclusions of the RI report.

3. **Comment:** **The extent of contamination has not been adequately delineated. When the extent of contamination is not adequately delineated, the scope and cost of remedial actions in the FS cannot be determined with sufficient accuracy. The following is a list of some obvious data gaps:**

Benzene (soil): South of EX13–004
Lead (soil): West and northwest of BOR-16.
TPH (groundwater): Northeast of CA13-01; North and northeast of B-IMF-09; West of CA13-04, and southwest of CA13-14 and CA13-25.
Benzene (groundwater): Northeast of B13-30; West of CA13-25.

Please discuss how these data gaps will be addressed.

Response: The Navy concedes that data gaps exist at Site 13, especially in regard to the TRW; however, the evaluation of the boring logs provides a conservative estimate of the extent of the TRW and associated contamination in soil. The Navy believes these data gaps are best addressed during the implementation phase of the FS.

4. **Comment:** **The extent of pentachlorophenol (PCP) and dioxins have not been determined. PCP was detected in soil at concentrations up to 1,000 ug/kg, but detection limits were elevated to as much as 170,000 ug/kg. Similarly, in groundwater, PCP was detected at concentrations up to 7 ug/L, but detection limits between 25 and 250 ug/L have been common. As a result, the extent of PCP contamination is unknown. Also, dioxins are commonly associated with PCP, but only one soil sample was analyzed for dioxins. Please discuss how these data gaps will be addressed.**

Response: The RI approach at OU-2A included an investigation of releases and the iterative investigation process allowed for the refinement of the process. PCP and dioxins were not identified as risk drivers in soil. See the response to Global General Comment No. 2 on page 3 for an explanation of why these compounds were not evaluated in the nature and extent section.

In 62 of 72 groundwater samples analyzed for PCP, the CLP laboratory analyzed the samples to the practical quantitation limit (PQL) of 25 µg/L.

Six samples had detection levels greater than the PQL. Two samples collected from MWOR-3 contained PCP at 0.6 and 7 µg/L. The extent of PCP in groundwater has been delineated to 25 µg/L. In addition, pentachlorophenol was used primarily as a insecticide, herbicide, algicide, fungicide, and molluscicide. Non-wood uses account for no more than 2 percent of current consumption.

5. **Comment:** **Many of the figures include red and green color coding for sampling locations, where red indicates detections, but this convention was not used consistently. For example, it appears that the symbols for wells M13-09 and M07C-09 on Figure 6-15 should be changed from red to green, since results posted next to the wells are 0.5 U. This convention does not appear to have been used for Figure 6-14 at all. Please use the same color convention on each figure.**

Response: The figures cited in the example present data from the most recent groundwater monitoring event. Samples from wells M13-09 and M07C-09 contained trichloroethene (TCE) detected during previous monitoring events. This situation will be explained in the legends of the figures and in the text of the draft final RI report.

SITE 13 SPECIFIC COMMENTS

1. **Comment:** **<u>Section 6.1.1, Site 13 Physical Features, Page 6-1</u>: Former Buildings 298 and 401 are mentioned in this section but are not included on Figure 6-1 (Site Features). Please add these former buildings to the figure.**

Response: The figures will be revised to show the approximate locations of the buildings.

2. **Comment:** **<u>Section 6.1.2, Site History, Page 6-3</u>: The text states that the industrial waste treatment sewer lines were plugged in 1989, but does not discuss how wastewaters were disposed of thereafter. Please discuss in the text how wastewaters were disposed after the lines were plugged.**

Response: Wastewater was discharged to sanitary sewers operated by the East Bay Municipal Utilities Department. Exact details on the new sewer lines will not be included in the draft final RI report. The draft final RI report will be revised to include this statement.

3. **Comment:** **<u>Page 6-3, first paragraph</u>: What was Building 285 used for?**

Response: Base history for these buildings is incomplete. Buildings in a similar configuration were observed in the 1937 aerial photographs of the site.

4. **Comment:** **<u>Page 6-3, fourth paragraph</u>: Were any samples taken in the soil beneath the OWSs?**

Response: Soil samples from borings 210IW-001, 210-IW-003, and CA13-26 from 3 to 7 feet bgs were analyzed for metals (see Figure 6-12 of the RI report), and groundwater samples MWOR-1, MW-1, CA13-02, CA13-14, CA13-15, and S13-DGS-VE01 were analyzed for VOCs (see Figure 6-14 of the RI report). These samples were collected in the near vicinity of the OWSs and did not indicate evidence of CERCLA releases. This area has been evaluated for CERCLA contaminants, and remedial activity for the TPH release is ongoing.

5. **Comment:** **<u>Page 6-5, Section 6.1.3.2</u>: OWSs 397A through 397 D need further investigation.**

Response: See the response to Site 13 Specific Comment No. 4 above.

6. **Comment:** **<u>Section 6.2.1, Phases I, II, and III, 1991</u>: Page 6-7: The text describes borings and monitoring wells with the designation "IMP" (e.g., B-IMP-01, M-IMP-01) but Figure 6-5 does not include any locations with an "IMP" designation. Figure 6-4 does include locations with an "IMF" designation, but it is unclear if these are the same locations or if the discussion of the locations with the "IMF" designation was omitted from the text. Please resolve this discrepancy.**

Response: The text will be revised to change the acronyms "IMP" to "IMF" to accurately describe the sample identification numbers.

7. **Comment:** **<u>Page 6-7, third paragraph</u>: What were the results of the Phase III investigation?**

Response: The draft final RI report will include tabulated data of the results of each phase of investigation and a discussion of the investigation conclusions.

8. **Comment:** **<u>Page 6-9, last sentence</u>: It is not acceptable to have the laboratory not send data and thus leave a data gap.**

Response: The Navy agrees with this comment and identifies the issue in the draft RI report. No additional information is available for inclusion in the draft final RI report, which therefore will not be revised.

9. **Comment:** **<u>Section 6.2.2, Investigations Conducted Under the Installation Restoration Program, Page 6-10</u>: The table of damaged storm sewer line segments indicates that the line from 6J-1 to 6J-F is low priority, but Figure 6-3 shows this line as high priority. Please resolve this discrepancy. Also, it is unclear if repairs will be conducted. Please discuss whether the segments of pipe with a high or low priority for repair are scheduled for repair.**

Response: The table will be revised to show that the line from 6J-1 to 6J-F is high priority for repair.

The RI report discusses work completed on sewer lines and will not be revised to speculate on future work to be completed on sewer lines.

10. **Comment:** **<u>Section 6.2.2, Investigations Conducted Under the Installation Restoration Program, Page 6-11</u>: The rationale for the omission of SVOC analysis during the 2002 and 2003 Basewide Groundwater Monitoring investigation was not presented. SVOCs are a significant issue at this site and the presence of fuels can transport PAHs in groundwater. Please explain why SVOCs were not analyzed.**

Response: The empirical data do not support this comment. Groundwater samples have been analyzed for SVOCs 60 to 84 times at Site 13 (depending on the specific analyte). The data show that SVOCs are not present in groundwater. In all, 84 samples were analyzed for BaP, and detection levels for 83 of the 84 samples were 10 µg/L or less. Of these 83 samples, 27 had detection levels of 2.7 µg/L or less. These data suggest that SVOCs are not a significant issue in groundwater at Site 13; therefore, SVOCs were not included in the groundwater monitoring program.

11. **Comment:** **<u>Section 6.2.2, Investigations Conducted Under the Installation Restoration Program, Page 6-12</u>: The discussion about PAH compounds does not mention Test Pits 1-6. Table 6-6 indicates that four of seven samples exceeded the BaP equivalent action level of 1 mg/kg. In the text, please discuss these Test Pit samples and include them on Figure 6-4.**

Response: These test pit samples were not collected as part of the PAH sampling discussed on Page 6-12 of the draft RI report. These samples were discussed under Section 6.2.6, Treatability Studies, under "Terrain Conductivity Mapping" on page 6-17 of the draft report. Table 6-6 (Table 6-21 in the draft final report) will be revised to show that the samples were collected from Trenches 1 through 6 as shown on Figure 6-4.

12. **Comment:** **<u>Page 6-12, Section 6.2.3, Phase 2A paragraph</u>: Please describe where this former incinerator was located and which building it occupied.**

Response: No waste from the incinerator was detected at Site 13. The incinerator was ultimately determined to be located on CERCLA Site 7.

13. **Comment:** **<u>Page 6-13, first paragraph</u>: What plans have been made to address the floating product in manhole 5J-2?**

Response: The TPH removal action is described on pages 6-5, 6-6, and 6-15 of the RI report as discussed in the response to Site 13 Specific Comment 17 below.

14. **Comment:** **<u>Page 6-13, third paragraph</u>: Not sampling the OWSs for VOC and metals appears an oversight and a data gap.**

Response: See the response to Site 13 Specific Comment No. 4 on page 38.

15. **Comment:** **<u>Section 6.2.5, Removal Actions, Page 6-14</u>: According to the paragraph describing the 1993 Lead Removal, the one soil confirmation sample that exceeded the interim cleanup goal of 1,000 mg/kg had a lead concentration of 121 mg/kg. This is inconsistent or a typographic error. Please explain how a concentration of 121 mg/kg is considered to exceed the cleanup goal of 1,000 mg/kg, or, if this is a typographic error, please correct the error.**

Response: The text will be revised to indicate that the interim cleanup level was 100 mg/kg.

16. **Comment:** **<u>Page 6-15, fourth paragraph, last sentence</u>: What was the reason for suspending the DVE removal activities?**

Response: The recovery of TPH had reached an asymptotic rate. The system was shut down to determine if floating TPH would reappear.

17. **Comment:** **<u>Page 6-16, first paragraph</u>: Has the presence of petroleum products near the east end of Building 397 since been confirmed or refuted? If not, why not?**

Response: TPH was detected near the east end of Building 397. The release of TPH is documented in Section 6.1.2. The TPH removal action is described on pages 6-5, 6-6, and 6-15 of the RI report.

The text referred to in the comment discusses the results of a pilot test to evaluate the efficacy of SCAPS technology. The pilot test did not show a strong correlation between the technology and site conditions near the east end of Building 397

18. Comment: **<u>Section 6.3.1, Potential Sources, Page 6-18</u>: The fact that OWSs 397A, 397B, and 397C were filled with petroleum during the release of jet fuel indicates that jet fuel could have leaked from any cracks in the OWSs. The condition of the OWSs before they were filled with concrete is not discussed in the text, but the conclusion is made that "they are no longer considered a source of CERCLA contamination." Samples have not been collected from the soil beneath the OWSs; this appears to be a data gap. Please discuss the condition of the OWSs before they were filled with concrete, and if the condition is unknown, sampling may be necessary to demonstrate that jet fuel was not released into soil in the vicinity of the OWSs. Also, the text in this section states that the spill at Building 397 resulted in the release of 4,000 to 17,000 gallons of JP-5. This spill is referred to several times in Section 6, and every other time it is mentioned, the text states that 3,500-17,000 gallons of JP-5 were released. Please be consistent when discussing the amount of JP-5 spilled at Building 397.**

Response: The Site 13 history section discusses the Navy's response to the fuel release as follows: "Immediate cleanup involved pumping floating free product from the OWS, manholes, and storm water lines that contained free product. The EBS conducted by IT in 2001 concluded that jet fuel contamination at this site would be addressed as part of the basewide TPH strategy."

Additional remediation activity took place in 1993 (see page 6-14), when remedial excavations for TPH were completed and OWS 397D was removed. Because of the proximity of OWSs to the building, the Navy filled OWSs 397-A through C with concrete slurry. The Navy knows that TPH was released to soil and groundwater during the 1991 release. The OWSs are now filled with concrete, and the statement that they are no longer considered a source of CERCLA contamination is correct.

The dual vacuum extraction (DVE) system was installed to remove floating petroleum from the vicinity of these three OWSs. Recent data have not been collected to evaluate conditions around the OWSs.

The Navy will revise the text regarding the spill at Building 397 to indicate that the JP-5 release was 3,500 to 17,000 gallons.

19. **Comment:** **<u>Page 6-18, Section 6.3.1, second, fourth and fifth bullets</u>: VOCs and metals were not sampled for in either soil or groundwater at these OWSs and so the statement cannot be made that no CERCLA substances are present at these locations.**

Response: Soil samples from borings 210IW-001, 210-IW-003, and CA13-26 were analyzed for metals (see Figure 6-12), and groundwater samples MWOR-1, MW-1, CA13-02, CA13-14, CA13-15, and S13-DGS-VE01 were analyzed for VOCs (see Figure 6-14). These samples were collected from near the OWSs (see Figure 6-3) and did not indicate evidence of CERCLA releases. This area has been evaluated for CERCLA contaminants, and remedial activity for the TPH release is ongoing. The text will indicate that there is no evidence that CERCLA substances are present at these locations, and the OWS are a potential source of Petroleum contamination.

20. **Comment:** **<u>Section 6.3.1, Potential Sources, Page 6-18</u>: The groundwater flow at OU-2A is generally westward so it is unclear why the text suggests that aboveground storage tanks (ASTs) were the source of free petroleum hydrocarbon product that was found east of the ASTS. Please explain how the free petroleum hydrocarbon product found in soil and groundwater east of former ASTs 324-328 would have arrived at their current location if the ASTs were the source.**

Response: The operational histories of these aboveground storage tanks (AST) are not known. A large-quantity release could have flowed east on the surface and then infiltrated soil and groundwater. Such a release would account for the presence of TPH-saturated soil at 1 to 2 feet bgs (see the response to Site 13 Specific Comment No. 34 which discusses the high TPH concentrations in shallow soil); however, it also is possible that former refinery activity is the source of this TPH.

21. **Comment:** **<u>Page 6-19, bulleted items</u>: Where does the incinerator fit in as a potential source of contamination (see page 6-12, Section 6.2.3)**

Response: Some investigation was conducted at Site 13, but the incinerator was ultimately determined to be located on CERCLA Site 7. **This will be clarified in the draft final report.**

22. **Comment:** **<u>Section 6.3.2.1, Soil, Page 6-21</u>: It is unclear why the table in this section entitled "Soil Analytical Results for Chemicals Used at Site 13" does not include every chemical that exceeded PRGs, especially since some building uses are unknown so it is impossible to know with certainty what chemicals were used at the site. For example, crude petroleum contains metals, so metals should not be excluded from the table, but arsenic, chromium, and vanadium were**

not included. Please include all compounds that were detected above PRGs at the site in this table.

Response: The purpose of this table is not to conduct a PRG screening (as the footnote of the table notes) but rather to show that compounds known to have been used at the site were evaluated. The text regarding crude oil is correct, but the Navy has recommended the refinery waste for further evaluation under the FS.

23. **Comment:** **<u>Page 6-21, Table</u>: Building 397 used VOCs for aircraft overhaul. Page 6-3 states "In 1958, Building 397 was constructed. From its inception until 1997, it served as an aircraft overhaul plant services facility. Materials stored in Building 397 included petroleum products as well *as halogenated and nonhalogenated solvents* and aircraft fuel. Several additional features associated with Building 397 operations, including floor drains that discharge to OWSs, fuel lines and a GAP are further discussed..." (Bold italics are added for emphasis). It is very probable that solvents used in the aircraft overhaul were discharged to the floor drains and into the OWSs which in turn contaminated the soil and groundwater. However, no metals or VOCs have been sampled for in the soil or groundwater in these locations, so it is not possible to make a detemination about the presence or lack thereof of these constituents.**

Response: See the response to Site 13 Specific Comment 19 on page 42.

24. **Comment:** **<u>Section 6.3.2.2, Groundwater, Page 6-22</u>: It is unclear why the table "Groundwater Analytical Results for Chemicals Used at Site 13" does not include every chemical that exceeded PRGs. Some site uses are unknown so it is impossible to know with certainty what chemicals were used at the site or are associated with other compounds that were used at the site. For example, crude petroleum contains metals and petroleum hydrocarbons are known to mobilize metals in the environment, so metals should not be excluded from the table, but aluminum, antimony, arsenic, iron, manganese, nickel, thallium and vanadium were not included. Arsenic was found at a concentration that is more than 3 orders of magnitude above the PRGs. Please include all compounds that were detected above PRGs in site groundwater in this table.**

Response: See the response to Site 13 Specific Comment 22 on page 43.

25. **Comment:** **<u>Page 6-22, Groundwater Table</u>: The full suite of VOCs have not been analyzed.**

Response: This comment misinterprets the purpose of the table. See the response to Site 13 Specific Comment 22 on page 43.

26. **Comment:** **<u>Section 6.3.2.3, Soil Gas, Page 6-23</u>: The section on soil gas data is very brief and does include a discussion of the results from the single soil gas sample collected. Please explain why one soil gas sample was considered sufficient to characterize soil gas and describe the results of this sample.**

Response: See the response to Site 9 Specific Comment 12 on page 22.

27. **Comment:** **<u>Page 6-23, Secton 6.3.3, first paragraph</u>: The logic used in this paragraph to account for VOCs found in groundwater is faulty. It is stated on Page 6-10 that the sewer lines are mostly submerged which would make infiltration out of the storm sewers into Site 13 from Site 4 unlikely. In addition, the fact that VOCs were used for aircraft overhaul in Building 397, and are thus the likely source of contamination via the OWSs, has been overlooked.**

Response: The OWSs were evaluated and ruled out as potential sources of CERCLA contaminants (see the response to Site 13 Specific Comment 19 on page 42). The EPA's statement regarding the likelihood of water movement out of the storm sewers is not disputed; however, such movement is possible under high-flow conditions in which water could be forced out the storm sewer and into the groundwater.

28. **Comment:** **<u>Section 6.3.3, Site-Specific Conceptual Model, Page 6-23</u>: The site conceptual model does not take into account the fact that crude oil and refinery waste contain metals or that petroleum hydrocarbons can mobilize metals in the environment. Please revise the site conceptual model to include metals and the mobilization of metals by petroleum hydrocarbons.**

Response: The site data do not support this statement. In general, metals are not present at higher concentrations at Site 13 than at surrounding OU-2A sites that do not contain TRW. The presence of petroleum in groundwater affects the reduction-oxidation potential, which could transform some metals to a dissolved state.

Lead has been detected in groundwater at concentrations greater than 15 μg/L, the MCL, in 6 out of 104 samples. The sampling locations for these samples were all coincident with the TRW, but other sampling locations bound these few locations and show that metals are not being mobilized into groundwater. The highest groundwater lead concentration of 1,770

µg/L was detected in a sample collected from B-IMF-09. Lead in groundwater around this high concentration has been characterized but not fully bound. A groundwater sample from M-IMF-01 approximately 30 feet southwest (immediately downgradient of) B-IMF-09 contained 1.5 µg/L lead. A sample from M13-06 approximately 80 feet west of B-IMF-09 contained less than 0.23 µg/L lead. Based on the data for Site 13, the limits of lead in groundwater have been defined and significant mobilization of lead is not occurring.

29. **Comment:** **Section 6.3.4, Background Evaluations, Page 6-24: This section lists chemicals that exceed background concentrations but are not included in the nature and extent section because they "do not pose a risk at this site." The nature and extent section should be independent of the risk assessment. All chemicals that exceed background concentrations should be included in the nature and extent section.**

Response: See the response to Global General Comment No. 4 on page 7.

30. **Comment:** **Section 6.3.4, Background Evaluations, Page 6-24: The text indicates that arsenic concentrations were determined to be background even though arsenic concentrations in soil at Site 13 were detected more frequently than in background. Since arsenic was detected more frequently at the site than in background, it should be included in the nature and extent section. A similar line of reasoning applies to manganese and elevated concentrations at Site 13. Even though these elevated concentrations may be due to reducing conditions, manganese concentrations exceed background concentrations and should therefore be included in the nature and extent section. In addition, arsenic was detected in groundwater at a concentration that is more than 3 orders of magnitude above the PRG, but it is not considered in this section. Please include all metals that were detected above background or PRGs in the discussion of the nature and extent of contamination.**

Response: Please see the response to Site 9 Specific Comment No. 17 on page 24 concerning the limitations and caveats associated with comparing detection frequencies using the test of proportions. For Site 13 soil, the detection frequency for arsenic in the background data set was too low to support a comparison of the median concentrations using the Wilcoxon rank sum (WRS) test; however, detected data were sufficient to compare the right-hand tails using the quantile test, and the results of this comparison clearly showed that site concentrations were below ambient levels (that is, only three out of the highest five concentrations in the pooled site and background data set came from the site). In order for site

concentrations to be statistically higher than background at the 5 percent level of significance, all five of the largest measurements would have to come from the site population. Examination of outlier box plots and quantile tables also showed that the maximum detected concentration in the background data set (23 mg/kg) exceeded the maximum detected concentration in the site data set (20 mg/kg). Detected data were sufficient to compare median concentrations of manganese in soil, and the results of this comparison showed that site concentrations were statistically below background. The maximum detected concentration of manganese in the background data set (1,060 mg/kg) was also considerably higher than the maximum detected concentration at the site (702 mg/kg).

No statistical comparison could be made for arsenic concentrations in groundwater because of the low frequencies of detection and the fact that the maximum concentrations from both the site and background populations were nondetect. Arsenic was also detected more frequently in the background data set than in the site data set (54 percent versus 49 percent). Outlier box plots and quantile tables were also used to further compare the data qualitatively. The maximum detected concentration of arsenic at the site (0.096 milligrams per liter [mg/L]) was roughly double that measured in the background data set (0.041 mg/L); however, this represents a single outlier out of 77 measurements. The distribution of the remainder of the site data is comparable to that shown for the background population.

31. **Comment:** **<u>Page 6-24, second and fifth paragraph</u>: Please explain this paragraph: Are all the metals listed here below PRGs? Is that why they are not considered a risk even though they exceed background?**

Response: The HHRA results are independent of the background evaluations. As stated in Section 3 of the RI report and shown on the flow chart on Figure 3-3, inorganic compounds were not excluded from the risk assessments based on background. The background evaluation is independent from the risk assessment, so it is possible for a compound to be present above background levels but not contribute significantly to risk. Conversely, it is possible for a compound (such as arsenic, which is widely known to be naturally present in California soil and groundwater) to be present at or below background concentrations and still pose a significant risk at Alameda Point. See the response to Global General Comment No. 4 on page 7.

32. **Comment:** **<u>Section 6.4, Nature and Extent of Chemicals in Soil and Groundwater, Page 6-25</u>: This section states that chemicals that do not pose a risk to human health or the environment are not discussed in this section**

unless they relate to past site activities. Inclusion in the nature and extent section should be independent of the risk assessment, and there is a degree of uncertainty regarding what chemicals were used at the site in the past. Therefore, any chemical that exceeds PRGs or background concentrations should be included in the nature and extent discussion. Figures showing the extent of metals contamination in soil and groundwater should also be provided. Please revise the text to discuss the extent of contamination of any compound that exceeds PRGs or background and provide figures to show the extent of contamination.

Response: See the response to Global General Comment No. 4 on page 7.

33. **Comment:** **<u>Page 6-25, Section 6.4</u>: EPA disagrees with the conclusion presented in this paragraph. See specific comment #23.**

Response: See the response to Site 13 Specific Comment No. 19 on page 42.

34. **Comment:** **<u>Section 6.4.1, Nature and Extent of Chemicals in Soil, Page 6-26</u>: The sample depths for B13-30 and B13-31 were omitted from the text. Please include sample depths for B13-30 and B13-31 in the discussion regarding sampling locations that exceeded the floating product screening level.**

Response: The text will be revised to read as follows: "The sampling locations that exceeded the floating product screening level in 1994 include B13-29 (1 to 1.5 feet bgs), B13-29 (2.5 to 3.5 feet bgs), B13-30 (1-2 feet bgs), and B13-31(1-2 feet bgs)."

35. **Comment:** **<u>Section 6.4.1, Nature and Extent of Chemicals in Soil, Page 6-26</u>: Please include discussions of the vertical extent of contamination in the sections describing benzene, lead, and BaP equivalent contamination.**

Response: The following brief discussion of the vertical extent of contamination is included in the section describing the TRW:

"Upon review of the test pit data and boring logs, the TRW is located along the former shoreline at Site 13 (Figure 6-7), ranging in depth from just below ground surface to approximately 8 feet bgs."

The text for each of the compounds states that the compound was detected *within the TRW.* The Navy will revise the text to include the depths at which the TRW was observed.

36. **Comment:** **<u>Section 6.4.2, Nature and Extent of Chemicals in Groundwater, Page 6-27</u>: The section discussing waste from the former oil refinery notes that the northern side of the free product plume is not well defined. Further sampling should be done to define the northern side of the plume.**

Response: The Navy agrees with the comment but believes that this sampling should be conducted during design data collection during FS implementation.

37. **Comment:** **<u>Page 6-28, first paragraph</u>: The sporadic detections of TCE are not discussed as stated here. Please include in the discussion the fact that 116 out of 121 samples had a detection limit that exceeded the PRG.**

Response: TCE is discussed in detail on page 6-31. Text regarding elevated detection limits will be included in the draft final RI report. Achieving detection limits below the PRGs for TCE and vinyl chloride is not possible on a routine basis, especially for environmental samples that might include matrix interferences. The samples were analyzed using EPA methods with detection limits that are as low as technically feasible in routine laboratories. The samples collected at Site 13 were analyzed by CLP laboratories to detection levels outlined by EPA protocol. Of the 121 samples analyzed for TCE, 97 had detection levels for of 1 µg/L or lower. An additional 12 samples had detection limits of 2 µg/L. Only four samples had detection limits of greater than 10 µg/L.

38. **Comment:** **<u>Section 6.4.2, Nature and Extent of Chemicals in Groundwater, Page 6-28</u>: Values much larger than the PRGs are used to define the extent of plumes for benzene and ethylbenzene. For example, samples on the north, east, and west side of the benzene plume contained concentrations of less than 26 ug/L, which is used as evidence that the plume has been defined even though the PRG is 0.34 (ug/L). Please explain how a concentration significantly greater than the PRG is sufficient to define the plume and why additional sampling to define the plume with greater precision is not necessary or discuss how the apparent data gap will be addressed..**

Response: The area of elevated benzene and ethylbenzene concentrations in groundwater is within the TRW area recommended for further evaluation during the FS. The delineation lines are dashed to demonstrate that they are inferred. The nondetect line has been moved out to allow for a conservative estimate of size. Additional data can be collected when the remedial activity to address the issue is designed.

39. **Comment:** **<u>Section 6.4.2, Nature and Extent of Chemicals in Groundwater, Page 6-29</u>: The vertical extent of contamination is not discussed. Please**

include a discussion of the vertical extent of benzene, ethylbenzene, xylenes, naphthalenes, TCE, and pentachlorophenol (PCP) contamination.

Response: The vertical extent of the petroleum hydrocarbon compounds (benzene, ethylbenzene, xylenes, and naphthalene) appears to be limited to shallow groundwater, but there are limited data to define the vertical extent of these compounds. The vertical extent of TCE will not be discussed because the few detected sample results are not enough to constitute a plume. These data gaps can be assessed during the FS design data collection phase.

40. **Comment:** **Page 6-29, 6-30: It is possible that the benzene and ethylbenzene has moved downgradient from monitoring well MW-1.**

Response See the response to Site 13 Specific Comment No. 18 on page 41 for a discussion of remedial activity in the area of MW-1.

41. **Comment:** **Section 6.4.2, Nature and Extent of Chemicals in Groundwater, Pages 6-29 and 6-30: According to this section, limited groundwater data are present in the area near ASTs 324-328, so it is unknown whether benzene and ethylbenzene in groundwater from the TRW and from potential releases at ASTs 324-328 are commingled. Additional sampling should be performed to determine whether commingling occurs in the vicinity of the ASTs and to gather more information regarding groundwater contamination near ASTs 324-328. Please discus how this data gap will be addressed.**

Response: This data gap can be addressed during the design data collection phase of the FS.

42. **Comment:** **Page 6-31, first paragraph: It is documented that halogenated and nonhalogenated solvents were stored in Building 397 and were likely used for aricraft overhaul. See comment on page 6-21. In addition, please note that MWOR-02, where the TCE contamination has been detected, is downgradient of the OWSs.**

Response: See the response to Site 13 Specific Comment No. 19, which discusses the evaluation of groundwater near the OWSs.

43. **Comment:** **Section 6.4.2, Nature and Extent of Chemicals in Groundwater, Page 6-31: Since the analytical detection limits for at the site have been 25 ug/L or higher in the latest sampling events and the extent of PCP contamination can therefore not be determined, additional sampling**

should be performed in order to determine the extent of PCP contamination at Site 13. Please discuss how this data gap will be addressed.

Response: See the responses to Site 9 Specific Comment No. 20 and Site 13 General Comment No. 4.

44. **Comment:** **<u>Section 6.5, Fate and Transport, Page 6-31</u>: This section states that the discussion of fate and transport includes 1,2-DCA in groundwater, but this discussion is missing. Please revise this section so that it includes a discussion of the fate and transport of 1,2-DCA in groundwater.**

Response: The compound 1,2-DCA was included erroneously. This compound will be deleted from the list of compounds discussed in the fate and transport section of the draft final RI report.

45. **Comment:** **<u>Section 6.5, Fate and Transport, Page 6-32</u>: The TRW discussion does not seem to be complete. The potential mobility of the TRW material is discussed, but the actual transport of the chemicals in groundwater after mobilizing reactions have occurred is unclear. Also, if the fact that limited data is available (as mentioned in this section) is hampering the discussion of fate and transport, additional data should be collected to gain a more complete understanding of these processes. Please include more detail about the migration of TRW in groundwater.**

Response: The Navy agrees that data gaps exist with the TRW; however, the limited data at the site do not suggest that inorganic chemicals are mobilizing in groundwater (see the response to Site 13 Specific Comment No. 28 on page 44). Benzene, ethylbenzene, and xylene are likely present in groundwater in the southeast portion of Site 13 because TRW in the area intersects groundwater.

46. **Comment:** **<u>Section 6.5, Fate and Transport, Page 6-32</u>: The discussion of TRW and its effect on TPH, benzene, ethylbenzene, and xylene does not take into account the fact that VOCs can desorb from the TRW as well as be sorbed by it. The TRW is a petroleum process residual that contains VOCs, so it can be a source of benzene, ethylbenzene and xylene to groundwater. In addition, the TRW does not have a similar composition to diesel fuel, motor oil and gasoline; TRW consists primarily of high molecular weight hydrocarbons with residual VOCs. Its consistency is similar to that of asphalt so it is not that similar to liquid petroleum. Please revise the TRW; Lead in Soil; and Benzene, Ethylbenzene, and Xylene sections to include a more**

accurate description of the consistency and composition of TRW and the fact that it may also be a source of benzene, ethylbenzene, and xylene to groundwater.

Response: TRW is present in many forms at Site 13, both the asphaltic form in the test pits and as floating product in the southeastern portion of Site 13. The lead in soil section will be revised to discuss the consistency of the TRW where lead was detected. The draft final RI report will be revised to include this information and identify the TRW as a potential source of benzene, ethylbenzene, and xylene contamination of groundwater.

47. **Comment:** **<u>Page 6-33, paragraph on TCE</u>: Only 5 samples for TCE had low detection limits. TCE may be present at lower or higher concentrations at other locations, but the detection limits may be too high to yield a detect result. See Table 6-4.**

Response: Although this comment is correct, there is no indication or evidence of any release of TCE at the site. Of the 121 samples analyzed for TCE, 97 had detection values of 1 µg/L or less, and 13 more had detection values of 2 µg/L. Only 5 of the 121 samples had detection values of 10 µg/L or greater. The site has been evaluated properly for TCE, and the data suggest that there is no evidence of a significant release of TCE at Site 13.

48. **Comment:** **<u>Section 6.5, Fate and Transport, Page 6-33</u>: Natural attenuation of TCE is discussed, but no evidence of natural attenuation of TCE at the site is presented. Please state whether there is current evidence (e.g. presence of daughter products or conditions conducive to reductive dechlorination) to substantiate the assertion that natural attenuation will most likely degrade the TCE in groundwater at the site.**

Response: There is no evidence that TCE is present at significant concentrations at Site 13. TCE was detected at 5 of 121 samples at very low concentrations that show no evidence of a definable plume. The focus on the breakdown of TCE is unwarranted.

49. **Comment:** **<u>Section 6.6.2, Risks from Groundwater, Page 6-35</u>: This section states that "there is no potential for unacceptable risk for the commercial/industrial worker at Site 13." This assertion ignores the inherent uncertainty present in all risk assessments. Please rephrase this sentence so that it states that there is a low potential instead of no potential.**

Response: The text will be revised as requested.

50. **Comment:** **<u>Section 6.7.4.1, Risk to Small Mammals, Page 6-39</u>: It is unclear why Tarry Refinery Waste (TRW) is not included in the Ecological Risk assessment (ERA). The text discusses that TRW presents an acute toxicity hazard to burrowing animals and is considered to be a source of elevated PAHs, benzene, and lead throughout Site 13. It is also present on the surface in some areas. Please provide justification for not including this material in the ERA.**

Response: The Navy recognizes that TRW poses a threat to human health and the environment and plans to address the TRW during the FS.

51. **Comment:** **<u>Figure 6-4, Site 13 RI, TPH, and EBS Soil and Groundwater Sample Locations</u>: There are several symbols that do not have associated identifiers. For example, there are two symbols near the BOR-18 label and an unlabeled symbol beneath the words "Trench # 2." Please label all location symbols with the appropriate identifier.**

Response: The figure will be revised to identify all symbols for the draft final RI report.

52. **Comment:** **<u>Figure 6-8, Site 13 Trench Locations and Past Excavations</u>: The northern boundary of the Free Product Removal Action (1993) is not visible on this map. Please revise the map so that the entire Removal Action area is visible.**

Response: The figure will be revised to show the entire removal action area for the draft final RI report.

53. **Comment:** **<u>Figure 6-11, Site 13 Total Petroleum Hydrocarbons in Groundwater</u>: It is difficult to assess the contouring because the values detected at each sampling point are not included on the map. Please include these values and the date the sample was taken next to each sampling location.**

Response: Appendix F of the RI report presents the TPH evaluation. The figure will be clarified by defining the 1,400 µg/L line as the ecological action level for TPH. The data will not be presented on the figure.

54. **Comment:** **<u>Table 6-3, Site 13 Statistical Summary of Soil Analyses</u>: It is unclear why this table does not include the maximum detected concentrations for all chemicals. For example, benzene was detected at 31,000 ug/kg at 028-S13-002, but the maximum concentration listed in this table is 1,000 ug/kg. There are other samples with concentrations above 1,000 ug/kg. Limiting the concentration to 1,000 ug/kg will result in**

underestimating the risk associated with this site. Please include all validated data in the summary table.

Response: Results for the seven samples collected during the pilot test for terrain conductivity mapping were omitted from Table 6-16, but no other soil data were omitted. The results for benzene in soil at concentrations greater 1,000 micrograms per kilogram (µg/kg) were for *ex situ* samples from soil that has been removed from the site. Table 6-3 is independent from the risk assessments.

SITE 19 GENERAL COMMENTS

1. **Comment:** **The nature and extent of PCE and TCE contamination soil and groundwater in the southern part of the site has not been determined. The concentration of PCE in MWD13-4 increased from 7 ug/L in July 2001 to 12 to 22 ug/L in 2002 and 2003. This suggests that there may be an upgradient or cross-gradient source of these solvents. The text in Section 7.4.2 suggests that since the hazardous waste storage area (Yard D-13) operated until 1996, and soil samples have not been collected since 1990, it is possible that spills occurred between 1990 and 1996 and that there may be an area of contaminated soil beneath Yard D-13. In addition, the source and extent of PCE and TCE in the vicinity of DHP-S19-02 is unknown. Since the extent of PCE and TCE in groundwater has not been determined and the source of these contaminants is unknown, it is possible that the risk associated with this site was underestimated. It is also important to understand the extent of contamination in order to select and cost appropriate remedies in the FS. Please discuss the fact that the extent of PCE and TCE in groundwater and soil has not been determined in the southern part of the site and also discuss how these data gaps will be filled.**

   Response: The Navy believes that the extent of the groundwater risk is defined sufficiently to allow the site to move forward to a FS. Data gaps associated with tetrachloroethene (PCE) and TCE in soil exist because of the continued operation of the facility after the soil sampling event; however, the conclusions of the RI report would not change with additional sampling. Data gaps can be closed during the design data collection phase of the FS.

2. **Comment:** **Another data gap appears to be the eastern part of the site near the sewer line and former Building 609. The storm sewer line could be a source of contamination if there are cracks or breaks in the line. Samples have not been collected in this area. Please discuss how this data gap will be addressed.**

Response: Groundwater monitoring well M19-05 is located approximately 80 feet downgradient from the storm sewer line. This well should be sufficient to evaluate groundwater conditions downgradient from the storm sewer and determine if releases from the storm sewer have occurred.

SITE 19 SPECIFIC COMMENTS

1. **Comment:** **<u>Page 7-2, second paragraph</u>: Were any soil samples taken beneath the USTs when they were closed in place to confirm that they did not leak? Were any VOC samples taken of the soil?**

   Response: The underground storage tanks (UST) were not used and closed in place, so no samples could be collected from below the USTs. Five soil samples were collected from sampling location BD13-5 within 25 feet of the USTs for VOC analysis. Groundwater samples were collected from monitoring well 372-MW2 25 feet downgradient from the USTs. No evidence of CERCLA contamination was observed at these locations.

2. **Comment:** **<u>Section 7.2, Site 19 Environmental Investigations, Pages 7-4 through 7-9:</u> The text frequently indicates that one or more VOCs was detected during an investigation, but the specific VOCs are not discussed. In some cases, the concentrations of PAHs or specific SVOCs are discussed, so it is unclear why the VOCs are not specifically discussed. Please specify the VOCs that were detected during each investigation and discuss the concentration(s) at which they were detected.**

   Response: The draft final RI report will be revised to include more details of each sampling event.

3. **Comment:** **<u>Section 7.2.2, Follow-On Investigation, 1994, Page 7-5:</u> The text lists the direct push sample locations as DHP-S19-01 through DHP-S-19-05, but these points appear to be labeled SHP-S19-01 through SHP-S19-05 on Figure 7-3. As a result, it is unclear if the text and figures discuss and depict all of the sampling points. Please resolve this discrepancy.**

   Response: The text does not describe all of the sampling locations for this investigation. The draft final RI report will be revised to include the following description of the SHP series borings: "Three sampling locations SHP-S19-01 through SHP-S19-03 assessed shallow groundwater north and east of Yard D13" for petroleum hydrocarbons.

4. **Comment:** **<u>Page 7-5, first paragraph:</u> Please state which metals were found and what the concentrations were.**

Response: The draft final RI report will include results from each investigation.

5. **Comment:** **<u>Page 7-5, second paragraph:</u> Please state which VOCs, pesticides and metals were found and at what concentrations.**

Response: The draft final RI report will include results from each investigation.

6. **Comment:** **<u>Page 7-6, middle paragraph</u>: What VOCs were found and what were their concentrations?**

Response: The draft final RI report will include results from each investigation.

7. **Comment:** **<u>Page 7-7, first paragraph</u>: What VOCs were found? What were the concentrations of the VOCs and the PAHs?**

Response: See the response to Site 19 Specific Comments No. 5 and 6 above.

8. **Comment:** **<u>Page 7-7, PAH section, second paragraph</u>: This paragraph is written well, giving the type of contaminant, the ranges of concentrations and the location of the contamination.**

Response: This comment is noted.

9. **Comment:** **<u>Page 7-8, third paragraph</u>: Please give results of the sampling here.**

Response: See the response to Site 19 Specific Comments No. 5 and 6 above.

10. **Comment:** **<u>Section 7.3.1, Potential Sources, Page 7-10:</u> This section states that USTs 616-1 and 616-2 "have never contained hazardous waste," but Section 7.1.2 stated that the USTs "are not believed to have ever contained hazardous materials" and there is no supporting documentation for these statements. Please clarify how it is known that these USTs never contained hazardous materials or state that this is a conjecture and discuss degree of uncertainty involved. If there is no concrete evidence to support the statements, the potential presence of hazardous materials in the vicinities of these USTs is unknown and this represents a data gap that should be investigated before the FS.**

Response: See the response to Site 19 Specific Comment No. 1 on page 54.

11. **Comment:** **<u>Section 7.3.2, Analytical Data Evaluation, Page 7-10:</u> This section states that detection limits (SQLs) were sufficiently low to permit identification of potential health risks, but for both soil and**

groundwater, laboratory detection limits for some chemicals exceeded residential PRGs. Please explain how both of these assertions can be true.

Response: See the response to Site 9 General Comment No. 7 on page 20.

12. **Comment:** **<u>Page 7-15, Section 7.3.4, second and third paragraph</u>: Please explain why the metals that exceeded background do not pose a risk. Is it because they are below PRGs?**

Response: See the response to Global General Comment No. 4 on page 7 regarding risk, and the response to Site 13 Specific Comment 31 on page 46.

13. **Comment:** **<u>Section 7.4.1, Nature and Extent of Chemicals in Soil, Page 7-16</u>: This section notes that compounds in the pesticide, PCB, SVOC, metals, TPH, and VOC analyte groups have been detected in soil samples collected at the site but does not discuss the nature and extent of these compounds. Only arsenic and BaP are discussed because they were identified as COCs in the risk assessment. The nature and extent section should be independent of the risk assessment and should discuss all compounds detected above PRGs or background.**

Response: See the response to Global General Comment No. 4 on page 7 .

14. **Comment:** **<u>Page 7-16, Section 7.4.2:</u> Why is benzene not considered a risk driver? Please provide a supporting explanation for this assertion.**

Response: In Appendix H, Table H-8.3.3 RME, EPA RAGS Part D, Table 7a shows the risk from benzene exposure at Site 19. Benzene was not selected as a COPC for soil. For groundwater, the risk from ingestion of groundwater at Site 19 is 3.12×10^{-7}. The risk from dermal contact (bathing and showering) is 3.42×10^{-8}. The risk from inhalation of benzene is 1.84×10^{-8}. The total risk contributed by benzene in groundwater at Site 19 is 3.6×10^{-7}. Only chemicals posing risk greater than 1×10^{-6} were considered risk drivers at Site 19.

15. **Comment:** **<u>Page 7-16, Section 7.4.2, second paragraph</u>: Please explain the presence of contaminants in MWD 13-1, MWD 13-2, and M19-05. In which direction does groundwater flow?**

Response: During six sampling events, samples from monitoring well MWD13-1 contained 1,1-DCA at 2 to 12 µg/L (all below the PRG). The concentrations of 1,2-DCE (total) during the six events were also below

the PRG, and the detected naphthalene concentration of 4 µg/L was likewise below the PRG. Samples from monitoring well MWD13-2 contained a detectable concentration of 1,1,1-TCA during one of eight events. The detected concentration (and detection levels) of 1,1,1-TCA were all below the PRG. Monitoring well MWD13-2 also contained detectable concentrations of 1,1-DCA during six events; however, all concentrations were below the PRG. Well M19-5 contained a detectable concentration of 1,2-DCP during one sampling event. The groundwater gradient at Site 19 is relatively flat but generally flows west toward the Seaplane Lagoon. Groundwater is locally influenced by remedial activity around Building 397.

The paragraph in question states that there was a possible release of VOCs from "spillage during transportation or storage of these chemicals... thereby allowing them to enter the soil column through cracks or other openings in the floor of Yard D-13." This model explains the presence of groundwater contamination in wells MWD13-3 and MWD13-4 because these wells contained consistent concentrations of risk driver chemicals.

16. **Comment:** **<u>Section 7.4.2, Nature and Extent of Chemicals in Groundwater, Page 7-16:</u> All chemicals detected above PRGs or background should be discussed in the nature and extent section. For example, even though benzene was not identified as a risk driver, it should be discussed in this section because it was detected above its PRG.**

Response: See the response to General Comment No. 4.

17. **Comment:** **<u>Section 7.4.2, Nature and Extent of Chemicals in Groundwater, Page 7-17</u>: This section states that the PCE detection at DHP-S19-02 may be biased high based on the sampling method. Please state which sampling method was used and why it may be biased high. Also, TCE was detected at the same well at the same depth in the same year, but the bias of the sampling method is not mentioned as an explanation. Please explain whether the presence of TCE is also believed to be due to the sampling method or if both the PCE and TCE were probably present at the concentrations detected by the laboratory.**

Response: DHP-S19-02 is a hydropunch sampling location as stated on Page 7-5 and shown on Figure 7-7. Grab groundwater samples from Hydropunch samples may be biased high because of soil particulates that could be entrained in the water sample. Although the data suggest that PCE and TCE were present at the detected concentrations, the sampling methods could have biased the results for both compounds. Groundwater monitoring wells MWD13-2 and D19-01 located approximately 10 feet from sampling location DHP0S19-02 provide a more representative

picture of the groundwater conditions in this portion of Site 19. Site 19 is recommended for further evaluation during the FS to address PCE and TCE in groundwater.

18. **Comment:** **<u>Section 7.4.2, Nature and Extent of Chemicals in Groundwater</u>: Only PCE and TCE are discussed in-depth in this section. All chemicals detected above PRGs or background should be discussed in the nature and extent section, including daughter products of PCE and TCE, like cis-1,2-DCE. Please discuss all chemicals that were detected above PRGs or background in the nature and extent section.**

Response: See the response to Global General Comment No. 4 on page 7.

19. **Comment:** **<u>Section 7.5, Fate and Transport, Pages 7-18 and 7-19:</u> According to the text in this section, chlorinated hydrocarbons are "not expected to migrate far before dechlorination, and dilution will attenuate them to below their respective PRGs." These statements are not supported by a discussion of natural attenuation parameters in the text. Please either include a discussion of site-specific natural attenuation parameters in the text or delete the quoted statement.**

Response: The quoted text will be deleted from the draft final RI report. Site 19 has is recommended for further evaluation during an FS.

20. **Comment:** **<u>Section 7.8.2, Risk Assessments Conclusions and Recommendations, Page 7-27:</u> The text in this section concludes that there is low to no significant risk. However, the text in Section 7.7.6 concludes that the HQs and QE indicate that a potential for risk to small mammals from copper and to raptors from barium and lead exists. Please revise the text to include this information.**

Response: The text will be revised as follows:

"The results of the ERA indicate that a potential for risk to small mammals from copper and to raptors from barium and lead exists; however, the overall site risk to ecological receptors is low because the site is completely paved and no habitat exists at Site 19."

21. **Comment:** **<u>Figure 7-7, Site 19 Tetrachloroethene in Groundwater and Figure 7-8, Site 19 Trichloroethene in Groundwater:</u> The contour line drawn around DHP-S19-02 is not labelled. This contour should be queried to the west, north, and east because no data points exist to suggest that the plume is not larger. Please label the contour lines and query them to the west, north and east.**

Response: The contour line for the PCE figure will be labeled. The lines for the PCE and TCE figures will be dashed to show that the nondetect line is inferred.

SITE 22 GENERAL COMMENTS

1. **Comment:** **The calculated risk presented for Site 22 cannot be considered the total risk because analytical data from the most contaminated areas was omitted. The text in Sections 8.3.2.1 and 8.3.2.2 indicates that PAH data and soil samples collected from areas with petroleum saturated soil and that groundwater samples from the floating product area were not included in the risk assessment. These omissions will most likely result in a significant underestimation of risk. The soil data summary tables indicate that benzene was found at 3,800 ug/kg which is significantly above the PRG of 600 ug/kg, that ethylbenzene was found at 570,000 ug/kg compared to a PRG of 8,900 ug/kg, that toluene was found at 840,000 ug/kg compared to a PRG of 520,000 ug/kg and that xylenes were found at 2,600,000 ug/kg compared to a PRG of 210,000 ug/kg. These maximum concentrations are one to two orders of magnitude above their respective PRGs so any risk assessment that does not include these constituents will underestimate the risk associated with site soil. Also, the omission of PAHs because of elevated detection limits is inappropriate and will also result in underestimation of risk. Similarly, the omission of groundwater data from the areas with a floating product plume will also result in an underestimation of risk. It is not sufficient to omit this data because it was collected under the TPH program, since all validated data should be acceptable for quantitative evaluation of risks. Please include all validated data for this site in the risk assessments.**

Response: The comment is correct. Risk is underestimated because samples containing petroleum-saturated soil or floating petroleum product were excluded from EPC calculation; however, the site risk was calculated to be greater than 1×10^{-5} in soil and 1×10^{-3} in groundwater, so the conclusion about further action at the site would not change. The risk at the site is primarily from petroleum contamination, and the site is currently being remediated under the TPH Program.

PAH results for samples collected during the 2003 PAH investigation were used to calculate risk in soil, and none of these PAH data were omitted from the risk assessment. Inclusion of the data from areas of petroleum saturation would not change the RI conclusions. Risks at Site 22 are solely from its use as a gasoline station (or from background metals), and those risks will be mitigated under the TPH Program.

2. **Comment:** **The omission of PAHs and benzene, toluene, ethylbenzene, and xylenes (BTEX) detected in soil and groundwater data from the areas with floating product from the risk assessment had the effect that these chemicals were not considered risk drivers and were therefore not discussed in the nature and extent sections or presented in figures. All chemicals that were detected above PRGs should be included in the discussion of the nature and extent of contamination. Please include all chemicals that were detected above PRGs in the nature and extent of contamination section. Also, since this information was not presented, it is unclear whether there are any data gaps or if the extent of soil and groundwater contamination has been completely determined. Please discuss whether the extent of soil and groundwater contamination has been determined, and if not, discuss how any data gaps will be addressed.**

Response: PAHs (as BaP equivalents), benzene, ethylbenzene, and xylene were identified as risk drivers (see Section 8.8.2). The reason these compounds are not discussed in detail in the nature and extent section is because they are petroleum products being addressed under the corrective action plan (CAP) for CAA 4C. The draft final RI report will include a more detailed discussion of the nature and extent of TPH compounds.

Although risk in the areas of petroleum-saturated soil or floating petroleum may be underestimated, the text states that remedial activity is planned under the TPH Program. Because of the petroleum saturation, the data would not be useful in assessing if CERCLA contamination is present (because of matrix interference). The RI report does not conclude that risk to soil or groundwater is acceptable. Instead, it states that petroleum contamination will be remediated under the TPH Program.

SITE 22 SPECIFIC COMMENTS

1. **Comment:** **<u>Page 8-2, first paragraph</u>: The activities associated with Structure 547-1 and Building 547 seem to have been switched in this paragraph. The OWS is outside Structure 547-1 and would be associated with the car wash.**

Response: The draft final RI report will be revised to identify the buildings correctly. The text will read ". . . a fuel pump island (Structure 547), and a car wash (Building 547-1)."

2. **Comment:** **<u>Section 8.1.2, Site 22 History, Page 8-2:</u> One UST was punctured in 1980, and this section states that it was reportedly repaired between 1980 and 1987. The amount of contamination associated with this puncture would differ significantly depending on whether the UST was repaired the year of the puncture or seven years later. If there is**

any way to determine with more accuracy the year that the UST was repaired, please do so and revise the text accordingly.

Response: The Navy has been unable to find any information regarding the exact date of repairs to the UST; however, soil and groundwater data from the site are sufficient to characterize petroleum contamination in soil and groundwater.

3. **Comment:** **<u>Page 8-5, middle paragraph</u>: M07C-08 is shown as being on the eastern border on Figure 8-2 as opposed to the western border stated in the text.**

Response: **The figure is correct.** The text will be revised to read " on the eastern border of the site."

4. **Comment:** **<u>Page 8-5, last paragraph</u>: Where is manhole 6J-1B? Please include the location on the figures.**

Response: The location of this manhole will be added to the figures.

5. **Comment:** **<u>Section 8.2.2, Investigations Conducted Under the Installation Restoration Program, Page 8-7:</u> The section that discusses the PAH Background Study states that "in general, the PAH background study detected PAHs in concentrations less than PRGs and below site-specific action levels." This implies that there were some exceedances. Please state the number of exceedances and the maximum value detected.**

Response: The results of this investigation are discussed on page 8-17 under the discussion of the nature and extent of BaP equivalents. Tables outlining the results of each investigation will be prepared for the site to aid in an understanding of the investigation process.

6. **Comment:** **<u>Page 8-8, fifth paragraph</u>: Which figure contains sampling locations CA04-05 and CA04-06? Which table includes the results of these samples?**

Response: The text describes an investigation of CAA-4C. This TPH site roughly correlates with Site 22, but sampling locations CA04-05 and CA04-06 are outside the border of the CERCLA site. Data from these locations are presented with the OU-2B Site 4 data. The text will be revised to state that the sampling locations are outside of the site boundary.

7. **Comment:** **<u>Section 8.2.5, Removal Actions, Page 8-9:</u> The text in the last paragraph of this section states the number of sampling locations where TPH and lead were detected but omits the number of locations where BTEX compounds were detected. Please include the number of sampling locations where BTEX was detected in this paragraph.**

Response: Appendix F of the RI report presents the results of the removal action. The text will be revised to refer to Appendix F. The areas where high concentrations were detected are discussed in Appendix F.

8. **Comment:** **<u>Page 8-9, Section 8.2.5:</u> The labeling of the sampling locations on Figure 8-2 is very unclear. There are multiple listings of 547-1, 547-2, 547-3 etc. What distinguished soil from groundwater samples? Are they performed together? There is no way to find what concentrations correlate with a particular well. Where is this information? Groundwater sample 547-8 appears to be taken adjacent to the fuel line and not near the USTs.**

Response: The removal action was completed under the TPH Program, and all sampling locations for samples collected during this removal action are presented in blue on the figure. In addition, the groundwater sample from the UST excavation is mislabeled in the text as "547-8" and should be "547-L8." In addition, two groundwater samples were collected from the excavation. Appendix E of the RI report presents all the data. All data pertaining to the TPH investigations and cleanup are presented in the "Draft Corrective Action Plan for Corrective Action Area 4C" dated July 30, 2003, by Tetra Tech EM Inc.

In addition, although it is stated that lead was sampled for, Table 8-1 does not list lead as an analyte for soils. Where are the lead results? The statement that lead was not detected in any of the three soil samples analyzed is therefore not surprising, although it is extremely misleading. As a double check, how can lead be found in soils from the fuel lines and not in the leaking USTs? The USTs held the same product as that found in the fuel lines.

Response: Table 8-1 shows the analytical groups for Site 22 soil samples. Lead is a metal, and metals are listed as an analytical group.

It is not uncommon for the primary area of release associated with UST systems to be the piping below the fuel pumps.

9. **Comment:** **<u>Page 8-10, Section 8.3.1, third bullet:</u> EPA is pleased to see that the OWS is included as a potential source, but since no sampling has been**

done beneath this OWS and there are no monitoring wells nearby, the extent of potential contamination from this OWS remains a data gap.

Response: The OWS associated with the car wash may have received long-chain TPH compounds or "road grime" and soapy water. There is no indication from the site history that CERCLA contamination was discharged to the OWS at Site 22. The Navy does not believe that this OWS warrants further evaluation.

10. **Comment:** **<u>Section 8.3.2.1, Soil, Page 8-11:</u> This section states that soil samples collected from petroleum saturated soil and PAHs were not included in the risk assessment, so as a result the calculated risk cannot be considered to represent the total risk associated with this site. As discussed in the general comment above, this data should be included in the risk assessments. Please include this data in the risk assessments and delete the statements that data were not included in the risk assessments.**

Response: This comment is correct. The risk assessment underestimates risk from petroleum compounds because petroleum-saturated soil samples and groundwater samples with floating product were omitted from the data set; however, the risk from petroleum contamination is already greater than the risk management range, and the site is currently being remediated under the TPH Program. Revising the risk assessment will not change the conclusions for this site. The Navy requests that this risk assessment be accepted as is.

11. **Comment:** **<u>Page 8-13, first paragraph, last sentence</u>: Where is the floating product contamination being addressed? Is the lead contamination also being addressed through this venue?**

Response: Pages 8-2 and 8-3 state that the California Regional Water Quality Control Board, San Francisco Bay Region (RWQCB), approved a CAP in September 2003. Page 8-9 states that the CAP addresses remedial alternatives for cleanup of all TPH-related compounds at the site. Lead in groundwater is not identified as a risk in the CAP or the HHRA for Site 22. However, lead in soil is recommended for further evaluation under the FS (page 8-32)

12. **Comment:** **<u>Section 8.3.2.2, Groundwater, Page 8-13:</u> This section states that groundwater samples collected from floating product areas were not included in the risk assessment so as a result the calculated risk cannot be considered to represent the total risk associated with Site 22. Please include this data in the risk assessment and delete the**

statement that data from the areas with floating product were not included in the risk assessment.

Response: The Navy agrees that risk from petroleum compounds is underestimated in the RI report. See the response to Site 22 General Comment No. 1 on page 59 and Site 22 Site Specific Comment No. 10 on page 69.

13. **Comment:** **<u>Page 8-13, last paragraph</u>: TCE was detected in 2 out of 77 samples. 75 out of 77 samples has detection limits set above the Region 9 PRG. 77 out of 77 samples for vinyl chloride had detection limits set above the PRG, so any conclusions drawn from this data about frequency of detection are inconclusive.**

Response: Achieving detection limits below the PRG for TCE is not possible on a routine basis, especially for environmental samples that include matrix interferences. The samples were analyzed with detection limits that are as low as technically feasible using routine EPA methods. The samples collected at Site 22 were analyzed by CLP laboratories to detection levels outlined by EPA protocol, and 51 of the 77 samples had detection levels of 1 µg/L or lower.

Site 22 also has petroleum-related contamination that produces matrix problems because many hydrocarbons elute at the same retention time as TCE, resulting in elevated detection limits for TCE. Nine samples have elevated detection levels (exceeding 50 µg/L) directly resulting from the petroleum contamination present at the site.

14. **Comment:** **<u>Section 8.3.2.2, Groundwater, Page 8-13</u>: This section states that "low concentrations" of 1,2-DCA were detected in groundwater, but according to the table on this page (Groundwater Analytical Results for Chemicals Used at Site 22), 1,2-DCA was detected at 38 ug/L. This result is significantly higher than the 1,2-DCA tap water PRG (0.12 ug/L). Please either delete the word "low" from the text or explain why a result more than two orders of magnitude higher than the PRG should still be considered "low."**

Response: The word "low" will be deleted from the text.

15. **Comment:** **<u>Section 8.3.2.3, Soil Gas, Page 8-14:</u> The results of the two soil gas samples collected at Site 22 are not discussed. Please discuss the results in the text. Also, please explain how the results are helpful in evaluating indoor air risk in the HHRA if detection limits for many of the nondetected chemicals used at the site exceeded EPA Region 9 residential PRGs.**

Response: See the response to Site 9 Specific Comment No. 12 on page 22.

16. **Comment:** **<u>Section 8.3.4, Background Evaluations, Page 8-14:</u> This section states that only compounds that are considered to be present in concentrations greater than background conditions and identified in the risk assessment as COCs will be discussed in the nature and extent section. All compounds that were present in concentrations or frequencies statistically greater than background should be discussed in the nature and extent section, regardless of whether they were identified as COCs in the risk assessment.**

Response: See the response to Global General Comment No. 4 on page 7.

17. **Comment:** **<u>Section 8.3.4, Background Evaluations, Page 8-15:</u> The discussion of lead in soil states that site concentrations ranged from 2.1 mg/kg to 67.8 mg/kg, but then states that the sample collected at MW547-5 contained 9,890 mg/kg of lead. Please resolve this discrepancy.**

Response: The text will be revised as follows:

"The statistical evaluation of lead in soil determined that Site 22 lead exceeds background. A review of the range of concentrations shows that lead concentrations at Site 22 are well above background concentrations (Appendix A). Background concentrations ranged from 1.3 to 41 mg/kg, while site concentrations ranged from 2.1 to 9,890 mg/kg. Three soil samples (547-6 and 547-11, collected at 2 feet bgs and MW-547-5, collected between 0.5 and 1 foot bgs) contained 160, 330, and 9,890 mg/kg of lead, respectively. Samples 547-6 and 547-11 were collected from below the fuel islands. Sample MW547-5 was collected from an open area east of the paved refueling area. Based on these three samples , the concentrations of lead detected at Site 22 are considered above the background lead range for Alameda Point."

18. **Comment:** **<u>Page 8-15, fifth paragraph, first sentence</u>: It is a contradiction to state "The statistical evaluation of arsenic in groundwater determine that Site 22 arsenic exceeds background. A review of the range of concentrations, however, shows that concentrations of arsenic at Site 22, are consistent with background concentrations." Part of comparing inorganics to background is to determine whether the distribution of the site contaminant is the same as the distribution of the background.**

Response: The text should have explained that the statistical evaluation for arsenic in Site 22 groundwater was based only on a comparison of detection

frequencies using the test of proportions (that is, comparison of median concentrations was not possible because of the low detection frequency in the background data set, and comparison of the upper quantiles was not possible because the maximum concentration in both populations was nondetect). See the response to Site 9 Specific Comment No. 17 on page 24 concerning the limitation and caveats associated with comparing detection frequencies based on the test of proportions. Additional comparison of the two populations was conducted qualitatively using outlier box plots and quantile tables. This comparison showed that the site median concentration of arsenic of 0.0064 mg/L was only slightly higher than the background median of 0.0052 mg/L but that the site population exhibited greater skewness (that is, a longer right-hand tail), resulting in higher concentrations for the upper quantiles of the site data set. Four detected arsenic concentrations exceeded the maximum detected background concentration of 0.04 mg/L, and the maximum detected site concentration of 0.086 mg/L was approximately two times the maximum detected background concentration. The statement that the site distribution is consistent with background is based on the fact that, except for the four detected values that slightly exceed the upper range of the background distribution, the two distributions are quite similar.

19. **Comment:** **<u>Section 8.4, Nature and Extent of Chemicals in Soil and Groundwater, Page 8-16:</u> All chemicals that exceeded PRGs or background concentrations should be included in this section, as well as the fate and transport section. Chemicals should not be excluded for any reason. The nature and extent section should be independent of the risk assessment process, so the degree of risk that a chemical poses should not be used as a qualification for whether it is included in the nature and extent section.**

Response: See the response to Global General Comment No. 4 on page 7.

20. **Comment:** **<u>Page 8-16, second and third paragraph:</u> It is unacceptable to discard thallium from being a concern when it appears above background. EPA disagrees with the conclusion that arsenic in soil, and arsenic, manganese and thallium in groundwater are at background levels.**

Response: The Navy contends there is no evidence to support the conclusion that thallium concentrations in Site 22 groundwater exceed background. Both the site and background data sets are characterized by very low detection frequencies (4 out of 51 measurements, or 8 percent for the site, and 3 out of 193 measurements, or 2 percent for the background area). In addition, the highest reported concentrations in both populations are nondetects. The only statistical evaluation possible for thallium was a comparison of the relative detection frequencies (see the response to Site 9

Specific Comment No. 17 on page 24 concerning the limitations and caveats associated with comparing detection frequencies based on the test of proportions). Additional comparison of the two populations using outlier box plots and quantile tables showed that the two distributions were comparable. See the response to Site 22 Specific Comment No. 18 on page 66 concerning the evaluation of arsenic in Site 22 groundwater. Manganese concentrations in groundwater are statistically greater than the ambient data set and will be discussed in the nature and extent section of the report.

The Navy contends that there is no evidence to support the conclusion that arsenic concentrations in Site 22 soil exceed the background concentration. Non-significant statistical results were reported for the comparison of detection frequencies (test of proportions) and comparison of the right-hand tails (quantile test). Comparison of box plots and quantile tables also show that the two distributions are comparable (that is, both the maximum detected and median concentrations are almost identical).

21. **Comment:** **<u>Page 8-16, fifth paragraph</u>: EPA disagrees with the assertions in this paragraph.**

Response: See the response to Site 22 Specific Comments No. 18 and 20 above.

22. **Comment:** **<u>Section 8.4.1, Nature and Extent of Chemicals in Soil, Page 8-17:</u> The extent of lead contamination in the vicinity of MW547-5, where lead was detected at a concentration of 9,890 mg/kg, has not been determined. It is impossible to characterize the extent of lead contamination without additional samples. Please discuss how this data gap will be addressed. Also, please explain why it is believed that this lead contamination was caused by lead-based paint rather than leaded gasoline, lead-acid batteries or another industrial activity.**

Response: The data gap will be addressed during the implementation phase of the FS. The Navy does not believe that the lead is from leaded gasoline because the sample was collected from an area outside of the gasoline distribution area and because the concentrations are higher than expected from leaded gasoline. There are no documented industrial activities at Site 22, which was used as a barracks and then as a gasoline station. It is possible that a lead acid battery or lead-based paint was the source of the lead contamination near MW547-5.

23. **Comment:** **<u>Page 8-17, Section 8.4.1, first paragraph:</u> EPA disagrees with the conclusion that there is no evidence of CERCLA compounds at the site. TCE and DCA were found in the groundwater.**

Response: The text will be revised to read as follows: "There were no documented uses of CERCLA compounds at the site."

24. **Comment:** **<u>Page 8-17, Section 8.4.2:</u> It is possible that the DCA and TCE were associated with the car wash.**

Response: The Navy is not familiar with the use of 1,2-DCA or TCE in car wash operations. The use of 1,2-DCA as a gasoline additive is documented in the Agency for Toxic Substances and Disease Registry (ATSDR) website.

25. **Comment:** **<u>Section 8.4.2, Nature and Extent of Chemicals in Groundwater, Page 8-18</u>: This section states that 1,2-DCA was "most likely used as an additive in gasoline" and will therefore not be addressed further under CERCLA. Please clarify that even though it is not definite that 1,2-DCA is present at the site because it is an additive in gasoline, 1,2-DCA contamination will be addressed in the TPH program.**

Response: "Will not be addressed further under CERCLA," will be removed from the text.

26. **Comment:** **<u>Page 8-18, Section on 1,2-DCA:</u> Since car wash operations occurred at this site, it is possible that 1,2-DCA was used as a solvent. Please provide better supporting rationale for assuming it was a gasoline additive.**

Response: The Navy is not familiar with the use of 1,2-DCA in car wash operations. The use of 1,2-DCA as a gasoline additive is documented in the ATSDR website. In addition, the text states that 1,2-DCA was detected coincident with TPH contamination, further supporting its release at the site within petroleum products.

27. **Comment:** **<u>Section 8.4.2, Nature and Extent of Chemicals in Groundwater, Page 8-18:</u> This section notes that TCE was detected next to a sanitary sewer line. The text states that there is no history of TCE use at this site, but TCE was a common degreaser that could have been used at this former gasoline station. Please explain whether the proximity of the TCE detection to the sanitary sewer line is significant and, if so, discuss the associated implications. Also, please delete or clarify the statement that there is no history of TCE use at this site.**

Response: Automobile service activities were not conducted on site; however, it is possible that some engine cleaning took place on site (as stated on pages 8-18 and 8-19). The two locations where TCE was detected were close to sanitary sewer lines that extend north to south along the eastern

property boundary and in the central portion of the site. It is possible that TCE could have infiltrated sewer lines on Site 4 located north of the site and exfiltrated to Site 22. The text states that TCE may have been used as an engine cleaner at Site 22, so the statement will not be revised.

28. **Comment:** **<u>Page 8-18, third to last paragraph:</u> The single detection of TCE in two monitoring wells is probably due to the fact that 75 out of 77 samples had detection limits set above the PRG rather than that there is no problem with TCE at the site.**

Response: Achieving detection limits below the PRG for TCE is not possible on a routine basis, especially for environmental samples that include matrix interferences. The samples were analyzed with detection limits that are as low as technically feasible using routine EPA methods. The samples collected at Site 22 were analyzed by CLP laboratories to detection limits outlined by EPA protocol. Of the 77 samples analyzed for TCE, 51 had detection limits of 1 μg/L or lower.

Site 22 also has petroleum-related contamination that produces matrix interference because many hydrocarbons elute at the same retention time as TCE, resulting in elevated detection limits for TCE. Nine samples have elevated detection limits (exceeding 50 μg/L) directly resulting from the petroleum contamination present at the site.

29. **Comment:** **<u>Page 8-19, second paragraph:</u> 71 out of 77 samples had detection limits set higher than the PRG, so it is not possible to conclude that PCE detections at the site are not of concern.**

Response: The samples collected at Site 22 were analyzed by CLP laboratories to detection limits outlined by EPA protocol. Of the 77 samples analyzed for PCE, 50 had detection limits of 1 μg/L or less. Site 22 was used as a barracks and then as a gasoline station; thus, it has no history of industrial use.

30. **Comment:** **<u>Page 8-19, Section 8.5:</u> Where is well M07C-09 on the figures?**

Response: The text will be revised to refer to well MW547-4.

31. **Comment:** **<u>Page 8-28, Section 8.8.1:</u> The problem with detection limits consistently being over PRGs for the majority of VOC samples analyzed invalidate the conclusions presented in this section. In addition, EPA disagrees with the conclusions presented regarding arsenic, manganese and thallium.**

Response: See the response to Site 22 Specific Comments No. 28 and 29 on page 69 regarding VOC conclusions.

As previously stated in the response to EPA Site 9 Specific Comment No. 7 on page 19, in order to make conservative estimates of risk, the Navy used a stochastic modeling technique to account for the uncertainty introduced by varying levels of left-censored (nondetect) data in calculating EPCs. This approach treats each censored datum as a random, uniform variable that can assume any value between zero and its respective reporting limit. Monte Carlo simulation is used to develop a distribution of the range of possible estimates for a UCL of the mean using the "bounding" approach described in EPA (2002). The 95th percentile of this distribution is used as a conservative upper-bound estimate for the EPC. Use of random surrogate values for individual censored measurements can be applied in cases with single or multiple detection limits and yields conservative upper-bound estimates of the UCL that reduce the likelihood of underestimating the true mean concentration given the analytical uncertainties in the sample data.

Regarding arsenic and thallium, see the response to Site 22 Specific Comments No. 18 and 20 on pages 66 and 67. Manganese will be considered further during the FS.

32. **Comment:** **<u>Page 8-29, Section 8.8.2:</u> The risks from PCE and TCE are not adequately addressed because 71/77 and 75/77 samples respectively for each chemical had detection limits set above the PRG. Therefore the conclusions presented here are not supportable.**

Response: See the response to Site 22 Specific Comments No. 28 and 29 on pages 69 regarding the VOC conclusions. See also the response to Site 22 Specific Comment No. 31 on page 70 regarding conclusions based on risk.

33. **Comment:** **<u>Section 8.8.1, Nature and Extent of Chemicals, Page 8-29</u>: According to the text in Section 8.2.2, the Storm Sewer Investigation conducted in 2000 resulted in the conclusion that there was damage in one section of the storm drain, but this section states that the storm system was found to be in sound condition. Please discuss the damage in this section to clarify and accurately portray the condition of the storm system.**

Response: The text in Section 8.2.2 will be revised to discuss the correct location of the damaged section of storm sewer located on Site 13 downgradient of Site 22. Section 8.8.1 will include a discussion of the damaged storm sewer because its location is downgradient of the groundwater

contamination plume and because it could potentially create a preferential migration pathway to Seaplane Lagoon.

34. **Comment:** **<u>Section 8.2.2, Risk Assessments Conclusions and Recommendations, Page 8-32:</u> The text recommends no further action for groundwater at Site 22, but this recommendation appears to be based on a risk assessment that did not include the maximum detected concentration of benzene, 34,000 ug/L. Since this concentration is five orders of magnitude above the PRG, the actual risk associated with groundwater is probably much higher than the calculated 2.6E-03. Groundwater cannot be recommended for no further action until the risk at this site has been reduced.**

Response: The text recommends no further action under CERCLA, and the report identifies risk from benzene that exceeds 1×10^{-4} and states that planned remedial action under the TPH Program will address groundwater contamination.

SITE 23 GENERAL COMMENTS

1. **Comment:** **Since Building 530 was used for missile rework operations, perchlorate is a potential site contaminant, but samples have not been collected and analyzed for perchlorate. Please discuss how this data gap will be addressed and discuss the potential presence of perchlorate in sections where potential sources and contaminants are discussed in the text.**

Response: Only reworking of the missile guidance systems was conducted at Building 530. Because the missile propellant and thruster systems were not serviced on site, there was no opportunity for a release of perchlorate to the environment.

2. **Comment:** **The text in Section 9.1.2 indicates that PCB oil was used for week control in the mini-storage area until 1963. Samples have not been collected from the mini-storage area, so the extent of potential PCB contamination has not been determined. Please discuss how this data gap will be addressed.**

Response: There is a data gap associated with the use of PCB-containing oil to control weeds in the mini-storage area. The Navy will collect additional data during the data collection phases of remedial design activities to address this potential issue. The Navy will recommend collection of additional soil samples within the vicinity of the mini-storage area for analysis of PCBs.

3. **Comment:** **The calculated risk presented for Site 23 cannot be considered the total risk because analytical data from the most contaminated areas was omitted. The text in Sections 9.3.2.1 and 9.3.2.2 indicates that soil samples collected from areas with petroleum saturated soil and that groundwater samples from the floating product area were not included in the risk assessment. These omissions will most likely result in a significant underestimation of risk. The soil data summary tables indicate that benzene was found at 2,100 ug/kg which is significantly above the PRG of 600 ug/kg and that ethylbenzene was found at 16,000 ug/kg compared to a PRG of 8,900 ug/kg. These maximum concentrations suggest that any risk assessment that does not include these constituents will underestimate the risk associated with site soil. Similarly, the omission of groundwater data from the areas with a floating product plume will also result in an underestimation of risk. It is not sufficient to omit this data because it was collected under the TPH program, since all validated data should be acceptable for quantitative evaluation of risks. Please include all validated data for this site in the risk assessments.**

Response: The Navy agrees that risk from petroleum contamination is underestimated but notes that active remediation was ongoing during the groundwater monitoring events. Considering that active remediation of petroleum contamination is ongoing, the level of uncertainty would be much greater if the petroleum-saturated soil or free product on groundwater were included in the risk assessment. It should also be noted that the RI report identifies an unacceptable risk from VOCs and SVOCs in groundwater at Site 23. The text will be revised to clarify that remedial action under the TPH Program will address the petroleum-related contamination. The conclusions for Site 23 would not have changed if the data on petroleum-saturated soil or free product had been included in the risk assessment; therefore, the Navy requests that EPA accept the document with the revised text.

SITE 23 SPECIFIC COMMENTS

1. **Comment:** **<u>Section 9.2.2, Investigations Conducted Under the Installation Restoration Program, Pages 9-5 through 9-10:</u> The text does not consistently discuss the contaminants that were found during each investigation, so it is difficult to understand why additional investigations were performed. Please briefly discuss the findings of each investigation to justify why additional investigations were conducted. Please also specify the specific VOCs that were detected.**

Response: The draft final RI report will include results from each investigation.

2. **Comment:** **<u>Page 9-4, Section 9.1.3.2:</u> The OWS should have confirmation samples taken to verify that they are not a source of contamination to soil and groundwater before they get regulatory concurrence for closure.**

Response: OWSs 529 and 530 were most likely associated with plane defueling and are likely the release mechanism for TPH contamination at Site 23. The draft final report will be revised to state that the OWSs are the likely release mechanism for TPH contamination.

3. **Comment:** **<u>Page 9-5, second to last paragraph:</u> The transformer pad was not sampled for PCBs.**

Response: The transformer was labeled as not containing PCBs. There is therefore no reason to sample soil near the pad for PCBs.

4. **Comment:** **<u>Section 9.2.2, Investigations Conducted Under the Installation Restoration Program, Page 9-6:</u> The text states that seven CPT samples (CPT-S10B-xx) were collected at this site, but Figure 8-3 does not include any sample identifiers that begin with "CPT," although there are sample identifiers that begin with "DHP" and "SHP." Please resolve this discrepancy.**

Response: The text states the following:

"Seven CPT points (CPT-S10B-01 through CPT-S10B-06 and CPT-S09-09) were driven across the site. No soil samples were collected using the CPT; however, CPT resistivity readings were used to evaluate lithology. Groundwater samples (DHP-S10B-01 through DHP-S10B-05 and DHP-S09-04) were collected from the SWBZ from CPT points, CPT-S10B-01 through CPT-S10B-05 and DPH-S09-04, using a Hydropunch sampling device."

Because no samples were collected (only resistivity readings), the points are not shown. They are depicted based on their groundwater sample labels (DHP-).

5. **Comment:** **<u>Page 9-7, first paragraph</u>: Portions of this paragraph are copied from the bottom of page 9-6 and do no make sense in the context presented here. What is the text supposed to say? Please revise.**

Response: No text is copied. The paragraph describes analyses performed on soil samples from several borings. A general description of results is included in the later portion of the paragraph. The paragraph is included below.

"Soil samples were collected from two soil borings (B10B-04 and B10B-06) and two monitoring wells (M10B-01 and M09-05) to further evaluate the vertical extent and nature of contamination in soil. Soil samples were collected at the surface, 2.5, and 5 feet bgs from each boring, except M10B-01, which was sampled at 1, 2, and 3 feet bgs. Samples from borings B10B-04 and B10B-06 were analyzed for SVOCs, VOCs, and general chemistry. Samples from boring M09-05 were analyzed for VOCs, metals, and general chemistry. Samples from boring M10B-01 were analyzed for VOCs, SVOCs, and purgeable and extractable TPH. SVOCs were detected at the southwest corner of Building 530 (B10B-06). Extractable TPH as motor oil was detected in soil samples collected at the north end of Building 530 (B10B-07) and the northwest corner of the building (M10B-01) (PRCEMI and MW 1995). Sampling locations are presented on Figure 9-3. Table 9-1 provides a summary of samples and analyses performed."

6. **Comment:** **<u>Section 9.2.2, Investigations Conducted Under the Installation Restoration Program, Page 9-7</u>: The detection of VOCs, SVOCs, and TPH in two storm drain sediment samples is described in this section. Please also include a discussion of the implications of these detections since the storm drain could be a preferential pathway for contaminant migration.**

Response: See the response to Global General Comment No. 1 on page 1. The draft final RI report will include a more detailed discussion of these results and their implications to the preferential pathway evaluation.

7. **Comment:** **<u>Section 9.2.2, Investigations Conducted Under the Installation Restoration Program, Page 9-9:</u> The 2001 storm sewer corridor sample contained elevated concentrations of TPH-related compounds, PAHs, and vinyl chloride. Please discuss the implications of these elevated concentrations with regard to whether the storm sewer bedding materials are acting as a preferential pathway for contaminant migration.**

Response: Except for vinyl chloride, concentrations detected in S23-DGS-VE01 are consistent with concentrations detected in groundwater samples from west of Building 530. A second vacuum extraction sample S23-DGS-VE02 was collected downgradient from VE01, and the results show that the vinyl chloride concentration was below the laboratory detection level of 1.0 µg/L and that petroleum products (benzene, naphthalene, ethylbenzene, and xylene) were not detected. These findings indicate that the bedding material is not acting as a preferential pathway for migration.

8. **Comment:** **<u>Page 9-11, Section 9.2.5:</u> Show removal action area on a figure.**

Response: The extraction wells and remediation area will be added to Figure 9-7.

9. **Comment:** **<u>Section 9.3.1, Potential Sources, Page 9-13</u>: Samples were collected in the vicinity of Building 529 and petroleum hydrocarbons were detected in soil and groundwater. Please discuss whether the samples were analyzed for other analytes since miscellaneous chemicals were stored at the site and could have spilled. Before the building is determined to not be a source under the CERCLA program, the absence of CERCLA-related contamination must be evaluated.**

Response: Monitoring well 530-MJ-MW-3 is located approximately 20 feet west-southwest of Building 529. No CERCLA VOCs or PAHs other than an estimated concentration of 1 µg/L of total 1,2-DCE was detected in this well. Metals analyses were not performed on groundwater samples from this well.

10. **Comment:** **<u>Section 9.3.1, Potential Sources, Page 9-13:</u> The text states that former Building 352 is not considered a source because no documented spills or releases are associated with the building, but it does not appear that samples were collected and analyzed for explosives. Please clarify whether any samples near the building were analyzed for contaminants related to explosives since the building was used to store explosives, and if not, discuss how this data gap will be addressed.**

Response: See the response to Site 23 General Comment No. 1 on page 71. All explosive material was packaged within warheads, and no explosive components were serviced at Site 23. The Navy does not believe a data gap exists.

11. **Comment:** **<u>Section 9.3.1, Potential Sources, Page 9-14:</u> Structure 561 is not considered a source because the transformer oil is believed to have contained less than 1 mg/L PCBs. Please explain how it can be known, with certainty, that the transformer oil never contained more than 1 mg/L PCBs, and if necessary, discuss how this potential data gap will be addressed.**

Response: The Navy will include information from a PCB sampling effort in the draft final RI report. The Navy does not believe that a data gap associated with the transformer exists.

12. **Comment:** **<u>Section 9.3.1, Potential Sources, Page 9-14:</u> The text states that the mini storage areas were not considered sources, but the text in Section 9.1.2 indicates that PCB oil was used for week control in the mini-storage area until 1963. Samples have not been collected from**

the mini-storage area, so it is unclear how the conclusion can be made that the storage areas are not sources of contamination. Please delete the statement that the mini-storage area is not a source area, discuss the potential for PCB contamination, and discuss how this data gap will be addressed.

Response: The Navy agrees that weed control in the mini-storage area is a potential source of soil contamination and is a data gap; however, much of the area is paved, thereby limiting the quantity of PCB oil that likely would have been used for weed control. The Navy proposes that areas not addressed during remediation of the TRW associated at Site 13 be sampled for PCBs during implementation phases of the FS.

13. **Comment:** **Page 9-14, first bullet: What information is used for the assertion that the transformer oil contained less than 1 mg/l PCBs and is therefore the transformer pad is not considered a source? Many transformer pads have been found to be sources of PCB contamination at other sites.**

Response: The transformer was labeled as containing less than 1 mg/L PCBs (see the response to Site 23 Specific Comment No. 11 above). Transformers containing PCB oil may be the source of PCB contamination. Transformer pads are concrete footings used to mount transformers, and if the transformers do not contain PCBs, then no source exists.

14. **Comment:** **Page 9-14, second bullet: OWS 529 and 530 need to be evaluated as sources of contamination.**

Response: See the response to Site 23 Specific Comment No. 2 on page 73.

15. **Comment:** **Section 9.3.2.1, Soil, Page 9-15: This section states that soil samples collected from petroleum saturated soil were not included in the risk assessment, so as a result the calculated risk cannot be considered to represent the total risk associated with this site. As discussed in the general comment above, this data should be included in the risk assessments. Please include this data in the risk assessments and delete the statements that data were not included in the risk assessments.**

Response: See the response to Site 23 General Comment No. 3 on page 70.

16. **Comment:** **Section 9.3.2.2, Groundwater, Page 9-17: This section states that groundwater samples collected from floating product areas were not included in the risk assessment so as a result the calculated risk**

cannot be considered to represent the total risk associated with Site 23. Please include this data in the risk assessment and delete the statement that data from the areas with floating product were not included in the risk assessment.

Response: See response to Site 23 General Comment #3 (page 70).

17. **Comment:** **<u>Section 9.3.2.2, Groundwater, Page 9-18:</u> It is unclear why tin was included in the groundwater analytical results summary table since samples were not analyzed for tin. Please explain why tin analyses were not conducted on groundwater samples, and if this is a data gap, discuss how it will be addressed.**

Response: As stated in several responses, these tables list compounds used at the site. Groundwater samples were not analyzed for tin because it was not detected in soil samples. The lack of tin in groundwater data does not reflect a data gap at Site 23.

18. **Comment:** **<u>Section 9.3.2.3, Soil Gas, Page 9-18</u>: The section on soil gas data is very brief and does not provide information regarding the results of the one soil gas sample collected. Please explain why one soil gas sample was considered sufficient to characterize soil gas and provide a description of the results of this sample. Also, please explain how the results can be used to characterize risk if the detection limits for many of the nondetected chemicals used at the site exceed EPA Region 9 residential PRGs.**

Response: See the response to Site 9 Specific Comment No. 12 on page 13.

19. **Comment:** **<u>Section 9.3.3, Site-Specific Conceptual Model, Pages 9-18 and 9-19 and Section 9.4, Nature and Extent of Chemicals in Soil and Groundwater, Page 9-20:</u> The site-specific conceptual model and discussion of chemicals used at Site 23 do not include the fact that PCB oils were used for weed control in the mini-storage area. Please include a discussion of this practice in the site-specific conceptual model and include PCBs in the list of chemicals used at Site 23.**

Response: The draft final RI report will be revised to include this information.

20. **Comment:** **<u>Section 9.3.4, Background Evaluations, Page 9-19:</u> This section states that only compounds that are considered to be present in concentrations greater than background conditions and identified in the risk assessment as COCs will be discussed in the nature extent section. All compounds that were present in concentrations or**

frequencies statistically greater than background should be discussed in the nature and extent section, regardless of whether they were identified as COCs in the risk assessment.

Response: See the response to Global General Comment No. 4 on page 7.

21. **Comment:** **<u>Page 9-20, Section 9.4:</u> What is the direction of groundwater flow? TCE and VC are near GAP 64**

Response: Under natural conditions, groundwater flows west. Currently, groundwater flows toward the extraction wells west of Building 530. Vinyl chloride was detected at S23-DGS-VE01, but the detection may be attributable to matrix interference caused by floating petroleum. Figure 9-7 shows that S23-DGS-VE01 is located within the petroleum plume.

TCE was detected in one sample collected from MW410-4, which is approximately 300 feet downgradient from GAP 64. TCE was detected at MW410-4 only once in October 1994 and is likely associated with releases from Site 9. Results for seven samples collected from MW410-4 since 1994 have been below the TCE detection limit. There is no reason to believe that GAP 64 contributed to groundwater contamination at Site 23.

22. **Comment:** **<u>Page 9-22, Section 9.4.2:</u> Where is vinyl chloride addressed?**

Response: Vinyl chloride was detected in 1 out of 102 samples analyzed for vinyl chloride; therefore, this compound is not discussed in the nature and extent text.

Samples were analyzed using EPA methods with detection limits that are as low as technically feasible in routine production laboratories. The samples collected at Site 23 were analyzed by CLP laboratories to the detection levels outlined by EPA protocol. Of the 102 samples analyzed for vinyl chloride, 93 had detection levels of 1 µg/L or lower.

Site 23 also has petroleum-related contamination that produces matrix problems because elevated concentrations of hydrocarbons require sample dilutions, resulting in elevated detection limits for vinyl chloride. Three samples have elevated detection levels (exceeding 50 µg/L) directly resulting from the petroleum contamination present at the site.

23. **Comment:** **<u>Section 9.5, Fate and Transport, Page 9-23:</u> The discussion regarding TRW in Soil at Site 23 notes that limited data are available at Site 23 to determine whether the material is moving in soil or not. In section 9.4.1, the text indicates that the extent of TRW beneath Site 23 is**

unknown. Additional sampling should be performed to determine the extent of TRW and whether it is mobile in Site 23 soil. Please discuss how this data gap will be addressed. Also, the large molecular weight hydrocarbons associated with the TRW may be soluble in water, but the text states that the TRW is not mobilizing in groundwater. Please provide additional justification for the statement that TRW is not mobilizing in groundwater.

Response: Additional sampling to assess the extent the TRW should be conducted during FS implementation. It is possible that TRW is mobile in groundwater. The text will be revised to reflect that TRW may be mobile in groundwater.

24. **Comment:** **Section 9.5, Fate and Transport, Page 9-23: The discussion about benzene and ethylbenzene in groundwater states that the decreasing concentrations of benzene and ethylbenzene at MW530-1 means that the compounds in the plume are degrading, but there is no discussion of natural attenuation parameters. Please discuss the implications of analyses for natural attenuation parameters and explain why these decreasing trends could not be due to other factors, such as migration or dilution.**

Response: Recent natural attenuation data are not available for this monitoring well. Because there has been much remedial action at this site (over 50,000 pounds of petroleum hydrocarbons have been removed since Winter 2003), the text will not be revised to discuss natural attenuation parameters.

25. **Comment:** **Figure 9-4, Site 23 Storm Sewer Condition: Figure 9-4 depicts a high priority damaged storm sewer line that is partially located on Site 13 to the east and partially on Site 23. Please include a discussion of this storm sewer line in the text.**

Response: See the response to Site 23 General Comment No. 1 on page 71 .

26. **Comment:** **Figure 9-7, Site 23 Total Petroleum Hydrocarbons in Groundwater: It is difficult to assess the extent of contamination from this figure because it does not include the analytical results upon which the 1,400 ug/l contour line was based. Please post the results next to each sampling point.**

Response: Appendix F of the RI report discusses the results in detail. The results will not be posted on Figure 9-7.

27. **Comment:** **<u>Table 9-4, Site 23 Statistical Summary of Groundwater Analyses:</u> The text on page 9-20 indicates that sec-butylbenzene was detected at a maximum concentration of 1,000 ug/L in MW-530-MJ-MW-1, but this compound appears to have been omitted from Table 9-4. Please include this compound and any others that were omitted in Table 9-4.**

Response: Sec-butylbenzene is shown on Page 5 of Table 9-4.

SUMMARY AND CONCLUSIONS

1. **Comment:** **<u>Section 10.1.2, Site 9 Groundwater, Page 10-2:</u> The text indicates that PAHs and PCP are not soluble in groundwater, but PCP is soluble in water and PAHs can be soluble in the presence of fuels or certain solvents. In addition, the text in Section 5.6.2 indicates that BaP is a risk driver in groundwater, so it is not appropriate to delete the risk associated with PAHs. It is unclear why the risk associated with PAHs and PCP was deleted. Please revise the risk assessment to include the risk associated with PAHs and PCP and delete the statement that PAHs and PCP are not soluble.**

Response: No risk was deleted. The incremental risk from PCP and PAHs were subtracted (based on the fact these compounds were detected in grab groundwater samples only) to show that an unacceptable risk is present from TCE and vinyl chloride alone. The site should be further evaluated during an FS. See the response to Site 9 Specific Comments No. 20 and 22 on pages 25 and 26.

2. **Comment:** **<u>Section 10.4.2, Site 23 Groundwater, Page 10-10: The</u> majority of the HI risk is said to be associated with ingestion of arsenic and thallium as well as inhalation of VOCs from groundwater, and the HI not related to arsenic and thallium in groundwater is 10. Please clarify whether the VOCs in groundwater that are the main cause of this noncarcinogenic risk will be addressed by the TPH program or if they are CERCLA chemicals that will not be addressed by the TPH program. If they will not be addressed by the TPH program, groundwater at Site 23 should be recommended for evaluation in an FS.**

Response: The text states the following: "Benzene, ethylbenzene, xylene, naphthalene, sec-butylbenzene, and trimethylbenzene are associated with TPH releases at Site 23 and are located primarily west of Building 530, in the former plane defueling area. The Navy is proceeding with remediation activity to address these compounds and TPH at Site 23 under the TPH program.

ERRATA

1. **Comment:** **<u>Section 1.2, Report Investigation, Page 1-2:</u> This section states that the document is presented in four volumes, but the draft appears to be presented in three volumes. Please revise this section to show that Volume I consists of the Executive Summary and Sections 1-11, Volume II consists of Appendices A-E, and Volume III consists of Appendices F-I.**

   Response: The text will be modified as requested.

2. **Comment:** **<u>Page 6-6, first sentence, top of the page:</u> This sentence doesn't fit with the previous one or the following one.**

   Response: The text will be modified as follows:

   "In situ corrective action of this area began in 2002, when a dual vacuum extraction (DVE) system was installed on the eastern side of Building 397. The purpose of the DVE system is to remove JP-5 free product. Remediation activities at Building 397 were suspended on September 17, 2003, after 1,148 pounds of TPH was removed."

3. **Comment:** **<u>Page 6-6, Section 6.2:</u> Delete the repetition of the phrase "as part of the TPH program".**

   Response: The text will be modified as requested.

4. **Comment:** **<u>Page 6-10, fourth paragraph</u>: Delete the redundant "Site 13" from the second sentence of this paragraph**

   Response: The text will be modified as requested.

5. **Comment:** **<u>Section 6.3.4, Background Evaluations, Page 6-24:</u> In the sentence that states that "concentrations of lead in soil at Site 9 are well above background concentrations," "Site 9" should be changed to read "Site 13".**

   Response: The text will be modified as requested.

6. **Comment:** **<u>Section 6.4.1, Nature and Extent of Chemicals in Soil, Page 6-25:</u> The phrase "(3) oil contaminated with jet fuel" should read "(3) soil contaminated with jet fuel".**

Response: The text will be modified as requested.

7. **Comment:** **<u>Section 6.4.2, Nature and Extent of Chemicals in Groundwater, Page 6-30:</u> In two separate instances on this page, AST 324 is referred to as AST 234. Please use the correct designator for this AST.**

Response: The text will be modified as requested.

8. **Comment:** **<u>Page 8-3, Section 8.2, first paragraph:</u> Delete the repeated phrase "as a part of the TPH program".**

Response: The text will be modified as requested.

9. **Comment:** **<u>Section 8.8, Conclusions and Recommendations, Page 8-27:</u> Former USTs 547-1 through 547-3 are referred to as former ASTs in this section. Please use the correct acronym.**

Response: The text will be modified as requested.

10. **Comment:** **<u>Appendix B, Soil Boring and Cone Penetrometer Logs:</u> Page 1 of the Soil Boring and Well Installation and Visual Classification Log for S09-DGS-DP02 is missing. Please ensure that this page is included in the final draft.**

Response: Page 1 of the boring log for S09-DGS-DP02 will be included in the draft final RI report.

11. **Comment:** **<u>Appendix B, Soil Boring and Cone Penetrometer Logs:</u> Several of the boring numbers cannot be read because a hole-punch has obscured them. In the final, please ensure that all boring numbers can be read.**

Response: The boring numbers will be readable in the draft final RI report.

12. **Comment:** **<u>Appendix B, Soil Boring and Cone Penetrometer Logs</u>: It appears that the boring logs for D04-01 and D10B-02 are not included in the section of Appendix B designated for Site 13 boring logs. Since these borings are included in Cross Section B-B' for Site 13, their boring logs should be included in this section of the appendix. Please add copies of the boring logs to the section of Appendix B designated for Site 13.**

Response: These borings will be included in the draft final RI report.

13. **Comment:** **<u>Appendix B, Soil Boring and Cone Penetrometer Logs:</u> It appears that the boring logs for D04-01 and P13-02 are not included in the section of Appendix B designated for Site 19 boring logs. Since these borings are included in the Cross Sections for Site 19, their boring logs should be included in this section of the appendix. Please add copies of the boring logs to the section of Appendix B designated for Site 19.**

Response: These boring logs will be included in the draft final RI report.

ECOLOGICAL RISK ASSESSMENT GENERAL COMMENTS

1. **Comment:** **The Ecological Risk Assessment (ERA) is referred to as a "modified BERA", in which site-specific assumptions were used. However, without first conducting a screening-level ecological risk assessment (SLERA) using all available data, it is not evident that a site-specific evaluation is warranted. The ERA doesn't appear to rely on the results of the cited 1999 ERA; instead, it appears that the current report consists of a new screening-level evaluation of data collected in order to fill data gaps identified in the 1999 report. Further, the use of less-conservative exposure assumptions in the report, such as lower chemical concentrations (i.e., 95 UCL or arithmetic mean) and effects-based toxicity values (i.e. Lowest-Observed-Adverse-Effects Levels) are not appropriate prior to a screening-level assessment in which chemicals of potential concern should be selected by comparing maximum chemical concentrations to chronic (i.e., No-Observed-Adverse-Effect) toxicity benchmarks.**

The current ERA is not acceptable because it does not follow the conservative screening process set forth in EPA Guidance. For example, the comparison to background concentrations is not appropriate as a screening step according to EPA policy, and the lack of sufficiently conservative exposure parameters in food chain modeling calls into question the results of the exposure assessment for wildlife receptors. The ERA should be revised to complete a SLERA (Steps 1 and 2 of 1997 EPA Guidance), in which all data is considered in a Scientific Management Decision Point (SMDP) and risk managers can decide whether further site-specific evaluation is warranted at any of the sites. The ERA should be revised to follow Steps 1 and 2 of EPA Guidance, incorporating conservative exposure assumptions.

Response: The modified screening-level ERA (SLERA) should be more acceptable because it provides an initial screening with sufficient information to support risk management decisions. SLERAs have been conducted at a number of similar sites at Alameda Point. In all cases, additional assessment of the sites was required either because of background

concentrations of metals, ambient concentrations of pesticides or PAHs, or site-specific contaminants. These sites currently have no significant ecological habitat, and future use is not anticipated to create significant habitat. The Navy decided to move the process forward and evaluate all sites and chemicals in the modified ERA, which uses more site-specific detailed information than is normally considered in a SLERA.

The use of 95 percent UCL concentrations is believed to be appropriate based on the robustness of the available data sets. The assertion that comparison to lowest observed adverse effects levels (LOAEL)-based toxicity data is inappropriate and misrepresents the actual assessment. The assessment used both no observed adverse effects level (NOAEL)- and LOAEL-based toxicity data to bound the range of risks for the risk managers.

2. **Comment:** **The ERA only evaluates exposure pathways for terrestrial receptors. However, it appears that the groundwater to surface water pathway at Sites 9, 13, and 23 should also be considered potentially complete. The earlier SLERA conducted for OU2 (Tetra Tech 1999) considers the groundwater to surface water pathway complete with regard to damaged storm sewers at these three sites. For example, VOCs and arsenic were detected in the vicinity of leaking storm sewer at Site 9, and Outfall J is located directly downgradient from this storm sewer line. Since it appears that leaking storm sewers provide a preferential pathway for contamination to migrate to surface water bodies, the groundwater to surface water pathway should be considered complete and should be evaluated in the ERA. Alternatively, please provide a clearer explanation for omitting an evaluation of potential aquatic receptors exposed to site-related contamination.**

Response: See the response to General Comment No. 1 on page 1. Additional detail will be provided to support the case that surface water is not impacted from OU-2A.

ECOLOGICAL RISK ASSESSMENT SPECIFIC COMMENTS

1. **Comment:** **<u>Section 3.6.7.1, Screening for Chemicals of Potential Ecological Concern, Page 3-30:</u> The text states that the ERA uses soil data from 0 to 4 ft bgs to select Chemicals of Potential Ecological Concern (COPECs) for OU-2A sites. However, the text in Section I.1.2 on page I-2 states that soil data from 0 to 6 ft bgs was used. Please clarify which depth interval was used to develop COPECs at each site.**

Response: The text in Section I.1.2 will be revised to reflect that soil from 0 to 4 feet bgs was assessed.

2. **Comment:** **<u>Section 3.6.7.1, Screening for Chemicals of Potential Ecological Concern, Page 3-30:</u> The text on page 3-30 says the aquatic receptor pathway was not considered complete for OU-2A sites. However, on page 3-35 the text states that chemicals detected in groundwater and retained as COPECs were further compared to saltwater criteria and evaluated for potential risk to marine receptors. Since it appears that leaking storm sewers provide a preferential pathway for contamination to migrate to surface water bodies, the groundwater to surface water pathway should be considered complete and should be evaluated in the ERA. Alternatively, please provide a clearer explanation for omitting an evaluation of potential aquatic receptors exposed to site-related contamination.**

Response: The text on page 3-30 will be revised to remove the reference to saltwater criteria and marine receptors.

3. **Comment:** **<u>Section 3.6.7.1, Screening for Chemicals of Potential Ecological Concern, Page 3-31, and Section I.1.2.1, Screening for Ecological Chemicals of Potential Concern, Page I-2:</u> The text lists four steps by which contaminants were screened in order to focus the ERA on chemicals that pose the greatest potential risk to receptors. The process includes frequency of detection, bioaccumulation potential, and a statistical comparison to background concentrations. These screening steps are not appropriate in the initial selection of COPECs. The SLERA should evaluate potential ecological risk by comparing the maximum detected concentrations of all chemicals to readily-available ecotoxicological screening benchmarks. Other factors that contribute to risk management decisions, such as frequency of detection, comparison to background, and bioaccumulation potential, can be discussed in the risk characterization after an initial conservative screening has been conducted. Please revise the ERA to remove frequency of detection, bioaccumulation potential, and comparison to background from the COPEC selection process.**

Response: This document is not a SLERA. Please see the response to Ecological Risk Assessment General Comment No. 1 on page 84. The Navy believes that the factors used to identify contaminants of potential ecological concern are appropriate and serve to eliminate chemicals that pose a negligible risk. EPA risk assessment guidance allows use of frequency of detection as a screening criterion. Comparison of inorganic constituents to background concentrations using rigorous statistical methods is an accepted methodology for eliminating inorganic chemicals that are representative of background conditions. Bioaccumulation potential was only used to retain organic chemicals that might otherwise have been eliminated because of low frequency of detection.

4. **Comment:** **<u>Section 3.6.7.5, Uncertainty, Page 3-35:</u> This section leads the reader to believe that a SLERA is overly conservative and possibly even that this modified ERA is overly conservative. The text states that the assumptions used in the ERA process are conservative and result in over-estimation of risk. This report does not incorporate conservative assumptions; in fact, the text repeatedly states that "realistic" assumptions are used. The uncertainties section should be revised to describe the sources of uncertainty associated with the assumptions used in this ERA that could lead to the underestimation of potential risk.**

Response: This ERA relies heavily on professional judgment to determine the uncertainty associated with information taken from the literature and any extrapolations used in developing a parameter to estimate exposures. The use of "realistic" assumptions in this modified ERA may be taken out of context in this section because the modified ERA still relies heavily on literature-derived information and extrapolations from the literature. Site-specific information could not be collected for this ERA because of the urban/industrial nature of the Alameda Point OU-2A sites; the lack of such information prevents a baseline ERA, which otherwise would be warranted for this OU as is discussed in Section I.1 of Appendix I. Many of the same uncertainty factors that would normally be associated with a SLERA are therefore still uncertainties in this modified ERA. It was not the Navy's intention to state that a SLERA is "overly conservative," rather that assumptions in the SLERA process are conservative and may result in overestimates of site-specific parameters. This modified ERA reduces the conservatism; however, without site-specific information, the uncertainty associated with the use of these literature-derived values is still present and needs to be considered during risk management decisions. The text in Section 3.6.7.5 will be modified to clarify this matter as appropriate to address both potential overestimates and underestimates of literature-based parameters used in the modified ERA approach.

5. **Comment:** **<u>Section 3.7, Approach Summary, Page 3-37:</u> The second to last paragraph includes decision criteria similar to a SMDP. The text states that if HQ values exceed 1.0, a chemical is further evaluated by criteria such as its frequency of detection and distribution, concentration range, absorption potential and toxicity to determine if it poses no or limited potential risk. This procedure is not acceptable as HQs exceeding 1.0 chemicals should not be further screened for elimination, but should be evaluated by the risk managers during the SMDP.**

Response: As indicated previously, this is a modified ERA that serves as a surrogate for the baseline ERA, which could not feasibly be conducted for the site; therefore, the methodology for this modified ERA follows EPA guidance

for baseline ERAs and SLERAs as well as Navy ERA guidance. Appendix I of the RI report presents this methodology and the results of the ERA. This ERA is not intended to determine if a baseline ERA is to be conducted; rather, it is intended as a document that could assist risk managers in risk management decisions. The further evaluation of hazard quotients (HQ) indicated in Section 3.7 is intended to provide further qualitative weight-of-evidence for the results of the quantitative HQ assessment and follows EPA ERA guidance as Step 7: Risk Characterization. The risk characterization section of an ERA should present both a qualitative and quantitative presentation of the risk results and associated uncertainties. The text in Section 3.7 will be modified to clarify this matter, and the weight-of-evidence approach will be added as an uncertainty of underestimating risk to ecological receptors in Section I.1.2.5 of the draft final RI report.

6. **Comment:** **<u>Section I.1.2.1, Screening for Ecological Chemicals of Potential Concern, Page I-2:</u> The text states that the 95 percent upper confidence limit (UCL 95) was used as the exposure point concentration (EPC) for most chemicals. However, in the absence of an extremely robust data set, the maximum concentration should be used as the EPC to select and evaluate chemicals of potential concern. The ERA should be revised to use the maximum detected concentration as the EPC.**

Response: A significant data set exists for all of the sites. During the preparation of the FSP for supplemental RI data gap sampling (Tetra Tech 2001), the Navy, DTSC, and EPA agreed that the proposed sampling for these sites would provide a sufficiently robust data set for all uses. This assessment is based on that data set. As described in Section H.1.2.1 of Appendix H, the adequacy of the data set was evaluated for each chemical at each site. Depending on the outcome of this evaluation, the maximum value detected or the 95 percent UCL concentration was used.

7. **Comment:** **<u>Section I.1.2.1, Screening for Ecological Chemicals of Potential Concerns, Page I-3:</u> The report does not provide appropriate citations for guidance documents. The text cites guidance documents issued by EPA and CA DTSC as justification for eliminating essential nutrients. Please provide the appropriate reference information for these documents.**

Response: The citation below will be added to the references listed in Appendix I and appropriately cited on page I-3 in Section I.1.2.1, Screening for Ecological Chemicals of Potential Concern.

EPA. 1989. "Risk Assessment Guidance for Superfund. Volume I: Human Health Evaluation Manual." Interim Final. Office of Emergency and Remedial Response. Washington, D.C. September 29.

Also, the citation of DTSC in the paragraph in Section I.1.2.1, Screening for Ecological Chemicals of Potential Concern, will be removed from the text.

8. **Comment:** **Section I.1.2.2.2, Evaluation of Chemical Fate and Transport, Page I-7: The report lacks sufficient detail to support the fate and transport assumptions incorporated into the ERA. In particular, the statement that exposure to surface water did not occur at OU-2A is not adequately supported. Please provide supporting evidence for this statement.**

Response: The map of the site shows no surface water at OU-2A. The description of the Navy's evaluation of the storm sewer system will be expanded in the draft final RI report to assist in supporting this claim.

9. **Comment:** **Section I.1.2.3.1, Development of Exposure Estimates, Page I-12: It is not appropriate to use average body weight and ingestion rates in a screening-level ERA. The text suggests that these exposure estimates are appropriate within the scope of a modified BERA. However, the ERA should follow Steps 1 and 2 of EPA Guidance, incorporating conservative assumptions such as minimum body weight, maximum ingestion rate, and 100% ingestion of the most contaminated food item. Please revise the ERA and risk calculations to incorporate conservative exposure assumptions.**

Response: See the response to Ecologic Risk Assessment General Comment No. 1 on page 84. The Navy believes that all assumptions used are appropriate for this assessment because this is a modified SLERA.

10. **Comment:** **Section I.1.2.3.1, Development of Exposure Estimates, Page I-14: The text explains that dietary composition was based on the percentages of dietary items as reported in the literature. Table I-16 lists the values for exposure factors for each receptor, but these exposure parameters are not appropriately conservative. According to 1997 EPA ERA Guidance, 100 percent of a receptor's diet should be assumed to consist of the most contaminated food item. Please revise the report to use the conservative exposure parameters appropriate to a SLERA.**

Response: See the response to Ecologic Risk Assessment General Comment No. 1 on page 84. The Navy believes that all assumptions used are appropriate for this assessment because this is a modified SLERA.

11. **Comment:** **<u>Section I.1.2.2.4, Development of Toxicity Reference Values for Soil, Page I-8:</u> Per California DTSC guidance, it is generally not appropriate to use a scaling factor for avian receptors unless the body weight of the test organism and the receptor differ by 2 orders of magnitude. Therefore, the document should be revised to use TRVs for avian receptors without the use of a scaling factor. Otherwise, complete technical rationale should be provided in the document to justify the use of a scaling factor for birds.**

Response: The use of a scaling factor for avian receptors was a Navy program management decision that follows the Navy Engineering Field Activity (EFA) West 1998 toxicity reference values (TRV) guidance; therefore, compliance with this comment is not possible without a program-level change that would apply to all Navy installations; however, the most current scaling factors will be used, and the text and tables will be altered to reflect these factors. The following allometric conversion equations will be used instead:

Birds: $TRV_{receptor} = TRV_{test\ organism} (BW_{test\ organism} / BW_{receptor})^{1 - 1.2}$

Mammals: $TRV_{receptor} = TRV_{test\ organism} (BW_{test\ organism} / BW_{receptor})^{1 - 0.94}$

These allometric conversion equations were developed by Sample and others (1998) and were used to extrapolate doses according to methods described by Opresko and others (1993) and Sample and Arenal (1999).

HUMAN HEALTH RISK ASSESSMENT GENERAL COMMENTS

1. **Comment:** **Further explanation is needed to justify the general statement that data collected from wells with floating product (light non-aqueous phase liquids or LNAPL) do not represent reasonable maximum exposure (RME) conditions.**

Response: The data were omitted because of the inherent uncertainty associated with data collected from floating product. Light nonaqueous-phase liquid (LNAPL) is considered a source subject to remediation. In addition, the presence of LNAPL in groundwater precludes the use of the Johnson and Ettinger model, which is the most standardized and recognized model to evaluate the vapor intrusion pathway. In each case in which floating product well data were left out of the risk assessments, the site was recommended for further evaluation (Site 13) under CERCLA, or was already under remedial action (active Sites 13 and 23 or planned Site 22);

therefore, the conclusions of the RI report would not have been altered by the inclusion of data from wells containing floating product.

2. **Comment:** **The methodology employed to screen chemicals detected in groundwater and soil gas from an evaluation of indoor air appears to be unnecessarily complex and subjective. Analytes where the maximum detected concentration in either groundwater or soil gas exceeded screening concentrations (either from EPA's vapor intrusion guidance or the RWQCB screening levels) should be quantitatively evaluated in the indoor air pathway. We do not concur with the averaging of data collected from either different locations or temporal differences from the same sampling location. The inclusion of these analytes would be consistent with EPA policy on risk characterization, which calls for a complete and open characterization of risk.**

Response: The advanced Tier 1 evaluation was conducted to determine whether the vapor intrusion pathway warrants inclusion in the risk assessment. The advanced Tier 1 evaluation included evaluating groundwater and soil gas concentrations at each site to provide a more accurate depiction of current groundwater conditions at OU-2A. Many of the exceedances of the Tier 1 screening criteria are based on older groundwater data and do not accurately reflect existing conditions. The evaluation of soil gas data in conjunction with groundwater data provides an additional line of evidence as to whether VOCs have migrated into the vadose zone and are likely to be of significance for the vapor intrusion pathway. Accordingly, the Navy believes the weight-of-evidence evaluation is an appropriate methodology to evaluate the vapor intrusion pathway based on current conditions at OU-2A.

3. **Comment:** **Greater detail should be provided in the sections that discuss calculation of the exposure point concentration, and all relevant equations and reference tables should be included (at a minimum, as an attachment) in the risk assessment. The Navy should recognize that Superfund risk assessments are part of the public record for each site. As such, all information required to review and verify the information and calculations presented in the risk assessments should be included.**

Response: The methodology used to calculate the EPCs is discussed in detail in Section 5.3 of the HHRA. The methodology is based on EPA's "Calculating Upper Confidence Limits for Exposure Point Concentrations at Hazardous Waste Sites," which is a public document. Accordingly, this information is not repeated in the HHRA.

4. **Comment:** **Consistent with EPA guidance (EPA, 1989) risk and hazard estimates should be presented to only one significant figure. Use of excessive**

significant figures also implies a greater degree of accuracy than is possible. Please revise the risk assessment to present risk and hazard estimates to one significant figure.

Response: More than one significant figure is presented in the HHRA to facilitate replication of the risk assessment calculations. This presentation is not intended to imply a greater degree of accuracy. The text will be revised to present risk and hazard estimates to one significant figure.

HUMAN HEALTH RISK ASSESSMENT SPECIFIC COMMENTS

1. **Comment:** **<u>Medium-Specific Data Reduction, Section 4.2, Page H-9:</u> The statement that data collected from areas contaminated with a non-aqueous phase and/or product sheen are not suitable for the risk assessment because they represent a hot-spot and continuing sources of contamination instead of site-wide "baseline" conditions is misleading. If no remedial response has taken place at the site, then concentrations at these areas, by definition, represent baseline conditions and are representative of potential exposures. Further, if these areas do represent a continuing source of contamination, it is reasonable to assume that concentrations may remain stable over an extended period. Failure to account for these elevated concentrations in the exposure assessment may result in a substantial underestimation of risk and hazard. The risk assessment should be revised such that all valid site data are included.**

   Response: See response to HHRA General Comment No. 1 on page 90 .

2. **Comment:** **<u>Frequency of Detection, Section 4.5.3, Page H-20:</u> EPA guidance no longer supports the elimination of chemicals from quantitative evaluation in risk assessments based on frequency of detection, as this process does not account for the inherent toxicity of a chemical. Risk-based screening methods are acceptable when the number of detected analytes is quite large. As a rule, EPA prefers to see a full and transparent characterization of exposure and associated health risks in the risk assessment. Chemicals that are detected infrequently but contribute substantially to site risk and hazard estimates can be discussed further in the risk characterization and associated uncertainty discussions to aid future risk management decision-making.**

   Response: As discussed in Section 4.5.3 of Appendix G, chemicals were not excluded as COPCs from the HHRA on the basis of frequency of detection alone. Chemicals with a detection frequency of less than 5 percent were only excluded as COPCs if the maximum detected concentration was

below the risk-based screening level. Additionally, risks associated with chemicals excluded as COPCs were evaluated based on comparison to the EPA Region IX PRGs. Section 7.5 of Appendix G presents the site-specific risk summaries.

3. **Comment:** **<u>Route-to-Route Extrapolation, Section 6.3, Page H-45:</u> The correct reference for determining the need to adjust oral toxicity values when evaluating dermal exposure is EPA, 2001, not the Region 9 PRGs as stated.**

Response: The text will be revised as requested in the comment.

4. **Comment:** **<u>Surrogates, Section 6.4, Pages H-46 to H-47:</u> Please clarify or revise the following and revise the calculations as appropriate:**

- **Clarify whether pyrene was uses a a surrogate when evaluating noncarcinogenic effects of phenanthrene and benzo(g,h,i)perylene.**

- **Clarify whether total chromium concentrations were evaluated by assuming 1/6 of the total is present as hexavalent chromium. Otherwise, there does not appear to be any surrogate value used here.**

- **Toluene is not an appropriate surrogate for 2,6-dinitrotoluene. Reference doses for 2,6-dinitrotoluene and cancer slope factors for dinitrotoluene mixtures should be used, as well as the Region 9 PRGs for 2,6-dinitrotoluene and dinitrotoluene mixtures. In addition, additional justification is needed for the use of phenol and 2-methylphenol as surrogates for 4-nitrophenol and 4,6-dinitro-2-methylphenol, respectively. The nitro group substitution acts as a very strong electron-withdrawing group, possibly resulting in substantial differences in rates of metabolism and metabolic end product. Given the uncertainties associated with using the suggested surrogates, further justification is needed. Alternately, these analytes may be evaluated qualitatively as they are not expected to contribute significantly to overall site risk and hazard, and to avoid the impression of a greater degree of accuracy in the quantitative evaluation than is possible.**

Response: The text will be revised as requested in the comment. Section 6.4 will be revised to indicate that the toxicity values of the surrogate chemicals were used to evaluate chemicals with no chemical-specific toxicity values. The text will also be revised to indicate that the total chromium toxicity values assume that hexavalent and trivalent chromium are present at a ratio of 1 to 6.

Additionally, the risk assessment will be revised to use the appropriate toxicity values for 2,6-dinitrotoluene. Chemicals without toxicity values for which no appropriate surrogate has been identified will be addressed qualitatively in Section 8.0 of Appendix G.

5. **Comment:** **<u>Characterization of Risk Results, Section 7.2, Page H-49:</u> The discussion in this section and in subsequent site-specific risk assessments of a specific risk management range conflicts with EPA Policy on risk characterization (EPA, 1995). In the site-specific risk assessments, delete the references to EPA's risk management range, as the role of the risk assessment is only to provide an unbiased estimate of exposure and associated health risks. The text on page I1-20 which discusses criteria for determining whether a site warrants further evaluation should be deleted from Appendix I and reserved for the conclusions of the report. In addition, it should be noted that unlike risk estimates, the estimates of noncarcinogenic hazard do not represent a probability. Rather, hazard estimates represent whether the reference dose will be exceeded based on the exposure assumptions.**

Response: The Navy agrees that the role of the risk assessment is to provide an unbiased estimate of exposure and associated health risks; however, the Navy does not agree that the discussion of the risk management range conflicts with EPA's "Guidance for Risk Characterization." As stated on page H-49 of the HHRA, the discussion of the risk management range is intended to aid in the interpretation of the results of the risk assessment. The text does not make definitive statements on the acceptability of the risk management range for protecting public health. In fact, the text specifically states that action may be warranted to address risks between 1 x 10^{-4} and 10^{-6}. Accordingly, the text will not be revised in response to this comment.

6. **Comment:** **<u>Uncertainty in Data Reduction Process, Section 8.1, Page H-80:</u> Revise the text in this section, which incorrectly states that chemicals detected at concentrations less than PRGs are unlikely to be site related. The concentration of a particular analyte relative to its PRG provides no information whether it is present as a result of site operations.**

Response: The Navy agrees that the concentration of a chemical to its PRG and accordingly, the risk posed by the chemical, is independent of whether or not it is related to site operations. The text will be revised as follows:

"It is unlikely that chemicals eliminated from the risk assessment would have posed a health risk of significance."

7. **Comment:** **<u>Uncertainty in Particulate Emission Factor Approach, Section 8.2.4.2, Page H-83:</u> The text states that the default particulate emission factor (PEF) used by Region 9 is based on bare soil. In fact, the default values of 1.316E9 is based on an assumption that 50 percent of the site is covered by vegetation. Please correct the PEF statement.**

Response: The paragraph will be replaced with the text below.

"The default PEF recommended by Region 9 is based on a vegetated soil cover of 50 percent and may overestimate COPC concentrations in outdoor air, particularly for sites where soil is covered by lawns or other vegetative ground cover. Lawns or other vegetative ground cover significantly reduce the amount of dust and suspended particulate matter escaping from the underlying soil."

8. **Comment:** **<u>Arsenic Toxicity, Section 8.3.3, Page H-86</u>: Correct the text in this section that incorrectly describes a "controversy" regarding the Region 9 PRG for arsenic that has resulted in EPA either using a screening level of 10^{-5} or one based on noncarcinogenic effects. In fact, the reason for allowing alternate screening levels for arsenic in soil is a result of the fact that the PRG for arsenic based on a cancer endpoint is less than typical naturally-occurring levels, and that EPA does not require cleanup to less than naturally occurring levels and that the PRG for arsenic based on noncancer effects still falls within the range of concentrations (0.39 to 39 mg/kg) that equates to the risk management range of 10^{-6} to 10^{-4}. In addition, no information is provided in the subsequent discussion that relates the relative absorption of arsenic in soil to arsenic in solution. Given that EPA toxicity criteria for arsenic represent external rather than internal doses, the discussion of the bioavailability of arsenic in soil is without proper context and should either be supplanted with additional information or deleted.**

Response: The Navy agrees that the risk from arsenic in background soils lies within the risk management range. Furthermore, the Navy agrees that the management and screening of arsenic at the 1×10^{-5} risk level is based on the fact that arsenic occurs naturally in soil at concentrations corresponding to the risk range. The text will be revised in response to this comment.

The text discussing the bioavailability of arsenic is intended to discuss the uncertainties regarding arsenic bioavailability in soils. As discussed in Section 8.3.3, studies have shown that arsenic in soil is likely to be absorbed to a lesser degree than arsenic in solution. Because the oral slope factor is based on ingestion of arsenic in water, it is possible that

exposure to an equivalent dose of arsenic in water and soil would result in a lower cancer risk from the soil medium. This portion of the text will not be revised in response to this comment.

9. **Comment:** **<u>Values Used for Daily Intake RME Soil Exposures, Table H-4.1:</u> The PEF used in this analysis is identical to that used in residential and typical occupational exposures, and addresses only dust particles arising due to wind erosion. It does not address dust generated via intrusive operations or vehicular traffic. A methodology for developing a PEF for assessing inhalation exposures reflective of a construction or utility worker may be found in the Supplemental Guidance for Developing Soil Screening Levels (EPA, 2001). As exposure via inhalation of airborne particulates may be substantially greater using this methodology, risk and hazard estimates for the construction worker receptors should be revised.**

Response: Development of a site-specific PEF for construction workers is not warranted. According to the EPA's "Supplemental Guidance for Developing Soil Screening Levels," vehicle traffic on unpaved roads accounts for most emissions during construction activities. Future construction activities at OU-2A would likely require dust control measures as part of project-required mitigation under the California Environmental Quality Act (CEQA), as required by the Bay Area Air Quality Management District. Accordingly, it is not likely that construction workers would be exposed to significantly higher levels of particulates than the other receptors evaluated.

References

EDAW, Inc. 1996. NAS Alameda Community Reuse Plan, January 31.

Tetra Tech EM Inc. (Tetra Tech). 2001. "Final Field Sampling Plan Supplemental Remedial Investigation Data Gap Sampling for Operable Units 1 and 2." June 14.

U.S. Environmental Protection Agency (EPA). 1988. "Guidance for Conducting Remedial Investigations and Feasibility Studies Under CERCLA." EPA/540/G-89/004.

EDAW, Inc. 1996. NAS Alameda Community Reuse Plan, January 31.

EPA. 1989. "Risk Assessment Guidance for Superfund, Volume I, Human Health Evaluation Manual, Interim Final." Office of Emergency and Remedial Response. (EPA/540/1-89/002).

EPA. 1993. Data Quality Objectives Process for Superfund Interim Final Guidance. September.

EPA, 1995. "Policy for Risk Characterization." Office of the Administrator.

EPA. 2001. "Risk Assessment Guidance for Superfund, Volume 1: Human Health Evaluation Manual. Part E, Supplemental Guidance for Dermal Risk Assessment." Office of Solid Waste and Emergency Response. EPA/540/R/99/005

EPA. 2000. Guidance for the Data Quality Objective Process. EPA QA/G-4. http://www.epa.gov/quality1/qs-docs/g4-final.pdf August

RESPONSES TO DTSC GSU COMMENTS ON THE DRAFT OU-2A REMEDIAL INVESTIGATION REPORT, SITES 9, 13, 19, 22, AND 23 ALAMEDA POINT, CALIFORNIA, FEBRUARY 26, 2004

This document presents the U.S. Department of the Navy's (Navy) responses to comments from the California Department of Toxic Substances Control (DTSC) Northern California Geologic Services Unit (GSU) on the "Draft OU-2A Remedial Investigation Report, Sites 9, 13, 19, 22, and 23, Alameda Point, Alameda, California," dated February 26, 2004. The Navy received the comments addressed below from DTSC on June 11, 2004.

GENERAL COMMENTS

1. **Comment:** **In the site specific sections for <u>Investigation Conducted Under the IR Program</u>, (5.2.2., 6.2.2., 7.2.2., 8.2.2., and 9.2.2.) the subsection on Storm Sewer Investigation, 2000, discusses a base-wide evaluation of the condition of storm sewers. An explanation must be provided for why the sanitary sewers have not been investigated in a similar manner. In many cases, the soil, soil gas, and groundwater around large segments of both types of sewers have not been investigated. A comprehensive investigation of all storm and sanitary sewers, and potentially leaky water supply lines throughout OU-2A must be conducted as pointed out in many comments in the following memo. <u>The Storm Sewer Investigation, 2000</u> report should be provided for review as an appendix. In addition, please provide the status of agency concurrence with this document.**

   Response: The discussion of the storm sewer evaluations will be expanded. The remedial investigation (RI) report already discusses sewer cleaning and replacement activity; however, more detail will be added to the draft final document. The storm sewers are not a continuing source of groundwater contamination because they have not been used for industrial waste disposal since 1972 and were cleaned in 1991, 1995, and 1997.

   The Navy is unclear why DTSC would request that "leaky water lines" be evaluated. Although a leaking water line may affect the migration of groundwater, it is not considered a source of groundwater contamination.

2. **Comment:** **In many cases, it is stated in this RI that no further investigation is needed near Aboveground Storage Tanks (ASTs), Generator Accumulation Points (GAPs), Oil Water Separators (OWSs), catch basin, Total Petroleum Hydrocarbon (TPH) plume, etc. because no CERCLA chemicals were present. In all cases where this justification is used, adequate documentation must be provided to prove that analyses were conducted for chlorinated volatile organic**

contaminants (VOCs), metals, polychlorinated biphenyls (PCBs), and pesticides to ensure an AST, GAP, OWS, catch basin, TPH plume, etc. contained only releases of TPH.

Response: Figures that depict soil and groundwater sampling locations according to analytical group will be included in the draft final RI report. These figures demonstrate that the sites have been adequately characterized.

3. **Comment:** **There is a persistent problem with laboratory detection limits that are greater than the U.S. EPA Region 9 residential Preliminary Remediation Goals (rPRGs) or tap water PRGs. The problem appears to be more critical with respect to groundwater data. Each site specific <u>Analytical Data Evaluation</u> (Sections 5.3.2., 6.3.2., 7.3.2., 8.3.2., and 9.3.2.) for soil, groundwater, and soil gas should expand the discussion concerning laboratory detection limits that are greater than the PRGs. The discussion should point out the variety of reasons that may exist to explain why many detection limits are greater than PRGs, and how this impacts the evaluation of the data, particularly with respect to those compounds that the Navy is reporting as non-detect (ND). As currently presented, the lateral and vertical extent of certain chemicals in groundwater may not have been adequately characterized for risk assessment purposes. A justification should be provided about why these data are appropriate for use in an RI.**

Response: The Navy disagrees that there is a persistent problem with detection limits greater than preliminary remediation goals (PRG). Typically, detection limits greater than PRGs would be a concern for risk assessment purposes; however, the risk assessment included with this RI report used a statistical technique to derive conservative exposure point concentrations (EPC) from data that included elevated detection limits. Appendices E and G of the RI report provide EPC calculation details.

Detection limits are used to assess the presence or absence of a compound, and PRGs are used to identify areas where chemical concentrations may pose potential risk to human health or the environment. The data quality objectives (DQO) for the various investigations included in the RI report required that detection limits meet the Contract Laboratory Program (CLP) standards, and for some of the investigations, detection limits were set using maximum contaminant levels (MCL) or PRGs so that potential risk areas could be identified and thoroughly investigated; however, the PRGs for some chemicals are lower than the detection limits achievable by modern laboratories, and the PRGs for other chemicals have been reduced to levels that are now below the detection limits used when a given site was investigated. (The Navy, Base Realignment and Closure Act [BRAC] Cleanup Team [BCT], and regulatory risk assessors have

indicated that historic soil and groundwater data are acceptable to characterize risk and the nature and extent of contamination at Alameda Point). It therefore cannot be demonstrated that some, or occasionally all, nondetections of a given chemical are below the respective PRG. For these chemicals, the Navy included all of the data in the risk assessment if at least one result exceeded the detection limit (and thus was actually "detected" at the site) except for toxaphene (see the Navy response to U.S. Environmental Protect Agency [EPA] Global General Comment No. 4 on page 7). For other chemicals not "detected" at the site, the Navy used other information to determine if there was a realistic possibility that the chemical could have been used or released at the site. If such possibility existed, the Navy included the chemical in the risk assessment using the methods described near the end of this response; if not, the chemical was excluded from the risk assessment.

Most environmental samples whose results were used in the RI report and risk assessments were analyzed using standard EPA methods (such as SW-846 or CLP methods). Detection limits exceeding current PRGs result from the use of data collected over 10 years ago, the evolution of lower detection limits as technology improves, the revision of PRGs over time (such PRGs are not always technologically feasible), and matrix interference. Of these, only matrix interference should give rise to concern that a chemical contaminant might be disregarded. In addition, not all detection limits for the investigations were set to be below PRGs. For example, for groundwater data collected during the basewide groundwater monitoring investigations, reporting limits were compared to MCLs. Reporting limits for soil gas samples were not compared to PRGs according to the field sampling plan (FSP) for the supplemental RI data gap sampling investigation (Tetra Tech 2001), and the RI report states that regulatory limits, such as PRGs for ambient air, are not applicable.

In the draft final RI report, detection limits will be more thoroughly addressed and more attention will be given to conditions that may have resulted in less than optimal analytical conditions and the outcome in terms of data assessment.

4. Comments - Analytical Data Evaluation (Sections 5.3.2., 6.3.2., 7.3.2., 8.3.2., and 9.3.2.).

(A) The method used to collect soil samples for VOCs should be identified in each site specific section for <u>Analytical Data Evaluation, Soil</u> (5.3.2.1, 6.3.2.1, 7.3.2.1, 8.3.2.1, and 9.3.2.1). If soil samples for VOCs were NOT collected using an Encore type sampler (U.S. EPA Method 5035), the characterization of VOCs in soil may be inadequate for risk assessment.

Response: EPA Method SW 846-5035 was not written until December 1996. Much of the soil data used in this RI report was collected prior to when this method was prepared. Previous agreements with the BCT allowed for the use of older soil data for risk assessment and site characterization purposes.

(B) **It is stated in the 2nd paragraph of each site specific section for <u>Analytical Data Evaluation, Soil</u> (5.3.2.1, 6.3.2.1, 7.3.2.1, 8.3.2.1, and 9.3.2.1) that a subset of the soil data was selected for use in the risk assessments. Data were considered appropriate for use if they were validated, consistent with the DQOs, and reflected current site conditions. At this time, the GSU is unable to determine if soil data for all sites are representative of current site conditions with respect to the geologic and hydrogeologic characterization, and risk assessment. The spatial distribution of soil sample locations and depths for each chemical group relative to industrial and physical site features must be presented. Then, an evaluation can be conducted to determine if soil characterization is adequate to conduct a risk assessment.**

Response: Figures presenting the sampling locations by analytical group will be provided in the draft final RI report.

(C) **The site specific sections for both the soil and groundwater subsections contain summary tables called *Analytical Results for Chemicals Used at Site 9, 13, 19, 22, and 23*. It is stated in the text that these tables represent only those chemicals "*believed to have been used*" at the site. This statement could be misunderstood to imply that only these chemicals were retained for further evaluation, and other chemicals may have been eliminated from consideration for soil risk because they were not believed to be related to past site activities. A list should be provided of all identified Contaminants of Potential Concern (COPCs) as defined by the CERCLA process. All COPCs should be retained for further evaluation through the risk assessment process, then eliminated or further evaluated. The GSU does not believe that only evaluating chemicals believed to have been used at the site is compatible with DTSC policy and with future community and residential reuse plans for many areas at Alameda Point. From the geologic and hydrogeologic characterization perspective, if the presence of a chemical at elevated levels is clearly documented, and the risk assessment determines a risk is present, then the chemical should be further evaluated in a feasibility study (FS), especially if a risk is present for future community and residential activities.**

Response: Although it is possible to interpret the text this way, Section 3 of the report states clearly that all compounds were evaluated in the human health risk assessment (HHRA). The intention of these tables is to demonstrate that the Navy evaluated every chemical in the HHRA and further evaluated every chemical believed to have been used at the site even if it was not identified as a risk driver. All chemicals analyzed for were evaluated for their potential to pose risk.

(D) **It is stated in the 2nd paragraph of each site specific section for <u>Analytical Data Evaluation, Groundwater</u> (5.3.2.2, 6.3.2.2, 7.3.2.2, 8.3.2.2, and 9.3.2.2) that a subset of the groundwater data was selected for use in the risk assessments. Data were considered appropriate for use if they were validated, consistent with the DQOs, and were representative of current site conditions. At this time, the GSU is uncertain if groundwater data are representative of current site conditions, with respect to geologic and hydrogeologic characterization, and risk assessment. The spatial distribution of groundwater sample locations and depths for each chemical group relative to industrial physical site features must be presented. Also, the issue concerning numerous detection limits greater than the PRGs must be resolved, particularly for chlorinated VOCs, like tetrachloroethene (PCE), trichloroethene (TCE), 1,2-dichloroethene (1,2-DCE), vinyl chloride, 1,2-dichloroethane (1,2-DCA), and for other contaminants like benzene and methyl tert-butyl ether (MTBE). Then, an evaluation can be conducted to determine if groundwater characterization is adequate to conduct a risk assessment. As the data is currently presented, it is difficult (or nearly impossible) to determine if the lateral and vertical extent of chemicals in groundwater have been adequately characterized in the First Water Bearing Zone (FWBZ) and Second Water Bearing Zone (SWBZ).**

Response: Figures presenting the sampling locations by analytical group will be provided in the draft final RI report.

(E) **In the site specific sections for <u>Analytical Data Evaluation, Soil Gas</u> (5.3.2.3, 6.3.2.3, 7.3.2.3, 8.3.2.3, and 9.3.2.3) it is clear that a minimal amount of soil gas sampling has been conducted, which is inadequate to adequately characterize the vadose zone beneath OU-2A. At Sites 9, 13, and 23, one soil gas sample was collected; at Site 19, no samples were collected; and at Site 22, two samples were collected. Additional soil gas sampling must be conducted to characterize the variety of past industrial activities and waste disposal practices that were conducted at these sites, not just near the location of the maximum VOC concentration in groundwater. Likely future reuses for all five sites include residential scenarios. Therefore, at each site, a gridded soil gas sampling plan should be developed and implemented to**

investigate soil gas along all current and former storm sewer lines, sanitary sewer lines, potentially leaky water supply lines, OWSs, catch basins, present or removed ASTs and USTs, and any other industrial or cultural features that may have contributed to disposal, spills, or leaks of solid or liquid industrial waste. Because the detection limits for many of the chemical reported as non-detect exceeded the PRGs, the data may be insufficient to characterize the vadose zone and be used in an indoor air risk assessment. Relying on groundwater data to evaluate indoor air risk will not be adequate for risk assessment. At a minimum, soil gas samples must be collected directly beneath buildings that will continue to be occupied for any reuse activity. If it is technically impossible to collect soil gas data, the problems associated with that location should be fully documented and justified.

Response: As stated in the RI report, soil gas data were collected to evaluate the risk from the vapor inhalation pathway. Soil gas data were not collected to characterize the site for nature and extent purposes. This approach is consistent with the objectives presented in the final FSP for supplemental RI data gap sampling for Operable Unit (OU)-1 and OU-2 dated June 2001, which was approved by the agencies. The BCT (including DTSC's risk assessors) participated in the sampling location selection process and approved the work plan that outlined the DQOs for each sample. At the time of data collection, DTSC was aware of the laboratory detection limits and the plan for use of the data. Additional soil gas data will not be collected or used to characterize source areas.

5. **Comment:** **In the site specific <u>Background Evaluations</u> sections (5.3.4, 6.3.4, 7.3.4, 8.3.4, and 9.3.4), manganese is found to be significantly elevated over background in groundwater. However, because manganese is believed to be "not associated with site activity," the nature, extent, and risk are not evaluated. Regardless of whether manganese is associated with past site activity, it is concentrated in the Bay Sediment Unit (BSU) and marsh crust. It should be evaluated for human health and ecological risk, and it should be further evaluated in an FS. Then, a risk management decision can be made about eliminating manganese from further consideration.**

Response: The HHRA and ecological risk assessment (ERA) evaluate manganese. The RI document identifies it as a risk driver on pages 5-34, 6-35, 6-45, 7-21, 7-29, 8-22, and 8-31 of the draft report. The nature and extent of manganese is discussed in each background evaluation. The fact that there is no documented use of manganese is part of the evaluation of the nature of the compound. There is no evidence to suggest that manganese is associated with past site activity; it is concentrated in the Bay Sediment Unit (BSU) and marsh crust. The RI identifies the presence of reducing

conditions at the site that may contribute to the presence of manganese. Manganese will be discussed in the feasibility study (FS) report.

6. **Comment:** **<u>Nature and Extent of Chemicals in soil and groundwater - Sections (5.4, 6.4, 7.4, 8.4, and 9.4).</u> It is stated in each site section that only chemicals posing a risk are discussed further in the section, if (unless) they relate to past site activities. This approach is unacceptable. If a chemical poses a risk, then it must be further evaluated, and should be discussed in the nature and extent discussion.**

Response: The text has been revised to read as follows: "Only chemicals that pose risk to human health or the environment (see Appendices H and I) or relate to past site activity are discussed in this section."

7. **Comments:** **Fate and Transport. Sections (5.5, 6.5, 7.5, 8.5, and 9.5)**

(A) **In the general discussion of <u>Fate and Transport</u>, there is no mention of the construction of a groundwater flow model upon which fate and transport discussions for groundwater can be built. The Navy should explain why a basic flow model has not been constructed for OU-2A, and how the transport of groundwater contaminants can be assessed without a thorough understanding of groundwater flow, at least in the FWBZ.**

Response: The fate and transport sections attempt to describe (1) potential routes of migration for chemicals detected in site soils and groundwater; (2) factors that may affect contaminant persistence in soil and groundwater; and (3) factors affecting contaminant migration with respect to their movement in groundwater. Given the complexities of groundwater flow patterns in the first water-bearing zone (FWBZ), a best effort has been made to determine general direction of groundwater flow to determine which direction contaminant plumes (if any) would most likely expand. The purpose of the RI was to characterize nature and extent of chemicals of concern (COC) in soil and groundwater. A more detailed fate and transport evaluation, including fate and transport modeling, will be conducted during the FS.

(B) **In the site specific <u>Fate and Transport</u> sections (5.5, 6.5, 7.5, 8.5, and 9.5), general, non-detailed statements are found concerning residual VOC concentrations that are expected to decrease further or be addressed by natural attenuation processes. All current and future discussions about the possible occurrence of natural attenuation should be supported by a rigorous demonstration of natural attenuation. This demonstration must provide multiple lines of evidence shown by chemical data from repetitive groundwater monitoring and/or repetitive soil sampling events, and graphical displays as described below. Statements made in the Fate and Transport sections of this report that suggest the possible occurrence**

of natural attenuation, must be justified in this manner. The multiple lines of evidence must prove that degradation pathways result in harmless end products. Multiple lines of evidence should include, but not be limited to:

a. Documentation of *Sequential Degradation and Loss of Contaminants* as shown by concentration trends, plume geometry, plume lengths vs expected lengths, and/or mass balance calculations;

b. Documentation of the *Presence of Geochemical and Inorganic Indicators of Contaminant Degradation* as shown by temperature, pH, conductivity, dissolved oxygen, oxidation-reduction potential, sulfate/sulfide, nitrate/nitrite, ferrous iron, ethene, ethane, methane, carbon dioxide, and/or chloride; and

c. Documentation of *Microbial Evidence*, such as anaerobic and aerobic heterotrophs and degraders (if present), and/or inorganic reducers.

The demonstration of natural attenuation has not yet been attempted for any of the sites at OU-2A. However, if natural attenuation for VOCs becomes a consideration for a future remedial alternative, this is the kind of data that must be compiled to support the occurrence of natural attenuation.

Response: The Navy will conduct these analyses, if needed, during the FS.

(C) **In the site specific sections, discussion must be provided about preferential pathways present, such as hydrogeologic features, and sewer, water, and utilities lines.**

Response: The draft final RI report will include an expanded discussion of storm sewer evaluations at each site.

8. Comment: **<u>Executive Summary</u>. At the end of the 2nd paragraph, it is stated that the phased approach to this RI afforded stakeholders opportunity to provide feedback on the suitability or adequacy of data collected, and the need to collect additional data. This statement could be understood to imply that there is no need to collect any additional data, or stakeholders had their chance to identify any data gaps. Because this is a draft document, there is still ample opportunity to identify data gaps and require additional collection of data if deemed technically necessary. This statement should be qualified or removed.**

Response: The biased and phased sampling approach was conducted over a period of greater than 10 years, with agency oversight and approval. This approach afforded stakeholders opportunities to provide feedback on the suitability or adequacy of the sampling plans, data collected, and the need to collect additional data to identify releases and complete the RI report. Risk and the vertical and horizontal extent of contamination have been characterized sufficiently to make decisions for the sites within OU-2A. All of the sites within OU-2A are recommended for further evaluation during the FS. The draft document and associated schedules would not allow for additional sampling.

9. **Comment:** **<u>Executive Summary</u>. It is stated in the 4th paragraph (page ES-2) that the objectives of the nature and extent evaluation are to (1) present the concentrations of chemicals believed to have been used at the site, and (2) provide detailed evaluation of the risk drivers. Providing detailed evaluation of only those chemicals considered to be risk drivers will neglect other chemicals present that should be receive a detailed evaluation of the lateral and vertical extent. All COPCs should be evaluated for each site.**

Response: The Navy disagrees with this comment. The National Oil and Hazardous Substances Pollution Contingency Plan (NCP) and EPA guidance (EPA 1988) state that the RI should discuss the nature and extent of risks posed by hazardous substances. According to the NCP, in characterizing the site, the lead agency shall characterize the nature and threat posed by the hazardous substances and hazardous materials and gather data necessary to assess the extent to which the release poses a threat to human health and the environment (Title 40 of the *Code of Federal Regulations* [CFR] 300.430 [d][2]). In developing its guidance for the RI/FS process, EPA (1988) declared that the purpose of the RI/FS process is to characterize the nature and extent of risks posed by uncontrolled hazardous waste sites and for evaluating potential remedial options. It appears that the statute and guidance intend that the RI would serve to identify the nature and extent of "contamination," which is defined by the risk assessments; therefore, the RI report should focus on hazardous substances that pose risk (as defined by the risk assessment, not by comparison with PRGs).

The nature and extent sections discuss the types and concentrations of all chemicals identified as risk drivers and of other chemicals believed to have been used at the sites, even chemicals detected below PRGs. The risk assessments are used to focus more detailed discussions. Because the risk assessment results reflect the best estimate of risk based on current site conditions, it is more appropriate to use these results to focus nature and extent discussions rather than the results of comparisons between site data and PRGs.

10. **Comment:** <u>Executive Summary</u>. **It is stated in the 5th paragraph that although the residential scenario was not considered a primary exposure scenario, it was evaluated anyway. However, it is stated in each site specific section that the reuse plans include commercial/industrial and residential scenarios as the most likely future uses. This statement should be clarified or modified to fit better with the site specific descriptions of likely future uses.**

Response: The Navy believes that the text is clear as written. The executive summary states the following: "Although the residential exposure scenario was not considered a primary exposure scenario, it was evaluated anyway to allow flexibility in implementing the reuse plan (or modifications thereto) and for evaluation of potential remedial alternatives at Alameda Point, and because EPA risk assessment guidance (1989) includes a strong preference for evaluation of the residential pathway."

The conceptual site model (CSM) in each section states the following: "According to reuse plans for Alameda Point, commercial/industrial human exposure scenarios are the most likely future exposure at Site XX."

Section 3.6.6 of the RI states the following: "According to reuse plans for Alameda Point, commercial/industrial exposure scenarios are the most likely future exposures at Sites 9, 13, 19, 22, and 23."

Section 5.6 states the following: "As noted in Section 3.6.6, the following receptors were evaluated in the HHRA: current/future commercial/industrial worker; future construction worker; future hypothetical resident; future construction worker intrusive exposure scenario; and future hypothetical resident intrusive exposure scenario."

Inclusion of the word "hypothetical" before "resident" is intended to convey that residential use is less likely at OU-2A, but it is evaluated to allow flexibility in implementing the reuse plan (or modifications thereto). The text will not be revised.

11. **Comment:** <u>Executive Summary</u>. **In the 5th paragraph, a brief summary is provided of the process used to exclude chemicals as COPCs. A more complete summary of the process used for identifying COPCs, determining final contaminants of concern (COCs), and selecting risk drivers should be provided. A summary table should be added to each site discussion to clarify discussion of COPCs, COCs, and risk drivers. This table should include, but not be limited to, a list of chemicals detected above regulatory threshold values or found to be statistically different from background, range of concentrations, frequency of detection, the screening values used for comparison to**

regulatory criteria, number of laboratory detection limits greater than the PRG or other approved regulatory criteria used for screening, those chemicals identified as COPCs, why a chemical is retained or eliminated as a COPC, those chemicals selected as COCs and why, those chemicals identified as risk drivers, and finally, those chemicals for which characterization data is presented and further evaluation through the risk assessment process is conducted.

Response: The intent of the executive summary is to summarize the general approach and conclusions and not to discuss exactly how the RI was conducted. These details are presented in the main body of the report and in the appendices. The Navy will not provide the level of detailed requested by DTSC in the executive summary because the summary would then be too lengthy for a summary.

The selection of chemicals of potential concern (COPC), chemicals of potential ecological concern (COPEC), risk drivers, and COCs is described in Section 3.0, Remedial Investigation Approach, and is consistent with EPA guidance; however, the terms COPC, COPEC, and COC will be introduced in the beginning of Section 3.5, Data Evaluation Methods. "Risk driver" is already defined in this text as a chemical that demonstrates significant risk to human health or the environment. "Risk driver" will be further defined in the draft final report as a chemical with a cancer risk above 1×10^{-6} or a hazard index (HI) above 1, or as a chemical that results in an ecological risk considered to be significant or that could not be discounted. In the draft RI report, the COPC selection is presented in Section 3.5.5.2, the COPEC selection in Section 3.5.6.1, and the selection of COCs in Section 3.6.

12. Comment: **<u>Executive Summary</u>. At the end of the Executive Summary (ES) a table should be provided to summarize the recommendations for each site and each media.**

Response: The draft final RI report will be revised to provide the recommendations in table format requested.

13. Comment: **<u>Section 2.3.2.3 – Groundwater Flow</u>. In the 2nd paragraph, several water table surface features are described; mounding of groundwater north of Seaplane Lagoon due to a sheet pile wall; preferential flow paths around storm drains, underground utility structures, and near industrial buildings; and tidal influence on groundwater flow in the area. All features affecting groundwater flow, and potentially contaminant transport, must be shown on recent groundwater surface elevation maps. In particular, the presence or absence of tidal influence on the water table surface beneath OU-2A, not just general**

areas of tidal influence at Alameda Point, must be documented. Without this information, the direction and gradient of groundwater flow can not be calculated, the direction and velocity of contaminant transport can not be evaluated, and risk can not be adequately assessed. Also, the discussion of vertical gradients in Section 4.2.4.2 should be referenced here.

Response: The opening paragraph of Section 2 states the following:

"This section describes the physical setting of the former Naval installation as well as the regional and base-wide geology, hydrogeology, and ecology."

Section 2 is intended to provide a basewide overview of environmental conditions. Detailed information pertaining to groundwater flow and vertical gradient are presented in Section 4.

14. Comment: **<u>Section 3.2 – Scoping of the Remedial Investigation</u>. It is stated in the 6th paragraph that the storm sewer system was not evaluated as a potential source, but was considered to be a possible preferential pathway to Oakland Inner Harbor and San Francisco Bay. The Navy should investigate the soils, soil gas, and groundwater in the vicinity of all sewer systems, and potentially leaky water supply lines in OU2A because they represent a potential continuing source to groundwater. In addition, if residues are present within the sewers or the associated catch basins, these residues must be sampled for hazardous substances. Part of the description provided states that prior to 1972, storm sewers were used to collect surface water runoff from the runways and the tarmac, and they were also used for industrial waste disposal. Samples collected to investigate the sewer systems should be analyzed for VOCs, polynuclear aromatic hydrocarbons (PAHs), and metals, at a minimum.**

Response: The discussion of the storm sewer evaluations will be expanded. The RI report discusses sewer cleaning and replacement activity. The storm sewers are not used for industrial waste disposal, and almost all heavy industrial uses at the site ended 10 years ago; therefore, if lines have been cleaned and no industrial discharge to sewer lines is taking place, the storm sewers are not a continuing source of groundwater contamination.

The Navy is unclear why DTSC would request that "leaky water lines" be evaluated. Although a leaking water line may affect the migration of groundwater, it is not considered a source of groundwater contamination.

15. **Comment:** **<u>Section 3.4.1 – CERCLA Site Investigations</u>. In the 3rd paragraph, the objectives are described for the 2001 supplemental RI data gap sampling. One of the objectives was to investigate the storm sewer pathways. For each site in OU-2A, all hydraulic conductivity data collected from the sewer bedding material and the surrounding soil must be provided for review in the site specific sections.**

Response: The discussion of the storm sewer evaluations will be expanded to include all hydraulic conductivity data.

16. **Comment:** **<u>Section 3.5 – Data Quality Objectives (DQOs)</u>. Subsections 3.5.1 through 3.5.7 provide a written description of general DQOs as they apply to all five sites contained in OU2A. Site specific DQOs tables should be added to each site specific section (Sections 5.0 through 9.0). The general DQOs provided here suggest that the problem to be solved for the five sites is exactly the same. These DQOs are not an accurate statement of the problem at each site, and each specific objective. The use of site specific DQOs would provide a clear, concise picture of which chemical groups are considered to be the problem at each site in soil gas, soil, and groundwater. Site specific information should be provided for all the other steps in the DQO process for each site.**

Response: The site-specific results of applying the DQOs to Sites 9, 13, 19, 22, and 23 and a specific discussion of the quality and quantity of data collected at each site are presented in the site-specific sections (see Sections 5.3, 6.3, 7.3, 8.3, and 9.3). In addition to this text provided in the draft RI report, figures presenting the sampling locations by analytical group will be provided in the draft final RI report. The site-specific CSMs also present a clear, concise picture of which chemicals in soil and groundwater are considered to be the problem at each site.

17. **Comment:** **<u>Section 3.6 – Site Characterization and Risk Evaluation Methods</u>. It is stated in this section that a separate total petroleum hydrocarbon (TPH) evaluation for soil and groundwater, which is not commingled with a plume containing CERCLA chemicals, was conducted using the "*Preliminary Remediation Criteria and Closure Strategy for Petroleum Contaminated Sites at Alameda Point*" (the TPH Strategy) dated May 16, 2001. An inventory should be provided in this section of the locations at which a TPH only plume was identified based on the TPH Strategy, which has NOT been included in the OU-2A RI. The inventory must include the location of soil borings, groundwater sample points, analytical data, and the status of the investigation for each TPH only plume. The goal is for any reviewer to independently evaluate if an excluded plume is truly a non-CERCLA plume.**

Response: All data collected under Comprehensive Environmental Response, Compensation, and Liability Act (CERCLA) investigations were included in the RI report. For example, data from around Building 397, including data from a total petroleum hydrocarbons (TPH) only plume, was included in the EPC calculations for soil and groundwater risk at Site 13. The locations of TPH plumes are shown in figures in the site-specific sections (see Figures 6-13, 8-4, and 9-7). Appendix F specifies sampling locations yielding data used to evaluate the TPH plumes.

18. Comment: **<u>Section 3.6.3.1 – Selection of Background Data Sets</u>. This section cites the technical memorandums (TMs) in which the details used to construct ambient soil and groundwater data sets are presented. The referenced TMs are from 1997 and 1998. The Navy should explain why a more recent document was not referenced, *Summary of Background Concentrations in Soil and Groundwater*, November, 2001 (TTEMI). If there is a difference between the 1997 and 2001 documents, it must be described.**

Response: The RI report used the 2001 document. The draft final report will be revised to provide the correct citation.

19. Comment: **<u>Section 4.2.2.1 – Groundwater Flow in the FWBZ</u>. In the last sentence of the 3rd paragraph, it is stated that the April, 2003, data were corrected for tidal influence. However, FIGURE 4-15 – GROUNDWATER LEVEL ELEVATIONS WITHOUT TIDAL CORRECTIONS APRIL 2003, does not present tidally corrected groundwater elevation data. This figure should be replaced with one that properly shows tidal influence on groundwater elevations. Tidal influence should be evaluated using a 72 hour, time-weighted average method as described by Serfes (1991). Measurements must be collected at a minimum of five wells beneath each site. This method should be referenced in this subsection and described in detail in *Section 4.2.5 – Tidal Influence*.**

Response: Figure 4-15 shows the groundwater conditions at OU-2A during April 2003. During this time, active remediation, including vacuum extraction of groundwater at Site 13 and Site 23, was ongoing.

In the last paragraph of this section, it is stated that groundwater generally flows northeast to southwest, except in the western portion of Site 23 where groundwater flows is flowing to the northwest. Discussion should be added to the text to describe possible causes for this anomalous area, if it is still present when the water levels are appropriately corrected for tidal influence.

Response: Text will be added to describe the active remediation activity involving vacuum extraction of groundwater at Site 23, which creates a groundwater depression that radiates from the extraction point, causing the anomalous area.

20. **Comment:** **<u>Section 4.2.4.2 – Vertical Hydraulic Gradients</u>. It is stated in the 1st paragraph that elevation data from six pairs of monitoring wells were used to estimate the vertical gradients between the FWBZ and the SWBZ. A map should be provided showing the locations the well pairs, the estimated magnitude, and the direction of flow. For the FWBZ, only data from the tidally corrected, April, 2003 monitoring event should be used.**

Response: A table showing the wells evaluated, calculations conducted, and direction of vertical gradient will be included in the of the draft final report. This information will assist the reviewer in identifying the wells on the existing maps.

SITE 9 COMMENTS

1. **Comment:** **<u>Section 5.3.1 – Potential Sources</u>.**

(A) **The 2nd paragraph describes paint stripping wastes from Building 410 conveyed in storm, sanitary, and industrial sewers that likely leaked wastes through cracks or joints in the sewers directly to groundwater. Based on this information, all types of sewers beneath Site 9 should be listed as potential sources for discharge of solvents and metals to soil and groundwater. Although the Supplemental Data Gap Sampling, 2001 concluded that storm sewer bedding material was not a preferential flow path for contaminant migration, no documentation is provided to support this conclusion. Regardless, soil, soil gas and groundwater surrounding all storm and sanitary sewer lines, and potentially leaky water supply lines must be conducted, wherever this investigation has not already been completed. In addition, all piping associated with the former IWTP 410 should be considered as a potential source.**

Response: The discussion of the storm sewer evaluations will be expanded. The RI report discusses sewer cleaning and replacement activity. The conceptual model for Site 9 states that both the former storm sewer lateral lines (plugged in 1973) and industrial waste lateral lines may be potential sources of groundwater contamination. The Navy believes that the 18 sampling locations adjacent to the waste lines are sufficient to characterize soil and groundwater contamination.

The Navy is unclear why DTSC would request that "leaky water lines" be evaluated. Although a leaking water line may affect the migration of groundwater, it is not considered a source of groundwater contamination.

The Navy received a letter from DTSC regarding approval of the IWTP 410 closure certification report on November 9, 1998. This approval closed the IWTP Resource and Conservation Act (RCRA) Part A permit. No additional discussion of the IWTP will be included in the RI report.

(B) **It is stated in the 3rd paragraph, 1st bullet that Building 351 was a "*support*" building for Building 410. The term "*support*" building should be described, along with the identification of specific activities conducted in the building.**

Response: Building 351 is described on Page 5-2 as an office and break room for staff working in Building 410. These facts will be added to the bulleted text.

(C) **In the 2nd bullet, it is stated that the OWS associated with former plane washing activities is not considered a potential source, based on observations and cleaning conducted under the RCRA program. All details concerning the work conducted under RCRA should be provided in this RI. For a CERCLA investigation, samples must be collected from soil, soil gas, and groundwater beneath and around the OWSs associated with Building 410. Cleaning and observation activities generally do not provide an adequate level of characterization for a CERCLA RI.**

Response: The locations of oil-water separators (OWS) 410 A and B are misplotted on the map. Field verification shows that one OWS is present at the southeast corner of Building 410 (approximately 15 feet north-northeast of MW410-3 and 20 feet from DHP-S09-03). This OWS appears to be associated with a wash rack area shown at the location of OWS-410B. The OWS is effectively assessed by data from MW410-3. The Navy will collect coordinate data to correct the figures and demonstrate that a data gap is not present at this location.

2. **Comment:** **<u>Section 5.3.2.1 – Analytical Data Evaluation - Soil</u>.**

(A) **The number of samples from each chemical group that were considered acceptable to describe the nature and extent of soil contamination is provided in this section. FIGURE 5-2 provides information about the location, type of sampling process used, and the phase of investigation in which the sample was collected. However,**

FIGURE 5-2 does not show which chemical analyses were conducted at each sample location. FIGURE 5-3 for PAHs provides the location information and spatial distribution of samples collected for that chemical group. Separate figures should be provided for each chemical group to visually show the spatial distribution of sample locations and depths at which samples were collected for VOCs, SVOCs, pesticides, PCBs, and metals. Separate figures help review the adequacy of site characterization for risk assessment relative to existing and former industrial and physical features. In addition, text boxes should accompany each sample location point, and contain the detected concentration, the detection limit achieved (if it was non detect), and the applicable rPRG or background threshold value.

Response: Figures presenting the soil and groundwater sampling locations by analytical group will be added to the draft final RI report; however, chemical concentrations and screening criteria will not be included on the figures.

(B) **It is stated in the last sentence of the 1st paragraph that laboratory detection limits for some chemicals exceeded rPRGs. Based on Table 5-3, it appears that most of the detection limit issues concern analysis of SVOCs. See General Comment No. 3.**

Response: See the response to General Comment No. 3 on page 2.

(C) **In the last paragraph of this section, it is stated that the maximum PCE concentration was detected in the vicinity of the former IWTP 410, which was closed under RCRA in 1996. All details concerning the work conducted under RCRA should be provided in this RI. For an RI conducted under CERCLA, the lateral and vertical extent of VOCs in soil and groundwater in this area must be characterized.**

Response: As noted in Table 5-3 only 3 of 62 soil samples analyzed for tetrachloroethene (PCE) contained detectable concentrations of the compound. The highest detected concentration, as stated on Page 5-13, was 2 micrograms per kilogram (µg/kg) in environmental baseline survey (EBS) samples 153-IW-002 and 153-01-01. (The other detected concentration was 1 µg/kg at B410-8). These concentrations are less than the PRG of 1,500 µg/kg. No further evaluation of this compound in soil is required because the compound does not pose a risk at the site.

(D) **From the figures provided, it appears there is a general lack of soil data collected along sanitary and storm sewer lines currently present at Site 9. Based on the activities conducted in Building 410, based on the lack of soil samples from beneath OWSs and ASTs, and because**

the storm sewers were used for industrial waste disposal until 1972, additional soil sampling must be conducted at Site 9 in order to adequately characterize the site to conduct a defensible risk assessment. Soil matrix and soil gas samples must be collected at regular intervals along all existing (and removed, if known) sanitary and storm sewers, potentially leaky water supply lines, beneath the three OWSs and one catch basin, and beneath the four removed ASTs.

Response: As stated several times in the document (pages 5-11 and 5-16), the storm sewer and industrial waste lateral lines are below the groundwater table, and releases from these lines likely entered groundwater directly. The Navy believes that the 11 soil sampling locations adjacent to the waste lines are sufficient to characterize soil contamination. The aboveground storage tanks (AST) were closed, and there are no records of leaks or releases from the tanks. The lack of samples from below the OWS is a data gap. Groundwater near OWS-410B has been characterized, and there is no indication that the OWS-410B was a source of release. A data gap associated with OWS-410A is present and will be identified in the draft final RI Report.

Additional soil gas characterization will not take place at Site 9 as discussed in the response to General Comment No. 4D on page 5.

3. **Comment:** **Section 5.3.2.2 – Analytical Data Evaluation - Groundwater.**

(A) **The number of samples from each chemical group that were considered acceptable to describe the nature and extent of groundwater contamination is provided in this section. Based on the maps provided, the sampling locations for selected VOCs, naphthalene, and benzene are provided. Text boxes should be added to Figures 5-7, 5-9, 5-10, 5-12, 5-14, 5-15 to indicate the depths or screen intervals at which samples were collected, in addition to the data already provided. Separate figures should be provided for each chemical group to visually show the spatial distribution of sample locations and depths at which samples were collected for SVOCs, pesticides/PCBs, and metals. Text boxes should be used to display the detected concentration, sample depth or screen interval, and the detection limit achieved (if it was non detect). Separate figures help review the adequacy of site characterization for risk assessment relative to existing and former industrial and physical features.**

Response: Figures 5-7, 5-9, 5-10, 5-12, 5-14, 5-15 provide an overview of highest concentrations. Adding the collection depth of each sample will interfere with the readability of the figures. Sample depths are provided for 1,1-

dichloroethane (DCA); 1,2-dichloroethene (DCE); naphthalene; and vinyl chloride on Tables 5-5 through 5-8. The Navy will add tables for benzene and xylenes.

(B) **It is stated at the end of the 1st paragraph that laboratory detection limits for some chemicals in groundwater exceeded the PRGs. Based on Table 5-4, it appears that most of the detection limit issues concern analysis of VOCs and SVOCs. See General Comment No. 3 for details.**

Response: See the response to General Comment No. 3 on page 2.

A typical example of this problem can be seen on FIGURE 5-12, SITE 9 VINYL CHLORIDE IN GROUNDWATER. In the southeast corner of the site, Shallow Hydropunch (SHP) sample, SHP-S09-10, indicates that vinyl chloride was non-detect with a detection limit of 50 µg/L. Based on the detection limit, the plume boundary that has been drawn through this point can not accurately characterize the lateral extent of vinyl chloride in this area.

Response: Although the detection level for vinyl chloride in the sample from SHP-S09-10 was 50 micrograms per liter (µg/L), the characterization of vinyl chloride in groundwater considered the entire data set shown on Figure 5-12. Another sample was collected from approximately 15 feet north of this sampling location, and its result confirms that vinyl chloride is not present (sample 9-2 at 1 µg/L). A third sample collected from M09-06 located approximately 50 feet farther south of SHP-S09-10 also confirms that vinyl chloride is not present at 0.5 µg/L. The Navy used the term "not detected (ND)" to define the boundaries of groundwater contamination because of agreements with the BCT that older data could be used for site characterization and risk assessment purposes.

Moving the "ND" line 10 feet to the north would not significantly improve this figure or report, nor will it remove any uncertainty about current conditions at the site.

(C) **It is stated in the 3rd and 4th paragraphs that the maximum concentrations of PCE, TCE, 1,2-DCE (total), and vinyl chloride, benzene, toluene, naphthalene, and xylenes were detected in groundwater east of Building 410, coincident with the storm sewer system. As can be seen on FIGURE 5-2, there are large segments of sanitary and storm sewers for which the surrounding soils have not been investigated. In particular, minimal sampling has been conducted along the storm sewers on the western and northern sides of Building 410, in the northern quadrant of the site (near former**

Building 588, OWS-588, IWTP 410, and surrounding circular structures), in the southeast quadrant of the site (south of S&DHP-S09-08), and in the southwest corner of the site near OWS 410A&B and the catch basin. Justification should be provided for the concentration of sampling efforts around selected portions of the sewer system, while other segments were not sampled at all. Otherwise, additional groundwater investigation should be conducted in the unsampled areas to complete the definition of lateral and vertical extent. In addition, it appears that no investigation has been conducted to investigate potentially leaky water supply lines beneath Site 9. this investigation should also be conducted.

Response: As stated in the CSM, it is believed (based on information gathered during the initial assessment survey [IAS], and EBS) that the release mechanism for volatile organic compounds (VOC) to groundwater is from former storm sewers and industrial waste sewers exiting the building. Although fewer data were collected along the western storm sewer line, it is believed based on site observations and the 1994 follow-on sewer line videotaping that the floor drains within the building exit to the east and that the western line carries rainwater from downspouts on the roof. No data gap exists at this location.

The area south of S09-SHP-08 was characterized based on data from S09-S/DHP-10 and sample 9-2, and from M09-06. No data gap exists at this location.

In addition, the area around IWTP 410 was closed under a RCRA permit closure that evaluated soil and groundwater beneath the facility. Other data collected in the vicinity of IWTP 410 (such as at MW410-1) indicate 1,2-DCE detections at concentrations of 0.5 µg/L during two or eight sampling events only, suggesting that a data gap does not exist in this area.

The locations of OWSs 410 A and B are misplotted on the map. Field verification shows that one OWS is present at the southeast corner of Building 410 (approximately 15 feet north-northeast of MW410-3 and 20 feet from DHP-S09-03). This OWS appears to be associated with a wash down area shown at the location of OWS-410B. The OWS is effectively assessed based on data from MW410-3. The Navy will collect x and y coordinate data to correct the figures and demonstrate that a data gap is not present at this location.

(D) It is stated in the 5th paragraph that dissolved trivalent chromium was detected below the PRG of 55,000µg/L. However, no analyses for hexavalent chromium (CrVI) appear to have been conducted. Based on Table 5-4, trivalent chromium was detected in 17 of 50 samples at

concentrations up to 350µg/L (average 64µg/L). Justification should be provided for not evaluating CrVI throughout Site 9. The potential presence of CrVI should be systematically evaluated in soil and groundwater beneath all sewer lines and other appropriate industrial features at Site 9.

Response: The Navy evaluated the presence of chromium at Site 9. Elevated concentrations were detected in three wells (MW410-1, MW410-2, and MW410-3) during the 1990 sampling event. However, at least three samples collected more recently from each well show that chromium concentrations are less than 10 µg/L, suggesting that the samples from 1990 were not filtered. Only one other sample (grab groundwater sample S09-SHP-10 at 209 µg/L) contained chromium at a concentration greater than the ambient level but still two orders of magnitude below the PRG. No other samples collected at the site suggest evidence of a chromium release.

The lack of evidence suggesting a release of chromium at the site should be reason enough to not further evaluate hexavalent chromium; however, an evaluation of reduction-oxidation data suggests that the prevailing conditions in groundwater at Alameda Point are reducing, as supported by the presence of petroleum compounds such as naphthalene and benzene at Site 9 as well as the presence of the Bay Sediment Unit (BSU) organic layer below the water table. The prevalence of reducing conditions in groundwater makes the formation of hexavalent chromium extremely unlikely if not geochemically impossible (EPA 1999).

4. **Comment:** **<u>Section 5.3.2.3 – Analytical Data Evaluation – Soil Gas</u>. It is stated in this section that one soil gas sampling was conducted in one location at Site 9. The sample location, sample depths, and compounds detected should be discussed in this section or in the nature and extent discussion. Currently, soil gas information is found in the review of Section 5.2.2 - <u>Supplemental Data Gap Sampling Investigation, 2001.</u> Two samples (one location) were collected at 1.5 and 4.0 feet bgs to characterize all of Site 9. Chlorinated VOCs and benzene, toluene, ethylbenzene, and xylenes (BTEX) were detected in both samples. One soil gas sample location is not adequate to characterize the vadose zone site wide, evaluate risk, and provide adequate input for future indoor air modeling. In addition, the validity of a soil gas sample collected at 1.5 feet bgs is questionable due to near surface effects. A soil gas sampling plan must be developed to investigate soil gas in a systematic manner at all possible source areas, such as beneath sewer all storm and sanitary lines, OWSs, catch basins, and ASTs at Site 9. All future soil gas sampling must achieve detection limits that are below the PRGs.**

Response: See the response to General Comment No. 4 on page 5.

5. **Comment:** **<u>Section 5.4.1 – Nature and Extent of Chemicals in Soil</u>.**

(A) **The nature and extent of BaP and arsenic must be described in this RI. Arsenic is listed as a risk driver for soil and groundwater, BaP is listed as a risk driver for groundwater, and BaP should be listed as risk driver for soil due to the detection limit problem. As stated in General Comment No. 4(D), it is unacceptable to evaluate only chemicals that pose a risk if they relate to past site activities.**

Response: The Navy has revised the draft final RI report to add additional tables and figures that better demonstrate the iterative approach to investigating these sites. The Navy chose to include only risk driver chemicals in order to limit the length of the nature and extent discussion and still focus on chemicals identified as posing significant risk at each site. The RI report's data summaries and appendices assist reviewers in evaluating whether enough data were collected to produce meaningful risk estimates on chemicals found not to be risk drivers. The industrial nature of the sites precludes discussion of every chemical detected at concentrations exceeding PRGs and background levels because the number of compounds at concentrations exceeding these levels would detract from the cohesiveness of the presentation of each site evaluation.

The RI used an approach consistent with EPA guidance. The NCP and EPA guidance for conducting RIs and FSs under CERCLA (EPA 1988) state that the RI report should discuss the nature and extent of risks posed by hazardous substances. According to the NCP, in characterizing the site, the lead agency shall characterize the nature and threat posed by the hazardous substances and hazardous materials and gather data necessary to assess the extent to which the release poses a threat to human health and the environment (40 CFR, Section 300.430 [d][2]). In developing its guidance for the RI/ FS process, EPA declared that the purposes of the RI/FS process were to characterize the nature and extent of risks posed by uncontrolled hazardous waste sites and to evaluate potential remedial options (EPA 1988). Statutes and guidance therefore apparently intend that the RI report should identify the nature and extent of "contamination," which is defined by the risk assessments. The RI report should therefore focus on hazardous substances that pose risk (as defined by the risk assessment, <u>not by exceedence of PRG levels</u>).

Benzo(a)pyrene (BaP) in groundwater will be discussed in the nature and extent section. The historical BaP soil information was erroneously left in the RI report. The 2003 basewide polynuclear aromatic hydrocarbons

(PAH) investigation collected data to replace the historical BaP data. The draft final RI report will include only the 2003 PAH soil data.

(B) The nature and extent of BaP in soil is unclear. According to Table 5-3, 42 samples were collected. Of those, 32 were non detect with the detection limit greater than the rPRG of 62µg/kg. For the 10 samples with detection limits that achieved the PRG, all 10 had detectable concentrations of BaP. The maximum detected concentration was 1,300µg/kg, and the maximum non detected concentration was 960µg/kg. Clearly, additional discussion is needed to describe the nature and extent of BaP in soil. FIGURE 5-3 – SITE 9 RI PAH SAMPLE LOCATIONS, must provide text boxes with the information as specified above.

Response: See the response to Site 9 Specific Comment No. 5A, above, regarding the inclusion of historical PAH data. The draft final RI report will include only the 2003 PAH data.

(C) It is stated in the text that chlorinated solvents, naphthalene, chromium, and phenol were not detected in significant concentrations in soil. Although that may be true, it does not appear that the DQOs have been adequately met for defining the nature and extent of chemicals in Site 9 soils because it is not clear if the spatial distribution of soil data is sufficient to ensure confidence in risk assessment conclusions.

Response: Figures presenting the sampling locations by analytical group will be provided in the draft final RI report.

6. Comment: **<u>Section 5.4.2 – Nature and Extent of Chemicals in Groundwater</u>.**

(A) It is stated in the first paragraph that the commonly used solvents PCE and TCE were detected in only two and four samples, respectively, and are not discussed further. Based on Table 5-4, the characterization of TCE and PCE is suspect. Of 159 samples collected for analysis of TCE and PCE, 155 and 145 of the samples, respectively, were reported as non-detect based on detection limits greater than the PRGs. A similar situation exists for vinyl chloride, for which 121 of 159 total samples analyzed were reported as non-detect greater than the PRG. Although Tables 5-5 and 5-6 indicate that many of the detection limit problems may mask low level contamination, this situation must be clarified. Justification should be provided for using this data in an RI.

Response: As discussed in General Comment 3 on page 2 data have been collected at Site 9 over a period of over 10 years. Comparing data collected in 1990 to PRGs developed in 2002 as a basis for data validation is not appropriate.

(B) FIGURE 5-7 presents the lateral extent of several individual VOC plumes on one map, which is a useful visual way of estimating the lateral extent of total VOCs in the FWBZ. However, in three places, the plume lines are defined as ND for non-detect. A concentration value must be used instead of ND to label a plume boundary. The use of a concentration value to label plume values applies to all maps where this practice has been implemented, such as FIGURES 5-8, 5-10, 5-12, 5-14, and 5-16 at Site 9. Groundwater plume maps for all sites in OU-2A must also use a concentration value to mark a plume boundary.

Response: Because the Navy is using data from several investigations that had different detection values, the ND line was selected to demonstrate that the sites are adequately characterized. Sample results with qualifiers are presented on the figures to assist in defining the detection values used to define the ND line. The figures will not be revised.

(C) The vertical cross sections provided to display concentration information are very helpful in assessing the extent of contamination. However, the cross sections must be supported by maps that display the depths of VOC groundwater samples and concentrations detected so the lateral and vertical extent of contamination can be evaluated in three dimensions. The insertion of text boxes on the individual VOC plume map figures would allow the inclusion of sample depths for the reported VOCs, in addition to the sample date and concentration already provided.

Response: The quantity of data points present at OU-2A sites does not allow for the insertion of text boxes. Figures 5-7, 5-9, 5-10, 5-12, 5-14, and 5-15 provide an overview of highest concentrations. Adding the depth of each sample will interfere with the readability of the figures. Sample depths are provided for 1,1-DCA; 1,2-DCE; naphthalene; and vinyl chloride on Tables 5-5 through 5-8. The Navy will add tables for benzene and xylenes.

(D) Finally, the GSU does not believe the DQOs have been adequately met for Site 9 groundwater to have sufficiently defined the nature and extent of chemicals in groundwater, and ensure confidence in risk assessment conclusions. Hazardous constituents may still be present, particularly beneath sewer lines, potentially leaky water supply lines, OWSs, and ASTs, at levels that could pose a risk and require a FS.

As stated above, there are large segments of sanitary and storm sewers that have not been investigated, and additional groundwater investigation should be conducted in unsampled areas to complete the definition of lateral and vertical extent of contamination beneath Site 9.

Response: The data provided in the RI report show that the site has been adequately characterized to move the site forward to an FS.

7. **Comment:** **<u>Section 5.5 – Fate and Transport</u>. It is stated in the text that residual naphthalene concentrations and benzene group compounds are expected to decrease further by natural attenuation, or be addressed completely by natural attenuation processes. As stated in the general comments, all current and future discussions about the possible occurrence of natural attenuation at Site 9 must be supported by a rigorous demonstration of natural attenuation processes. This demonstration must provide multiple lines of evidence shown by chemical data from repetitive groundwater monitoring and repetitive soil sampling events, and graphical displays as previously described. The multiple lines of evidence must prove that degradation pathways result in harmless end products.**

Response: Because groundwater at Site 9 will be addressed further during the FS and will likely be subject to active remediation activity, the discussion of fate and transport will not be changed.

8. **Comment:** **<u>Section 5.8 – Conclusions and Recommendations</u>. These will be addressed in comments on Section 10.0 – Summary and Conclusions.**

Response: This comment is noted.

SITE 13 COMMENTS

General Comments

1. **Comment:** **A major deficiency for the Site 13 is that Navy has not included the TRW in the HHRA. The TRW contains elevated levels of PAHs, benzene, and lead, and has a pH of less than 2.0. Therefore, it must be included in the HHRA.**

   Response: The Navy agrees that tarry refinery waste (TRW) data should have been included in the HHRA; however, the exclusion of these data did not change the conclusions of the report. The Navy requests that DTSC accept the risk assessment as it currently stands.

2. **Comment:** **At Site 13, the magnitude and uniqueness of the problems present can not be adequately characterized and evaluated for possible remedial alternatives within the framework of the OU-2A RI along with four other CERCLA sites. Therefore, we believe Site 13 should be removed form the OU-2A RI, and should be evaluated under CERCLA in a separate, stand alone RI dedicated exclusively to Site 13.**

   Response: The issues at Site 13 are very similar to those at surrounding sites, and the site will remain part of the OU-2A RI.

3. **Comment:** **The hazardous constituents (PAHs, benzene, and lead), and the low pH of the TRW mixed with the fuels and floating product, means there are TPH and CERCLA co-mingled plumes. Therefore, Site 13 must be investigated under CERCLA, not in the TPH program.**

   Response: Site 13 is evaluated under CERCLA, and the TPH screening is conducted at the site as well. The TPH plume around Building 397 is a TPH only plume and will be addressed alone under the TPH Program.

Specific Comments

4. **Comment:** <u>**Section 6.3.1 – Potential Sources**</u>

   (A) **All storm and sanitary sewers, and potentially leaky water supply lines beneath Site 13 must be included as potential sources, particularly those segments shown on FIGURE 6-3 – SITE 13 STORM SEWER CONDITION, marked "*Damaged – high and low priority*." Plus, in the <u>Supplemental Data Gap Sampling, 2001</u>, an**

evaluation of preferential flow paths associated with the storm sewer system was conducted. It was concluded that the storm sewer bedding material has higher hydraulic conductivity than the surrounding native soil at Site 13. Therefore, soil, soil gas and groundwater surrounding storm and sanitary sewer lines, and potentially leaky water supply lines must be sampled, wherever not already completed.

Response: See the response to General Comment No. 1 on page 1.

(B) **It is stated in the 3rd paragraph, 3rd bullet, that GAP 62 was closed under the RCRA program. All details concerning the work conducted under RCRA, or justifications used to support closure, should be provided in this RI. If soil and groundwater sampling data surrounding the GAP were collected by the RCRA program, it should be briefly summarized here to document that soil and groundwater beneath the GAP are free of hazardous materials. If not, additional soil and groundwater sampling may be necessary beneath the GAP.**

Response: All RCRA evaluations will be included in the draft final RI report.

5. Comment: **<u>Section 6.3.2.1 – Analytical Data Evaluation - Soil</u>.**

(A) **The number of samples from each chemical group that were considered acceptable to describe the nature and extent of soil contamination is provided in this section. FIGURE 6-4 provides soil and groundwater information about the sample location, type of sampling process used, and the phase of investigation in which the sample was collected. However, FIGURE 6-4 does not show which chemical analyses were conducted at each location, and is not useful for evaluating the spatial distribution of samples collected for each chemical group. FIGURES 6-7, 6-11, and 6-12 provide location information and spatial distribution of samples collected for PAHs, benzene, and lead, respectively. However, for a final RI Report, a clear, visual picture must be provided for the spatial distribution of soil sampling conducted for each chemical group, regardless if the group contains a risk driver or not. Separate figures should be provided for each chemical group to show the spatial distribution of sample locations and depths at which samples were collected for VOCs, SVOCs, pesticides, PCBs, and metals. Separate figures help review the adequacy of site characterization for risk assessment relative to existing and former industrial and physical features. In addition, text boxes should accompany each sample location point, and contain the detected concentration, the detection limit achieved (if it was non detect), and the applicable rPRG or background threshold value.**

Response: Figures presenting the soil and groundwater sampling locations by analytical group will be added to the draft final RI report; however, chemical concentrations and screening criteria will not be included on the figures.

(B) It is stated in the last sentence of the 1st paragraph that laboratory detection limits for some chemicals exceeded rPRGs. Based on Table 6-3, it appears that most of the detection limit issues concern analysis of SVOCs. See General Comment No. 3.

Response: See the response to General Comment No. 3 on page 2.

(C) Based on FIGUE 6-4, it does not appear that a systematic approach to sampling all storm and sanitary sewer lines has been conducted. Due to the volume of sampling conducted for TRW at this site, it appears that by default, areas near several segments of the lines have been investigated. However, there are still other segments of sewer lines that have not been investigated, as can be seen on Figure 6-4. Additional soil sampling must be conducted along unsampled segments of sewer lines at Site 13 in order to adequately characterize the remainder of the site and conduct a defensible risk assessment. Both soil matrix and soil gas samples should be collected in this sampling effort.

Response: See the response to General Comment No. 1 on page 1. Additional sampling will not be conducted around sewers at Site 13.

6. **Comment:** **Section 6.3.2.1 – Analytical Data Evaluation - Groundwater.**

(A) The number of samples from each chemical group that were considered acceptable to describe the nature and extent of groundwater contamination is provided in this section. Based on the maps provided, the spatial distribution of samples collected for analysis of TPH, benzene, and TCE only are provided. On FIGURE 6-13, TPH IN GROUNDWATER, the significance of drawing the plume boundary at 1,400µg/L should be noted on the map legend and explained in the text.

Response: Figure 6-15 will be revised to include additional information in the legend to describe 1,400 µg/L as the action level for total TPH in groundwater to be protective of ecological receptors if TPH reaches the San Francisco bay.

(B) **On FIGURES 6-14 and 6-15, BENZENE and TCE IN GROUNDWATER, respectively, text boxes should be added to the figures to indicate the depths or screen intervals at which samples were collected, in addition to the information already provided. Text boxes could make it easier to read the data on top of the numerous cultural features.**

Response: Adding the depth of each sample will interfere with the readability of the figures. Sampling depths are provided for benzene and trichloroethene (TCE) on Tables 6-10 and 6-11.

(C) **Separate figures should be provided to show the spatial distribution of samples collected for analysis of SVOCs, pesticides/PCBs, and metals. The figures should contain text boxes with sample depths or screen intervals, concentrations or detection limit (if non-detect), and the dates of sample collection. For all chemical groups, even if not determined to contain risk drivers, separate figures help review the adequacy of site characterization for risk assessment relative to existing and former industrial and physical features.**

Response: See the response to Site 13 Specific Comment No. 5A on page 28.

(D) **It is stated at the end of the 1st paragraph that laboratory detection limits for some chemicals in groundwater exceeded the PRGs. Based on Table 6-4, it appears that most of the detection limit issues concern analyses for VOCs and SVOCs. See General Comment No. 3.**

Response: See the response to General Comment No. 3 on page 2.

7. **Comment:** **<u>Section 6.3.2.3 – Analytical Data Evaluation – Soil Gas</u>. It is stated in this section that one soil gas sample was collected in one location at Site 13. The sample location, sample depths, and compounds detected should be discussed in this section, or in the nature and extent discussion. Currently, soil gas information is found in Section 6.2.2 - <u>Supplemental Data Gap Sampling Investigation, 2001</u>. Two samples from the one location were collected at 1.5 and 4.0 feet bgs to characterize Site 13. Chlorinated VOCs and BTEX were detected in both samples. One soil gas sample location is not adequate to characterize the vadose zone site wide, evaluate risk, and provide adequate input for future indoor air modeling. In addition, the validity of a soil gas sample collected at 1.5 feet bgs is questionable due to near surface effects. A soil gas sampling plan must be developed to investigate soil gas in a systematic manner at all possible source areas, such as beneath all storm and sanitary lines, OWSs,**

catch basins, and ASTs at Site 13. All future soil gas sampling must achieve detection limits that are below the PRGs.

Response: See the response to General Comment No. 4 on page 5.

8. **Comment:** **Section 6.4.1 – Nature and Extent of Chemicals in Soil.**

(A) **<u>Waste from the Former Refinery</u>. In *Section 10.2.1 - Summary and Conclusions –Site 13 Soil*, the Navy acknowledges that the waste must be removed due to the extremely low pH, and the due to the continuing source provided to groundwater of PAHs, benzene, and lead. The potential of this low pH waste to continue mobilizing lead, other metals, benzene, and other VOCs must be addressed as soon as possible. The Navy should increase its efforts for removal of the TRW at Site 13.**

Response: This comment is noted. The Navy will be issuing an FS document soon to discuss strategies for addressing the TRW.

(B) **<u>Jet Fuel from Building 397</u>. It is stated in this discussion that this jet fuel contamination is being further addressed in the TPH screening evaluation because the contamination is not likely commingled with any CERCLA chemical. The Navy must firmly establish that the jet fuel is not commingled with CERCLA chemicals.**

Response: Soil samples from borings 210IW-001, 210-IW-003, and CA13-26 were analyzed for metals (see Figure 6-12), and groundwater samples MWOR-1, MW-1, CA13-02, CA13-14, CA13-15, and S13-DGS-VE01 were analyzed for VOCs (see Figure 6-14). These samples were collected near the OWSs and did not indicate evidence of CERCLA releases. This area has been evaluated for CERCLA contaminants, and remedial activity for the TPH release is ongoing.

(C) **It does not appear that the DQOs have been adequately met for defining the nature and extent of chemicals in Site 13 soils because it is not clear if the spatial distribution of soil data is sufficient to ensure confidence in risk assessment conclusions. As commented above for <u>Section 6.3.2.1 – Analytical Data Evaluation – Soil</u>, separate figures should be provided for each chemical group to show the spatial distribution of sample locations, depths, and dates at which samples were collected for VOCs, SVOCs, and metals. Also, additional soil sampling should be conducted at Site 13 in order to adequately characterize the soil matrix and soil gas samples at regular intervals along all existing (and removed, if known) sanitary and storm sewers,**

and potentially leaky water supply lines, that have not been investigated previously.

Response: Separate figures will be provided in the draft final RI report to demonstrate that the site has been adequately characterized. No additional sampling will be conducted at Site 13.

9. **Comment:** **Section 6.4.2 – Nature and Extent of Chemicals in Groundwater.**

(A) **Waste from the Former Refinery. In *Section 10.2.2 - Summary and Conclusions –Site 13 Groundwater*, the Navy acknowledges that the refinery waste and associated floating product in the groundwater must be removed because both are a continuing source to groundwater of VOCs, benzene, trimethylbenzenes, xylenes, naphthalene, lead, and possibly other metals as well, due to the low pH of the TRW in soil. The Navy should increase its efforts for removal of the TRW and floating product at Site 13. In addition, the thickness of floating product must be determined in order to estimate a volume for evaluating remedial alternatives.**

Response: See the response to General Comment No. 8 on page 9.

(B) **Benzene. The occurrence of benzene in groundwater is described in this subsection. However, because 110 of the 131 analyses conducted for benzene were reported as non-detect with the detection limit greater than the PRG, it is difficult to assess the accuracy of the plume map shown. On Figure 6-14, one small benzene plume is shown in the southeast corner of the site. This plume does not coincide with the majority of the area covered by the known and potentially impacted TRW areas. This discrepancy should be explained.**

Response: The detection limit for benzene in 106 of 131 samples was 1 μg/L or lower, and none of the detected benzene concentrations exceeded 5 μg/L. The benzene plume in the southeast portion of the site is within the area of mapped TRW. It is possible that the refining processes in this area generated some light-end hydrocarbons, resulting in the presence of benzene and floating product in groundwater. The text will discuss the heterogeneity of the TRW in more detail.

(C) **Trichloroethene. The occurrence of TCE in groundwater is described in this subsection. However, because 116 of the 121 analyses conducted for TCE were reported as non-detect with the detection limit greater than the PRG, it is difficult to assess the accuracy of the description provided by Figure 6-15. Vinyl chloride and several other**

chlorinated VOCs present similar concerns. For vinyl chloride, 121 of 121 analyses conducted were reported as non-detect with the detection limit greater than the PRG. The analysis of vinyl chloride, and other VOCs, may not accurately characterize the presence of VOCs in groundwater at this time. Site 13 is situated directly down-gradient and/or cross-gradient (depending on tidal influence) from OU-2B, Sites 3, 4, 11, and 21. Beneath OU-2B, a laterally extensive (OU-wide) chlorinated VOC plume has been mapped in the FWBZ. Therefore, the possible migration of VOCs from OU-2B to OU-2A must be evaluated. Analytical detection limits that meet the PRGs are necessary to do that. These discrepancies for VOC analyses must be resolved.

Response: Achieving detection limits below the PRG for TCE and vinyl chloride is not possible on a routine basis, especially for environmental samples that include matrix interferences. The samples were analyzed with detection limits that are as low as technically feasible using routine EPA methods. The samples collected at Site 13 were analyzed by CLP laboratories to detection levels outlined by EPA protocol. Of the 121 samples analyzed for TCE, 97 detection levels of 1 µg/L or lower. An additional 12 samples had detection limits of 2 µg/L. Only four samples had detection limits greater than 10 µg/L.

For vinyl chloride, 107 of 121 samples had detection limits of 0.5 µg/L. Only two samples had detection levels of greater than 10 µg/L. Site 13 has been adequately characterized for VOCs.

(D) Finally, the GSU does not believe the DQOs have been adequately met for Site 13 groundwater to have sufficiently defined the nature and extent of chemicals in groundwater, and ensure confidence in risk assessment conclusions. In addition, CERCLA constituents may still be present, particularly beneath sewer lines, potentially leaky water supply lines, OWSs, ASTs, and catch basins that may not have been adequately defined, either because the areas were not sampled or due to the detection limit issues. As stated above, there are large segments of sanitary and storm sewers that have not been investigated. Additional groundwater investigation should be conducted in the unsampled areas to complete the definition of lateral and vertical extent of contamination beneath Site 13.

Response: The Navy believes that based on the response provided above, the site has been adequately characterized. No additional sampling will be conducted at Site 13.

10. Comments: Section 6.5 – Fate and Transport.

(A) **<u>Lead in Soil.</u> It is stated in this subsection that although lead in soil above the groundwater is not expected to move quickly, elevated lead in soil may dissolve and become mobile in groundwater. This fate and transport discussion must be expanded to include a detailed explanation of why lead may dissolve and become mobile at Site 13. This discussion should be demonstrated with the use of existing soil and co-located groundwater data for lead. The maximum concentration of lead detected in groundwater, as reported in Table 6-4 is 1,770µg/L, and there is no Region 9 PRG listed. Soil and groundwater modeling should be considered to predict the movement of lead in the future.**

Response: Lead in groundwater around the high lead concentration has been characterized, although the contamination has not been fully bounded. The high concentration of lead was detected at B-IMF-09. A groundwater sample from M-IMF-01, which is located approximately 30 feet southwest and immediately downgradient of B-IMF-09, contained 1.5 ug/L lead. A sample from M13-06 located approximately 80 feet west of B-IMF-09 contained less than 0.23 µg/L lead. The MCL for lead in groundwater is 15 µg/L. Based on the data from Site 13, the limits of lead in groundwater have been defined adequately to draw the conclusion that significant mobilization of lead is not occurring.

(B) **<u>Benzene, Ethylbenzene, and Xylenes.</u> General, unsubstantiated statements are made in this subsection concerning the concentrations of these compounds detected near the ASTs in 2000 were lower, *suggesting natural attenuation*, and that the plumes appear not to be migrating with groundwater. Statements concerning natural attenuation must be fully demonstrated and substantiated with extensive data sets. As stated in the general comments, this demonstration must provide multiple lines of evidence shown by chemical data from repetitive groundwater monitoring and repetitive soil sampling events, and graphical displays as described. This is not an acceptable documentation of natural attenuation for these compounds.**

Response: The discussion of natural attenuation has been removed from this section. This RI report recommends that groundwater be evaluated further during the FS. The FS report will discuss natural attenuation factors in the evaluation of monitored natural attenuation.

(C) **<u>Trichloroethene</u>. The occurrence of TCE in groundwater is briefly described based on five samples (with unknown detection limits) and the statement that natural attenuation processes....will most likely degrade the low concentrations of TCE in groundwater at Site 13.**

Once the problem concerning detection limits is resolved, all future discussions about the natural attenuation of TCE (and other chlorinated VOCs) at Site 13 must be supported by a rigorous demonstration of natural attenuation provided by multiple lines of evidence.

Response: The fate and transport of TCE is discussed in relation to the five samples (of the 121 samples analyzed for TCE) in which it was detected. A coherent discussion of the fate and transport of TCE is not possible because the data do not suggest a TCE plume but rather five single-point detections amongst multiple sampling locations where TCE was not detected above laboratory detection limits (see the response to Site 13 Specific Comment No. 9C on page 32 for a discussion of detection limits).

11. Comment: **Section 6.8 – Conclusions and Recommendations. These will be addressed in comments on Section 10.0 -- Summary and Conclusions.**

Response: This comment is noted.

SITE 19 COMMENTS

1. Comment: **Section 7.3.1 – Potential Sources.**

(A) All storm and sanitary sewers, and potentially leaky water supply lines should also be listed as potential sources for discharge of contaminants to soil and groundwater. Although the Storm Sewer Investigation, 2000 found that the sewers beneath Site 19 were in good condition, this investigation did not involve soil, soil gas, or groundwater sampling in soils around the sewers. Because Site 19 is surrounded by Sites 4, 22, and 13, limited sampling should be conducted along the sewers to verify that contaminants have not migrated from more industrialized sites, and that the Storm Sewer Investigation conclusion was correct.

Response: See the response to General Comment No. 1 on page 1.

(B) The last bullet in this section states that USTs 616-1 and 616-2 never contained hazardous waste. Analytical soil and groundwater data must be provided to document that hazardous materials did not leak from these tanks. The media should be sampled for chlorinated and aromatic VOCs, metals, and PCBs.

Response: The text will be revised to read as follows: "Two USTs, 616-1 (5,000-gallon capacity) and 616-2 (10,000-gallon capacity), were built for spill

containment and emergency overflow but were never used (Figure 7-1)." This change will accurately reflect the use of those USTs. There are no records suggesting that significant releases of material occurred within Yard D-13 or that the overflow tanks were utilized. Five soil samples from BD13-5 located within 25 feet of the USTs were analyzed for VOCs. Groundwater samples from monitoring well 372-MW2 25 feet downgradient from the USTs were also analyzed. No evidence of CERCLA contamination was observed at this sampling location.

2. **Comment:** **Section 7.3.2.1 – Analytical Data Evaluation - Soil.**

(A) **The number of samples from each chemical group that were considered acceptable to describe the nature and extent of soil contamination is provided in this section. FIGURE 7-3 provides information about the location, type of sampling process used, and the phase of investigation in which the sample was collected. However, FIGURE 7-3 does not show which chemical analyses were conducted at each location, thereby displaying the spatial distribution of samples collected for each chemical group. Only FIGURE 7-4 provides the location information and spatial distribution of samples collected for the PAH chemical group. Separate figures should be provided for each chemical group to visually show the spatial distribution of sample locations and depths at which samples were collected for VOCs, SVOCs, pesticides/PCBs, and metals. Separate figures help review the adequacy of site characterization for risk assessment relative to existing and former industrial and physical features. Text boxes should accompany each sample location point, and contain the detected concentration, the detection limit achieved (if it was non detect), and the applicable rPRG or background threshold value.**

Response: See the response to Site 13 Specific Comment No. 8C. Text boxes will not be included in the revised figures because detection levels for different compounds within each analytical group may be different.

(B) **It is stated in the last sentence of the 1st paragraph that laboratory detection limits for some chemicals exceeded rPRGs and are noted on Table 7-3. Based on Table 7-3, it appears that most of the occurrences of a detection limit greater than an rPRG were for SVOCs. See General Comment No. 3.**

Response: See the response to General Comment No. 3 on page 2.

3. **Comment:** **Section 7.3.2.2 – Analytical Data Evaluation - Groundwater.**

(A) **The number of samples from each chemical group that were considered acceptable to describe the nature and extent of groundwater contamination is provided in this section. Based on the maps provided, the spatial distribution of samples collected for analysis of only PCE and TCE are provided on Figures 7-7 and 7-8, respectively. Figures should also be provided to show the spatial distribution of samples collected for analysis of SVOCs, pesticides/PCBs, and metals. All the figures should contain text boxes with sample depths or screen intervals, concentrations or detection limit (if non-detect), and the dates of sample collection. For all chemical groups, even if not determined to be risk drivers, separate figures help review the adequacy of site characterization for risk assessment relative to existing and former industrial and physical features.**

Response: See the response to Site 9 Specific Comment No. 3A on page 19 and Site 13 Specific Comment No. 8C on page 32. Text boxes will not be added to figures.

(B) **It is stated at the end of the 1st paragraph that laboratory detection limits for some chemicals in groundwater exceeded the PRGs. Numerous analyses for PCBs, SVOCs, and VOCs had detection limits greater than the PRGs in 50% or more of the samples. See General Comment No. 3.**

Response: See the response to General Comment No. 3 on page 2.

4. **Comment:** **<u>Section 7.3.2.3 – Analytical Data Evaluation – Soil Gas</u>. It is stated in this section that no soil gas samples were collected to characterize the site. A soil gas sampling plan must be developed to investigate soil gas in a systematic manner beneath Yard D-13 open areas, beneath sewer lines, and potentially leaky water supply lines, and beneath catch basins at Site 19. All future soil gas sampling must achieve detection limits that are below the PRGs.**

Response: See the response to General Comment No. 4E on page 6.

5. **Comment:** **<u>Section 7.4.1 – Nature and Extent of Chemicals in Soil</u>. The GSU believes the DQOs may not have been adequately met for Site 19 soils because it is not clear if sufficient soil data has been collected to ensure confidence in risk assessment conclusions. Additional sampling should be conducted beneath sewer lines, and potentially leaky water supply lines, and separate figures should be provided to better display the spatial distribution of samples collected for analysis of each chemical group.**

Response: See the response to General Comment No. 4D on page 5.

6. **Comment:** **<u>Section 7.4.2 – Nature and Extent of Chemicals in Groundwater</u>. Only two chemicals, PCE and TCE, are discussed in detail in this section. Based on the data provided, it appears that a low level VOC plume is present beneath Yard D-13. However, because of the high percentage of non-detected results greater than the PRGs, the lateral extent of this plume may be more extensive than is shown on Figures 7-7 and 7-8. It should be noted that even a low level VOC plume needs to be accurately defined in order to propose natural attenuation as part of possible future groundwater remedies.**

Response: The lateral extents of the plumes are defined by the presence or absence of the compounds in the samples, not by comparison with the PRG levels. Although the plumes have not been fully bounded, the Navy believes that these small data gaps can be addressed during the design data collection phase of the FS.

7. **Comment:** **<u>Section 7.5 – Fate and Transport</u>.**

(A) **It is stated in the text that the absence of breakdown products like vinyl chloride suggests relatively small quantities of chlorinated VOCs were released at Site 19 during the last 10 years. This statement should be modified because it does not accurately reflect the possibility that a low level vinyl chloride plume is present at Site 19. As reported in Table 7-4, 55 analyses were conducted for vinyl chloride, and all were reported as non-detect with a detection limit greater than the PRG.**

Response: Achieving detection limits below the PRG for vinyl chloride is not possible on a routine basis, especially for environmental samples that include matrix interferences. The samples were analyzed with detection limits that are as low as technically feasible using routine EPA methods. The samples collected at Site 19 were analyzed by CLP laboratories at detection limits outlined by EPA protocol. Out of the 55 samples analyzed for vinyl chloride, 51 had a detection level of 0.5 µg/L. The PRG for vinyl chloride is 0.02 µg/L.

(B) **It is stated in the text that based on the low concentrations of VOCs detected at Site 19, the chemicals are not expected to migrate far before dechlorination and dilution will attenuate them to below their respective PRGs. This statement should be documented with a demonstration of multiple lines of evidence that clearly show the occurrence of these processes.**

Response: Because Site 19 is recommended for further evaluation during the FS, the Navy will not include this information in the draft final RI report.

8. **Comment:** **<u>Section 7.8 – Conclusions and Recommendations</u>. These will be addressed in comments on Section 10.0 -- Summary and Conclusions.**

Response: This comment is noted.

SITE 22 COMMENTS

1. **Comment:** **<u>Section 8.3.2.1 – Analytical Data Evaluation - Soil</u>.**

(A) **The number of samples from each chemical group that were considered acceptable to describe the nature and extent of soil contamination is provided in this section. FIGURE 8-2 provides information about the location, type of sampling process used, and the phase of investigation in which the sample was collected. However, FIGURE 8-2 does not show which chemical analyses were conducted at each location, thereby displaying the spatial distribution of samples collected for each chemical group. Only FIGURE 8-3 provides the location information and spatial distribution of samples collected for the PAH chemical group. Separate figures should be provided for each chemical group to visually show the spatial distribution of sample locations and depths at which samples were collected for VOCs, SVOCs, and metals. Separate figures are needed to review the adequacy of site characterization for risk assessment relative to existing and former industrial and physical features. In addition, text boxes should accompany each sample location point, and contain the detected concentration, the detection limit achieved (if it was non detect), and the applicable rPRG or background threshold value.**

Response: Analyte-specific soil sampling location figures will be provided in the draft final RI report. Text boxes will not be included on the figures. Table 8-1 provides the information requested.

(B) **It is stated in the last sentence of the 1st paragraph that laboratory detection limits for some chemicals exceeded rPRGs. Based on Table 8-3, it appears that most of the detection limit issues concern analysis of SVOCs. See General Comment No. 3.**

Response: See the response to General Comment No. 3 on page 2.

2. **Comment:** **<u>Section 8.3.2.2 – Analytical Data Evaluation - Groundwater</u>.**

(A) **The number of samples from each chemical group that were considered acceptable to describe the nature and extent of groundwater contamination is provided in this section. Based on the maps provided, the spatial distribution of samples collected for analysis of only TPH and TCE are provided on Figures 8-4 and 8-5, respectively. Separate figures should also be provided to show the spatial distribution of samples collected for analysis of SVOCs, pesticides/PCBs, and metals. All the figures should contain text boxes with sample depths or screen intervals, concentrations or detection limit (if non-detect), and the dates of sample collection. For all chemical groups, even if not determined to be risk drivers, separate figures help review the adequacy of site characterization for risk assessment relative to existing and former industrial and physical features.**

Response: Analyte-specific groundwater sampling location figures will be provided in the draft final RI report. Text boxes will not be included on the figures. Table 8-2 provides the information requested.

(B) **It is stated at the end of the 1st paragraph that laboratory detection limits for some chemicals in groundwater exceeded the PRGs. Based on Table 8-4, numerous analyses for SVOCs and VOCs had detection limits greater than the PRGs in 50% or more of the samples. See General Comment No. 3.**

Response: See the response to General Comment No. 3 on page 2.

3. **Comment:** **<u>Section 8.3.2.3 – Analytical Data Evaluation – Soil Gas</u>. It is stated in this section two soil gas samples were collected at Site 22. The sample locations, sample depths, and compounds detected should be discussed in this section or in the nature and extent discussion. Currently, soil gas information is found in Section 8.2.2 - <u>Supplemental Data Gap Investigation, 2001.</u> Two locations were sampled at two depths (1.5 and 4.0 feet bgs) to characterize all of Site 22. BTEX compounds were detected in all four samples. Two soil gas sample locations is not adequate to characterize the vadose zone site wide, evaluate risk, and provide adequate input for future indoor air modeling. In addition, the validity of a soil gas sample collected at 1.5 feet bgs is questionable due to near surface effects. A soil gas sampling plan must be developed to investigate soil gas in a systematic manner beneath open areas, beneath all sanitary and storm sewer lines, and potentially leaky water supply lines, near catch basins, the OWS, and former USTs at Site 22. All future soil gas sampling must achieve detection limits that are below the PRGs.**

Response: See the response to General Comment No. 4E on page 7.

4. **Comment:** **<u>Section 8.4. – Nature and Extent of Chemicals in Soil and Groundwater</u>. It is stated in this section that fuel release at Site 22 are being addressed under the TPH program. This approach may not be valid under CERCLA. BTEX, 1,2-DCA, naphthalene, arsenic, BaP, and lead have been detected in soil. BTEX, 1,2-DCA, naphthalene, TCE, PCE, MTBE, carbon disulfide, chloromethane, arsenic, manganese, and thallium have been detected in groundwater. Regardless of whether these chemicals were directly related to operation of the service station, there are CERCLA chemicals present at Site 22. The presence of these chemicals along with fuels means there are TPH and CERCLCA co-mingled plumes. Therefore, Site 22 groundwater must be addressed in this RI, not by the TPH Program.**

Response: Benzene toluene, ethylbenzene, and xylene (BTEX); naphthalene; methyl tert-butyl ether (MTBE); and 1,2-DCA are documented fuel components. Arsenic and thallium are naturally occurring at background levels and under CERCLA should not be addressed further. If concentrations of TCE and PCE are actually present at Site 22 (which the Navy doubts based on the frequency of detected concentrations, property use, and locations of detected concentrations within a petroleum plume), they will be addressed by the ongoing remedial action under the TPH Program. Carbon disulfide was detected in two samples collected through the free product plume. Chloromethane was detected in one sample at concentrations below the PRG. Manganese is present at the site at concentrations consistent with those observed throughout Alameda Point but above concentrations in the background data set. Groundwater at Site 22 will be recommended for further evaluation in the FS.

5. **Comment:** **<u>Section 8.4.1 – Nature and Extent of Chemicals in Soil</u>.**

(A) **It is stated in this section that no evidence suggesting the use of CERCLA chemicals exists. This statement must be clarified or removed. As stated in Section 8.3.2.1, BTEX, 1,2-DCA, and naphthalene were used at Site 22 and have been detected in soil, several of which are CERCLA chemicals.**

Response: BTEX, 1,2-DCA, and naphthalene are common petroleum contaminants. The site history and conceptual site model suggest that these compounds are from petroleum releases. These compounds will be addressed under the TPH Program.

(B) **The GSU believes the DQOs may not have been adequately met for Site 22 soils because it is not clear if the spatial distribution of soil**

data is sufficient to ensure confidence in risk assessment conclusions. Additional sampling should be conducted beneath storm and sanitary sewer lines, and potentially leaky water supply lines, and beneath OWS-547, an area which has not been investigated. As previously commented, separate figures should be provided to better display the spatial distribution of samples collected for analysis of each chemical group.

Response: Figures showing analyte-specific sampling locations will be provided with the draft final RI report. No further sampling will be conducted.

6. **Comment:** **Section 8.4.2 – Nature and Extent of Chemicals in Groundwater.**

(A) **It is stated in the text that the extent of floating product (gasoline) is shown on Figure 8-2. This statement should be clarified, as there is no indication of floating product on Figure 8-2 or any other figures provided for Site 22. A map showing the estimated extent of floating product must be provided. In addition, the thickness of floating product must be determined in order to estimate a volume for evaluating remedial alternatives.**

Response: The extent of floating product will be added to the figure. The product thickness will not be discussed because remedial action of the floating product is ongoing under the TPH Program.

(B) **On FIGURE 8-4, TPH IN GROUNDWATER, the significance of drawing the plume boundary at 1,400µg/L should be noted on the map legend and explained in the text.**

Response: The draft final RI report will explain the nature and extent of TPH in groundwater, and the legend of the figure will be revised to include an explanation of the 1,400-µg/L plume boundary.

(C) **1,2-Dichloroethane. The extent of 1,2-DCA is described in this section. It was detected in 6 of 77 samples. However, 71 of the 77 samples were reported as non-detect with a detection limit greater than the PRG, with a maximum non-detect concentration of 130µg/L. Based on this data, the extent of 1,2-DCA is not defined. Additional sampling must be conducted to achieve appropriate detection limits in order to conduct a valid risk assessment.**

In addition, it is stated in this discussion of 1,2-DCA that because its presence is related to use as a gasoline additive, it will not be addressed further under CERCLA. This is an unacceptable approach

for addressing 1,2-DCA. It is a CERCLA chemical and must be addressed in this RI, regardless of how it got there.

Response: Achieving detection limits below the PRG for 1,2-DCA is not possible on a routine basis, especially for environmental samples that include matrix interferences. The samples were analyzed using EPA methods with detection limits that are as low as technically feasible in routine laboratories. The samples collected at Site 22 were analyzed by CLP laboratories to detection limits outlined by EPA protocol. Of the 77 samples analyzed for 1,2-DCA, 60 had detection levels of 1 µg/L or lower.

Site 22 also has petroleum-related contamination that produces matrix interference because many hydrocarbons elute at the same retention time as 1,2-DCA, resulting in elevated detection limits for 1,2-DCA. Seven samples have elevated detection limits (exceeding 50 µg/L) directly resulting from the petroleum contamination present at the site.

The use of 1,2-DCA as a petroleum additive is documented in the Agency for Toxic Substances Disease Registry (ATSDR) website. The conceptual site model for how compounds came to be present at the site presents a reasonable approach to site mitigation at Alameda Point.

(D) **<u>Trichloroethene</u>. The extent of TCE is described in this section. It is stated in the text that it was detected in 2 of 77 samples at a maximum concentration of 20µg/L. Like 1,2-DCA, 75 of 77 samples were reported as non-detect with a detection limit greater than the PRG, with a maximum non-detect concentration of 500 µg/L. Based on this data, the extent of TCE is not defined. Additional sampling must be conducted to achieve appropriate detection limits in order to conduct a valid risk assessment.**

Response: Achieving detection limits below the PRG for TCE is not possible on a routine basis, especially for environmental samples that include matrix interferences. The samples were analyzed with detection limits that are as low as technically feasible using routine EPA methods. The samples collected at Site 22 were analyzed by CLP laboratories to detection limits outlined by EPA protocol. Of the 77 samples analyzed for TCE, 51 had detection limits of 1 µg/L or lower.

Site 22 also has petroleum-related contamination that produces matrix interference because many hydrocarbons elute at the same retention time as TCE, resulting in elevated detection limits for TCE. Nine samples have elevated detection limits (exceeding 50 µg/L) directly resulting from the petroleum contamination present at the site.

(E) **Also, PCE and vinyl chloride had 71 and 77 of 77 samples, respectively, reported as non-detect with a detection limit greater than the PRG, and maximum non-detect concentrations of 500 and 130µg/L, respectively. Based on this data, the extent of PCE and vinyl chloride are also not defined. Additional sampling must be conducted to achieve appropriate detection limits in order to define the extent of VOCs in groundwater and conduct a valid risk assessment.**

Response: Achieving detection limits below the PRG for PCE is not possible on a routine basis, especially for environmental samples that include matrix interferences. The samples were analyzed with detection limits that are as low as technically feasible using routine EPA methods. The samples collected at Site 22 were analyzed by CLP laboratories to detection limits outlined by EPA protocol. Of the 77 samples analyzed for PCE, 51 had detection limits of 1 µg/L or lower.

Site 22 also has petroleum-related contamination that produces matrix interference because many hydrocarbons elute at the same retention time as PCE, resulting in elevated detection limits for PCE. Eight samples have elevated detection levels (exceeding 50 µg/L) directly resulting from the petroleum contamination present at the site.

(F) **Finally, no groundwater samples have been collected or monitoring wells installed at removed USTs 547-1,2, and 3, and near OWS-547. Additional sampling must be conducted, which achieves appropriate detection limits, in order to investigate the possible release of VOCs and metals in groundwater at these locations.**

Response: Groundwater samples have been collected at removed USTs 547-1, -2, and -3. Samples 547-L1 and 547-L8 were collected from the UST excavation. In addition, a remediation system was approved by the agencies and is operating at the site. No groundwater samples were collected around OWS 547 because the OWS was used to treat wastewater from the car wash to remove road grime from the water; therefore, it is unlikely to be a source of groundwater contamination. See the responses to the comments above regarding appropriate detection limits.

7. **Comment:** **<u>Section 8.5 – Fate and Transport</u>.**

(A) **It is stated in the text that there is no evidence to indicate the existence of a VOC plume at Site 22, and that the extent of TCE has been adequately defined. These statements are inappropriate for inclusion in this RI and must be removed. As previously pointed out in**

numerous comments, there are several lines of evidence to warrant further investigation of a possible chlorinated VOC plume beneath Site 22.

Response: The responses to the comments above show that proper investigation activities have been conducted and that the petroleum problems are the primary issue with groundwater at Site 22. The planned remedial action under the TPH Program will address the petroleum issues at Site 22. The text will not be removed.

8. **Comment:** **<u>Section 8.8 – Conclusions and Recommendations</u>. These will be addressed in comments on Section 10.0 -- Summary and Conclusions.**

Response: This comment is noted.

SITE 23 COMMENTS

1. **Comment:** **<u>Section 9.3.1 – Potential Sources</u>.**

(A) **All storm and sanitary sewers, and potentially leaky water supply lines must also be listed as potential sources for discharge of contaminants to soil and groundwater. The Storm Sewer Investigation, 2000 found that most of the sewers beneath Site 23 were partially submerged, evaluated repair needs, and recommended one segment for a low priority repair. However, this investigation did not involve investigating soil, soil gas, or groundwater sampling around the sewers. In addition, during the Supplemental Data Gap Sampling, 2001, one soil sample was collected from storm sewer bedding material, and contained elevated concentrations of TPH compounds, PAHs, and vinyl chloride.**

Response: See the response to General Comment No. 1 on page 1.

(B) **The 2nd part of this section discusses areas that are not considered to be sources. Petroleum hydrocarbon contamination associated with Building 529, 460A, ASTs 530A, B, and C, and all OWSs and GAPs is not considered to meet the definition of a CERCLA hazardous substance. Therefore, the Navy considers none of these areas or features to be a source under CERCLA. Analytical data must be provided for each of these areas and features to document that there were no CERCLA chemicals detected.**

Response: An appendix will be added to the draft final RI report to address RCRA evaluations of source structures and will document the absence of CERCLA chemicals.

(C) **The 8th bullet (page 9-14) under areas not considered potential sources discusses Structure 561, electrical substation 11 transformer pad, which contained less than 1 mg/L PCBs. The analytical data must be provided that documents the specific compounds and concentrations of PCBs detected at this transformer pad, and whether the samples were from soil or groundwater. The rPRG for the Aroclor series of PCBs is 220µg/kg for soil. A complete description must be provided of the sampling conducted to assess electrical substation 11.**

Response: The EBS investigation revealed that the transformer is labeled as containing less than 1 part per million (ppm) polychlorinated biphenyls (PCB). The RI investigated releases of hazardous substances using an iterative approach. There is no evidence that a release of oil ever occurred at Structure 561.

(D) **It is stated in the site history that Building 352 was used to store explosives, and that the western half of Site 23 was used as a staging area for planes, missiles, and bombs. The potential presence of explosive constituents in soil and groundwater should be listed as a potential source and discussed in the nature and extent sections.**

Response: Building 352 stored packaged explosives/warheads. No servicing or maintenance of the explosives was conducted. These facts will be included in the draft final report.

2. **Comment:** **<u>Section 9.3.2.1 – Analytical Data Evaluation - Soil.</u>**

(A) **The number of samples from each chemical group that were considered acceptable to describe the nature and extent of soil contamination is provided in this section. FIGURE 9-3 provides information about the location, type of sampling process used, and the phase of investigation in which the sample was collected. However, FIGURE 9-3 does not show which chemical analyses were conducted at each location, thereby displaying the spatial distribution of samples collected for each chemical group. Only FIGURE 9-5 provides the location information and spatial distribution of samples collected for the PAH chemical group. Separate figures should be provided for each chemical group to visually show the spatial distribution of sample locations and depths at which samples were collected for VOCs, SVOCs, and metals. Separate figures are needed to review the**

adequacy of site characterization for risk assessment relative to existing and former industrial and physical features. In addition, text boxes should accompany each sample location point, and contain the detected concentration, the detection limit achieved (if it was non detect), and the applicable rPRG or background threshold value.

Response: See the response to General Comment No. 4D on page 5.

(B) **It is stated in the last sentence of the 1st paragraph that laboratory detection limits for some chemicals exceeded rPRGs. Based on Table 9-3, it appears that most of the occurrences of a detection limit greater than an rPRG were for SVOCs. See General Comment No. 3.**

Response: See the response to General Comment No. 3 on pages 2 and 3.

3. **Comment:** **<u>Section 9.3.2.2 – Analytical Data Evaluation - Groundwater</u>.**

(A) **The number of samples from each chemical group that were considered acceptable to describe the nature and extent of groundwater contamination is provided in this section. Figures should also be provided to show the spatial distribution of samples collected for analysis of VOCs, SVOCs, pesticides/PCBs, and dissolved metals. All the figures should contain text boxes with sample depths or screen intervals, concentrations or detection limit (if non-detect), and the dates of sample collection. For all chemical groups, even if not determined to be risk drivers, separate figures help review the adequacy of site characterization for risk assessment relative to existing and former industrial and physical features.**

Response: See the responses to General Comment No. 4D on page 5 and Site 9 General Comment No. 3A on page 2. Tables for compounds identified as risk drivers will provide the collection depth of each sample.

(B) **It is stated at the end of the 1st paragraph that laboratory detection limits for some chemicals in groundwater exceeded the PRGs. Based on Table 9-4, numerous SVOCs and VOCs had detection limits greater than the PRGs in 50% or more of the samples. See General Comment No. 3.**

Response: See response to General Comment #3 (pages 2-3).

4. **Comment:** **<u>Section 9.3.2.3 – Analytical Data Evaluation – Soil Gas</u>. It is stated in this section one soil gas sample was collected at Site 23. The sample location, sample depths, and compounds detected should be discussed in this section or in the nature and extent discussion. Currently, soil**

gas information is found in Section 9.2.2 - <u>Supplemental Data Gap Investigation, 2001</u>. The location was sampled at two depths (1.5 and 4.0 feet bgs) to characterize all of Site 23. Chlorinated VOCs and BTEX compounds were detected in the samples. One soil gas sample location is not adequate to characterize the vadose zone site wide, evaluate risk, and provide adequate input for future indoor air modeling. In addition, the validity of a soil gas sample collected at 1.5 feet bgs is questionable due to near surface effects. A soil gas sampling plan must be developed to investigate soil gas in a systematic manner beneath open areas, beneath all sanitary and storm sewer lines, and potentially leaky water supply lines, near catch basins, OWS, and former ASTs at Site 23. All future soil gas sampling must achieve detection limits that are below the PRGs.

Response: See the response to General Comment No. 4E on pages 5 and 6.

5. **Comment:** **<u>Section 9.4. – Nature and Extent of Chemicals in Soil and Groundwater</u>. It is stated in this section that 1,2,4-TMB and sec-butylbenzene were detected at maximum concentrations of 860µg/L and 1,000µg/L. However, they are compounds associated with the petroleum plume, and are not being discussed further in this section. If this statement means they will not be evaluated under CERCLA as part of this RI, it must be removed. Regardless of whether these chemicals are related to a petroleum plume, they are CERCLA chemicals, they are part of an unacceptable cumulative health risk for Site 23, and must be further evaluated.**

Response: Because these compounds were detected at only two sampling locations each, the descriptions of these locations in the text address their nature and extent. When the analyte-specific figures are included in the draft final report, the evaluation will be easier. The compounds *are* included in the risk assessment and *are* presented in the noncancer risk table on Page 9-33. It should be noted that these compounds will be remediated as part of the current remediation of the petroleum plume in which these compounds reside.

6. **Comment:** **Section 9.4.1 – Nature and Extent of Chemicals in Soil.**

(A) **BaP Equivalents. It is stated in the text that BaP was detected above the action level of 1 mg/kg at one sampling location. FIGURE 9-5 must provide the reported concentrations greater than the rPRG value of 62µg/kg of BaP equivalents. Any concentrations detected at levels greater than 62µg/kg must be further evaluated.**

Response: Section 3 of the report states the following:

To evaluate the nature and extent of PAHs in soil at OU-2A, the Navy considered both the risk values calculated in the HHRA and ERA, as well as the risk based action level developed by the BCT. Benzo(a)pyrene (BaP) equivalents are calculated by multiplying the detected concentrations of the carcinogenic PAHs by appropriate toxicity equivalency factors. The toxicity equivalency factors are based on the carcinogenic potency of each compound relative to BaP (EPA 1993b). The seven carcinogenic PAH compounds and their toxicity equivalency factors are as follows.

CARCINOGENIC PAHs

AND TOXICITY EQUIVALENCY FACTORS

Compound	Toxicity Equivalency Factor
Benzo(a)pyrene	1.0
Benz(a)anthracene	0.1
Benzo(b)fluoranthene	0.1
Benzo(k)fluoranthene	0.01
Chrysene	0.001
Dibenz(a,h)anthracene	1.0
Indeno(1,2,3-c,d)pyrene	0.1

The risk based action level developed by the BCT is 0.62 mg/Kg. The section identified all samples that had detections greater than the BCT's risk based action level.

(B) **<u>Vinyl Chloride</u>. The nature and extent of this compound should be described in this section. In Section 9.2.2 - Supplemental Data Gap Investigation, 2001, the analysis of a storm sewer corridor soil sample contained elevated concentrations of PAHs and vinyl chloride. The concentration of vinyl chloride detected was not provided, and the extent of vinyl chloride along all the sewer corridors and in sewer system residues at site 23 should be investigated.**

Response: Vinyl chloride was detected in 1 out of 103 samples collected (sampling location S23-DGS-VE01 at 8.1 µg/L). Sample S23-DGS-VE02 was collected approximately 70 feet further downstream from sampling location S23-DGS-VE01 from within the sewer bedding of the storm sewer line leading to outfall J contained vinyl chloride at a concentration below 1 µg/L. It is likely that vinyl chloride was detected in the sample from S23-DGS-VE01 because of matrix interference caused by floating petroleum present in the area. Of the 103 groundwater samples analyzed for vinyl chloride, 94 had detection levels of 1 µg/L or lower. Vinyl

chloride is not a risk driver at Site 23; therefore, the "extent" of vinyl chloride should not be discussed.

(C) **<u>Total chromium and hexavalent chromium (CrVI)</u>. In Section 9.2.2 - Supplemental Data Gap Investigation, 2001, the analysis of one soil sample collected and analyzed for total chromium and CrVI is discussed. The concentration of neither total chromium nor CrVI is reported, it is only stated that a small portion of the total chromium was CrVI. In Table 9-3, no hexavalent chromium is reported. The actual detected concentrations of chromium and CrVI should be discussed in the nature and extent section. Furthermore, it is stated in Section 9.2.2 that the CrVI results were rejected based on zero recovery in the matrix spikes, and that any CrVI released to soil would immediately be reduced to trivalent chromium due to the reducing soil conditions. Total chromium and CrVI must be resampled at regular intervals in soil and groundwater around all storm and sanitary sewers. Also, the statement that CrVI would be immediately reduced in soil must be documented with analytical data, and geochemical evidence proving that an anaerobic soil environment is oxygen deficient enough to immediately reduce any and all chromium discharged to soil and groundwater.**

Response: The BCT reviewed and approved the supplemental data gap sampling work plan. The results of samples analyzed for hexavalent chromium are discussed in the supplemental data gap quality control summary report as follows: "The MS/MSD recovery of hexavalent chromium in soil was very low; however, the LCS was acceptable, which strongly suggests that the soil matrix is not supportive of hexavalent chromium. Hexavalent chromium results for samples 385-S21-021 and 385-S23-001 were qualified as estimated/nondetected (UJc) because of low MS recovery."

In addition to the lack of evidence suggesting a release of chromium at the site, an evaluation of reduction-oxidation data suggests that the prevailing reducing conditions in groundwater at Alameda Point makes the formation of hexavalent chromium extremely unlikely if not geochemically impossible (EPA 1999). The prevalence of reducing conditions in groundwater is supported by the presence of petroleum compounds such as naphthalene and benzene at Site 23 as well as the presence of the Bay Sediment Unit (BSU) organic layer below the water table.

(D) **The GSU believes the DQOs may not have been adequately met for Site 23 soils because it is not clear if the spatial distribution of soil data is sufficient to ensure confidence in risk assessment conclusions, especially for VOCs. In addition, further characterization of VOCs and metals in soil and groundwater should be conducted around all**

storm and sanitary sewer lines, and potentially leaky water supply lines, OWSs, catch basins, and manholes, which have not been previously investigated. As already commented, separate figures should be provided to better display the spatial distribution of samples collected for analysis of each chemical group.

Response: See the response to General Comment No. 4D on page 5.

6. **Comment:** **Section 9.4.2 – Nature and Extent of Chemicals in Groundwater.**

(A) **It is stated in the text that arsenic, BaP, benzo(b)fluoranthene, and ethylbenzene were identified in the risk assessment as COPCs. Arsenic is discounted as a COC because the Navy contends it is present at concentrations consistent with background concentrations. BaP is discounted as a COC because the Navy contends the detections were likely associated with sediment present in grab groundwater samples. As previously stated, if a risk is present, the chemical should be a COC and carried into the FS for further evaluation. As for BaP, documentation must be presented that the turbidity of the grab samples relative to monitoring well samples was beyond the acceptable range of turbidity, and that the grab samples are the ones causing the calculation of elevated risk. Furthermore, the use of unvalidated grab groundwater samples in risk assessment is not standard procedure and must be justified. Finally, there is the detection limit problem to address, as 9 of 9 BaP samples collected as a PAH for groundwater were non-detect with the detection limit two orders of magnitude greater than the PRG.**

Response: The draft final RI report will include a discussion of BaP in groundwater. The use of validated grab groundwater data was approved by the BCT.

(B) **On FIGURE 9-7, TPH IN GROUNDWATER, the significance of drawing the plume boundary at 1,400µg/L should be noted on the map legend and explained in the text.**

Response: The draft final RI report will explain the nature and extent of TPH in groundwater, and the legend of the figure will be revised to include an explanation of the 1,400-µg/L plume boundary.

(C) **Benzene. Based on the data provided, the extent of benzene is not defined in groundwater. In Table 9-4, 93 non-detects are greater than the PRG out of 102 total samples collected. A similar situation appears to have occurred for carbon tetrachloride, chloroform, TCE, and vinyl chloride, to name a few.**

Response: Benzene detection limits were 1 µg/L or lower for 90 of the 102 samples analyzed for benzene. The Navy has defined the extent of benzene in groundwater and is currently remediating benzene and associated petroleum contamination in groundwater at Site 23.

(D) **Ethylbenzene. It is stated in the text that there is no known source of ehtylbenzene west of Building 530, it is likely associated with the plume from Site 13, and it is possible that the nearby damaged storm sewer line served as the conduit for migration of contaminants. A separate plume map must be provided to display the extent of ethylbenzene. Obviously, this discussion is clear evidence that soil, soil gas, and groundwater around all sewer lines throughout Site 23 must be investigated. Numerous catch basins and manholes do not appear to have a soil and groundwater sample located in their immediate vicinity, and must also be investigated.**

Response: Ethylbenzene has historically been detected in the area west of Building 530 and in groundwater samples from MW530-1. Ethylbenzene was detected in MW530-1 at 79 µg/L in 1990 and at 3 µg/L in 2001 (see Table 9-7). Because there is no known source of petroleum hydrocarbon contamination in the northeast corner of Site 23, it is likely that these compounds are associated with the petroleum plume at Site 13.

The text states that ethylbenzene near the northeast corner of Building 530 may be originating from the southeast corner of Site 13. Samples of bedding material from sewer line J at two locations downstream of MW530-1 were analyzed for ethylbenzene, which was detected at concentrations below 1 µg/L at both locations. As stated in the response to General Comment No. 1 on page 1, a more detailed discussion of the sewer investigations will be included in the draft final RI report.

(E) **It does not appear that the DQOs have been adequately met for defining the nature and extent of chemicals in Site 23 groundwater. The spatial distribution of groundwater data is sufficient to ensure confidence in risk assessment conclusions. Plus, there are numerous areas in which additional investigation must be conducted.**

Response: The GSU states in this comment "The spatial distribution of groundwater data is sufficient to ensure confidence in risk assessment conclusions." But according to the comment above, the GSU also does not believe that the nature and extent of chemicals in groundwater have been defined. As demonstrated in the response to Site 23 Comments 6B (regarding vinyl chloride in groundwater) and 6C above (regarding benzene in groundwater), the nature and extent of chemicals at Site 23 has been sufficiently defined to move the site forward to an FS. Confirmation

sampling during ongoing soil and groundwater remediation will demonstrate that risk at the site has been mitigated.

7. **Comment:** **Section 9.5 – Fate and Transport.**

(A) **It is stated in the text that the fate and transport from plane defueling activities is not discussed because it is not a CERCLA chemical. As has been shown by these comments, the past disposal practices associated with missle reworking activities and all the sewers provide a high probability for the presence of numerous hazardous (CERCLA) constituents that have not been adequately investigated. Statements that deny the presence or possible presence of CERCLA chemicals at Site 23 are inappropriate for inclusion in this RI and must be removed. As previously pointed out in numerous comments, there are several lines of evidence to warrant further investigation of a chlorinated VOCs and dissolved metals beneath Site 23.**

Response: As demonstrated in the response to comment 6B (vinyl chloride in groundwater) and 6C (hexavalent chromium in soil), the data at Site 23 do not show the releases of CERCLA contamination. Data gaps associated with the TRW exist that can be addressed during the design phase of FS implementation.

COMMENTS ON RECOMMENDATIONS

Section 10.0 – Summary and Conclusions.

1. **Comment:** **<u>Site 9:</u> The Navy proposes no further action (NFA) for soil, and an FS to address human health risks (HHRs) from naphthalene, TCE, and vinyl chloride in groundwater. The GSU does not recommend concurrence with the NFA for soil because it is based on counting only risks not attributable to background metals. If background metals in soil pose a risk, they must be addressed.**

We do recommend concurrence with further evaluation of groundwater. However, moving to the FS stage at this time is premature, as there are many unresolved characterization issues for soil and groundwater, and therefore, for risk assessment issues as well.

Response: See the response to General Comment No. 9 on page 9 regarding background metals. The Navy does not believe that characterization issues exist at Site 9, and believes that it is appropriate to move Site 9 forward to an FS.

2. **Comment:** **<u>Site 13:</u> The Navy proposes an FS to address soil, groundwater, and floating product at Site 13. The GSU recommends concurrence with further evaluation of soil, groundwater, and floating product. However, moving to the FS stage at this time is premature, as there are many unresolved characterization issues for soil and groundwater, and therefore, for risk assessment issues as well.**

Response: The Navy acknowledges that some data gaps exist at Site 23 (particularly regarding the TRW) but believes that the gaps can be addressed during the design and data collection phase of FS implementation.

3. Comment: **<u>Site 19</u>: The Navy proposes NFA for soil, and an FS to address HHRs from PCE, TCE, and 1,2-DCP in groundwater. The GSU does not recommend concurrence with the NFA for soil because it is based on counting only risks not attributable to background metals. If background metals in soil pose a risk, they must be addressed.**

We do recommend concurrence with further evaluation of groundwater. However, moving to the FS stage at this time is premature, as there are many unresolved characterization issues for soil and groundwater, and therefore, for risk assessment issues as well.

Response: See the response to General Comment No. 9 on page 9 regarding background concentrations of metals. The Navy does not believe that characterization issues exist at Site 19 and believes that it is appropriate to move Site 19 forward to an FS.

4. **Comment:** **<u>Site 22</u>: The Navy proposes an FS to address elevated lead in soil, and NFA for groundwater under CERCLA. The GSU recommends concurrence with further evaluation of soil. However, moving to the FS stage at this time is premature, as there are many unresolved characterization issues for soil and groundwater, and therefore, for risk assessment issues as well.**

The GSU does not recommend concurrence with NFA for groundwater under CERCLA. Numerous hazardous constituents present in groundwater at Site 22 are CERCLA chemicals and must be further evaluated under CERCLA, not the TPH Program.

Response: See the response to General Comment No. 9 on page 9 regarding background concentrations of metals. The Navy is moving forward with remediation of petroleum issues at Site 22 under the TPH Program. The site was used as a barracks and as a gasoline station, and all records show

that these were the only site uses. The Navy believes that it is appropriate to remediate a gasoline station under the TPH Program and that two detections of chlorinated hydrocarbons in groundwater at a site does not meet the standard for a commingled groundwater plume. In the absence of a commingled plume, petroleum and its constituents are excluded from CERCLA. The Navy believes that it is appropriate to move soil at Site 22 forward to an FS.

5. **Comment:** **Site 23: The Navy proposes an FS to address PAH in soil. The GSU recommends concurrence with further evaluation of soil. However, moving to the FS stage at this time is premature, as there are many unresolved characterization issues for soil and groundwater, and therefore, for risk assessment issues as well. In addition, the risk attributable to arsenic in soil must not be subtracted from the total incremental risk.**

For groundwater, the Navy proposes NFA for groundwater under CERCLA. The GSU does not recommend concurrence with NFA for groundwater under CERCLA. Numerous hazardous constituents present in groundwater at Site 23 are CERCLA chemicals and must be further evaluated under CERCLA, not the TPH Program.

Response: The Navy is moving forward with remediation of petroleum issues at Site 23 under the TPH Program. The site was used for plane defueling, and a large petroleum plume in groundwater is defined. The Navy believes that it is appropriate to move soil at Site 22 forward to an FS.

CONCLUSIONS

In summary, additional soil and groundwater data and maps must be presented to accurately evaluate the extent of characterization conducted, and to support risk assessment. In addition, significant justification of the representativeness of the groundwater data collected, particularly for VOCs, must be provided. Plus, little to no discussion is provided about the vertical extent of contamination. The data available for the SWBZ must be clearly presented, and the relationship between the vertical extent of contamination in the FWBZ relative to the SWBZ must be unequivocally established. Finally, comprehensive soil gas sampling must be conducted at all sites in OU-2A to evaluate indoor air risk in the HHRA. All required investigative work should be conducted as part of this RI, not deferred to a future FS effort.

Response: Additional data tables and figures will be provided in the draft final RI report to better demonstrate that these sites have been adequately characterized.

References

Tetra Tech EM Inc. (Tetra Tech). 2001. "Final Field Sampling Plan Supplemental Remedial Investigation Data Gap Sampling for Operable Units 1 and 2." June 14.

U.S. Environmental Protection Agency (EPA). 1988. "Guidance for Conducting Remedial Investigations and Feasibility Studies Under CERCLA." EPA/540/G-89/004.

EPA. 1999. "Understanding Variation in Partition Coefficient, K_d, Values Volume II: Review of Geochemistry and Available K_d Values for Cadmium, Cesium, Chromium, Lead, Plutonium, Radon, Strontium, Thorium, Tritium (^3H), and Uranium." EPA 402-R99-004B. August.

RESPONSES TO OMF COMMENTS ON THE DRAFT OU-2A REMEDIAL INVESTIGATION REPORT, SITES 9, 13, 19, 22, AND 23 ALAMEDA POINT, CALIFORNIA, FEBRUARY 26, 2004

This document presents the U.S. Department of the Navy's (Navy) responses to comments from the Office of Military Facilities (OMF) on the "Draft Remedial Investigation Report, Sites 9, 13, 19, 22, and 23, Operable Unit 2A (OU-2A), Alameda Point, Alameda, California," dated February 26, 2004. The Navy received the comments addressed below from OMF on July 2, 2004.

Potential AOCs

1. **Comment:** **DTSC reiterates that all current and former buildings, structures, and site features including subsurface conduits and open spaces must be sufficiently evaluated before concluding that they are *not* potential areas of concerns (AOCs) (see DTSC correspondences dated December 16, 2002 and April 11, 2003). The evaluation may be based on preliminary review and visual site inspection conducted in accordance with RCRA Facility assessment (RFA) and CERCLA Preliminary Assessment/Site Inspection (PA/SI) and does not necessarily have to involve intrusive sampling.**

   Statements such as "Two USTs, 616-1 and 616-2, were built for spill containment/emergency overflow but have never contained hazardous waste; they are not believed to be a source" (page 7-10) are far too simplistic to be considered acceptable for a remedial investigation (RI) report. They must be substantially expanded and substantiated.

   Response: The remedial investigation (RI) evaluated evidence of releases to the soil and water of California. If no evidence of release was found during the environmental baseline survey (EBS) sampling, Resource Conservation sand Recovery Act (RCRA) evaluations, or the RI process, no additional sampling was deemed necessary. The RI used information gathered during the EBS investigation to determine if specific areas of concern (AOC) should be sampled. The draft final RI report will be revised to include an evaluation of solid waste management units (SWMU) in an appendix. The evaluation will include a summary of field observations or sampling conducted around each SWMU.

   Underground storage tanks (UST) 616-1 and 616-2 were closed in place, so no samples could be collected from below the USTs. Five soil samples collected from sampling location BD13-5 within 25 feet of the USTs were analyzed for volatile organic compounds (VOC) . Groundwater samples from monitoring well 372-MW2 located 25 feet downgradient from the

USTs were also analyzed. No evidence of CERCLA contamination was observed at these sampling locations.

Storm Sewers and Sanitary Sewers

2. **Comment:** **Storm sewer at Alameda Point was previously Installation Restoration (IR) site 18. It was later reconfigured to allow each section of the sewer be evaluated within the associated IR site. Given that storm sewer was used for industrial waste disposal prior to 1972 (page 3-4), it must be considered as a potential AOC and adequately evaluated at each site.**

   Response: The draft final RI report will include more detail about the evaluation of storm sewers.

3. **Comment:** **Any pertinent data and/or findings including recommendations from the 2000 storm sewer investigation must be included in this RI. For clarity, please indicate if the data have been validated, if the agencies have concurred on the findings and if the recommendations have been followed through.**

   Response: See the response to Comment No. 2 above.

4. **Comment:** **Sanitary sewer was also reportedly used for industrial waste disposal (e.g. page 5-22). Therefore, it must also be considered as a potential AOC and adequately evaluated at each site.**

   Response: Sanitary sewers used to dispose of industrial waste (Site 9) were evaluated. See the response to Comment No. 2 above.

5. **Comment:** **Sewer lines can act as preferential pathways for the migration of groundwater plumes and/or soil gases. Such potential must be evaluated for each of the five IR sites addressed in this RI.**

   Response: See the response to Comment No. 2 above.

RCRA Corrective Actions

6. **Comment:** **DTSC is currently considering the Navy's proposal to integrate RCRA corrective action, specifically RCRA Facility Investigation (RFI), through the coordination of other ongoing programs, including the total petroleum hydrocarbon (TPH) program and the CERCLA program. It is therefore incorrect to state, "RCRA RFIs *were***

implemented through .... the TPH program and the CERCLA program" (e.g. page 6-5).

Response: The draft final RI report will be revised to include an evaluation of SWMUs in an appendix. The evaluation will include a summary of field observations or sampling conducted around each SWMU.

7. **Comment:** **Under the proposed RCRA/CERCLA integrated approach, RI together with the TPH investigation will be considered functional equivalent to RFI and used as the basis for corrective action termination determination. Petroleum substances, though not considered CERCLA contaminants, are regulated under RCRA (see DTSC correspondence dated December 16, 2002). TPH investigation results must therefore be included, or otherwise specifically referenced, in the RI ("specifically referenced" means pages containing the relevant information are identified and the date of agency concurrence noted; also see Comment #10).**

Response: Additional discussion of total petroleum hydrocarbon (TPH) contamination at each site will be included in the draft final RI report. A separate appendix will be included that describes the RCRA evaluation.

8. **Comment:** **The total number of solid waste management units (SWMUs) or areas of concerns (AOCs) at Alameda Point exceeds the originally142 listed in the Permit or 152 identified in the RCRA Facility Assessment (RFA). For clarity, please provide a list of SWMUs for each IR site addressed in this RI (DTSC considers all AOCs as SWMUs and vice versa). Please note permitted hazardous waste management units (i.e ISD and/or Part B units) are considered SWMUs (see December 16, 2002 DTSC comment letter).**

Response: The draft final RI report will be revised to include an evaluation of SWMUs in an appendix. The evaluation will include a summary of field observations or sampling conducted around each SWMU.

9. **Comment:** **Closure of SWMUs via an integrated RCRA and CERCLA approach requires that all relevant sampling results and associated maps be included or otherwise specifically referenced in the RI (see Comments #7 and #10). Also considered necessary is pertinent unit closure information such as unit description, process schematics, operation history, and closure activities performed to date. This applies to all SWMUs including those already received agency concurrence on certification for closure or no further action (NFA).**

Response: See the responses to Comments No. 1 and 6 on pages 1 and 3.

10. **Comment:** **Due to the difficulty of locating various earlier documents, DTSC strongly recommends that all sampling data associated with SWMU closure are included, rather then referenced, in the RI.**

Response: The draft final RI report will summarize the data used to evaluate the SWMUs and reference closure documents and concurrence.

TPH Program

11. **Comment:** **Conclusive evidence including sampling results of compounds other than BTEX must be presented when asserting that a particular investigative area contains only petroleum contaminants and therefore should be addressed in the TPH program.**

Response: The plumes were evaluated as TPH only based on two factors: (1) the evaluation of the plume for other chemicals of concern based on whether they were risk drivers or used on site and on evaluation of sources or release mechanisms; and (2) the conceptual model for the site, including site history, release history, and pathways. The Navy feels that an exhaustive discussion of this evaluation would distract the reader from the main issues and make an already large document more cumbersome to read and understand.

12. **Comment:** **Appendix F of this RI discusses the TPH results of IR sites 9, 13, 19, and 23. Please clarify agency concurrence on the contents of this appendix.**

Response: The Navy prepared Appendix F in accordance with the agency-approved methodology for TPH evaluations at Alameda Point. The California Regional Water Quality Control Board, San Francisco Bay Region (RWQCB), did not include concurrence on specific evaluations in Appendix F in its comments on the RI report.

13. **Comment:** **IR site 22 is reportedly evaluated in the Corrective Action Plan for CAA 4C dated January, 2004. Please discuss agency concurrence on this document.**

Response: The draft final RI report will include a discussion of the RWQCB's concurrence and reference the concurrence letter.

Data Quality

14. **Comment:** **RI should be a technically rigorous and legally defensible document. To achieve that, all sampling results included in the RI must be validated. Should inclusion of certain un-validated data be unavoidable, efforts must be made to explicitly flag such data and to address the uncertainty such data may bring to the discussion of nature and extent, fate and transport, and human and ecological risk evaluation.**

Response: Validated and unvalidated data were generated by most of the investigations conducted at Alameda Point. The number of validated and unvalidated data by site and media are presented in the response to the U.S. Environmental Protection Agency (EPA) General Comment No. 2.

Regarding the use of a subset of data for the risk assessments, most unvalidated data excluded from the risk assessment datasets consists of groundwater data. The Navy believes that the validated data sufficiently represent current site conditions and that the use of this data subset tends to be more protective.

The RI uses unvalidated data to assist in characterizing the extent of a contaminant determined to pose a risk. This approach does not undermine the defensibility of the RI because it conforms with the additional RI objective of supporting the feasibility study (FS), which needs to estimate the extent of the problem.

15. **Comment:** **All sites addressed in this RI have gone through various investigations. For clarity, please indicate for each IR site which previous investigations have generated validated data. We suggest that a short summary (e.g. a short table) be included in Sections 6.2, 7.2, 8.2, 9.2 and 10.2. for this purpose.**

Response: The Operable Unit (OU)-2A RI report is a cumbersome document because of the volume of information that must be explained. The additional tables will not be provided, because they would not significantly improve the document.

16. **Comment:** **For report clarity and conciseness, please consider to "weed out" historical data that are not validated or otherwise judged to be of insufficient quality (e.g. high detection limits).**

Response: All data collected during the investigation of OU-2A will be used to assist in characterizing the site except for rejected data. The age and validation

status of some data may render the data inappropriate for inclusion in the risk assessment but still useful in evaluating the nature and extent of contamination at the sites. No data will be "weeded out" of the RI.

Remedial Investigation Approach

17. **Comment:** **The remedial investigation approach adopted by this RI is similar to that used in OU 1 RI (Sites 6, 7, 8 and 16) and is, therefore, problematic. We strongly recommend that the following revisions be made when producing the next draft (Site 28 RI report may be consulted for this purpose):**

- **Establish site-specific data quality objectives (DQOs) for each of the five sites;**
- **Establish the screening levels and ensure they are consistent with those used at other Alameda Point sites;**
- **Clearly explain the criteria for selecting chemicals to be detailed in the nature-and-extent discussion (i.e. chemicals of interest or chemicals of concern (COCs)) and make sure the criteria are used consistently across the Base;**
- **Clearly explain the criteria for determining which chemicals to be evaluated in the risk assessment (i.e. chemicals of potential concerns (COPCs)) and make sure the criteria are used consistently across the Base;**
- **Clearly explain how risk drivers are selected and make sure the criteria are used consistently throughout the Base;**
- **Stop using "chemicals believed to have been used" as a criterion for selecting or identifying COCs or COPCs;**
- **Review detection limits against the screening level for all data to be included in the RI and flag those with detection limits exceeding the established screening levels;**
- **Ensure all data included in the RI are validated (If this is not feasible, make sure all un-validated data are clearly flagged and the resulted uncertainty be specifically discussed).**

Response: With regarding to the approach being inconsistent with other Comprehensive Environmental Response, Compensation, and Liability Act (CERCLA) sites (IR-28), the approach to preparing an RI must adapt

to the site-specific conditions. Every RI report will not look the same because there is no "one size fits all" template that will meet the requirements for every site. An RI report must meet the requirements of the National Oil and Hazardous Substances Pollution Contingency Plan (NCP) and CERCLA. In addition, the RI for Sites 9, 13, 19, 22, and 23 must address the presence of RCRA and TPH activities, unlike the IR-28 RI. Because of the presence of RCRA and TPH activities at the sites, it was necessary to add more detail regarding the various investigations and site features for Sites 9, 13, 19, 22, and 23.

"Screening levels" were determined by conducting a risk assessment, which is consistent with the requirements of the NCP and CERCLA (see the response to EPA General Comment No. 34).

The RI report does not address "only" chemicals believed to have been used at the site and is not a primary criterion in deciding which chemicals to address in the report. It is merely an evaluation included in the report. The process used to evaluate the data in support of the CERCLA risk management process included (1) a site-specific conceptual site model (CSM), (2) a background comparison, (3) nature and extent evaluations, (4) fate and transport evaluations, (5) a human health risk assessment (HHRA), and (6) an ecological risk assessment (ERA). Nature and extent evaluations address chemicals believed to have been used at the site and chemicals identified as risk drivers. Because many of the chemicals posing most of the risk are not believed to have been used at the site or are not consistent with the types of activities known to have occurred, this additional evaluation was conducted to be more thorough. Text in the draft final RI report regarding the nature and extent approach will be revised to clarify this approach.

Unlike IR-28, data for Sites 9, 13, 19, 22, and 23 were collected over many years during various EBS, TPH, and CERCLA investigations for many more constituents of interest. Only one EBS and one CERCLA investigation were conducted at IR-28. Because of the volume of data for Sites 9, 13, 19, 22, and 23 collected over a long period of time, many of the approaches used in the RI for IR-28 as well as the RIs for Sites 14, 15, and 26 were not practical for this RI. For example, if data were posted on figures for every chemical detected above the residential preliminary remediation goals (PRG), the RI report would be much longer; therefore, the nature and extent of chemicals believed to be used at the site and risks were characterized instead, consistent with the NCP and EPA guidance (see the response to EPA's General Comment No. 4). It should also be noted that data for the CERCLA investigation conducted for IR-28 had not been previously published. All data used in the RI for Sites 9, 13, 19, 22, and 23 are published in other documents.

In addition, it was not appropriate or practical to use all validated data in the risk assessments because the data were collected over many years and because all data are not reflective of current site conditions, and the objective of the risk assessments is to assess potential current and future risk; however, consistent with IR-28, EBS data were not included in the risk assessments. Because much fewer chemicals were evaluated in the HHRA for IR-28, it was more practical to limit the chemical of potential concern (COPC) screening to essential nutrients only; however, this approach was not practical for OU-2A, and the COPC screening implemented is consistent with EPA guidance.

Sampling Adequacy/Existence of Data Gap

18. Comment: **The way the data are presented in this RI is similar to that used in OU 1 RI and is therefore difficult to follow. To help determine if the subject sites have been adequately sampled, we strongly recommend that separate maps be presented to show the sampling locations, depths, dates, and contaminant levels for each medium sampled (i.e. soil, groundwater, and soil gas) and each group of COCs identified (e.g. VOCs, SVOCs, PCBs, and metals). Site 28 RI, again, may be consulted for this purpose.**

Response: Additional figures showing sampling locations by analytical group will be included in the draft final RI report.

Source of Groundwater Contamination

19. Comment: **Every effort should be made to locate the source for groundwater contamination. DTSC reiterates that for any given groundwater plume, it is prudent to assume that the source or sources exist –either as free phase or adsorbed phase and either in the vadose zone or in the saturated zone – and continue to contribute to groundwater contamination (see OU 1 comment letter dated May 28, 2004). To effectively remediate it, the identification of the source area is essential. To avoid addressing it in the RI or to conclude it is "gone" or non-existent without strong supporting evidence is totally unacceptable.**

Response: The conceptual site model (CSM) for each site develops the assumed source of soil or groundwater contamination. The site-specific release mechanisms, history, and conditions determine if it should be assumed that free-phase or adsorbed-phase source material remains at the site. For example, at Site 9, the release was most likely through sewer lateral lines directly to groundwater. The highest concentrations of primary

contaminants remain around the sewer later lines, and higher concentrations of breakdown components are detected downgradient. Although some petroleum source material remains around the sewer laterals, there is no evidence to suggest that dense nonaqueous-phase liquid (DNAPL) remains at the site.

Nature and Extent of Contamination

20. Comment: **The review of nature and extent of contamination cannot be completed at this time due to the problems noted in data quality and remedial investigation approach (see Comments # 14 and 17).**

Response: See the responses to Comments 14 and 17 on pages 5 and 6 through 10 for an explanation of why the data quality and approach are consistent with EPA and NCP guidelines.

Fate and Transport

21. Comment: **The discussion of the degradation of contaminants has been too simplistic to be considered acceptable for a RI. Please refer to GSU comments for details.**

Response: Because every site is recommended for remedial action (either under CERCLA or the TPH Program), an exhaustive discussion of degradation process is not appropriate for the RI. The FS will discuss the degradation modeling.

22. Comment: **The RI has not provided any discussion on the transport of contaminants. Please provide it.**

Response: The RI discusses the groundwater flow direction and the hydraulic gradient. Navy has adopted an empirical approach to groundwater transport. There is little benefit from groundwater modeling at this time. Maps showing the extent of contamination migration and the CSM explain the process of groundwater transport.

Risk Assessment

23. Comment: **The review of human and ecological risk assessment cannot be conducted at this time due to various data quality problems and problems noted in the remedial investigation approach (see Comments #14 and 17).**

Response: See the responses to Comments 14 and 17 on pages 5 and 6 through 10 for an explanation of how the data quality and approach are consistent with EPA and NCP guidelines.

Conclusions and Recommendations

24. Comment: **The review of conclusions and recommendations (i.e.Chapter 10) can not be conducted at this time due to the various problems noted above.**

Response: Please see the responses to the previous comments and provide comments on the RI report conclusions.

RESPONSES TO RWQCB COMMENTS ON THE DRAFT OU-2A REMEDIAL INVESTIGATION REPORT, SITES 9, 13, 19, 22, AND 23, ALAMEDA POINT, CALIFORNIA, FEBRUARY 26, 2004

This document presents the U.S. Department of the Navy's (Navy) responses to comments from the California Regional Water Quality Control Board, San Francisco Bay Region (RWQCB), on the "Draft OU-2A Remedial Investigation Report, Sites 9, 13, 19, 22, and 23, Alameda Point, Alameda, California," dated February 26, 2004. The Navy received the comments addressed below from RWQCB on July 2, 2004.

Responses to RWQCB Comments

Overall Concerns

1. **Comment:** **For all five sites, the draft RI used detection limits greater than the previously agreed upon preliminary remediation goals (PRGs) for soil, groundwater, and soil gas monitoring. Some of these detection limits were also greater than standard laboratory reporting limits. As a result, many chemicals of concern were reported as "not detected (ND)" and removed from further risk evaluation. This invalidated many risk evaluation conclusions. Please conduct additional data gap sampling using appropriate detection limits.**

   Response: Detection limits will be more thoroughly addressed in the draft final remedial investigation (RI) report; however, the Navy does not believe there is a problem with the data. Many of the analytical methods used over the past 10 years, when much of the sampling at these sites was conducted, have since been superseded because the former methods were not capable of achieving the detection limits needed for comparison with many recently established preliminary remediation goals (PRG).

2. **Comment:** **On some of the sites, groundwater and soil contamination were not delineated. Individual sampling location results were reported, but no efforts were made to establish the extent of the contamination. This was particularly noticeable at Site 23 with the tarry refinery waste. Please delineate the area of contamination.**

   Response: The figures in the draft report show the known extent of contamination at Operable Unit (OU)-2A. On all figures showing the nature and extent of groundwater contamination, a plume line showing the extent of detected contamination is included. In some cases, the line is dashed to show that the extent is inferred. If soil sample results show an area of elevated concentrations bounded by lower concentrations, then the extent of soil contamination is delineated. Because of the limited information available

to define the limits of the tarry refinery waste (TRW), the extent was based on the concentrations of benzo(a)pyrene (BaP) equivalents in soil and a review of soil boring logs showing black staining. The extent of TRW at Site 23 is depicted within a shaded area.

3. **Comment:** **On all sites the aquatic ecological risk assessments were incomplete. The storm sewer bedding material pathways were not evaluated. The draft RI recognized that many of the storm sewers are in groundwater and have breaks and leaks that need to be repaired. Yet the draft RI contained no discussion on the potential for the storm sewer bedding material as a preferential discharge pathway to Sea Plane Lagoon. Please include a discussion of the storm sewer bedding as a preferential pathway.**

Response: The Navy evaluated the storm sewer bedding pathway in the RI and will clarify the results of that evaluation in the draft in final RI report. The storm sewers main lines at OU-2A were evaluated, and the conditions of the lines are presented graphically in the figures. The draft final RI report will demonstrate that samples collected from the storm sewers show that contamination is not being transported from the sites to Seaplane Lagoon through the storm sewers. Related discussions will be included in the draft final RI report, and the ecological risk assessment (ERA) will not be changed to include evaluation of risk to aquatic receptors.

Specific Comments

1. **Comment:** **Page 8-32, Section 8.8.2 Risk Assessments Conclusions and Recommendations, Last Paragraph: This paragraph states "[b]ased on the limited detection frequencies of CERCLA compounds, and risk within the risk management range [for the detected compounds], and the planned remedial activity at Site 22, no further action is recommended for groundwater at Site 22." If remedial activities are planned, how can no further action be recommended for the site? Please clarify.**

Response: The text will be revised to read as follows:

Site 22 groundwater risk is largely attributed to exposure to petroleum-related compounds through vapor intrusion and domestic use of groundwater. A petroleum removal action is ongoing at Site 22 to address these concerns. Carcinogenic risk from CERCLA compounds in groundwater at Site 22 is likely attributable to spurious detections of TCE and PCE within the petroleum plume. Groundwater at Site 22 is recommended for further evaluation in a FS.

2. **Comment:** **Page 9-23, Section 9.5 Fate and Transport, TRW (Tarry Refinery Wastes) in Soil at Site 23, Second paragraph: This paragraph stated that "[l]ow pH environment may cause lead in the material to dissolve in the groundwater and become mobile. Commingling of the TRW with jet fuel, diesel fuel, or gasoline will cause the TRW to dissolve and become mobile in the groundwater. Based on the data collected at Site 13 just north of where the black material was identified at Site 23, the material at Site 23 is not commingled with free product petroleum hydrocarbons; therefore, it is not likely mobilizing in the groundwater." First, based on the draft RI, TRW has low pH. Therefore, lead in the TRW should be mobile in the groundwater and should be addressed as a chemical of concern. Second, petroleum hydrocarbons are found co-located in groundwater with TRW in the northern portion of Site 23 (please see results of MW 530-1). Please clarify how the presence of petroleum hydrocarbon in this case doesn't indicate dissolution of TRW and mobilization of TRW constituents in the groundwater.**

Response: The text will be revised to accurately reflect that elevated lead concentrations in groundwater have been characterized but not fully bounded near the highest detected lead concentration of 1,770 micrograms per liter (µg/L). The high concentrations of lead were detected at B-IMF-09. A groundwater sample from M-IMF-01, located approximately 30 feet southwest (immediately downgradient) of B-IMF-09 contained 1.5 µg/L lead. A sample from M13-06 located approximately 80 feet west of B-IMF-09 contained less than 0.23 µg/L lead. The maximum contaminant level (MCL) for lead in groundwater is 15 µg/L. Based on the data collected for Site 13, the limits of lead in groundwater have been defined and significant mobilization of lead is not occurring.

APPENDIX K
AGENCY LIST OF DATA GAPS FOR THE OPERABLE UNIT 2A REMEDIAL INVESTIGATION REPORT

Agency List of Data Gaps for the Operable Unit 2A Remedial Investigation Report

In addition to the comments provided on the Draft RI Report for OU-2A (see Appendix J), the US Environmental Protection Agency identified several issues that they requested the Navy to address in future stages of the CERCLA process. These issues are included in this appendix as Attachment 1.

All of the sites within Operable Unit 2A have been recommended for further evaluation in the feasibility study. Rather than conducting additional data gap investigations and revising the remedial investigation report, the regulatory agencies and the Navy will address the issues discussed in the Appendix in subsequent CERCLA documents including the feasibility study, the proposed plan, record of decision, and remedial design. The public will have ample opportunity to comment on the issues identified by the regulatory agencies in subsequent CERCLA documents.

ATTACHMENT 1

Operable Unit 2A Information to be Included in the Draft Final Remedial Investigation Report

General Corrections:

1. In the opinion of the regulatory agencies the risk for each site has been consistently underestimated. However, all sites that need action are going forward into the Feasibility Study so that the end result of the risk assessment yields a course of action we all agree on.

2. Ingestion of homegrown produce must be considered.

3. The agencies believe Nature and Extent discussions are incomplete, but the data gaps remaining will be addressed as a component of the Remedial Design for each site.

4. The agencies believe Fate and Transport discussions are incomplete, but since each site will undergo remediation, the fate and transport issues will be addressed through clean up.

5. The list of issues that need to be addressed in the Remedial Design phase of the project will be carried through to the Feasibility Study Report and the Record of Decision so that no concerns will fall through the cracks as the clean up process moves forward.

6. The RAB and the community will have an opportunity to review the Remedial Design Workplan to ensure that the workplan captures and investigates all nature and extent and data gap concerns.

7. Include all information compiled on the status of RCRA regulated units and SWMUs for DTSC.

Site 9:

- Soil and groundwater beneath all oil water separators and the washdown area needs to be sampled for metals, PCBs/Pesticides, and VOCs. Any soil contamination that is acting as a continuing source of contamination to groundwater must be remediated.

- Arsenic, aluminum, and lead levels in the soil are higher than background and a source for these metal contaminants should be found.

- The groundwater plume needs better vertical and lateral delineation. Groundwater samples should be analyzed for VOCs, SVOCs, metals, and PCBs. Include 1,4 dioxane and methylene chloride in the analyses.

Site 13:

- Soil in the west and northwestern portion of the site needs further sampling for lead.

- The location of the former incinerator must be found and soil samples taken in the location. Samples must be analyzed for metals and dioxins and furans.

- Soil and groundwater beneath all oil water separators need to be sampled for metals and VOCs. Any soil contamination that is acting as a continuing source of contamination to groundwater must be remediated.

- Additional groundwater samples should be taken and analyzed for PAHs, VOCs, and metals, using detection limits below the PRGs.

Site 19:

- Groundwater contamination needs to be delineated further so that the plumes boundaries reflect detected concentrations at or below the PRGs. Soil and groundwater samples in the southern portion of the site should be taken and analyzed for VOCs. Include 1,4 dioxane in the analyses due to the presence of TCE in groundwater.

- The solvent storage area in the northwestern part of Yard D-13 must be sampled in the soil and groundwater beneath it and samples should be analyzed for VOCs and metals.

Site 22:

- Soil and groundwater beneath all oil water separators needs to be sampled for metals and VOCs. Any soil contamination that is acting as a continuing source of contamination to groundwater must be remediated.

- Potential sources of arsenic and lead in soil must be investigated.

- Additional groundwater samples should be taken and analyzed for SVOCs, VOCs, and metals, using detection limits set below the PRGs.

Site 23:

- Soil and groundwater beneath all oil water separators needs to be sampled for metals and VOCs. Any soil contamination that is acting as a continuing source of contamination to groundwater must be remediated.

- Groundwater near GAP 64 needs to be further characterized for VOCs