N00217.003880
HUNTERS POINT
SSIC NO. 5090.3

FINAL
POST-CONSTRUCTION REPORT

SITE IR 1/21 INDUSTRIAL LANDFILL GROUNDWATER EXTRACTION SYSTEM/ CONTAINMENT BARRIER

HUNTERS POINT NAVAL SHIPYARD
SAN FRANCISCO, CALIFORNIA

Contract N62474-93-D-2151
Delivery Order 0060

Submitted to:

Department of the Navy
Engineering Field Activity, West
Naval Facilities Engineering Command
900 Commodore Drive, Building 208
San Bruno, California 94066-2402

Submitted by:

IT Corporation
4585 Pacheco Boulevard
Martinez, California 94553

July 1999

Table of Contents

List of Tables iii

List of Appendices iv

List of Acronyms v

1.0 Introduction 1-1
- 1.1 Site Description 1-2
- 1.2 Project Objectives 1-2
- 1.3 Report Format 1-2

2.0 Project Summary 2-1
- 2.1 Summary of Phase I Activities 2-2
  - 2.1.1 Project Plans and Permits 2-2
  - 2.1.2 Phase I PreConstruction Meeting Prior to Mobilization 2-2
  - 2.1.3 Initial Surveying - Site Layout 2-3
  - 2.1.4 Underground Utility Clearance 2-3
  - 2.1.5 Cone Penetrometer Testing - Geotechnical Data Collection 2-3
  - 2.1.6 Hydropunch Sampling 2-4
  - 2.1.7 Test Sheet Piles 2-5
  - 2.1.8 Preliminary Corrosion Testing 2-5
  - 2.1.9 Storm Sewer Video Survey 2-6
  - 2.1.10 Sanitary Sewer Video Survey and Cleaning 2-6
  - 2.1.11 Preparation of the Design Submittal 2-7
- 2.2 Summary of Phase II Activities 2-7
  - 2.2.1 Sheet Pile Installation 2-8
  - 2.2.2 Cathodic Protection Testing 2-12
  - 2.2.3 Groundwater Extraction System Construction 2-12
    - 2.2.3.1 Northern Collection System Extraction Wells 2-13
      - 2.2.3.1.1 Extraction Pumps and Level Sensors Installation 2-15
      - 2.2.3.1.2 Extraction Well Pumps 2-15
    - 2.2.3.2 Northern Collection System Installation 2-15
    - 2.2.3.3 Southern Extraction Trench Installation 2-17
      - 2.2.3.3.1 Collection Trench Sump Pumps and Level Sensor Installation 2-18
      - 2.2.3.3.2 Collection Trench Sump Pumps 2-18
    - 2.2.3.4 Southern Collection System Installation 2-18
  - 2.2.4 Collection/Monitoring Pad and Instrumentation Installation 2-20
  - 2.2.5 Conveyance System Installation 2-20
  - 2.2.6 Electrical Installation 2-22

Table of Contents(Continued)

2.2.6.1 High Voltage Installation 2-22
2.2.6.2 Low Voltage Installation 2-23
2.2.7 Monitoring Network 2-25
2.2.7.1 Monitoring Wells 2-25
2.2.7.2 Piezometers 2-27
2.2.8 Phase II Waste Material Handling and Disposal 2-27

3.0 Implementation Changes 3-1
3.1 Sheet Pile Installation Realignment 3-1
3.2 Groundwater Extraction, Conveyance, and Monitoring Systems 3-2
3.2.3 High Voltage Electrical System 3-6
3.2.4 Extraction Pad Design/Layout 3-7
3.2.5 Sanitary Sewer Cleaning 3-8

4.0 Groundwater Extraction System Performance 4-1
4.1 Extraction System Start-Up /"Shakedown" 4-1
4.2 Twenty Four (24) Hour Pump Test 4-1
4.3 Discharge Permit Requirements 4-4

5.0 Certification 5-1

6.0 References 6-1

List of Tables

Table	Title
1	Requests for Information (RFI's)
2	Field Work Variances (FWV's)

List of Appendices

Appendix		Title
A		As-Built Construction Drawings
B		Material Cut and Data Sheets
	B.1	Groundwater Extraction System Materials
	B.2	Electrical System Materials
	B.3	Well Construction Materials
	B.4	Sheet Pile and Miscellaneous Materials
C		~~Well/Piezometer Records~~ Monitoring Wells, Piezometers, and Extraction Wells
	C.1	Boring Logs/Monitoring Well, Extraction Well, and Piezometer Construction Diagrams
	C.2	Well Development Records
D		Sheet Pile Driving Logs
E		Test Data
	E.1	Soil Cuttings Certificates of Analysis
	E.2	Discharge Water Certificates of Analysis
	E.3	PZ-107C Sample Certificates of Analysis
	E.4	Compaction Test Results
	E.5	Pressure Test Logs
	E.6	Compression Test Results
	E.7	Load Test Results
	E.8	Hypotential Cable Test Report
	E.9	Twenty-four (24) Hour Static, Pumping, and Recovery Test Data
	E.10	Cathodic Protection Testing Report
	E.11	Gamma Radiation Analysis
F		Waste Manifests
	F.1	Soil Cuttings
	F.2	Test Trench Drums
G		Survey Data
	G.1	Monitoring Wells, Extraction Wells, and Piezometers
	G.2	Sheet Pile Wall
H		Discharge Permit
I		Photographs
J		Response to USEPA Comments

List of Acronyms

ags	Above Ground Surface
APCL	Applied Physics and Chemistry Laboratory
bgs	below ground surface
CERCLA	Comprehensive Environmental Response, Comprehension, and Liability Act
CIH	Certified Industrial Hygienist
COC's	Chemicals of Concern
CPT	Cone Penetration Testing
CSO	Caretaker Site Office
CST	California Splicing and Testing
DO	Delivery Order
DTSC	Department of Toxic Substance Control
EE/CA	Engineering Evaluation/Cost Analysis
EFA-West	Engineering Field Activity - West
FFA	Federal Facility Agreement
FWV	Field Work Variance
GPM	Gallons per Minute
HAZWOPER	Hazardous Waste Operations and Emergency Response
HOA	hand/off/auto
hp	horse power
HPS	Hunters Point Shipyard
IR	Installation Restoration
IT	IT Corporation
KAIC	Kilo ampers interrupting capacity
kV	Kilo Volt
kVA	Kilo Volt Amps
LEL	Lower Explosive Limit
lf.	Linear Feet
LSH	Level Switch High
LSHH	Level Sensor High High
LSL	Level Switch Low
MSL	Mean Seal Level
NACE	National Association of Corrosion Engineers
NCP	National Oil and Hazardous Substances Pollution Contingency Plan
NEMA	National Electrical Manufactures Association
O. D.	Outside Diameter
PCB	polychlorinated biphenyls
PC/g	pico curie per gram
PG&E	Pacific Gas and Electric
PPE	Personal Protective Equipment

List of Acronyms(Continued)

PRC EMI	PRC Environmental Management
PRV	Pressure Reducing Valve
psi	pounds per square inch
psig	pounds per square inch gauge
PVC	Poly Vinyl Chloride
RAC	Remedial Action Contract
RACO	Remote Alarms and Controls
RAIWP	Remedial Action Implementation Work Plan
RASO	Radiological Affairs Support Office
RCRA	Resource Conservation Recovery Act
RFI	Request for Information
RFP	Request for Proposal
RGA	Ronald Greenwell and Associates
ROICC	Resident Officer In Charge of Construction
RPM	Remedial Project Manager
RWQCB	Regional Water Quality Control Board
SOP	Standard Operating Procedure
SS	Stainless Steel
SSHO	Site Safety and Health Officer
SVOC	semi-volatile organic compounds
TPH	Total Petroleum Hydrocarbons
TDS	Total Dissolved Solids
USCS	Unified Soil Classification System
USEPA	Unites States Environmental Protection Agency
V	Volts
VCP	Vitrified Clay Pipe
VOC	volatile organic compounds

1.0 Introduction

The purpose of this Post-Construction Report is to document the details of a Non-Time Critical Removal Action at Site IR-1/21 Industrial Landfill at Hunters Point Shipyard, San Francisco, California. This Removal Action was designed to reduce the potential for release of landfill constituents into the San Francisco Bay, in accordance with the requirements of the Comprehensive Environmental Response Compensation and Liability Act (CERCLA) and the National Oil and Hazardous Substances Pollution Contingency Plan (NCP). The Navy is the lead agency for this removal action. As specified in the Federal Facility Agreement (FFA), the Navy is working in cooperation with the US Environmental Protection Agency (USEPA) Region 9, the California Department of Toxic Substance Control (DTSC), and the Regional Water Quality Control Board (RWQCB). This removal action is consistent with future actions planned at HPS, and was selected based on compatibility with future remedial actions at the site. A sheet pile barrier and groundwater extraction system was designed and installed to control the flow and corresponding contaminant transport from a portion of the site IR-1/21 Industrial Landfill.

All work summarized in this report was conducted under Delivery Order 060 of IT Corporation's Remedial Action Contract (RAC) No. N62474-93-D-2151, administered by EFA-West. The work performed under this delivery order was based upon information presented and referenced in the Navy's Request for Proposal (RFP) to IT Corporation, dated May 14, 1996. The RFP references the following documents which were used as a general guidance. Draft Engineering Evaluation/Cost Analysis (EE/CA) prepared by PRC Environmental Management Inc. (PRC, 1996a); an associated Addendum to the Draft Engineering Evaluation/Cost Analysis, also prepared by PRC Environmental Management Inc. (PRC, 1996b); and Removal Action Implementation Work Plan (RAIWP) prepared by PRC Environmental Management, Inc. (PRC, 1996e). This delivery order was awarded to IT on June 6, 1996.

Subsequent to award, IT received a draft final EE/CA completed by PRC EMI, on May 24, 1996. The final EE/CA was submitted by PRC EMI on July 26, 1996. A draft Action Memorandum for the removal action at Site IR 1/21 was completed by PRC EMI on August 13, 1996. These documents were used in the preparation of the Removal Action Implementation Work Plan (IT, 1996a) and the associated project planning documents. The final revision of the Action

Memorandum was completed on September 13, 1996. The final Action Memorandum document was also incorporated as general guidance in the design submittals (IT, 1997a, IT, 1997b).

1.1 Site Description

Hunters Point Shipyard (HPS) is a former naval shipyard located in southeastern San Francisco, encompassing approximately 936 acres. This area has been operated as a shipyard since about 1869. The Navy used HPS from 1939 through 1974 to produce, modify, maintain, and repair various Navy vessels. From 1976 through 1986 the Navy leased about 98 percent of HPS to Triple A Shipyards.

The Industrial Landfill is located within Parcel E at the southeast boundary of HPS. During the period of 1942 to 1974, the area now comprising Site IR-1/21 was filled with a variety of undocumented construction and industrial wastes. From 1958 to 1974, shipyard wastes including sandblast waste, domestic refuse, paints, solvents, and various industrial debris were all deposited at the landfill site. Subsequent groundwater investigations have identified a groundwater plume emanating from the landfill, possibly migrating towards San Francisco Bay. Several potential chemicals of concern were identified at this site, including volatile organic compounds (VOC's), semi-volatile organic compounds (SVOC's), total petroleum hydrocarbons (TPH), metals, and polychlorinated biphenyls (PCB's); however, PCBs (arochlor 1260) were identified as the primary chemical of concern.

1.2 Project Objectives

The primary objectives of work performed under this delivery order were to confirm contaminant distribution, site lithology, and to reduce contaminant migration to the San Francisco Bay. To achieve these objectives, work items were conducted in two phases. Phase I was the collection of data and design of a groundwater containment system. Phase II was the implementation of the Phase I design.

1.3 Report Format

The following text of this report is divided into three main sections. Section 2.0 provides a detailed account of the field activities undertaken as part of each phase of work. Section 2.1 details the Phase I activities, and Section 2.2 details the Phase II activities. Section 3.0 describes changes from the project work plan and design submittal documents which occurred during field

activities and includes all field work variances (FWVs) and requests for information (RFIs). Section 4.0 details system performance during startup and shakedown of the extraction system including a twenty-four hour pump test. Section 5.0 is a report certification statement, and 6.0 is a listing of references.

The USEPA provided comments to the draft version of this document. A response to the USEPA comments is provided of Appendix J of this report.

2.0 Project Summary

The objective of mitigating the potential migration of specific landfill groundwater contaminants into the San Francisco Bay was the impetus for the implementation of the IR 1/21 Removal Action. The focal point of the Removal Action was a reported plume of PCBs within the shallow groundwater at the site. The shallow groundwater at this site flows within the A Aquifer zone, which locally consists of undifferentiated quaternary deposits, landfill debris, and other anthropogenic fill material. A subsurface sheet pile barrier and groundwater control system were proposed for this Removal Action. Conceptual designs for the proposed system were presented in the EE/CA and the Removal Action Work Plan. The conceptual design, included the installation of a 600 foot long sheet pile wall keyed into the underlying Bay Mud. The sheet pile wall is intended to act as a relatively impermeable vertical barrier to groundwater flow, thus impeding the potential flow of groundwater contaminants into the Bay. The underlying Bay Mud is considered a relatively impermeable horizontal barrier to groundwater flow, which also impedes the flow of groundwater contaminants. The flow of shallow groundwater beneath the site is toward the San Francisco Bay. To prevent groundwater mounding on the landward side of the sheet pile barrier, a groundwater control system was proposed. The concentrations of the groundwater contaminants were anticipated to be low enough that the extracted groundwater could be discharged into the POTW without pretreatment. On the basis of this design, IT was contracted to collect additional site specific data /design the system (Phase I), and to construct the approved system (Phase II). The system that was constructed, varied from the conceptual design because site conditions were found to be somewhat different than those that were initially anticipated. The resultant system meets or exceeds the objectives of the Removal Action.

The work that was conducted to achieve the objectives, was completed in a phased approach. The initial phase, or Phase I activities consisted of data collection and design. Each specific work element that was completed for this effort, is discussed in Section 2.1 and its associated subsections. The Phase II activities consisted of implementation of the design, as well as, the field engineering and construction. Each major work element that was completed for the Phase II effort is addressed in Section 2.2 and its associated subsections.

2.1 Summary of Phase I Activities

The scope of the Phase I data collection activities began with the preparation of project plans. Following the completion of the plans, and prior to field mobilization, IT held the contract required pre-construction meetings. At the conclusion of those meetings, a California licensed surveyor performed an initial site layout survey. An underground utility location contractor then cleared the prospective work locations for the subsurface investigation. Subsurface investigation activities included Cone Penetration Testing (CPT) at 37 locations, their depths ranging between 20 and 60 feet below the ground surface. The sampling apparatus was also used to drive a Hydropunch, for the collection of eight groundwater samples. These samples were analyzed for the Chemicals-of-Concern (COCs) that drive this removal action. Following the preliminary analysis of the CPT data, a test pile program was conducted to assess the viability of driving sheet piling within the landfill area. A preliminary corrosion test was conducted, over the period of a weekend, on one of the driven test piles. Concurrent with the subsurface investigation, a subcontractor was used to perform video surveys of selected storm sewers within the landfill. The sanitary sewer, used for project effluent discharge, was also video surveyed. All the field data collected under Phase I were incorporated into a revised design for the system. This design was presented in two separate design documents, one submittal for the sheet pile containment barrier (IT, 1997a), and a second for the groundwater extraction system (IT, 1997b).

2.1.1 Project Plans and Permits

A Removal Action Work Plan (IT, 1996a), a Contractor Quality Control Plan and Sampling and Analysis Plan (IT, 1996b), and Site Specific Health and Safety Plan (IT, 1996c) were prepared by IT. The plans were finalized on August 29, 1996.

2.1.2 Phase I PreConstruction Meeting Prior to Mobilization

A pre-construction meeting was held with the Navy prior to mobilization to the field. IT participants included the project manager, site quality control manager, site safety and health officer, and project engineer(s). Topics of consideration included scopes of work, schedule, work hours, security, points of contact, and construction checklist items from the Navy's Resident Officer in Charge of Construction (ROICC).

2.1.3 Initial Surveying - Site Layout

The site land surveying was performed by Ronald Greenwell and Associates (RGA), under subcontract to IT Corporation. The first step of site investigation activities were the initial survey layout of the CPT points and Hydropunch sampling locations. The locations are shown in the Removal Action Work Plan (IT, 1996a), as well as the Design Submittal Sheet Pile Containment Barrier, (IT, 1997a). An initial baseline and control point layout survey was performed to tie all project survey data to existing site benchmarks. The accuracy of individual survey measurements was in accordance with IT Standard Operating Procedure (SOP) 23.1, "Land Surveying".

Sampling and testing points that were relocated during the course of the investigation, were resurveyed at the conclusion of the Phase I data collection effort.

2.1.4 Underground Utility Clearance

The underground utility clearance was conducted by Subdynamic Corporation, under subcontract to IT Corporation. The proposed CPT and Hydropunch locations were identified and the locations were staked by RGA. Following the location and staking efforts, a two step process was implemented to identify the presence of potential underground utilities. First, the base utility maps (provided by the Navy) were cross checked with the staked locations; second, a utility location survey, using geophysical methods, was performed by Subdynamic Corporation to identify any potential utilities or other underground obstructions. All underground utility clearance activities were performed in accordance with IT SOP 7.1, "Surface and Subsurface Geophysics".

The underground utility location work included a survey for magnetic anomalies. Several anomalies were noted and their locations marked on the surface.

2.1.5 Cone Penetrometer Testing - Geotechnical Data Collection

The Cone Penetrometer Testing (CPT) was performed in October 1996 by Tonto Drilling, under subcontract to IT Corporation. CPT data was collected to assess the soil profile along the alignment of the sheet pile wall. The depth to bay mud was targeted in this investigation because it acts as a relatively impermeable boundary to contaminant transport. Testing was conducted using hydraulically driven probes containing instrumentation that recorded pore pressure, depth,

tip resistance, and "sleeve" friction. The CPT data collection was conducted in accordance with IT's Standard Operating Procedure 10.2, "Cone Penetration Testing and Hydropunch Groundwater Sampling".

Cone penetrometer testing was completed at 37 locations along the proposed alignment of the sheet pile wall and extraction well field. Target depths ranged from 20 to 60 feet below the ground surface (bgs). This data was used to assess the site stratigraphy as well as assess the potential for encountering buried landfill debris (Appendix A, Sheet G-4). Based on these data, the sheetpile depth design specified penetration below the projected surface of the bay mud unit. When subsurface obstructions were encountered during CPT pushes, offset locations were selected. Due to the presence of minor underground obstructions, target depths were not achieved at three initial locations. Two of the CPT points that met refusal were relocated and target depths were achieved. The third CPT point that met refusal was eliminated from the program due to limited space for rig movement.

The CPT results were presented in Appendix A of the Design Submittal for Sheet Pile Containment Barrier, Site IR-1/21: Industrial Groundwater Plume, DO No. 0060 (IT, 1997b).

2.1.6 Hydropunch Sampling

The Hydropunch sampling was conducted during October, 1996, by Tonto Drilling, under subcontract to IT Corporation. This work was performed in order to more fully delineate the aerial extent of the groundwater that was suspected to be affected by the presence of PCBs and other landfill constituents. Eight hydropunch samples were collected at locations adjacent to selected CPT points along the proposed alignment of the containment barrier. The data from these samples was used to evaluate the distribution of selected landfill COCs in the vicinity of the projected alignment of the sheet pile wall.

The samples were analyzed for polychlorinated biphenyls (PCBs), volatile organic compounds (VOCs), semivolatile organic compounds (SVOCs), total dissolved solids (TDS) , and metals. The resulting data confirmed the optimum positioning for the sheet pile wall alignment. These data were presented in Appendix B of the Design Submittal for Sheet Pile Containment Barrier, Site IR-1/21: Industrial Groundwater Plume, DO No. 0060 (IT, 1997a).

Following the sample collection, all sample points were located by land survey, in X-Y-Z coordinates, and documented for design purposes.

2.1.7 Test Sheet Piles

The test sheet piles were installed by Miller Thompson Constructors Inc., under subcontract to IT Corporation. The test pile program was conducted as part of the Phase I field activities in order to evaluate constructability of the sheet pile containment barrier at this site. Test sheet piles were driven in pairs at four preselected locations, targeted at known areas of difficult CPT driving conditions. One test sheet pile pair was driven at a relatively unobstructed location. Test sheet piles were driven to their full target depths at all locations.

The test sheet pile program demonstrated that refusal at a CPT location alone was not considered consequential with respect to constructability of the sheet pile wall. A summary report of the test sheet pile installation, including driving logs and inspection forms, is included in Appendix C of the Design Submittal for the Sheet Pile Containment Barrier (IT, 1997a).

2.1.8 Preliminary Corrosion Testing

Corrosion Testing was performed by Associated Corrosion Engineers of Walnut Creek, California, under subcontract to IT Corporation. The evaluation included soil resistivity tests at various depths along the area the sheet pile wall was to be installed. Tests that measured the actual electrical current drain of the southernmost test sheet piles were also run. Soil resistivity tests were performed utilizing the Wenner Four Pin method. Most of the resistivities measured showed the soil to be mildly corrosive, however soils in the depth of 7 to 10 feet were slightly more corrosive. Drainage tests of the installed test sheet piles were performed in accordance with the National Association of Corrosion Engineers (NACE) Recommended Practice, RP-0169-92. The tests showed that the proposed sheet pile installation would initially require approximately 4 milliamperes per square foot of metal surface for full cathodic protection.

Based on these results, Associated Corrosion Engineers recommended that coated sheet piles should not be installed without supplemental cathodic protection. A copy of their report was included as Appendix D of the Sheet Pile Containment Barrier Design Submittal, (IT, 1997a).

2.1.9 Storm Sewer Video Survey

Storm sewer video surveying was conducted in October 1996 by Subtronic Corporation under subcontract to IT Corporation. As detailed in the final EE/CA, (PRC, 1996c), site utility maps show eight storm sewer outfalls that reportedly discharge within, or beneath, the industrial landfill. IT was requested to plug each of the eight lines to prevent their discharge into the landfill. A video survey of the outfall discharge lines was first conducted to verify the existence and location of each line. The survey comprised a review of approximately 1100 feet of storm sewer line.

The results of the field investigation and video survey revealed that the "outfalls", were actually inlets or catch basins rather than storm sewer outfalls as described in the EE/CA. The storm sewers were video surveyed to verify their junction points with known existing lines, as well as, to evaluate the overall integrity of the lines. The lines were observed to be intact and in relatively sound condition with minimal sediment load.

The results of the video survey revealed that the known storm sewer lines were neither draining into, nor providing a significant discharge source into the Site IR-1/21 Industrial Landfill; but rather, providing drainage for surface water and moving it away from the landfill. It was deemed unnecessary to plug the storm drain lines as was specified in the EE/CA.

2.1.10 Sanitary Sewer Video Survey and Cleaning

The initial sanitary sewer video surveying was conducted in October 1996 by Subtronic Corporation under subcontract to IT Corporation. Cleaning and follow-up video surveys of the sanitary sewer lines were conducted in October 1996 by Mixis, Inc. under subcontract to IT Corporation.

As outlined in the RAIWP (PRC, 1996e), the groundwater extraction system discharge line was designed to connect directly into to the existing sanitary sewer system. This connection was scheduled at Manhole 187 (MH-187), where the existing sewer line carries flow to Pump Station A. At Pump Station A, the effluent was proposed to be pumped into the sanitary sewer system that is owned and operated by the City and County of San Francisco.

To verify the integrity of the sanitary sewer line between MH-187 and Pump Station A, a video survey of approximately 860 feet of the of sewer line was performed. The results of that survey revealed that the line was constructed of both eight inch diameter Vitrified Clay Pipe (VCP), and 12 to 24 inch diameter reinforced concrete pipe. A 108 foot segment of the sewer line was submerged under standing water. Subtronic Corporation was unable to perform the video inspection of this segment during the survey. Sheet C-11 of Appendix A, shows the alignment, manhole designations, and sizes of the subject sanitary sewer line segments.

The survey revealed that the subject segment of sewer line was intact and in reasonably sound condition; however, the solids loading in the line ranged up to 30%. As a result of the solids loading within the selected sections of the line, coupled with the inability to video survey the submerged section of the line, the Navy directed IT to clean the sanitary sewer line from MH-187 to Pump Station A. The sewer line cleaning work was conducted in accordance with Field Work Variance No. 2.

2.1.11 Preparation of the Design Submittal

Upon completion of Phase I field activities final designs of the sheet pile containment barrier and the extraction system were prepared by IT Corporation and submitted to the Navy for review. A draft of the design for the sheet pile containment barrier was submitted on March 7, 1997. Navy's comments were incorporated and the final revision of the design was submitted on August 8, 1997. A draft of the design for the extraction system was submitted on March 24, 1997. Navy's comments were incorporated and the final revision of the design was submitted on May 14, 1997.

2.2 Summary of Phase II Activities

Phase II consisted of implementation of the design resulting from the first phase. The primary activities undertaken in Phase II included installation of the sheet pile containment wall, construction of the groundwater extraction system, installation of a groundwater monitoring network, and start-up and shakedown of the extraction system.

The Phase II construction activities began with mobilization of the site office facilities, followed by installation of the sheet piling. As a result of repeated encounters with unanticipated landfill obstructions, the piling installation was not performed as a continuous work activity. A portion

of the piling installation effort was performed in Level B Personal Protective Equipment (PPE). As installed, total sheet pile length was approximately 614 feet, and ranged in depth from 12 to 55 feet. After the wall was installed, cathodic protection testing was performed to assess corrosion rates of the wall, and to assist in design of a catholic protection system if necessary. Following the completion of the piling installation, the groundwater extraction system was constructed. The groundwater extraction system consists of two distinct units, the Northern Extraction system, and the Southern Extraction System. The Northern Extraction System is comprised of seven groundwater extraction wells, fitted with submersible pumps, that discharge into the Northern Collection System. The Northern Collection System is a series of headers and piping that convey the extracted groundwater to the collection / monitoring pad. The Southern Extraction System is comprised of an extraction trench with two collection sumps. Each sump is fitted with a submersible pump, that discharges into the Southern Collection System. The Southern Collection System consists of header piping for the two collection sumps, that conveys the extracted groundwater to the collection/monitoring pad. At the collection / monitoring pad, the Northern and Southern Collection Systems are joined into a single discharge conveyance pipeline. The collection / monitoring pad is the location of the primary groundwater extraction system control and monitoring components. Other control components and sensors are situated within vault boxes at each well / sump head. The groundwater conveyance system consists of a discharge pipeline that traverses the landfill to the nearest sanitary sewer inlet. The Navy discharges the groundwater to the Publicly Owned Treatment Works (POTW) under a permit issued by the City of San Francisco. The system electrical consists of a high voltage power distribution and a low voltage power supply.

In order to monitor the performance of the system when it is operational, a network of four groundwater monitoring wells, and 33 piezometers were installed at various locations within the project area. The groundwater monitoring wells and piezometers were developed following their installation.

2.2.1 Sheet Pile Installation

The sheet pile was installed by Wagner Construction (Wagner) of San Francisco (Hunters Point), California, under subcontract to IT. A preparatory inspection meeting was held with IT and Wagner on August 8, 1997. Prior to Wagner's arrival, IT began to mobilize and setup the site. Activities that were undertaken during the week ending August 8, 1997 included: mobilizing the

field office, installing temporary fencing, and mobilizing miscellaneous support equipment and supplies. Sheet pile installation began on August 15, 1997. Because of unforseen site conditions, the piling installation was not continuous. Piling installation occurred intermittently between August 13, and December 3, 1997.

The materials used for the construction of the sheet pile wall were specified in the design submittal. The materials installed were: new Bethlehem PZ-27 sheet piles; and Adeka Ultra Seal A-50 joint sealant. (A minimum 24 hour curing time for the Adeka was exercised prior to sheet pile installation. During this period, the piles were stored on site covered with plastic to protect them from moisture.) The completed containment wall, as shown on sheet G-4 of Appendix A is 614 linear feet (lf) in length, with a surface area of 15,041 square feet (sf). A total of 410 sheet piles, with lengths ranging between 12 and 55 feet, were installed at this site. Equipment used for installation of the sheet pile barrier included a 218 Link Belt 85-ton crane, and several different types of vibratory hammers and accompanying power units. Specifications for the vibratory hammers and power units used on the sheet pile wall are included in Appendix D, Sheet Pile Driving Logs. Photographs of the sheet pile wall installation are included in Appendix I.

IT performed continuous inspection during pile driving. The sheet piles were inspected for compliance with tolerance requirements such as: maximum offsets in field re-alignment, variation in plumbness, deviation from design depths, intact pile interlocks, and interlock welds. A driving record of each sheet pile is included in Appendix D, Sheet Pile Driving Logs.

A starter trench, approximately two feet deep, was excavated to facilitate the sheet pile installation. The top six inches of both sides of each pile interlock were welded together with a 1/4 inch fillet weld for electrical continuity of the sheet pile wall to allow for future installation of a cathodic protection system. Following installation of the sheet piles and welding of the interlocks, the sheet pile wall alignment and top of wall elevations were surveyed and the trench backfilled in sections.

Between August 15, 1997, and September 2, 1997, Wagner Construction installed approximately 250 linear feet of sheet piling to depths ranging between 12 and 45 feet below the ground surface. On September 2 and 3, 1997, 50 and 55 foot long sheet piles were being driven. While

driving these piles, several minor obstructions were encountered at depths of 20 to 30 feet below the ground surface. During the afternoon of September 3, 1997, a 55 foot long piling was being installed, as the others had been, when a sudden, relatively small, burst of pressurized gas escaped to the surface along the interface between the piling and the soil. About 20 feet of this particular piling had been installed below the ground surface at the time the gas escaped. The gas was described as faintly yellow in color, with odor descriptions of acetylene, ammonia, and chlorine varying with each employee that was asked. Under the direction of the IT CIH, the work area was re-evaluated and the conditions were found safe to proceed. The ROICC was verbally notified of the escape of gas and of the measures being taken. Pile driving was then conducted for the remainder of the day with no further escape of gasses detected.

On September 4, 1997, pile driving resumed until mid morning, when a localized condition of more than 10% of the Lower Explosive Limit (LEL) was detected within a crevice adjacent to the sheet pile. Work was stopped and the piling crew was removed from the area. At the direction of the Navy RPM, the IT SSHO obtained draeger tubes designed for the measurement of chlorine, natural gas, and sulfuric acid (ammonia was unavailable on short notice), prior to resuming work. The ground surface atmosphere at the interface between the crevice and the piling, was tested for chlorine, natural gas, and sulfuric acid. Natural gas was detected at a low concentration, while chlorine and sulfuric acid were not detected. The LEL condition persisted in the crevice adjacent to the pile during the time of measurement with the draeger tubes. In order to suppress the LEL condition, the piling starter trench and the crevice adjacent to the piling were flooded with water and the LEL conditions were re-monitored. No evidence of gas was detected by the LEL meter. The ROICC was verbally notified of the conditions that were encountered and the measures that were taken. Pile driving activities were then resumed and continued without detectable percentages of LEL conditions or observed gasses for the remainder of the day.

On the morning of September 5, 1997, pile driving operations resumed as they had the previous day; however, shortly before noon another short burst of gas escaped from the landfill. The piling crew was removed from the area, and within several minutes the gas was confirmed to have a positive reading on the chlorine draeger tube. The concentration of the gas was measured in excess of five parts per million (the maximum concentration scale of the available draeger tubes). A Hydrogen Sulfide (H_2S) meter was also used for a measurement during this time; but,

the meter quickly registered an elevated reading and rapidly drifted back to zero. IT believes that this meter behavior was the result of interference with the sensor rather than an actual detection of H_2S. This belief is based upon the fact that H_2S was not detected in any subsequent readings, and that no H_2S odors were detected by any of the crew during the duration of this operation. Upon the confirmation of the escape of additional gasses, the IT SSHO contacted the IT CIH for consultation. The conditions were reviewed with the IT CIH and a collective decision was made to continue with supplied air. The piling work was stopped for the day in order to begin preparation to continue work with supplied air. The ROICC was verbally notified of the conditions that were encountered and the measures that were taken. In order to prevent the undetected escape of gasses over the weekend, the piling starter trench was dammed and flooded with water in the area where previous encounters with the escaping gas had occurred.

The potential scenarios for the continued escape of gasses were evaluated throughout the day on Friday September 5, 1997. It was determined that there was a potential hazard associated with further gas releases. Since IT was working in the debris area of the landfill, explosion hazard and exposure hazard were both reviewed. To mitigate the explosion hazard, heavy crane mats were used to blanket the ground surface of the working area on both sides of the starter trench and piling. To mitigate the exposure hazard, supplied air was used within the exclusion zone. To reduce the potential for additional escape of gas into the ambient air, the working segment of the pile starter trench was filled with a drilling mud consisting of bio-polymer slurry. Two chlorine detectors were also added to the complement of meters and detectors at the site.

Following several days of limited success in driving the piling through the debris area, the piling subcontractor partially pre-drilled the piling locations where obstructions had been encountered (approximately at station 13+50, sheet C-9 of Appendix A), in an attempt to "push the obstructions aside". On September 16, 1997, the pre-drilling activity led to an additional escape of gas. As a result of the escaping gas and its unknown origin, the sheet piling subcontractor was mobilized to the Site IR-03 Oil Ponds to begin scheduled work at that site, while IT and the Navy further evaluated the PPE requirements and available options for completion of the sheet pile containment wall at Site IR-1/21. An alternative alignment of the sheet piling was selected by the Navy as the means to deal with the obstructions.

On October 29, 1997 the piling contractor was remobilized to Site IR-1/21 under full Level B PPE. An alternative alignment of the sheet piling resulted in the completion of the containment barrier without the escape of any additional gas. The new alignment resulted in the installation of approximately 1291 square feet of additional sheet pile. The realignment constituted a 20 foot offset, and gradual sweep back toward the design alignment between STA 13+57 and STA 14+37 (sheet C-9 of Appendix A). The piling work installation was continued through out the month of November, and was completed on December 3, 1997.

The As Built Sheet Pile Wall Layout and Profile drawings are presented in Appendix A, sheets C-9, and C-10. The sheet pile driving logs are presented in Appendix D. The material data and cut sheets are presented in Section B.4 of Appendix B. The sheet pile wall survey data is presented in Section G.2 of Appendix G.

2.2.2 Cathodic Protection Testing

Cathodic protection testing of the installed sheet pile wall was conducted by Corrosion Engineering Associates of Danville, California under subcontract to IT Corporation. The testing was performed on July 30, 1998 and included an evaluation of existing soil resistivity data, structure to soil potential measurements (drainage test), and electrical continuity and cathodic protection current requirements.

Results of the tests indicated that the individual sheet piles were electrically common, and that the wall was actively corroding. The cathodic protection current requirement test showed that the sheet pile wall would provide adequate containment for three years. However, to extend the effective containment life of the sheet pile wall, a current density in excess of 2.0 milliamps per square foot of metal would be required for adequate protection. The cathodic protection test report is presented in Section E.10 of Appendix E.

2.2.3 Groundwater Extraction System Construction

The mechanical portion of the groundwater extraction system was constructed between January and July, 1998 by Miller/Thompson Constructors, Inc. of San Francisco, California under subcontract to IT. Extraction wells for the northern sheet pile wall section were installed by Gregg Drilling and Testing Inc. of Martinez, California between December 18, 1997 and January 20, 1998 under subcontract to IT.

Field work was intermittent due to weather delays. Construction activities included the installation of a conveyance pipeline to the sewer discharge point, a horizontal perforated collection pipe with associated sumps (Southern Extraction Trench), extraction well installation and well/collection sumphead vaults and piping with appurtenances, header pipe runs from extraction wells/collection sumps to collection/monitoring pad, and a collection/monitoring pad with piping, valves and appurtenances. The groundwater extraction system construction drawings are presented in Appendix A. The materials data and cut sheets are presented in Section B.1 of Appendix B. Photographs of the groundwater extraction system are included in Appendix I.

2.2.3.1 Northern Collection System Extraction Wells

Seven extraction wells were installed west of the sheet pile wall's northern section (Appendix A, Sheet C-2). The extraction wells were screened through the saturated thickness of the unconfined aquifer to maximize the surface area from which to extract groundwater, and enhance the flexibility to impact the potentiometric surface. Initially, pilot borings were drilled to depths ranging from 17.5 to 30 feet (ft) below ground surface (bgs) in order to assess subsurface stratigraphy, and to provide design information for construction details. The pilot borings were continuously cored and visually logged using the Unified Soil Classification System (USCS). The boring logs are presented in Section C.1 of Appendix C. In general, Bay Mud was encountered between 12 to 20 ft bgs. Subsequently the pilot borings were overreamed and the wells installed with completion depths ranging from about 18 to 24 ft bgs. The pilot borings and overreaming were completed using 8 inch and 14 inch outside diameter (O.D.) hollow stem augers advanced by Marl 5T and Mobile B-61 drill rigs.

The extraction wells were constructed with six inch diameter, Schedule 80 (Sch. 80), flush-threaded, polyvinyl chloride (PVC) casing with 0.020-inch slotted screen. A five and one-half foot long section of blank casing was installed below the screen to serve as a sediment trap and pump gallery. A sanding tube was installed to replenish the filter pack if it should diminish over time or during development. A water level sounding tube was installed directly adjacent to the well to measure water level during pumping conditions. The extraction well screen lengths varied from five to ten feet. The filter packs consisted of clean, #2/12 Lonestar sand installed from the screen bottom to one to two feet above the top of screen. A two foot thick bentonite seal, composed of 3/8" diameter bentonite pellets, was placed above the filter pack. A five

percent bentonite/cement grout (sanitary seal) was placed via tremmie pipe from the top of the bentonite seal to within one and one-half feet of the ground surface. The space was left to accommodate for the wellhead vaults. The wells were finished approximately eighteen inches bgs inside subsurface concrete vaults which contain extraction piping and appurtenances. The concrete vaults were completed about four inches above ground surface (ags). A pea gravel apron and concrete parking blocks provide protection for the vaults.

The sand tube and water level sounding tube was secured to the centralizer with stainless steel wire and pre-assembled as part of the casing string prior to insertion into the borehole. The sand tube and water level sounding tube are constructed of one inch diameter, Schedule 40 (Sch. 40), flush-threaded PVC. The sand tube extends to the top of the sand packed interval. The water level sounding tube includes a one inch diameter, Sch. 40 PVC, 0.020-inch slotted screen within the same interval as the extraction well screen. Well construction diagrams are presented in Section C.1 of Appendix C. The extraction well survey data are presented in Section G.1 of Appendix G.

The extraction wells were developed January 6 and 7, 1998. Six of the wells were developed by surging, bailing, and pumping until aquifer parameters (pH, temperature, conductivity, and turbidity) stabilized. One well, EW-154, was developed only by surging and bailing due to low aquifer yield. A minimum of three well volumes were removed during development. The extraction well development records are presented in Section C.2 of Appendix C.

To reduce the potential for cross-contamination between borings, all downhole drilling equipment was steam cleaned with a high pressure steam washer and air-dried. All decon water was contained in 55-gallon drums marked, stored at the site, and analyzed for disposal.

Soil-cuttings generated from drilling were contained in one 20 cubic yard roll-off bin and stored at the site pending disposal. The soil cuttings and decon/development water Certificates of Analysis are in Sections E-1 and E-2 of Appendix E, respectively. The associated waste manifests are in Sections F-1 and F-2 Appendix F.

2.2.3.1.1 Extraction Pumps and Level Sensors Installation

Seven groundwater extraction pumps and associated water level sensors were installed as part of the groundwater extraction system. One pump per extraction well was installed. The pump and level sensor cut and data sheets are presented in Section B.1 of Appendix B.

2.2.3.1.2 Extraction Well Pumps

The extraction well pumps are Groundfos Model 7S, four inch diameter, 304 SS and Teflon, submersible centrifugal type with a maximum discharge head of 210 ft and flow rates ranging from 3 to 10 gpm. The pump motors are continuous-duty, 115 volt, 1/3 hp, equipped with a 3-way operation selection switch including hand, off and auto (HOA) at the wellhead. The eductor pipes are constructed of one inch diameter, Schedule 80 PVC. The pump support cables are 316 SS wire rope. All power cables and level sensors are securely attached to the eductor pipe with non-metallic tie straps. Each well contains three level sensors to control pump motor operation while in auto mode; a low level sensor to turn the motor off in order to prevent cavitation; a high level sensor to turn the pump on once the well has recharged; and a ground reference sensor. Extraction well cut and data sheets are presented in Section B.1 of Appendix B.

All seven wellheads are equipped with a discharge-line high pressure switch that turns the pump off in order to prevent motor burn-out and a globe valve for manual adjustment of flow rate.

2.2.3.2 Northern Collection System Installation

The Northern Collection System located between Station 13+40 and Station 15+80 is composed of seven vertical extraction wells situated approximately 40 feet apart and ten feet east of the sheet pile wall, and associated discharge piping (Appendix A, Sheet C-2). The wells were completed and screened through the saturated thickness of the unconfined aquifer. Installation and construction details of the extraction wells are described in Section 2.2.3.1. The Northern Collection System was installed December 1997 thru May 1998.

The extraction wellheads were completed in pre-fabricated, Christy concrete vault boxes to protect the below ground wellhead components (Appendix A, Sheet C-7). Two vaults were installed per wellhead. The first vault was installed to cover the wellhead and sample port. The second vault (vent isolated from the first vault) contains the electrical control panel and flow components. Both vaults were placed on three inches of compacted pea gravel. The second

vault was completed with a three inch concrete base to reduce accumulation of landfill gases inside the vault. Native material was backfilled and compacted around the vaults up to the existing grade. An apron of crushed gravel was placed around the vaults at a 4:1 slope.

The groundwater is pumped from the extraction wells to the surface, through the wellhead vaults and components into a header pipe that conducts the water to the collection and monitoring pad. The wellhead flow components consist of a sample port, a pressure indicator, a high pressure switch to shut-off the pump motor and prevent motor burn out if the in-line pressure conditions reach 100 psig, a sediment strainer, a check valve to prevent backflow, a flow indicating/totalizing meter, and a globe valve to adjust pumping rates (Appendix A, Sheets C-1 and C-2). The groundwater is conveyed from the pump through the wellhead vault components and to the header pipe via one inch diameter, Schedule 80 PVC piping. The header pipe, constructed of three inch diameter, Schedule 80 PVC, is buried in a trench at 33.5 inches bgs with its invert at 27 inches bgs. Above the header pipe at 24 inches bgs are the low voltage electrical lines contained in Schedule 40 PVC conduit. Prior to header pipe installation three inches of compacted sand bedding was placed in the bottom of the trench. One half cubic foot concrete thrust blocks were installed at every elbow and tee along the piping run to reduce pipe movement from water hammer. Once the thrust blocks were set, sand was placed around and up to three inches above the top of pipe. Subsequently, the electrical conduits were placed and then sand was placed around and up to three inches above the top of electrical conduit with native fill used to backfill to at least six inches above grade (Appendix A, Sheet C-6). Compaction was completed in six-inch lifts using a hand held Wacker and track rolled with a backhoe. Detectable marking tape was placed at 21 inches bgs along the entire pipe run for future underground utility locating.

Integrity of the header pipe and wellhead vault components was verified by a pressure test conducted May 7, 1998 from pump isolation valves V146-1, V154-1, V158-1, V134-1, V138-1, V142-1, and V150-1 to the collection/monitoring pad-influent isolation valve (V02), (Appendix A, Sheet C-1). The pipeline was water pressurized to 100 psig for a two hour period without loss of pressure or observed leakage at joints and connections. The pressure test data logs are presented in Section E.5 of Appendix E.

Preliminary predictive modeling indicated that sufficient groundwater can be withdrawn from the

extraction wells to impact groundwater flow near the sheet pile wall. However, should the hydraulic conductivity be greater at one or more well locations such that increased pumping does not sufficiently impact the potentiometric surface, additional extraction wells may need to be installed. Thus, five blind laterals (stubouts) were installed between the existing extraction wells to serve as easy tie-ins to the header pipe for additional extraction wells if required. (Appendix A, Sheet C-2).

2.2.3.3 Southern Extraction Trench Installation

The Southern Extraction Trench, located between Station 10+00 and Station 12+60, is composed of an extraction trench collection pipe with accumulation points from which to withdraw collected groundwater (Appendix A, Sheets C-2 and C-3). Groundwater will flow through geotextile fabric, permeable fill, and a collection pipe to one of two collection sumps. The fabric will help reduce pore plugging within the permeable fill, the permeable fill will help convey groundwater to the collection pipe, the collection pipe will convey groundwater to the collection sumps, and the sumps will allow collected groundwater to be extracted for discharge. The Southern Extraction Trench was installed in April 1998.

The collection system layout consists of approximately 239 linear feet (lf) of below ground, horizontal slotted pipe with two collection sumps and four cleanouts. The collection system was constructed with four-inch diameter, 0.020-inch factory slotted, Schedule 80 PVC pipe connected to two 14-inch diameter Schedule 80 PVC collection sumps and four-inch diameter, Schedule 80 PVC cleanouts (Appendix A, Sheet C-4). The elevation at the bottom of the collection trench ranges from 1.7 feet MSL at STA 10+00 to one foot MSL at STA 12+60. Based on test trenching performed on October 31, 1997 trench boxes were used during installation in order to prevent slumping.

The collection pipe gallery consists of Class 1A permeable fill wrapped with Mirafi 160 N geotextile. The gallery was assembled by first setting geotextile on the trench bottom with three inches of Class 1A permeable fill on top of the geotextile. Next, the pipe was placed on the permeable fill, and the trench backfilled with an additional two feet of Class 1A permeable fill. Geotextile was then overlapped to prevent native material from entering the collection gallery. Finally, native backfill material was placed and compacted within 27.5 inches bgs.

The collection sumps were installed with one foot of concrete around the base to off-set their bouyancy. The sump excavation was backfilled with pea gravel up to three inches above the horizontal collection pipe, and the remainder of the excavation was backfilled to two feet ags with native materials. Compaction was completed in six inch lifts using a hand held Wacker and track rolled with a CAT 325 excavator. Compaction testing was not performed, but was visually inspected and documented.

2.2.3.3.1 Collection Trench Sump Pumps and Level Sensor Installation

Two submersible pumps, water level sensors, pump support cables, wellhead seals, eductor piping, and flow inducer sleeve/shrouds were installed in the collection sumps during May, 1998 (Appendix A, Sheets C-1 and C-4).

2.2.3.3.2 Collection Trench Sump Pumps

The sump pumps are Groundfos Model 10S, four inch diameter, 304 SS and Teflon, submersible centrifugal type with a maximum discharge head of 165 ft and flow rates ranging from 5 to 14 gpm. The pump motors are continuous-duty, 115 volt, 1/3 hp, equipped with a 3-way operation selection switch including hand, off and auto (HOA) at the wellhead. The eductor pipes is one inch diameter, Schedule 80 PVC. The pump support cables are 316 SS wire rope. All power cables and level sensors are securely attached to the eductor pipe with non-metallic tie straps. Each well contains three level sensors to control pump motor operation while in auto mode; a low level sensor to turn the motor off in order to prevent cavitation; a high level sensor to turn the pump on once the well has recharged; and a ground reference sensor.

Both wellheads are equipped with a discharge-line high pressure switch that turns the pump off in order to prevent motor burn-out and a globe valve for manual adjustment of flow rate.

2.2.3.4 Southern Collection System Installation

The collection sumpheads were completed in pre-fabricated, Christy concrete vault boxes used to protect the below ground sumphead components (Appendix A, Sheet C-7). Two vaults were installed per sumphead. The first vault was installed to cover the sumphead and sample port. The second vault (vent isolated from the first vault) contains the electrical control panel and flow components. Both vaults were placed on three inches of compacted pea gravel. The second

vault was completed with a three inch concrete base to reduce accumulation of gases inside the vault. Native material was backfilled and compacted around the vaults up to the existing grade. An apron of crushed gravel was placed around the vaults at a 4:1 slope.

Accumulated groundwater in the sumps is pumped to the surface, through the sumphead vaults and components into a header pipe that conducts water to the collection and monitoring pad (Appendix A, Sheets C-1 and C-2). The sumphead flow components consist of a sample port, a pressure indicator, a high pressure switch that shuts-off the pump motor to prevent motor burn out if in-line pressure conditions reach 100 psig, a sediment strainer, a check valve to prevent backflow, a flow indicating/totalizing flow meter, and a globe valve to adjust pumping rates. The groundwater is conveyed from the pump through the wellhead vault components and to the header pipe via one-inch diameter, Schedule 80 PVC piping. The header pipe, constructed of two inch diameter, Schedule 80 PVC, is buried in the extraction trench at 24.5 inches bgs with its invert at 19 inches bgs. Next to the header pipe are low voltage electrical lines contained in Schedule 40 PVC conduit. Prior to header pipe and electrical conduit installation, three inches of compacted sand bedding was placed in the bottom of the trench. Once the header pipe was installed, concrete thrust blocks were installed at every elbow and tee along the piping run to reduce potential pipe movement from water hammer. After the thrust blocks and electrical conduits were installed sand was placed around and up to three inches above the top of pipe and conduits with native fill used to backfill to at least six-inch above grade (Appendix A, Sheet C-6). Compaction was completed in six inch lifts using a hand held Wacker and track rolled with a CAT 325 excavator. Compaction testing was not performed, but was visually inspected and documented. Detectable marking tape was placed at 18 inches bgs along the entire pipe/conduit run for future underground utility location.

The integrity of the header pipe and sumphead vault components was verified by a pressure test conducted May 7, 1998 from pump isolation valves V108-1 and V122-1 to the collection/monitoring pad-influent isolation valve (V02). The pipeline was water pressurized to 100 psig for a two hour period without loss of pressure or observed leakage at joints and connections. The pressure test data logs are presented in Section E.5 of Appendix E.

2.2.4 Collection/Monitoring Pad and Instrumentation Installation

A concrete collection and monitoring pad was constructed to contain the low voltage distribution panel and the flow components prior to final discharge (Appendix A, Sheet C-7). A ten foot by 16 foot concrete pad was constructed with #4 rebar on 18 inch centers. Compressive strength of the concrete exceed the 4000 psi design requirement. Concrete strength was verified by compressive strength tests performed by BSK testing laboratory. The compression test results are presented in section E.6 of Appendix E. Additionally, a slump test was conducted that resulted with a maximum slump of 3 1/4 inch. The pad was constructed with a raised portion where the power distribution panel is located. The pad is surrounded by an eight foot tall barb-wired chain link fence and locking gate. Gravel was spread around the pad within the fenced area as a working surface and from the pad to J street to allow direct vehicle access.

The pad flow components consist of a globe valve for flow control and influent isolation, pressure indicators, a pressure switch to alarm high pressure conditions due to strainer blinding or unusual process conditions, a basket type sediment strainer, a flow indicating/totalizing meter, a pressure reducing valve to lower the discharge pressure to 10 psig, an expansion joint to absorb piping contraction and expansion, a sample port, and a gate valve for discharge line isolation. Unistrut type pipe supports were installed on the pad to support the above ground piping run and flow components (Appendix A, Sheets C-1 and C-8). The pad was constructed in March 1998, and the flow components were installed and perimeter fence erected in May 1998. Photographs of the collection/monitoring pad are included in Appendix I.

2.2.5 Conveyance System Installation

Approximately 1500 linear feet (lf) of below ground, single contained conveyance pipeline and associated valving was installed between the collection/monitoring pad and the sanitary sewer connection at Manhole # 187 (Appendix A, Sheets G-4 and C-5). The piping run from the collection/monitoring pad to the sewer control vault, located near HPS Manhole #187, consists of three inch, Schedule 80 PVC. Approximately 300 lf downstream from the collection/monitoring pad, the conveyance pipeline branches to a vault that contains a gate valve for manual air bleed/pipeline drainage (Appendix A, Sheet C-7). The sewer control vault was installed just upstream from the discharge point (Manhole #187) to control the discharge. The sewer control vault contains an inline three inch gate valve for flow isolation, an inline three inch check valve for back flow prevention, and a branch with a one inch gate valve for manual air bleed/pressure

relief (Appendix A, Sheet C-7). At the sewer control vault the pipe transists to four inch diameter, Schedule 80 PVC for a 20 lf run into Manhole #187.

The design pipeline route was not followed due to a wooden building that obstructed the planned pipeline alignment (Appendix A, Sheet C-5). Consequently, the pipeline was installed 20 feet away, adjacent to the planned alignment in order to avoid the obstruction. Three utility crossings were encountered during pipeline installation. A railroad crossing was encountered during construction which was not indicated on the design drawings. The trench beneath the rails was hand excavated and subsequently compacted with a hand wacker. The rails were not damaged during construction.

Most of the pipeline was buried in a trench 18.5 inches bgs with its invert at 12 inches bgs except at the two road crossings and one railroad crossing where the trench bottom was 30.5 inches bgs with the pipe invert 24 inches bgs. Also, between the sewer control vault and Manhole #187 the trench bottom was 55 inches bgs and the pipe invert 47.5 inches bgs. Prior to pipe installation three inches of compacted sand bedding was placed in the bottom of the trenches. The sand was placed around and up to three inches above the top of pipe with native fill used to backfill to six inches above the grade (Appendix A, Sheet C-6). Compaction was completed in six-inch lifts using a hand held Wacker and wheel rolled with a backhoe. Compaction testing was not performed in most areas, but was visually inspected and documented. Compaction testing was conducted at the road crossings where it was specified to be 90 percent. To ensure the specified compaction was obtained, field density tests were performed by Smith-Emery Geoservices using a Nuclear Density type gauge. The compaction test results are presented in Section E.4 of Appendix E.

The connection to the sanitary sewer was completed by removing an existing four inch diameter VCP line from sanitary sewer Manhole # 187 and replacing it with four inch diameter, Schedule 80 PVC conveyance pipe. The annular space between the pipeline and sewer manhole wall was sealed with grout. The remaining VCP sanitary pipeline was abandoned in place and plugged with concrete.

The conveyance pipeline integrity was verified by a pressure test conducted May 7, 1998 from Manhole #187 to the collection/monitoring pad influent isolation valve (V02). The pipeline was

water pressurized to 100 psig for a two hour period. No loss of pressure or leakage at joints and connections was observed. Pressure test data logs are presented in Section E.5 of Appendix E.

2.2.6 Electrical Installation

Electrical installation was conducted between May and July 1998 as two separate phases of work, high voltage and low voltage installations. The high voltage installation included tie-in to an existing transformer at Building 813, installation of electrical lines from the Building 813 transformer to the extraction pad (both above and below ground routing), and installation of a refurbished 45 kVA pole mounted transformer next to the extraction pad. The high voltage installation was performed by California Splicing and Testing (CST) of Byron, CA under subcontract to IT. Low voltage installation included connecting the 45 kVA pole mounted transformer output to the distribution panel on the extraction pad, installation of 208V/120V service runs, design and installation of the pre-fabricated well vault control panels, and installation of a four channel monitoring system. The low voltage installation was performed by G.W. Lynx of Vallejo, CA under subcontract to IT. High voltage and low voltage materials data and cut sheets are presented in Section B.2 of Appendix B.

2.2.6.1 High Voltage Installation

The high voltage electrical installation was conducted between May and July 1998 which included an 8 week delay for switchgear fabrication. Power to the site is provided by an existing 750 kilo volt amps (kVA) transformer located at Building 813 which is supplied with a 12000 volt (V) primary feed from PG&E, and metered prior to entering the transformer. The power is stepped down at the transformer from the 12000 primary feed to 2300V secondary distribution by the Navy to customers at Hunter's Point Shipyard. A load test was conducted between March 25 and March 28, 1998 on the load side of the 750 kVA transformer to assess power patterns and to quantify consumption. Results of the load test are presented in Section E.7 of Appendix E.

Cables were installed from the transformer secondary to a new 2300V, 75 amp, fused-disconnect and metering cabinet located next to the transformer. The existing cables and service to Building 813 were left intact and undisturbed. From the load side of the new disconnect, power was routed 3100 lf to the site through existing underground ducts and overhead on newly installed power poles as shown on sheet G-4 of Appendix A. The underground cable was routed through existing ducts that pass through Manholes 806, 405, 407, 408, 701, and 702 to an abandoned

switchgear near the charred ruins of Building 702. The abandoned switchgear was removed by CST. At the abandoned switchgear stub-up, the power run was transisted to an overhead run. Within three feet of the stub-up the first overhead power pole was installed. Eight power poles and overhead cables were installed to the groundwater extraction pad location along 6th Street and J Avenue. The last pole, located next to the pad, supports a new 45kVA pole mounted transformer. The transformer steps down the 2300V primary feed to 208Y/120V secondary power supplied to the groundwater extraction system power distribution panel (Appendix A, Sheet E-4). Once the installation was complete, a Hypotential Cable Test was performed to determine if the cable installed was suitable for energizing at system voltage stresses. The test results indicated the cable to be in good condition. The Hypotential Test Report is presented in Section E.8 of Appendix E.

2.2.6.2 Low Voltage Installation

The low voltage electrical installation was conducted between May and July 1998 which included an 8 week delay for fabrication of the high voltage switchgear. The low voltage power distribution panel, located on the groundwater extraction pad, is supplied with 208Y/120V from the pole mounted 45 kVA transformer. The power cables run from the transformer secondary down the pole then underground in 1 1/2-inch diameter, Schedule 40 PVC conduit to the pad mounted power distribution panel (Appendix A, Sheet E-3). The panel is mounted inside a locking, 304 SS, NEMA 4X enclosure securely attached to the pad with 3/8-inch diameter and five inch long concrete anchor bolts. The panel is supplied by a 4-wire, 208Y/120V 3-phase feed with ground, and furnished with a 100A main breaker, a 100A bus, 22 KAIC interrupt, and 30 poles. Fifteen of the poles are supplied with 120V, 20A breakers that service the nine extraction pumps, a modem dial out, a pressure switch and flowmeter, two future receptacles, and future outdoor lighting (Appendix A, Sheet E-1).

The power is routed underground from the power distribution panel to the extraction well control panels via Cantex rigid Schedule 40 (TC-40) electrical plastic conduits (EPC-40) buried in the header pipe trenches (Appendix A, Sheet C-6). The conduit for the southern extraction trench sumps was installed alongside the header pipe at 24 inches bgs, and the conduit for the northern extraction wells was installed above the header pipe at 24 inches bgs. Spare conduit with a pull

rope was installed along the entire northern run for future needs, and spare capped conduit was installed from the electrical pull boxes to each of the five stubout locations for future needs. The conduit and cable sizes are summarized in the Conduit Schedule (Appendix A, Sheet E-2).

The well/sump vault control panels are NEMA 4X enclosures constructed of 304 SS and contain an Allen Bradley 1-pole contractor with a thermal overload relay, a Warrick Controls Series 16M Motor Controller for the liquid level sensors, a hand-off-auto selector switch, and a lockable loadbreak switch (Appendix A, Sheet E-2). The thermal overload relay provides protection to the motor windings. The liquid level sensors control pump motor operations. The pump motor is shut off when the water level in the extraction well drops below the level switch low (LSL) sensor. When the water level reaches the level switch high (LSH) sensor the pump motor is turned on. The lockable load break switch provides power isolation and lockout capabilities at the well/sump vaults. The hand-off-auto selector switch allows hand and automatic operations. The hand setting bypasses the motor control devices (level sensors and pressure switch high) allowing manual operation. The auto setting operations include the automatic motor control devices. The vault control panel circuitry was pre-assembled by the electrical subcontractor prior to field mobilization and installation.

The pump power supply is routed from the vault control panel through a Franklin motor control box and then to the pump. The motor control box regulates the power supply to the motor during pump start-up and operations.

A RACO Chatterbox™, Model CB-4, Cellularm monitoring system was installed within the pad mounted electrical enclosure to dialout pre-programmed phone numbers upon a system alarm condition. The system utilizes three alarm inputs: one for power outage, a second for pressure switch high (PSH-10), and a third for flow quantifier-indicator (FT-30). Conduit and instrumentation wiring runs were installed from the flowmeter (FT-30) and pressure switch high (PSH-10) to the cellularm monitoring system. The system communicates by Cellular phone service. The monitoring system is shown on Sheet E-2 in Appendix A.

The level sensors wiring and motor conductor cables are routed to the vault control panel via one inch diameter, liquid tight flexible nonmetallic conduit (Type B) with liquid tight connectors. The pressure switch wiring is routed from its device to the vault control panel via 3/4-inch

diameter, liquid tight flexible nonmetallic conduit (Type B) with liquid tight connectors. The level sensors and pump conductor wiring passes from the first vault to the second vault through a Crouse-Hinds sealing fitting that minimizes the passage of gas, vapors, and flames through the conduit from the first vault (wellhead) to the second vault (discharge pipe valving and control panel). The wellhead details are shown on Detail 8B in Sheet C-7 in Appendix A.

The power distribution panelboard and pole mounted transformer grounds consist of two 5/8" diameter copper rods driven ten feet bgs connected with #1/0 bare copper cable (Appendix A, Sheet C-7). The ground rods are connected to the panelboard and transformer ground terminals by #1/0 copper cable routed through galvanized rigid conduit, for the aboveground portion of the run, and as bare wire for the below ground portion of the run.

The materials cut and data sheets are presented in Section B.2 of Appendix B.

2.2.7 Monitoring Network

Monitoring well and piezometer installation and development was completed by Gregg Drilling and Testing, Inc. of Martinez, California under subcontract to IT. The groundwater monitoring system included installation of four monitoring wells and 33 piezometers. The monitoring system was designed to monitor groundwater both downgradient and upgradient of the sheet pile wall (Appendix A, Sheet C-2). Installation activities began December 18, 1997 and were completed January 30, 1998. Field work was not continuous due to weather related delays. The monitoring well and piezometer survey data are presented in Section G.1 of Appendix G.

2.2.7.1 Monitoring Wells

Four monitoring wells were installed bayward of the sheet pile wall on December 18 and 19, 1997 (Appendix A, Sheet C-2). Initially, pilot borings were advanced to depths ranging from 8 to 25 ft bgs in order to assess subsurface stratigraphy and to provide design information for construction details. The pilot borings were continuously cored and visually logged using the USCS classification system. The boring logs are presented in section C.1 of Appendix C. Subsequently, the pilot borings were overreamed and the monitoring wells installed to depths ranging from 5 to 25 feet bgs. The wells were completed so that the screened intervals extended

from the top of Bay Mud to one foot above the static water table. The pilot borings and over reaming were completed using 8-inch and 12-inch O.D. hollow stem augers advanced by Marl 5-T and Mobile B-61 drill rigs.

Two of the four monitoring wells (MW60-1 and MW60-2) were constructed with four inch diameter, Schedule 40, flush-threaded, polyvinyl chloride (PVC) casing with pre-packed, 0.020-inch slotted screen. Stainless steel centralizers were used to minimize the potential for contact between the well casing and the borehole wall. Monitoring wells MW-60-3 and MW-60-4 were not constructed with the pre-pack well screens because it was impractical to cut them to the needed lengths. Screen lengths in these monitoring wells varied from two to three feet. The prepack screend intervals of these monitoring wells, were supplemented with clean, # 2/12 Lonestar sand. A one foot thick bentonite seal, composed of 3/8-inch meter bentonite pellets, was placed above the filter pack. A five percent bentonite/cement grout (sanitary seal) was tremied into place from the top of the bentonite seal to within one foot of the ground surface. The one foot space was left to allow completion of a concrete surface pad. The wells were completed approximately three feet ags in a lockable, galvanize-plated, stand-up well cover with a six inch thick concrete apron surrounded by three concrete filled bollards for protection. The monitoring well construction diagrams are presented in Section C.2 of Appendix C.

The monitoring wells were developed December 23, 1997 by surging, bailing, and pumping until aquifer parameters (pH, temperature, conductivity, and turbidity) stabilized. A minimum of three well volumes were removed during development. The well development records are presented in Section C.2 of Appendix C.

To reduce the potential for cross-contamination between borings, all downhole drilling equipment was steam cleaned with a high pressure steam washer and air-dried. All decon water was contained in 55 gallon drums marked, stored at the site in a double containment area, and analyzed prior to disposal. Soil-cuttings generated from drilling were contained in one 20 yd^3 roll-off bin, stored at the site, and analyzed prior to disposal. The analytical results for soil cuttings are included in Appendix E-1. The analytical results for the decon water are included in Appendix E-2.

2.2.7.2 Piezometers

Thirty-three piezometers were installed inland from the sheet pile wall between December 29, 1997 and January 30, 1998 (Appendix A, Sheet C-2). Initially, pilot borings were installed to assess depth to Bay Mud, and to provide design information for construction details. The pilot borings were continuously cored and visually logged using the USCS classification system. The piezometer boring logs are presented in Section C.1 of Appendix C. Subsequently, the pilot borings were overreamed and the piezometers installed with completion depths ranging from 4 to 17 feet bgs. The piezometers were installed at the top of the Bay Mud or a depth of approximately 15 feet bgs, whichever was encountered first. The pilot borings and piezometers were completed using both a track mounted Marl M5T rig and a Geoprobe rig.

The piezometers were constructed with 1-1/4 inch diameter, flush-threaded, 304 stainless steel (SS) casing with a five foot long 0.010-inch wire wrapped screen. The piezometers were completed approximately three feet ags in a lockable, galvanize-plated, stand-up well cover with a six inch thick concrete apron. Each piezometer was surrounded by three concrete filled bollards for protection. The piezometer construction diagrams are presented in Section C.1 of Appendix C.

2.2.8 Phase II Waste Material Handling and Disposal

Soil cuttings generated from drilling of the extraction wells were stored in a 20 yd^3 roll off bin, and later sampled on February 26, 1998 for waste characterization. Samples were analyzed by Curtis and Tompkins, Ltd in Berkeley, California. Analytical results received on March 12, 1998 revealed that the soil was characterized as a RCRA hazardous waste. The soil was accepted for disposal at the Laidlaw facility in Button Willow, California. The analytical results for the soil are included in Appendix E-1.

On May 27, 1998, just prior to transportation of the bin to the Button Willow facility, Navy CSO personnel reported that the soil may contain radioactive waste resulting from radium dials. On June 5, 1998, IT performed a screen of the bin for radioactivity, and collected samples in accordance with guidance provided by the Radiological Affairs Support Office (RASO). The on site screening was conducted using a sodium iodide meter with a detection limit of one picocurie per gram (pc/g). The bin was screened on the top and on all sides. Results of the screen showed no detectable levels of radioactivity. On the same day, IT collected three soil samples of the bin

for a gamma spec analysis to be performed at an off-site laboratory. The analytical results are included in Appendix E-11. The samples were sent to Quanterra, Inc. in Earth City, MO. The samples were composited in the laboratory and analyzed. Results of the gamma spec, provided on June 15, 1998, revealed lower than background levels of gamma emitting isotopes. Results were immediately forward to the Navy, and in turn RASO, for review. On June 23, 1998, the Navy directed IT to proceed with disposal of the bin at the Laidlaw facility. Transportation of the bin was completed on June 25, 1998 by Denbeste Trucking of Benicia, California and the soil was disposed at the Button Willow, California, facility.

3.0 Implementation Changes

Overall the groundwater extraction system and sheet pile wall installation were constructed as per the Design Submittals (Revision 0, May 1997; Revision 1, August 1997) and Work Plan (August 1996). However, several changes to the original design were made prior to field mobilization and during construction.

3.1 Sheet Pile Installation Realignment

As detailed in Section 2.2.1, several unanticipated subsurface conditions were encountered at the Site IR 1/21 Industrial Landfill. The first unanticipated condition was the release of an unknown gas, which occurred as a result of the pile driving activity in the vicinity of Station 13+57 (sheet G-4 of Appendix A). Initial attempts of minor realignments and avoidance were unsuccessful; selected piles met refusal within landfill debris; or, other minor realignment efforts resulted in subsequent releases of additional gas. The piling contractor requested permission to pre-auger portions of the alignment in an attempt to "push the obstructions aside"; however, this activity also led to the further release of the gas, and was discontinued.

In light of the unknown subsurface conditions, and unknown nature of the gas, IT and the Navy re-evaluated the potential health hazards associated with the planned installation method, and updated the Health and Safety Plan to reflect these concerns. The decision was made to complete the sheet pile installation in Level B Personal Protective Equipment (PPE). In this case, Level B PPE included: supplied air, full face respirators, PVC protective suits, steel toe shoes, solvex gloves, and a hard hat. Specialized air monitoring instruments, such as a chlorine meter, a hydrogen sulfide (H_2S) meter, various dragger tubes, and a Summa canister, were kept in the work area to sample and measure concentrations of gasses that might be released as a result of continued activity. A decontamination trailer was also set-up at the site to provide a shower facility, as required by the revised Health and Safety Plan. One result of the PPE up-grade was a lower production rate for the average amount of piling that could be installed in any given day.

Unsuccessful attempts at realignment and avoidance of the subsurface obstructions that tended to release the gas, resulted in a decision to off-set the containment barrier alignment in an inland direction by about 20 feet. At about Station 13+57 a Bethlehem RC-230 ninety degree sheet pile corner was installed to facilitate the realignment. Upon achieving the twenty foot off-set goal,

another Bethlehem RC-230 ninety degree sheet pile corner was installed, in the reverse direction, to allow the gradual sweep back toward the design alignment at about Station 14+37. Because of the unknown nature of the gas, several sheet piles were abandoned in place rather than pulling them and creating the potential for additional gas releases. These piles are located in the path of the design alignment, just north of the first sheet pile corner at Station 13+57. The approximate locations of the abandoned piles, and the realigned portion of the containment barrier are shown on Sheet C-9 of Appendix A.

3.2 Groundwater Extraction, Conveyance, and Monitoring Systems

The following is a list of the changes that were made during construction of the groundwater extraction system. In general, the changes outlined in this section are presented in chronological order. Changes documented by a Field Work Variance (FWV) or Request for Information (RFI), submitted by IT and approved by the Navy, include a reference to the associated FWV or RFI. Tables 1 and 2 of this document also provide a complete listings of all RFIs and FWVs.

IT submitted a Field Work Variance (FWV) # 001 dated December 2, 1997. The approval of the FWV allowed the excavation of "test trenches" at selected locations along the proposed route of the southern extraction trench. These test trenches were intended to determine the relative stability of the subgrade soils, when excavated for installation of the extraction trench. As a result of the test trenching, several buried drums of waste were encountered near Station 12+92. Trenching was stopped at that location upon encountering the drums.

The extraction system (both the northern and southern collection system) layout was realigned between Station 12+25 and Station 14+37 (as shown on sheet G-4 of Appendix A), due to the realignment of the sheet pile wall and the unexpected discovery of the drums which contained non-RCRA hazardous waste (Epoxy Resin and Caulking Putty). Extraction wells, piezometers, and monitoring wells were also relocated accordingly. To reduce the chance of encountering additional drums during construction, the southern extraction trench was shortened 30 feet, thus ending at Station 12+60 instead of the originally planned Station 12+90. These changes were approved by RFI # 003 dated December 15, 1997. Consequently, IT submitted FWV # 003 requesting permission/direction to ship the two waste drums to a non-RCRA Hazardous Waste Facility. FWV #003 was approved and the drums subsequently disposed of at the Chemical

waste Management facility in Kettleman Hills, CA. The Waste Manifest is presented in Section F.2 of Appendix F.

The sewer discharge conveyance pipeline route was realigned to avoid various surface obstructions including a wooden structure and a chain link fence crossing. This change was approved by Request for Information (RFI) # 001 dated October 30, 1997.

The well filter pack sand size was changed from # 2/16 to # 2/12 to prevent the sand from passing through the designed 0.020" slotted screen as approved by RFI # 004 dated December 18, 1997. RFI # 005 allowed deviation from the design requirements for a two foot long sediment trap and a one (1) foot thick bentonite seal for wells where the total well depths were insufficient to contain the appropriate amount of screen and specified sediment traps and bentonite seals. A minimum six-inch bentonite seal and six-inch sediment trap were installed in affected shallow wells.

Due to the presence of an oily product on the surface of the water in PZ-107C, IT submitted FWV # 002 dated January 6, 1998 requesting permission to sample the groundwater for PCB's. FWV #002 was approved and PZ-107C sampled. The analytical results did not reveal elevated concentrations of PCB's in the groundwater from PZ-107C. The Certificate of Analysis is presented in Section E.3 of Appendix E.

Class 1A permeable material was used for the Southern Extraction Trench permeable backfill instead of the designed Class 2 permeable material as approved by RFI # 006 dated January 12, 1998. The change was necessary due to backfill availability and did not adversely affect the integrity of the trench.

Concrete thrust blocks were installed to anchor all horizontal and vertical pipe bends in pressure related stress points in the extraction system as approved by RFI # 007 dated January 19, 1998.

At the request of the Navy, IT evaluated the available power from the transformer at Building 813. Field Variance # 004 dated March 4, 1998 grants IT permission to perform a three day load test to determine the maximum and minimum power demand at the Building 813 transformer.

The test results demonstrated that the transformer had available capacity to provide power to the Groundwater Extraction System. The load test results are presented in Section E.7 of Appendix E.

The material required for use as a backfill under the vault boxes was changed from pea gravel to Class II permeable backfill as approved by RFI # 009 dated March 11, 1998. The change was necessary due to the elevated costs of pea gravel resulting from the lack of local availability. The Class II provides a stable base for the vault boxes and did not adversely affect the integrity of the vault box installation.

The requirement to change concrete curing methods was approved by RFI # 009 dated March 11, 1998. The method was changed to a CalTrans approved curing method using a non-oil base curing compound. The curing compound provided a slow cure to ensure maximum yield strength. Use of the curing compound also ensured an attractive finish for the exposed concrete by eliminating imperfections associated with other curing methods as outlined in Attachment 001 of RFI # 009.

During installation of the planned rubber compression coupling between the sewer discharge conveyance pipeline and the existing vitrified clay pipe (VCP) sanitary sewer pipe, it was identified that the VCP integrity was suspect (the bell/spigot joints were worn and loose) and would probably not provide leak free operation. Consequently, IT submitted FWV # 005 dated May 5, 1998 requesting permission to remove the 14 feet of existing VCP and replace with Schedule 80 PVC piped directly into Manhole 187, which was completed upon approval.

The following field design changes were approved in the field by the ROICC and the Navy RPM. These changes amount to only minor changes typical of construction projects. Therefore, these changes were made in the field and documented herein:

- Southern extraction trench pumpout EW-108 and EW-122 were relocated approximately ten feet north and south, respectively, from the planned locations in order to not jeopardize the integrity of existing piezometers located near the pumpout excavations.

- The southern extraction trench collection pipe was adjusted upwards (i.e., shallower) to coincide with the Bay Mud contact, the southern section of the collection pipe is at approximately 1.7 feet MSL and the northern section at approximately 1.0 feet MSL.

- The southern extraction trench width was increased from 18 inches to 60 inches because of the need for trench boxes to provide trench stability. The collection pipe's filter pack was enlarged to cross-sectional dimensions of an approximately four feet wide and two feet high mound.

- The southern extraction trench system-header pipe route was moved to the east side of the collection sumps to provide a straighter run to the collection and monitoring pad.

- One inch unions were added to each extraction well's discharge piping to serve as a maintenance piping break point for service of the downwell pump and level sensors or wellhead piping.

- One inch ball valves were added to the discharge piping at each extraction well's top of casing which served as block valves during the pipeline pressure tests.

- The extraction wells sample port valve and pressure switch-isolation valve sizes were reduced from three quarter inch to one half inch for better efficiency and structural purposes.

- All extraction wellhead piping and appurtenances were glued or threaded fittings except for the globe valve.

- Torque arrestors were added to all extraction well pumps to provide stability during start-up and shutdown.

- A pressure gauge was added to the pressure switch branch.

- Extraction wells level sensor high-high (LSHH) were not installed due to unnecessity from short saturated thicknesses. Two of the three installed electrodes monitor level and the third serves as a ground reference.

- The planned inline expansion joint at the sewer control vault was not installed since the entire pipeline was buried and no significant length changes are expected.

- The planned four inch flange at the sewer control vault was not installed since the inline check valve is flanged, which can serve as a pipeline break point for maintenance.

- Parking blocks were installed as protection around the extraction wellhead vaults and electrical pull boxes instead of the planned bollards.

- The sewer discharge conveyance line was piped directly into Hunter's Point Shipyard Sanitary Sewer Manhole #187. The conveyance line replaced an existing four inch vitrified clay pipe (VCP) which was cut back approximately 14 feet and abandoned by concrete plugging.

- Two concrete vaults were used to house the sewer discharge control piping instead of one due to space requirements.

3.2.3 High Voltage Electrical System

Several changes were made to the high voltage electrical system for this project. Initially it was anticipated that Pacific Gas and Electric (PG&E) would provide an overhead high voltage (12 kV) drop, either at the point of use, or near Building 810, the Golden Gate Railroad Museum located approximately 1500 feet from the proposed point of use). Following extensive discussions and communication with PG&E, it was determined that, due to the upcoming deregulation of the power industry, PG&E was not interested in extending high voltage service drops into areas of limited use (such as the IR 1/21 Industrial Landfill). An additional point of conflict on PG&E's behalf was the need for HAZWOPER forty hour trained crews. Apparently PG&E has a very limited number of HAZWOPER trained crews and scheduling the HAZWOPER trained crews extended into the six months or more range.

PG&E's proposal was to supply a service drop in the vicinity of Building 810, but, agreements on acceptable pole locations could not be reached with the Golden Gate Railroad Museum personnel. PG&E then proposed a 480V, 100 amp service drop in the vicinity of Building 813. IT's evaluation of the costs associated with the use of 480V, 100 amp service, proved that option to be uneconomical. This was based upon the projected additional expense associated with very large wire size, and projected future operational expenses associated with inefficiencies due to line losses. The proposed use of the PG&E power supply was rejected at that point.

The Navy Caretaker Site Office (CSO) personnel suggested the use of Navy supplied 12 kV Primary Power, as well as, the use of 300 kVA (12,000V delta to 208V wye) Navy owned transformer. Several drop locations were reviewed for the 12kV supply option. Following an evaluation of the available options by an electrical consultant (Alderman), it was determined most feasible to construct a 2,400V service line from a drop point in the vicinity of Building 813, to the point of use, nearly 3,000 ft. away. This approach also included the use of 300 kVA (2,400V delta to 208V wye) Navy owned transformer, which was tested and evaluated as part of the initial option evaluation.

The interim design option that was adopted included tapping into the 2,400V Navy supplied Primary Power at the Building 813 transformer, and running new supply (within existing underground electrical ducts) from that point, to the Building 710 Ruin. From the Building 710 Ruin, the power drop was originally designed to run underground to the point of use. At this point, the underground option was the most economically feasible because it was planned to use the same utility trench as the wastewater discharge line. However, maintenance concerns, and code requirements for shallow burial of high voltage power lines, and potential scheduling conflicts later proved this option to be uneconomical. At the same time, an in-depth evaluation of the use of the Navy supplied 300 kVA transformer proved to be economically unfeasible because of the wire size requirements, and it's projected excessive power consumption.

The options that were finally chosen included an underground 2,400V Navy supplied primary power distribution line from the Building 813 transformer to the Building 710 Ruin. At the Building 710 Ruin, the 2,400V Primary Power distribution line was run above ground to the point of use. The overhead lines were hung from new poles placed by IT's high voltage electrical subcontractor. The transformer that was selected for use consists of a rebuilt, pole mounted 45 kVA unit, that transforms the 2,400V delta feed into a 208V wye supply.

3.2.4 Extraction Pad Design/Layout

The preliminary design included a Navy owned 300 kVA transformer as suggested by CSO personnel, (see Section 3.2.3) located on the extraction system controls pad. However, follow up detailed design work replaced the 300 kVA transformer with a 45kVA pole mounted transformer. (The larger transformer was too inefficient for the project power demands). As a result of changing to a smaller transformer, the layout of the Extraction System Controls Pad was

changed from the initial plan. The extraction pad design layout is shown on Sheet C-8 in Appendix A.

3.2.5 Sanitary Sewer Cleaning

The sanitary sewer line between MH-187 and Pump Station A were cleaned by MIXIS under subcontract to IT Corporation. In June 1997, MIXIS cleaned and conducted a final video survey of the section of sanitary sewer between MH-187 and Pump Station A. The solids that were generated from this activity were treated and disposed along with solids from the storm drain cleaning activity that was being conducted under EFA West Delivery Order 061. The final video survey of the subject section of sanitary sewer line revealed that the line was intact and in relatively serviceable condition.

4.0 Groundwater Extraction System Performance

System Start-Up/"Shakedown" occurred between July 22 and July 29, 1998 which included testing all systems, adjusting alarm set points, troubleshooting, and pumping from each well.

Once startup/shakedown was completed IT conducted a 24 hour pump test to provide representative groundwater samples for discharge permitting, and provide data to help further define the site's hydrogeologic characteristics. All extraction wells and the southern extraction trench were pumped simultaneously during the test.

4.1 Extraction System Start-Up /"Shakedown"

The extraction wellheads high pressure switches were adjusted to a 95 psig set point. The collection/monitoring pad pressure reducing valve (PRV-40) was adjusted to maintain a discharge pressure of 30 psig. Troubleshooting was completed on the low voltage electrical, system controls, and appurtenances. Short duration step-drawdown pumping tests were performed on individual extraction wells. The step-drawdown data is presented in Section E.9 of Appendix E. The data provided valuable information used to determine pumping rates for the 24 hour Pump Test and for determining standard operating conditions.

Groundwater extracted during start-up/shakedown was discharged directly into to a 21,000 gallon temporary storage tank (Baker Tank) pending analysis for disposal/discharge.

Once the system was operating properly, the RACO Chatterbox™ was programmed and tested. The Chatterbox™ was set-up to dial out upon alarm conditions of a power outage, high pressure at the monitoring/collection pad, and when the total flow drops below 0.1 gpm.

4.2 Twenty Four (24) Hour Pump Test

Water level measurements were taken at 50 observation points, consisting of nine extraction wells, eight monitoring wells, and 33 piezometers. Pressure transducers were installed in 16 of the observation points to automatically record head level data on a programmed time schedule during the separate stages of the testing. Additionally, water levels at these 16 observation points were hand measured before, during, and after the test. To filter out "noise" in the measured head

levels due to barometric changes, a barometric pressure transducer was monitored during all stages of the testing. Water levels in the 34 other observation points were measured with a Solinst electronic water-level meter.

The pressure transducers were installed July 28, 1998 to allow their cables to stretch and to equilibrate with down-well conditions prior to data collection. The transducers were hung so that the probe tip was approximately six inches from casing bottom. Transducer recorders (Hermits) were programmed to reference top of casing when measuring head level changes.

To assess tidal influence, static groundwater conditions were monitored for 24 hours prior to beginning the pump test. Static conditions were monitored from approximately 10:20 AM on July 29, 1998 to 10:30 AM on July 30, 1998. The data was recorded on a linear time scale at ten minute intervals. Preliminary review of the raw data showed no obvious observable tidal influence inside or outside the sheet pile wall.

The pumping test commenced at approximately 12:30 PM on July 30, 1998 with an initial cumulative pumping rate of 35 gpm. The initial individual well flow rates were as follows:

Extraction Well ID	Initial Flow Rate (gpm)
EW-108	5
EW-122	5
EW-134	3
EW-138	4
EW-142	3
EW-146	5
EW-150	4
EW-154	3
EW-158	3

The pumping rates were chosen based on the step-drawdown testing that was performed during system start-up/shakedown. Prior to pump test start the Hermits were re-programmed to record data on a logarithmic scale with twenty minutes as the largest time interval. Twenty hours into the test most of the extraction well drawdowns had increased to point that caused pumps to cycle on/off. Subsequently, flow rates were increased at a couple locations where minimal drawdown

was observed and maintained until the end of the test. Following are the individual well flow rates at the 20th hour of the pump test:

Extraction Well ID	Twenty Hour Flow Rate (gpm)
EW-108	Pump Cycling On/Off - Auto mode
EW-122	Pump Cycling On/Off - Auto mode
EW-134	Pump Cycling On/Off - Auto mode
EW-138	4
EW-142	Pump Cycling On/Off - Auto mode
EW-146	Increase flow to 9.5
EW-150	4
EW-154	Pump Cycling On/Off - Auto mode
EW-158	Increase flow to 5

Upon pumping-test completion, the pumps were turned off and the Hermit data-loggers stepped to restart the log time-scale recording, in order to monitor recovery.

The average cumulative flow rate for the pumping test was 23 gpm based on individual well totalizer readings. Additionally, average flow rates per well for the pumping test were calculated based on the wellhead totalizers. The average flows were as follows:

Extraction Well ID	Average Flow Rate (gpm)
EW-108	2
EW-122	2
EW-134	1
EW-138	3
EW-142	1.6
EW-146	4.5
EW-150	3.4
EW-154	2
EW-158	3

Preliminary review of the pumping test data shows observable drawdown at nine of the ten non-pumping well locations monitored with Hermit data-loggers and transducers. The observed head differential for all locations monitored by Hermits from test start to test end are as follows:

Location ID	Approximate Head Change (ft)
EW-108	-3.38
EW-122	-2.04
EW-134	-10.0
EW-138	-0.92
EW-142	-5.49
EW-146	-0.55
EW-150	-4.16
EW-154	-3.19
EW-158	-0.91
PZ-100B	-0.24
PZ-107C	-1.07
PZ-121B	-1.13
PZ-121C	-0.05
PZ-138A	-0.13
PZ-138B	-0.12
PZ-138C	-0.23
PZ-138D	-0.21
PZ-150B	-0.32
PZ-150C	-0.28

The Static, Pumping, and Recovery Test data is presented in Section E.9 of Appendix E. Approximately 33,000 gallons of water were extracted during the test. The water was discharged directly into three 21,000 gallon temporary storage tanks (Baker Tanks) pending analysis for disposal/discharge.

4.3 Discharge Permit Requirements

At the conclusion of the 24 hour pump test a sample of the system effluent was collected and analyzed in accordance with the City of San Francisco application for batch discharge requirements. The sample was analyzed by Applied Physics and Chemistry Laboratory (APCL) in Chino, California in August, 1998. The application for discharge was submitted to the City of San Francisco for approval in September, 1998. A discharge permit was received from the City of San Francisco on December 15, 1998, and is in effect until December 31, 2001. Appendix H of this report is a copy of the permit. Operation and maintenance of the extraction system will take place as part of Delivery Order 83 under the same contract with the Navy. Delivery order 83 also includes preparation and submittal of the system operation and maintenance manual.

5.0 Certification

I, Valerie Crooks, certify that, to the best of my knowledge, the information presented in this Post-Construction Report is accurate and complete. I further certify that the Post-Construction Report has been prepared under my supervision and direction, that I am familiar with the site discussed and that the work described herein was performed in accordance with generally accepted practices and procedures.

REGISTERED PROFESSIONAL ENGINEER
VALERIE E. CROOKS
41974
EXP 03/31/00
CIVIL
STATE OF CALIFORNIA

Valerie Crooks
R.C.E. No. C41974 expiration 03/31/00

6.0 References

Hunter's Point Annex, San Francisco, California, *Draft Engineering Evaluation/Cost Analysis and Addendum, Site IR-1/21 Industrial Landfill Groundwater Plume*, PRC EMI, March 13, 1996a

Hunter's Point Annex, San Francisco, California, *Draft Final Engineering Evaluation/Cost Analysis and Addendum, Site IR-1/21 Industrial Landfill Groundwater Plume*, PRC EMI, May 24, 1996b

Hunter's Point Annex, San Francisco, California, *Engineering Evaluation/Cost Analysis and Addendum, Site IR-1/21 Industrial Landfill Groundwater Plume,* PRC EMI, July 26, 1996c

Hunter's Point Annex, San Francisco, California, *Draft Action Memorandum, Site IR-1/21 Industrial Landfill Groundwater Plume*, PRC EMI, August 13, 1996d

Hunter's Point Annex, San Francisco, California, *Removal Action Implementation Work Plan, Site IR-1/21 Industrial Landfill Groundwater Plume,* PRC EMI, May 1, 1996e

Hunter's Point Shipyard, San Francisco, California, *Removal Action Work Plan, Site IR-1/21 Industrial Landfill*, IT Corporation, August 29, 1996a

Hunter's Point Shipyard, San Francisco, California, *Contractor Quality Control and Sampling and Analysis Plan, Site IR-1/21 Industrial Landfill*, IT Corporation, August 29, 1996b

Hunter's Point Shipyard, San Francisco, California, *Health and Safety Plan, Site IR-1/21 Industrial Landfill*, IT Corporation, August 29, 1996c

Hunter's Point Shipyard, San Francisco, California, *Design Submittal for Sheet Pile Containment Barrier, Site IR-1/21 Industrial Landfill*, IT Corporation, August 8, 1997a

Hunter's Point Shipyard, San Francisco, California, *Design Submittal for Groundwater Extraction System, Site IR-1/21 Industrial Landfill,* IT Corporation, May 14, 1997b

TABLE 1

REQUESTS FOR INFORMATION (RFI'S)
SITE IR-1/21 REMOVAL ACTION GROUNDWATER EXTRACTION SYSTEM AND SHEET PILE CONTAINMENT BARRIER

Date	RFI No.	Description	Response Date
10-30-97	001	Realignment of the Conveyance Pipeline to avoid various surface obstructions.	11-24-97
12-02-97	002	Request permission to use a Navy owned 300 kVA transformer.	Canceled
12-15-97	003	Realignment of the extraction system and relocation of extraction wells, piezometers, and monitoring wells due to sheet pile wall realignment.	12-17-97
12-18-97	004	Changing the backfill sand size requirement from 2/16 sand to 2/12 sand. Deletion of centralizers on the wells. Deviation of well screen length requirements where Bay Mud is encountered at shallower depths.	12-22-97
12-19-97	005	Deviation from the design requirements for a 2 foot long sediment trap and a 1 foot long bentonite seal on wells where the total depth is insufficient to contain the appropriate amount of screen and a 2 foot long sediment trap and a 1 foot long bentonite seal.	12-22-97
01-12-98	006	Change the permeable backfill in the extraction trench from a Class 2 permeable material to a Class 1A.	01-21-98
01-19-98	007	Anchor all horizontal and vertical pipe bends in pressure related stress points in the extraction system with concrete thrust blocks.	01-28-98
01-21-98	008	Sample the on-site water in storage to establish the status of water as hazardous or non-hazardous in order to evaluate the 90-day holding time applicability.	01-28-98
03-11-98	009	Change the material required for use under the vault boxes from pea gravel backfill to a Class II permeable backfill. Replace the requirement to use the concrete curing methods in the Design Specifications to a CalTrans approved curing method using a non-oil base curing compound.	03-11-98

TABLE 2

FIELD WORK VARIANCES
SITE IR-1/21 REMOVAL ACTION GROUNDWATER EXTRACTION SYSTEM AND SHEET PILE CONTAINMENT BARRIER

Date	Variance No.	Description	Response Date
12-02-97	001	Excavating a "test trench" along the proposed location of the Extraction Trench to determine the amount and location of any obstacles which would require realignment of the extraction trench.	12-10-97
05-28-97	2	Cleaning of 860 feet of sanitary sewer lines rather than plugging of storm drains	05-29-97
01-06-98	002	Collecting a groundwater sample from piezometer PZ-107C and performing an analytical test for PCB's only.	01-07-98
01-19-98	003	Ship the two (2) waste drums unearthed during excavation of the "test trench" to a Hazardous Waste Site for disposal.	01-30-98
03-04-98	004	Perform a three day load test at the transformer located at Building 813.	03-05-98
05-05-98	005	Replace approximately 14 feet of existing 4" SSNV VCP with 4" Schedule 80 PVC at Manhole 187.	05-06-98

N00217.003880
HUNTERS POINT
SSIC NO. 5090.3

APPENDIX A
AS-BUILT CONSTRUCTION DRAWINGS

FINAL POST-CONSTRUCTION REPORT
SITE IR 1/21 INDUSTRIAL LANDFILL
GROUNDWATER EXTRACTION SYSTEM/
CONTAINMENT BARRIER

DATED 01 JULY 1999

List of Drawings

Drawing	*Title*
G-1	Cover Sheet
G-2	Site Location Map
G-3	Standard Symbols - As Built
G-4	Site Layout - As Built
C-1	Piping and Instrumentation Diagrams - As Built
C-2	Sheet Pile Wall and Groundwater Extraction System Layout - As Built
C-3	Trench and Well Profile - As Built
C-4	Trench and Well Details - As Built
C-5	Pipeline Route - As Built
C-6	Pipeline Details - As Built
C-7	Vault Piping Details - As Built
C-8	Collection and Monitoring Pad - As Built
C-9	Northern Sheet Pile Wall Section, Plan and Profile Views - As Built
C-10	Southern Sheet Pile Wall Section, Plan and Profile Views - As Built
C-11	Alignment of Sanitary Sewer Discharge Line
E-1	Electrical One Line Diagram and Details
E-2	Electrical Plan As Built
E-3	Motor Control Schematic and Panel Design As Built
E-4	Electrical Layout Collection and Monitoring Pad As Built

SHEET PILE WALL AND GROUNDWATER EXTRACTION SYSTEM

SITE IR-1/21: INDUSTRIAL LANDFILL REMOVAL ACTION
GROUNDWATER EXTRACTION SYSTEM/CONTAINMENT BARRIER
HUNTERS POINT SHIPYARD
SAN FRANCISCO, CALIFORNIA

PREPARED IN COOPERATION WITH

DEPARTMENT OF THE NAVY
Engineering Field Activity West
Naval Facilities Engineering Command
San Bruno, California

June 1999

DRAWING LIST

FILE NUMBER	SHEET NUMBER	TITLE	REVISION
		GENERAL	
767497-E16	G-1	COVER SHEET AND DRAWING LIST	AS-BUILT
767497-E18	G-2	LOCATION MAP	AS-BUILT
767497-E17	G-3	STANDARD SYMBOLS	AS-BUILT
767497-E15	G-4	SITE LAYOUT	AS-BUILT
		PROCESS AND SHEET PILE	
767497-E34	C-1	PIPING AND INSTRUMENTATION DIAGRAM	AS-BUILT
767497-E32	C-2	SHEET PILE WALL AND GROUNDWATER EXTRACTION SYSTEM LAYOUT	AS-BUILT
767497-E21	C-3	TRENCH AND WELL PROFILE	AS-BUILT
767497-E33	C-4	TRENCH AND WELL DETAILS	AS-BUILT
767497-E37	C-5	PIPELINE ROUTE	AS-BUILT
767497-E35	C-6	PIPELINE DETAILS	AS-BUILT
767497-E38	C-7	VAULT PIPING DETAILS	AS-BUILT
767497-E36	C-8	COLLECTION AND MONITORING PAD	AS-BUILT
767497-E41	C-9	PLAN AND PROFILE VIEWS - NORTHERN SHEET PILE WALL SECTION	AS-BUILT
767497-E22	C-10	PLAN AND PROFILE VIEWS - SOUTHERN SHEET PILE WALL SECTION	AS-BUILT
767497-E40	C-11	ALIGNMENT OF SANITARY SEWER DISCHARGE LINE	AS-BUILT
		ELECTRICAL	
767497-E43	E-1	ELECTRICAL ONE LINE DIAGRAM AND DETAILS - (HIGH VOLTAGE)	AS-BUILT
767497-E25	E-2	ELECTRICAL PLAN	AS-BUILT
767497-E31	E-3	MOTOR CONTROL SCHEMATIC AND PANEL DESIGN	AS-BUILT
767497-E39	E-4	ELECTRICAL LAYOUT - COLLECTION AND MONITORING PAD	AS-BUILT

REVISION	DATE	DESCRIPTION	BY	BY
1	6/22/99	AS BUILT	SJZ	DB

INTERNATIONAL TECHNOLOGY CORPORATION, 4585 PACHECO BLVD. MARTINEZ, CA. 94553 (510) 372-9100

DEPARTMENT OF THE NAVY
ENGINEERING FIELD ACTIVITY WEST
SAN BRUNO, CALIFORNIA

DESIGNED: R. HAYASHI
DRAWN: SJZ 1/26/99
CHECKED:
SUBMITTED:
DATE APPROVED:

HUNTERS POINT SHIPYARD SAN FRANCISCO, CALIFORNIA

SITE IR-1/21 INDUSTRIAL LANDFILL
GROUNDWATER EXTRACTION SYSTEM/
CONTAINMENT BARRIER
COVER SHEET AND DRAWING LIST

SCALE: NOT TO SCALE
SPEC No.
SHEET G-1 1 OF 19
FILE No. 767497-E16

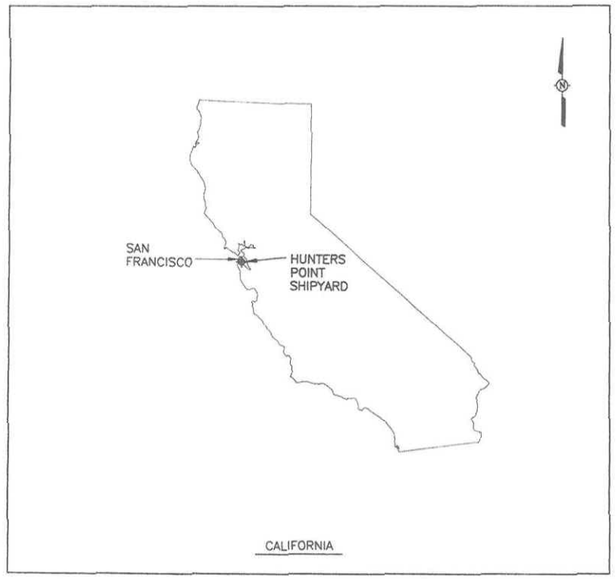

REGIONAL LOCATION

NOT TO SCALE

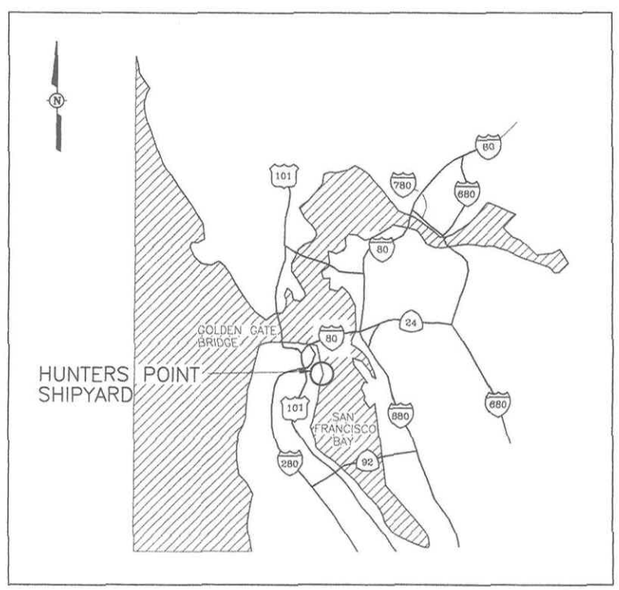

VICINITY MAP

NOT TO SCALE

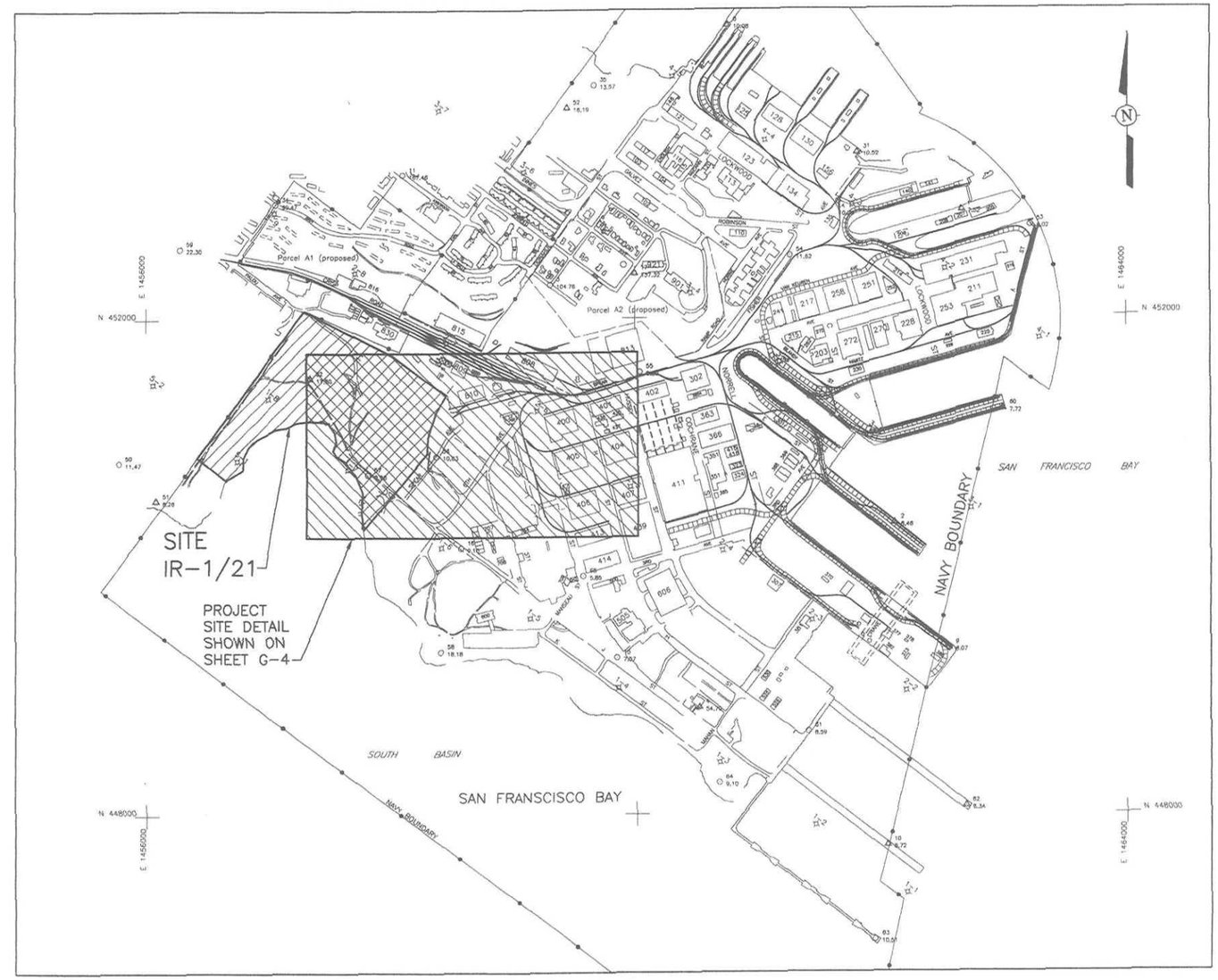

SITE LOCATION MAP

APPROXIMATE SCALE

0 500 1000 FEET

NOTE:
THIS MAP WAS PREPARED USING PHOTOGRAMMETRIC COMPUTER AIDED DRAFTING TECHNIQUES BY TOWILL, INC.
GRID IS BASED ON CALIFORNIA COORDINATE SYSTEM, ZONE 3.
CSF = 0.9999286.
DATE OF PHOTOGRAPHY NOVEMBER 12, 1993.
STATION BOUNDARY WAS DETERMINED FROM NAVFAC DWG. NO'S 1045757, 1045758, 1045759.

NOTE:
FIELD SURVEY CONTROL BY TOWILL, INC.
ELEVATIONS ARE BASED ON 1929 N.G.V.D.
TO CONVERT MAP ELEVATIONS TO M.L.L.W., ADD 3.12'.

CONTROL SUMMARY

STATION	NORTH	EAST	ELEVATION	DESCRIPTION
1	452846.99	1462667.06	7.52	USC&GS "HUNTERS PT, EAST"
2	450343.43	1462112.85	8.46	PK NAIL & WASHER
3			104.76	PK NAIL & WASHER
4	448862.14	1460515.85	54.70	USC&GS "BLDG 521"
8	454365.91	1460759.24	10.80	PK NAIL & WASHER
9			8.07	PK NAIL & WASHER
10	447737.64	1462046.41	8.72	PK NAIL & WASHER
11			167.46	PK NAIL & WASHER
14			10.29	PK NAIL & TOWILL WASHER
15			7.57	PK NAIL & WASHER
16			9.10	PK NAIL & WASHER
17	452358.58	1460002.32	137.32	NEW "COLEMAN"
31	453324.86	1461819.11	10.52	PK NAIL & TOWILL WASHER
32	451528.24	1457340.05	17.80	REBAR & TOWILL CAP
34			99.47	MOST NW OF 4 LEAD & TACKS
35			13.57	PK NAIL & TOWILL WASHER
50			11.47	CHISELED "X"
51	450547.16	1456077.14	8.26	REBAR & TOWILL CAP
52	453703.18	1459452.75	16.19	SURVEY SPIKE
53			8.02	SURVEY SPIKE
54			11.62	SURVEY SPIKE
55			9.39	SURVEY SPIKE
56			10.63	SURVEY SPIKE
57			9.96	REBAR & TOWILL CAP
58			18.18	REBAR
59			22.30	SURVEY SPIKE
60	451248.59	1462996.55	7.72	SURVEY SPIKE
61			8.59	SURVEY SPIKE
62	448051.68	1462689.36	8.34	CHISELED "X"
63			10.51	CHISELED "X"
64			9.10	SURVEY SPIKE
65			5.85	SURVEY SPIKE

○ VERTICAL CONTROL
△ HORIZONTAL CONTROL
◬ HORIZONTAL & VERTICAL CONTROL
◇ PHOTO CENTER

REVISION	DATE	DESCRIPTION	BY	BY
1	5/5/99	AS BUILT DRAWINGS	TRS	DB

INTERNATIONAL TECHNOLOGY CORPORATION
4585 PACHECO BLVD.
MARTINEZ, CA. 94553
(925) 372-9100

DEPARTMENT OF THE NAVY
ENGINEERING FIELD ACTIVITY WEST
SAN BRUNO, CALIFORNIA

DESIGNED: R. HAYASHI
DRAWN: J.A.C. 1/26/99
CHECKED:
SUBMITTED:
DATE APPROVED:

HUNTERS POINT SHIPYARD SAN FRANCISCO, CALIFORNIA

SITE IR-1/21 INDUSTRIAL LANDFILL GROUNDWATER EXTRACTION SYSTEM/ CONTAINMENT BARRIER

LOCATION MAP

SCALE: AS SHOWN
SPEC No.
SHEET G-2 2 OF 19
FILE No. 767497-E18

LINE SYMBOLS

- PRIMARY PROCESS FLOW LINE
- UTILITY/SECONDARY PROCESS LINE
- GENERAL LIMIT LINE
- ELECTRIC/SIGNAL LINE
- INSTRUMENT PANEL
- FENCE
- UNDERGROUND ELECTRIC
- OVERHEAD ELECTRIC
- GROUND
- TRANSITION POINT BETWEEN ABOVE AND BELOW GROUND SERVICE (ELECTRICAL AND WATER LINES)

PIPING/MECHANICAL SYMBOLS

- BASKET STRAINER
- CONCENTRIC REDUCER
- EXPANSION JOINT
- MOTOR
- Y-TYPE SEDIMENT STRAINER
- FLANGE
- UNION
- SUBMERSIBLE WELL PUMP

INSTRUMENT AND CONTROL SYMBOLS

- FIELD MOUNTED INSTRUMENT
- PANEL MOUNTED INSTRUMENT

VALVE SYMBOLS

- BALL VALVE
- CHECK VALVE
- GATE VALVE, OPEN
- GATE VALVE, CLOSED
- GLOBE VALVE
- NEEDLE VALVE, CLOSED
- PRESSURE REDUCING VALVE

LAYOUT SYMBOLS

- CPT POINT
- MONITORING WELL
- EXTRACTION WELL
- PIEZOMETER
- POWER POLE
- HORIZONTAL COLLECTION PIPE

DETAIL/SECTION REFERENCE

1 / C-2 — C-3

- DETAIL/SECTION DESIGNATION
- SHEET NUMBERS WHERE DETAIL/SECTION ARE REFERENCED
- SHEET NUMBER WHERE DETAIL/SECTION IS LOCATED

– / C-9

- DETAIL/SECTION REFERENCES ENTIRE SHEET
- SHEET NUMBER WHERE DETAIL/SECTION IS LOCATED

INDICATES EXTENT OF DETAIL

INSTRUMENT IDENTIFICATION

FIRST LETTER	PROCESS VARIABLE OR ACTUATION	SUBSEQUENT LETTER	PROCESS VARIABLE OR ACTUATION
F	FLOW RATE	A	ALARM
H	HAND (MANUALLY)	C	CONTROL
L	LEVEL	E	ELEMENT
P	PRESSURE/VACUUM	G	GAUGE
		H	HIGH
		I	INDICATING
		L	LOW
		F	FLOW
		Q	TOTALIZING
		S	SWITCH
		T	TRANSMITTER
		V	VALVE

PROCESS LINE DESIGNATIONS

XX"-XXX-XXX

- PIPE MATERIAL OF CONSTRUCTION
- FLUID SERVICE
- LINE SIZE

FLUID SERVICE	
GW	GROUNDWATER

MATERIAL OF CONSTRUCTION	
PVC80	POLYVINYL CHLORIDE, SCHEDULE 80

MISCELLANEOUS

EW	EXTRACTION WELL
HOA	HAND/OFF/AUTO
HS	HAND SWITCH
MC	MOTOR CONTROLLER
NO	NORMALLY OPEN
NC	NORMALLY CLOSED
PRV	PRESSURE REDUCING VALVE
SP	SAMPLE PORT
TOC	TOP OF CASING
WHM	WATT PER HOUR METER
MW	MONITORING WELL
PZ	PIEZOMETER
MH	MANHOLE

REVISION	DATE	DESCRIPTION	BY	BY
1	5/5/99	AS BUILT DRAWINGS	TRS	DB

INTERNATIONAL TECHNOLOGY CORPORATION, 4585 PACHECO BLVD, MARTINEZ, CA 94553, (925) 372-9100

DEPARTMENT OF THE NAVY
ENGINEERING FIELD ACTIVITY WEST
SAN BRUNO, CALIFORNIA

DESIGNED: R. HAYASHI
DRAWN: J.A.C. 1/26/99
CHECKED:
SUBMITTED:
DATE APPROVED:

HUNTERS POINT SHIPYARD SAN FRANCISCO, CALIFORNIA

SITE IR-1/21 INDUSTRIAL LANDFILL GROUNDWATER EXTRACTION SYSTEM/ CONTAINMENT BARRIER

STANDARD SYMBOLS
AS-BUILT

SCALE: NOT TO SCALE
SPEC No.
SHEET: G-3
3 OF 19
FILE No. 767497-E17

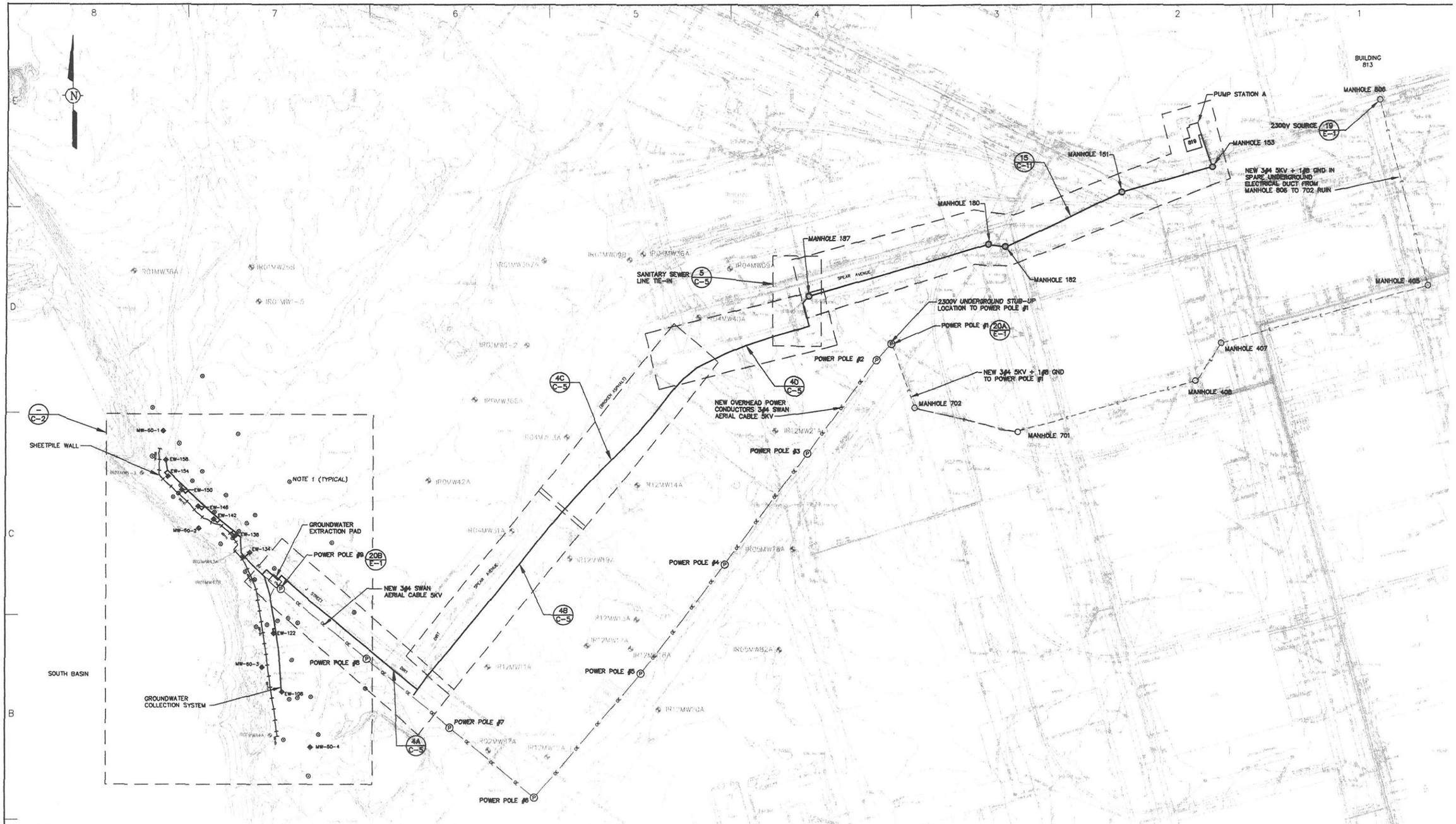

LEGEND

- ◆ MONITORING WELL
- ⊙ PIEZOMETER LOCATION
- ◆ EXTRACTION WELL
- O MANHOLE
- Ⓟ POWER POLE
- —— E —— UNDERGROUND ELECTRICAL LINE (UTILIZED EXISTING NAVY DUCTS)
- —— OE —— *OVERHEAD ELECTRICAL LINE*
- ——— EXTRACTION SYSTEM PIPELINE
- +-+-+- SHEET PILE WALL

NOTES :

1) SEE SHEET C-2 FOR PIEZOMETER IDENTIFICATION NUMBERS.

SCALE

0 80 160 240 FEET

XREF: HPIR121A

REVISION	DATE	DESCRIPTION	TRS	DR BY
1	5/5/99	AS BUILT DRAWINGS		

INTERNATIONAL TECHNOLOGY CORPORATION
4585 PACHECO BLVD.
MARTINEZ, CA. 94553
(925) 372-9100

DEPARTMENT OF THE NAVY
ENGINEERING FIELD ACTIVITY WEST
SAN BRUNO, CALIFORNIA

DESIGNED: R. HAYASHI
DRAWN: J.A.C. 1/27/99
CHECKED:
SUBMITTED:
DATE APPROVED:

HUNTERS POINT SHIPYARD SAN FRANCISCO, CALIFORNI

SITE IR-1/21 INDUSTRIAL LANDFILL GROUNDWATER EXTRACTION SYSTEM/ CONTAINMENT BARRIER

SITE LAYOUT
AS-BUILT

SCALE: 1" = 80'
SPEC No.
SHEET G-4 4 OF 19
FILE No. 767497-E15

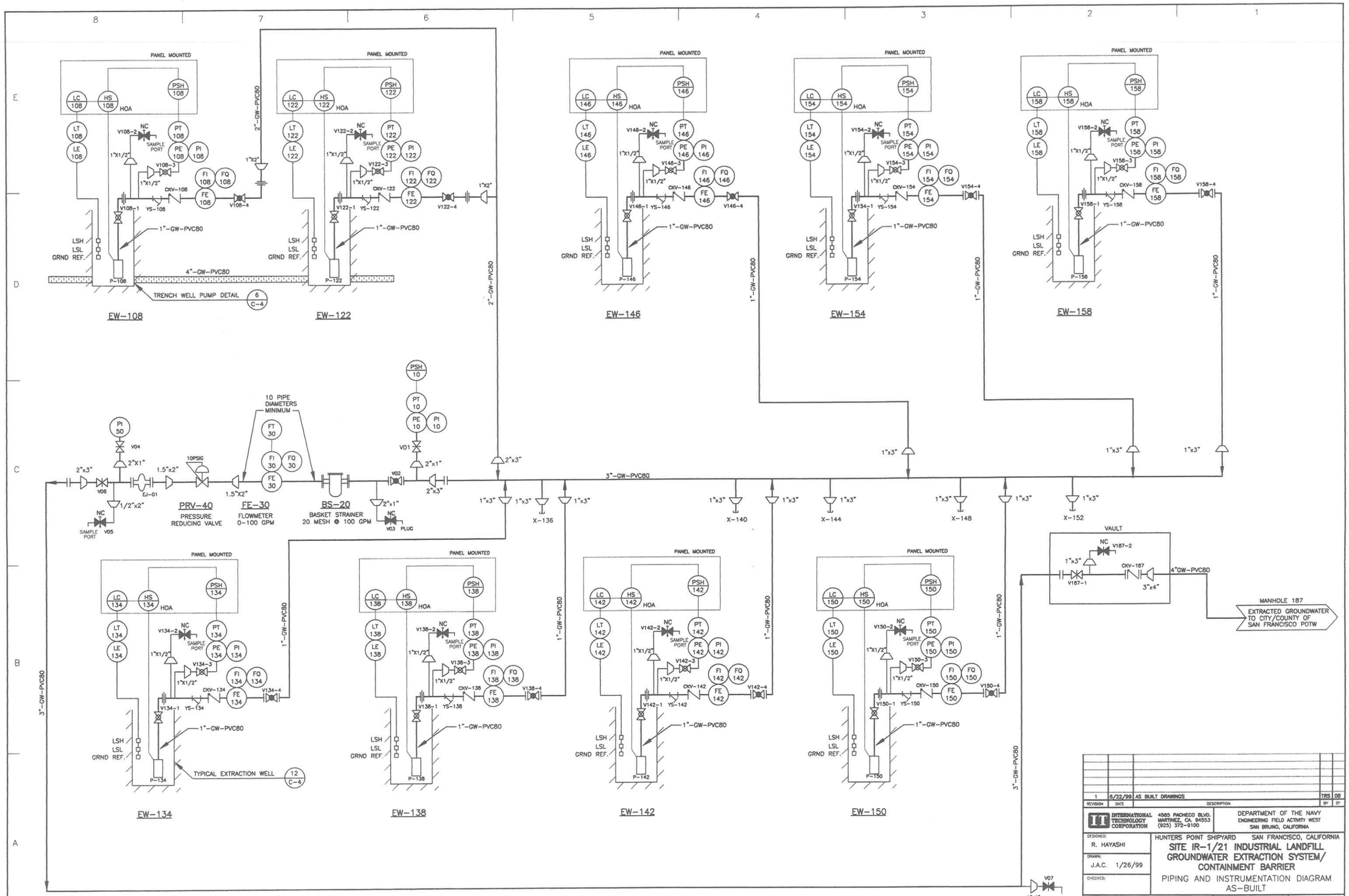

REVISION	DATE	DESCRIPTION	BY	BY
1	6/22/99	AS BUILT DRAWINGS	TRS	DB

INTERNATIONAL TECHNOLOGY CORPORATION
4585 PACHECO BLVD.
MARTINEZ, CA. 94553
(925) 372-9100

DEPARTMENT OF THE NAVY
ENGINEERING FIELD ACTIVITY WEST
SAN BRUNO, CALIFORNIA

DESIGNED: R. HAYASHI
DRAWN: J.A.C. 1/26/99
CHECKED:
SUBMITTED:
DATE APPROVED:

HUNTERS POINT SHIPYARD SAN FRANCISCO, CALIFORNIA

SITE IR-1/21 INDUSTRIAL LANDFILL GROUNDWATER EXTRACTION SYSTEM/ CONTAINMENT BARRIER

PIPING AND INSTRUMENTATION DIAGRAM
AS-BUILT

SCALE: NOT TO SCALE
SPEC No.
SHEET C-1 5 OF 19
FILE No. 767497-E34

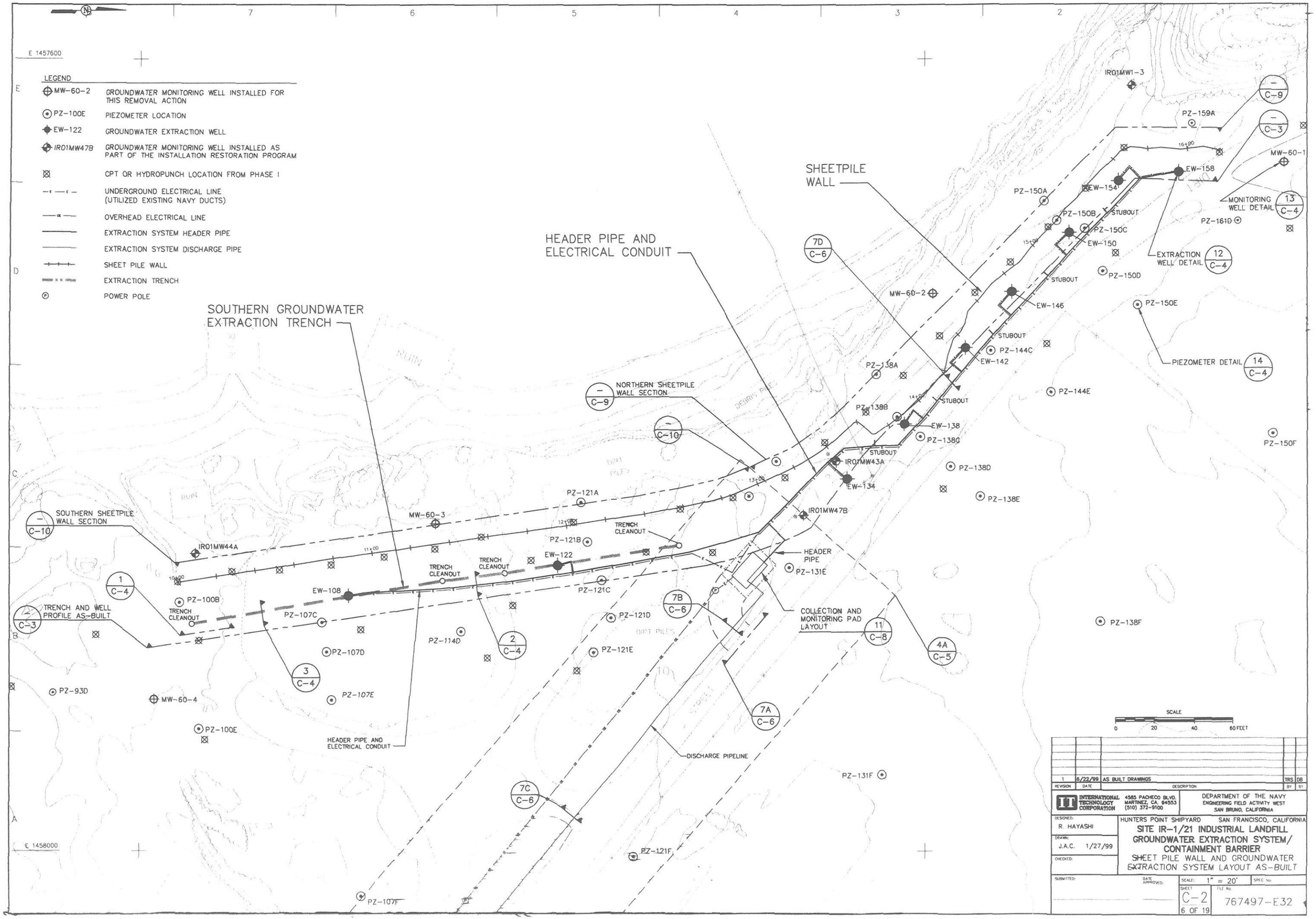
E 1457600
LEGEND
MW-60-2 GROUNDWATER MONITORING WELL INSTALLED FOR THIS REMOVAL ACTION
PZ-100E PIEZOMETER LOCATION
EW-122 GROUNDWATER EXTRACTION WELL
IR01MW47B GROUNDWATER MONITORING WELL INSTALLED AS PART OF THE INSTALLATION RESTORATION PROGRAM
CPT OR HYDROPUNCH LOCATION FROM PHASE I
UNDERGROUND ELECTRICAL LINE (UTILIZED EXISTING NAVY DUCTS)
OVERHEAD ELECTRICAL LINE
EXTRACTION SYSTEM HEADER PIPE
EXTRACTION SYSTEM DISCHARGE PIPE
SHEET PILE WALL
EXTRACTION TRENCH
POWER POLE
SOUTHERN GROUNDWATER EXTRACTION TRENCH
HEADER PIPE AND ELECTRICAL CONDUIT
SHEETPILE WALL
NORTHERN SHEETPILE WALL SECTION
SOUTHERN SHEETPILE WALL SECTION
TRENCH AND WELL PROFILE AS-BUILT
MONITORING WELL DETAIL
EXTRACTION WELL DETAIL
PIEZOMETER DETAIL
HEADER PIPE
COLLECTION AND MONITORING PAD LAYOUT
DISCHARGE PIPELINE
TRENCH CLEANOUT
STUBOUT
DEBRIS PILE
DIRT PILES
RUN
IR01MW1-3
PZ-159A
MW-60-1
EW-158
EW-154
PZ-150A
PZ-150B
PZ-150C
EW-150
PZ-150D
PZ-150E
PZ-150F
PZ-161D
MW-60-2
EW-146
PZ-144C
EW-142
PZ-138A
PZ-138B
EW-138
PZ-138C
PZ-144E
IR01MW43A
EW-134
PZ-138D
PZ-138E
PZ-138F
IR01MW47B
PZ-131E
PZ-131F
PZ-121A
PZ-121B
PZ-121C
PZ-121D
PZ-121E
PZ-121F
MW-60-3
EW-122
EW-108
IR01MW44A
PZ-100B
PZ-107C
PZ-107D
PZ-107E
PZ-107F
PZ-114D
PZ-93D
MW-60-4
PZ-100E
E 1458000
SCALE
0 20 40 60 FEET
1 6/22/99 AS BUILT DRAWINGS TRS DB
REVISION DATE DESCRIPTION BY BY
INTERNATIONAL TECHNOLOGY CORPORATION
4585 PACHECO BLVD. MARTINEZ, CA. 94553 (510) 372-9100
DEPARTMENT OF THE NAVY
ENGINEERING FIELD ACTIVITY WEST
SAN BRUNO, CALIFORNIA
DESIGNED: R. HAYASHI
DRAWN: J.A.C. 1/27/99
CHECKED:
SUBMITTED:
DATE APPROVED:
HUNTERS POINT SHIPYARD SAN FRANCISCO, CALIFORNIA
SITE IR-1/21 INDUSTRIAL LANDFILL
GROUNDWATER EXTRACTION SYSTEM/
CONTAINMENT BARRIER
SHEET PILE WALL AND GROUNDWATER
EXTRACTION SYSTEM LAYOUT AS-BUILT
SCALE: 1" = 20'
SPEC No.
SHEET C-2 6 OF 19
FILE No. 767497-E32

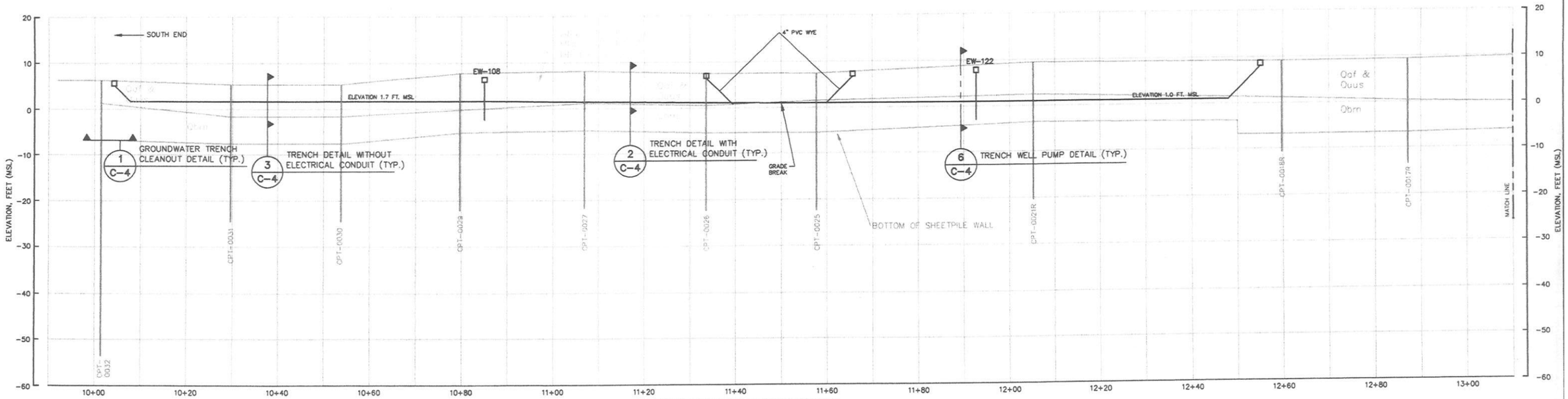

SOUTHERN EXTRACTION TRENCH PROFILE

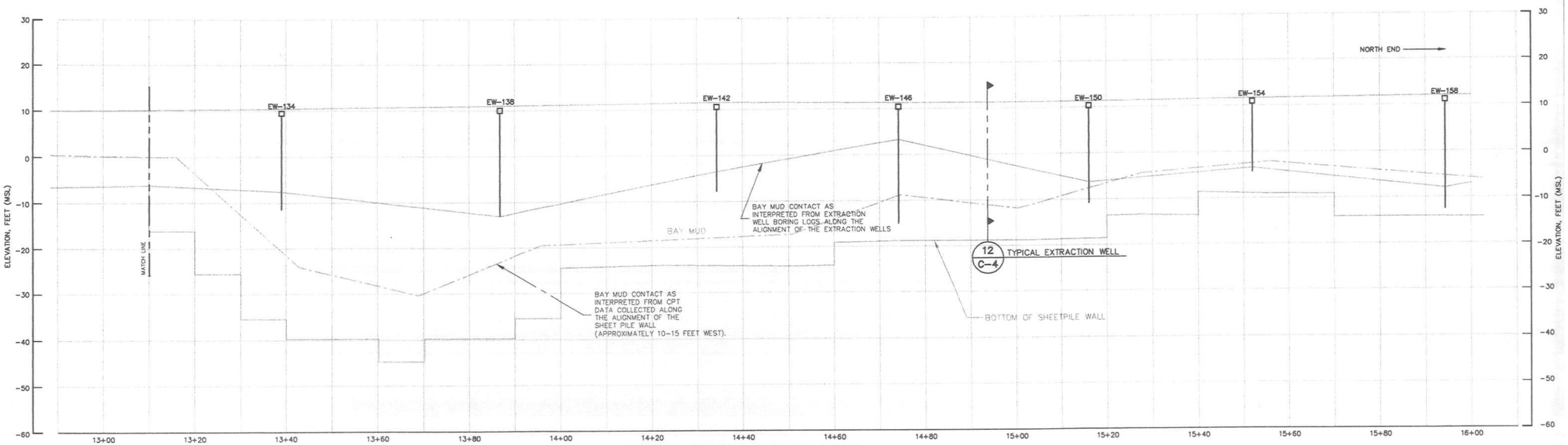

NORTHERN EXTRACTION SYSTEM WELL PROFILE

HORIZONTAL AND VERTICAL SCALE
0 10 20 FEET

NOTE:
THE SHADOWED CROSS SECTION IN THE TRENCH PROFILE REPRESENTS SUBSURFACE STRATIGRAPHY 20 FEET WEST OF THE SOUTHERN TRENCH LOCATION AS PROVIDED BY CPT DATA.
THE SHADOWED CROSS SECTION IN THE WELL PROFILE REPRESENTS SUBSURFACE STRATIGRAPHY ALONG THE EXTRACTION WELL ALIGNMENT AS PROVIDED BY THE WELL BORING LOGS.

REVISION	DATE	DESCRIPTION	BY	BY
1	5/5/99	AS BUILT DRAWINGS	TRS	DB

INTERNATIONAL TECHNOLOGY CORPORATION
4585 PACHECO BLVD.
MARTINEZ, CA. 94553
(925) 372-9100

DEPARTMENT OF THE NAVY
ENGINEERING FIELD ACTIVITY WEST
SAN BRUNO, CALIFORNIA

DESIGNED: R. HAYASHI
DRAWN: J.A.C. 1/27/99
CHECKED:
SUBMITTED:
DATE APPROVED:

HUNTERS POINT SHIPYARD SAN FRANCISCO, CALIFORNIA

SITE IR-1/21 INDUSTRIAL LANDFILL GROUNDWATER EXTRACTION SYSTEM/ CONTAINMENT BARRIER

TRENCH AND WELL PROFILE
AS-BUILT

SCALE: AS SHOWN
SPEC No.
SHEET C-3 7 OF 19
FILE No. 767497-E21

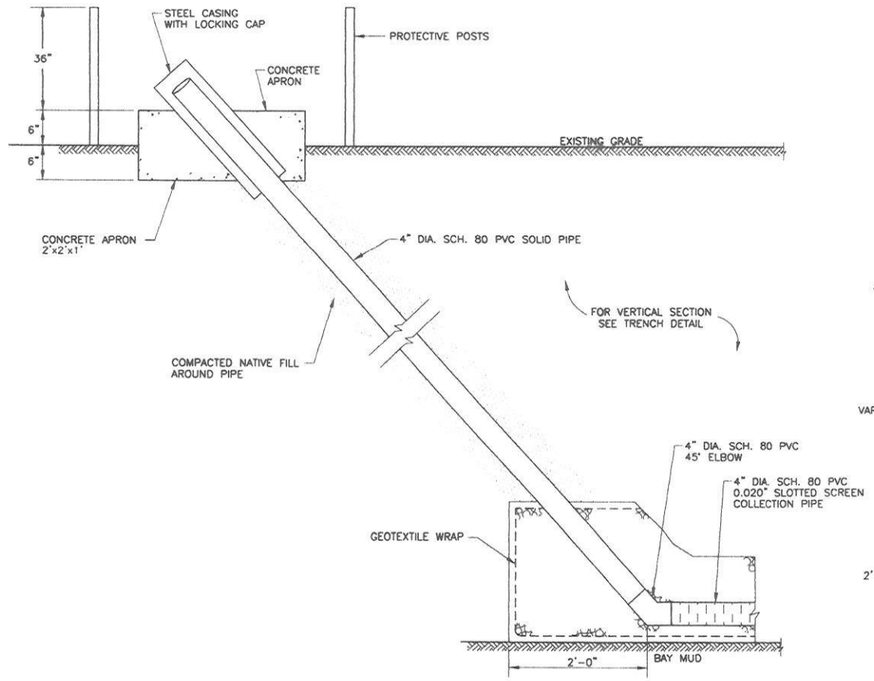

GROUNDWATER TRENCH CLEANOUT DETAIL (1 / C-4) C-2,C-3
NOT TO SCALE

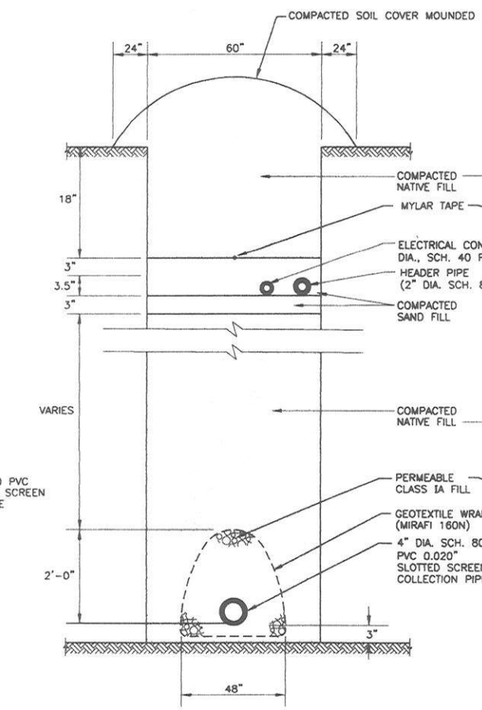

TRENCH DETAIL WITH ELECTRICAL CONDUIT (2 / C-4) C-2, C-3
NOT TO SCALE

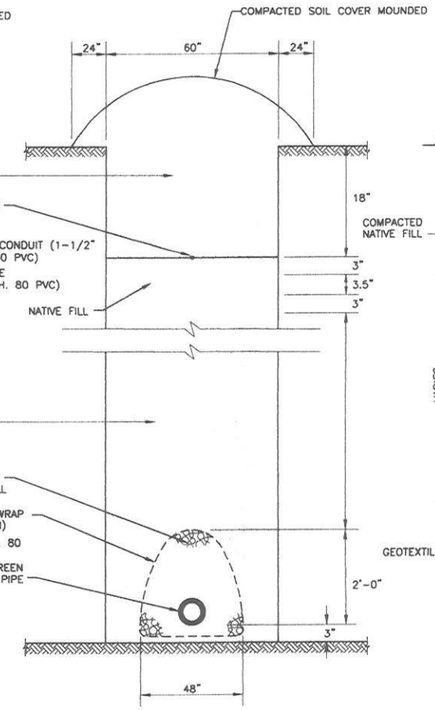

TRENCH DETAIL WITHOUT ELECTRICAL CONDUIT (3 / C-4) C-2, C-3
NOT TO SCALE

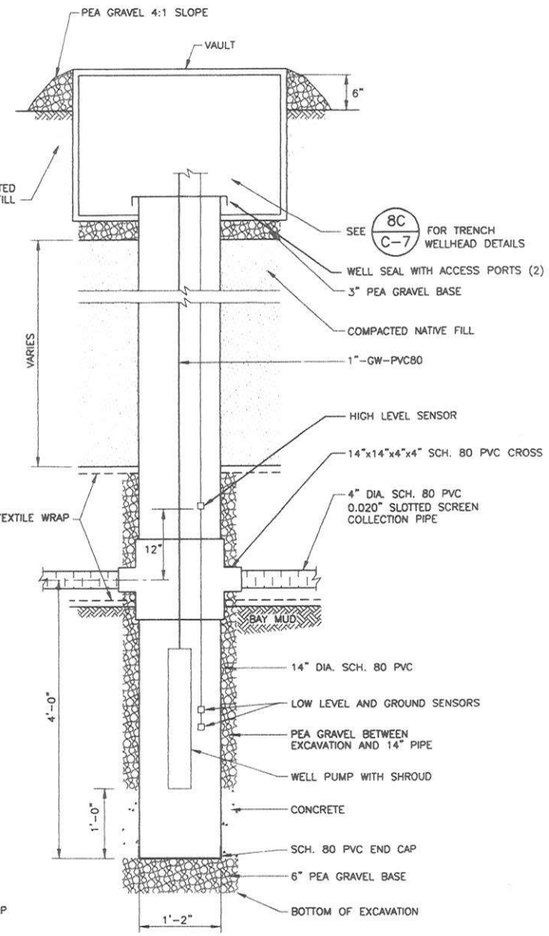

TRENCH WELL PUMP DETAIL (6 / C-4) C-1, C-3
NOT TO SCALE

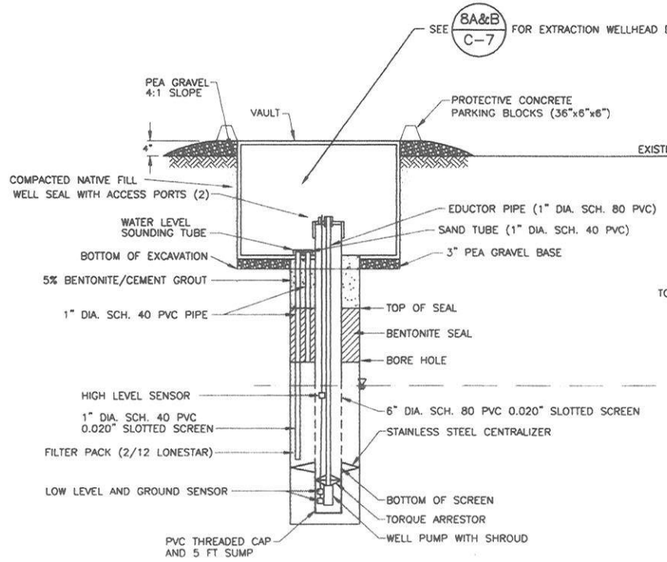

TYPICAL EXTRACTION WELL (12 / C-4) C-1, C-2, C-3, C-7
NOT TO SCALE

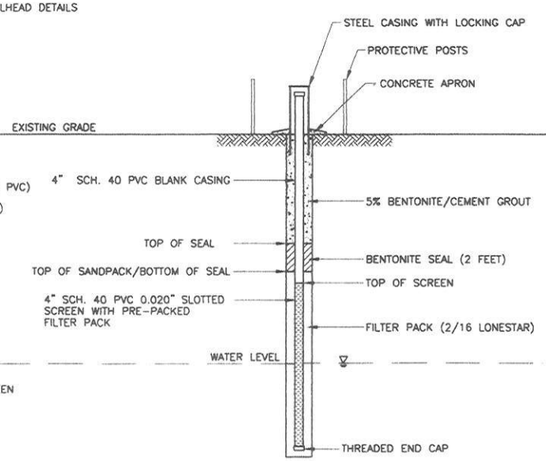

TYPICAL MONITORING WELL (13 / C-4) C-2
NOT TO SCALE

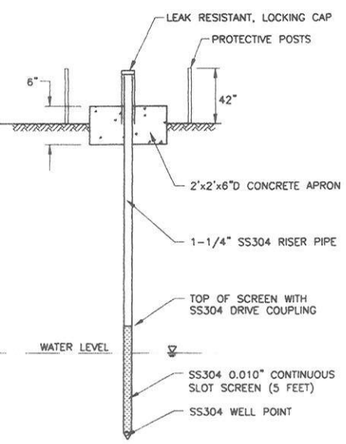

TYPICAL PIEZOMETER (14 / C-4) C-2
NOT TO SCALE

REVISION	DATE	DESCRIPTION	BY	BY
1	6/22/99	AS BUILT DRAWINGS	TRS	DB

INTERNATIONAL TECHNOLOGY CORPORATION
4585 PACHECO BLVD.
MARTINEZ, CA. 94553
(925) 372-9100

DEPARTMENT OF THE NAVY
ENGINEERING FIELD ACTIVITY WEST
SAN BRUNO, CALIFORNIA

DESIGNED: R. HAYASHI
DRAWN: J.A.C. 1/26/99
CHECKED:
SUBMITTED:
DATE APPROVED:

HUNTERS POINT SHIPYARD SAN FRANCISCO, CALIFORNIA

SITE IR-1/21 INDUSTRIAL LANDFILL GROUNDWATER EXTRACTION SYSTEM/ CONTAINMENT BARRIER

TRENCH AND WELL DETAILS
AS-BUILT

SCALE: AS SHOWN
SPEC No.
SHEET: C-4
8 OF 19
I.C.E. No. 767497-E33

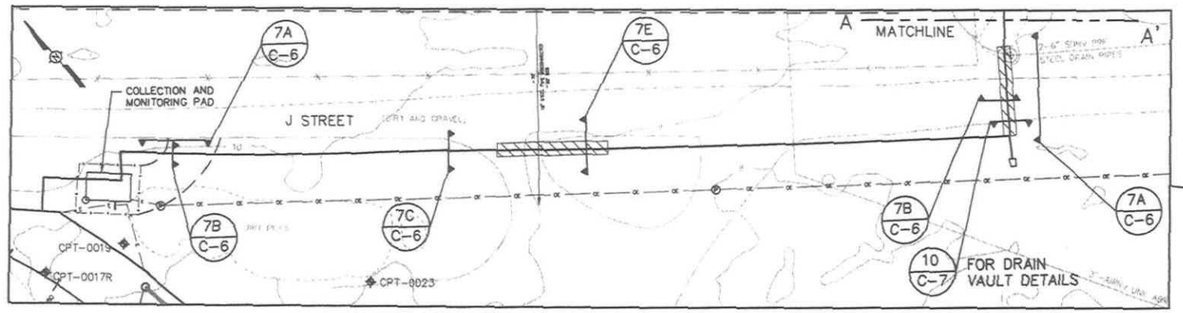

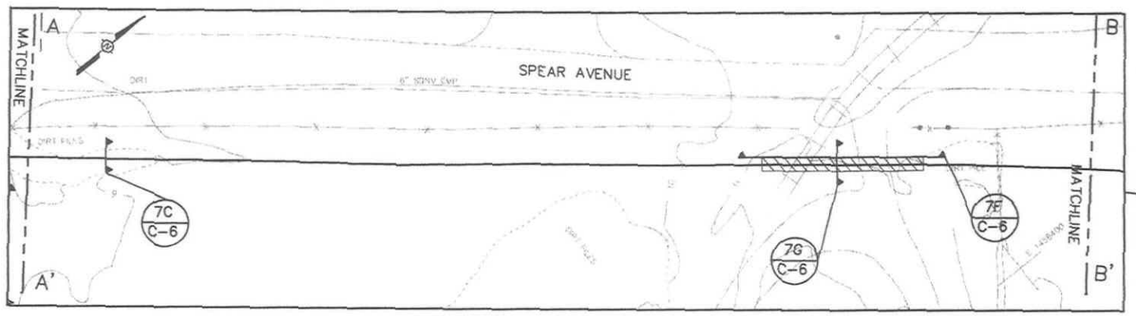

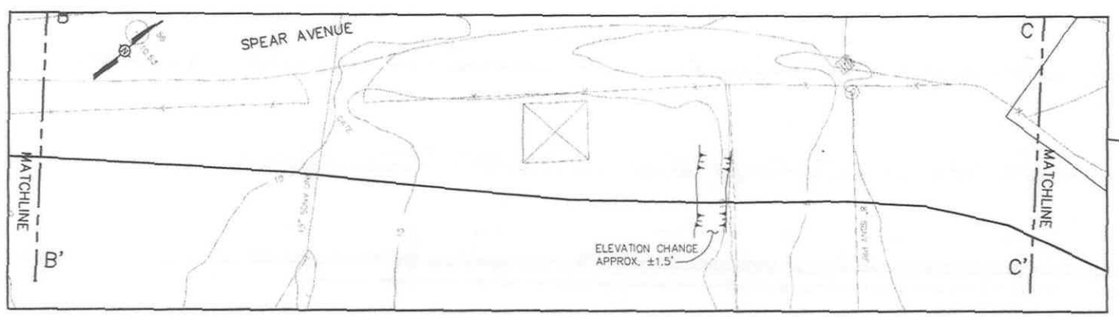

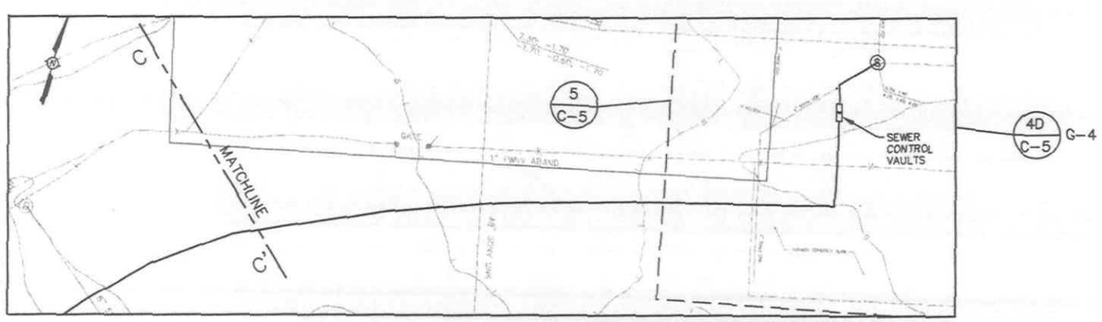

PIPELINE ROUTE (4 / C-5) G-4

SCALE: 0 25 50 75 FEET

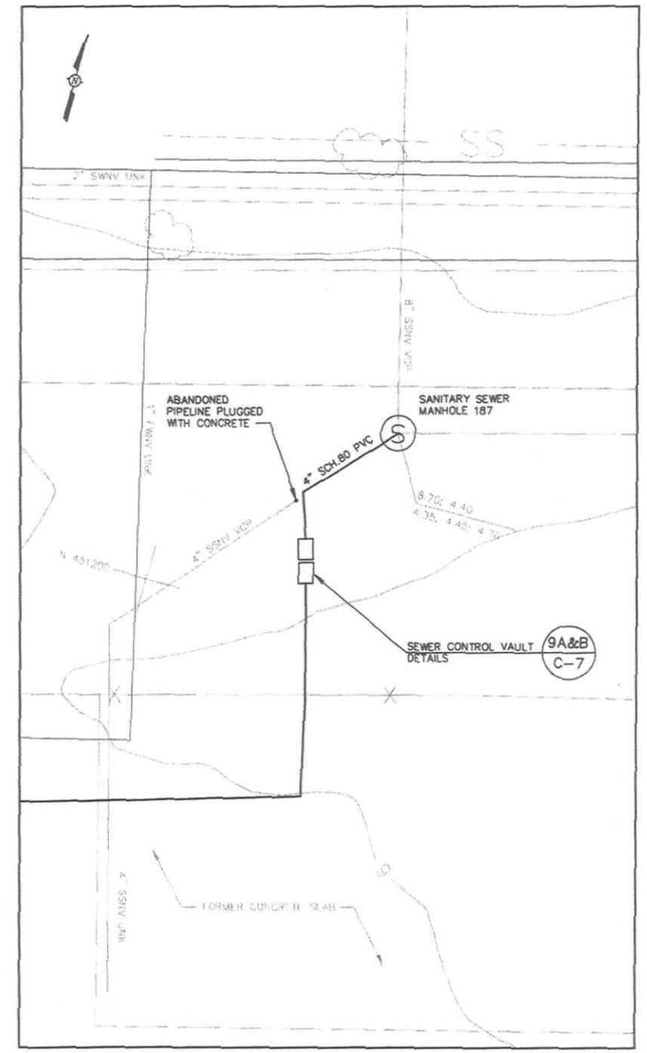

SANITARY SEWER LINE TIE-IN (5 / C-5) G-4, C-5

SCALE: 0 10 20 30 FEET

REVISION	DATE	DESCRIPTION	TRS BY	DB BY
1	5/5/99	AS BUILT DRAWINGS		

INTERNATIONAL TECHNOLOGY CORPORATION, 4585 PACHECO BLVD. MARTINEZ, CA. 94553 (925) 372-9100

DEPARTMENT OF THE NAVY
ENGINEERING FIELD ACTIVITY WEST
SAN BRUNO, CALIFORNIA

DESIGNED: R. HAYASHI
DRAWN: J.A.C. 1/26/99
CHECKED:

HUNTERS POINT SHIPYARD SAN FRANCISCO, CALIFORNIA

SITE IR-1/21 INDUSTRIAL LANDFILL GROUNDWATER EXTRACTION SYSTEM/ CONTAINMENT BARRIER

PIPELINE ROUTE
AS-BUILT

SUBMITTED: DATE APPROVED:

SCALE: AS NOTED SPEC No.

SHEET C-5 9 OF 19 FILE No. 767497-E37

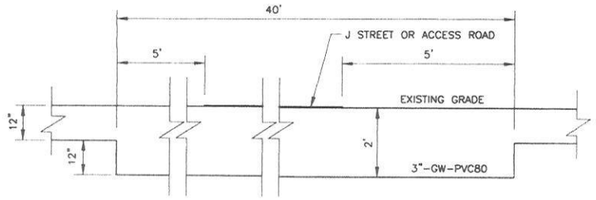

ROAD CROSSING SIDE VIEW (7A / C-6) C-2, C-5

NOT TO SCALE

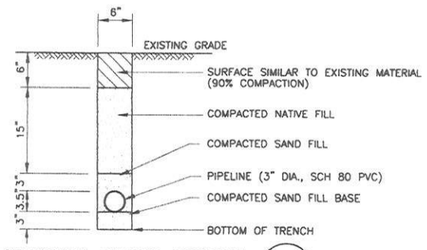

ROAD CROSSING CROSS SECTION (7B / C-6) C-2, C-5

NOT TO SCALE

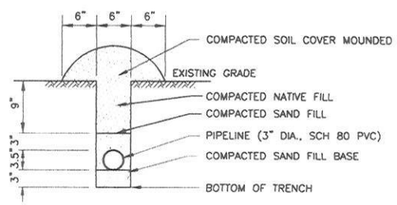

PIPELINE CROSS SECTION (7C / C-6) C-2, C-5

NOT TO SCALE

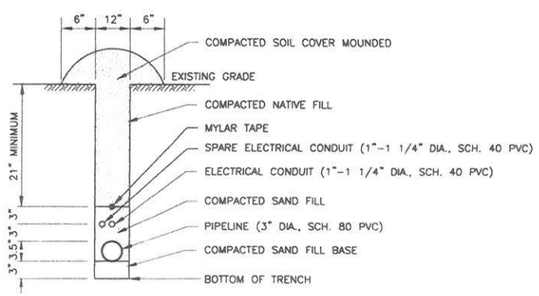

HEADER PIPE CROSS SECTION (7D / C-6) C-2

NOT TO SCALE

PIPELINE DETAILS (7 / C-6) C-2

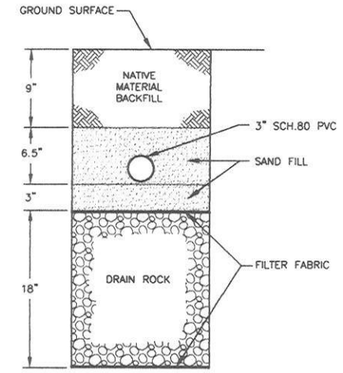

PIPELINE CROSS SECTION (7E / C-6) C-5

NOT TO SCALE

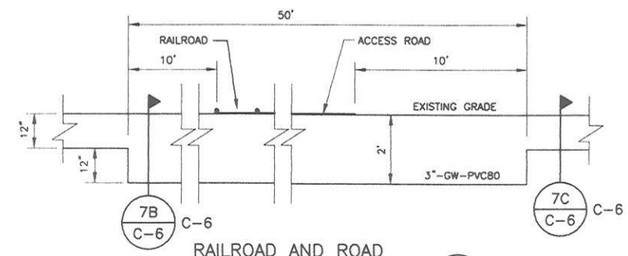

RAILROAD AND ROAD CROSSING SIDE VIEW (7F / C-6) C-5

NOT TO SCALE

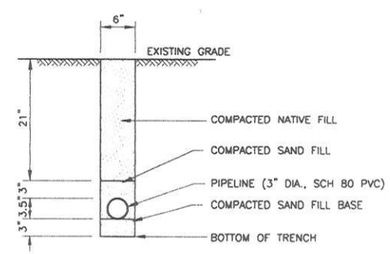

RAILROAD AND ROAD CROSSING CROSS SECTION (7G / C-6) C-5

NOT TO SCALE

REVISION	DATE	DESCRIPTION	BY	BY
1	5/5/99	AS BUILT DRAWINGS	TRS	DB

INTERNATIONAL TECHNOLOGY CORPORATION
4585 PACHECO BLVD.
MARTINEZ, CA. 94553
(925) 372-9100

DEPARTMENT OF THE NAVY
ENGINEERING FIELD ACTIVITY WEST
SAN BRUNO, CALIFORNIA

DESIGNED: R. HAYASHI
DRAWN: J.A.C. 1/26/99
CHECKED:
SUBMITTED:
DATE APPROVED:

HUNTERS POINT SHIPYARD SAN FRANCISCO, CALIFORNIA

SITE IR-1/21 INDUSTRIAL LANDFILL GROUNDWATER EXTRACTION SYSTEM/ CONTAINMENT BARRIER

PIPELINE DETAILS
AS-BUILT

SCALE: AS SHOWN
SPEC No.
SHEET C-6 10 OF 19
TILT No. 767497-E35

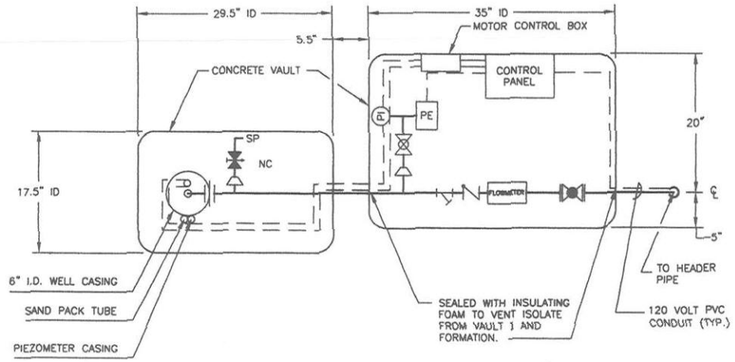

EXTRACTION WELLHEAD PLAN VIEW (TYPICAL) 8A/C-7 C-4

NOT TO SCALE

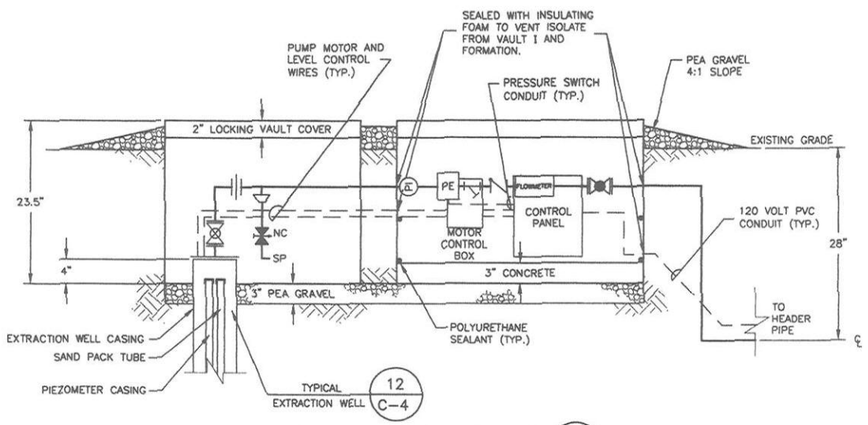

EXTRACTION WELLHEAD SIDE VIEW (TYPICAL) 8B/C-7 C-4

NOT TO SCALE

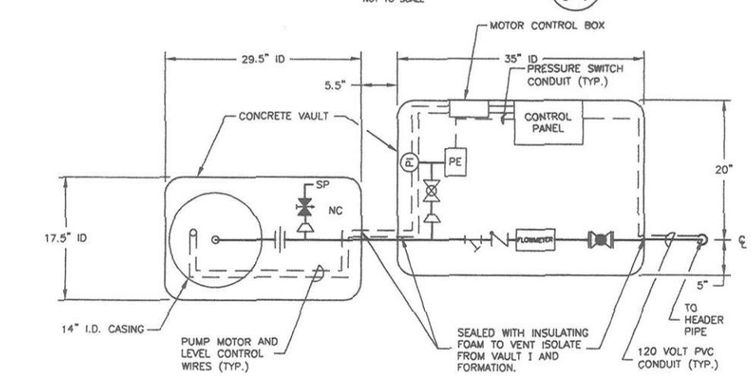

EW-122 TRENCH WELLHEAD PLAN VIEW (TYP.) 8C/C-7 C-4

NOT TO SCALE

WELLHEAD DETAILS 8/C-7 C-4

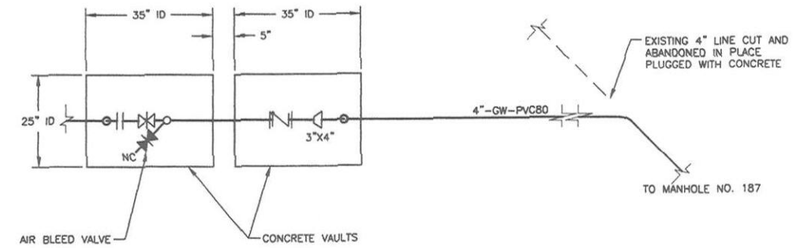

SEWER CONTROL VAULT PLAN VIEW 9A/C-7 C-5

NOT TO SCALE

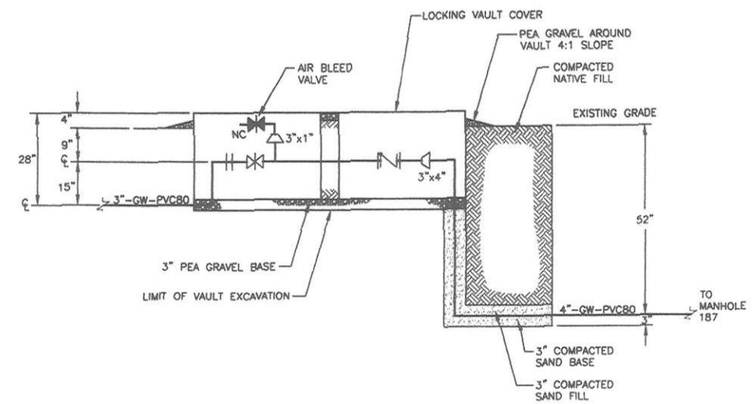

SEWER CONTROL VAULT SIDE VIEW 9B/C-7 C-5

NOT TO SCALE

SEWER CONTROL VAULT DETAILS 9/C-7 C-5

NOT TO SCALE

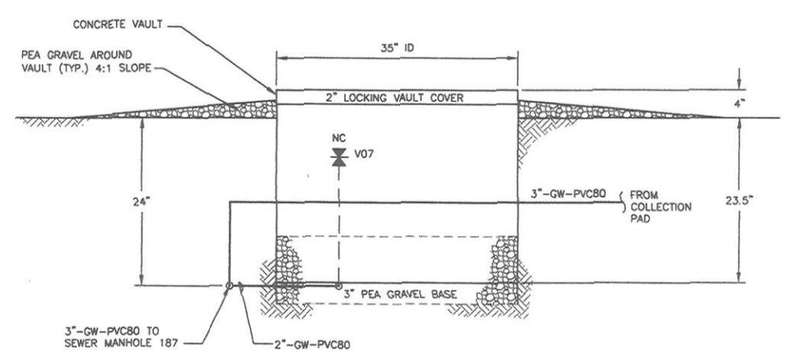

DRAIN VALVE VAULT DETAIL – SIDE VIEW 10/C-7 C-5

NOT TO SCALE

REVISION	DATE	DESCRIPTION	BY	BY
1	5/3/99	AS BUILT DRAWINGS	TRS	DB

INTERNATIONAL TECHNOLOGY CORPORATION
4585 PACHECO BLVD.
MARTINEZ, CA. 94553
(925) 372-9100

DEPARTMENT OF THE NAVY
ENGINEERING FIELD ACTIVITY WEST
SAN BRUNO, CALIFORNIA

HUNTERS POINT SHIPYARD SAN FRANCISCO, CALIFORNIA

SITE IR-1/21 INDUSTRIAL LANDFILL GROUNDWATER EXTRACTION SYSTEM/ CONTAINMENT BARRIER

VAULT PIPING DETAILS
AS-BUILT

DESIGNED: R. HAYASHI
DRAWN: J.A.C. 1/26/99
CHECKED:
SUBMITTED:
DATE APPROVED:
SCALE: AS SHOWN
SPEC No.
SHEET C-7 11 OF 19
TITLE No. 767497-E38

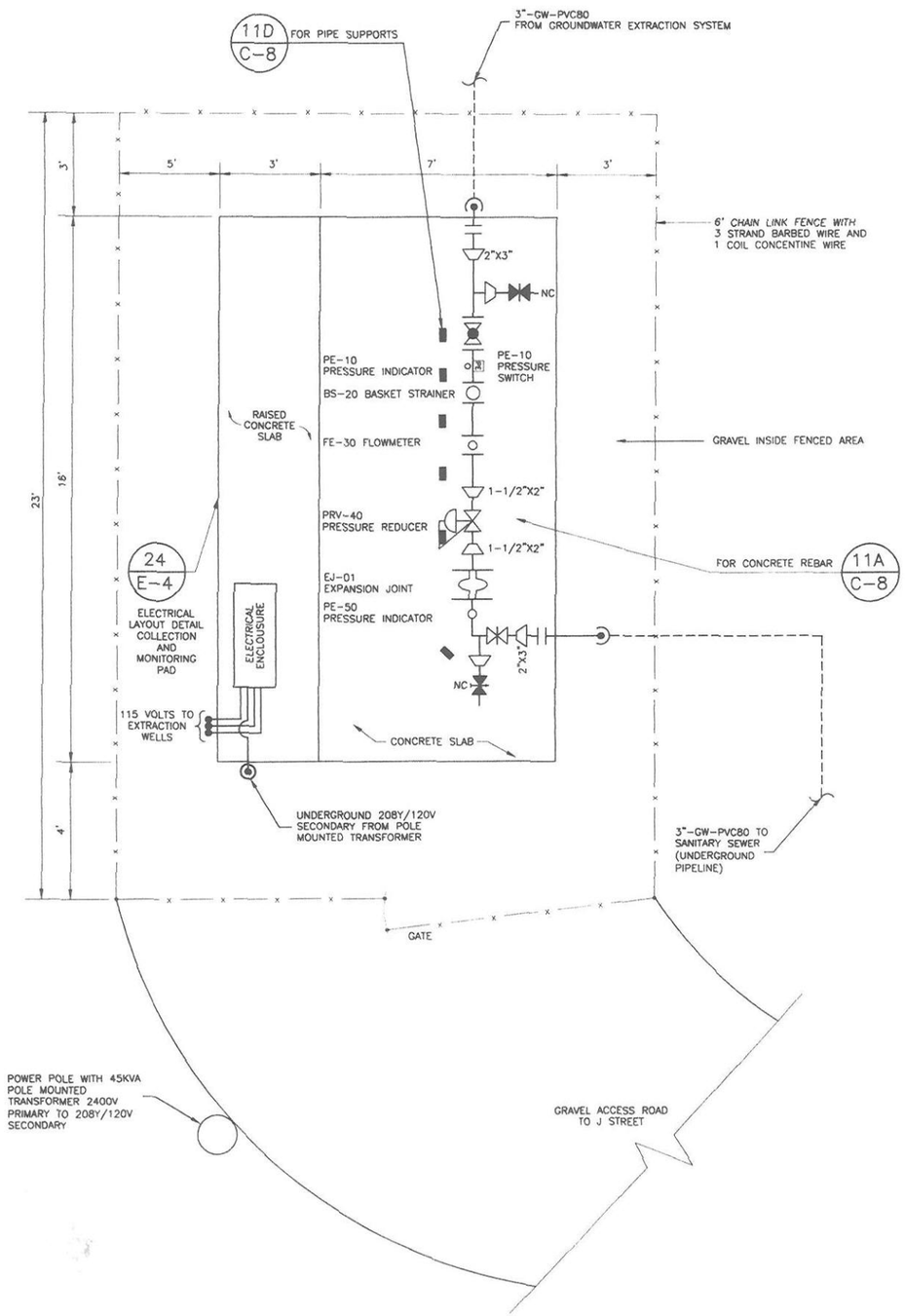

COLLECTION AND MONITORING PAD LAYOUT 11 C-8 C-2

APPROXIMATE SCALE

SCALE 0 2 4 6 FEET

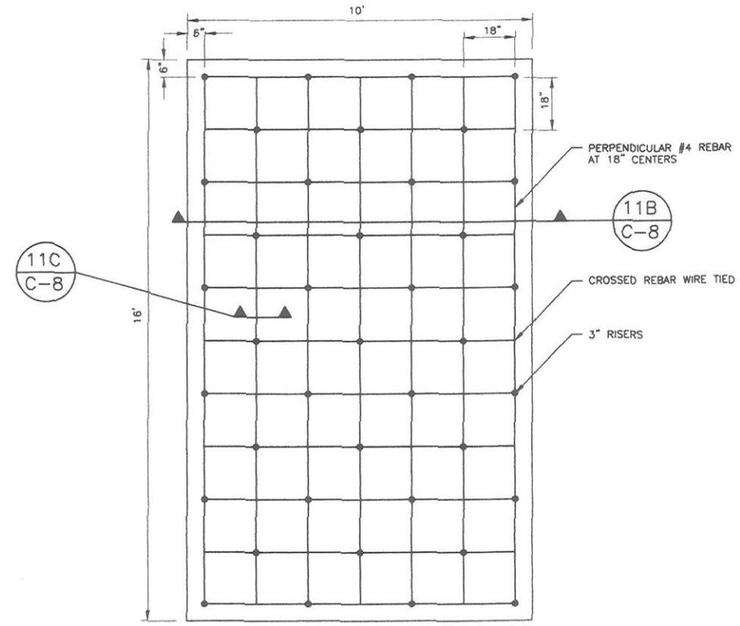

COLLECTION AND MONITORING PAD SLAB DETAILS – PLAN VIEW 11A C-8 C-8

SCALE 0 2 4 6 FEET

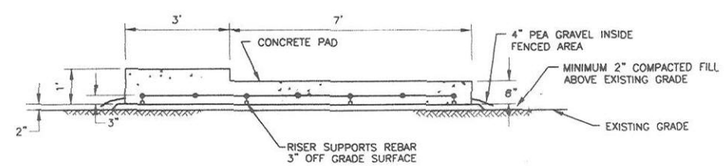

COLLECTION AND MONITORING PAD SLAB DETAILS – SIDE VIEW 11B C-8 C-8

SCALE 0 2 4 6 FEET

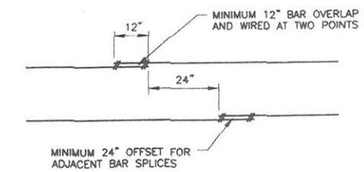

REBAR SPLICE DETAIL – COLLECTION AND MONITORING PAD 11C C-8 C-8

SCALE 0 2 4 6 FEET

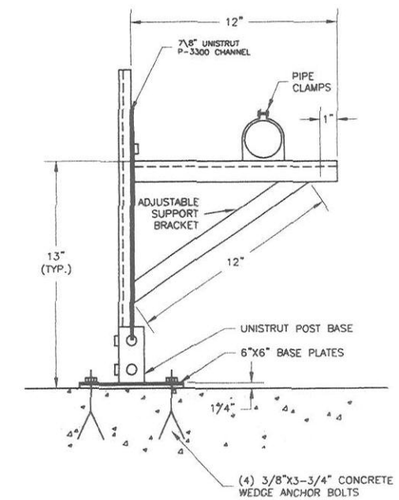

COLLECTION AND MONITORING PAD PIPE SUPPORT DETAIL 11D C-8 C-8

NOT TO SCALE

REVISION	DATE	DESCRIPTION	BY	DB
1	5/3/99	AS BUILT DRAWINGS	TRS	

INTERNATIONAL TECHNOLOGY CORPORATION, 4585 PACHECO BLVD. MARTINEZ, CA 94553 (925) 372-9100

DEPARTMENT OF THE NAVY ENGINEERING FIELD ACTIVITY WEST SAN BRUNO, CALIFORNIA

DESIGNED: R. HAYASHI

DRAWN: J.A.C. 1/26/99

CHECKED:

SUBMITTED:

DATE APPROVED:

HUNTERS POINT SHIPYARD SAN FRANCISCO, CALIFORNIA

SITE IR-1/21 INDUSTRIAL LANDFILL GROUNDWATER EXTRACTION SYSTEM/ CONTAINMENT BARRIER

COLLECTION AND MONITORING PAD AS-BUILT

SCALE: AS SHOWN

SPEC No.

SHEET C-8 12 OF 19

FILE No. 767497-E36

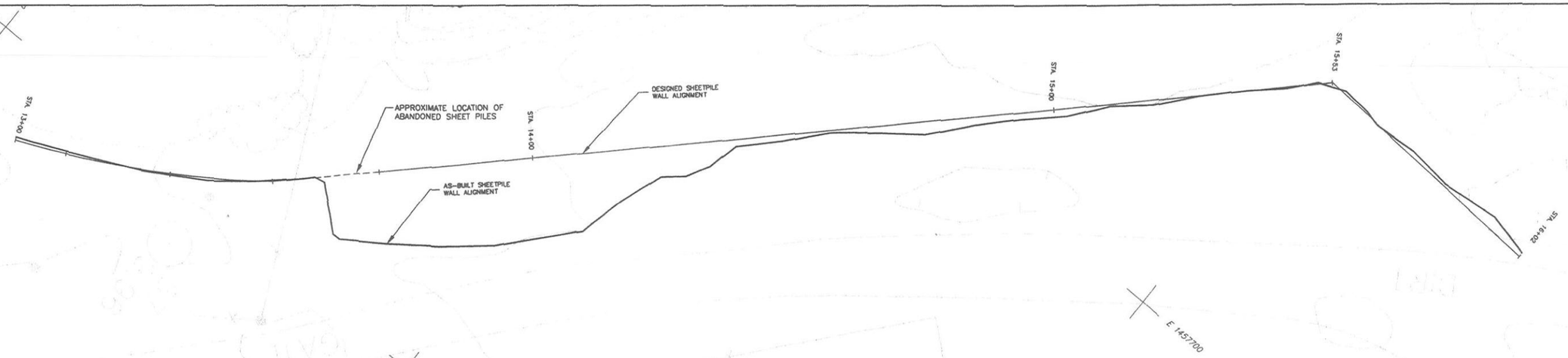

NORTHERN SHEETPILE WALL SECTION PLAN VIEW

SCALE 0 10 20 FEET

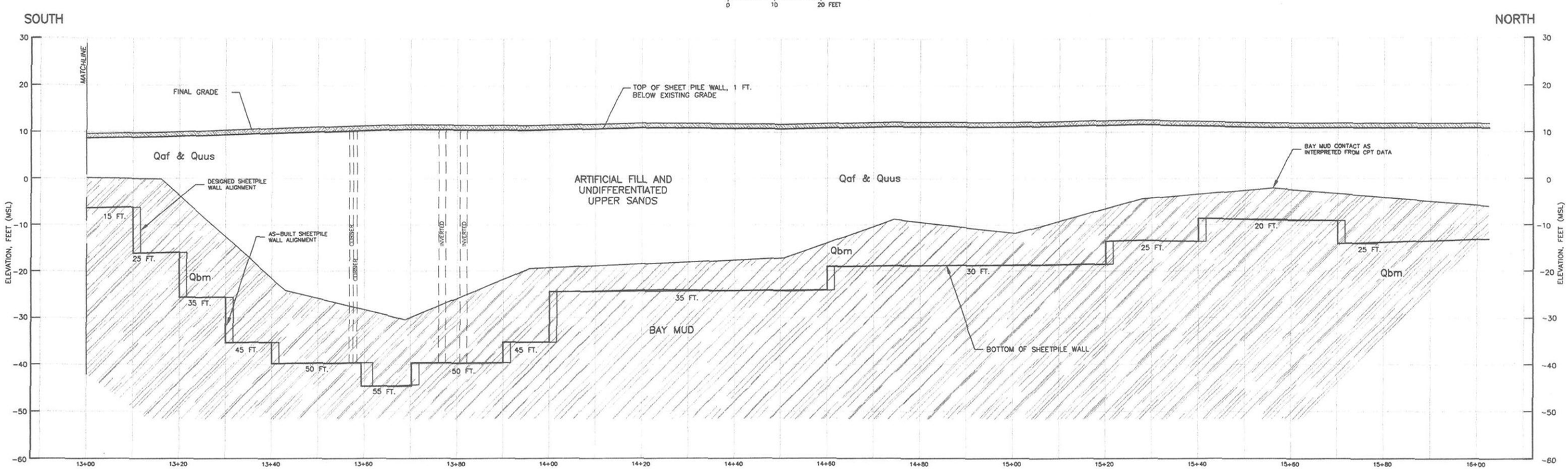

NORTHERN SHEETPILE WALL SECTION PROFILE VIEW

HORIZONTAL & VERTICAL SCALE 0 10 20 FEET

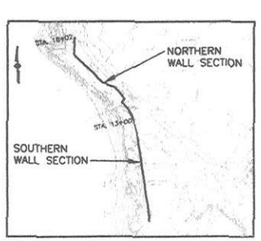

LOCATION MAP

SCALE 0 200 400 FEET

LEGEND

- ARTIFICIAL FILL AND UNDIFFERENTIATED UPPER SANDS: Qaf AND Quus
- BACKFILL (ARTIFICIAL FILL AND UNDIFFERENTIATED UPPER SANDS)
- BAY MUD: Qbm
- 12 FT. — DEPTHS OF SHEET PILE WALL AND LENGTH OF DRIVEN SHEET PILE SEGMENT
- TOP OF SHEET PILE WALL
- EXISTING GRADE
- CORNERS OR INVERTED SHEET PILES
- ABANDONED SHEET PILES

REVISION	DATE	DESCRIPTION	BY	BY
1	6/22/99	AS BUILT DRAWINGS	TRS	DB

INTERNATIONAL TECHNOLOGY CORPORATION
4585 PACHECO BLVD.
MARTINEZ, CA. 94553
(925) 372-9100

DEPARTMENT OF THE NAVY
ENGINEERING FIELD ACTIVITY WEST
SAN BRUNO, CALIFORNIA

DESIGNED: V. STIMSON
DRAWN: J.A.C. 2/3/99
CHECKED:

HUNTERS POINT SHIPYARD SAN FRANCISCO, CALIFORNIA
SITE IR-1/21 INDUSTRIAL LANDFILL
GROUNDWATER EXTRACTION SYSTEM/
CONTAINMENT BARRIER
PLAN AND PROFILE VIEWS
NORTHERN SHEETPILE WALL SECTION
AS-BUILT

SUBMITTED: DATE APPROVED: SCALE: 1" = 10' SPEC No.
SHEET C-9 13 OF 19 FILE No. 767497-E41

XREF: TOPO

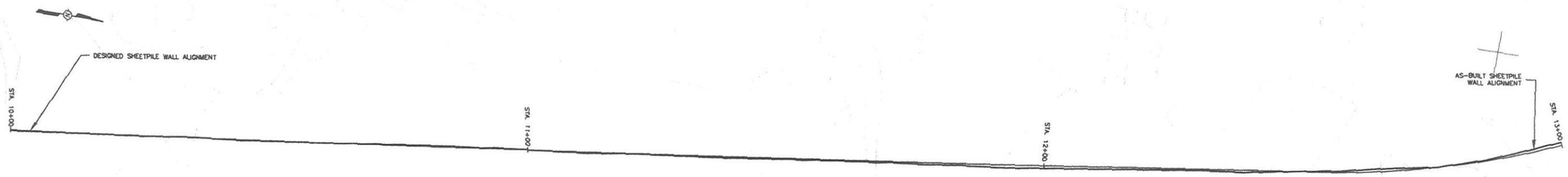

SOUTHERN SHEET PILE WALL SECTION
PLAN VIEW

SCALE
0 10 20 FEET

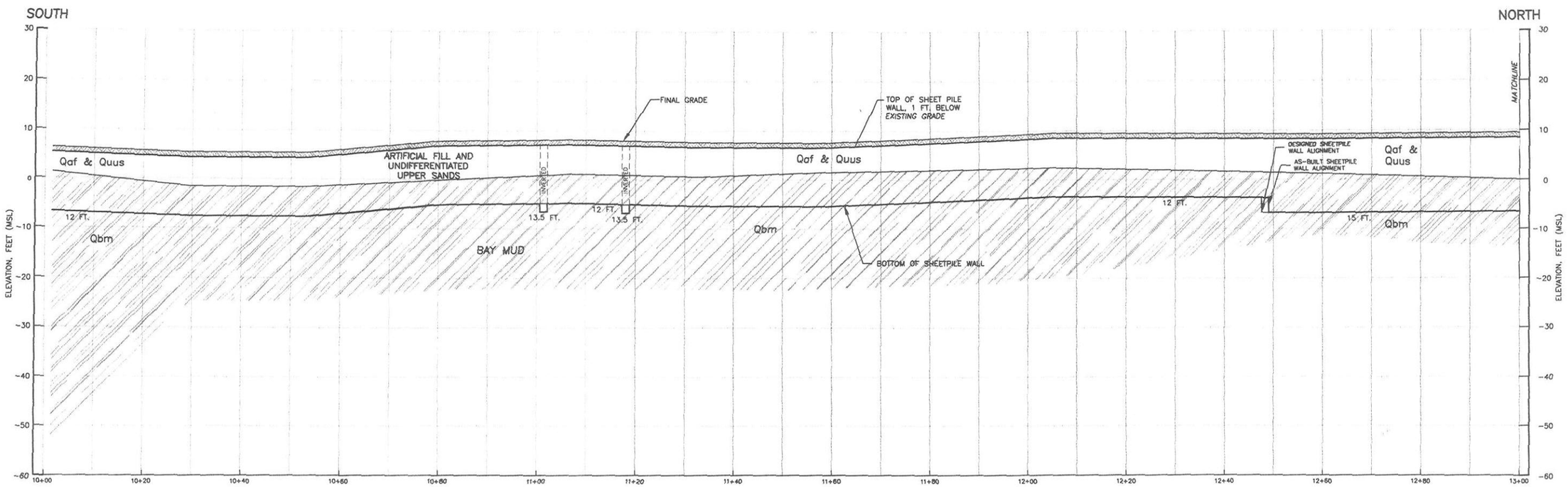

SOUTHERN SHEET PILE WALL SECTION
PROFILE VIEW

HORIZONTAL & VERTICAL SCALE
0 10 20 FEET

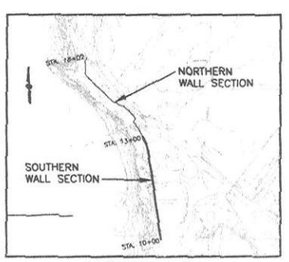

LOCATION MAP

SCALE
0 200 400 FEET

LEGEND

- ARTIFICIAL FILL AND UNDIFFERENTIATED UPPER SANDS: Qaf AND Quus
- BACKFILL (ARTIFICIAL FILL AND UNDIFFERENTIATED UPPER SANDS)
- BAY MUD: Qbm
- 12 FT. — DEPTHS OF SHEET PILE WALL AND LENGTH OF DRIVEN SHEET PILE SEGMENT
- TOP OF SHEET PILE WALL
- EXISTING GRADE
- CORNERS OR INVERTED SHEET PILES

REVISION	DATE	DESCRIPTION	BY	
1	5/6/99	AS BUILT DRAWINGS	TRS	DE

INTERNATIONAL TECHNOLOGY CORPORATION, 4585 PACHECO BLVD. MARTINEZ, CA. 94553 (925) 372-9100

DEPARTMENT OF THE NAVY
ENGINEERING FIELD ACTIVITY WEST
SAN BRUNO, CALIFORNIA

DESIGNED: V. STIMSON
DRAWN: J.A.C. 2/3/99
CHECKED:
SUBMITTED:
DATE APPROVED:

HUNTERS POINT SHIPYARD SAN FRANCISCO, CALIFORNI

SITE IR-1/21 INDUSTRIAL LANDFILL GROUNDWATER EXTRACTION SYSTEM/ CONTAINMENT BARRIER

PLAN AND PROFILE VIEWS
SOUTHERN SHEETPILE WALL SECTION
AS-BUILT

SCALE: 1" = 10'
SPEC No.
SHEET C-10 14 OF 19
FILE No. 768798-E22

HPGWCBPS(SEP98)

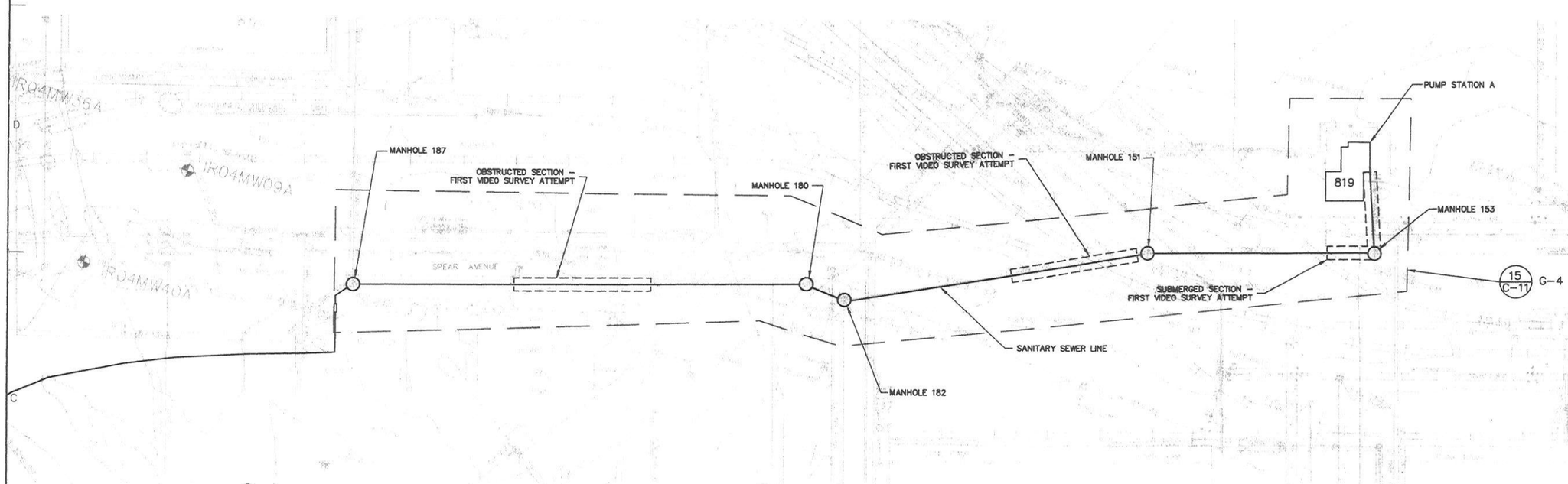

SANITARY SEWER ALIGNMENT LAYOUT (15 / C-11) G-4

SCALE

0 40 80 120 FEET

REVISION	DATE	DESCRIPTION	BY	BY
1	5/6/99	AS BUILT DRAWINGS	TRS	DB

INTERNATIONAL TECHNOLOGY CORPORATION
4585 PACHECO BLVD.
MARTINEZ, CA. 94553
(925) 372-9100

DEPARTMENT OF THE NAVY
ENGINEERING FIELD ACTIVITY WEST
SAN BRUNO, CALIFORNIA

DESIGNED: D. BADEN
DRAWN: T.R.S. 1/28/99
CHECKED:

HUNTERS POINT SHIPYARD SAN FRANCISCO, CALIFORNIA

SITE IR-1/21 INDUSTRIAL LANDFILL GROUNDWATER EXTRACTION SYSTEM/ CONTAINMENT BARRIER

ALIGNMENT OF SANITARY SEWER DISCHARGE LINE

SUBMITTED: DATE APPROVED: SCALE: AS NOTED SPEC No.

SHEET C-11 15 OF 19 FILE No. 767497-E40

XREF: HPIR121A

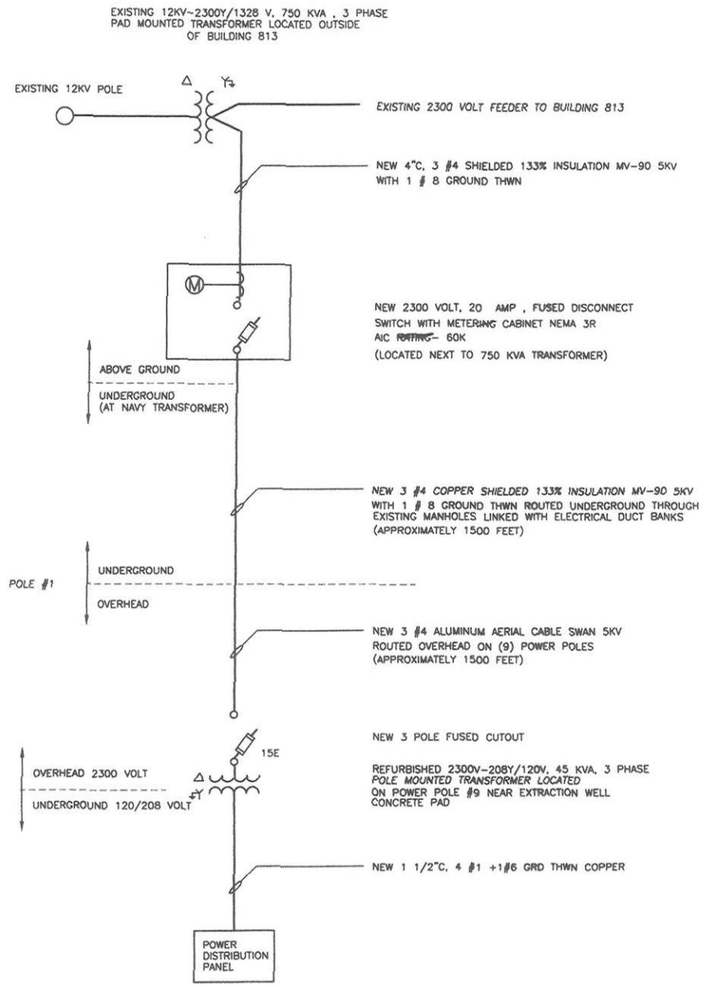

SINGLE LINE DIAGRAM (18 / E-1)

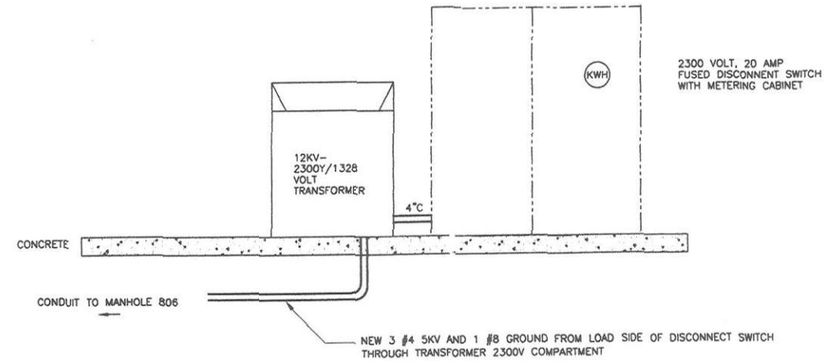

ELECTRICAL SERVICE OUTSIDE OF BUILDING 813 (19 / E-1) G-4

NOT TO SCALE

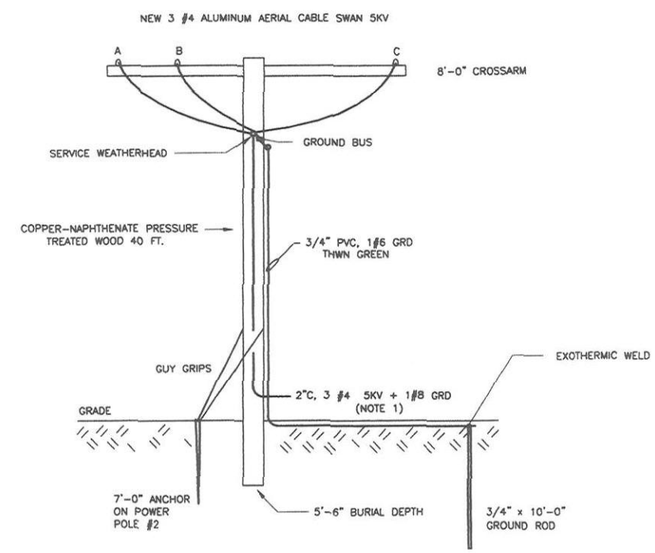

POWER POLE # 1 (20A / E-1) G-4

NOT TO SCALE

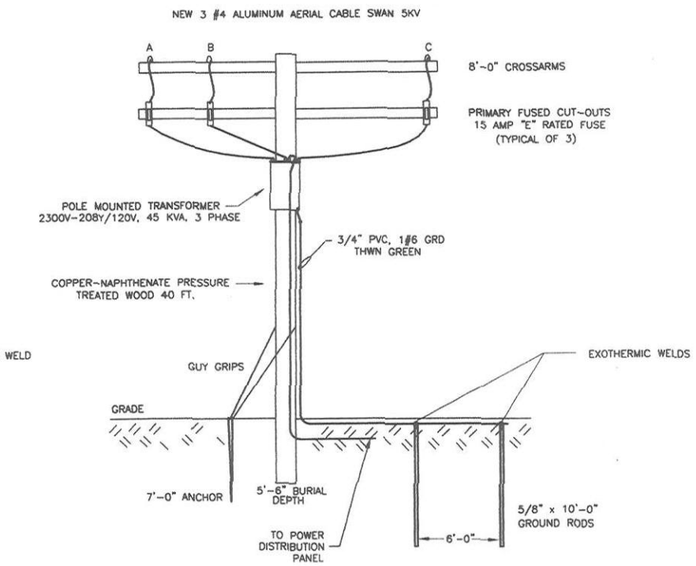

POWER POLE # 9 (20B / E-1) G-4, E-4

NOT TO SCALE

NOTES

1. ABOVEGROUND CONDUIT ON POWER POLE #1 IS 2" GALVANIZED RIGID STEEL CONNECTED TO EXISTING DUCTS.
2. ABOVEGROUND CONDUIT ON POWER POLE #9 IS 2" GALVANIZED RIGID STEEL CONNECTED TO POWER DISTRIBUTION PANEL.

TYPICAL POWER POLE DIAGRAMS (20 / E-1) G-4

NOT TO SCALE

REVISION	DATE	DESCRIPTION	BY	BY
1	6/22/99	AS BUILT DRAWINGS	TRS	DB

INTERNATIONAL TECHNOLOGY CORPORATION, 4585 PACHECO BLVD. MARTINEZ, CA. 94553 (925) 372-9100

DEPARTMENT OF THE NAVY
ENGINEERING FIELD ACTIVITY WEST
SAN BRUNO, CALIFORNIA

DESIGNED: M. JOHNSTON
DRAWN: MAJ 1/27/99
CHECKED:

HUNTERS POINT SHIPYARD SAN FRANCISCO, CALIFORNIA

SITE IR-1/21 INDUSTRIAL LANDFILL GROUNDWATER EXTRACTION SYSTEM/ CONTAINMENT BARRIER

ELECTRICAL ONE LINE DIAGRAM AND DETAILS

SUBMITTED: DATE APPROVED: SCALE: AS SHOWN SPEC No.

SHEET E-1 16 OF 19 FILE No. 767497-E43

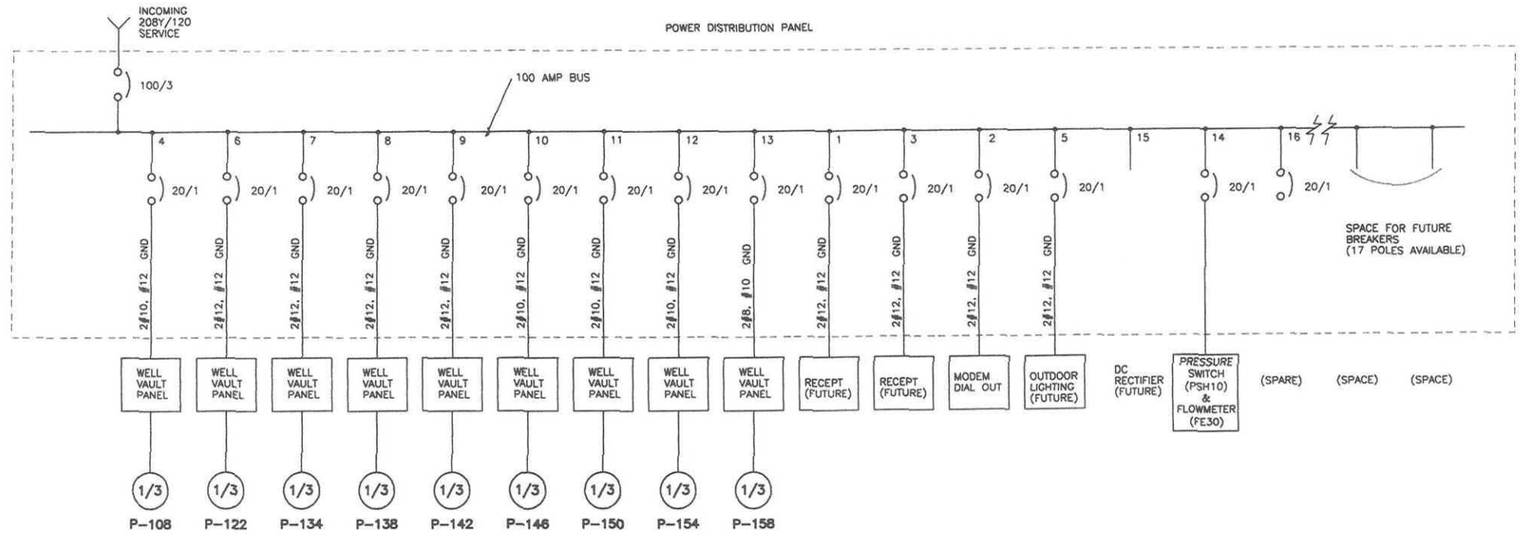

LOW VOLTAGE SINGLE LINE DIAGRAM (17/E-2) E-2

NOT TO SCALE

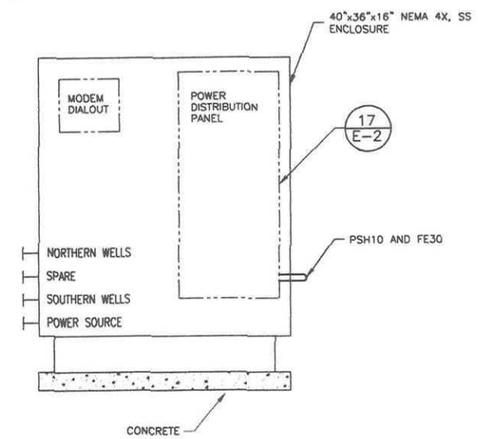

LOW VOLTAGE ELECTRICAL SERVICE ENCLOSURE (16/E-2) E-4

NOT TO SCALE

POWER DISTRIBUTION PANEL

CIRCUIT NUMBER	BREAKER TRIP	LOAD DESCRIPTION	LOAD WATTS	PHASE	LOAD WATTS	LOAD DESCRIPTION	BREAKER TRIP	CIRCUIT NUMBER
1	20	Receptacle	540	A	100	Modem/Dial out	20	2
3	20	Receptacle	540	B	850	P-108	20	4
5	20	Outdoor Lighting	1200	C	850	P-122	20	6
7	20	P-134	850	A	850	P-138	20	8
9	20	P-142	850	B	850	P-146	20	10
11	20	P-150	850	C	850	P-154	20	12
13	20	P-158	850	A	ø	SPARE	20	14
15		DC Rectifier (Future)		B	ø	SPARE	20	16
17		SPACE		C		SPACE		18
19		SPACE		A		SPACE		20
21		SPACE		B		SPACE		22
23		SPACE		C		SPACE		24

ENCLOSURE		NEMA 4X
TYPE		NQOD
VOLT/PHASE		208Y/120 3-PHASE
WIRE		4-WIRE W/GROUND
LOAD	A	3190 VA
	B	3090 VA
	C	3750 VA
	TOTAL	10030 VA

MAIN	100
MLO	–
BUS	100
MOUNTING	SURFACE
INTERRUPT	22 KAIC
	28 AMP

PANEL AND SCHEDULE

PROCESS EQUIPMENT SCHEDULE

KEY	DESCRIPTION	HP	VOLT	PHASE	AMPS	KVA
P-108	TRENCH WELL PUMP	1/3	115	1	7.2	0.85
P-122	TRENCH WELL PUMP	1/3	115	1	7.2	0.85
P-134	EXTRACTION WELL PUMP	1/3	115	1	7.2	0.85
P-138	EXTRACTION WELL PUMP	1/3	115	1	7.2	0.85
P-142	EXTRACTION WELL PUMP	1/3	115	1	7.2	0.85
P-146	EXTRACTION WELL PUMP	1/3	115	1	7.2	0.85
P-150	EXTRACTION WELL PUMP	1/3	115	1	7.2	0.85
P-154	EXTRACTION WELL PUMP	1/3	115	1	7.2	0.85
P-158	EXTRACTION WELL PUMP	1/3	115	1	7.2	0.85

REVISION	DATE	DESCRIPTION	BY	BY
1	6/22/99	AS BUILT DRAWINGS	TRS	DB

INTERNATIONAL TECHNOLOGY CORPORATION, 4585 PACHECO BLVD. MARTINEZ, CA. 94553 (925) 372-9100

DEPARTMENT OF THE NAVY
ENGINEERING FIELD ACTIVITY WEST
SAN BRUNO, CALIFORNIA

DESIGNED: R. HAYASHI
DRAWN: T.R.S. 1/27/99
CHECKED:

HUNTERS POINT SHIPYARD SAN FRANCISCO, CALIFORNIA

SITE IR-1/21 INDUSTRIAL LANDFILL GROUNDWATER EXTRACTION SYSTEM/ CONTAINMENT BARRIER

ELECTRICAL PLAN AS-BUILT

SUBMITTED: DATE APPROVED:

SCALE: AS SHOWN SPEC. No.

SHEET E-2 17 OF 19 FILE No. 767497-E25

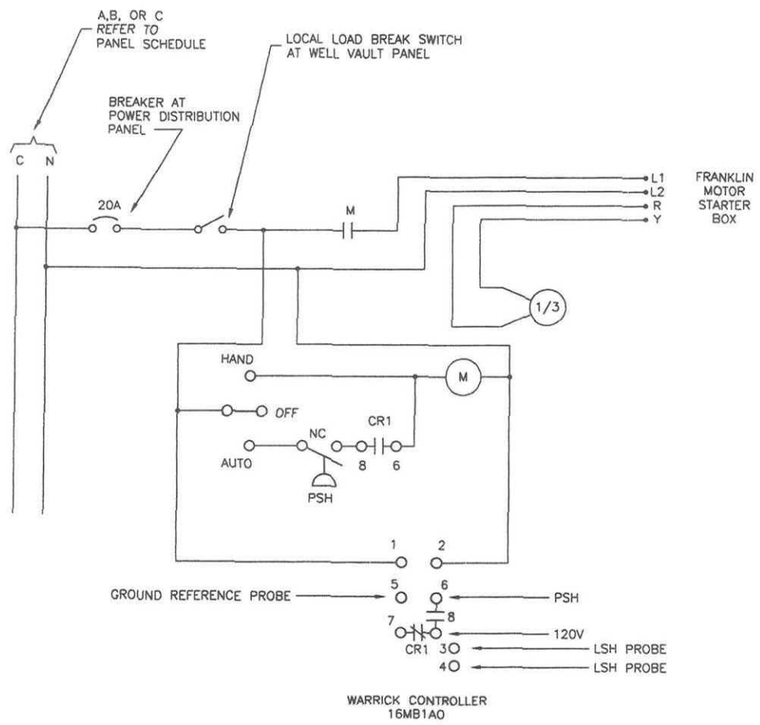

P-108, 122, 134, 138, 142,
146, 150, 154 AND 158

SINGLE PHASE WIRING DIAGRAM (21 / E-3)
(N.T.S.)

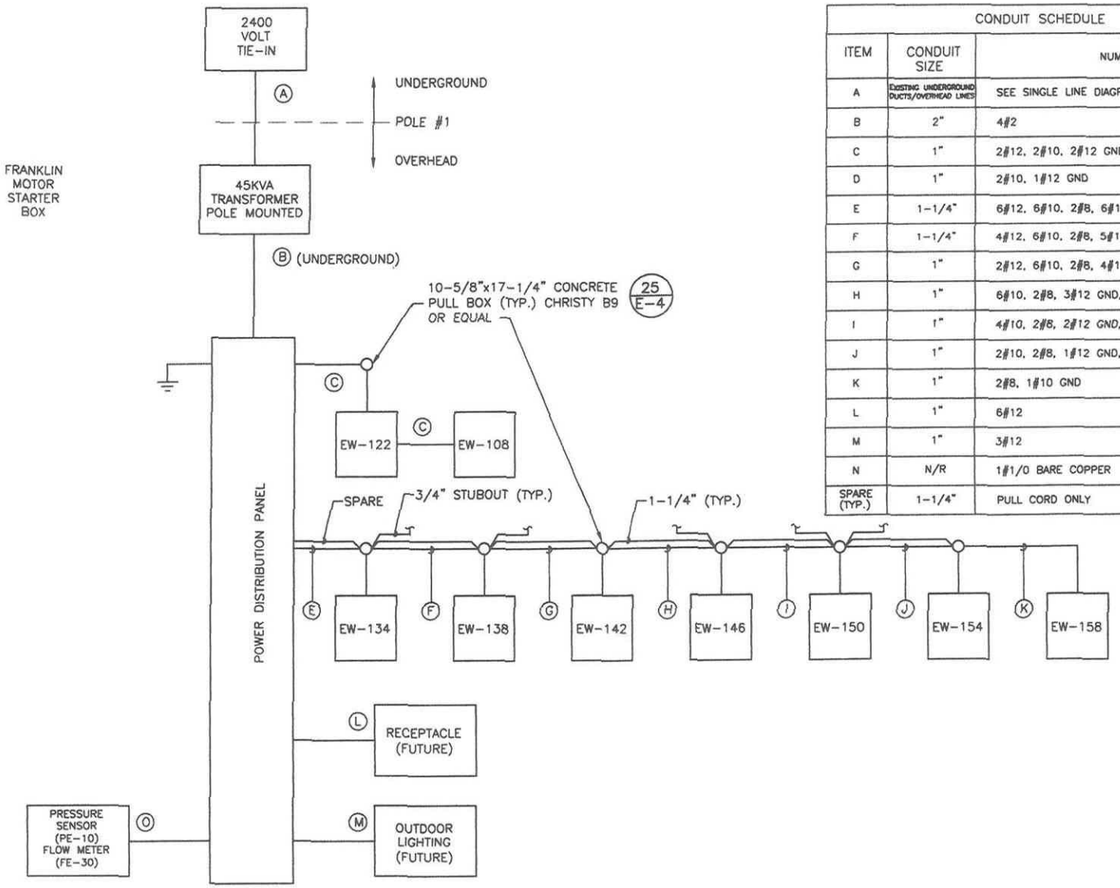

CONDUIT BLOCK DIAGRAM (22 / E-3)
(N.T.S.)

CONDUIT SCHEDULE		
ITEM	CONDUIT SIZE	NUMBER AND SIZE OF WIRE
A	EXISTING UNDERGROUND DUCTS/OVERHEAD LINES	SEE SINGLE LINE DIAGRAM SHEET E-1
B	2"	4#2
C	1"	2#12, 2#10, 2#12 GND
D	1"	2#10, 1#12 GND
E	1-1/4"	6#12, 6#10, 2#8, 6#12 GND, 1#10 GND
F	1-1/4"	4#12, 6#10, 2#8, 5#12 GND, 1#10 GND
G	1"	2#12, 6#10, 2#8, 4#12 GND, 1#10 GND
H	1"	6#10, 2#8, 3#12 GND, 1#10 GND
I	1"	4#10, 2#8, 2#12 GND, 1#10 GND
J	1"	2#10, 2#8, 1#12 GND, 1#10 GND
K	1"	2#8, 1#10 GND
L	1"	6#12
M	1"	3#12
N	N/R	1#1/0 BARE COPPER
SPARE (TYP.)	1-1/4"	PULL CORD ONLY

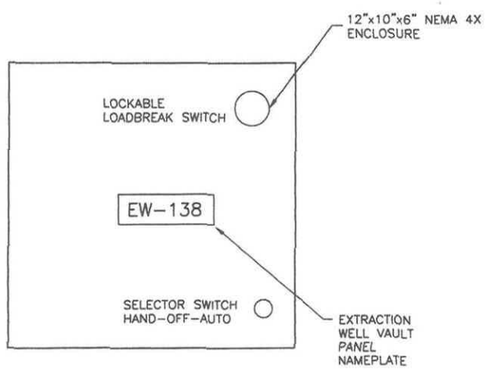

FRONT ELEVATION (23A / E-3)
(N.T.S.)

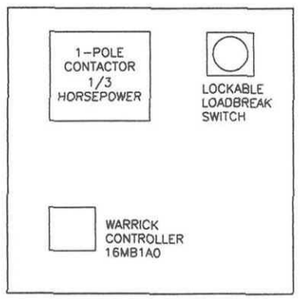

INTERIOR LAYOUT (23B / E-3)
(N.T.S.)

WELL VAULT PANEL DIAGRAM (23 / E-3)
(TYPICAL OF 9)

REVISION	DATE	DESCRIPTION	BY	BY
1	6/22/99	AS BUILT DRAWINGS	TRS	DB

INTERNATIONAL TECHNOLOGY CORPORATION
4585 PACHECO BLVD.
MARTINEZ, CA. 94553
(510) 372-9100

DEPARTMENT OF THE NAVY
ENGINEERING FIELD ACTIVITY WEST
SAN BRUNO, CALIFORNIA

DESIGNED: R. HAYASHI
DRAWN: T.R.S. 1/27/99
CHECKED:
SUBMITTED:
DATE APPROVED:

HUNTERS POINT SHIPYARD SAN FRANCISCO, CALIFORNIA

SITE IR-1/21 INDUSTRIAL LANDFILL
GROUNDWATER EXTRACTION SYSTEM/
CONTAINMENT BARRIER

MOTOR CONTROL SCHEMATIC
AND PANEL DESIGN AS-BUILT

SCALE: AS SHOWN
SPEC No.
SHEET E-3
18 OF 19
FILE No. 767497-E31

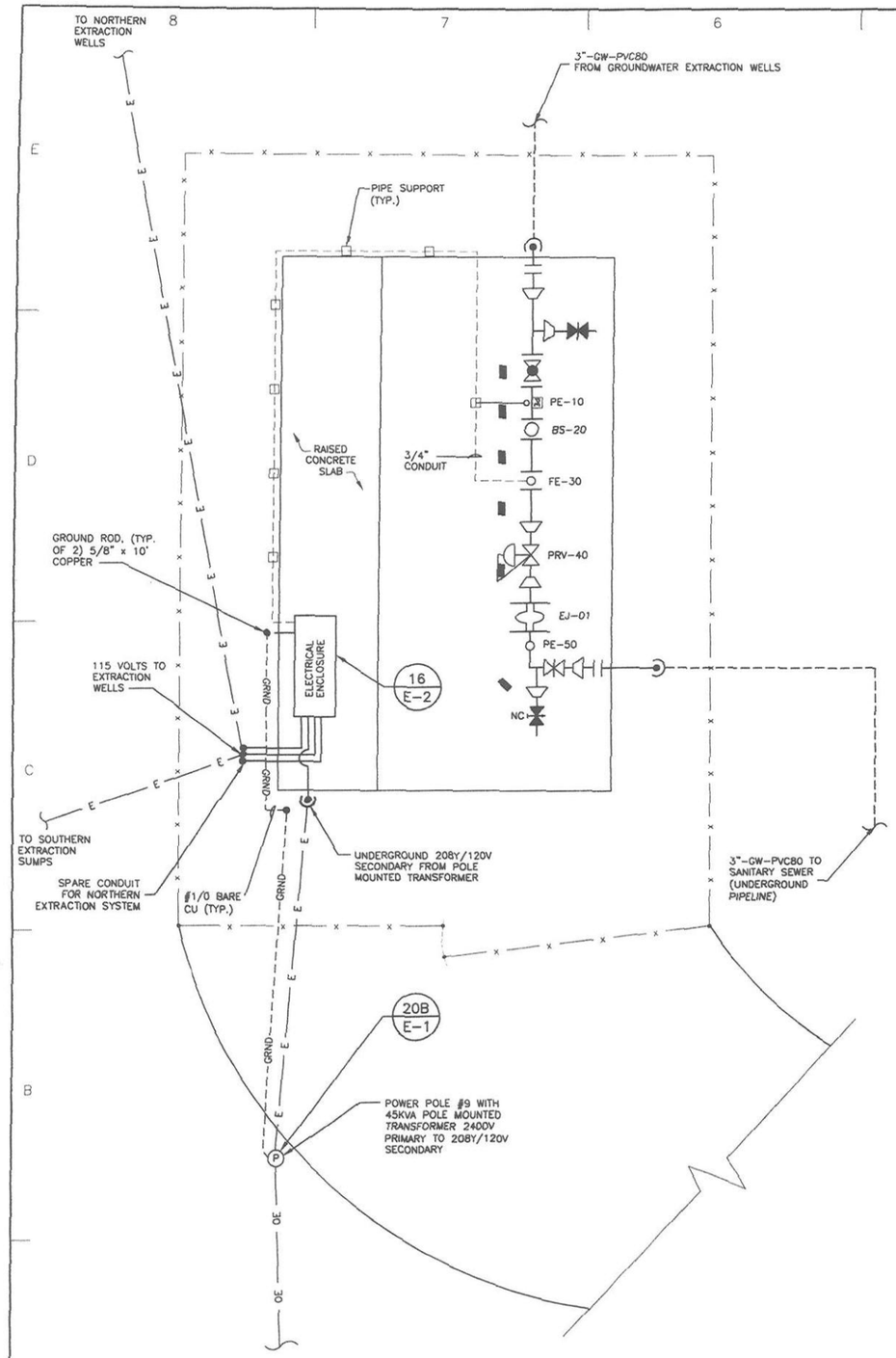

COLLECTION AND MONITORING PAD ELECTRICAL LAYOUT (24 / E-4) C-8

SCALE 0 2 4 FEET

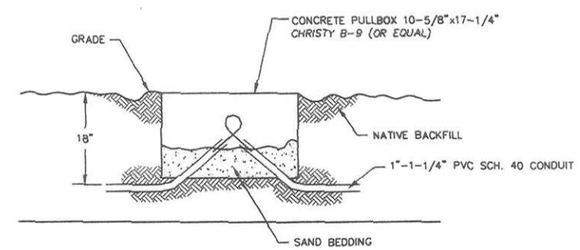

PULLBOX DETAIL (TYP.) (25 / E-4) E-3

REVISION	DATE	DESCRIPTION	BY	BY
1	3/8/99	AS BUILT DRAWINGS	TRS	DB

INTERNATIONAL TECHNOLOGY CORPORATION, 4585 PACHECO BLVD, MARTINEZ, CA. 94553, (925) 372-9100

DEPARTMENT OF THE NAVY, ENGINEERING FIELD ACTIVITY WEST, SAN BRUNO, CALIFORNIA

DESIGNED: R. HAYASHI

DRAWN: J.A.C. 1/26/99

CHECKED:

HUNTERS POINT SHIPYARD SAN FRANCISCO, CALIFORNIA

SITE IR-1/21 INDUSTRIAL LANDFILL
GROUNDWATER EXTRACTION SYSTEM/
CONTAINMENT BARRIER
ELECTRICAL LAYOUT
COLLECTION AND MONITORING PAD
AS-BUILT

SUBMITTED: DATE APPROVED:

SCALE: AS SHOWN SPEC No.

SHEET E-4 19 OF 19 FILE No. 767497-E39

Appendix B

Material Cut and Data Sheets

N00217.003880
HUNTERS POINT
SSIC # 5090.3

APPENDIX B
MATERIAL CUT AND DATA SHEETS

FINAL POST-CONSTRUCTION REPORT
SITE IR 1/21 INDUSTRIAL LANDFILL
GROUNDWATER EXTRACTION SYSTEM/
CONTAINMENT BARRIER

THE ABOVE IDENTIFIED APPENDIX HAS MISSING PAGES. IT COULD NOT BE DETERMINED WHETHER THESE PAGES ARE MISSING OR THE DOCUMENT WAS ISSUED WITHOUT THESE PAGES.

QUESTIONS MAY BE DIRECTED TO:

DIANE C. SILVA
RECORDS MANAGEMENT SPECIALIST
SOUTHWEST
NAVAL FACILITIES ENGINEERING COMMAND
1220 PACIFIC HIGHWAY
SAN DIEGO, CA 92132

TELEPHONE: (619) 532-3676

Appendix B.1

Groundwater Extraction System Materials

Section 1

Extraction Well System Materials

EXTRACTION SYSTEM MATERIAL SCHEDULE

ID	TYPE	DESCRIPTION	MANUFACTURER	MODEL/ PART NO.	DISTRIBUTOR	PHONE NO.
BS-20	2" Basket type (Bronze)	Collection/monitoring pad influent	Mueller Steam Specialty	125F-B	Vintage Water Works Supply	(707) 431-7473
CKV-108	1" Swing (Bronze)	EW-108 discharge check	Stockham Valves & Fittings	B-320B	Vintage Water Works Supply	(707) 431-7473
CKV-122	1" Swing (Bronze)	EW-122 discharge check	Stockham Valves & Fittings	B-320B	Vintage Water Works Supply	(707) 431-7473
CKV-134	1" Swing (Bronze)	EW-134 discharge check	Stockham Valves & Fittings	B-320B	Vintage Water Works Supply	(707) 431-7473
CKV-138	1" Swing (Bronze)	EW-138 discharge check	Stockham Valves & Fittings	B-320B	Vintage Water Works Supply	(707) 431-7473
CKV-142	1" Swing (Bronze)	EW-142 discharge check	Stockham Valves & Fittings	B-320B	Vintage Water Works Supply	(707) 431-7473
CKV-146	1" Swing (Bronze)	EW-146 discharge check	Stockham Valves & Fittings	B-320B	Vintage Water Works Supply	(707) 431-7473
CKV-150	1" Swing (Bronze)	EW-150 discharge check	Stockham Valves & Fittings	B-320B	Vintage Water Works Supply	(707) 431-7473
CKV-154	1" Swing (Bronze)	EW-154 discharge check	Stockham Valves & Fittings	B-320B	Vintage Water Works Supply	(707) 431-7473
CKV-158	1" Swing (Bronze)	EW-158 discharge check	Stockham Valves & Fittings	B-320B	Vintage Water Works Supply	(707) 431-7473
CKV-187	3" Swing (Bronze)	Discharge to MH #187 check	Stockham Valves & Fittings	B-342	Vintage Water Works Supply	(707) 431-7473
EJ-01	2" Expansion Joint (Teflon)	Collection/Monitoring Pad pipeline	EGC Corporation	M-150	EGC Corporation	(713) 447-8611
FE, FQ, FI, FT-30	2" Turbine type (304 SS)	Collection/Monitoring Pad flow element, quantifier, indicator, transmitter	SeaMetrics	WTS101-200	Court & Thomas Company, Inc.	(909) 982-1377
FE,FQ,FI-108	1" Disc type (Bronze)	P-108 flow element, quantifier, indicator	Badger Meter, Inc.	M25	Vintage Water Works Supply	(707) 431-7473
FE,FQ,FI-122	1" Disc type (Bronze)	P-122 flow element, quantifier, indicator	Badger Meter, Inc.	M25	Vintage Water Works Supply	(707) 431-7473
FE,FQ,FI-134	1" Disc type (Bronze)	P-134 flow element, quantifier, indicator	Badger Meter, Inc.	M25	Vintage Water Works Supply	(707) 431-7473
FE,FQ,FI-138	1" Disc type (Bronze)	P-138 flow element, quantifier, indicator	Badger Meter, Inc.	M25	Vintage Water Works Supply	(707) 431-7473
FE,FQ,FI-142	1" Disc type (Bronze)	P-142 flow element, quantifier, indicator	Badger Meter, Inc.	M25	Vintage Water Works Supply	(707) 431-7473
FE,FQ,FI-146	1" Disc type (Bronze)	P-146 flow element, quantifier, indicator	Badger Meter, Inc.	M25	Vintage Water Works Supply	(707) 431-7473
FE,FQ,FI-150	1" Disc type (Bronze)	P-150 flow element, quantifier, indicator	Badger Meter, Inc.	M25	Vintage Water Works Supply	(707) 431-7473
FE,FQ,FI-154	1" Disc type (Bronze)	P-154 flow element, quantifier, indicator	Badger Meter, Inc.	M25	Vintage Water Works Supply	(707) 431-7473
FE,FQ,FI-158	1" Disc type (Bronze)	P-158 flow element, quantifier, indicator	Badger Meter, Inc.	M25	Vintage Water Works Supply	(707) 431-7473
P-108	4" Submersible Centrifugal (Stainless Steel) Pump	EW-108 groundwater extraction	Grundfos Pumps Corp.	10S/ 10S03-6	Boart Longyear Co.	(510) 606-9299
P-122	4" Submersible Centrifugal (Stainless Steel) Pump	EW-122 groundwater extraction	Grundfos Pumps Corp.	10S/ 10S03-6	Boart Longyear Co.	(510) 606-9299
P-134	4" Submersible Centrifugal (Stainless Steel) Pump	EW-134 groundwater extraction	Grundfos Pumps Corp.	7S/ 7S03-8	Boart Longyear Co.	(510) 606-9299
P-138	4" Submersible Centrifugal (Stainless Steel) Pump	EW-138 groundwater extraction	Grundfos Pumps Corp.	7S/ 7S03-8	Boart Longyear Co.	(510) 606-9299
P-142	4" Submersible Centrifugal (Stainless Steel) Pump	EW-142 groundwater extraction	Grundfos Pumps Corp.	7S/ 7S03-8	Boart Longyear Co.	(510) 606-9299
P-146	4" Submersible Centrifugal (Stainless Steel) Pump	EW-146 groundwater extraction	Grundfos Pumps Corp.	7S/ 7S03-8	Boart Longyear Co.	(510) 606-9299
P-150	4" Submersible Centrifugal (Stainless Steel) Pump	EW-150 groundwater extraction	Grundfos Pumps Corp.	7S/ 7S03-8	Boart Longyear Co.	(510) 606-9299
P-154	4" Submersible Centrifugal (Stainless Steel) Pump	EW-154 groundwater extraction	Grundfos Pumps Corp.	7S/ 7S03-8	Boart Longyear Co.	(510) 606-9299
P-158	4" Submersible Centrifugal (Stainless Steel) Pump	EW-158 groundwater extraction	Grundfos Pumps Corp.	7S/ 7S03-8	Boart Longyear Co.	(510) 606-9299
PI-10	Pressure Gauge - 0/100 psi (304 SS)	Collection/Monitoring Pad influent	Ashcroft	3000 Grade B	Associated Process Controls	(510) 846-9000
PI-50	Pressure Gauge - 0/100 psi (304 SS)	Collection/Monitoring Pad discharge	Ashcroft	3000 Grade B	Associated Process Controls	(510) 846-9000
PI-108	Pressure Gauge - 0/100 psi (304 SS)	P-108 discharge	Ashcroft	3000 Grade B	Associated Process Controls	(510) 846-9000
PI-122	Pressure Gauge - 0/100 psi (304 SS)	P-122 discharge	Ashcroft	3000 Grade B	Associated Process Controls	(510) 846-9000
PI-134	Pressure Gauge - 0/100 psi (304 SS)	P-134 discharge	Ashcroft	3000 Grade B	Associated Process Controls	(510) 846-9000
PI-138	Pressure Gauge - 0/100 psi (304 SS)	P-138 discharge	Ashcroft	3000 Grade B	Associated Process Controls	(510) 846-9000
PI-142	Pressure Gauge - 0/100 psi (304 SS)	P-142 discharge	Ashcroft	3000 Grade B	Associated Process Controls	(510) 846-9000
PI-146	Pressure Gauge - 0/100 psi (304 SS)	P-146 discharge	Ashcroft	3000 Grade B	Associated Process Controls	(510) 846-9000
PI-150	Pressure Gauge - 0/100 psi (304 SS)	P-150 discharge	Ashcroft	3000 Grade B	Associated Process Controls	(510) 846-9000

EXTRACTION SYSTEM MATERIAL SCHEDULE

ID	TYPE	DESCRIPTION	MANUFACTURER	MODEL/ PART NO.	DISTRIBUTOR	PHONE NO.
PI-154	Pressure Gauge - 0/100 psi (304 SS)	P-154 discharge	Ashcroft	3000 Grade B	Associated Process Controls	(510) 846-9000
PI-158	Pressure Gauge - 0/100 psi (304 SS)	P-158 discharge	Ashcroft	3000 Grade B	Associated Process Controls	(510) 846-9000
PRV-40	1-1/2" Pressure Reducer (Bronze)	Collection/Monitoring Pad discharge	Watts Industries, Inc.	25AUB	Vintage Water Works Supply	(707) 431-7473
PE, PT, PSH-10	Pressure Switch - 0/100psi	Collection/Monitoring Pad influent - pressure switch high	Ashcroft	B400	Associated Process Controls	(510) 846-9000
PE, PT, PSH-108	Pressure Switch - 0/100psi	P-108 discharge - pressure switch high	Ashcroft	B400	Associated Process Controls	(510) 846-9000
PE, PT, PSH-122	Pressure Switch - 0/100psi	P-122 discharge - pressure switch high	Ashcroft	B400	Associated Process Controls	(510) 846-9000
PE, PT, PSH-134	Pressure Switch - 0/100psi	P-134 discharge - pressure switch high	Ashcroft	B400	Associated Process Controls	(510) 846-9000
PE, PT, PSH-138	Pressure Switch - 0/100psi	P-138 discharge - pressure switch high	Ashcroft	B400	Associated Process Controls	(510) 846-9000
PE, PT, PSH-142	Pressure Switch - 0/100psi	P-142 discharge - pressure switch high	Ashcroft	B400	Associated Process Controls	(510) 846-9000
PE, PT, PSH-146	Pressure Switch - 0/100psi	P-146 discharge - pressure switch high	Ashcroft	B400	Associated Process Controls	(510) 846-9000
PE, PT, PSH-150	Pressure Switch - 0/100psi	P-150 discharge - pressure switch high	Ashcroft	B400	Associated Process Controls	(510) 846-9000
PE, PT, PSH-154	Pressure Switch - 0/100psi	P-154 discharge - pressure switch high	Ashcroft	B400	Associated Process Controls	(510) 846-9000
PE, PT, PSH-158	Pressure Switch - 0/100psi	P-158 discharge - pressure switch high	Ashcroft	B400	Associated Process Controls	(510) 846-9000
V-01	1" Gate (Bronze)	PE-10/PI-10 isolation	Stockham Valves & Fittings	B-103	Vintage Water Works Supply	(707) 431-7473
V-02	2" Globe (Bronze)	Influent isolation	Stockham Valves & Fittings	B-40	Vintage Water Works Supply	(707) 431-7473
V-03	1" Gate (Bronze)	Blind branch isolation	Stockham Valves & Fittings	B-103	Vintage Water Works Supply	(707) 431-7473
V-04	1" Gate (Bronze)	PI-50 isolation	Stockham Valves & Fittings	B-103	Vintage Water Works Supply	(707) 431-7473
V-05	1/2" Needle (Bronze)	Sample port	Milwaukee Valve Co.	Globe 600	Familian Pipe & Supply	(415) 626-5781
V-06	2" Gate (Bronze)	Discharge pipe isolation	Stockham Valves & Fittings	B-103	Vintage Water Works Supply	(707) 431-7473
V-07	2" Gate (Bronze)	Manual air bleed/drain port	Stockham Valves & Fittings	B-103	Vintage Water Works Supply	(707) 431-7473
V108-1	1" Ball (PVC)	P-108 isolation	Chemtrol	29601808A	Familian Pipe & Supply	(415) 626-5781
V108-2	1/2" Needle (Bronze)	Sample port	Milwaukee Valve Co.	Globe 600	Familian Pipe & Supply	(415) 626-5781
V108-3	1/2" Ball (Bronze)	PE-108/PI-108 isolation	Milwaukee Valve Co.	BA-150	Familian Pipe & Supply	(415) 626-5781
V108-4	1" Globe (Bronze)	P-108 flow control	Stockham Valves & Fittings	B-40	Vintage Water Works Supply	(707) 431-7473
V122-1	1" Ball (PVC)	P-122 isolation	Chemtrol	29601808A	Familian Pipe & Supply	(415) 626-5781
V122-2	1/2" Needle (Bronze)	Sample port	Milwaukee Valve Co.	Globe 600	Familian Pipe & Supply	(415) 626-5781
V122-3	1/2" Ball (Bronze)	PE-122/PI-122 isolation	Milwaukee Valve Co.	BA-150	Familian Pipe & Supply	(415) 626-5781
V122-4	1" Globe (Bronze)	P-122 flow control	Stockham Valves & Fittings	B-40	Vintage Water Works Supply	(707) 431-7473
V134-1	1" Ball (PVC)	P-134 isolation	Chemtrol	29601808A	Familian Pipe & Supply	(415) 626-5781
V134-2	1/2" Needle (Bronze)	Sample port	Milwaukee Valve Co.	Globe 600	Familian Pipe & Supply	(415) 626-5781
V134-3	1/2" Ball (Bronze)	PE-134/PI-134 isolation	Milwaukee Valve Co.	BA-150	Familian Pipe & Supply	(415) 626-5781
V134-4	1" Globe (Bronze)	P-134 flow control	Stockham Valves & Fittings	B-40	Vintage Water Works Supply	(707) 431-7473
V138-1	1" Ball (PVC)	P-138 isolation	Chemtrol	29601808A	Familian Pipe & Supply	(415) 626-5781
V138-2	1/2" Needle (Bronze)	Sample port	Milwaukee Valve Co.	Globe 600	Familian Pipe & Supply	(415) 626-5781
V138-3	1/2" Ball (Bronze)	PE-138/PI-138 isolation	Milwaukee Valve Co.	BA-150	Familian Pipe & Supply	(415) 626-5781
V138-4	1" Globe (Bronze)	P-138 flow control	Stockham Valves & Fittings	B-40	Vintage Water Works Supply	(707) 431-7473
V142-1	1" Ball (PVC)	P-142 isolation	Chemtrol	29601808A	Familian Pipe & Supply	(415) 626-5781
V142-2	1/2" Needle (Bronze)	Sample port	Milwaukee Valve Co.	Globe 600	Familian Pipe & Supply	(415) 626-5781
V142-3	1/2" Ball (Bronze)	PE-142/PI-142 isolation	Milwaukee Valve Co.	BA-150	Familian Pipe & Supply	(415) 626-5781
V142-4	1" Globe (Bronze)	P-142 flow control	Stockham Valves & Fittings	B-40	Vintage Water Works Supply	(707) 431-7473
V146-1	1" Ball (PVC)	P-146 isolation	Chemtrol	29601808A	Familian Pipe & Supply	(415) 626-5781

BS-20

125F Cast Iron
125F-B Bronze
125F-CS Carbon Steel
125F-SS Stainless Steel

Pressure-Temperature Rating

Cast Iron	200 p.s.i. — WOG
Bronze	225 p.s.i. — WOG
Carbon Steel	285 p.s.i. — WOG
Stainless Steel	275 p.s.i. — WOG

SERVICE RECOMMENDATIONS:

These strainers are used to strain foreign matter from pipe lines and provide inexpensive protection for costly pumps, meters, valves and similar mechanical equipment. They are available in a variety of materials other than those listed below. In the appropriate material the 125F can be specified for drinking water, cooling water, hot water systems, sea water. Just a few of the applications in the chemical process industry are: brine, paint, heat exchangers, condensers, fuel oil, organic and inorganic chemicals.

FEATURES:

These strainers have been designed for applications where easy maintenance and large capacity straining are needed. Service time is minimal because the cover is secured with quick opening, non-yoke type knobs. Both the cover and basket use O-ring seals, eliminating the need to replace gaskets each time the strainer is serviced. This, combined with the machined basket seat, eliminates particle bypass. With the appropriate wire mesh these strainers can be used to strain particles as small as 5 microns.

CONSTRUCTION:

Cast body with cast or plate cover. All sizes feature O-ring cover seals. Baskets are O-ring sealed in machined seats. Quick release knobs are ductile iron. Studs and nuts are alloy steel. Ductile iron swing clamps are available on request for sizes 4" and up. A plugged NPT connection is provided at location "D". Floor supports with bolting holes are provided on sizes 4" and larger.

Sizes 1" through 4" have .062" perforated stainless steel baskets. Sizes 5" and larger have 1/8" perforated stainless steel baskets. Other perforations and materials are available on request.

SWING CLAMPS are available on sizes 4" and larger. Consult factory for recommended applications.

CAPACITY:

Minimum 6 to 1 ratio.

GALVANIZING:

Available on cast iron models. Other coatings are available on application.

NOW AVAILABLE

Fully lined strainers for corrosive service. Compatible with lined piping systems.

MATERIALS:

Cast Iron ASTM A126-B
Bronze ASTM B62 (type 85-5-5-5)
Carbon Steel ASTM A216 Grade WCB
Stainless Steel ASTM A351 Grade CF8M

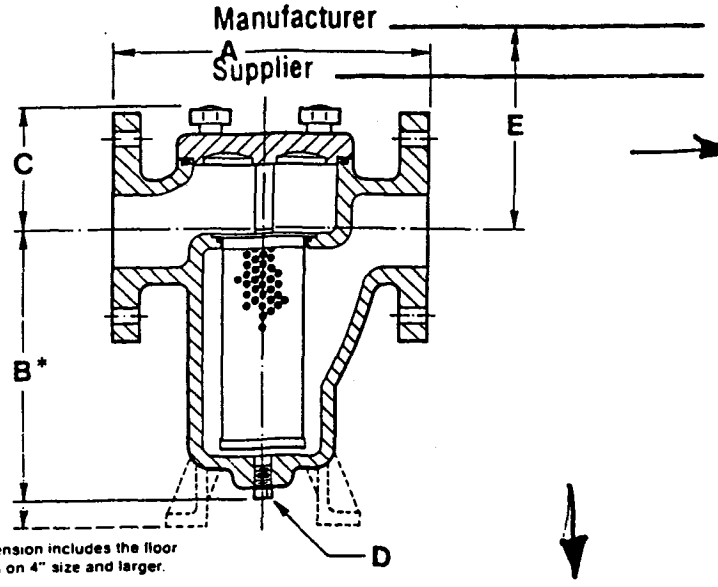

* "B" dimension includes the floor supports on 4" size and larger.

DIMENSIONS AND APPROXIMATE WEIGHTS (Apply for certified drawings)

SIZE	1"	1 1/4"	1 1/2"	2"	2 1/2"	3"	4"	5"	6"	8"
A	5 11/16	6 15/16	6 15/16	9	10 3/8	11 3/4	15	18 3/8	20 1/4	27 3/8
B	4 11/16	6 1/2	6 1/2	7 7/8	8 3/4	11 3/8	15 7/8	18 3/8	22 3/8	27 3/4
C	2 3/4	3	3	3 3/8	4	4 1/2	5 3/4	7 7/16	8 3/16	9 3/16
D	3/8"NPT	1/2"NPT	1/2"NPT	3/4"NPT	1"NPT	1"NPT	2"NPT	1 1/2"NPT	2"NPT	2"NPT
E Screen Removal	5 7/8	8 1/8	8 1/8	10 1/8	11 7/16	14 13/16	19 7/8	25 9/16	29 1/8	37 1/8
Weights										
Cast Iron	9	15	15	26	38	62	118	170	266	518
Bronze	11	18	18	31	45	72	147	210	315	553
Carbon St. & SS	10	16	16	25	41	65	135	190	270	497

MUELLER STEAM SPECIALTY

Rt. 2 Box 44 / N.C. Hwy. 20 West, St. Pauls, NC 28384 USA
Tel: 910-865-8241 FAX: 910-865-8245

BASKET TYPE STRAINERS

BASKET TYPE STRAINERS

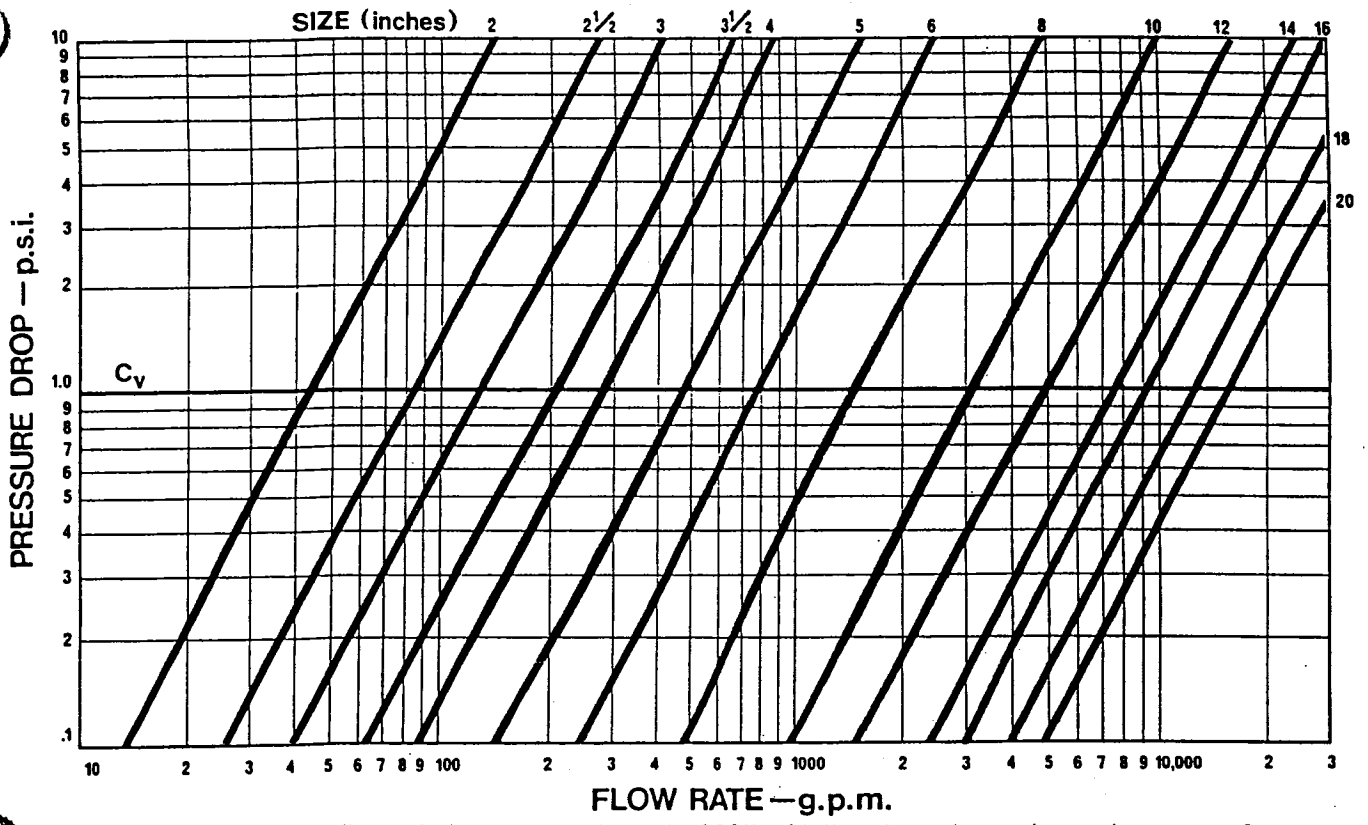

This chart is based on the flow of clean water through .033" - 1/4" inch perforated metal screens. Consult our Engineering Department for pressure drop information on steam, gases or viscous fluids. For mesh lined perforated baskets, multiply pressure loss by 1.25.

THEORETICAL PRESSURE DROP CURVE FOR SCREEN CLOGGING

Select the anticipated clogging (%) at the left of the chart. The example shows a basket 50% clogged. Then, follow that valve to the right until the curve is intersected. From that point follow downward to the scale along the bottom to read the pressure drop multiplying factor, in this case 2. The resulting pressure drop across the basket at 50% clogged is twice as great as that for a clean basket. See the chart above for clean basket pressure drop valves.

EXAMPLE: How much is the pressure drop through a 10" basket strainer for a flow of 2480 GPM of water at ambient temperature with 1/8" perforated basket which is 50% clogged? Find the pressure drop for a clean basket from above. At 2480 GPM of the pressure drop is .6 As described above the multiplying factor for a 50% clogged basket is 2. The pressure drop is then .6 PSI x 2 = 1.2 PSI.

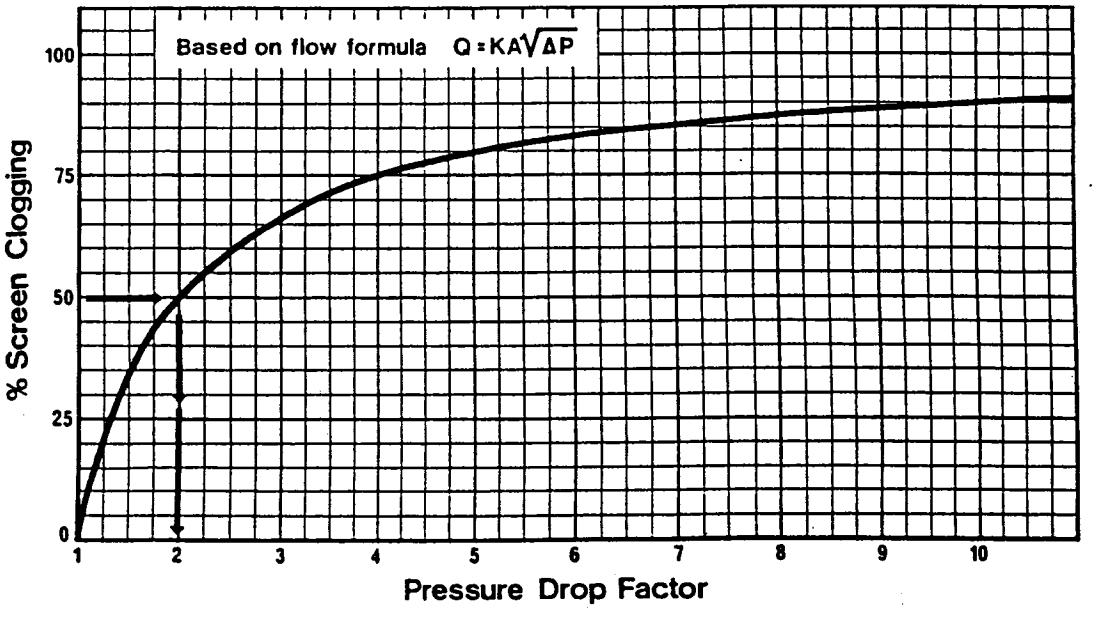

MUELLER STEAM SPECIALTY

Rt. 2 Box 44 / N.C. Hwy. 20 West, St. Pauls, NC 28384 USA
Tel: 910-865-8241 FAX: 910-865-8245

CKV-***

CLASS 125 BRONZE SWING CHECK VALVES

FIGS: B-310B B-310T B-320B B-320T

THREADED CAP • BUNA-N OR TEFLON™ DISC

BRONZE VALVES

SEE PAGE 44 FOR PRESSURE-TEMPERATURE RATINGS.

SERVICE FEATURES

Buna-N disc provides tight shutoff with air and gases up to 150°F. • Quieter operation results from use of soft discs. • TFE disc suitable for services to 450°F. • Stockham swing check valves may be installed in both horizontal and vertical lines with upward flow.

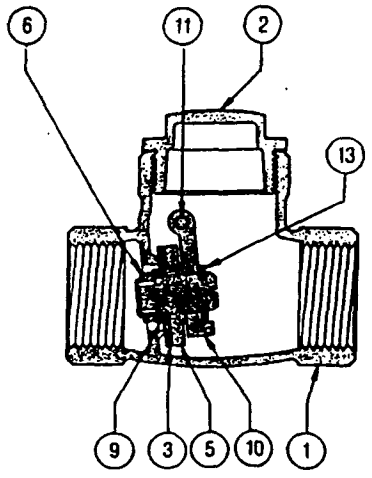

B-320B

NO.	DESCRIPTION	MATERIAL	ASTM SPEC.	UNS NO.
1	BODY	BRONZE	B-62	C83600
2	CAP	BRONZE	B-62	C83600
*3	DISC	BUNA-N		
5	DISC HOLDER	BRASS (3/8-3/4)	B-16	C36000
		BRONZE (1-2)	B-62	C83600
6	DISC NUT	BRASS	B-16	C36000
9	DISC WASHER	PHOSPHOR BRONZE (3/8-1/2)		
		BRASS (3/4-1 1/4)		
		STAINLESS STEEL (1 1/2-2)	18-8 Passivated	
10	HINGE	BRONZE	B-62	C83600
11	HINGE PIN	BRASS	B-16	C36000
13	RETAINING RING	BERYLLIUM COPPER (3/8-1)		
		STAINLESS STEEL (1 1/4-2)	18-8 Passivated	
†15	SIDE PLUG	BRASS	B-16	C36000

* Available in Teflon™ B-310T or B-320T
† Not Shown

Conforms to MSS-SP-80 Type 3

ontract # 4
ransmittal #
em #
roject
ubcontractor
Manufacturer
Supplier

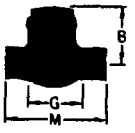

†B-310B, SOLDER ENDS

SIZE	WGT.	B	G*	M
1/2	.5	1.56	1.44	2.44
3/4	.8	1.81	1.75	3.13
1	1.4	2.13	2.00	3.78
1 1/4	2.0	2.66	2.31	3.22
1 1/2	3.1	3.00	2.69	4.94
2	4.8	3.47	3.31	5.84

†Saturated steam pressure for solder end valves should not exceed 15PSI.
* Piping Make-Up Dimension

B-320B, THREADED ENDS

SIZE	WGT.	B	M
3/8	.4	1.38	2.19
1/2	.6	1.56	2.50
3/4	.9	1.81	2.69
1	1.6	2.13	3.44
1 1/4	2.4	2.66	3.63
1 1/2	3.5	3.00	4.25
2	5.2	3.47	4.88

CKV-187

CLASS 150 BRONZE SWING CHECK VALVES

FIGS: B-340 B-342

BRONZE DISC • REGRINDING

BRONZE VALVES

SEE PAGE 44 FOR PRESSURE-TEMPERATURE RATINGS.

SERVICE FEATURES

Stop plug provides opening for screwdriver to rotate disc and regrind seat. Bolted cap utilizes large bearing surface with gasket for tight-seal. • Swing checks offer full flow with minimum of turbulence and pressure drop. • Stockham swing check valves may be installed in both horizontal and vertical lines with upward flow.

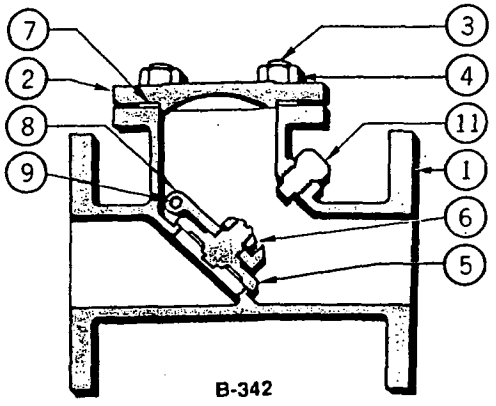

B-342

NO.	DESCRIPTION	MATERIAL	ASTM SPEC.	UNS NO.
1	BODY	BRONZE	B-62	C83600
2	CAP	BRONZE	B-62	C83600
3	CAP STUD B-342	STEEL	A-307 Grade A	
4	CAP STUD NUT B-342	BRASS	B-16	C36000
5	DISC	BRONZE	B-62	C83600
6	DISC NUT	BRASS	B-16	C36000
7	GASKET B-342	NONASBESTOS		
8	HINGE	BRONZE	B-62	C83600
9	HINGE PIN	BRASS	B-16	C36000
†10	SIDE PLUG	BRASS (1¼-2)	B-16	C36000
		BRONZE (2½-4)	B-62	C83600
11	STOP PLUG	BRASS (1¼-2)	B-16	C36000
		BRONZE (2½-4)	B-62	C83600

†Not Shown

Do not use with reciprocating pumps or compressors.

Conforms to MSS-SP-80 Type 3

5

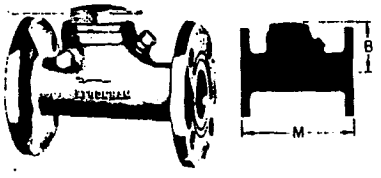

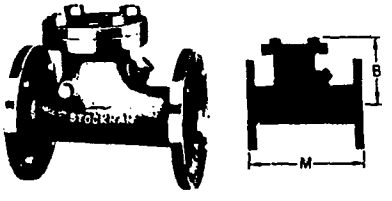

B-340, THREADED CAP, FLANGED ENDS

SIZE	WGT.	B	M
1¼	7.2	2.63	5.63
1½	9.1	2.97	6.13
2	15	3.81	7.38

B-342, BOLTED CAP, FLANGED ENDS

SIZE	WGT.	B	M
2	18	4.63	7.38
2½	33	5.41	8.75
3	38	5.81	9.50
4	63	6.50	11.25

EJ-01

PLASTIC OMNIUM

ISO 9001 CERTIFIED

EGC Teflon Expansion Joint Installation Instructions

Molded Expansion Joints, Style M-150, ~~and Flexible Couplings, Style M-149~~

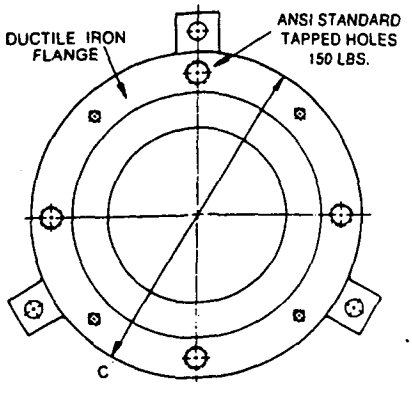

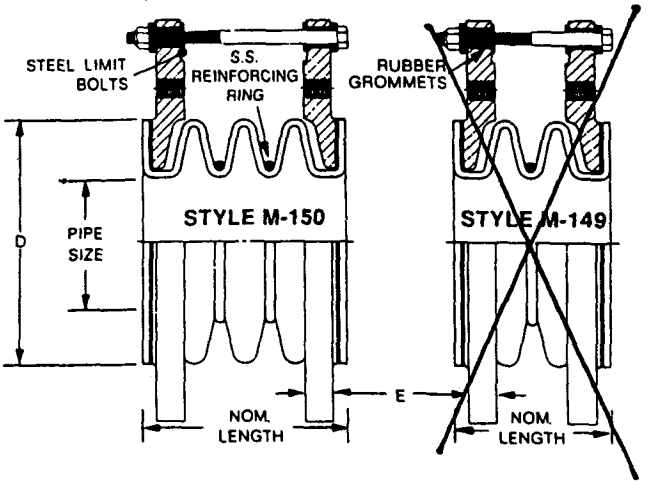

Machined Expansion Joints, Style K-100, and Flexible Couplings, Style K-100S

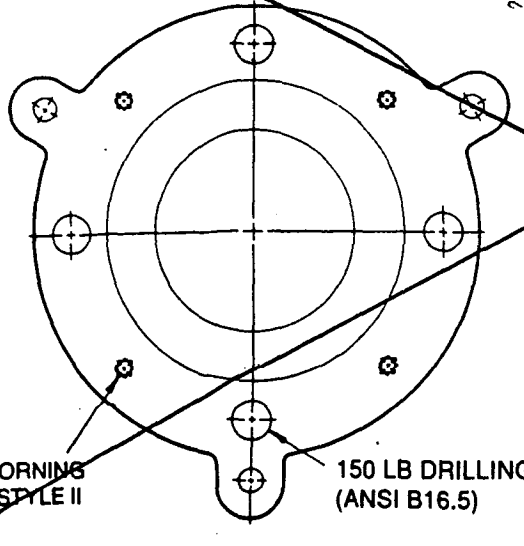

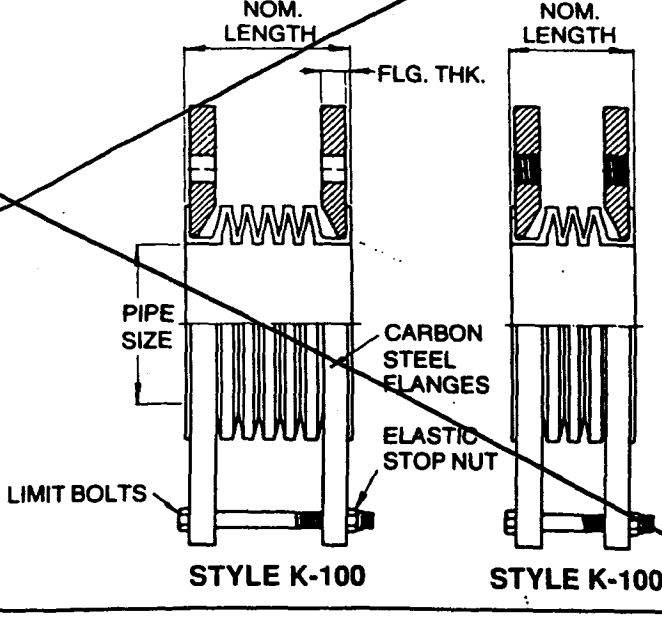

Molded Joint Movements

The flexible molded bellows of an M-150 expansion joint is capable of handling all of the following movements:

Longitudinal — also called travel or axial compression and extension

Angular Misalignment — called angular deflection and angular rotation, is the displacement of one flange in relation to the other causing them to lie in non-parallel planes

Parallel Misalignment — called offset or lateral deflection, is the displacement of one flange in relation to the other while they lie in parallel planes

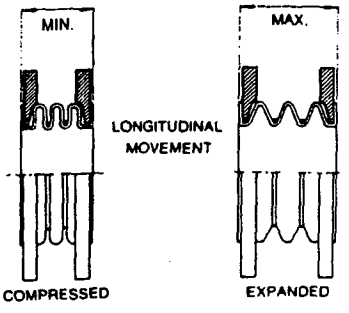

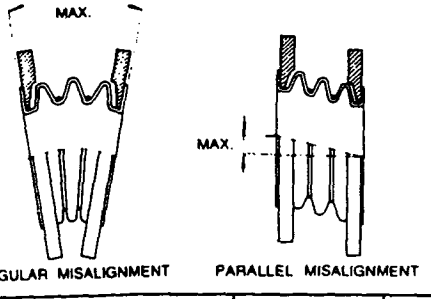

Style	Nom. Size	Longitudinal Movement		Angular Max. Misalign. Degrees	Parallel Max. Misalign. Offset
		Min. Compressed Length	Max. Expanded Length		
M-150	1½"	2¼"	3¼"	34°	¼"
M-149	1½"	1¾"	2¼"	19°	⅛"
M-150	2"	2¾"	3¾"	28°	⅜"
M-149	2"	2⅛"	2⅞"	21°	⅛"
M-150	2½"	2¾"	3¾"	22°	⅜"
M-149	2½"	2⅛"	2⅞"	17°	⅛"
M-150	3"	2¾"	3¾"	20°	⅜"
M-149	3"	2⅛"	2⅞"	14°	⅛"
M-150	4"	3¼"	4¾"	20°	½"
M-149	4"	2½"	3½"	14°	¼"
M-150	5"	3¼"	4¾"	12°	½"
M-149	5"	2½"	3½"	11°	¼"
M-150	6"	3¼"	4¾"	14°	½"
M-149	6"	2½"	3½"	10°	¼"
M-150	8"	3¼"	4¾"	14°	½"
M-149	8"	2½"	3½"	7°	¼"
M-150	10"	4"	6"	12°	⅝"
M-149	10"	3⅛"	4⅜"	7°	¼"
M-150	12"	4"	6"	10°	⅝"
M-149	12"	3⅛"	4⅜"	6°	¼"

MAXIMUM TRAVEL is based on installation with no Misalignment or Angular Deflection.
MAXIMUM MISALIGNMENT is based on installation with no Travel or Angular Deflection.
COMBINED TRAVEL AND MISALIGNMENT are proportionately lower for each type of deflection according to the percentage of the "Maximum" that is required for the other.

Molded Joint Working Pressure vs. Temperature

The graphs below indicate that M-150 PTFE molded joints, like other expansion joints, and M-149 couplings drop in pressure rating as the temperature increases. It is important to note however that burst pressure of M-150 joints (or that pressure at which bellows failure normally occurs) is approximately four times that of their working pressure. Please consult our engineering staff for modifications if pressure and temperatures in your application exceed those shown below.

M-150

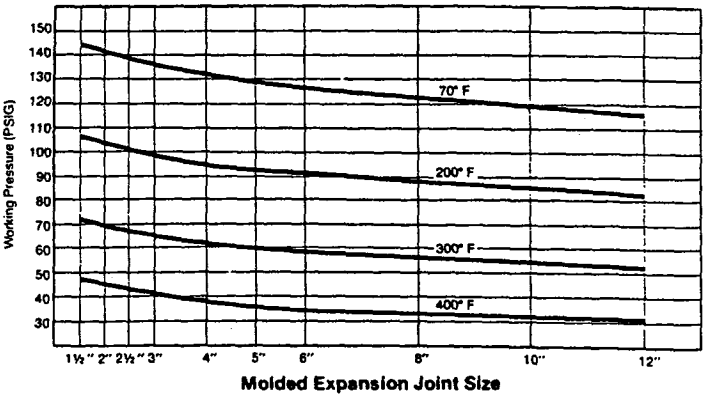

M-149

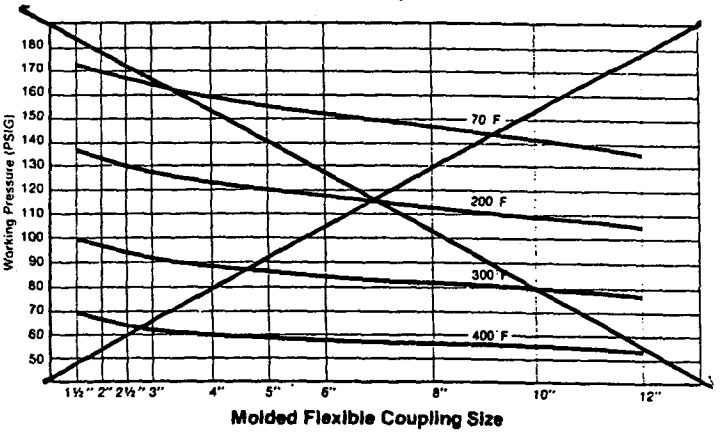

Vacuum Service

M-150 and M-149 molded joints, with their thick walls of highest quality PTFE, are designed to operate under full vacuum conditions. The graph below shows the maximum operating temperature each bellows size will withstand under full vacuum. For higher temperature/full vacuum applications, consult EGC for special designs.

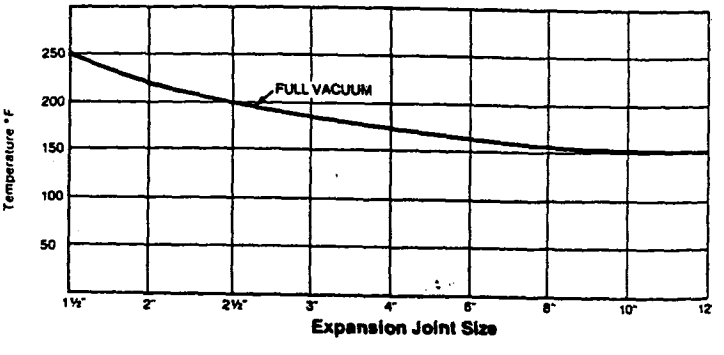

Machined Joint Movements

As in the case of molded joints, EGC K-100 machined joints and K-100S flexible couplings are capable of handling longitudinal and angular/parallel misalignment.

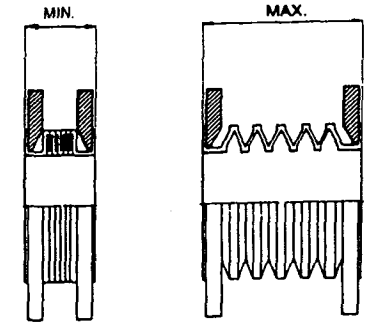

LONGITUDINAL MOVEMENT

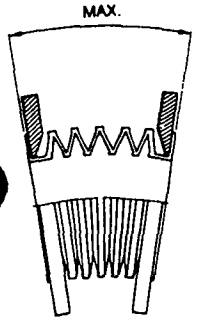

ANGULAR MISALIGNMENT

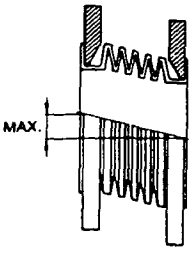

PARALLEL MISALIGNMENT

Pipe Size	Style	Longitudinal Movement		Angular	Parallel
		Min. Compressed Length	Max. Expanded Length	Max. Misalignment Degrees	Max. Misalignment Offset
1"	K-100	1.375	2.500	32°	.125
	K-100S	.937	1.312	11°	.062
1½"	K-100	1.375	2.500	26°	.125
	K-100S	.937	1.312	9°	.062
2"	K-100	2.000	4.000	32°	.187
	K-100S	1.375	2.125	12°	.090
2½"	K-100	2.000	4.000	28°	.187
	K-100S	1.375	2.125	11°	.090
3"	K-100	2.500	5.125	32°	.250
	K-100S	1.375	2.175	10°	.125
4"	K-100	2.500	5.125	26°	.250
	K-100S	1.625	2.375	8°	.125
6"	K-100	2.500	5.250	20°	.250
	K-100S	1.625	2.375	5°	.125
8"	K-100	2.500	5.250	16°	.250
	K-100S	1.625	2.375	4°	.125
10"	K-100	3.000	6.500	16°	.312
	K-100S	1.750	3.000	6°	.156
12"	K-100	3.000	6.500	14°	.312
	K-100S	1.750	3.000	5°	.156
14"	K-100	3.000	6.500	12°	.312
	K-100S	1.750	3.000	5°	.156
16"	K-100	3.000	6.500	11°	.312
	K-100S	1.750	3.000	4°	.156
18"	K-100	3.000	6.500	10°	.312
	K-100S	1.750	3.000	4°	.156
20"	K-100	4.500	7.500	8°	.375
	K-100S	2.250	3.500	3°	.187
24"	K-100	4.500	7.500	7°	.375
	K-100S	2.250	3.500	3°	.187

Machined Joint Working Pressure vs. Temperature

The graph indicates the K-100 machined joints and K-100S couplings drop in pressure rating as the temperature increases. Consult our engineering staff if pressure and temperature in your application exceed those shown here.

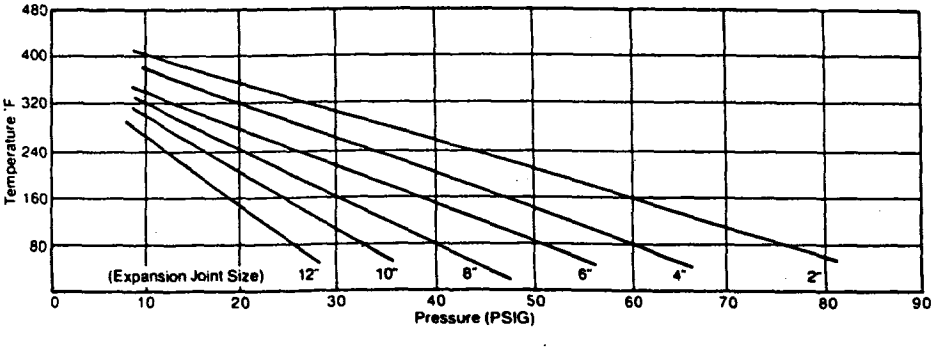

Vacuum Service

K-100 machined joints and K-100S flexible couplings are also designed to operate under full vacuum conditions. The graph shows the maximum operating temperature each bellows size will withstand under full vacuum. For higher temperature/full vacuum applications, consult EGC.

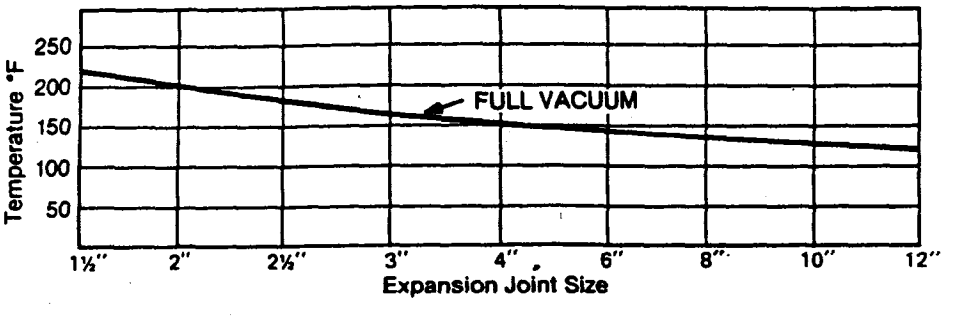

EGC Teflon Expansion Joint Installation Instructions

EGC Teflon expansion joints are precision products designed and manufactured for long and satisfactory life. Maximum service life and safety will be obtained only when the pipeline has the recommended number of anchors, guides and supports designed in accordance with good engineering practice.

The following installation procedures should be followed to insure proper performance and safety:

(1). Operating Conditions:
Check the operating limits of the expansion joint against the anticipated operating conditions expected in the field. The maximum operating conditions for EGC expansion joints may be found on the expansion joint name tag, EGC expansion joint bulletin, drawing or specification sheet. If you are unsure about the operating limits of the EGC Teflon expansion joint you are about to install, please contact EGC Corporation for information.

(2). Bolt Torque:
When installing flanged EGC Teflon expansion joints, follow the recommended bolt torque as shown below or on the tag, attached to the expansion joint or as specified on the drawing. Tighten all bolts gradually and equally by alternating around the flange.

IPS	TORQUE Ft.-Lbs.	IPS	TORQUE Ft.-Lbs.	IPS	TORQUE Ft.-Lbs.
1	10	4	30	14	70
1 1/2	15	6	45	16	65
2	25	8	60	18	90
2 1/2	30	10	50	20	80
3	40	12	60	24	90

After 24 hours, or one temperature/pressure cycle, all bolts should be checked.
Those falling below the minimum torque must be retorqued.

(3). Anchors, Guides and Support Requirements:
EGC Teflon expansion joints require that the piping components to which they are connected be anchored, guided, supported or otherwise restrained so that these forces do not flex or distort the expansion joint beyond its operating limits. In most piping systems containing one or more expansion joints, it is usually necessary to install anchors at any of the following locations, (a) at a change in direction of flow, (b) at a shut-off valve, (c) at blind ends of pipe, and (d) at major branch connections. Install sufficient pipe guides to insure proper application of movement to the expansion joint to direction permitted.
Provide support for piping at any point where the weight of the piping might cause the expansion joint to be flexed beyond its design limits.

(4). General Precautions:
An EGC Teflon expansion joint is designed to absorb motion by flexing. The bellows is sufficiently thick to withstand the design pressure; but also sufficiently thin to withstand its cyclic requirements. Optimum design will always require a bellows of thinner more flexible materials than virtually every other component of the piping system in which it is installed. The installer must recognize this and take all necessary measures to protect the Teflon bellows and seal surfaces during installation. Avoid denting, weld splatter, abrasion, etc., or the possibility of allowing foreign material to interfere with the proper flexing of the bellows. With reasonable care during storage, handling, and installation, the user will be assured of the reliability designed and built into EGC Teflon expansion joints.

(5). Safety Recommendation
EGC strongly recommends the use of splash guards with all expansion joint installations to protect personnel from hazardous liquids in the event of a leak, crack, or other failure of the joint. Failure to use properly fitting splash guards could result in severe injury to personnel and/or damage to property and equipment.

The information and data contained herein are based on test data, experience and information from material suppliers and is believed to be accurate. However, no guarantee is made or implied as to application suitability regarding the products or their performance. EGC reserves the right to change product specifications without prior notice.

For customized expansion joint needs contact your EGC sales representative

EGC Corporation
P.O. Box 16080, Houston, TX 77222
(713) 447-8611, 1-800-342-7677 (Outside Texas)
FAX: (713) 931-2201

FE, FQ, FI, FT-30

SeaMetrics

WT-S Stainless-Steel Body Turbine Meter Instructions

General Information

This unique system of 2" to 8" turbine meters uses one moving part, a precision-machined helical rotor. Rotation of the rotor is electronically detected and processed. High-quality jewel bearings and polished tungsten-carbide shafts minimize friction while providing long wear life in non-lubricating fluids. The entire rotor assembly can be easily taken out of the meter for field service, without removing the meter from the pipe.

WT-S bodies are fabricated from stainless steel. The standard turbine insert is machined from one solid piece of engineered plastic, which is mounted to a stainless flange. Turbine rotors are also machined from high-performance plastic, with Kynar (PVDF) as an optional material.

An electronic register (identical to the SeaMetrics FT410) can be mounted on the meter to display flow rate, total (resettable or non-resettable) and provide a programmable pulse output. The same unit, in a wall mount or panel mount housing, can be located up to 2,000 feet away. It is not necessary to have any processing electronics on the meter itself unless local reading is desired. Other electronics options (which can again be meter or remote mounted) are the AO45 blind 4-20 mA transmitter, the PD10 divider, and a battery-powered electromechanical totalizer for applications which lack power.

Specifications

Materials

Meter Body	T-304 Stainless, T-316 optional
Turbine Insert	Polysulfone
Turbine Rotor	Polypro, Kynar optional
Shafts	Ceramic
Bearings	Sapphire journal, ruby endstone

Pressure	200 PSI working
Temperature	
Standard	140° F
High-temp	250° F
Accuracy	± 1% FS

Flow Range (GPM)

	1-1/2"	2"	3"	4"	6"	8"
Min	2	2	3	6	12	30
Max	150	150	400	600	1200	3000

Features

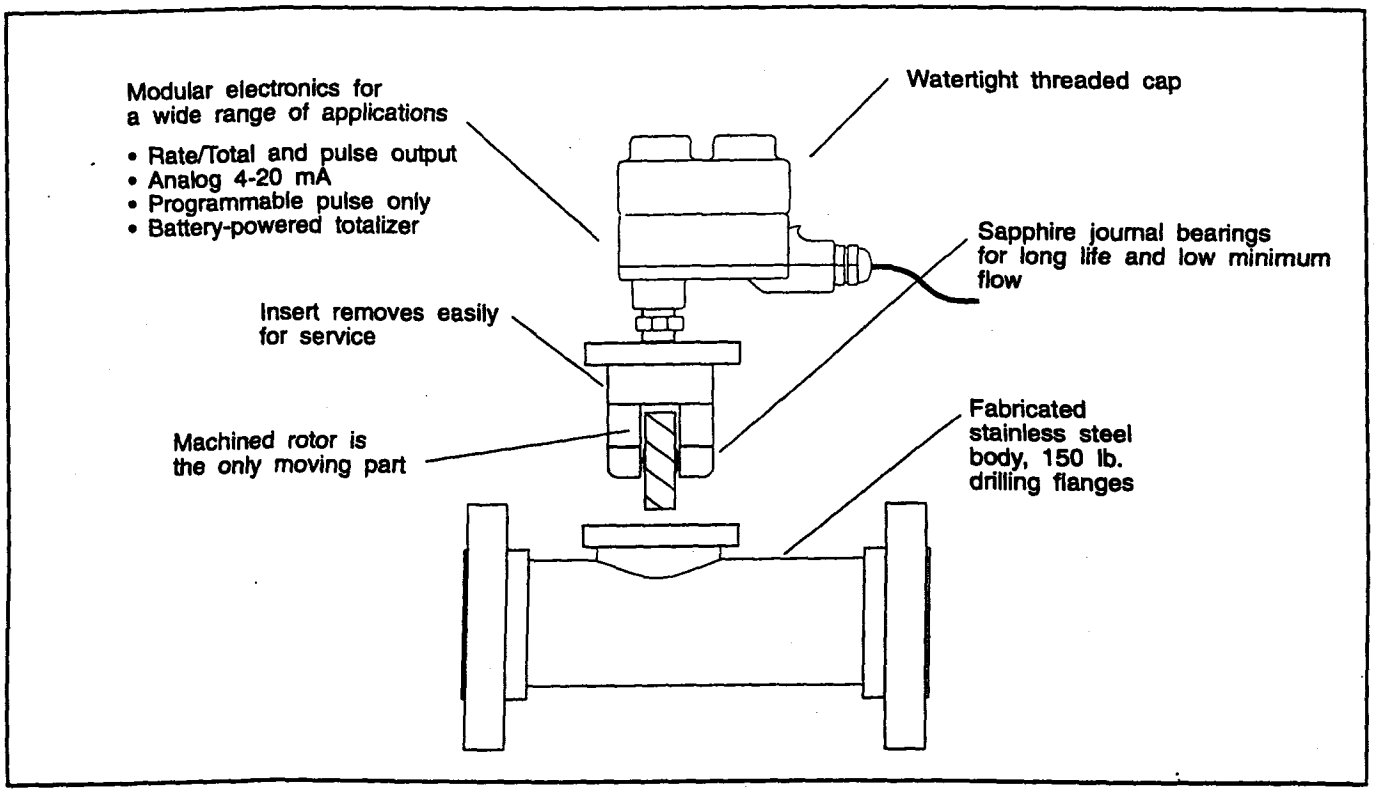

Electronic Options Specifications

WT100 (Pulse Only)

Power	6-24 VDC
Pulse Type	Current sinking

WT100 with PD10 Divider

Power	12 - 24 VDC
Divider Range	1 - 4,095
Output	Current sinking, 20 mA max.

WT101 (FT410 Rate/Total)

Power	11-28 VDC, 20 mA max
Rate	8-digit autorange
Total	8-digit, selectable decimal Reset standard, non-reset option
Memory	Nonvolatile (no battery needed)
Pulse Output	0.1 second, open collector
Pulse Range	0.1 - 200,000 gallons per pulse
Analog Option	4-20 mA, user-programmed span

WT102 (AO45 Blind Transmitter)

Output	4-20 mA
Loop Power	12 - 36 VDC (isolated)
Accuracy	± 1%
Response Time	3 sec., 95% FS

WT103 (Battery-powered Totalizer)

Total	6-digit, non-reset electro-mechanical
Battery Life	3 Years
Battery Type	Lithium, replaceable

WT104 (Battery-powered Rate/Totalizer)

Total	8 digit LCD
Rate	4-1/2 digit LCD
Battery	3V Lithium, 5 yrs. normal life

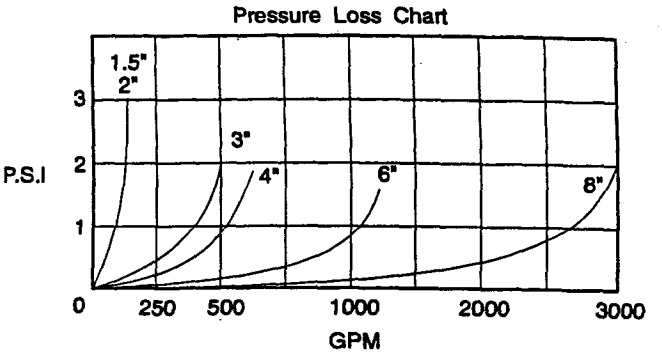

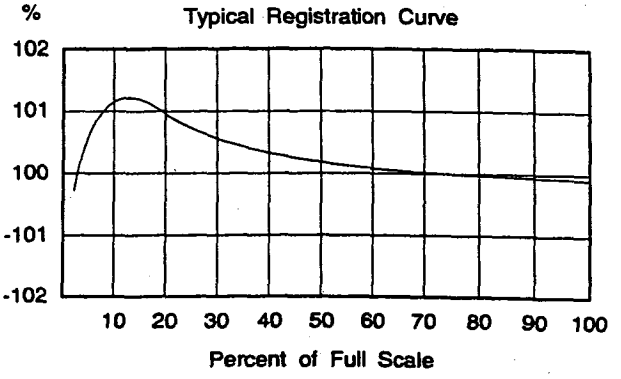

Dimensions

Meter size	Dimen. A
2"	10"
3"	12"
4"	14"
6"	18"
8"	20"

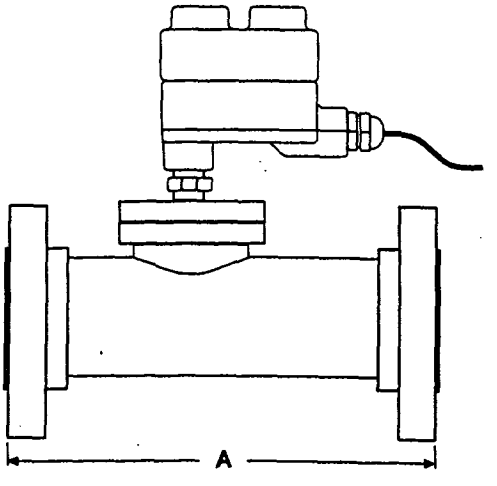

Installation

Piping Conditions. In general, the standard practice of installing the meter with ten diameters of straight pipe upstream and five downstream are recommended. However, it is possible under some circumstances to operate with less, particularly if the meter is equipped with an optional internal flow straightener.

Flanges. Standard flanges are 150 lb. ANSI drilling. Either partial or full-face gaskets can be used. When installing, tighten the bolts evenly, and use care to prevent a misaligned gasket from entering the flow stream.

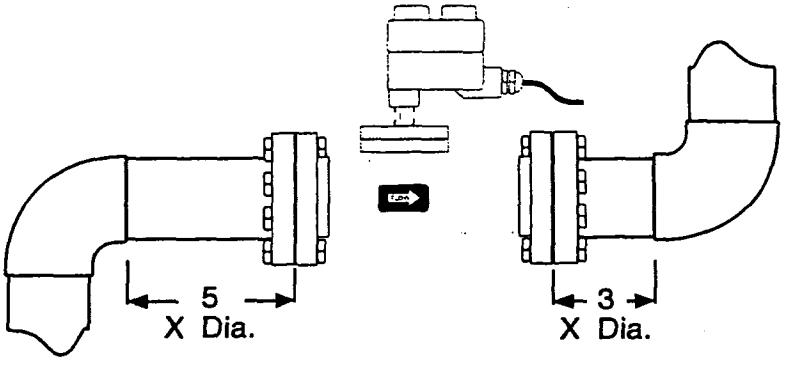

Position. The WT Series are all-position meters, and can be operated in a vertical or horizontal position, and with the meter insert in any radial position. A horizontal insert position is preferred if there is a risk of air becoming trapped due to constant low flows. Operating the meter in partially-filled pipe will result in inaccuracies.

Connections. Most WT meters require electrical connections. See the connections diagram for the one relevant to your meter.

Operation

For operating instructions for the various electronic modules, consult the manual for the specific module. This should be included with the meter when purchased.

Maintenance and Repair

Recalibration. If it is necessary to recalibrate the meter for any purpose, this can be done by any SeaMetrics-authorized facility. Call the factory for information.

Turbine Insert Removal and Installation. In order to repair any mechanical parts (rotor or shafts) it is necessary to remove the turbine insert. To do this, first remove all pressure from the line. Then remove the machine screws which hold the top flange in place. Lift off the flange with attached insert.

Rotor and Shaft Replacement. Examine the rotor to determine if bearings or shaft are damaged or excessively worn. The rotor should spin smoothly and freely, with no visible wobble. Back and forth play should be very minor, less than 1/64". If it is necessary to replace the rotor or shafts, first back out both shafts with a 3/32" Allen wrench. The rotor will come free as soon as the shaft ends come free of the rotor bearings. Reverse the procedure to reinstall. **Note:** Do not overtighten the shaft screws. Check to be sure that a small amount of free play between the shaft ends and the bearings remains.

Sensor Replacement. This procedure is rarely necessary. However, certain electrical conditions can damage the sensor. To replace it, first remove any electronics module in the aluminum electronics housing. Disconnect the sensor leads from terminals on the back of the board. Remove the strain relief or electronics housings, then remove the sensor by tugging gently on the sensor leads.

Electronic Module Repair. Except for the FT410 electronic register, none of the electronics modules have replaceable components. Printed circuit boards must be replaced as complete units. In order to replace an electronic module, loosen the four screws which fasten each unit to standoffs. Once the screws are loose, the unit will lift free from the insert housing.

The FT410 has a fuse holder and fuse on the back side of the board. To replace a fuse, remove the board stack and turn it over. Locate the fuse holder, then remove and replace the fuse.

Additional SeaMetrics Literature Available Through Your Local Distributor

Description	Publication Number
Product Catalog	19500-0496
Controls	
AC10 Analog Instructions	23018-0696
AD30 Specifications	S19560-0696
AD30 Instructions	19560-0696
AD36 Specifications	S19550-0796
AD36 Instructions	19550-0796
AO45 Specifications	S19386-0696
AO45 Instructions	19386-0696
FS20 Specifications	S19128-0696
FS20 Instructions	19128-0696
FT410 Specifications	S19740-0696
FT410 Instructions	19740-0696
FT500 Specifications	S19501-0696
FT500 Instructions	19501-0796
FT500B Specifications	S19096-0796
FT500B Instructions	19096-0796
FT500R Specifications	S19082-0796
FT500R Instructions	19082-0796
PD10 Specifications	S19140-0796
PD10 Instructions	19140-0796
PT32/PT33 Mounting Template	19001-0796
PT32/PT33 Specifications	S19125-0696
PT32/PT33 Instructions	19125-0696
PX12 Specifications	S19130-0796
PX12 Instructions	19130-0796
RT66 Specifications	S25971-0796
RT66 Instructions	25971-0796
Insertion Meters	
IP80 Series Specifications	S19200-0696
IP80 Series Instructions	19200-0696
IP101/201 Specifications	S19720-0796
IP101/201 Instructions	19720-0796
IP115/215 Specifications	S19850-0796
IP115/215 Instructions	19850-0796
M-Series Meters	
M-Series Specifications	S19085-0696
M-Series Instructions	19085-0696

Description	Publication Number
Turbine Meters	
WP Specifications	S19120-0696
WP Instructions	19120-0696
WT-C (carbon steel) Specifications	S19151-0796
WT-C (carbon steel) Instructions	19151-0796
WT-P (PVC) Specifications	S19093-0796
WT-P (PVC) Instructions	19093-0796
WT-S (stainless) Specifications	S19150-0796
WT-S (stainless) Instructions	19150-0696
WTX800 Series Specifications	S19730-0696
WTX800 Series Instructions	19730-0696
Low-Flow Meters	
SEB specifications	S19600-0796
SEB Instructions	19600-0796
S-Series Specifications	S19603-0696
S-Series Instructions	19603-0696
Technical Bulletins	
Connecting to PLC'S	TB-0001-1195
Miscellaneous	
Warranty Policy	25156-0696
EPROM Installation (FT500)	19103-0696

SeaMetrics
20419 80th Ave. So., Kent WA. 98032 USA
Phone: 206-872-0284 Fax: 206-872-0285

Set 4-20 mA Span. If the optional 4-20 mA board is installed, the prompt SET 20 mA will appear. Set this value to the flow rate, in units per minute, at which the full 20 mA output is desired. Zero flow will automatically be scaled to 4 mA.

Set Decimal Point. Pressing PROGRAM again brings up SET DP. Choices are one decimal place or none. Pressing the +/- keys alternates between the two. Typically, a decimal place is only required with low-flow meters. Exit programming mode. Pressing rate/totalizer button returns unit to operating state.

Operation

In normal operation the FT410 displays rate or total. Pressing RATE/TOTAL alternates from one to the other. This can also be accomplished from outside the unit by touching a magnet to the outside of the case in the general vicinity of the RATE/TOTAL key. When rate is showing, total continues to accumulate. Unless the unit has the NR (non-reset) option, pressing the RESET key sets total to zero. Total is stored in nonvolatile memory and is kept on loss of power, although the unit will not operate during the power outage.

Repair

The only field-repairable component on the FT410 is the fuse. The fuseholder is found on the back of the circuit board stack. Replace with a Littlefuse 3AG 1/2-Amp or equivalent automotive-type fuse.

On units with the 4-20 mA option, it is necessary to remove the analog board at the back of the stack to reach the fuse. Unplug the board by gently tugging on it. On some models, it is also necessary to remove four screws to get the analog board loose.

If failure is due to a cause other than a blown fuse, it is necessary to replace the entire board stack. Contact your distributor for information.

Mounting Dimensions

FT410W Wall Mount

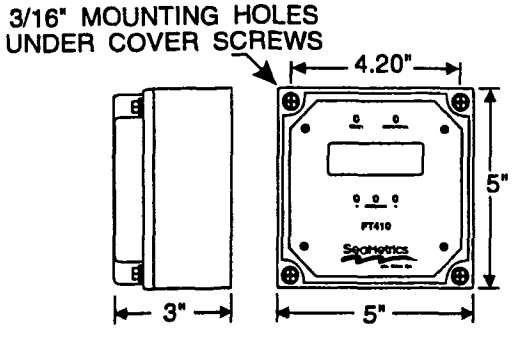

FT410P Panel Mount

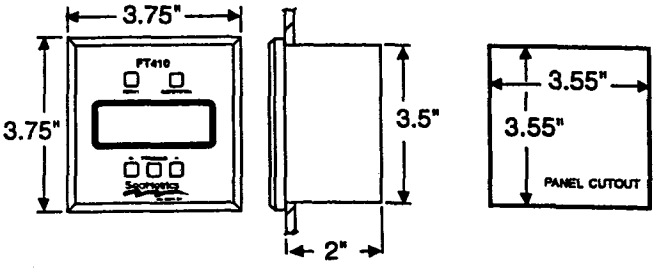

SeaMetrics
20419 80th Ave. So., Kent WA. 98032 USA
Phone: 253-872-0284 Fax: 253-872-0285

Standard Connections

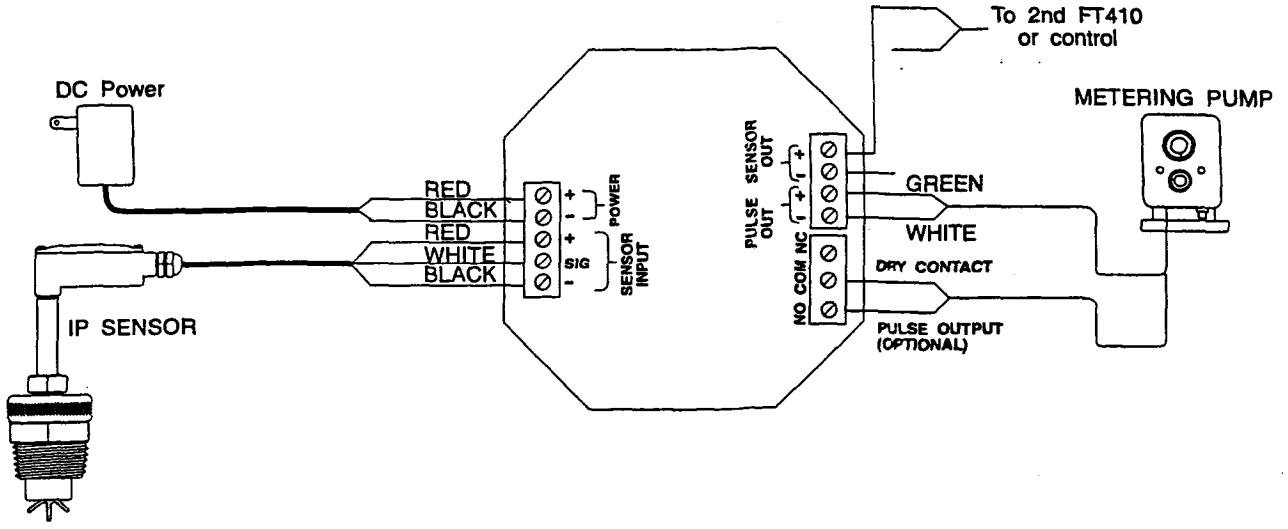

Analog output - Non-Isolated

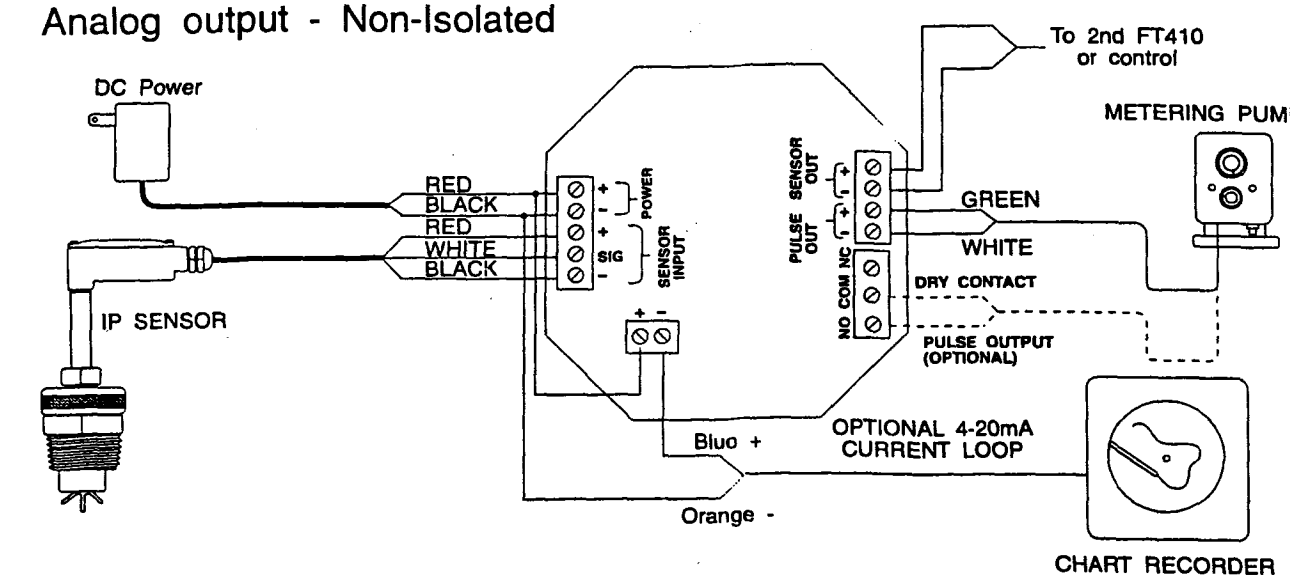

Analog output - Isolated

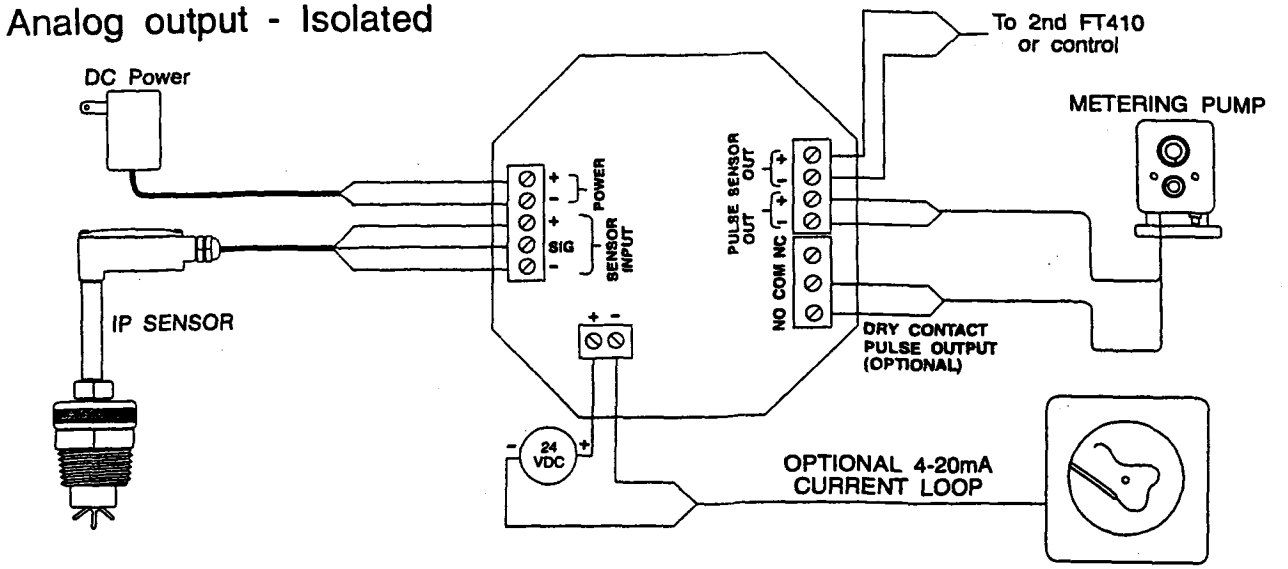

Installation

FT410W: Wall Mounting. Four 3/16" screw holes are located at the bottom of the front cover screw holes. Mark the locations through the holes, then drill. Slip screws down the holes and tighten.

FT410P: Panel Mounting. Use the dimensions on the back page for making the panel cutout. Locate the dovetail mounting bracket grooves on the side and the top of the unit. After cutting out the panel, break any sharp or rough edges, then slip the panel gasket in place behind the FT410 bezel and slide the unit through the panel hole. Install the mounting brackets in their dovetail grooves, with the slots of the clamping screws facing out. Tighten the screws to pull the unit tightly against the panel and compress the gasket slightly.

Connections

FT410M: This unit is pre-wired with 18 ft. of four-conductor cable. See diagram for color coding of the leads. If desired, the cable supplied can be removed, and connections can be made inside the unit, following the Connections diagram.

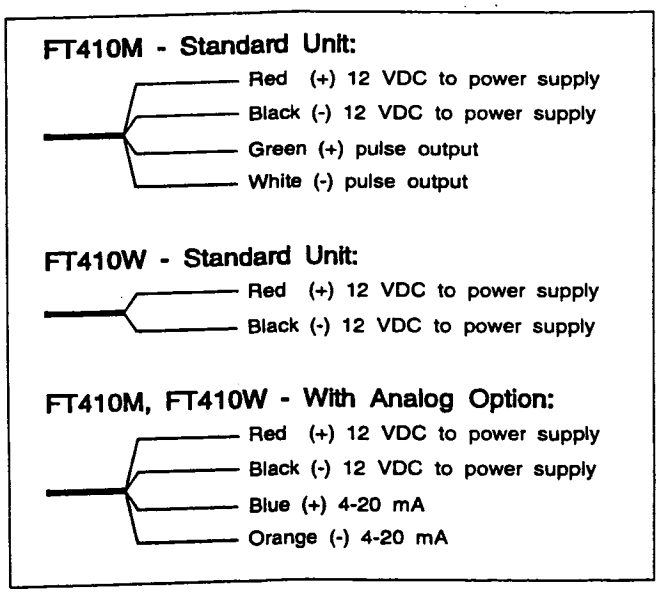

FT410W: This unit is pre-wired with 6 ft. of two-conductor cable for the power connections. See diagram for color coding of the leads. To complete the wiring needed for the application, remove the front clear cover, then remove the front panel to reach the terminals. Turn the front panel over, with the circuit boards still attached. Follow the connections diagram.

Note the polarity of the Pulse Output terminals. Be sure to observe proper polarity when connecting to an electronic metering pump. If the pump does not respond to the pulse output, try switching polarity.

Sensor Out terminals are provided for passing on the signal from a flow sensor to a second electronic device. They do no need to be connected unless using such a device.

FT410P: This unit is ordinarily supplied without pre-wiring. To reach the terminals, remove the four screws which hold the back cover of the housing in place. Follow the connections diagram

Analog Output Board. The optional 4-20 mA output uses a third printed circuit board which plugs into the terminal connection board. This board is pre-wired at the factory with a jumper, so that powering the FT410 automatically provides power to the current loop. If an isolated 4-20 mA output is required (see Connections) it is necessary to remove the jumper and rewire as shown in "Analog Output - Isolated".

Programming

Caution: If pulse output is being used to control an external device, such as a metering pump, do not connect the pulsed device until programming is completed. If malfunction or incorrect programming of the pulse output could cause personal injury or property damage, separate safeguards must be installed to prevent such injury or damage.

Set K-Factor. To begin programming, press the PROGRAM key. The prompt SET K should appear. The K-factor is the number of pulses per volume unit. This number is provided with SeaMetrics meters, in pulses per gallon. If the FT410 is to read in other units, the number provided with the meter must be converted. The FT410 will then totalize in the selected units, and the rate reading will be in those units per minute. The rate is always in units per minute.

To enter the K-factor, press the "+" or "-" keys until the desired number is reached.

Set Pulse Output. Pressing PROGRAM a second time brings up the prompt SET P. This setting controls the pulse output, if it is being used. It is set in units per pulse. For example, if the FT410 is reading in gallons, a setting of 2.00 means that a pulse will occur every 2 gallons. Settings may be as small as 0.1, which means that there is a pulse every 0.1 units. If the optional dry contact pulse output is present, SET P sets that pulse output also. (**NOTE:** *Pulse output is limited to 100 ppm*)

SeaMetrics

FT410 Flow Computer Instructions

General Information

The SeaMetrics FT410 is a compact digital flow monitor with user-programmed output features. Combined with an IP Series insertion flow sensor or a WT turbine meter, it is ideal for flow rate and total indication, chart recording, and proportional chemical feed. It is available in wall or panel-mount enclosures, or in a round cast-aluminum housing mounted directly on a SeaMetrics meter. For wall-mounting, the non-metallic enclosure is splashproof and has a clear cover. The housing for panel mounting is standard 1/4 DIN-sized, with gasketed front panel and membrane switches. Wall and meter-mounted enclosures are NEMA 4X; Panel-mounted enclosures are NEMA 12.

An eight-digit totalizer is resettable, unless ordered with non-reset option. Programming prompts simplify set up by indicating the next step. Pulse output is a programmable 0.1 second open-collector transistor pulse (an optional dry contact pulse output is available) which is compatible with electronic metering pumps, PLC's, computer input cards, and SeaMetrics controls. An optional 4-20 mA output feature is front-panel programmable in standard flow rate units.

Specifications

Power	11-28 VDC
Flow Sensor Power	5 Volts DC, 50 mA maximum
Temperature	0° C to 70° C
Display	Custom 8-digit LCD, 0.4" digits
Totalizer	8-digit resettable (non-reset optional)
Rate Indication	8-digit
K Factor Range	.050 - 2000.000
Pulse Output Range	0.1 - 200000.0 gallons per pulse
Pulse Output	0.1-second open-collector transistor, 100 mA, 40 VDC maximum; optional FORM C SPST relay contact closure 5A@ 24VDC
Analog Output (Optional)	4-20 mA isolated 24 VDC, 500 Ohm maximum; may be wired non-isolated
Analog Output Resolution	500 counts full scale
Sensor Output	100 mA, 40 VDC maximum

Features

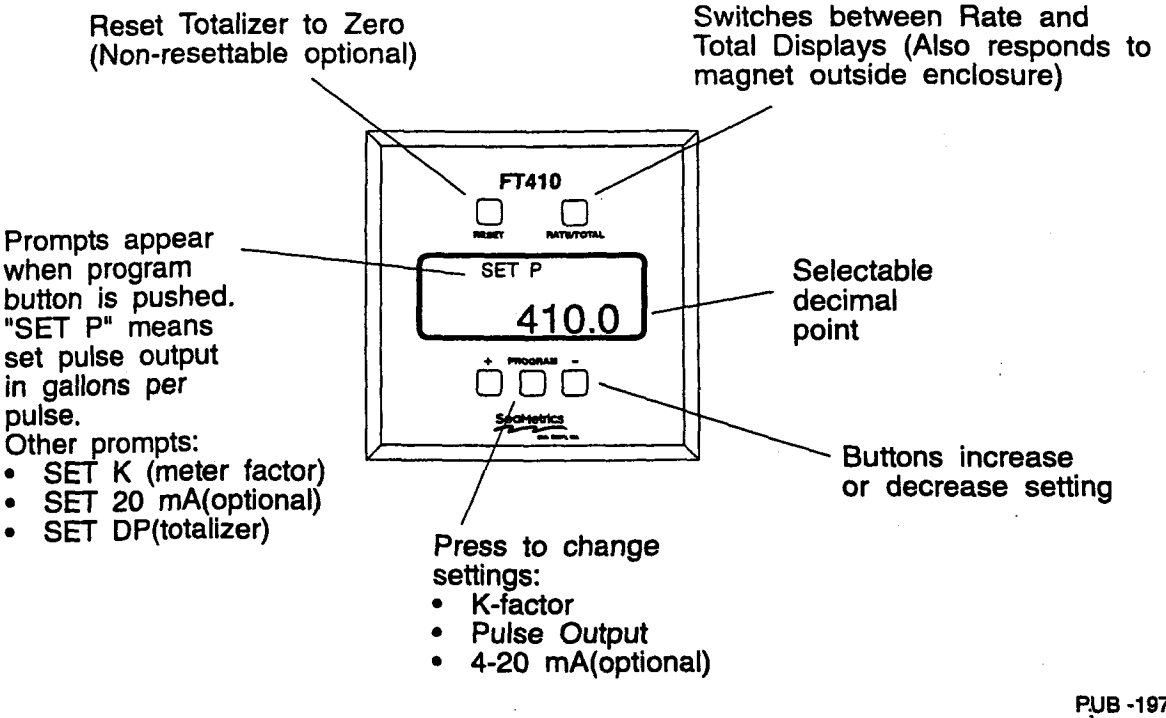

SeaMetrics, Inc.
Limited Warranty Policy
(effective July 15, 1995)

The limited warranty set forth below is given by SeaMetrics, Inc. ("SeaMetrics") with respect to SeaMetrics brand products purchased in the United States.

SeaMetrics products, when delivered to you in new condition in their original containers, are warranted against defects in materials or workmanship for a period of two (2) years from the date of original purchase.

Defective products, or parts thereof; which are returned to SeaMetrics and proven to be defective upon inspection, will be repaired to "like-new" status and returned to you. Warranty repair shall not extend the original warranty period of the SeaMetrics product. This limited warranty shall only apply if the products are used for their intended purpose: the measurement of flow in such liquids whose temperature, pressure, velocity, viscosity, density or chemical composition render them suitable to pass through the product, and the product is located in a non-hazardous area. This limited warranty covers all defects encountered in normal use of SeaMetrics' products, and does not apply in the following cases:

(a) Loss of or damage to SeaMetrics' product due to abuse, mishandling, improper packaging by you, alteration, accident, electrical current fluctuations, failure to follow operating, maintenance and environmental instructions prescribed in SeaMetrics' instruction manual, or service performed by other than SeaMetrics, or any SeaMetrics Authorized Service Facility which may be established separately from this limited warranty policy.
(b) Use of parts or supplies (other than those sold by SeaMetrics) which cause damage to the products, or cause abnormally frequent service calls or service problems.

NO IMPLIED WARRANTY, INCLUDING ANY IMPLIED WARRANTY OF MERCHANTABILITY OR FITNESS FOR A PARTICULAR PURPOSE, APPLIED TO THE PRODUCTS AFTER THE APPLICABLE PERIOD OF THE EXPRESS LIMITED WARRANTY STATED ABOVE, AND NO OTHER EXPRESS WARRANTY OR GUARANTY, EXCEPT AS MENTIONED ABOVE, GIVEN BY ANY PERSON OR ENTITY WITH RESPECT TO THE PRODUCTS, SHALL BIND SEAMETRICS. (SOME STATES DO NOT ALLOW LIMITATIONS ON HOW LONG AN IMPLIED WARRANTY LASTS, SO THE ABOVE LIMITATION MAY NOT APPLY TO YOU.) SEAMETRICS SHALL NOT BE LIABLE FOR LOSS OF REVENUES, OR PROFITS, OR INCONVENIENCE, EXPENSE FOR SUBSTITUTE EQUIPMENT OR SERVICE, STORAGE CHARGES, LOSS OF DATA, OR ANY OTHER SPECIAL, INCIDENTAL OR CONSEQUENTIAL DAMAGES CAUSED BY THE USE OR MISUSE OF, OR INABILITY TO USE, THE PRODUCTS, REGARDLESS OF THE LEGAL THEORY ON WHICH THE CLAIM IS BASED, AND EVEN IF SEAMETRICS HAS BEEN ADVISED OF THE POSSIBILITY OF SUCH DAMAGES. IN NO EVENT SHALL RECOVERY OF ANY KIND AGAINST SEAMETRICS BE GREATER IN AMOUNT THAN THE PURCHASE PRICE OF THE PRODUCT SOLD BY SEAMETRICS AND CAUSING THE ALLEGED DAMAGE. WITHOUT LIMITING THE FOREGOING, YOU ASSUME ALL RISK OF LIABILITY FOR LOSS, DAMAGE, OR INJURY TO YOU AND YOUR PROPERTY AND TO OTHERS AND THEIR PROPERTY ARISING OUT OF USE OR MISUSE OF, OR INABILITY TO USE, THE PRODUCTS NOT CAUSED DIRECTLY BY THE NEGLIGENCE OF SEAMETRICS. (SOME STATES DO NOT ALLOW THE EXCLUSION OR LIMITATION OF INCIDENTAL OR CONSEQUENTIAL DAMAGES, SO THE ABOVE EXCLUSION OR LIMITATION MAY NOT APPLY TO YOU.) THIS LIMITED WARRANTY STATES YOUR EXCLUSIVE REMEDY.

You must contact SeaMetrics for an RMA (Return Material Authorization) number, and **properly** package and send the product to SeaMetrics at your expense, together with a complete explanation of the problem and your product's model name, serial number, and date of purchase. SeaMetrics products covered by this warranty will be repaired and returned to you without charge by SeaMetrics. Expedited repair and return may be subject to service charges.

OUT-OF-WARRANTY SERVICE

The following applies to factory service on SeaMetrics products which are either out of warranty, or which have been determined to be suffering from non-warranty damage. You must contact SeaMetrics to arrange for out-of-warranty factory service and obtain an RMA number. You must **properly** package and send the product to SeaMetrics at your expense, together with a complete explanation of the problem and our product's model name, serial number, and date of purchase. SeaMetrics products not covered by this warranty will be repaired and returned to you by SeaMetrics for a flat rate charge, established separately from this limited warranty policy. Expedited repair and return may be subject to service charges. SeaMetrics may elect to substitute a reconditioned to "like new" product of the same or equivalent model. The warranty period covering such repaired or replaced products shall be ninety (90) days from the date the product is shipped to you from SeaMetrics.

This limited warranty gives you specific legal rights and you may also have other rights which vary from state to state.

P.O. Box 1589 Kent WA. 98035 Phone: (253)872-0284 Fax: (253)872-0285 email: seametrics@aol.com

SeaMetrics

Flow Meters and Controls

March 17, 1998

To: Paula @ Court & Thomas Co./Hayward
From: Walt Boyes

Subject: Buy-American Act Certification

Dear Paula:

This is to certify that the WTS line of Stainless Steel Turbine Flow Meters comply with the Buy-American Act and are "Made in USA." At least 70% of the materials and/or labor involved in the manufacture of these Flow Meters originates in the United States. Manufacture of subassemblies, circuit boards, sensors, and final assembly and test are conducted at our facility in Kent, WA.

Please let me know if you have any questions or need further information.

Yours sincerely,
SeaMetrics Inc.

Walt Boyes
Director of Marketing

SeaMetrics Incorporated • P.O. Box 1569, Kent, WA 98035 USA • Phone: 253-872-0284 • Fax 253-872-0285 • URL: www.seametrics.com
International Sales Division: Partners for International Development • P.O. Box 22428, Houston, TX 77227 USA • Phone: 713-960-0782 • Fax 713-960-8947 or 713-524-0393

PACKING LIST

COURT & THOMAS COMPANY, INC.

PAGE: 1

P.O. BOX 471
5482 ARROW HIGHWAY
MONTCLAIR, CA 91763
909-982-1377 FAX 909-985-0636

30998 HUNTWOOD AVE., SUITE 105
HAYWARD, CA 94544
PH. 510-487-5310 FAX 510-487-5137

ORDER DATE: 03/16/98

ORDER NUMBER: 0056320
CUSTOMER NO: 00-0001790

SALESMAN: BS

SOLD TO:
I.T. CORP.
4585 PACHECO BOULEVARD

MARTINEZ CA 94553

SHIP TO:
I.T. CORP.
4585 PACHECO BOULEVARD

MARTINEZ CA 94553

STOMER P.O.	SHIP VIA	F.O.B	TERMS
37497-80	UPS - GND	MONTCLAIR	Net 30 Days

EM NO.	DESCRIPTION	ORDERED	SHIPPED	BACK ORD-
S101-200	SEAMETRICS 2"304SS TURBINE M	1	1	—
SERIAL NOs: 03980707				
TION-19	SEAM ANALOG OUTPUT FT410/WT1	1	1	—
SERIAL NOs:				
TION-20	SEAMETRICS FLANGED ENDS WTS	1	1	—
SERIAL NOs:				
-2	ARO 2" VITON FLANGE GASKET	2	2	—
ERIAL NOs:				

INSTALL OPTIONS ON METER

SHIP WITHIN 2 WEEKS
PARTIAL OKAY

GOV'T. PROPERTY
6PCS

HIP DATE: 3-26-98

19920

RDERED BY: CHRIS ALLEN
HONE: (510) 372-9100

CHECKED BY: E.P

FE,FQ,FI-***RD-T-5/8 x 3

Size 5/8" x 3/4"

Recordall® Cold Water Bronze Disc Meter

Badger Meter
Utility Division

TECHNICAL BRIEF

Contract # _____

Transmittal # _____

Item # _____

Project _____

Subcontractor _____

Manufacturer _____

Supplier _____

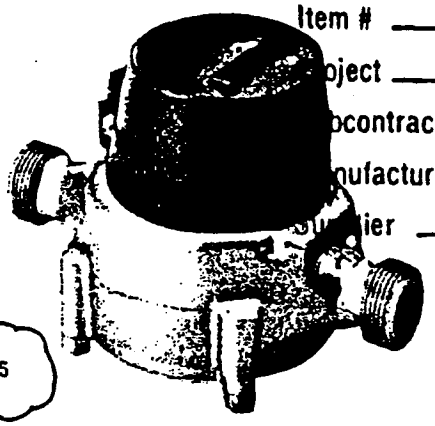

Model 25

SPECIFICATIONS

Typical Operating Range (100% ±1.5%)	M25 1/2-25 GPM (1.9 to 95 l/m)
Low Flow Registration	M25 1/4 GPM (1.0 l/m)
Maximum Continuous Operation	M25 15 GPM (57 l/m)
Pressure Loss at Maximum Continuous Operation	M25 4 PSI at 15 GPM (57 l/m)
Maximum Operating Temperature	80°F (26°C)
Measuring Element	Nutating disc, positive displacement
Register Type	Straight reading, hermetically-sealed magnetic drive standard. Remote reading or Automatic Meter Reading units optional.
Register Capacity	M25 10,000,000 Gallons, 1,000,000 Cubic Feet, 100,000 m³. 6 odometer wheels.
Meter Connections	Available in bronze and thermoplastic to fit 3/4" spud thread bore diameter sizes, see table below.

METER SPUD AND CONNECTION SIZES

Size Designation	x	"L" Laying Length	"B" Bore Dia.	Coupling Nut and Spud Thread	Tailpiece Pipe Thread (NPT)
5/8" x 3/4"	x	7½"	5/8", 3/4"	1" (3/4")	3/4"

MATERIALS

Meter Housing	Cast Bronze
Housing Bottom Plates	Bronze, Cast Iron, Thermoplastic
Measuring Chamber	Thermoplastic
Disc	Thermoplastic
Trim	Stainless Steel, Bronze
Strainer	Thermoplastic
Disc Spindle	Stainless Steel
Magnet	Ceramic
Magnet Spindle	Stainless Steel
Register Cover	Thermoplastic, Bronze
Generator Housing	Thermoplastic

DESCRIPTION

APPLICATIONS: For use in measurement of potable cold water in residential, commercial, and industrial services where flow is in one direction only.

OPERATION: Water flows through the meter's strainer and into the measuring chamber where it causes the disc to nutate. The disc, which moves freely, nutates on its own ball, guided by a thrust roller. A drive magnet transmits the motion of the disc to a follower magnet located within the hermetically sealed register. The follower magnet is connected to the register gear train. The gear train reduces the disc nutations into volume totalization units displayed on the register dial face.

OPERATING PERFORMANCE: Badger Recordall Disc meters meet or exceed registration accuracy for low flow rates (95%), normal operating flow rates (100 ± 1.5%), and maximum continuous operation flow rates as specifically stated by AWWA Standard C700.

CONSTRUCTION: Badger Recordall Disc meter construction, which complies with ANSI/AWWA standard C700, consists of three basic components: meter housing, measuring chamber, and permanently, hermetically-sealed register. The water meter is bronze with externally-threaded spuds. A corrosion-resistant thermoplastic material is used for the measuring chamber.

To simplify maintenance, the register, measuring chamber, and strainer can be replaced without removing the meter from the installation. No change gears are required for accuracy calibration. Interchangeability of parts among like-sized meters also minimizes spare parts inventory investment.

MAGNETIC DRIVE: Direct magnetic drive, through the use of high-strength magnets, provides positive, reliable, and dependable register coupling for straight-reading, remote, or automatic meter reading options.

SEALED REGISTER: The standard register consists of a straight-reading, odometer-type totalization display, 360° test circle with center sweep hand, and flow finder to detect leaks. Register gearing consists of self-lubricating thermoplastic gears to minimize friction and provides long life. Permanently sealed; dirt, moisture, tampering, and lens fogging problems are eliminated. Multi-position register simplifies meter installation and reading. Generator-type remote reading and automatic meter reading systems are available for all Recordall Disc meters. (See back of sheet for additional information.) All reading options are removable from the meter without disrupting water service.

TAMPER-PROOF FEATURES: Customer removal of the register to obtain free water can be prevented when the optional tamper detection seal wire and/or breakaway head seal screw is added to the meter. Both can be installed at the meter site or at the factory.

MAINTENANCE: Badger Recordall Disc meters are designed and manufactured to provide long-term service with minimal maintenance. When maintenance is required, it can be performed easily either at the meter installation or at any other convenient location. As an alternative to repair by the utility, Badger offers various maintenance and meter component exchange programs to fit the needs of the utility.

CONNECTIONS: Tailpieces/Unions for installations of meters on various pipe types and sizes, including misaligned pipes, are available as an option.

Remote/Automatic Meter Reading Systems

Remote Reading

The Badger ROM system generates and transmits an electrical pulse up to 5000 feet, from the meter to a remote totalizer register without use of external power. See reference chart ROM-I-3. The generator which [illegible]porates a test circle and odometer-type totalizer is submersible. [illegible]mote register design permits resetting to any desired reading in [illegible]d and can be sealed to prevent tampering. See Bulletin ROM-T-5 for detail.

Automatic Meter Reading

The ACCESSplus® System is an automatic meter data retrieval and information management system. The ACCESSplus Integral Module attaches directly to the Recordall Disc meter. The ACCESSplus Remote Module can be connected to a High Resolution Transmitter or a currently installed generator. A complete turnkey system including computer hardware and software, the ACCESSplus System provides a wide range of meter information. See Bulletin AP-T-13 for details.

PRESSURE LOSS CHART

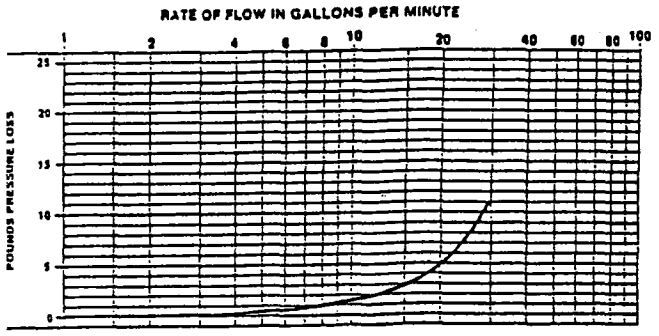

ACCURACY CHART

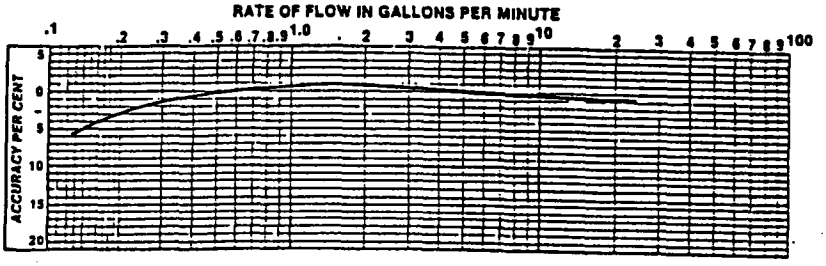

METER SIZE	METER MODEL	A LAYING LENGTH	B HEIGHT REG.	C HEIGHT GEN./HRT	D CENTERLINE TO BASE	WIDTH	APPROX. SHIPPING WEIGHT
5/8 × 3/4" (16mm)	25	7½" (190mm)	4 15/16" (125mm)	6 5/16" (160mm)	1 11/16" (42mm)	4¼" (108mm)	4½ lb. (2.0kg)

Sweep Hand Registration

MODEL	GALLON	CU. FT.	CU. METER
M25	10	1	.1/.01

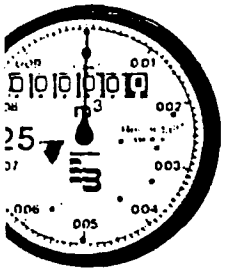

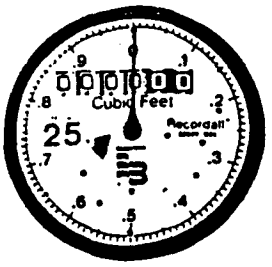

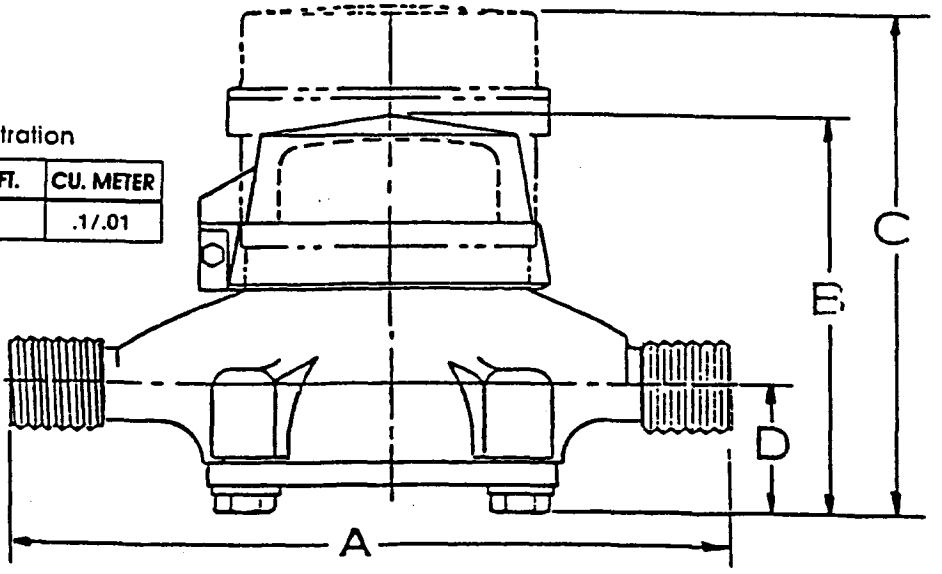

orthern Region
545 West Brown Deer Road
.O. Box 23099
lilwaukee, WI 53223-0099
114) 355-0400
: 355-3653

outhern Region
O. Box 814149
allas, TX 75381-4149
214) 416-3525
ax: (214) 416-7993

Eastern Region
Suite 211
5301 Limestone Road
Wilmington, DE 19808
(302) 239-9307
Fax: (302) 239-9364

Western Region
1318 Redwood Way, Suite 104
Petaluma, CA 94954
(707) 664-8740
Fax: (707) 664-8264

Badger Meter, Inc. Utility Division
P.O. Box 23099, Milwaukee, WI 53223-0099
Fax: (414) 355-2544

l rights reserved, all data subject to change without notice. Badger Meter, Inc. 1991

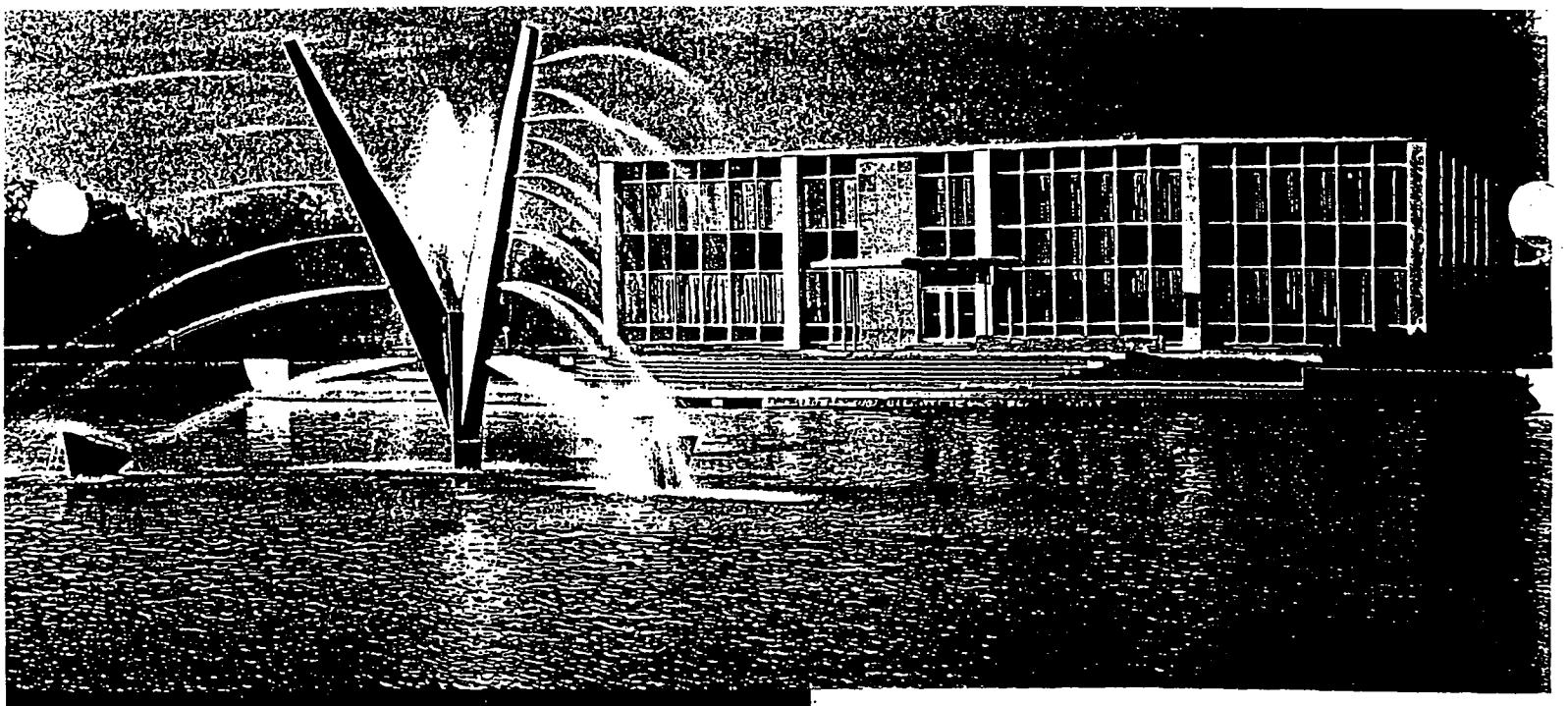

BADGER METER, INC.

Founded in 1905, Badger Meter has earned an international reputation as a leader in the development of flow-measurement technology. This reputation is supported by a commitment to quality and a tradition of superior service. What does this mean for our utility owners? It means:

- An ongoing emphasis on improvement and innovation which results in the development of new technologies and products to meet changing customer needs.
- A full line of products designed to solve the flow measurement problems of utilities regardless of size or location.
- A product warranty that is one of the best in the industry, underscoring our emphasis on quality and confidence in the products we offer our customers.
- A skilled workforce which recognizes that service means building long-term customer relationships through personal attention and follow-up in every area—from sales through technical support, trouble-shooting and delivery of replacement parts.

Technology. Products. Quality. Service. Four key reasons why Badger Meter is positioned to meet the flow measurement needs of utilities—today and into the next century.

REGIONAL SALES OFFICES

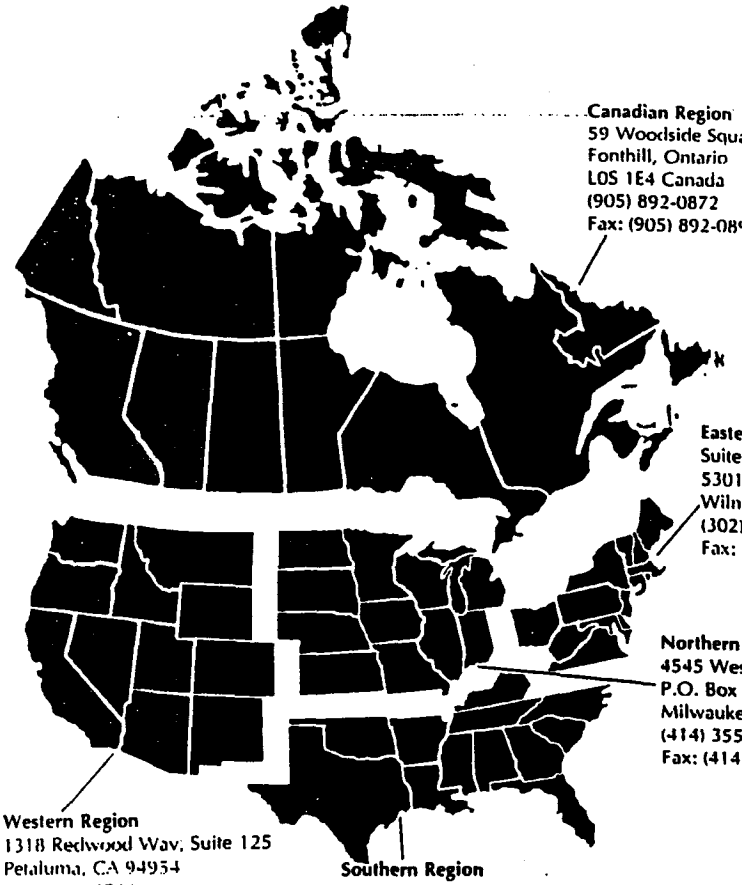

Canadian Region
59 Woodside Square
Fonthill, Ontario
L0S 1E4 Canada
(905) 892-0872
Fax: (905) 892-0898

Eastern Region
Suite 211
5301 Limestone Road
Wilmington, DE 198
(302) 239-9307
Fax: (302) 239-9364

Northern Region
4545 West Brown Deer R
P.O. Box 23099
Milwaukee, WI 53223-0
(414) 355-0400
Fax: (414) 355-3653

Western Region
1318 Redwood Way, Suite 125
Petaluma, CA 94954
(707) 664-8740
Fax: 707 664-8254

Southern Region
P.O. Box 814149
Dallas, TX 75381-4149
(214) 416-3525
Fax: (214) 416-7993

Member AWWA, AMRA and NRWA. **An independently owned American company.**

Badger Meter, Inc./Utility Division 4545 W. Brown Deer Road, P.O. Box 23099, Milwaukee, WI 53223-0099

LIMITED WARRANTY

Products manufactured by GRUNDFOS are warranted to the original user only to be free of defects in material and workmanship for a period of 18 months from date of installation, but not more than 24 months from date of manufacture. GRUNDFOS' liability under this warranty shall be limited to repairing or replacing at GRUNDFOS' option, without charge, F.O.B. GRUNDFOS factory or authorized service station, any product of GRUNDFOS manufacture. GRUNDFOS will not be liable for any costs of removal, installation, transportation, or any other charges which may arise in connection with a warranty claim. Products which are sold but not manufactured by GRUNDFOS are subject to the warranty provided by the manufacturer of said products and not by GRUNDFOS' warranty. GRUNDFOS will not be liable for damage or wear to products caused by abnormal operating conditions, accident, abuse, misuse, unauthorized alteration or repair, or if the product was not installed in accordance with GRUNDFOS printed installation and operating instructions.

To obtain service under this warranty, the defective product must be returned to the distributor or dealer of GRUNDFOS products from which it was purchased together with proof of purchase and installation date, failure date, and supporting installation data. Unless otherwise provided, the distributor or dealer will contact GRUNDFOS or an authorized service station for instructions. Any defective product to be returned to GRUNDFOS or a service station must be sent freight prepaid; documentation supporting the warranty claim and/or a Return Material Authorization must be included if so instructed.

MANUFACTURER WILL NOT BE LIABLE FOR ANY INCIDENTAL OR CONSEQUENTIAL DAMAGES, LOSSES, OR EXPENSES ARISING FROM INSTALLATION, USE, OR ANY OTHER CAUSES. THERE ARE NO EXPRESS OR IMPLIED WARRANTIES, INCLUDING MERCHANTABILITY OR FITNESS FOR A PARTICULAR PURPOSE, WHICH EXTEND BEYOND THOSE WARRANTIES DESCRIBED OR REFERRED TO ABOVE.

Some jurisdictions do not allow the exclusion or limitation of incidental or consequential damages and some jurisdictions do not allow limitations on how long implied warranties may last. Therefore, the above limitations or exclusions may not apply to you. This warranty gives you specific legal rights and you may also have other rights which vary from jurisdiction to jurisdiction.

GRUNDFOS®

Leaders in Pump Technology

Grundfos Pumps Corporation • 2555 Clovis Ave. • Clovis, CA 93612
Area Centers: Allentown, PA • Atlanta, GA • Chicago, IL • Clovis, CA • Seattle, WA • Dallas, TX
Phone: (800) 333-1366 • **Fax:** (800) 333-1363
Canada: Mississauga, Ontario • **Mexico:** Apodaca, N.L.

L-SP-TL-048 | Rev. 5/96

SP4"

Installation and Operating Instructions

4-Inch Stainless Steel Submersible Pumps

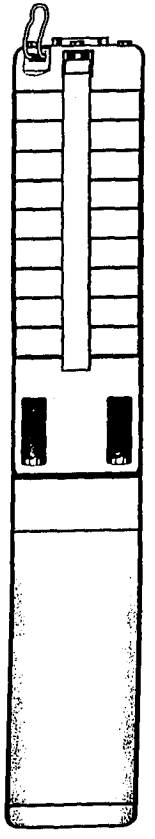

Please leave these instructions with the pump for future reference

GRUNDFOS®

SAFETY WARNING

Electrical Work

WARNING: Reduced risk of electric shock during operation of this pump requires the provision of acceptable grounding. If the means of connection to the supply connected box is other than grounded metal conduit, ground the pump back to the service by connecting a copper conductor (at least the size of the circuit supplying the pump) to the grounding screw provided within the wiring compartment.

Pre-Installation Checklist

1. Well Preparation

If the pump is to be installed in a new well then the well should be fully developed and bailed or blown free of cuttings and sand. The stainless steel construction of the GRUNDFOS submersibles makes it resistant to abrasion; however, no pump made of any material can forever withstand the destructive wear that occurs when constantly pumping sandy water.
If this pump is used to replace an oil-filled submersible or oil-lubricated line-shaft turbine in an existing well, the well must be blown or bailed clear of oil.

2. Make Sure You Have the Right Pump

Determine the maximum depth of the well, and the drawdown level at the pump's maximum capacity. Pump selection and setting depth should be made based on this data.

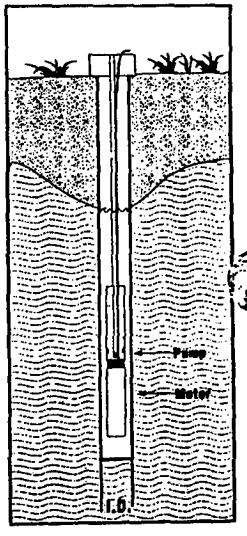

3. Pumped Fluid Requirements

Submersible well pumps are designed for pumping clear, cold water; free of air or gases. Decreased pump performance and life expectancy can occur if the water is not clear, cold or contains air or gases. Water temperature should not exceed 102°F.

A check should be made to ensure that the installation depth of the pump will always be at least three feet below the maximum drawdown level of the well. The bottom of the motor should never be installed lower than the top the screen or within five feet of the well bottom.

Ensure that the requirement for minimum flow past the motor is met, as shown in the table below:

Minimum Water Flow Requirements for Franklin 4-Inch Submersible Pump Motors

Minimum Diameter	Casing or Sleeve I.D. in Inches	Min. GPM Flow Passing the Motor
4-Inch	4	1.2
	5	7
	6	13
	7	21
	8	30

NOTES:

a. For Franklin Motors Only: A flow inducer or sleeve must be used if the water enters the well above the motor or if there is insufficient water flow past the motor.
b. For Franklin Motors Only: The minimum water velocity over 4" motors is 0.25feet per second.
c. Grundfos 4" submersible motors do not require a minimum flow or flow sleeve.

Pre-Installation Checklist

4. Splicing the Motor Cable

If the splice is carefully made, it will be as efficient as any other portion of the cable, and will be completely watertight. There are a number of cable splicing kits available today - epoxy filled, rubber-sealed and so on. Many perform well if the manufacturer's directions are followed carefully. If one of these kits is not used, we recommend the following method for splicing the motor cable:

Examine the motor cable and drop cable carefully for damage. Cut the motor leads off in a staggered manner. Cut the ends of the drop cable so that the ends match up with the motor leads. Be sure to match the colors. Strip back and trim off one-half inch of insulation from each lead, making sure to scrape the wire bare to obtain a good connection. Be careful not to damage the copper conductor when stripping off the insulation. Insert a properly sized Sta-Kon-type connector on each pair of leads, again making sure that colors are matched. Using Sta-Kon crimping pliers, indent the lugs. Be sure to squeeze down hard on the pliers, particularly when using large cable. Form a piece of electrical insulation putty tightly around each Sta-Kon. The putty should overlap on the insulation of the wire. Use a good quality tape such as ***#33 Scotch Waterproof*** **or** ***Plymouth Rubber Company Slipknot Grey.*** Wrap each wire and joint tightly for a distance of about 2½" inches on each side of the joint. Make a minimum of four passes over each joint and overlap each pass approximately one inch to assure a completely watertight seal.

Installation Procedures

1. Attach the Safety Hook to the Pump

Connect the safety hook to the pump using pliers to squeeze the sides of the hook so it fits into the slot in the pump.

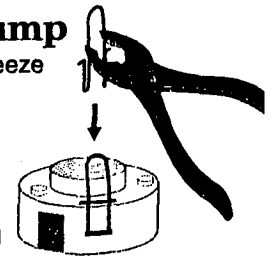

2. Attach the Pump to the Pipe

A back-up wrench should be used when riser pipe is attached to the pump. The pump should only be gripped by the flats on the top of the discharge chamber. Under no circumstances grip the body of the pump, cable guard or motor.
When tightened down, the threaded end of the first section of the riser pipe or the nipple must not come in contact with the check valve retainer in the discharge chamber of the pump. After the first section of the riser pipe has been attached to the pump, the lifting cable or elevator should be clamped to the pipe. Do not clamp the pump. When raising the pump and riser section, be careful not to place bending stress on the pump by picking it up by the pump-end only. It is recommended that plastic-type riser pipe be used only with the smaller domestic submersibles. The manufacturer or representative should be contacted to ensure the pipe type and physical characteristics are suitable for this use. Use the correct joint compound recommended by the specific pipe manufacturer. Besides making sure that joints are fastened, we recommend the use of a torque arrestor when using plastic pipe.

(continued on next page)

Do not connect the first plastic riser section directly to the pump. Always attach a metallic nipple or adapter into the discharge chamber. The threaded end of the nipple or adapter must not come in contact with the check valve retainer in the discharge chamber when tightened down.

3. Lower the Pump Into the Well

Make sure the electrical cables are not cut or damaged in any way when the pump is being lowered in the well. Do not use the power cables to support the weight of the pump.

To protect against surface water entering the well and contaminating the water source, the well should be finished off above grade utilizing a locally approved well seal or pitless adaptor unit. We recommend that steel riser pipes always be used with the larger submersibles. A pipe thread compound should be used on all joints. Make sure that the joints are adequately tightened in order to resist the tendency of the motor to loosen the joints when stopping and starting.

The drop cable should be secured to the riser pipe at frequent intervals to prevent sagging, looping and possible cable damage. Nylon cable clips or waterproof tape may be used. The cable splice should be protected by securing it with clips or tape just above each joint.

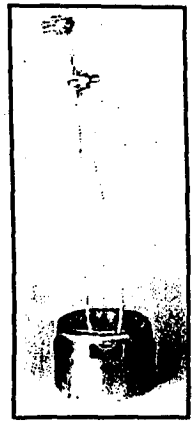

Fig.1

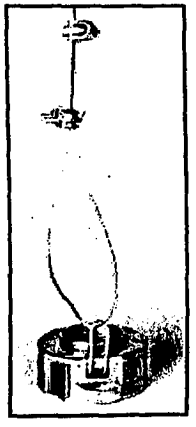

Fig.2

IMPORTANT: *Plastic pipe tends to stretch under load. This stretching must be taken into account when securing the cable to the riser pipe. Leave three to four inches of slack between clips or taped points. This tendency for plastic pipe to stretch will also affect the calculation of the pump setting depth. As a general rule, you can estimate that plastic pipe will stretch to approximately 2% of its length. When plastic riser pipe is used, it is recommended that a safety cable be attached to the pump to lower and raise it. The discharge chamber of GRUNDFOS 4-inch submersibles is designed to accommodate this cable.*

(See Figures 1 & 2)

Check Valves: A check valve should always be installed at the surface of the well and one at a max. of 25' above static water level. In addition, for installations deeper than 200 feet, check valves should be installed at no more than 200 foot intervals.

4. Electrical Connections

WARNING: Reduced risk of electric shock during operation of this pump requires the provision of acceptable grounding. If the means of connection to the supply connected box is other than grounded metal conduit, ground the pump back to the service by connecting a copper conductor (at least the size of the circuit supplying the pump) to the grounding screw provided within the wiring compartment.

Verification of the electrical supply should be made to ensure the voltage, phase and frequency match that of the motor. Motor electrical data can be found on page 6. If voltage variations are larger than ± 10%, do not operate the pump. Single-phase motor control boxes should be connected as shown on the wiring diagram mounted on the inside cover of the control box supplied with the motor. The type of wire used between the pump control boxes should be approved for submersible pump application. The conductor insulation should be type RW, RUW, TW or equivalent.

A high-voltage surge arrestor should be used to protect the motor against lightning and switching surges. Lightning voltage surges in power lines are caused when lightning strikes somewhere in the area. Switching surges are caused by the opening and closing of switches on the main high-voltage distribution power lines.

The correct voltage-rated surge arrestor should be installed on the supply (line) side of the control box or starter (see Figure 3a & 3b). The arrestor must be grounded in accordance with the National Electric Code and local governing regulations.

PUMPS SHOULD NEVER BE STARTED UNLESS THE PUMP IS TOTALLY SUBMERGED. SEVERE DAMAGE MAY BE CAUSED TO THE PUMP AND MOTOR IF THEY ARE RUN DRY.

The control box shall be permanently grounded in accordance with the National Electric Code and local governing codes or regulations. The ground wire should be a bare stranded copper conductor at least the same size as the drop cable wire size. Ground wire should be as short a distance as possible and securely fastened to a true grounding point. True grounding points are considered to be: a grounding rod driven into the water strata; steel well casing submerged into the water lower than the pump setting level; and steel discharge pipes without insulating couplings. If plastic discharge pipe and well casing are used, a properly sized bare copper wire should be connected to a stud on the motor and run to the control panel. Do not ground to a gas supply line. Connect the grounding wire to the ground point first, then to the terminal in the control box.

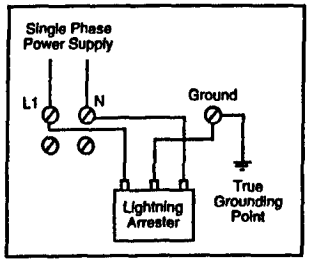

Fig.3a

Single Phase Hookup

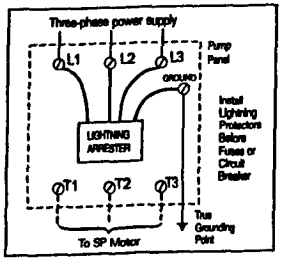

Fig.3b

Three Phase Hookup

Single-Phase 2-Wire Wiring Diagram for Submersible Motors

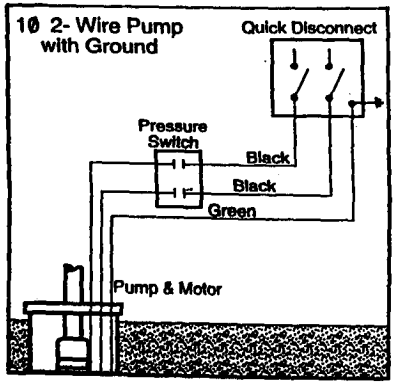

Fig.4

Three-Phase Wiring Diagram for Submersible Motors

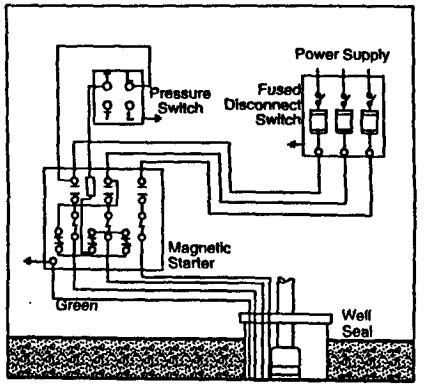

Fig.5

Single-Phase 3-Wire Control Box for Submersible Motors

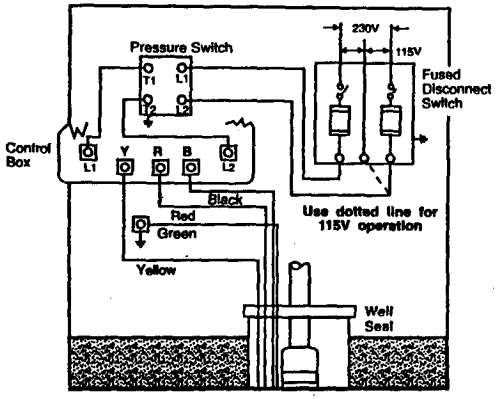

Fig.6

5. Starting the Pump for the First Time

A. Attach a temporary horizontal length of pipe to the riser pipe.
B. Install a gate valve and another short length of pipe to the temporary pipe.
C. Adjust the gate valve one-third of the way open.
D. Verify that the electrical connections are in accordance with the wiring diagram.
E. After proper rotation has been checked, start the pump and let it operate until the water runs clear of sand, silt and other impurities.
F. Slowly open the valve in small increments as the water clears until the valve is all the way open. The pump should not be stopped until the water runs clear.
G. If the water is clean and clear when the pump is first started, the valve should still be opened until it is all the way open.

HP	Ph	VOLT	Ser. Fact.	Circ. Brk. or Stnd. Fuse	Dual Element Fuse	AMPERAGE Full Load	AMPERAGE Lock Rotor	AMPERAGE S.F. Amps	FULL LOAD Eff.	FULL LOAD Power Factor	Line-to-Line Resistance(Ohms) Delta	KVA Code **	Max. Thrust (lbs)
Grundfos 4 Inch (Two-Wire) Motors 60 Hz													
SINGLE-PHASE													
1/3	1	230	1.75	15	5	3.4	25.7	4.6	59.0	77.0	6.3-7.6	S	750
1/2	1	230	1.60	15	7	4.55	34.5	6.0	62.0	76.0	4.0-4.7	R	750
3/4	1	230	1.50	20	9	6.9	40.5	8.4	62.0	75.0	3.1-3.7	N	750
1	1	230	1.40	25	12	8.0	48.4	9.8	63.0	82.0	2.6-3.1	M	750
1 1/2	1	230	1.30	35	15	10.0	62.0	13.1	64.0	85.0	2.0-2.3	L	750

Grundfos 4 Inch (Three-Wire*) Motors

SINGLE-PHASE											Blk-Yel / Red-Yel		
1/3	1	230	1.75	15	5	3.4	14.0	4.6	59.0	77.0	6.3-7.6/17.0-20.6	L	750
1/2	1	230	1.60	15	7	4.55	21.5	6.0	62.0	76.0	3.8-4.6/15.9-19.3	L	750
3/4	1	230	1.50	20	9	6.9	31.4	8.4	62.0	75.0	3.1-3.6/13.5-16.5	L	750
1	1	230	1.40	25	12	8.0	37.0	9.8	63.0	82.0	2.6-3.2/ 9.9-12.1	K	750
1 1/2	1	230	1.30	30	15	9.4	45.9	11.6	69.0	89.0	2.0-2.4/ 8.3-10.0	H	750
THREE-PHASE											Three Phase Overload Protection: Starter Size / Furnas Amb. Comp.	Line to Line Resist. (Ohms)	
1.5	3	230	1.25	20	10	5.6	40.3	7.3	75.0	72.0	0 K42	3.25	M 750
		460	1.30	10	5	2.8	20.1	3.65	75.0	72.0	00 K32	12.3	M 750
		575	1.30	8	4	2.2	16.1	2.9	75.0	72.0	00 K29	21.5	M 750
2	3	230	1.25	25	10	7.0	48.0	8.7	76.0	75.0	0 K49	2.25	L 750
		460	1.25	12	6	3.5	24.0	4.35	76.0	75.0	0 K34	9.2	L 750
		575	1.25	10	5	2.8	19.2	3.5	76.0	75.0	00 K32	13.8	L 750
3	3	230	1.15	30	15	9.6	51.0	11.2	68.5	83.8	0 K54	2.2	H 1000
		460	1.15	15	7	4.8	25.5	5.6	68.5	83.8	0 K37	9.0	H 1000
		575	1.15	15	6	3.8	20.4	4.5	68.5	83.8	0 K36	13.0	H 1000
5	3	230	1.15	40	25	15.2	89	17.8	71.9	80.0	1 K61	1.2	H 1000
		460	1.15	20	12	7.6	45	8.9	71.9	80.0	0 K50	5.0	H 1000
		575	1.15	15	9	6.1	35	7.1	71.9	80.0	0 K43	7.3	H 1000

***All Grundfos 4" motors have a ground (green) wire.**

Franklin Motors

(Refer to the Franklin Submersible Motors Application Maintenance Manual)

Moto nformation

Maximum Cable Length
Motor Service to Entrance
(Length in feet)

SINGLE-PHASE 60 HZ

Motor Rating		Copper Wire Size								
VOLTS	HP	14	12	10	8	6	4	2	0	00
115	1/3	130	210	340	540	840	1300	1960	2910	
	1/2	100	160	250	390	620	960	1460	2160	
230	1/3	550	880	1390	2190	3400	5250	7960		
	1/2	400	650	1020	1610	2510	3880	5880		
	3/4	300	480	760	1200	1870	2890	4370	6470	
	1	250	400	630	990	1540	2380	3610	5360	6520
	1 1/2	190	310	480	770	1200	1870	2850	4280	5240
	2	150	250	390	620	970	1530	2360	3620	4480
	3	120	190	300	470	750	1190	1850	2890	3610
	5			180	280	450	710	1110	1740	2170

THREE-PHASE 60 HZ

VOLTS	HP	14	12	10	8	6	4	2
208	1 1/2	310	500	790	1260			
	2	240	390	610	970	1520		
	3	180	290	470	740	1160	1810	
		5170	280	4690	1080			1660
230	1 1/2	360	580	920	1450			
	2	280	450	700	1110	1740		
	3	210	340	540	860	1340	2080	
	5		200	320	510	800	1240	1900
460	1 1/2	1700						
	2	1300	2070					
	3	1000	1600	2520				
	5	590	950	1500	2360			
575	1 1/2	2620						
	2	2030						
	3	1580	2530					
	5	920	1480	2330				

FOOTNOTES:

1. If aluminum conductor is used, multiply lengths by 0.5. Maximum allowable length of aluminum is considerably shorter than copper wire of same size.
2. The portion of the total cable which is between the service entrance and a 3Ø motor starter should not exceed 25% of the total maximum length to ensure reliable starter operation. Single-phase control boxes may be connected at any point of the total cable length.
3. Cables #14 to #0000 are AWG sizes, and 250 to 300 are MCM sizes.

Troubles oting

SUPPLY VOLTAGE

How to Measure
By means of a voltmeter, which has been set to the proper scale, measure the voltage at the control box. On single-phase units, measure between line and neutral.

What It Means
When the motor is under load, the voltage should be within 10% of the nameplate voltage. Larger voltage variation may cause winding damage. Large variations in the voltage indicate a poor electrical supply and the pump should not be operated until these variations have been corrected.
If the voltage constantly remains high or low, the motor should be changed to the correct supply voltage.

CURRENT MEASUREMENT

How to Measure
By use of an ammeter, set on the proper scale, measure the current on each power lead at the control box. See page 6, for motor amp draw information.
Current should be measured when the pump is operating at a constant discharge pressure with the motor fully loaded.

What It Means
If amp draw exceeds the listed service factor amps (SFA), check for the following:

1. Loose terminals in control box or possible cable defect. Check winding and insulation resistances.
2. Too high or low supply voltage.
3. Motor windings are shorted.
4. Pump is damaged causing a motor overload.

WINDING RESISTANCE

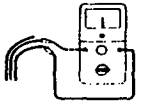

How to Measure
Turn off power and disconnect the drop cable leads in the control box. Using an ohmmeter, set scale selectors to Rx1 for values under 10 ohms and Rx10 for values over 10 ohms.
Zero-adjust the meter and measure the resistance between leads. Record the values. Motor resistance values can be found on page 6.

What It Means
If all the ohm values are normal, and the cable colors are correct, the windings are not damaged. If any one ohm value is less than normal, the motor may be shorted. If any one ohm value is greater than normal, there is a poor cable connection or joint. The windings or cable may also be open.
If some of the ohm values are greater than normal and some less, the drop cable leads are mixed. To verify lead colors, see resistance values on page 6.

INSULATION RESISTANCE

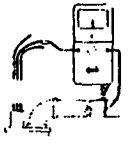

How to Measure
Turn off power and disconnect the drop cable leads in the control box. Using an ohm or mega ohmmeter, set the scale selector to Rx100k and zero-adjust the meter. Measure the resistance between the lead and ground(discharge pipe or well casing,if steel).

What It Means
For ohm values, refer to table below. Motors of all Hp, voltage, phase and cycle duties have the same value of insulation resistance.

OHM VALUE	MEGOHM VALUE	CONDITION OF MOTOR AND LEADS
		Motor not yet installed:
2,000,000(or more)	2.0	New Motor
1,000,000(or more)	1.0	Used motor which can be reinstalled in the well.
		Motor in well (Ohm readings are for drop cable plus motor):
500,000-1,000,000	0.5-1.0	A motor in reasonably good condition.
20,000-50,000	0.02-0.5	A motor which may have been damaged by lightning or with damaged leads. Do not pull the pump for this reason.
10,000-20,000	0.01-0.02	A motor which definitely has been damaged or with damaged cable. The pump should be pulled and repairs made to the cable or the motor replaced. The motor will still operate, but probably not for long.
less than 10,000	0-0.01	A motor which has failed or with completely destroyed cable insulation. The pump must be pulled and the cable repaired or the motor replaced. The motor will not run.

Pump Won't Start

Possible Cause	Check This By . . .	Correct This By . . .
No power at the motor	Check for voltage at the control box or panel.	If there is no voltage at the control panel, check the feeder panel for tripped circuits and reset those circuits.
Fuses are blown or the circuit breakers have tripped.	Turn off the power and remove the fuses. Check for continuity with an ohmmeter.	Replace the blown fuses or reset the circuit breaker. If the new fuses blow or the circuit breaker trips, the electrical installation, motor, and wires must be checked for defects.
(3-phase motors only) **Motor starter overloads are burned or have tripped**	Check for voltage on the line and load side of the starter. Check the amp draw and make sure the heater is sized correctly.	Replace any burned heaters or reset. Inspect the starter for other damage. If the heater trips again, check the supply voltage. Ensure that heaters are sized correctly and the trip setting is appropriately adjusted.
(3-phase motors only) **Starter does not energize**	Energize the control circuit and check for voltage at the holding coil.	If there is no voltage, check the control circuit fuses. If there is voltage, check the holding coil for weak connections. Ensure that the holding coil is designed to operate with the available control voltage. Replace the coil if defects are found.
Defective controls	Check all safety and pressure switches for defects. Inspect the contacts in control devices.	Replace worn or defective parts or controls.
Motor or cable is defective	Turn off the power and disconnect the motor leads from the control box. Measure the lead-to-lead resistance with an ohmmeter (set to R x 1). Measure the lead-to-ground values with an ohmmeter (set to R x 100K).	If an open or grounded winding is found, remove the motor from the well and recheck the measurements with the lead separated from the motor. Repair or replace the motor or cable.
(1-phase motors only) **Defective capacitor**	Turn off the power and discharge the capacitor by shorting the leads together. Check it with an analog ohmmeter (set to R x 100K).	When the meter is connected to the capacitor, the needle should jump toward 0 (zero) ohms and slowly drift back to infinity (∞). Replace capacitor if it is defective.
Defective pressure switch or the tubing to it is plugged.	Watch the pressure guages as the pressure switch operates. Remove the tubing and blow through it.	Replace as neccessary.
The pump is mechanically bound or stuck	Turn off the power and manually rotate the pump shaft. Also check the motor shaft rotation, the shaft height, and the motor's amp draw (to see if it indicates a locked rotor).	If the pump shaft doesn't rotate, remove the pump and examine it. If necessary, dismantle it and check the impellers and seal for obstruction. Check for motor corrosion.

Pump Does Not Produce Enough Flow (GPM)

Possible Cause	Check This By . . .	Correct This By . . .
(3-phase motors only) **Shaft is turning in the wrong direction.**	Check to make sure the electrical connections in the control panel and correct.	Correct the wiring. For single phase motors, check the wiring diagram on the motor. For three phase motors, simply switch any two power leads.
Pump is operating at the wrong speed (too slow)	Check for low voltage and phase imbalance	Replace defective parts or contact power company, as applicable.
Check valve is stuck (or installed backwards)	Remove the check valve.	Re-install or replace.
Parts or fittings in the pump are worn or **Impellers or inlet Strainer is clogged**	Install a pressure gauge near the discharge port, start the pump, and gradually close the discharge valve. Read the pressure at shutoff. (Do not allow the pump to operate for an extended period at shutoff).	Convert the PSI you read on the gauge to Feet of Head by: $\frac{\text{PSI x 2.31 ft/PSI}}{\text{Specific Gravity}} = \_\_\_\_\_$ ft. Add to this number the number of feet (vertically) from the guage down to the water's pumping level. Refer to the pump curve for the model you are working with to determine the shutoff head to should expect for that model. If that head is close to the figure you came up with (above), the pump is probably OK. If not, remove the pump and inspect impellers, chambers, etc.
The water level in the well may be too low to supply the flow desired or **Collapsed well**	Check the drawdown in the well while the pump is operating.	If the pumping water level (including drawdown) is not AT LEAST 3 FEET above the pump's inlet strainer, either: 1. Lower the pump further down the well. 2. Throttle back the discharge valve to decrease the flow, thereby reducing drawdown.
Broken shaft or coupling	Pull pump and inspect	Replace as necessary.
There are leaks in the fittings or piping	Pull the pump out of the well.	The suction pipe, valves, and fittings must be made tight. Repair any leaks and retighten all loose fittings.

Fuses Blow or Heaters Trip

Possible Cause	Check This By . . .	Correct This By . . .
Improper voltage	Check the voltage at the control box or panel.	If the voltage varies by more than 10% (+ or -), contact the power company.
	If the incoming voltage is OK, check the wire size and the distance between the pump motor and the pump control panel.	Rewire with correct guage. Undersized wire and a great distance between the control panel and the pump motor increases resistance and decreases the voltage by the time it reaches the pump motor.
The starter overloads are set too low.	Cycle the pump and measure the amperage.	Increase the heater size or adjust the trip setting. Do not, however, exceed the recommended rating.
(3-phase motors only) **The three-phase current is imbalanced.**	Check the current draw on each lead to the motor.	The current draw on each lead must be within 5% of eachother (+ or -). If they are not, check the wiring.
The wiring or connections are faulty.	Check to make sure the wiring is correct and there are no loose terminals.	Tighten any loose terminals and replace any damaged wire.
(1-phase motors only) **Capacitor is defective**	Turn off the power and discharge the capacitor. Check the capacitor with an ohmmeter (set at R x 100K). See page 15 for instructions.	When the meter is connected to the capacitor, the needle should jump towards 0 (zero) ohms and then slowly drift back to infinity (∞). Replace the capacitor if it is defective.
Fuse, heater, or starter are the wrong size	Check the fuses and heaters against the motor manufacturer's specification charts.	Replace as necessary.
The control box location is too hot	Touch the box with your bare hand during the hottest part of the day -- you should be able to keep your hand on it without burning.	Shade, ventilate, or move the control box so its environment does not exceed 120°F.
(1-phase motors only) **Wrong control box**	Check requirements for the motor against the control box specificatons.	Replace as necessary.
Defective pressure switch	Watch guages as pressure switch operates	Replace as necessary.
The motor is shorted or grounded.	Turn off the power and disconnect the wiring. Measure the lead-to-lead resistance with an ohmmeter (set to R x 1). Measure the lead-to-ground resistance with an ohmmeter (set to R x 100K) or a megaohmmeter. Compare these measurements to the rated values for your motor.	If you find an open or grounded winding, remove the motor and recheck the leads. If OK, check the leads for continuity and for bad splice.
Poor motor cooling	Find the internal diameter of the well casing (or sleeve, if used). For proper cooling, the flow of water must not be less than the GPM shown across the bottom scale on page ___.	Throttle up the pump flow (GPM) so proper cooling is possible. or Pull the pump out of the well and add a sleeve with a smaller internal diameter .

Pump Cycles Too Often

Possible Cause	Check This By . . .	Correct This By . . .
The pressure switch is defective or is not properly adjusted.	Check the pressure setting on the switch. Check the voltage across closed contacts.	Readjust the pressure switch or replace it if defective.
The tank is too small	Check the tank size and amount of air in the tank. The tank volume should be approximately 10 gallons for each Gallon-Per-Minute of pump capacity. At the pump cut-in pressure, the tank should be about 2/3 filled with air.	Replace the tank with one that is the correct size.
There is insufficient air charging of the tank or piping is leaking.	Pump air into the tank or diaphragm chamber. Check the diaphragm for leaks. Check the tank and piping for leaks with soapy water. Check the air-to-water ratio in the tank.	Repair as necessary.
Plugged snifter valve or bleed orifice (causing pressure tank to be waterlogged)	Examine them for dirt or erosion.	Repair or replace as neccessary.
Leak in the pressure tank or piping.	Apply soapy water to pipes and tank, then watch for bubbles, indicating leaks.	Repair or replace as necessary.
The level control is defective or is not properly set.	Check the setting and operation of the level control.	Readjust the level control setting (according to the manufacturer's instructions) or replace it if defective.
Pump is oversized for the application. It is outpumping the yield of the well and pumping itself dry.	Check the yield of the well (determined by the well-test) against the pump's performance curve.	Reduce the flow by throttling back the valve. or Change the pump.

P-122

Grundfos Submersible Pump

Pump Type	SP
Model	10S03-6

Franklin Electric Motor

2K95 16-1018
3-Wire Submersible Motor

Model	2145029004
HP	1/3
HZ	60
Volts	115
AMP	8.0
KW	.25
RPM	3450
S.F. Max. Amp.	9.2
PH	1
KVA Code	N
SF	1.75
Continuous Duty	E79319

P-108

Grundfos Submersible Pump

Pump Type	SP
Model	10S03-6

Franklin Electric Motor

2E94 02-4073
3-Wire Submersible Motor

Model	2145029004
HP	1/3
HZ	60
Volts	115
AMP	8.0
KW	.25
RPM	3450
S.F. Max. Amp.	9.2
PH	1
KVA Code	N
SF	1.75
Continuous Duty	E79319

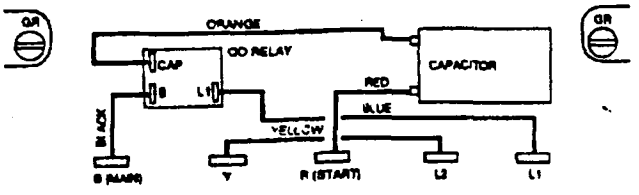

4"
1/3-1 HP QD RELAY
280 10-4 915
Sixth digit depends on HP

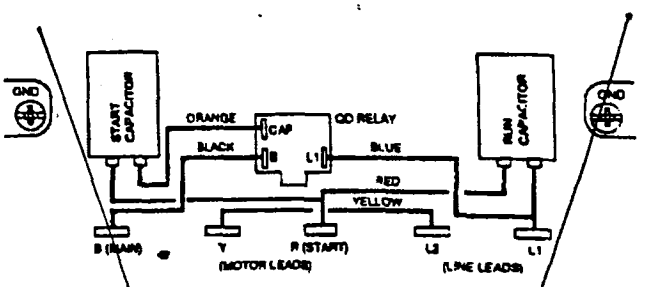

4"
1/2 - 1 HP CRC QD RELAY
282 40-5 015
Sixth digit depends on HP

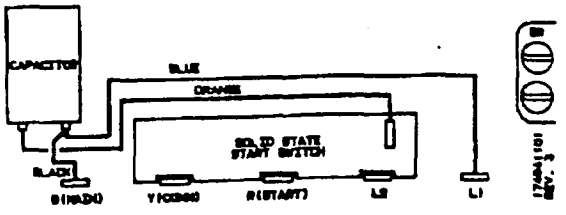

4"
1/3 - 1 HP QD
280 10-4 910
Sixth digit depends on HP

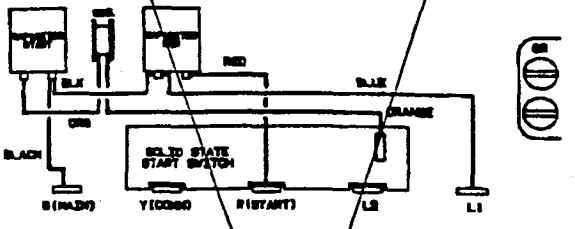

4"
1/2 - 1 HP CRC
282 40-5010
Sixth digit depends on HP

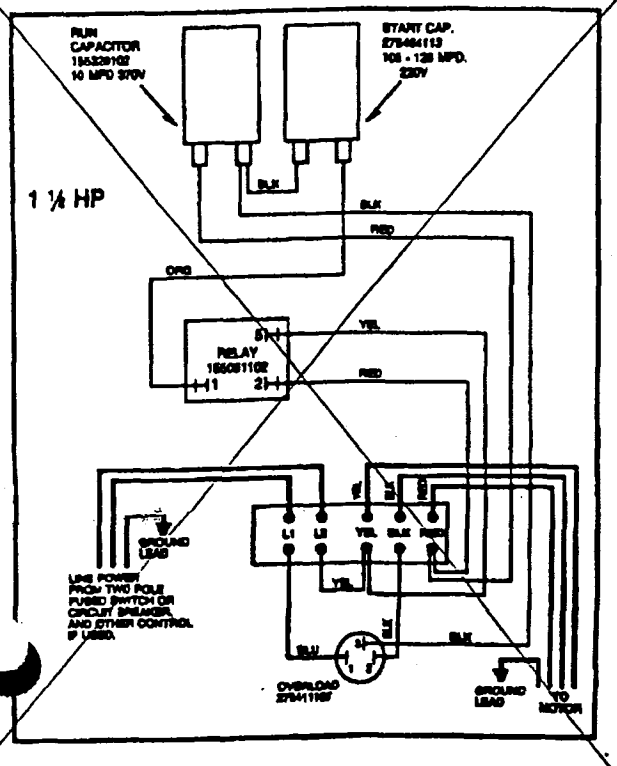

4" STANDARD
1 1/2 HP
282 300 8110

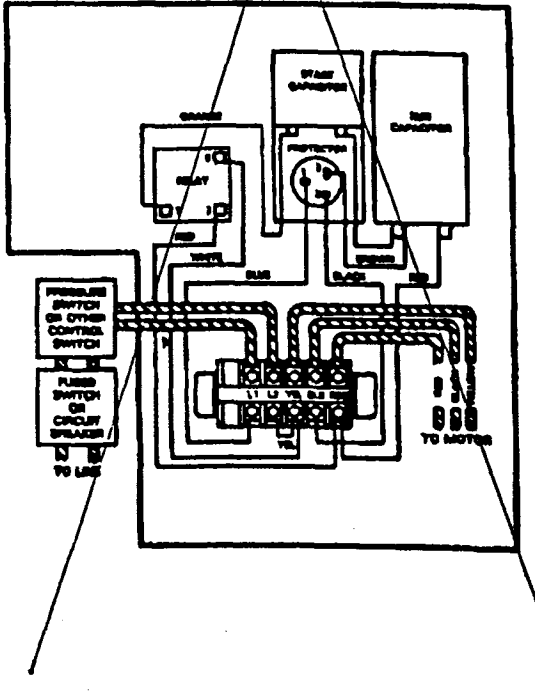

4"
1 1/2 HP
STANDARD
282 3007 103

Ohmmeter Tests
Integral Horsepower Control Box (Power Off)

A. OVERLOADS (Push Reset Buttons to make sure contacts are closed.)

1. Meter Setting: R x 1.
2. Connections: Overload terminals.
3. Correct meter reading: Should not be more than 0.5 ohms.

B. CAPACITOR (Disconnect leads from one side of each capacitor before checking.)

1. Meter Setting: R x 1,000.
2. Connections: Capacitor terminals.
3. Correct meter reading: Pointer should swing toward zero, then drift back to infinity, except for capacitors with resistors which will drift back to 15, 000 ohms.

C. RELAY COIL (Disconnect lead from Terminal #5)

1. Meter Setting: R x 1,000.
2. Connections: #2 & #5.
3. Correct meter readings: 4.5-7.0 (4,500 to 7,000 ohms) for all models.

D. RELAY CONTACT (Disconnect lead from Terminal #1)

1. Meter Setting: R x 1.
2. Connections: #1 & #2.
3 Correct meter reading: Zero ohms for all models.

E. CONTACTOR COIL (Disconnect lead from one side of coil)

1. Meter Setting: R x 100.
2. Connections: Coil terminals.
3. Correct meter reading: 180 to 1,400 ohms

F. CONTACTOR CONTACTS

1. Meter Setting: R X 1.
2. Connections: L1 & T1 or L2 & T2.
3. Manually close contacts.
4. Correct meter reading: Zero ohms.

Table 21 QD Control Box Parts

HP	VOLTS	CONTROL BOX MODEL NO.	(1) SOLID STATE SW OR QD (BLUE) RELAY	START CAPACITOR	MFD	VOLTS	RUN CAPACITOR	MFD	VOLTS	COIL
1/3	115	2801024910	152138905(5)	275464125	159-191	115				
		2801024915	223415905(5)	275464125	159-191	115				
1/3	230	2801034910	152138901(5)	275464126	43-53	220				
		2801034915	223415901(5)	275464126	43-53	220				
1/2	115	2801044910	152138906(5)	275464201	250-300	125				
		2801044915	223415906(5)	275464201	250-300	125				
1/2	230	2801054910	152138902(5)	275464105	59-71	220				
		2801054915	223415902(5)	275464105	59-71	220				
1/2	230	2824055010	152138912	275470115	43-52	220	155328101	15	370	155662901
		2824055015	223415912(6)	275464105	59-71	220	155327107	15	370	
3/4	230	2801074910	152138903(5)	275464118	86-103	220				
		2801074915	223415903(5)	275464118	86-103	220				
3/4	230	2824075010	152138913	275470114	108-130	220	155327108	23	370	155662901
		2824075015	223415913(6)	275464118	86-103	220	155327108	23	370	
1	230	2801084910	152138904(5)	275464113	105-126	220				
		2801084915	223415904(5)	275464113	105-126	220				
1	230	2824085010	152138914	275470114	108-130	220	155327108	23	370	155662901
		2824085015	223415914(6)	275470114	108-130	220	155327108	23	370	

Footnotes:

(1) Prefixes 152 are solid state switches.
Prefixes 223 are QD (Blue) Relays.

(2) Control boxes supplied with solid state relays are designed to operate on normal 230v systems. For 208v systems or where line voltage is between 208v and 210v use the next larger cable size, or use boost transformer to raise the voltage to 230 volts.

(3) Voltage relays kits 115 volts 305102 901 and 230 volt 305102 902 will replace either current, voltage or QD Relays, and solid state switches.

(4) QD control boxes produced H85 or later do not contain an overload in the capacitor. On winding thermal overloads which adapt to three-wire motors rated 1/3 - 1 hp in A85. If a control box dated H85 or later is applied with a motor dated M84 or earlier, overload protection can be provided by adding an overload kit to the control box.

(5) May be replaced with QD relay kits 305101 901 thru 906. Use same kit suffix as switch or relay suffix.

(6) Replace with CRC QD Relaying Kits. 223 415 912 with 305 105 901. 223 415 913 with 305 105 902 and 223 415 914 with 305 105 903.

Table 22 Overload Kits

(1) For Control Boxes with model numbers that end with 915.

(2) For Control Boxes with model numbers that end with 910.

HP	Volts	Kit Number (1)	Kit Number (2)
1/3	115	305100901	305091 901
1/3	230	305100902	305091 902
1/2	115	305100903	305091 903
1/2	230	305100904	305091 904
3/4	230	305100905	305091 905
1	230	305100906	305091 906

Single Phase Control Boxes

Checking and Repairing Procedures (Power Off)

CAUTION: Turn power off at the power supply panel and discharge capacitors before using ohmmeter.

A. General Procedures:

1. Disconnect line power.
2. Inspect for damaged or burned parts, loose connections, etc.
3. Check against diagram in control box for misconnections.
4. Check motor insulation and winding resistance.

B. Use of Ohmmeter:

1. Ohmmeter such as Simpson Model 372 or 260. Triplet Model 630 or 666 may be used.
2. Whenever scales are changed, clip ohmmeter lead together and "zero balance" meter.

C. Ground (Insulation Resistance) Test:

1. Ohmmeter Setting: Highest scale R x 10K, or R x 100K
2. Terminal Connections: One ohmmeter lead to "Ground" terminal or Q.D. control box lid and touch other lead to the other terminals on the terminal board.
3. Ohmmeter Reading: Pointer should remain at infinity (∞).

Additional Tests

Solid State Capacitor Run (CRC) Control Box

A. Run Capacitor

1. Meter setting: R x 1,000
2. Connections: Red and Black leads
3. Correct meter reading:
   Pointer should swing toward zero, then drift back to infinity.

B. Inductance Coil

1. Meter setting: R x 1
2. Connections: Orange leads
3. Correct meter reading:
   Less than 1 ohm.

C. Solid State Switch

Step 1 Triac Test

1. Meter setting: R x 1,000
2. Connections: R(Start) terminal and Orange lead on start switch.
3. Correct meter reading:
   Should be near infinity after swing.

Step 2, Coil Test

1. Meter setting: R x 1
2. Connections: Y(Common) and L2.
3. Correct meter reading:
   Zero ohms.

Ohmmeter Tests Quick Disconnect (QD) Solid State Control Box

A. Start Capacitor

1. Meter Setting: R x 1,000.
2. Connections: Capacitor terminals.
3. Correct meter reading:
   Pointer should swing toward Zero, then back to infinity.

B. Solid State Switch

Step 1, Triac Test

1. Meter Setting: R x 1,000.
2. Connections: R(Start) terminal and orange lead on start switch.
3. Correct meter reading:
   Infinity for all models.

Step 2 Coil Test

1. Meter Setting: R x 1.
2. Connections: Y(Common) and L2.
3. Correct meter reading:
   Zero ohms for all models.

C. Potential (Voltage) Relay

Step 1, Coil Test

1. Meter setting: R x 1,000.
2. Connections: #2 & #5.
3. Correct meter readings:
   For 115 Volt Boxes
   .7-1.8 (700 to 1,800 ohms).
   For 230 Volt Boxes
   4.5-7.0 (4,500 to 7,000 ohms).

Step 2, Contact Test

1. Meter setting: R x 1.
2. Connections: #1 & #2.
3. Correct meter reading:
   Zero for all models.

D. Current Relay

Step 1, Coil Test.

1. Meter setting: R x 1.
2. Connections: #1 & #3.
3. Correct meter reading:
   Less than 1 ohm for all models.

Step 2, Contact Test

1. Meter setting: R x 1,000.
2. Connections: #2 & #4.
3. Correct meter reading:
   Infinity for all models.

E. Q.D. (Blue) Relay

Step1. Triac Test

1. Meter setting: R x 1000.
2. Connections: Cap and B terminal.
3. Correct meter reading:
   Infinity for all models.

Step 2, Coil Test

1. Meter Setting: R x 1.
2. Connections: L1 and B.
3. Correct meter reading:
   Zero ohms for all models.

Single Phase Control Boxes

Checking and Repairing Procedures (Power On)

CAUTION: Power must be on for these tests. Do not touch any live parts.

A. General Procedures:

1. Establish line power.
2. Check no load voltage (pump not running).
3. Check load voltage (pump running).
4. Check current (amps) in all motor leads.

B. Use of Volt/Amp meter:

1. Meter such as Amprobe Model RS300 or equivalent may be used.
2. Select scale for voltage or amps depending on tests.
3. When using amp scales, select highest scale to allow for inrush current, then select for midrange reading.

C. Voltage Measurements:

Step 1, no load.

1. Measure voltage at L1 and L2 of pressure switch or line contactor.
2. Voltage Reading: Should be ± 10% of motor rating.

Step 2, load.

1. Measure voltage at load side of pressure switch or line contactor with pump running.
2. Voltage Reading: Should remain the same except for slight dip on starting.

D. Current (Amp) Measurements:

1. Measure current on all motor leads. Use 5 conductor test cord for Q.D. control boxes.
2. Amp Reading: Current in Red lead should momentarily be high, then drop within one second to values on page 11. This verifies relay or solid state relay operation. Current in Black and Yellow leads should not exceed values on page 11.

E. Voltage Symptoms:

1. Excessive voltage drop on starting.
2. Causes: Loose connections, bad contacts or ground faults, or inadequate power supply.

F. Current Symptoms:

1. Relay or switch failures will cause Red lead current to remain high and overload tripping.
2. Open run capacitor(s) will cause amps to be higher than normal in the Black and Yellow motor leads and lower than normal or zero amps in the Red motor lead.
3. Relay chatter is caused by low voltage or ground faults.
4. A bound pump will cause locked rotor amps and overloading tripping.
5. Low amps may be caused by pump running at shutoff, worn pump or stripped splines.
6. Failed start capacitor or open switch/relay are indicated if the red lead current is not momentarily high at starting.

CAUTION:

The tests in this manual for components such as capacitors, relays, and solid state switches should be regarded as indicative and not as conclusive. For example: a capacitor may test good (not open, not shorted) but it may have lost some of it's capacitance and may no longer be able to perform its function.

To verify proper operation of solid state switches or relays, refer to operational test procedure described in paragraph D-2.

S Easy Selection Chart

10 GPM

FLOW RANGE

(5 TO 14 GPM)

SELECTION CHARTS

(Ratings are in GALLONS PER HOUR-GPH)

PUMP OUTLET
1 1/4" NPT

PUMP MODEL	HP	PSI	DEPTH TO PUMPING WATER LEVEL (LIFT) IN FEET																									
			20	40	60	80	100	120	140	160	180	200	220	240	260	280	300	340	400	460	520	600	700	800	900	1000	1100
10S03-6	1/3	20	840	780	741	686	632	318																			
		30	786	709	621	401																					
		40	712	608	500																						
		50	686	487																							
		60	484	292																							
SHUT-OFF PSI:			64	56	47	38	29	21	12	3																	
10S05-9	1/2	0				847	802	746	685	628	566	499	393	207													
		20		835	786	727	667	608	548	472	347	122															
		30	828	777	716	656	600	538	457	320	73																
		40	788	709	646	590	528	440	280																		
		50	688	638	551	518	492	258																			
		60	630	572	504	408	225																				
SHUT-OFF PSI:			100	92	83	74	66	57	48	40	31	23	14	5													
10S07-12	3/4	0					857	828	794	748	705	658	614	570	521	457	362										
		20			848	817	778	734	688	644	601	528	509	420	323	155											
		30		846	812	771	727	682	637	594	549	494	418	302	121												
		40	840	806	765	720	675	631	587	541	494	408	279	85													
		50	800	758	718	666	624	580	538	473	357	234															
		60	751	706	661	617	573	526	462	300	228																
SHUT-OFF PSI:			137	125	120	111	103	94	85	77	68	59	51	42	33	25	16										
10S10-15	1	0							843	815	786	750	714	678	643	608	573	489	226								
		20					836	807	774	739	703	667	632	598	562	522	472	312									
		30				831	802	769	734	698	662	627	592	558	518	463	393	153									
		40		851	827	797	764	728	692	656	621	587	550	508	454	380	276										
		50	848	823	792	758	723	686	651	616	581	544	500	444	386	258	99										
		60	818	787	753	717	681	645	611	576	538	493	434	352	235												
SHUT-OFF PSI:			174	165	157	148	139	131	122	113	105	96	87	79	70	61	53	35	10								
10S15-21	1 1/2	0									853	836	817	795	772	747	721	669	594	511	375						
		20							848	831	811	788	764	739	713	687	661	611	533	415	178						
		30						849	828	807	784	760	735	709	683	657	632	583	485	344							
		40					843	828	804	781	758	731	705	679	653	628	604	552	449	248							
		50				840	822	800	777	752	727	701	675	650	625	600	575	519	389	120							
		60		854	837	818	797	773	748	723	697	671	646	621	596	571	544	478	308								
SHUT-OFF PSI:				232	229	220	211	203	194	185	177	168	159	151	142	133	125	107	81	55	29						
10S20-27	2	0												847	834	819	803	768	707	647	559	500	284				
		20										844	830	814	797	779	760	720	660	602	541	425	67				
		30									842	827	812	795	778	757	737	697	638	580	514	378					
		40							852	839	825	809	792	773	754	734	714	674	615	555	483	309					
		50						860	837	823	807	789	770	751	731	711	691	651	593	531	445	228					
		60					849	836	820	804	786	767	748	728	708	688	668	629	570	502	398	126					
SHUT-OFF PSI:							285	278	268	259	250	242	233	224	215	207	198	181	155	129	103	68	25				
10S30-34	3	0															826	790	751	711	653	577	471	289			
		20														833	822	799	761	720	679	590	394	100			
		30													832	820	809	784	746	704	662	509	367	79			
		40											840	830	819	807	786	770	730	688	646	583	481	308			
		50										839	828	817	805	793	781	755	714	672	629	583	449	230			
		60										828	818	803	791	779	766	739	698	656	611	541	413	184			
SHUT-OFF PSI:												332	324	316	305	298	289	272	246	220	194	159	116	73	29		

109 performance curves for higher head models.

SPECIFICATIONS SUBJECT TO CHANGE WITHOUT NOTICE.

7 GPM

SELECTION CHARTS

FLOW RANGE (3 TO 10 GPM)

PUMP OUTLET 1" NPT

(Ratings are in GALLONS PER HOUR-GPH)

PUMP MODEL	HP	PSI	DEPTH TO PUMPING WATER LEVEL (LIFT) IN FEET																									
			20	40	60	80	100	120	140	160	180	200	220	240	260	280	300	340	400	480	520	600	700	800	900	1000	1100
7S03-8	1/3	20	602	569	534	480	432	385	302	218	110																
		30	559	519	473	427	367	308	154																		
		40	511	465	417	367	271	175	67																		
		50	458	412	346	280	140																				
		60	400	348	236	122																					
SHUT-OFF PSI:			86	77	69	60	52	43	34	26	17	8															
7S05-11	1/2	0					283	366	538	504	470	437	400	362	301	239											
		20			586	558	538	484	440	427	367	348	279	210	128												
		30	607	583	552	532	468	460	420	386	333	281	172														
		40	577	549	510	483	450	418	374	333	255	178	89														
		50	543	511	478	445	408	372	318	258	189																
		60	506	473	439	405	360	316	228	140																	
SHUT-OFF PSI:			122	110	106	95	87	79	70	61	53	44	36	27	18	10											
7S07-15	3/4	0						610	591	573	548	526	501	477	453	428	401	338	172								
		20				608	586	566	542	518	494	470	445	420	392	364	334	214									
		30			601	583	561	539	514	490	466	441	415	390	365	323	266	107									
		40		599	578	556	534	511	487	462	437	412	385	364	311	257	191	67									
		50	586	578	554	531	507	483	458	434	407	381	346	310	250	191	95										
		60	572	551	527	503	479	456	429	404	374	349	299	249	186	92											
SHUT-OFF PSI:			120	101	93	144	136	127	119	110	101	92	84	75	66	58	49	32	8								
7S10-19	1	0								606	590	573	557	540	521	502	483	444	382	290							
		20						601	588	570	552	534	515	496	476	457	438	386	319	170							
		30					598	584	567	546	531	512	493	474	454	435	414	369	276	84							
		40				597	581	564	546	528	509	490	470	451	431	412	389	339	220								
		30		609	594	578	561	544	525	506	487	468	449	429	408	387	361	299	148								
		60	608	589	576	559	541	522	503	484	465	446	426	405	382	358	328	249									
SHUT-OFF PSI:			219	209	200	192	183	174	166	157	148	140	131	123	114	105	97	79	53	27							
7S15-26	1 1/2	0											608	589	581	570	551	530	486	446	402	328					
		20									600	580	578	566	553	539	526	486	450	412	363	265					
		30								599	586	576	563	551	537	524	510	482	439	394	340	234					
		40						608	597	586	574	562	548	535	521	508	493	465	420	375	314	173					
		50					608	596	584	573	560	547	533	519	505	491	477	449	405	353	282	111					
		60				605	594	583	570	556	544	531	517	503	489	475	461	432	387	328	244						
SHUT-OFF PSI:						274	266	257	248	239	231	222	213	205	196	187	178	161	135	110	84	49					

SPECIFICATIONS SUBJECT TO CHANGE WITHOUT NOTICE.

DIMENSIONS AND WEIGHTS

MODEL NO.	FIG.	HP	MOTOR SIZE	DISCH. SIZE	DIMENSIONS IN INCHES A	B	C	D	E	APPROX. SHIP WT.
10S03-6	A	1/3	4"	1 1/4" NPT	19.9	8.8	11.1	3.8	3.9	26
10S05-9	A	1/2	4"	1 1/4" NPT	23.0	9.5	13.5	3.8	3.9	29
10S07-12	A	3/4	4"	1 1/4" NPT	26.7	10.7	16.0	3.8	3.9	32
10S10-15	A	1	4"	1 1/4" NPT	30.3	11.8	18.5	3.8	3.9	34
10S15-21	A	1 1/2	4"	1 1/4" NPT	37.1	13.6	23.5	3.8	3.9	44
10S20-27	A	2	4"	1 1/4" NPT	43.5	15.1	28.4	3.8	3.9	49
10S30-34	A	3	4"	1 1/4" NPT	54.7	20.6	34.1	3.8	3.9	83
10S50-48DS	A	5	4"	1 1/4" NPT	69.4	23.6	45.8	3.8	3.9	115
10S50-58DS*	B	5	4"	1 1/4" MPT	88.2	23.6	64.5	3.8	4.3	142

NOTES: All models suitable for use in 4" wells, unless otherwise noted.
Weights include pump end with motor in lbs.
* Built into sleeve 1¼" MPT discharge, 5" min. well dia.

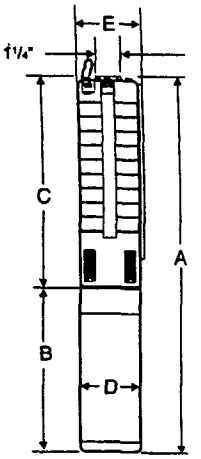

Fig. A

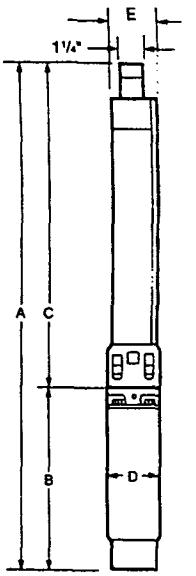

Fig. B

MATERIALS OF CONSTRUCTION

COMPONENT	SPLINED SHAFT (6-27 Stgs.)	CYLINDRICAL SHAFT (34-48 Stgs.)	DEEP SET (58 Stgs.)
Check Valve Housing	304 Stainless Steel	304 Stainless Steel	304 Stainless Steel
Check Valve	304 Stainless Steel	304 Stainless Steel	304 Stainless Steel
Diffuser Chamber	304 Stainless Steel	304 Stainless Steel	304 Stainless Steel
Impeller	304 Stainless Steel	304 Stainless Steel	304 Stainless Steel
Suction Interconnector	304 Stainless Steel	304 Stainless Steel	304 Stainless Steel
Inlet Screen	304 Stainless Steel	304 Stainless Steel	304 Stainless Steel
Pump Shaft	304 Stainless Steel	431 Stainless Steel	431 Stainless Steel
Straps	304 Stainless Steel	304 Stainless Steel	304 Stainless Steel
Cable Guard	304 Stainless Steel	304 Stainless Steel	304 Stainless Steel
Priming Inducer	304 Stainless Steel	316 Stainless Steel	316 Stainless Steel
Coupling	329/420/431 Stainless Steel	329/420/431 Stainless Steel	329/420/431 Stainless Steel
Check Valve Seat	NBR/304 Stainless Steel	NBR/316 Stainless Steel	NBR/316 Stainless Steel
Top Bearing	NBR/304 Stainless Steel	NBR/316 Stainless Steel	NBR/316 Stainless Steel
Impeller Seal Ring	NBR/PBT (Valox®)	NBR/PPS (Ryton®)	NBR/PPS (Ryton®)
Intermediate Bearings	NBR	NBR/304 Stainless Steel	NBR/316 Stainless Steel
Shaft Washer	Not Required	LCP (Vectra®)	LCP (Vectra®)
Split Cone	Not Required	304 Stainless Steel	304 Stainless Steel
Split Cone Nut	Not Required	316 Stainless Steel	304 Stainless Steel
Sleeve	Not Required	Not Required	316 Stainless Steel
Sleeve Flange	Not Required	Not Required	Zincless Bronze*

NOTES: Specifications subject to change without notice.
Valox ® is a registered trademark of General Electric Co.
Vectra ® is a registered trademark of Hoechast Calanese Corporation.
Ryton ® is a registered trademark of Phillips 66.
*** Stainless Steel option available.**

Performance Curves 10 GPM Model 10S

FLOW RANGE: 5 -14 GPM **OUTLET SIZE: 1¼ " NPT** **NOMINAL DIA. 4"**

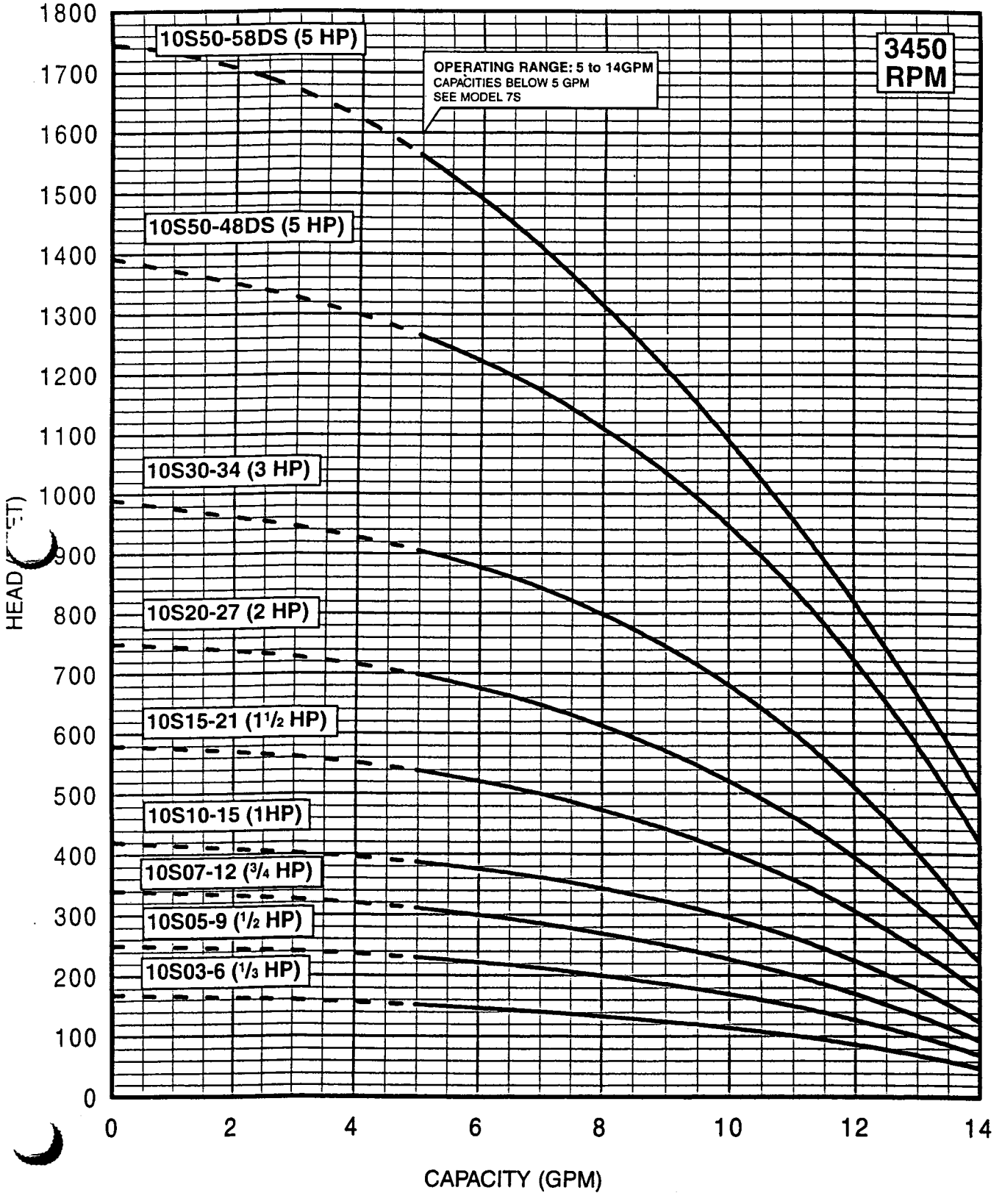

SPECIFICATIONS SUBJECT TO CHANGE WITHOUT NOTICE.
1" MOTOR STANDARD, 3450 RPM.

Performance conforms to ISO 2548 Annex B
@ 2 ft. min. submergence.

GRUNDFOS

Performance Curves 7 GPM Model 7S

FLOW RANGE: 3 -10 GPM **OUTLET SIZE: 1" NPT** **NOMINAL DIA. 4"**

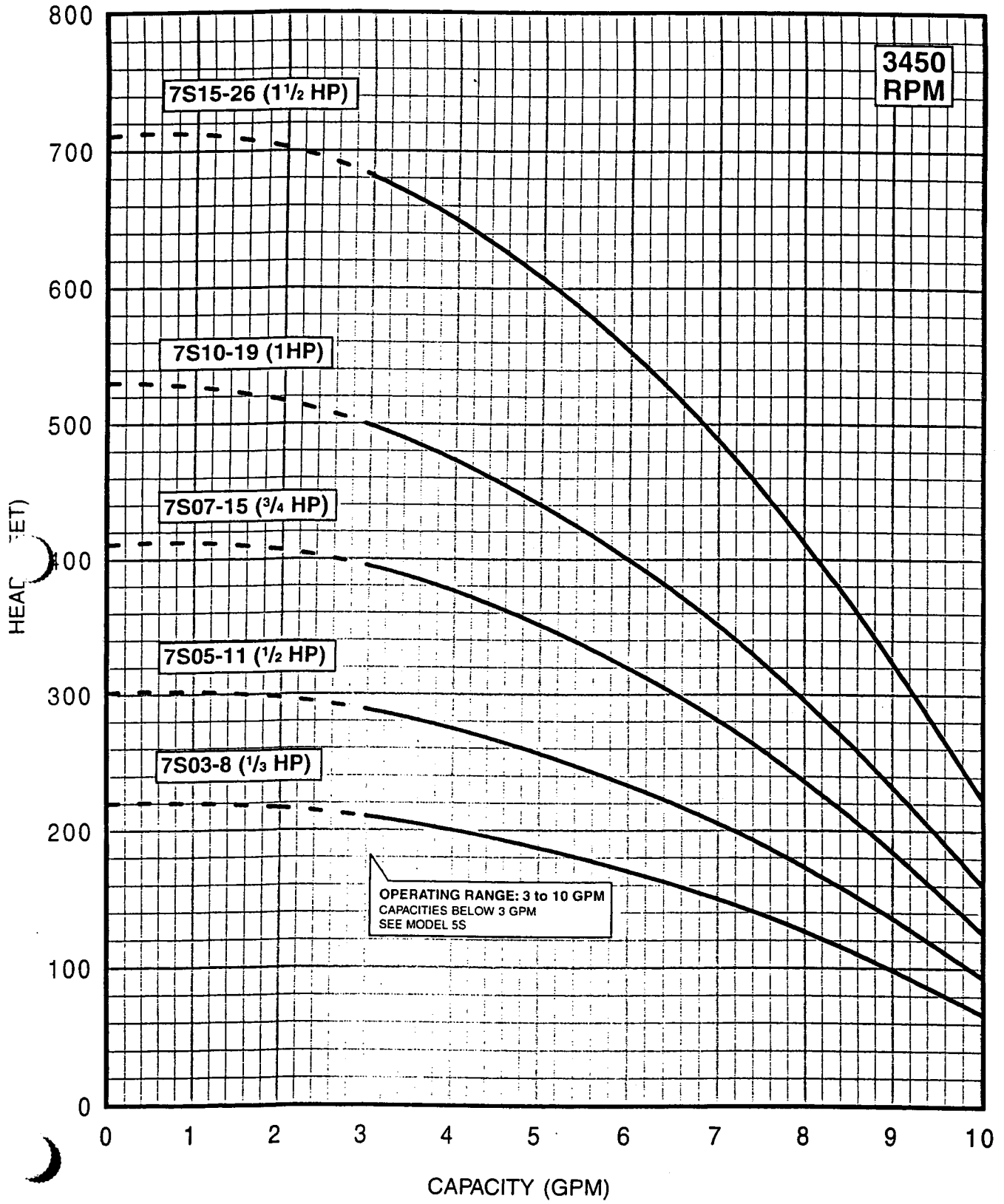

SPECIFICATIONS SUBJECT TO CHANGE WITHOUT NOTICE.
½" MOTOR STANDARD, 3450 RPM.

Performance conforms to ISO 2548 Annex B
@ 2 ft. min. submergence.

GRUNDFOS

DIMENSIONS AND WEIGHTS

MODEL NO.	FIG.	HP	MOTOR SIZE	DISCH. SIZE	DIMENSIONS IN INCHES A	B	C	D	E	APPROX. SHIP WT.
5S03-9	A	1/3	4"	1" NPT	22.3	8.8	13.5	3.8	3.9	27
5S05-13	A	1/2	4"	1" NPT	26.4	9.5	16.9	3.8	3.9	31
5S07-18	A	3/4	4"	1" NPT	31.7	10.7	21.0	3.8	3.9	34
5S10-22	A	1	4"	1" NPT	36.1	11.8	24.3	3.8	3.9	42
5S15-26	A	1 1/2	4"	1" NPT	41.2	13.6	27.6	3.8	3.9	46
5S15-31	A	1 1/2	4"	1" NPT	47.1	13.6	33.5	3.8	3.9	58
5S20-39DS	A	2	4"	1" NPT	55.2	15.1	40.1	3.8	3.9	65
5S30-48DS	A	3	4"	1" NPT	70.0	20.6	49.3	3.8	3.9	90

NOTES: All models suitable for use in 4" wells.
Weights include pump end with motor in lbs.

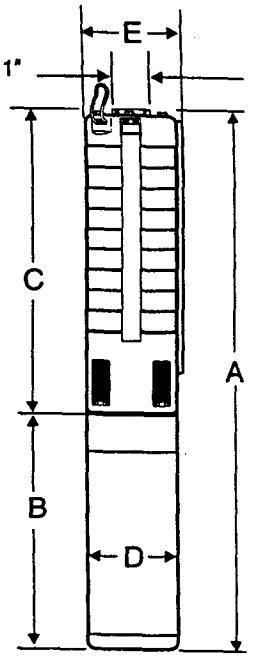

Fig. A

MATERIALS OF CONSTRUCTION

COMPONENT	SPLINED SHAFT (9-26 Stgs.)	CYLINDRICAL SHAFT (31-48 Stgs.)
Check Valve Housing	304 Stainless Steel	304 Stainless Steel
Check Valve	304 Stainless Steel	304 Stainless Steel
Diffuser Chamber	304 Stainless Steel	304 Stainless Steel
Impeller	304 Stainless Steel	304 Stainless Steel
Suction Interconnector	304 Stainless Steel	304 Stainless Steel
Inlet Screen	304 Stainless Steel	304 Stainless Steel
Pump Shaft	304 Stainless Steel	431 Stainless Steel
Straps	304 Stainless Steel	304 Stainless Steel
Cable Guard	304 Stainless Steel	304 Stainless Steel
Priming Inducer	304 Stainless Steel	316 Stainless Steel
Coupling	329/420/431 Stainless Steel	329/420/431 Stainless Steel
Check Valve Seat	NBR/304 Stainless Steel	NBR/316 Stainless Steel
Top Bearing	NBR/304 Stainless Steel	NBR/316 Stainless Steel
Impeller Seal Ring	NBR/PBT (Valox®)	NBR/PPS (Ryton®)
Intermediate Bearings	NBR	NBR/304 Stainless Steel
Shaft Washer	Not Required	LCP (Vectra®)
Split Cone	Not Required	304 Stainless Steel
Split Cone Nut	Not Required	316 Stainless Steel

NOTES: Specifications subject to change without notice.
Valox ® is a registered trademark of General Electric Co.
Vectra ® is a registered trademark of Hoechast Calanese Corporation.
Ryton ® is a registered trademark of Phillips 66.

DIMENSIONS AND WEIGHTS

MODEL NO.	FIG.	HP	MOTOR SIZE	DISCH. SIZE	DIMENSIONS IN INCHES					APPROX. SHIP WT.
					A	B	C	D	E	
7S03-8	A	1/3	4"	1" NPT	21.5	8.8	12.7	3.8	3.9	27
7S05-11	A	1/2	4"	1" NPT	24.7	9.5	15.2	3.8	3.9	30
7S07-15	A	3/4	4"	1" NPT	29.2	10.7	18.5	3.8	3.9	33
7S10-19	A	1	4"	1" NPT	33.6	11.8	21.8	3.8	3.9	36
7S15-26	A	1 1/2	4"	1" NPT	41.2	13.6	27.6	3.8	3.9	46

NOTES: All models suitable for use in 4" wells.
Weights include pump end with motor in lbs.

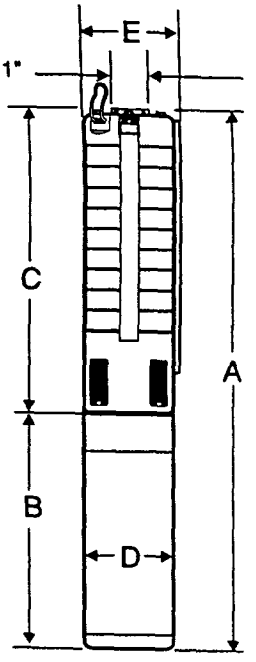

Fig. A

MATERIALS OF CONSTRUCTION

COMPONENT	SPLINE SHAFT
Check Valve Housing	304 Stainless Steel
Check Valve	304 Stainless Steel
Diffuser Chamber	304 Stainless Steel
Impeller	304 Stainless Steel
Suction Interconnector	304 Stainless Steel
Inlet Screen	304 Stainless Steel
Pump Shaft	304 Stainless Steel
Straps	304 Stainless Steel
Cable Guard	304 Stainless Steel
Priming Inducer	304 Stainless Steel
Coupling	329/420/431 Stainless Steel
Check Valve Seat	NBR/304 Stainless Steel
Top Bearing	NBR/304 Stainless Steel
Impeller Seal Ring	NBR/PBT (Valox ®)
Intermediate Bearings	NBR

NOTES: Specifications subject to change without notice.
Valox ® is a registered trademark of General Electric Co.

Performance Curves 16 GPM Model 16S

FLOW RANGE: 10 -20 GPM OUTLET SIZE: 1¼ " NPT NOMINAL DIA. 4"

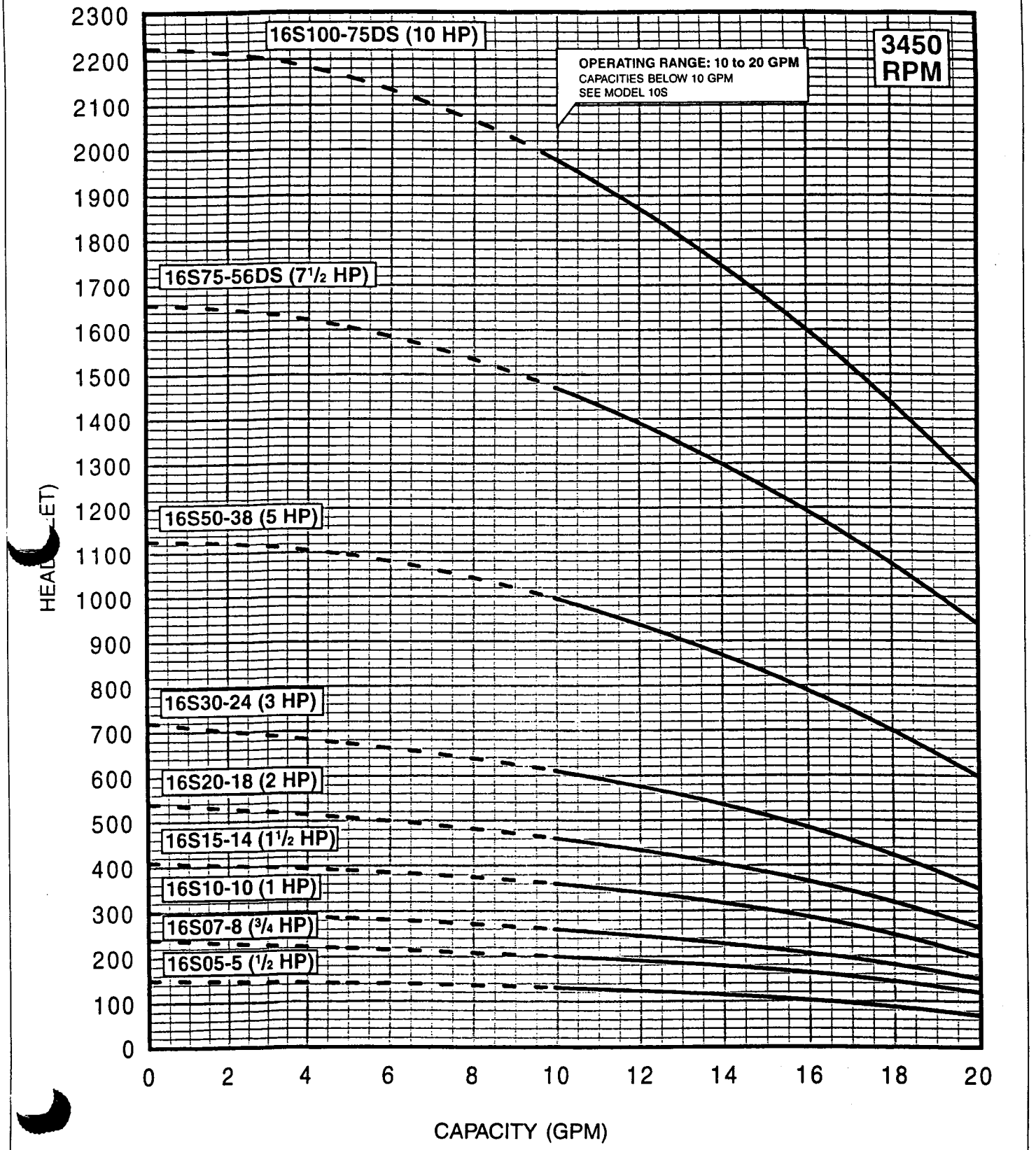

SPECIFICATIONS SUBJECT TO CHANGE WITHOUT NOTICE.
4" MOTOR STANDARD, .5 -5 HP/3450 RPM.
6" MOTOR STANDARD,7.5 -10HP/3450 RPM.

Performance conforms to ISO 2548 Annex B
@ 2 ft. min. submergence.

GRUNDFOS

ASHCROFT

Commercial Hydraulic Gauge
Type 3000, Grade B (3-2-3%)

PI-***

- *304 Stainless steel case liquid filled, dry, or field fillable.*
- *Patented spring suspended movement with polyester segment.*
- *Pressure ranges from vacuum to 15,000 psi and compound.*
- *Two year warranty on liquid filled gauges.*

Ashcroft Type 3000 gauges provide superior performance in applications where vibration, pulsation, mechanical shock and pressure spikes are common factors thus making them the ideal choice for hydraulic applications.

These gauges offer a feature only available in Ashcroft gauges—the patented spring suspended movement with polyester segment. This unique movement was designed to provide superior performance in stressful applications resulting in extended gauge life.

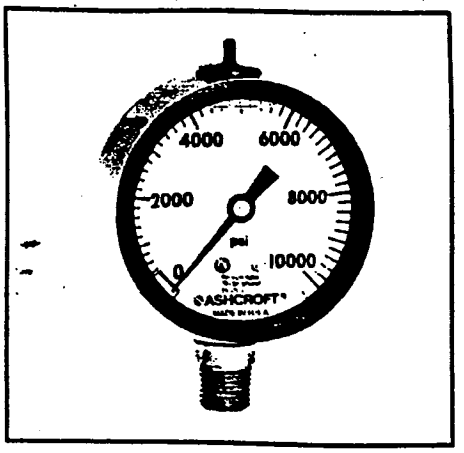

GAUGE SPECIFICATIONS

Model no.:	3000
Size:	2½"
Case:	304 Stainless steel, dry or liquid filled, elastomeric fill/vent plug.
F[illegible]:	Glycerin (0 to 150°F ambient)
Ring:	Elastomeric
Window:	Glass
Dial:	Black figures on white background, aluminum
Pointer:	Black, Aluminum
Bourdon tube:	"C" shaped bronze (Vac–600 psi and compound) Helical bronze (1,000–6,000 psi) Helical stainless steel (10,000–15,000 psi)
Movement:	Patented spring suspended with polyester segment.
Socket:	Brass, O-Ring case seal
Restrictor:	.013" orifice throttle plug in all liquid filled gauges; in dry gauges 1,000 psi and above.
Connection:	¼ NPT lower & back
Ranges:	Vac–15,000 psi & compound. Equivalent metric scales available.

GAUGE OPTIONS

	Factory variation code in ( )
Case:	Sealed case, fillable (XLJ)
Socket:	Throttle plugs, .007", .013", .020", 031", .063" orifices.
Connections:	JIS, DIN and others available on application
Others:	Customized dials, non-standard ranges and special calibration on application.

TO ORDER THIS TYPE 3000 GAUGE:

Select: 25 W 3000 H L 02L 1,000 #

1. Dial Size: 2½"
2. [illegible]ented Spring Suspended Movement:
3. [illegible]pe Number: 3000
4. [illegible] Material: Brass
5. Liquid Filled Case:
6. Connection Size/Location: ¼ NPT lower
7. Range: 1,000 psi

Reference Bulletin CHG-1

MADE IN U.S.A.

Dresser Industries — Dresser Instrument Division

WATTS CO. PRV-40 3

U5 25AUB, and Models S, B, Z3 meet the requirements of A.S.S.E. Std. 1003, CSA Std. B356, and are listed by IAPMO.

water pressure reducing valves

Series U5, U5B Standard Capacity

Water Pressure Reducing Valve with Integral Strainer

For residential, commercial and industrial applications. Furnished with NPT union inlet and NPT female outlet, for sizes ½" through 2". Suitable for initial pressures up to 300 lbs. Reduced pressure range 25-75 lbs. Set for 50 lbs. no flow pressure unless otherwise specified.
Maximum temperature 160°F.

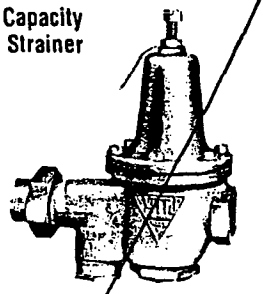

No. U5B-GG

- **Bronze body construction**
- **Stainless steel integral strainer**
- **Renewable stainless steel seat**
- ***High temperature resistant diaphragm***

U5B BY-PASS FEATURE

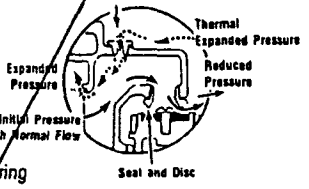

OPTIONS ½"- 1" (Suffix):
S - Sweat union inlet connections
G - with gauge tapping
LP - Low pressure range 10-35 lbs.
Set for 30 lbs. no flow pressure.
Max. pressure 200 lbs. Max. Temp. 180°F.
Z3 - for waterworks pit installations. Has sealed spring cage and stainless steel adjusting and cage screws.
SC - Sealed spring cage for hi-rise applications

OPTIONS ½"- 2" (Suffix):
G - with 160 lb. gauge and tapping
HP - High presure range 75-100 lbs.
Set for 90 lbs. no flow pressure

Contract # 9
Transmittal #
Item #
Project
Subcontractor
Manufacturer
Supplier

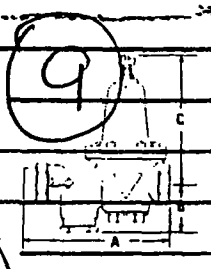

SPECIAL MODELS:
No. 5M3-Z6 - with water meter thread connections and 7½" lay length for new or existing meter box installations. For ⅝", ⅝" x ¾", or ¾" meter setters or resetters.
No. U5-Z9 - with ¾" NPT threaded male union inlet connection and ¾" NPT threaded female outlet connection.
Series U5B Sizes ½"- 2" has built-in thermal expansion by-pass equalizing feature to relieve thermal expansion in closed systems.

However, to be effective, the pressure relief setting of a relief valve must be higher than the available supply main pressure to the reducing valve. Latest allowable working pressure standards for gas and electric water heaters is 150 lbs. which exceeds the majority of supply pressures.

Size (Inches)	DIMENSIONS (Inches) A	B	C	Weight (lbs.)
* ½	5¾	1⅞	5	4
* ¾	6⅜	1⅞	5⅜	5
* 1	6¾	2	6	6
1¼	8	2¼	6⅛	8⅜
1½	9½	3	6¾	14⅛
2	11	3¼	9	23

*U5 available in ½", ¾" and 1" size only

FLOW CAPACITIES

Chart shows the flow capacities in gallons per minute based on average conditions and reduced pressure fall-off due to demand. For specific capacities under various flow conditions, send for F-U5.
Capacities shown are based on a difference of 50 lbs. or more between the initial pressure and the regulator lock-up pressure. Where this difference is less than 50 lbs., deduct 20% from capacity shown.

Series	½"	¾"	1"	1¼"	1½"	2"	2½"	3"	4"
~~U5, U5B~~	~~17~~	~~27~~	~~40~~	~~58~~	~~64~~	~~100~~			
25AUB	16	25	38	52	60	85	–	–	–
~~223~~	~~23~~	~~36~~	~~58~~	~~88~~	~~132~~	~~162~~	~~170~~	–	–
~~N223B~~	–	–					~~285~~	~~375~~	
~~N223F~~	–	–	–	–				~~210~~	
~~127W~~								~~250~~	~~300~~

For Additional Information, send for F-U5.

Series 25AUB

Bronze Body Water Pressure Regulator

For supply water pressures up to 300 lbs. and can be adjusted from 25 to 75 lbs. The standard setting is 50 lbs. The by-pass feature incorporated into these valves accurately controls build-up of system pressure and thermal expansion by equalizing the system and supply pressure when relief setting is in excess of available supply main pressure. NPT union inlet x female outlet.
Max. temperature 160°F.

- **Renewable stainless steel seat**
- **Stainless steel integral strainer**
- **High temperature resisting reinforced diaphragm for hot or cold water**

OPTIONS ½"- 2" (Suffix):
LP - Low pressure range 10-35 lbs.
Set for 30 lbs. no flow pressure.
Max. pressure 100 lbs., Max. Temp. 180°F.
S - with sweat union inlet x NPT outlet
G - with gauge tapping
GG - with gauge tapping and 0-160 lb. gauge
DU - with threaded union inlet and outlet
S-DU - Sweat union inlet and outlet
HP - High pressure range 75-125 lbs.
Set for 90 lbs. no flow pressure

No. 25AUB-GG

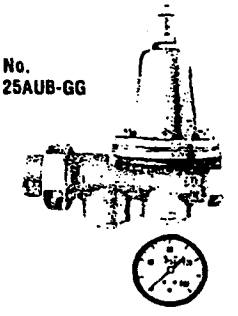

Sizes ½" - 1"
Z3 - for waterworks pit installations. Has sealed spring cage and stainless steel adjusting and cage screws.
½"- 1"
Z7 - for 400 lb. max. initial pressure ¾" only
SC - sealed spring cage for hi-rise applications

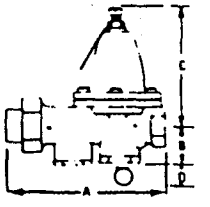

No.	Size (Inches)	DIMENSIONS (Inches) A	B	C	D	Weight (lbs.)
~~25AUB~~	~~½, ¾~~	~~5½~~	~~1¼~~	~~3⅞~~	~~2½~~	~~3½~~
25AUB	1	6	2	4	2½	6½
25AUB	1¼	8¾	2¼	5½	2½	10
25AUB	1½	9	2¼	5½	2½	10
25AUB	2	9¼	3¼	6¾	2½	15

For Additional Information, send for ES-25.

No. N250, N250B

Iron Body Water Pressure Reducing Valves

NPT female inlet and outlet.
Suitable for supply pressures up to 250 lbs.
Adjustable reduced pressure range 25-75 lbs.
No. N250B with built-in by-pass feature.
Sizes ½"- ¾".
No. N250 ¾" size only.

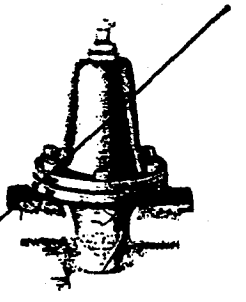

For Additional Information, send for S-N250.

No. 276H300

Water Pressure Test Gauge

Hose connection pressure gauge with high pressure indicator hand used for testing water supply pressure within a building.
¾" hose thread connection. 0-300 PSI.

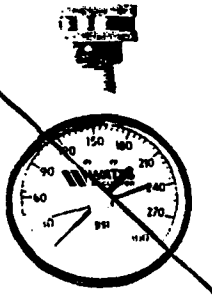

For Additional Information, send for ES-276H300.

PRV-40

GENERAL SERVICE DATA SERIES 25AUB

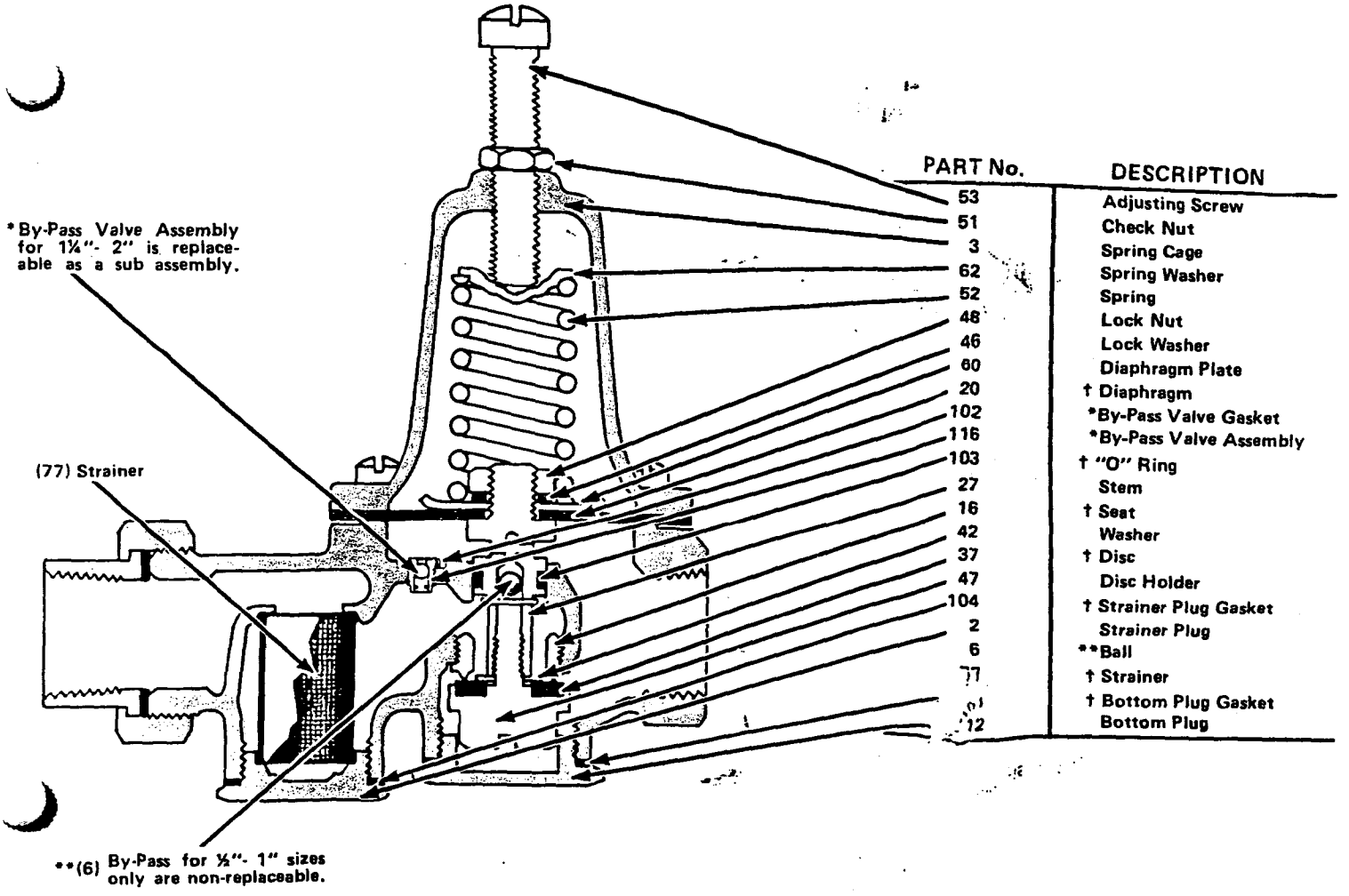

MAINTENANCE INSTRUCTIONS

1. Remove bottom plug (12) and gasket (101).
2. Loosen disc holder (47) with screwdriver or socket wrench.
3. Inspect disc (37) and clean or replace.
4. Seat (16) can be removed, if necessary, with an Allen wrench or socket wrench.
5. Unscrew and remove adjusting screw (53), check nut (51), and spring cage screws. Lift off spring cage (3), spring washer (62), and adjusting spring (52).
6. Loosen and remove lock nut (48), washer (46), plate (60) and diaphragm (20).
7. Lift stem assembly (27), upwards to remove from body.
8. To reassemble valve, follow above instructions in reverse. Turn in adjusting screw for required reduced pressure adjustment.

Repair Kits

† Kit for No. 25AUB includes all items shown above.

Ordering Code No.	Kit No.	Size Inches
864941	½" 25AUB-RK	½
864943	¾" 25AUB-RK	¾
864942	1" 25AUB-RK	1
864944	1¼" 25AUB-RK	1¼
864945	1½" 25AUB-RK	1½
864946	2" 25AUB-RK	2

When Ordering, Specify:

1. Ordering Code Number
2. Size of Valve
3. Type Number
4. Model Shown on Nameplate

A LEADER IN VALVE TECHNOLOGY

WATTS® REGULATOR

Since 1874 — Watts Industries, Inc.

Water Products Division • Safety & Control Valves

USA: 815 Chestnut Street, North Andover, MA 01845-6098
Canada: 441 Hanlan Rd. Woodbridge, Ontario L4L 3T1

ISO 9001 CERTIFIED

LIMITED WARRANTY: Watts Regulator Company warrants each product against defects in material and workmanship for a period of one year from the date of original shipment. In the event of such defects within the warranty period, the Company will, at its option, replace or recondition the product without charge. This shall constitute the exclusive remedy for breach of warranty, and the Company shall not be responsible for any incidental or consequential damages, including without limitation, damages or other costs resulting from labor charges, delays, vandalism, negligence, fouling caused by foreign material, damage from adverse water conditions, chemicals, or any other circumstances over which the Company has no control. This warranty shall be invalidated by any abuse, misuse, misapplication or improper installation of the product. THE COMPANY MAKES NO OTHER WARRANTIES EXPRESS OR IMPLIED EXCEPT AS PROVIDED IN THIS LIMITED WARRANTY.

 ©Watts Regulator Co., 1996

MATERIALS

Bronze body construction
Renewable stainless steel seat
Stainless steel integral strainer
Reinforced Nordel diaphragm ½" - 1" (15 - 25mm)
Reinforced Buna diaphragm 1¼" - 2" (32 - 50mm)
Buna-N valve disc

Note: for LP models where application temperatures exceed 160°F (71°C) but not over 180°F (82°C), Teflon protector should be added to sizes 1¼", 1½", 2" (32, 40, 50mm)

PRESSURE-TEMPERATURE

Initial Pressure:
Suitable for supply pressures up to 300 psi (21.09 bar)

Reduced Pressure:
Adjustable reduced pressure range 25-75 psi (1.76-5.27 bar) Standard setting 50 psi (3.52 bar)

Maximum Temperature: 160°F (71°C)

STANDARDS

Meets requirements of ASSE Standard 1003; (ANSI A112.26.2); CSA Standard B356; Southern Standard Plumbing Code and listed by IAPMO.
Military Standard MIL-V-18146B Type I.

OPTIONS

Sizes ½" - 2" (15 - 50mm)
Suffix:
DU - Threaded female union inlet and outlet connections
G - Gauge tapping
GG - Gauge tapping and 160 psi (11.02 bar) gauge
HP - Hi-pressure range 75-125 psi (5.27-8.79 bar)
LP - Low pressure range of 10-35 psi (69-241 kPa). Set at 30 psi (207 kPa) no-flow pressure. Max pressure 100 psi (6.9 bar). Max temperature 160°F (71°C).
S - Solder union inlet x NPT female outlet connections.
S-DU - Solder union inlet and outlet connections.

Sizes ½", ¾", 1" (15, 20, 25mm)
Suffix:
SC - Sealed spring cage for hi-rise applications
Z3 - for waterworks pit installations. Has sealed spring cage and corrosion resistant adjusting & cage screws.
Z7 - for 400 psi (27.6 bar) initial pressure, ¾" (19mm) only.

CAPACITY

Sizes: ½", ¾", 1", 1¼", 1½", 2"
(15, 20, 25, 32, 40, 50mm)

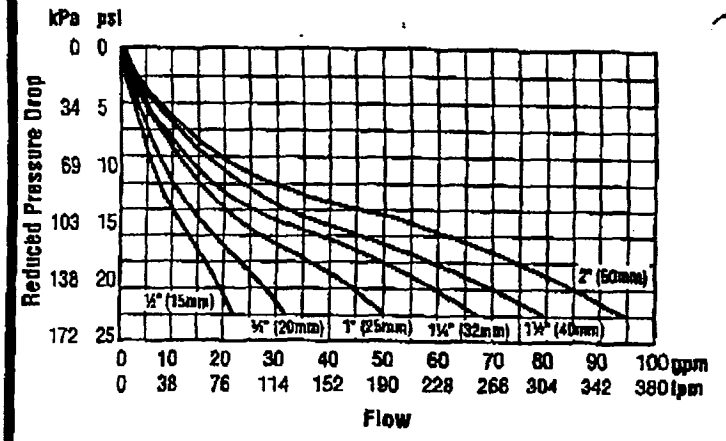

25AUB-DU or
25AUB-S-DU

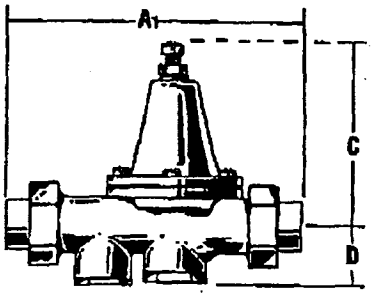

25AUB-GG

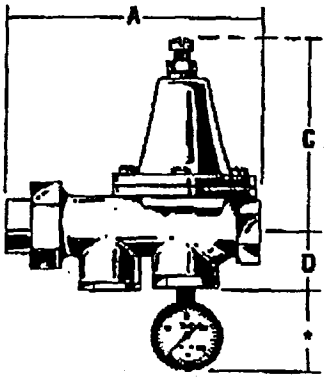

DIMENSIONS - WEIGHT

Size		Dimensions										Weight	
		A		A1		C		D		*			
in.	mm	in.	mm	in.	mm	in.	mm	in.	mm	in.	mm	lbs.	kg.
½	15	5½	140	6¾	171	3⅞	98	1¼	32	2½	64	3½	1.6
¾	20	5½	140	6¾	171	3⅞	98	1¼	32	2½	64	3½	1.6
1	25	6	152	7⅞	200	4	102	2	50	2½	64	6½	3.0
1¼	32	8¾	222	11	279	5½	140	2¼	57	2½	64	10	4.5
1½	40	9	229	11⅛	283	5½	140	2¼	57	2½	64	10	4.5
2	50	9¼	235	12½	318	6¾	172	3¼	83	2½	64	15	6.8

A LEADER IN VALVE TECHNOLOGY
WATTS® REGULATOR
Since 1874 — Watts Industries, Inc.
Water Products Division • Safety & Control Valves

USA: 815 Chestnut Street, North Andover, MA 01845-6098
Canada: 5435 North Service Road, Burlington, Ontario L7L 5H7

ISO 9001 CERTIFIED

© Watts Regulator Co., 1997
Printed in U.S.A.

Series 25AUB Regulators*

WATER PRESSURE REDUCING VALVES

Sizes: ½" to 2" (15 to 50 mm)
With integral strainer

Series 25AUB water pressure reducing valves are suitable for initial water pressures up to 300 psi (21.09 bar) and can be adjusted from 25 to 75 psi (172 to 517 kPa) delivery pressure to the system. The standard setting is 50 psi (345 kPa). They are standardly furnished with a bronze body, union threaded female inlet and female threaded outlet connection, stainless steel seat and strainer. All parts are easily and quickly serviceable without removing the valve from the line. The built-in by-pass prevents buildup of excessive system pressure caused by thermal expansion.

*A water saving test program concluded that reducing the supply pressure from 80 to 50 psi (551 - 346 kPa) resulted in a water saving of 30%.

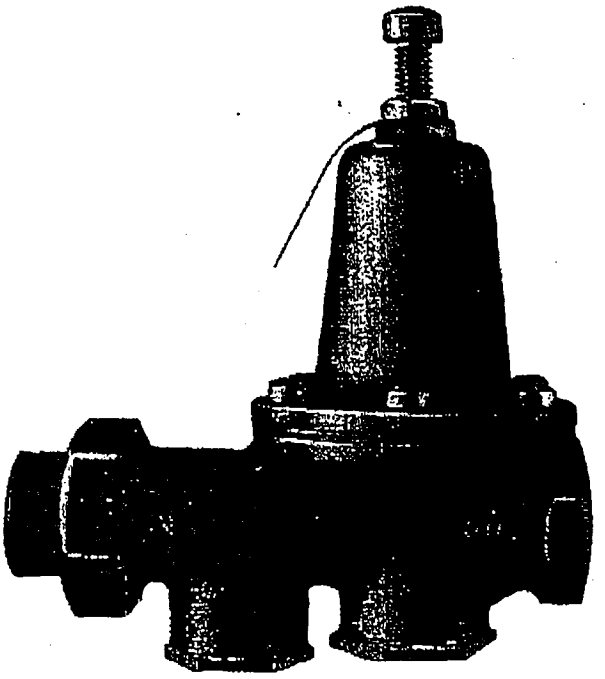

FEATURES

- **Union inlet connection**
- **Integral stainless steel strainer**
- **Renewable seat module**
- **Bronze body construction**
- **Serviceable in line**
- **Bypass feature controls thermal expansion pressure**
- **High temperature resistant reinforced diapgragm for hot water.**

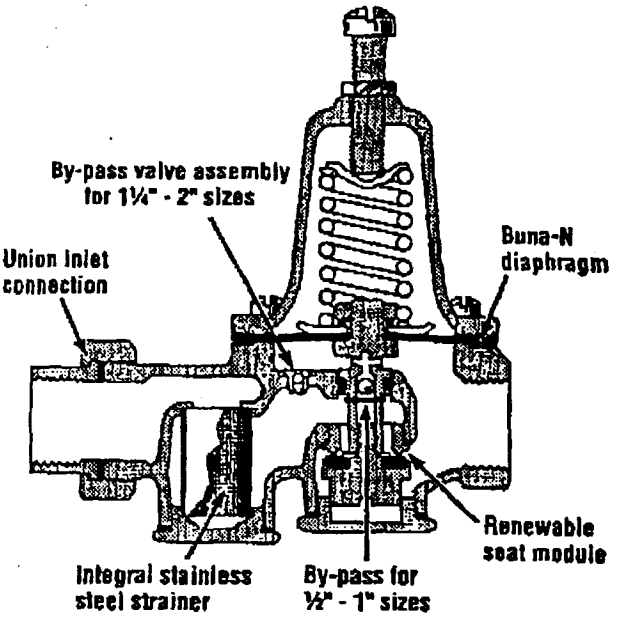

SPECIFICATIONS

When the supply main pressure exceeds 60 psi (413 kPa), an approved water pressure reducing valve and strainer shall be installed in the water service pipe near its entrance to the building to reduce the water pressure to 50 psi (345 kPa) or lower. Sill cocks and outside wall hydrants may be left on full main pressure at the option of the owner.

For service water systems up to and including 2" (50mm) provision shall be made to permit the by-pass flow of water around the valve back into the supply main when pressures, due to thermal expansion on the outlet side of the valve, exceed the pressure in the supply main. Pressure reducing valves with built-in by-pass check valves will be acceptable.

Approved valves shall comply with ASSE 1003 - Watts No. 25AUB.

NOTE: Watts product specifications in U.S. customary units and metric are approximate and are provided for reference only. For precise measurements, please contact Watts Technical Service. Watts reserves the right to change or modify product design, construction, specifications, or materials without prior notice and without incurring any obligation to make such changes and modifications on Watts products previously or subsequently sold.

A LEADER IN VALVE TECHNOLOGY
WATTS® REGULATOR
Since 1874 — Watts Industries, Inc.
Water Products Division • Safety & Control Valves
USA: 815 Chestnut Street, North Andover, MA 01845-6098
Canada: 5435 North Service Road, Burlington, Ontario L7L 5H7

WATTS CO. PRV-40 3

U5 25AUB, and Models S, B, Z3 meet the requirements of A.S.S.E. Std. 1003, CSA Std. B356, and are listed by IAPMO.

water pressure reducing valves

Series U5, U5B Standard Capacity

Water Pressure Reducing Valve with Integral Strainer

For residential, commercial and industrial applications. Furnished with NPT union inlet and NPT female outlet, for sizes ½" through 2". Suitable for initial pressures up to 300 lbs. Reduced pressure range 25-75 lbs. Set for 50 lbs. no flow pressure unless otherwise specified.
Maximum temperature 160°F.

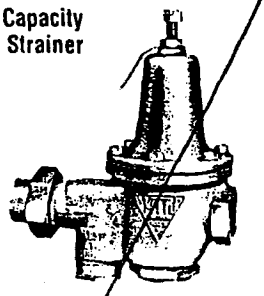

No. U5B-GB

- Bronze body construction
- Stainless steel integral strainer
- Renewable stainless steel seat
- High temperature resistant diaphragm

U5B BY-PASS FEATURE

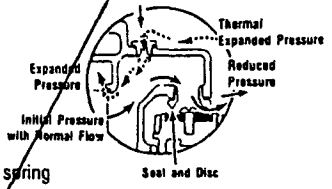

OPTIONS ½"- 1" (Suffix):
S - Sweat union inlet connections
G - with gauge tapping
LP - Low pressure range 10-35 lbs.
Set for 30 lbs. no flow pressure.
Max. pressure 200 lbs. Max. Temp. 180°F.
Z3 - for waterworks pit installations. Has sealed spring cage and stainless steel adjusting and cage screws.
SC - Sealed spring cage for hi-rise applications.

OPTIONS ½"- 2" (Suffix):
GG - with 160 lb. gauge and tapping
- High presure range 75-100 lbs.
Set for 90 lbs. no flow pressure

Contract # 9
Transmittal #
Item #
Project
Subcontractor
Manufacturer
Supplier

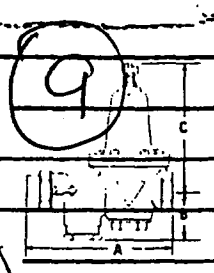

SPECIAL MODELS:
No. 5M3-Z6 - with water meter thread connections and 7½" lay length for new or existing meter box installations. For ⅝", ⅝" x ¾", or ¾" meter setters or resetters.
No. U5-Z9 - with ¾" NPT threaded male union inlet connection and ¾" NPT threaded female outlet connection.
Series U5B Sizes ½"- 2" has built-in thermal expansion by-pass equalizing feature to relieve thermal expansion in closed systems.
However, to be effective, the pressure relief setting of a relief valve must be higher than the available supply main pressure to the reducing valve. Latest allowable working pressure standards for gas and electric water heaters is 150 lbs. which exceeds the majority of supply pressures.

Size (Inches)	DIMENSIONS (Inches) A	B	C	Weight (lbs.)
* ½	5¾	1⅞	5	4
* ¾	6⅜	1⅞	5⅜	5
* 1	6¾	2	6	6
1¼	8	2¼	6⅛	9⅜
1½	9½	3	6¾	14⅛
2	11	3¼	9	23

*U5 available in ½", ¾" and 1" size only

FLOW CAPACITIES

Chart shows the flow capacities in gallons per minute based on average conditions and reduced pressure fall-off due to demand. For specific capacities under various flow conditions, send for F-U5.
Capacities shown are based on a difference of 50 lbs. or more between the initial pressure and the regulator lock-up pressure. Where this difference is less than 50 lbs., deduct 20% from capacity shown.

Series	½"	¾"	1"	1¼"	1½"	2"	2½"	3"	4"
~~U5, U5B~~	~~17~~	~~27~~	~~40~~	~~50~~	~~64~~	~~100~~			
25AUB	16	25	38	52	60	85	–	–	–
~~223~~	~~23~~	~~36~~	~~50~~	~~88~~	~~132~~	~~162~~	~~170~~	~~–~~	~~–~~
~~N223B~~	~~–~~	~~–~~	~~–~~				~~285~~	~~375~~	
~~N223F~~	~~–~~	~~–~~	~~–~~					~~210~~	
~~127W~~								~~250~~	~~300~~

For Additional Information, send for F-U5.

Series 25AUB

Bronze Body Water Pressure Regulator

For supply water pressures up to 300 lbs. and can be adjusted from 25 to 75 lbs. The standard setting is 50 lbs. The by-pass feature incorporated into these valves accurately controls build-up of system pressure and thermal expansion by equalizing the system and supply pressure when relief setting is in excess of available supply main pressure. NPT union inlet x female outlet.
Max. temperature 160°F.

- Renewable stainless steel seat
- Stainless steel integral strainer
- High temperature resisting reinforced diaphragm for hot or cold water

OPTIONS ½"- 2" (Suffix):
LP - Low pressure range 10-35 lbs.
Set for 30 lbs. no flow pressure.
Max. pressure 100 lbs., Max. Temp. 180°F.
S - with sweat union inlet x NPT outlet
G - with gauge tapping
GG - with gauge tapping and 0-160 lb. gauge
DU - with threaded union inlet and outlet
S-DU - Sweat union inlet and outlet
HP - High pressure range 75-125 lbs.
Set for 90 lbs. no flow pressure

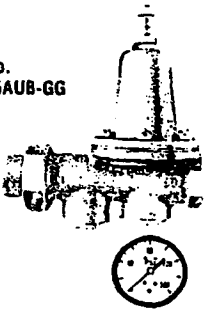

No. 25AUB-GG

Sizes ½" - 1"
Z3 - for waterworks pit installations. Has sealed spring cage and stainless steel adjusting and cage screws.
½"- 1"
Z7 - for 400 lb. max. initial pressure ¾" only
SC - sealed spring cage for hi-rise applications

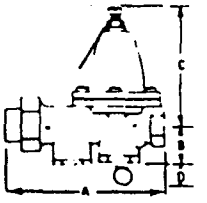

No.	Size (Inches)	DIMENSIONS (Inches) A	B	C	D	Weight (lbs.)
~~25AUB~~	½, ¾	5½	1¼	3⅞	2½	3½
25AUB	1	6	2	4	2½	6½
25AUB	1¼	8¾	2¼	5½	2½	10
25AUB	1½	9	2¼	5½	2½	10
25AUB	2	9¼	3¼	6¾	2½	15

For Additional Information, send for ES-25.

No. N250, N250B

Iron Body Water Pressure Reducing Valves

NPT female inlet and outlet.
Suitable for supply pressures up to 250 lbs.
Adjustable reduced pressure range 25-75 lbs.
No. N250B with built-in by-pass feature.
Sizes ½"- ¾".
No. N250 ¾" size only.

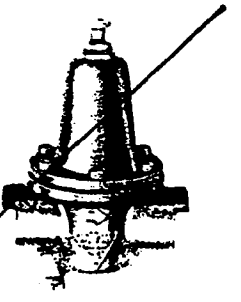

For Additional Information, send for S-N250.

No. 276H300

Water Pressure Test Gauge

Hose connection pressure gauge with high pressure indicator hand used for testing water supply pressure within a building.
¾" hose thread connection. 0-300 PSI.

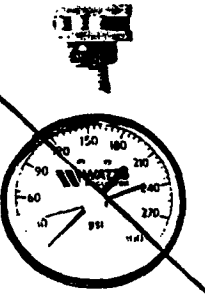

For Additional Information, send for ES-276H300.

PRV-40

GENERAL SERVICE DATA SERIES 25AUB

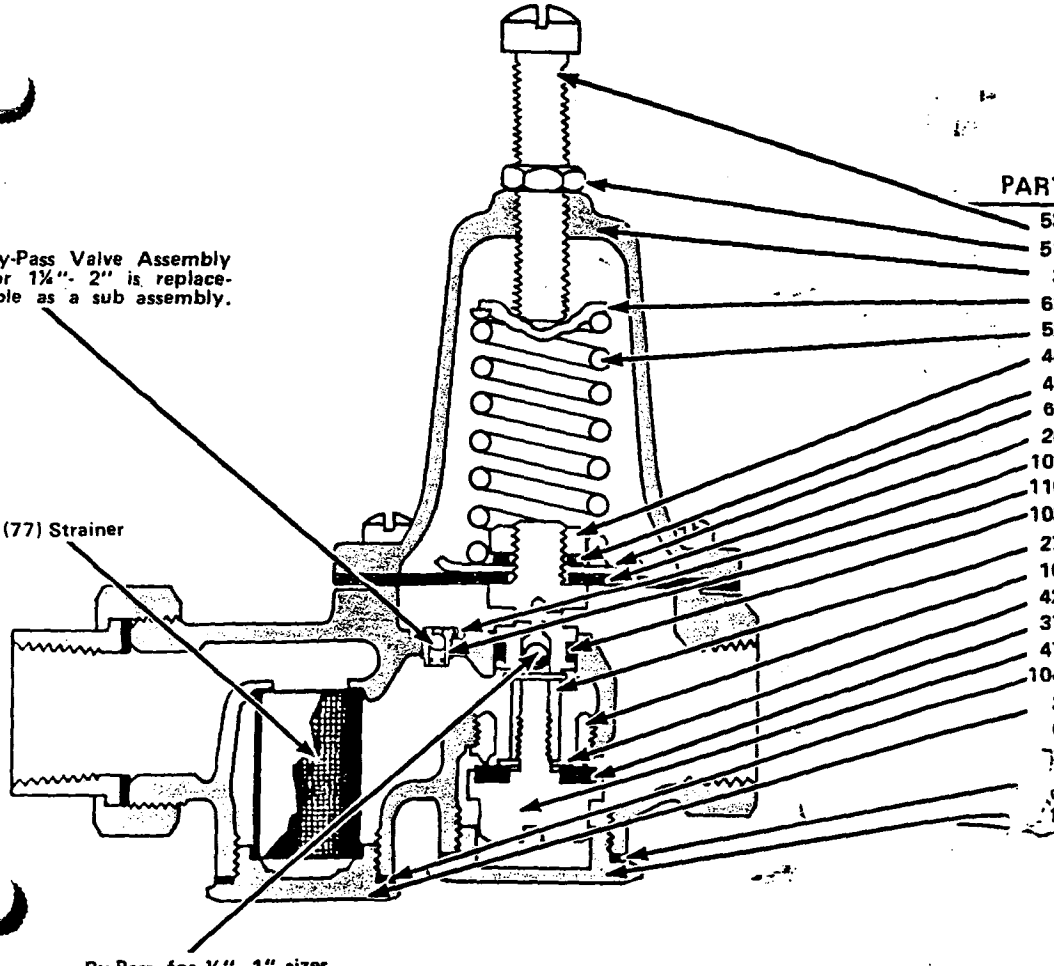

PART No.	DESCRIPTION
53	Adjusting Screw
51	Check Nut
3	Spring Cage
62	Spring Washer
52	Spring
48	Lock Nut
46	Lock Washer
60	Diaphragm Plate
20	† Diaphragm
102	*By-Pass Valve Gasket
116	*By-Pass Valve Assembly
103	† "O" Ring
27	Stem
16	† Seat
42	Washer
37	† Disc
47	Disc Holder
104	† Strainer Plug Gasket
2	Strainer Plug
6	**Ball
77	† Strainer
101	† Bottom Plug Gasket
12	Bottom Plug

MAINTENANCE INSTRUCTIONS

1. Remove bottom plug (12) and gasket (101).
2. Loosen disc holder (47) with screwdriver or socket wrench.
3. Inspect disc (37) and clean or replace.
4. Seat (16) can be removed, if necessary, with an Allen wrench or socket wrench.
5. Unscrew and remove adjusting screw (53), check nut (51), and spring cage screws. Lift off spring cage (3), spring washer (62), and adjusting spring (52).
6. Loosen and remove lock nut (48), washer (46), plate (60) and diaphragm (20).
7. Lift stem assembly (27), upwards to remove from body.
8. To reassemble valve, follow above instructions in reverse. Turn in adjusting screw for required reduced pressure adjustment.

Repair Kits

† Kit for No. 25AUB includes all items shown above.

Ordering Code No.	Kit No.	Size Inches
864941	½" 25AUB-RK	½
864943	¾" 25AUB-RK	¾
864942	1" 25AUB-RK	1
864944	1¼" 25AUB-RK	1¼
864945	1½" 25AUB-RK	1½
864946	2" 25AUB-RK	2

When Ordering, Specify:

1. Ordering Code Number
2. Size of Valve
3. Type Number
4. Model Shown on Nameplate

A LEADER IN VALVE TECHNOLOGY

WATTS® REGULATOR

Since 1874 — Watts Industries, Inc.

Water Products Division • Safety & Control Valves

USA: 815 Chestnut Street, North Andover, MA 01845-6098
Canada: 441 Hanlan Rd. Woodbridge, Ontario L4L 3T1

ISO 9001 CERTIFIED

LIMITED WARRANTY: Watts Regulator Company warrants each product against defects in material and workmanship for a period of one year from the date of original shipment. In the event of such defects within the warranty period, the Company will, at its option, replace or recondition the product without charge. This shall constitute the exclusive remedy for breach of warranty, and the Company shall not be responsible for any incidental or consequential damages, including without limitation, damages or other costs resulting from labor charges, delays, vandalism, negligence, fouling caused by foreign material, damage from adverse water conditions, chemicals, or any other circumstances over which the Company has no control. This warranty shall be invalidated by any abuse, misuse, misapplication or improper installation of the product. THE COMPANY MAKES NO OTHER WARRANTIES EXPRESS OR IMPLIED EXCEPT AS PROVIDED IN THIS LIMITED WARRANTY.

 ©Watts Regulator Co., 1996

MATERIALS

Bronze body construction
Renewable stainless steel seat
Stainless steel integral strainer
Reinforced Nordel diaphragm ½" - 1" (15 - 25mm)
Reinforced Buna diaphragm 1¼" - 2" (32 - 50mm)
Buna-N valve disc

Note: for LP models where application temperatures exceed 160°F (71°C) but not over 180°F (82°C), Teflon protector should be added to sizes 1¼", 1½", 2" (32, 40, 50mm)

PRESSURE-TEMPERATURE

Initial Pressure:
Suitable for supply pressures up to 300 psi (21.09 bar)

Reduced Pressure:
Adjustable reduced pressure range 25-75 psi (1.76-5.27 bar) Standard setting 50 psi (3.52 bar)

Maximum Temperature: 160°F (71°C)

STANDARDS

Meets requirements of ASSE Standard 1003; (ANSI A112.26.2); CSA Standard B356; Southern Standard Plumbing Code and listed by IAPMO.
Military Standard MIL-V-18146B Type I.

OPTIONS

Sizes ½" - 2" (15 - 50mm)
Suffix:
DU - Threaded female union inlet and outlet connections
G - Gauge tapping
GG - Gauge tapping and 160 psi (11.02 bar) gauge
HP - Hi-pressure range 75-125 psi (5.27-8.79 bar)
LP - Low pressure range of 10-35 psi (69-241 kPa). Set at 30 psi (207 kPa) no-flow pressure. Max pressure 100 psi (6.9 bar). Max temperature 160°F (71°C).
S - Solder union inlet x NPT female outlet connections.
S-DU - Solder union inlet and outlet connections.

Sizes ½", ¾", 1" (15, 20, 25mm)
Suffix:
SC - Sealed spring cage for hi-rise applications
Z3 - for waterworks pit installations. Has sealed spring cage and corrosion resistant adjusting & cage screws.
Z7 - for 400 psi (27.6 bar) initial pressure, ¾" (19mm) only.

CAPACITY

Sizes: ½", ¾", 1", 1¼", 1½", 2" (15, 20, 25, 32, 40, 50mm)

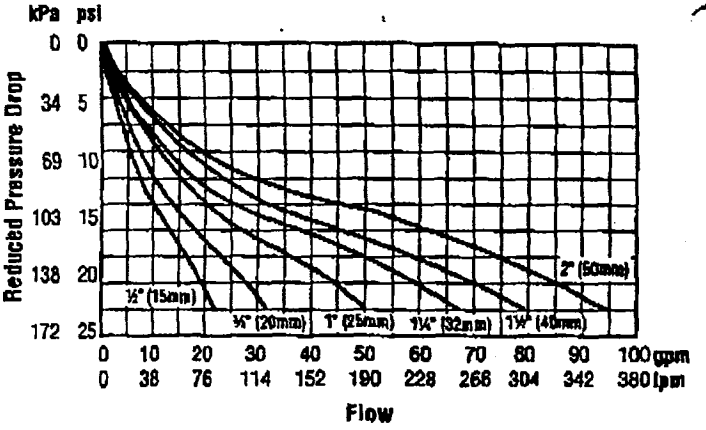

25AUB-DU or 25AUB-S-DU

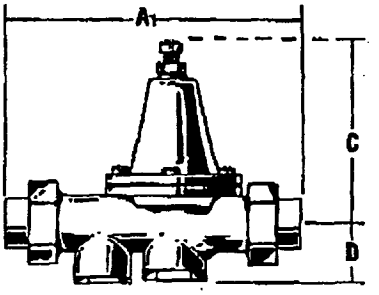

25AUB-GG

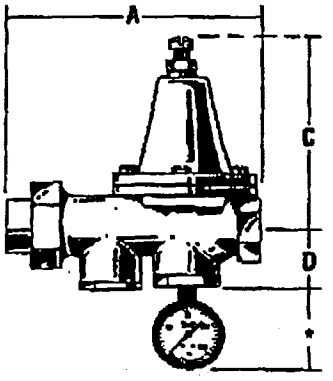

DIMENSIONS - WEIGHT

Size		Dimensions										Weight	
		A		A1		C		D		*			
in.	mm	in.	mm	in.	mm	in.	mm	in.	mm	in.	mm	lbs.	kg.
½	15	5½	140	6¾	171	3⅞	98	1¼	32	2½	64	3½	1.6
¾	20	5½	140	6¾	171	3⅞	98	1¼	32	2½	64	3½	1.6
1	25	6	152	7⅞	200	4	102	2	50	2½	64	6½	3.0
1¼	32	8¾	222	11	279	5½	140	2¼	57	2½	64	10	4.5
1½	40	9	229	11⅛	283	5½	140	2¼	57	2½	64	10	4.5
2	50	9¼	235	12½	318	6¾	172	3¼	83	2½	64	15	6.8

A LEADER IN VALVE TECHNOLOGY
WATTS® REGULATOR
Since 1874 — Watts Industries, Inc.
Water Products Division • Safety & Control Valves

USA: 815 Chestnut Street, North Andover, MA 01845-6098
Canada: 5435 North Service Road, Burlington, Ontario L7L 5H7

ISO 9001 CERTIFIED

© Watts Regulator Co., 1997
Printed in U.S.A.

Series 25AUB Regulators*

WATER PRESSURE REDUCING VALVES

Sizes: ½" to 2" (15 to 50 mm)
With integral strainer

Series 25AUB water pressure reducing valves are suitable for initial water pressures up to 300 psi (21.09 bar) and can be adjusted from 25 to 75 psi (172 to 517 kPa) delivery pressure to the system. The standard setting is 50 psi (345 kPa). They are standardly furnished with a bronze body, union threaded female inlet and female threaded outlet connection, stainless steel seat and strainer. All parts are easily and quickly serviceable without removing the valve from the line. The built-in by-pass prevents buildup of excessive system pressure caused by thermal expansion.

*A water saving test program concluded that reducing the supply pressure from 80 to 50 psi (551 - 346 kPa) resulted in a water saving of 30%.

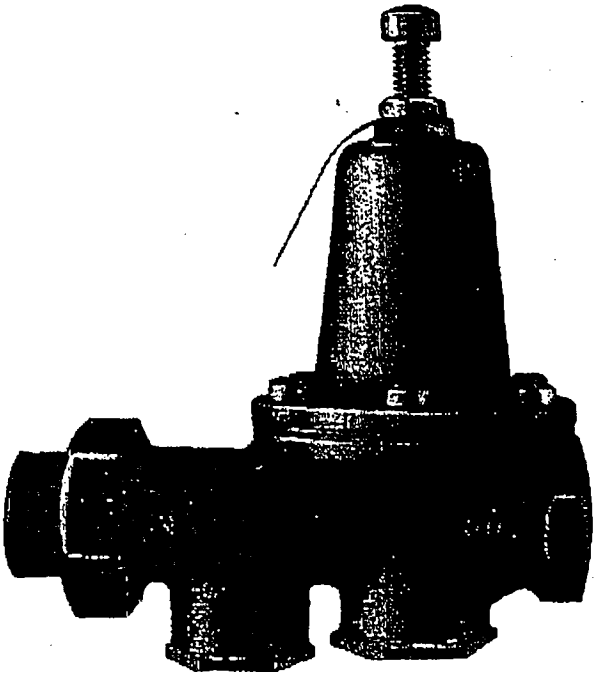

FEATURES

- **Union inlet connection**
- **Integral stainless steel strainer**
- **Renewable seat module**
- **Bronze body construction**
- **Serviceable in line**
- **Bypass feature controls thermal expansion pressure**
- **High temperature resistant reinforced diapgragm for hot water.**

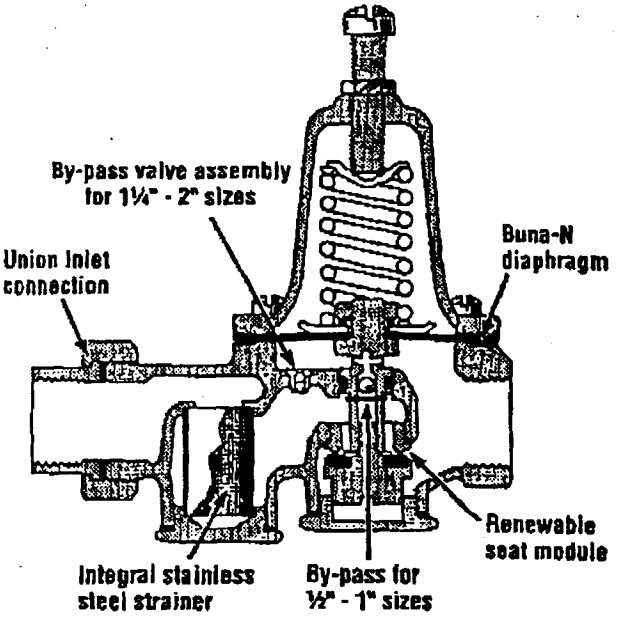

SPECIFICATIONS

When the supply main pressure exceeds 60 psi (413 kPa), an approved water pressure reducing valve and strainer shall be installed in the water service pipe near its entrance to the building to reduce the water pressure to 50 psi (345 kPa) or lower. Sill cocks and outside wall hydrants may be left on full main pressure at the option of the owner.

For service water systems up to and including 2" (50mm) provision shall be made to permit the by-pass flow of water around the valve back into the supply main when pressures, due to thermal expansion on the outlet side of the valve, exceed the pressure in the supply main. Pressure reducing valves with built-in by-pass check valves will be acceptable.

Approved valves shall comply with ASSE 1003 - Watts No. 25AUB.

NOTE: Watts product specifications in U.S. customary units and metric are approximate and are provided for reference only. For precise measurements, please contact Watts Technical Service. Watts reserves the right to change or modify product design, construction, specifications, or materials without prior notice and without incurring any obligation to make such changes and modifications on Watts products previously or subsequently sold.

A LEADER IN VALVE TECHNOLOGY
WATTS® REGULATOR
Since 1874 — Watts Industries, Inc.
Water Products Division • Safety & Control Valves
USA: 815 Chestnut Street, North Andover, MA 01845-6098
Canada: 5435 North Service Road, Burlington, Ontario L7L 5H7

PE, PT, PSH - ***

ERIES PRODUCT INFORMATION

Dresser Industries' Instrument Division has, to its credit, a number of innovations in the instrument field that spans more than 130 years. Since Edward Ashcroft first introduced the Bourdon tube to American Industry and Otto Heise developed the unique, "unitized" Bourdon tube, Dresser has been researching new methods and processes for measurement to meet the needs of industry.

Dresser Controls Operation continues this tradition as a supplier of highly reliable switches and controls for industrial and process applications under the Ashcroft trademark. We stress total value to the customer. We begin with rock-solid designs, matching the most appropriate technology with the safety and reliability requirements of the applications. The materials of construction are specified to Dressers' exacting standards and product is built to last in the toughest applications. Our modern, responsive manufacturing facility in Milford, Connecticut is supported by an extensive network of stocking distributors and factory sales offices located in virtually every part of the world. Special application assistance is always only a telephone call away.

Ashcroft's B-Series switch line is designed to satisfy most switch requirements. Materials of construction have been selected for long life. A wide variety of precision switch elements are available to meet every application requirement, including hermetically sealed contacts for added reliability and safety. The actuators we use have been proven in more than twenty years of service in the world's plants and mills. Special designs are available for fire safety, NACE, limit control and other more stringent requirements. Simplicity and

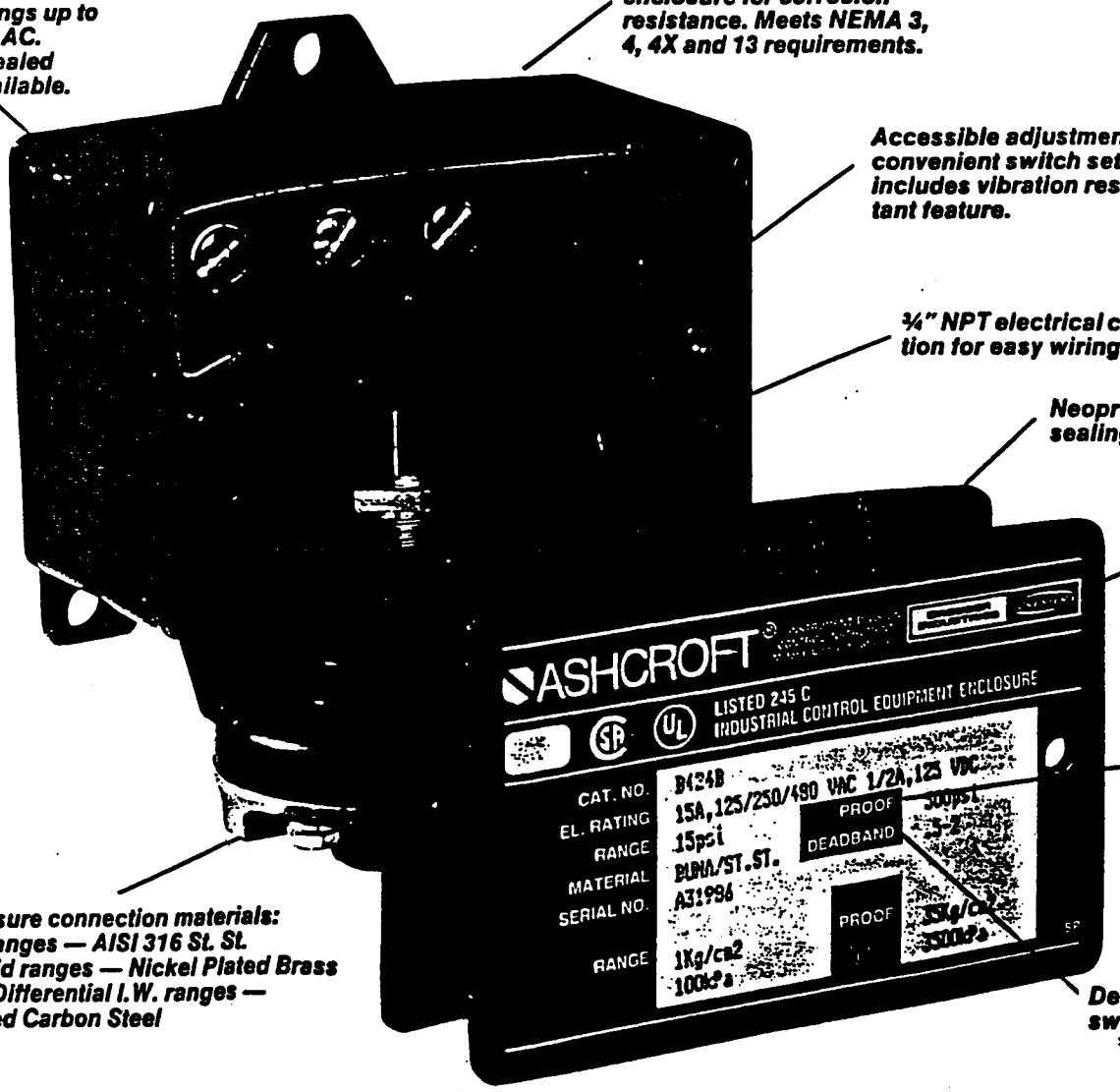

Type 400 Enclosure

UL and CSA listed instrument quality snap action switch for reliable operation. Ratings up to 10A DC or 20A AC. Hermetically sealed sw also available.

Epoxy-coated aluminum enclosure for corrosion resistance. Meets NEMA 3, 4, 4X and 13 requirements.

Accessible adjustment for convenient switch setting, includes vibration resistant feature.

¾" NPT electrical connection for easy wiring.

Neoprene gasket for sealing enclosure.

Nameplate and cove

High proof pressure.

Deadband limits for each switch.

l pressure connection materials:
Pressure psi ranges — AISI 316 St. St.
Differential psid ranges — Nickel Plated Brass
Pressure and Differential I.W. ranges — Epoxy Coated Carbon Steel

ease of use is stressed to improve reliability of the installation.

B-Series switches have proven reliable in such harsh environments as:

- Off Shore Oil Rigs
- Chemical and Petrochemical Plants
- Pulp and Paper Mills
- Steel Mills
- Power Plants
- Water and Sewage Treatment Plants
- Other Corrosive Environments

Applications include: pumps, compressors, washers, filters, degreasers, evaporators, recovery systems, food processing, ground support equipment, reverse osmosis systems, heat exchangers, hydraulic systems, lubrication systems, marine equipment, textile machinery, heating and air conditioning equipment.

Hermetically Sealed Switch

We recommend hermetically sealed switch elements for improved reliability. The Ashcroft hermetically sealed switch provides uncompromising contact protec tion in harsh or corrosive environments. It also satisfies requirements for installation in Division II hazardous areas.

Features:

- UL recognized component, guide WSQ2, File E85076
- All stainless steel welded construction

RECOMMENDED PRACTICE: All controls should be selected considering the media and ambient operating conditions. Improper application can be detrimental to the switch, cause failure and possibly personal injury or property damage.

The information in this catalog is offered as a guide to assist in making the proper selection of Ashcroft controls.

Additional information is available from Dresser Instrument Sales. Offices are listed on the back cover.

Type 700 Enclosure

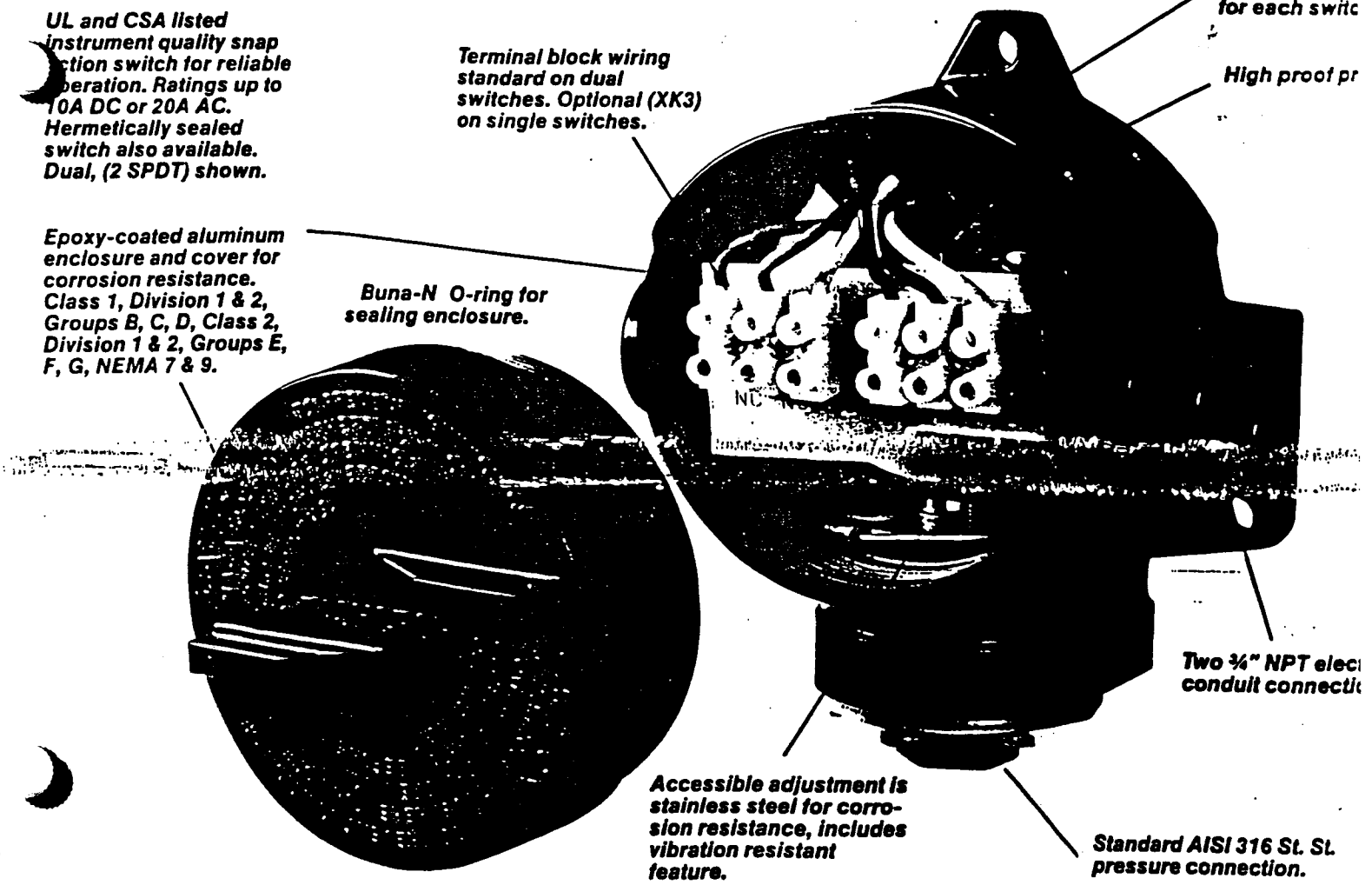

PRESSURE AND DIFFERENTIAL PRESSURE SWITCHES

B[illegible]es pressure, differential pressure an[illegible]cuum switches utilize two different actuators, depending on set point requirements. For set points between 2 and 3000 psi, the simple, rugged diaphragm sealed piston actuator is used. This design features high reliability and choice of actuator seal materials for virtually every application. An optional welded design is also available for set points up to 600 psi* for maximum reliability. This design is available in AISI 316 or Monel. Differential pressure models utilize a unique dual diaphragm sealed piston design that features very high static operating pressures and small size.

For set points between 4.5 and 150 inches of H_2O a large diaphragm is used for increased sensitivity in both pressure and differential pressure designs with good choice of materials of construction.

All standard models feature ±1 percent of range set point repeatability and a minimum of 400 percent of range proof pressures.

These standard designs perform well in applications where shock and vibration could be a problem and may be used in conjunction with Ashcroft diaphragm seals in extreme services such as slurries or abrasive process fluids.

*Consult factory for special models up to 1000 psi.

PRESSURE/VACUUM SWITCHES

Nominal Range[1]			Overpressure Ratings		Approximate Deadband[2] Switch Element				
			Proof psi	Burst psi	20, 26, 27	21, 24, 31	50	22	32
Vacuum									
-30" Hg	-760mm Hg	-100 kPa	250	400	.3-.7	1.5-3.0	.5-2.2	.4-1.0	2.1-4.2
Compound									
-15" H_2O/ 15" H_2O	-375mm H_2O/ 375mm H_2O	-3.7 kPa/ 3.7 kPa	20	35	.15-.75/ .15-.75	1.5-2.5/ 1.5-2.5	.45-2.0/ .45-2.0	.2-1.0/ .2-1.0	2.1-3.5/ 2.1-3.5
-30" H_2O/ 30" H_2O	-760mm H_2O/ 760mm H_2O	-7.5 kPa/ 7.5 kPa	20	35	.30-.60/ .30-.60	1.5-2.5/ 1.5-2.5	.45-2.0/ .45-2.0	.40-.85/ .40-.85	2.1-3.5/ 2.1-3.5
-30" Hg/ 15 psi	-760mm Hg/ 1.0 kg/cm²	-100 kPa/ 100 kPa	250	400	.5-1.0/ .3-.7	2.0-3.0/ .5-1.5	.75-2.5/ .5-1.0	.7-1.4/ .4-1.0	2.8-4.2/ .7-2.1
-30" Hg/ 30 psi	-760mm Hg/ 2.0 kg/cm²	-100 kPa/ 200 kPa	250	400	1.0-1.5/ .3-.8	3.0-6.0/ 1.0-2.0	1.2-4.5/ .7-1.5	1.4-2.1/ .4-1.1	4.2-8.4/ 1.4-2.8
-30" Hg/ 60 psi	-760mm Hg/ 4.0 kg/cm²	-100 kPa/ 400 kPa	250	400	2.0-3.0/ .7-1.5	5.0-9.0/ 3.0-5.0	2.5-7.0/ 1.1-4.0	2.8-4.2/ 1.0-2.1	7.0-12.0/ 4.2-7.0
P[illegible]e									
[illegible] H_2O	250mm H_2O	2.5 kPa	20	35	.2-.5	1.0-2.0	.35-1.5	.3-.7	1.4-2.8
[illegible]" H_2O	750mm H_2O	7.5 kPa	20	35	.3-.6	1.5-2.5	.45-2.0	.4-.85	2.1-3.5
60" H_2O	1500mm H_2O	15 kPa	20	35	.5-1.3	1.5-3.5	.9-2.5	.7-1.8	2.1-5.0
100" H_2O	2500mm H_2O	25 kPa	20	35	.6-1.6	2.5-5.5	1.1-4.0	.8-2.3	3.5-7.7
150" H_2O	3750mm H_2O	37 kPa	20	35	1.0-2.5	4.5-8.5	1.7-6.5	1.4-3.5	6.0-12.0
15 psi	1.0 kg/cm²	100 kPa	500	1500	.1-.35	.5-1.5	.2-1.0	.14-.50	.7-2.1
30 psi	2.0 kg/cm²	200 kPa	500	1500	.1-.50	.5-1.5	.3-1.0	.14-.70	.7-2.1
60 psi	4.0 kg/cm²	400 kPa	500	1500	.3-1.0	1.0-3.5	.7-2.5	.4-1.4	1.4-5.0
100 psi	7.0 kg/cm²	700 kPa	1000	3000	.5-1.7	1.5-5.0	1.1-3.5	.7-2.5	2.1-7.0
200 psi	14 kg/cm²	1400 kPa	1000	3000	1-3	5-13	2-9	1.4-4.5	7.0-18.2
400 psi	28 kg/cm²	2800 kPa	2400	3000	4-7.5	5-24	5.5-15	5.6-10.5	7.0-33.6
600 psi	42 kg/cm²	4200 kPa	2400	3000	4-11	9-30	7-20	5.6-15.4	12.6-42
1000 psi	70 kg/cm²	7000 kPa	12000	18000	7-30	30-110	18-70	10-42	42-154
3000 psi	210 kg/cm²	21000 kPa	12000	18000	15-60	80-235	37-160	21-84	112-329

DIFFERENTIAL PRESSURE SWITCHES

Differential

Nominal Range[1]			Pressure Ratings		Approximate Deadband Buna-N Diaphragm[2]				
			Static Working Pressure	Proof psi	20, 26, 27	21, 24, 31	50	22	32
30" H_2O	750mm H_2O	7.5 kPa	5.4	21.6	.3-.6	1.5-2.5	.45-2.0	.4-.8	2.1-3.5
60" H_2O	1500mm H_2O	15 kPa	5.4	21.6	.5-1.3	1.5-3.5	.9-2.5	.7-1.8	2.1-5.0
100" H_2O	2500mm H_2O	25 kPa	5.4	21.6	.6-1.6	2.5-5.5	1.1-4.0	.8-2.2	3.5-7.7
150" H_2O	3750mm H_2O	37 kPa	5.4	21.6	1.0-2.5	4.5-8.5	1.8-6.5	1.4-3.5	6.3-12.0
15 psid	1.0 kg/cm²	100 kPa	500	2000	.5-1.0	2.0-5.0	.7-3.5	.7-1.4	2.8-7.0
30 psid	2.0 kg/cm²	200 kPa	500	2000	1.0-2.0	2.0-5.0	1.5-3.5	1.4-2.8	2.8-7.0
60 psid	4.0 kg/cm²	400 kPa	500	2000	2.0-4.0	3.0-6.0	3.0-4.5	2.8-5.6	4.2-8.5
90 psid	6.0 kg/cm²	600 kPa	500	2000	3.0-8.0	5.0-10.0	4.0-9.0	4.0-10.0	6.0-15.0
100 psid	7.0 kg/cm²	700 kPa	1000	4000	4.0-10.0	11.0-20.0	7.0-15.0	7.0-15.0	16.0-28.0
200 psid	14.0 kg/cm²	1400 kPa	1000	4000	5.0-15.0	12.0-40.0	10.0-26.0	7.0-21.0	17.0-56.0
[illegible]0 psid	28.0 kg/cm²	2800 kPa	1000	8000	10.0-20.0	20.0-60.0	15.0-40.0	14.0-28.0	28.0-84.0
[illegible]sid	42.0 kg/cm²	4200 kPa	2000	8000	20.0-40.0	80.0-150.0	30.0-115.0	27.0-56.0	112.0-210.0

alue[illegible]own are for zero static working pressure.

NOTES:

Switches may generally be set between 15% and 100% of nominal range on increasing pressure. Consult factory for applications where set points must be lower.

2 All deadbands are given in English units as shown in the nominal range column. Deadbands shown are for switches with Buna N diaphragm. Approximate deadbands for optional diaphragms:

Viton: Multiply Buna N value by 1.4
Teflon: Multiply Buna N value by 1.2
Stainless Steel: Multiply Buna N value by 1.7
Monel: Multiply Buna N value by 1.7
Dual Switch Element: Multiply single switch element value by 1.6 for approximate deadband.

ORDER INFORMATION

B-SERIES PRESSURE AND DIFFERENTIAL PRESSURE SWITCH MODEL NUMBER:

To specify the exact switch desired select entries from appropriate tables as shown in example below.

1		2		3	4			5
B	4	2	0	B	X	P	K	600 PSI

1. ENCLOSURE

B4	Pressure switch, type 400, watertight enclosure meets NEMA 3, 4, 4X and 13 requirements.
B7	Pressure switch, type 700, explosion proof enclosure meets Div. 1 & 2, NEMA 7, 9 requirements.
D4	Differential pressure switch, type 400, water-tight enclosure meets NEMA 3, 4, 4X and 13 requirements.
D7	Differential pressure switch, type 700, explosion proof enclosure meets Div. 1 & 2, NEMA 7, 9 requirements.

3. ACTUATOR SEAL

Code & Material	Process Temperature[9] Limits °F	Range			
		VAC ~ H_2O	0-600 psi	1000 psi	3000 psi
B - Buna-N	0 to 150	●	●	●	●
V - Viton	20 to 300	●	●	●	
T - Teflon	0 to 150	●	●	●	●
S - St. St.[8]	0 to 300		●	●	
P - Monel[8]	0 to 300		●	●	

4. OPTIONS

Use table from page 9

5. RANGE

Select from table on page 4

2. SWITCH ELEMENT SELECTION

Order Code	Switch Elements UL/CSA Listed S.P.D.T.	
20[7]	Narrow deadband AC	15A, 125/250 VAC
21	Ammonia service	5A, 125/250 VAC
22[6]	Hermetically sealed switch, narrow deadband	5A, 125/250 VAC
23	Heavy duty AC	22A, 125/250 VAC
24[1]	General purpose ~ Dead band 1.5 - 5	15A, 125/250/480 VAC ½A, 125 VDC ¼A, 250 VDC; 6A, 30 VDC
25[2]	Heavy duty DC	10A, 125 VAC or DC, ⅓ HP, 125 VAC or DC
26[7]	Sealed environment proof	15A, 125/250 VAC
27	High temperature 300°F	15A, 125/250 VAC
28[5]	Manual reset trip on increasing	15A, 125/250 VAC
29[5]	Manual reset trip on decreasing	15A, 125/250 VAC
31	Low level (gold) contacts	1A, 125 VAC
32	Hermetically sealed switch, general purpose	11A, 125/250 VAC 5A, 30 VDC
42	Hermetically sealed switch, gold contacts	1A, 125 VAC
50	Variable deadband	15A, 125/250 VAC
	UL/CSA Listed Dual (2 SPDT)	
61[7]	Dual narrow deadband	15A, 125/250 VAC
62[7]	Dual sealed environment proof	15A, 125/250 VAC
63	Dual high temp. 300°F	15A, 125/250 VAC
64	Dual general purpose	15A, 125/250/480 VAC ½A, 125 VDC ¼A, 250 VDC
65	Dual ammonia service	5A, 125/250 VAC
67[4,6]	Dual hermetically sealed switch, narrow deadband	5A, 125/250 VAC
68[4]	Dual hermetically sealed switch, general purpose	11A, 125/250 VAC 5A, 30 VDC
71	Dual hermetically sealed switch, gold contacts	1A, 125 VAC

NOTES:

1 Standard switch.
2 Not available with PSID ranges.
3 Dual switches are 2 SPDT snap-action switches, *not* independently adjustable.
4 Not available with type 400 enclosure.
5 Not available with type 700 enclosure.
6 Estimated D.C. rating, 2.5A, 28 VDC (not UL listed).
7 Estimated D.C. rating, .4A, 120 VDC (not UL listed).
8 Available on pressure only.
9 Ambient operating temperature limits -20 to 150°F, *all styles, set point shift of ± 1% of range* per 50°F temperature change is normal.

INSTALLATION AND MAINTENANCE B400 AND B700 SERIES

ASHCROFT® SNAP ACTION SWITCHES FOR PRESSURE CONTROL

B400

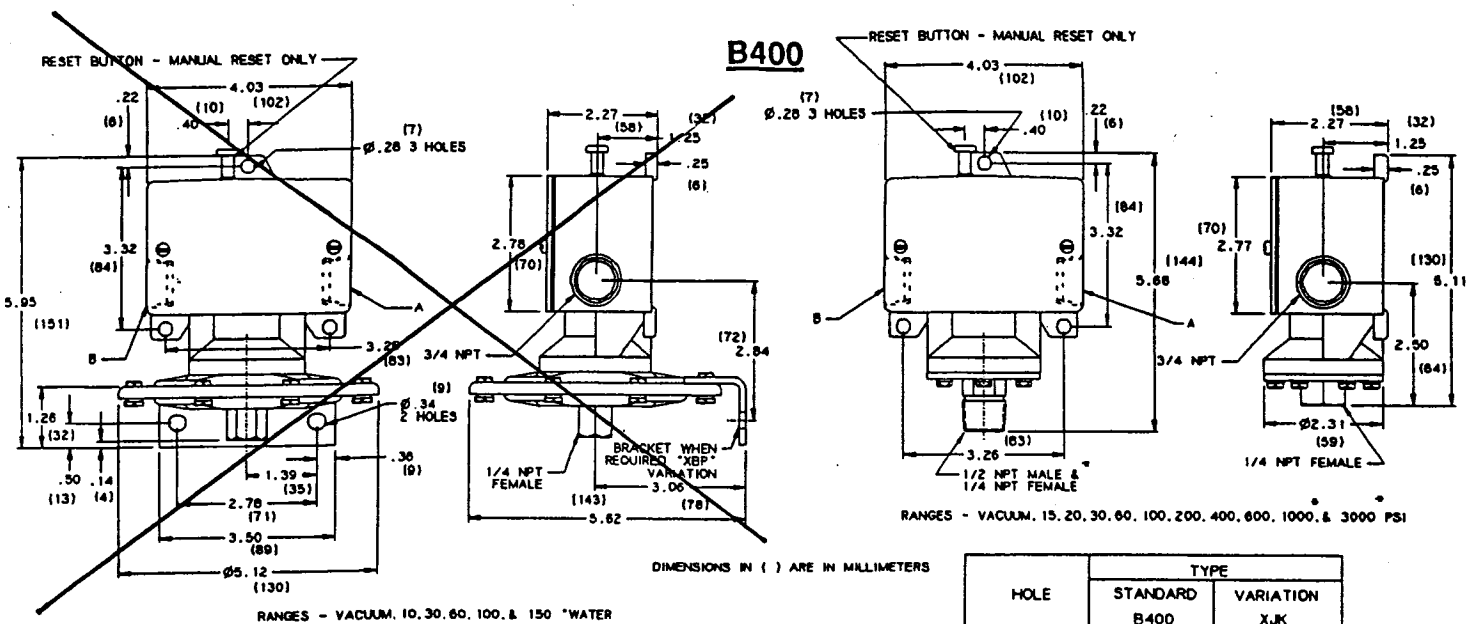

HOLE	TYPE	
	STANDARD B400	VARIATION XJK
A	3/4 NPT	3/4 NPT
B	OMIT	3/4 NPT

B700

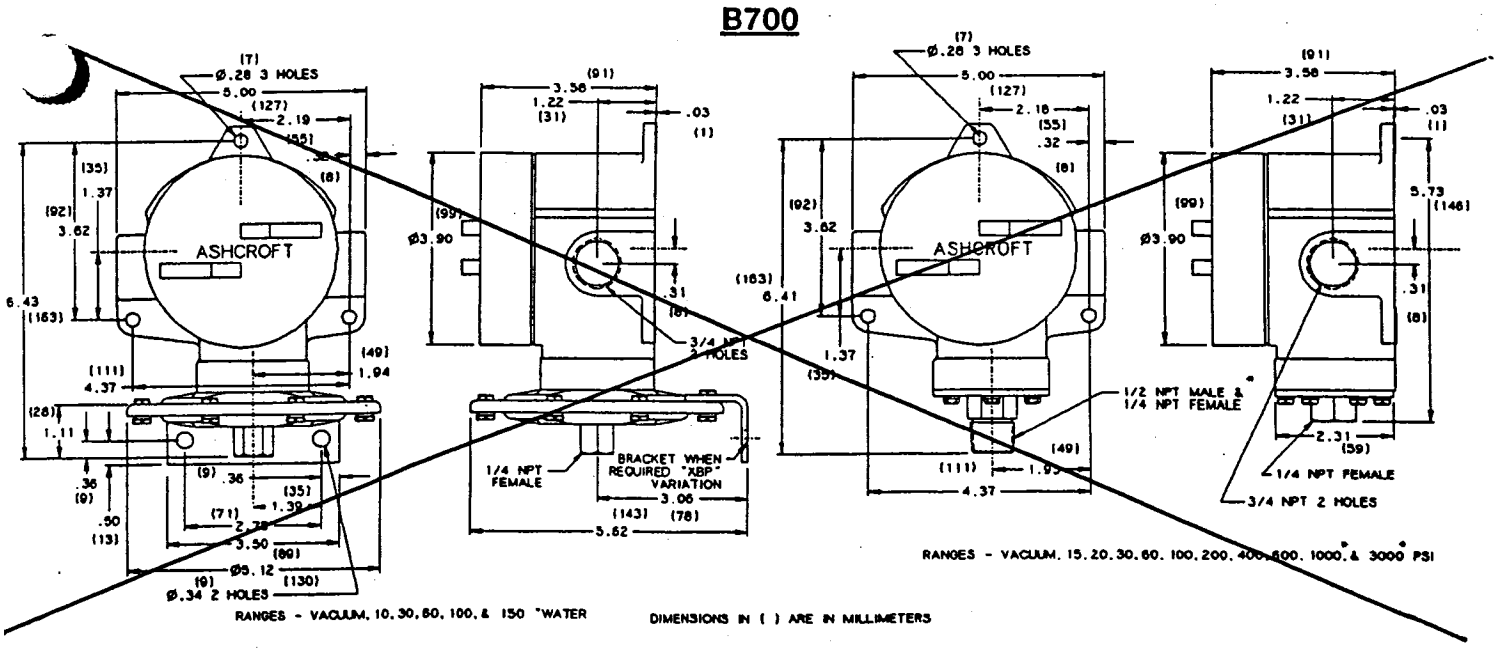

NTRODUCTION

he Ashcroft pressure switch is a precision built U.L., :.S.A., and F.M. approved control device which features a ıechanical snap action switch. Controllers are available ɔr ation on pressure or vacuum with fixed or variable iff l. Also, manual reset types are available for pe on increasing or decreasing pressure. The ıanual reset types remain tripped until reset by pressing a utton on the top of the enclosure. The standard electrical vitch is SPDT and is available with various electrical characteristics. Two SPDT switch elements mounted together are available except on variable deadband and manual reset types. Various wetted material constructions for compatibility with a wide range of pressure media may be obtained.

The Ashcroft snap action pressure switch is furnished in the standard NEMA 4 and explosion proof NEMA 7 and 9 enclosure styles. Both enclosures are epoxy coated aluminum castings.

INSTALLATION

These controls are precision instruments and should never be left with internal components exposed. During installation insure that covers are in place and conduit openings are closed except when actually working on the control.

MOUNTING B400 AND B700 SERIES

Three holes external to the enclosure for surface mounting. Location of these holes is shown on the general dimension drawing. They may also be mounted directly on pressure line using the pressure connection. **When tightening control to pressure line, always use the wrench flats or hex on the lower housing.**

ELECTRICAL CONNECTIONS

Remove cover
B400 Series — two screws hold cover to enclosure
B700 Series — cover unscrews

CONDUIT CONNECTIONS

NOTE — It is recommended that Teflon tape or other sealant be used on conduit, bushing or plug threads to ensure integrity of the enclosure.

B400 series standard — one ¾" NPT conduit hole right side.

B700 series standard — two ¾" NPT conduit holes with one permanent plug. NEMA 7 & 9 enclosures require proper conduit seals and breathers as per the National Electrical Code.

B400 & B700 series — XJL variation — two ¾" NPT conduit holes with two ¾" to ½" NPT reducing bushings.

B400 series — XJK variation — two ¾" NPT conduit holes.

B400 SERIES

1-SPDT — Wire directly to the switch according to circuit requirements. On controls with pilot lights wire lights according to circuit diagram on inside of cover. See special wiring instruction tag for single switches with two pilot lights and dual switches with one or more lights.

2-SPDT — Dual switching elements consist of two SPDT switches mounted together in a bracket. Switches are calibrated to have simultaneous operation within 1% of range either on increasing or decreasing pressure but not in both directions. Wire directly to the front and rear switch according to circuit requirements. Leads are provided on rear switch color coded as follows:

Common	— White
Normally Closed	— Red
Normally Open	— Blue

See SPDT instructions for pilot light hook-up.

When hermetically sealed switch elements (s) are supplied, the lead color coding is as follows:

Common	— White
Normally Closed	— Red
Normally Open	— Blue

B700 SERIES

SPDT — Wire directly to the switch according to circuit requirements.

2-SPDT — Wire to front switch terminal block (left) and rear switch terminal block (right) as marked. Strip insulation 5/16", insert in proper terminal connector and tighten clamping screw to secure.

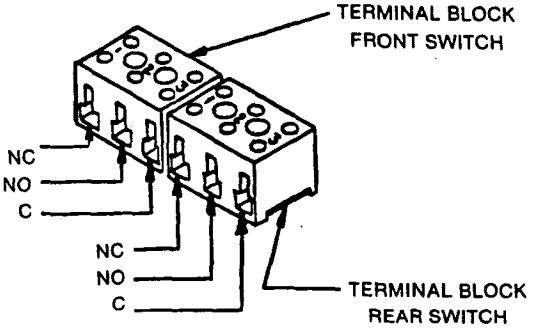

ADJUSTMENT OF SET POINT

B400 & B700 Series — A single set point adjustment nut (7/8") is located centrally at the bottom on the inside of the enclosure.

For accurate set point calibration, mount the switch on a calibration stand, a pump or catalog No. 1305 deadweight gauge tester. A suitable reference standard such as an Ashcroft Duragauge or Test Gauge is necessary to observe convenient changes in pressure.

As received, the pressure switch will normally be set to approximately 90% of the indicated range. Pressurize the system to required set point and turn the adjustment nut until switch changes mode. Direction of turning is indicated on a label affixed to the inside of the control enclosure. When set point has been achieved raise and lower pressure to insure that set point is correct.

After installation of the control replace cover to insure electrical safety and to protect internal parts from the environment.

B450 and B750 VARIABLE DEADBAND SWITCHES

Deadband is varied by rotating the wheel on the precision switch. When viewed from the front of the enclosure, rotation to the left increases deadband—rotation to the right decreases deadband. Letters on the wheel may be used as a reference. Deadbands obtainable will vary from 0.5% to 9% of pressure range depending on range segment and type of diaphragm.

ADJUSTMENT OF SET POINT

As received, the pressure switch will normally be set to approximately 90% of range. Rotate the wheel on the MICRO SWITCH all the way to the right; this will provide smallest deadband. Pressurize the system to the required set point and turn the adjustment nut until the switch changes mode. Lower the pressure to reset the switch. Rotate the wheel on the MICRO SWITCH until the desired deadband is obtained. The upper set point will be changing upward with this adjustment. Lower the pressure to reset the switch. Then increase the pressure to the desired set point and turn the adjusting nut until the switch changes mode. Lower the pressure and check reset point and deadband.

NOTE—As indicated above, adjustment of set point is made by use of 7/8" nut. Precision switch element mounting screws and bracket adjusting screw are factory sealed and should not be tampered with.

DRESSER INDUSTRIES

INSTRUMENT DIVISION
DRESSER INDUSTRIES INC.
STRATFORD, CONNECTICUT 06497

No. 250-2246-E

Printed in U.S.A.

V***-1

Chemtrol®
A DIVISION OF NIBCO INC.

PVC/CPVC HORIZON Ball Valve

150 psi at 73°F Water — Non-Shock

INST. NO. 29601808A-
Pg. 1

Installation and Maintenance Instructions

1/2" Thru 2" Ball Valves (Two-Piece Body)

Installation:

THREADED VALVES – Refer to the plastic threaded joining procedures outlined in the Chemtrol Thermoplastic Piping Technical Manual. CAUTION: DO NOT OVERTIGHTEN JOINTS, ONE TO TWO TURNS BEYOND HANDTIGHT WITH A STRAP WRENCH IS SUFFICIENT.

SOCKET VALVES – Refer to the solvent cement joining procedures outlined in the Chemtrol Thermoplastic Piping Technical Manual. CAUTION: PLACE BALL IN OPEN POSITION BEFORE JOINING. DO NOT ALLOW PURPLE PRIMER OR CEMENT TO CONTACT INTERNAL COMPONENTS OF THE VALVE.

Maintenance:

Horizon Ball Valves are factory assembled and self-adjusting. The valves require no maintenance and are not repairable. DO NOT ATTEMPT TO DISASSEMBLE. IF REPAIRS ARE NECESSARY, REMOVE VALVE FROM SYSTEM AND REPLACE WITH A NEW ONE.

To determine suitability of Chemtrol valves in your application, consult the Chemtrol Chemical Resistance Guide.

	Fluid Flow Coefficient
	Cv[2]
½"	29
¾"	70
1"	138
1½"	202
2"	307

[2] Cv values computed for basic Valve envelope length.

PRESSURE RATINGS OF CHEMTROL VALVES

The maximum pressure rating for Chemtrol valves, flanges, and unions, regardless of size, is 150 psi at 73°F. As with all other thermoplastic piping components, the maximum non-shock operating pressure is related to temperature. Above 100°F refer to the chart below.

Maximum Operating Pressure (psi) vs. Temperature

Operating Temperature (°F)	PVC	CPVC	PP*	PVDF*
100	150	150	150	150
110	135	140	140	150
120	110	130	130	150
130	75	120	118	150
140	50	110	105	150
150	N.R.	100	93	140
160	N.R.	90	80	133
170	N.R.	80	70	125
180	N.R.	70	50	115
190	N.R.	60	N.R.	106
200	N.R.	50	N.R.	97
250	N.R.	N.R.	N.R.	50
280	N.R.	N.R.	N.R.	25

N.R. — Not Recommended

*Not available in valve styles shown on this page.

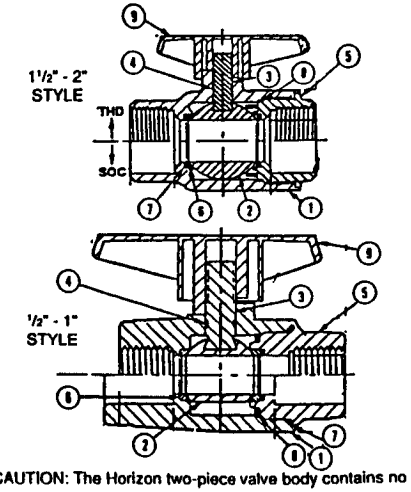

CAUTION: The Horizon two-piece valve body contains no field serviceable internal components. The parts listed below are provided for information only.

Item No.	COMPONENTS Description	Material
1.	Body	PVC or CPVC
2.	Ball	PVC or CPVC
3.	Stem	PVC or CPVC
4.	Stem O-Ring	FPM (Viton)
5.	Inlet	PVC or CPVC
6.	Seat (2)	TFE (Teflon)
7.	Seat O-Ring (2)*	FPM (Viton)
8.	Body O-Ring	FPM (Viton)
9.	Handle**	PVC

*½" - 1" only has (1) O-Ring under the inlet seat.

Do not use or test PVC Valves with compressed air or other gases. See Chemtrol Chem-Aire™ literature for information about a shatter-resistant thermoplastic piping system specifically designed for compressed air and other gases.

FOR SERVICE INFORMATION CALL
(800) 343-5455 OR (502) 775-6431

V***-1

V***-2

GLOBE 600

BRONZE

200 lb. SWP-400 lb. WOG† • Flow Control
Needle Point Bronze Stem
Threaded Bonnet • Gland Packed
Threaded Ends

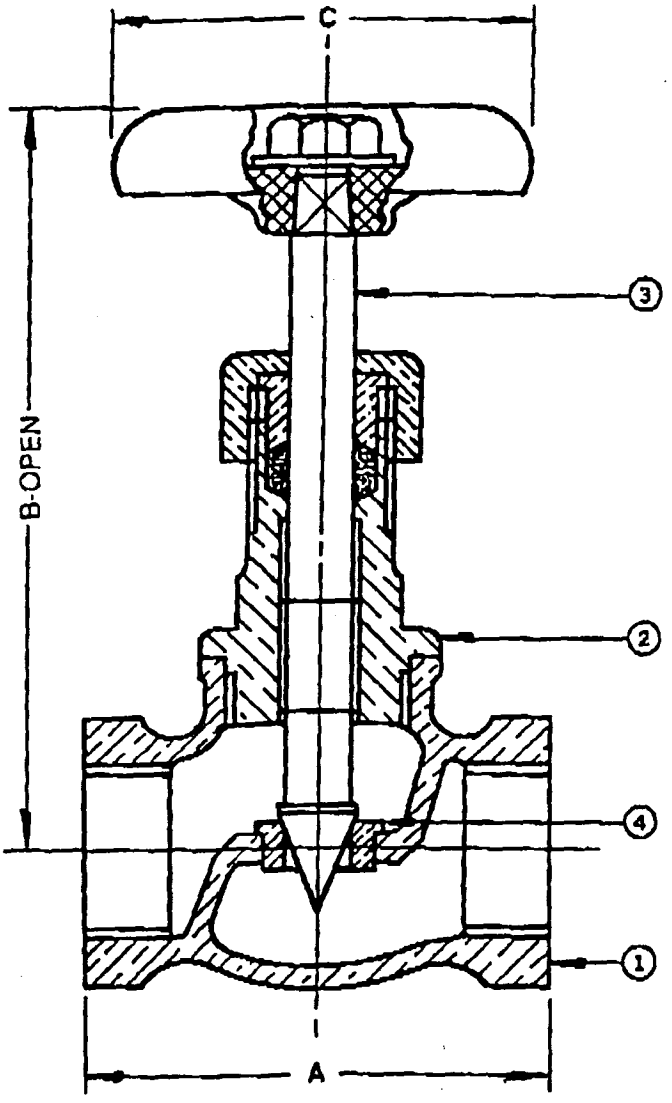

MATERIAL LIST

NO.	PART	MATERIAL
1	Body	Bronze
2	Bonnet	Bronze
3	Stem	Bronze
4	Seat Ring (Pressed In)	Commercial
5	Packing	Non-Asbestos
6	Gland	Commercial
7	Packing Nut	Commercial
8	Handwheel	Commercial
9	Identification Plate	Commercial
10	Handwheel Nut	Commercial

DIMENSIONS-INCHES

SIZE	A	B	C
1/8	1 5/8	3 3/16	2
1/4	1 5/8	3 3/16	2
3/8	1 13/16	3 3/16	2
1/2	2 5/16	3 5/8	2
3/4	2 9/16	3 15/16	2 1/4

†Non-Shock

1/91

INNOVATION IN EVERY VALVE

MILWAUKEE VALVE

BA-100/150 ¼ -3

V***-3

TWO-PIECE, STANDARD-PORT BRONZE

600 WOG - 150 SWP (1/4" - 2")
400 WOG - 150 SWP (2-1/2" - 3")

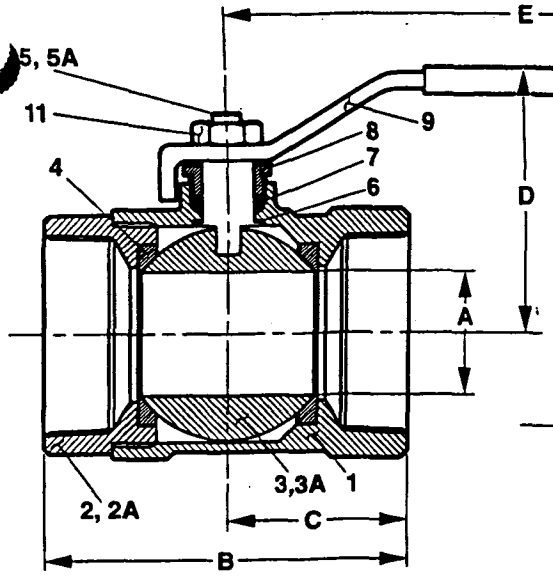

BA-100

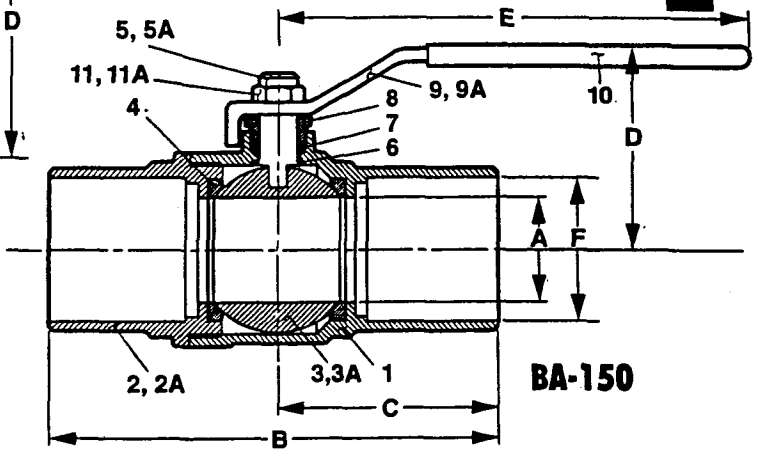

BA-150

MATERIALS LIST

ITEM	PART	MATERIALS	ASTM SPEC.
1	Body	Cast Bronze	B584
2	Tailpiece (1/4" - 3/4")	Brass Hex Rod	B16
2A	Tailpiece (1" - 3")	Cast Bronze	B584
3	Ball (BA-100/150)	Brass w/Hard Chrome Plating	B16
3A	Ball (BA-100S/150S)	Stainless Steel, Type 316	A276
4	Seal	Reinforced PTFE, 15% Glass Filled	
5	Stem (BA-100/150)	Brass Round Rod	B16
5A	Stem (BA-100S/150S)	Stainless-Steel Round Bar, Type 316	A276
6	Washer	Reinforced PTFE, 15% Glass Filled	
7	Packing	PTFE	
8	Packing Nut	Brass Hex Rod	B16
9	Handle	Steel w/Zinc Coating	B633
10	Hand Grip	Vinyl	
11	Handle Nut	Steel w/Zinc Coating	B633

PRESSURE – TEMPERATURE CHART

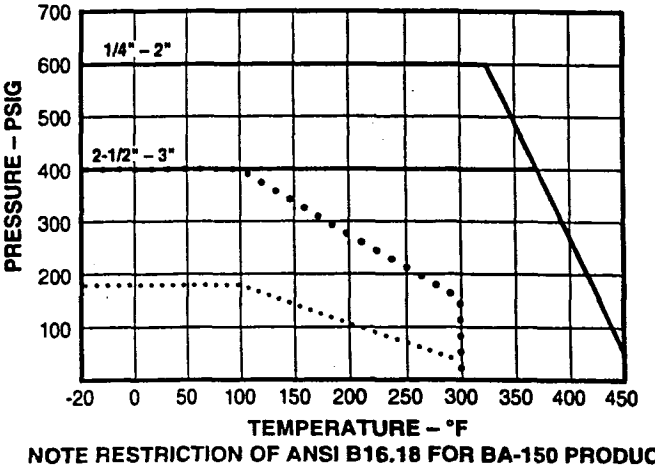

NOTE RESTRICTION OF ANSI B16.18 FOR BA-150 PRODUCTS:

• **95/5 TIN/ANTIMONY SOLDER**

. . . . . **50/50 TIN/LEAD SOLDER**

NOTE: VALVES RATED FOR VACUUM SERVICE TO 29.9 INCHES OF MERCURY.

DIMENSIONS

VALVE SIZE	INCHES / MILLIMETERS	1/4 / 6.4	3/8 / 9.5	1/2 / 13	3/4 / 19	1 / 25	1-1/4 / 32	1-1/2 / 38	2 / 51	2-1/2 / 64	3 / 76
A	INCHES	0.38	0.38	0.50	0.69	0.89	1.06	1.31	1.56	2.28	2.68
	MILLIMETERS	9.7	9.7	13	18	23	27	33	40	58	68
B (BA-100)	INCHES	1.97	1.97	2.19	2.53	3.18	3.50	3.97	4.30	5.56	6.16
	MILLIMETERS	50	50	56	64	81	89	101	109	141	156
B (BA-150)	INCHES	-	2.05	2.39	3.18	3.67	4.50	5.00	6.25	7.34	8.17
	MILLIMETERS	-	52	60	81	93	114	127	159	186	208
C (BA-100)	INCHES	0.98	0.98	1.10	1.30	1.59	1.75	1.97	2.15	2.78	3.10
	MILLIMETERS	25	28	33	40	44	50	55	71	79	68
C (BA-150)	INCHES	-	0.91	1.07	1.44	1.76	2.25	2.50	3.13	3.67	4.08
	MILLIMETERS	-	23	28	37	45	57	64	80	93	104
D	INCHES	1.80	1.80	1.88	2.14	2.30	2.71	2.90	3.09	3.89	4.19
	MILLIMETERS	46	46	48	54	58	69	74	79	100	106
E	INCHES	3.81	3.81	3.81	4.62	4.62	6.31	6.31	7.19	7.19	7.19
	MILLIMETERS	97	97	97	117	117	160	160	183	183	183
F	INCHES	-	0.50	0.63	0.88	1.13	1.38	1.63	2.13	2.63	3.13
	MILLIMETERS	-	13	16	22	29	35	41	54	67	80
C_v (GPM)		7	7	10	25	40	52	90	115	390	440

FIGS: B-40 B-240

SEE PAGE 44 FOR PRESSURE-TEMPERATURE RATINGS.

SERVICE FEATURES

Body seats may be reground without removing valve body from pipeline. Union bonnet design provides means of repeated replacement without impairing bonnet joint.

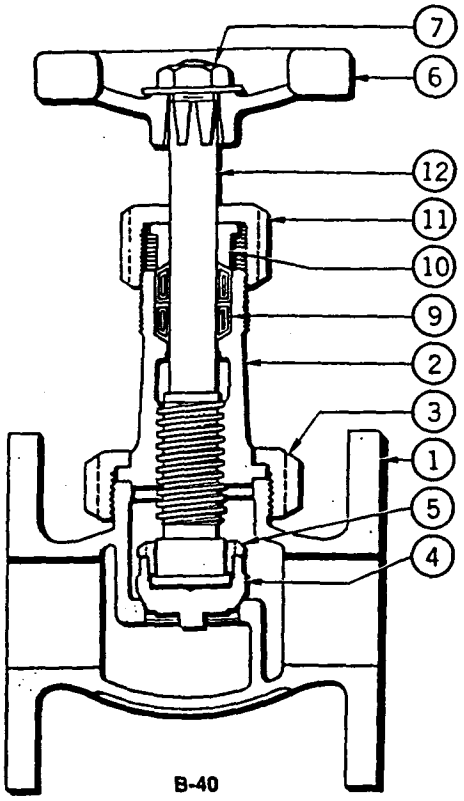

B-40

NO.	DESCRIPTION	MATERIAL	ASTM SPEC.	UNS NO.
1	BODY	BRONZE	B-62	C83600
2	BONNET	BRONZE	B-61	C92200
3	BONNET RING	BRONZE	B-61	C92200
*4	DISC (¾-2½)	BRONZE	B-61	C92200
5	DISC NUT	BRASS (¾-1)	B-16	C36000
		BRONZE (1¼-2½)	B-61	C92200
6	HANDWHEEL	MALL. IRON	A-197	F22000
7	HANDWHEEL NUT	STEEL EZP		
9	PACKING	KEVLAR FIBERS W/TEFLON® NONASBESTOS		
10	PKG. GLAND	BRASS		
11	PKG. NUT	BRONZE	B-584	C84400
12	STEM	COPPER-SILICON BRONZE	B-371	C69400
† 13	STEM-DISC (½)	COPPER-SILICON BRONZE	B-371	C69400

* Size 1/2 integral with stem
† Not Shown

Conforms to MSS-SP-80 Type 1

Contract # 7
Transmittal #
Item #
Project
Subcontractor
Manufacturer
Supplier

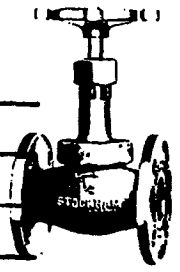

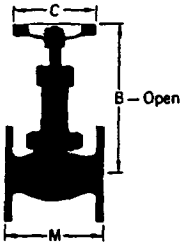

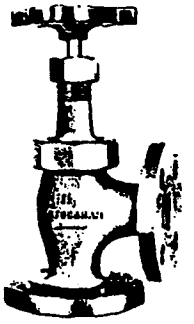

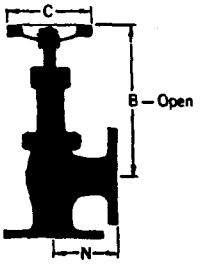

B-40, GLOBE, FLANGED ENDS
B-240, ANGLE, FLANGED ENDS

SIZE	WGT.	B	C	M	N
*½	3.2	4.75	2.75	3.00	2.19
¾	5.1	5.81	2.75	3.69	2.44
1	6.8	6.44	3.25	4.19	2.63
1¼	9.4	7.38	4.00	4.56	2.88
1½	12	8.16	4.75	5.31	3.19
2	19	9.56	5.50	6.00	3.75
2½	29	10.28	6.00	6.75	4.31

* B-240—Not available in this size

STOCKHAM.
YOUR WORLDWIDE CONNECTION.

CORPORATE HEADQUARTERS

Box 10326 • Birmingham, AL 35202, U.S.A. • 205/592-6361
FAX: 205/591-1300 • FAX #2: 205/595-3304
For Customer Service only: 1-800-STOCKHAM

SALES OFFICES OUTSIDE U.S.A.

STOCKHAM VALVE LTD.
Yiewsley Grange
High Street, Yiewsley
Middlesex UB7 7QP
ENGLAND
Phone: 44-0895-445118
TLX: 21379 STKHAM G
FAX: 44-0895-444348

STOCKHAM VALVE SINGAPORE PTE. LTD.
Loyang Crescent
Loyang Offshore Supply Base
Singapore 1750
Phone: 65 543-0522
FAX: 65 543-0559

STOCKHAM VALVE AUSTRALIA PTY. LTD.
Settlement Road,
P.O. Box No. 48
Thomastown, Victoria
AUSTRALIA, 3074
Phone: 61-03-465-2755
FAX: 61-03-466-1365

STOCKHAM MISSION JAPAN CO., LTD.
Shugetsu Bldg. 3F
3-12-7, Kita Aoyama,
Minato-Ku
Tokyo, Japan 107
Phone: 3-3486-7600
FAX: 3-3486-7601

Contact Our Representative:

Technical information and illustrations included are subject to change without notice.

Catalog PF-95
1/95

Copyright 1995 Stockham

MATERIALS The basic bronze pressure-containing parts conform to either the American Society for Testing and Materials Specifications B-61 or B-62. Materials for each valve part are listed in this catalog section. A full description of the materials is in the "Material Specifications" section.

PRESSURE-TEMPERATURE RATING NONSHOCK The pressure classes available have these rated working pressures:

	PRESSURE–PSI[6,8]					
Press. Class	125[4,5]	150		200[5]	300	
End Conn.	THD	THD	FLG[2]	THD	THD[7]	FLG[2]
Temp.[1]	MATERIAL					
(Deg. F)	ASTM B-62			ASTM B-61		
-20 To 150	200	300	225	400	1000	500
200	185	270	210	375	920	475
250	170	240	195	350	830	450
300	155	210	180	325	740	425
350	140	180	165	300	650	400
400	-	-	-	275	560	375
406	125	150	150	-	-	-
450	120[3]	145[3]	-	250	480	350
500	-	-	-	225	390	325
550	-	-	-	200	300	300

Notes: 1–For lower temperatures, Pressures for Temperatures –20 to 150 shall apply–Uses for low temperature shall conform to the rules of Applicable Codes under which they are to be used.
2–P-T Ratings–ANSI B16.24-1971.
3–Some codes (i.e.–ASME BPVC, Section I) limit the rating temperatures of the indicated material to 406°F.
4–Buna-N Disc Valves limited to 150°F Temperatures.
5–Teflon® Disc Valves limited to 450° F Temperatures.
6–Solder End Valves are limited by temperatures which affect the strength of the solder joint. These ratings must be adjusted as below.
7–Bolted Bonnet Valves have maximum CWP rating of 600 psi and 300 psi at 550°F.
8–Internal pressures great enough to burst castings can be developed during the formation of ice. Valves should be protected so that contained media does not freeze.

ADJUSTED PRESSURE RATINGS

Joints made of Copper Tube and Solder End Valves
(Pounds per square inch)
Extracted from MSS-SP-80

SOLDER USED IN JOINTS	SERVICE TEMPERATURE DEGREES F	WATER, including other noncorrosive liquids and gases			SATURATED STEAM
		Valve Sizes			(psig)
		¼" through 1"	1¼" through 2"	2½" through 4"	Valve Sizes ¼" through 4"
50-50 Tin-Lead (ASTM B-32, Alloy Grade 50-A)	100	200	175	150	–
	150	150	125	100	–
	200	100	90	75	–
	250	85	75	50	15*
95-5 Tin-Antimony	100	500	400	300	–
	150	400	350	275	–
	200	300	250	200	–
	250	200	175	150	15*

*This pressure is determined by the temperature of saturated steam at the maximum temperature shown.

Stockham bronze valves have been specified, installed, and are proven performers in commercial and industrial facilities throughout the United States and the free world. The broadness and unsurpassed quality of the Stockham line appeal to consulting engineers, mechanical contractors, and industrial users alike.

DESIGN: GATE VALVES–CLASSES 125, 150, 200, AND 300.

Handwheel–Malleable handwheels dissipate heat rapidly and are accurately fitted to stems.

Nameplate–Aluminum nameplates are used for valve identification.

Stem–Copper-silicon bronze stems have excellent corrosion resistance with high strength.

Stuffing Box–Maximum packing life is assured with nonasbestos packing. Glands compress packing evenly.

Bonnet–Bonnets are either the threaded, union, or bolted type.

Disc–All discs are the tapered wedge type, either solid or split. Disc guides assure alignment and minimize friction on seats. Split wedge discs have ball-to-ball joints to provide angular adjustment to body seats. Discs are completely out of the line of flow when valves are open.

Body–Bodies have guides for close, accurate disc travel. Threaded pipe ends conform to the ANSI/ASME B.1.20.1. Most threaded end valves can be bored for silver brazed end connections. Add SB to figure number for silver brazed ends. Socket brazed ends are used with bronze or steel pipe. See socket brazed valve dimensions in the Engineering Data section. Solder ends conform to the ANSI Standard for Solder Joint Fittings B16.18. They are suitable for use with Types K, L, and M copper tubing handling nonflammable materials. End flanges of flanged valves are faced and drilled to meet ANSI B16.24, the standard covering Classes 150 and 300 brass or bronze flanges and flanged fittings.

DESIGN: GLOBE AND ANGLE VALVES–CLASSES 125, 150, 200, AND 300.

Handwheel–Heat-dissipating malleable handwheels are accurately fitted to stems.

Nameplate–For identification, aluminum nameplates are used. This simplifies parts replacement.

Stem–Copper-silicon bronze stems provide excellent corrosion resistance and high strength.

Bonnet–Bonnets are either threaded, union, or bolted type. Ample packing chamber depth with adequate nonasbestos packing is provided for maximum life.

Seat Ring–Renewable seats are furnished on most Classes 150, 200, and 300 valves. The materials for each valve in this catalog are clearly specified.

Disc–Discs may be nonmetallic (Teflon,® Buna-N, etc.) or metal, plug, fullway, or needle-type. The available materials are noted on each valve page.

Body–Bodies are designed for easy flow with ample wall sections for adequate strength. Threaded pipe ends conform to the ANSI/ASME B1.20.1. Most threaded end valves can be bored for silver brazed end connections. Solder ends conform to ANSI Standard for Solder Joint Fittings B16.18. They are used with Types K, L, and M copper tubing handling nonflammable materials.

End flanges of flanged valves are faced and drilled to meet ANSI B16.24, the standard covering Classes 150 and 300 brass or bronze flanges and flanged fittings.

NONRISING STEM • INSIDE SCREW
SOLID WEDGE DISC

BRONZE VALVE

SEE PAGE 44 FOR PRESSURE-TEMPERATURE RATINGS.

SERVICE FEATURES

Recommended for general purpose shutoff services, fully open or closed. Nonrising stem particularly suitable for installation in pipelines with low headroom.

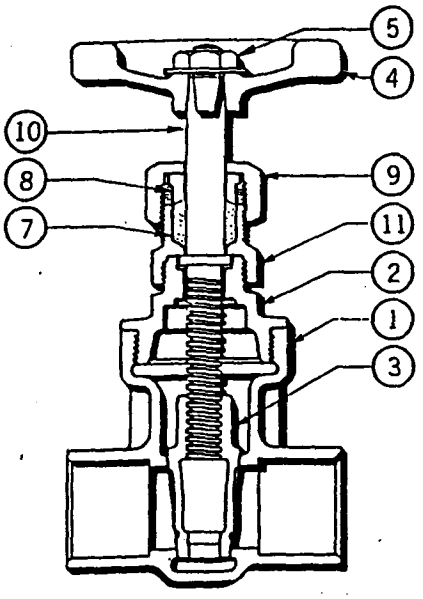

B-104

NO.	DESCRIPTION	MATERIAL	ASTM SPEC.	UNS NO.
1	BODY	BRONZE	B-62	C83600
2	BONNET	BRONZE	B-62	C83600
3	DISC	BRONZE	B-62	C83600
4	HANDWHEEL	MALL. IRON	A-197	F22000
5	HANDWHEEL NUT	STEEL EZP		
*7	PACKING (½-3)	KEVLAR FIBERS W/TEFLON® NONASBESTOS		
8	PKG. GLAND (½-3)	BRASS		
9	PKG. NUT	BRONZE	B-584	C84400
10	STEM	COPPER-SILICON BRONZE	B-371	C69400
11	STUFFING BOX	BRONZE	B-584	C84400

* Packing for sizes 1/4 and 3/8 is acrylic and Novaloid fibers with Teflon® nonasbestos.

Conforms to MSS-SP-80 Type 1

Contract # _____
Transmittal # 3
Item # _____
Project _____
Subcontractor _____
Manufacturer _____
Supplier _____

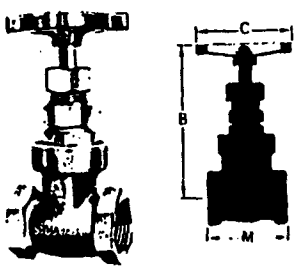

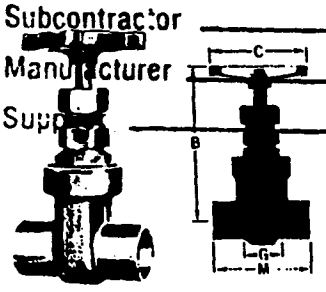

B-103, THREADED ENDS

SIZE	WGT.	B	C	M
¼	.6	3.19	1.75	1.75
⅜	.6	3.19	1.75	1.81
½	.9	3.50	2.00	2.13
¾	1.5	4.13	2.38	2.31
1	2.2	4.88	2.75	2.63
1¼	3.0	5.50	3.00	2.94
1½	4.2	6.38	3.25	3.13
2	6.6	7.56	3.75	3.63
2½	9.3	8.94	4.50	4.00
3	13	9.94	5.00	4.38

† B-104, SOLDER ENDS

SIZE	WGT.	B	C	G*	M
⅜	.5	3.19	1.75	.72	1.47
½	.8	3.50	2.00	.75	1.75
¾	1.4	4.13	2.38	.97	2.47
1	1.8	4.88	2.75	1.00	2.81
1¼	2.7	5.50	3.00	1.19	3.13
1½	4.0	6.38	3.25	1.31	3.50
2	5.8	7.56	3.75	1.44	4.13
2½	8.7	8.94	4.50	1.63	4.56
3	12	9.94	5.00	1.75	5.06

† Saturated steam pressure for solder end valves should not exceed 15 PSI.
* Piping Make-Up Dimension

YS-***

CAST BRONZE SELF CLEANING "Y" TYPE STRAINERS

Contract # _____

Transmittal # 8

Item # _____

Project _____

Subcontractor _____

Manufacturer _____

Supplier _____

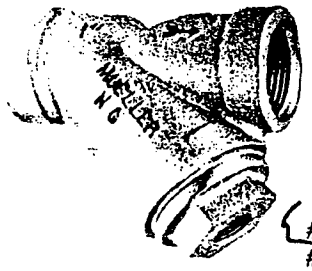

#351M 150 lb. ANSI Screwed Ends (shown)
#352M 250 lb. ANSI Screwed Ends
#353½M Solder Ends

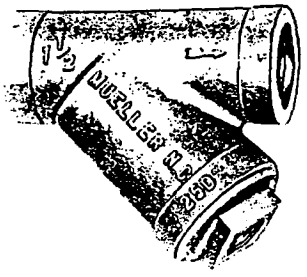

352½ Sil-Braze Ends

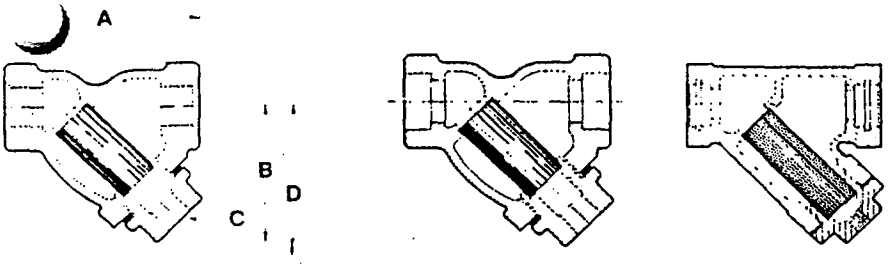

351M and 352M — 353½M — 352½

WORKING PRESSURES, NON SHOCK

	STEAM	WATER-OIL-GAS
351M	150 PSI @ 350°F	200 PSI @ 150°F
352M	300PSI @ 350°F	400 PSI @ 150°F
353-½M	175 PSI @ 250°F	200 PSI @ 150°F
352-½	250 SWP @ 425°F	

SERVICE RECOMMENDATIONS

These compact strainers can be used extensively to strain foreign matter from pipelines and provide inexpensive protection for costly pumps, meters, valves, and similar equipment.

FEATURES

In addition to the usual commercial applications the 352-½ is in complete accordance with Military specifications and conforms to the latest revision of BuShip Drawing 80064-810-841499. Unless otherwise specified all sizes of Model 352-½ are furnished grooved, less rings.

CONSTRUCTION

All models have machined screen seats in the body and cap to assure perfect screen alignment and easy re-assembly when servicing is required. Military strainers are furnished in ASTM B-61 bronze; commercial strainers in ASTM B-62 bronze. All sizes feature a straight threaded, gasketed cap.

BLOWOFFS

Unplugged, NPT blowoff connections are provided for commercial strainers. BuShip Drawing 80064-810-841499 strainers are supplied without blowoff connections. See Chart below for blowoff plug sizes in inches.

SCREENS

Models 351M and 352M are furnished with .033" (.84mm) perforated stainless steel screen for steam service; 20 mesh [1/32" (.80mm) openings] for water service.
Model 353-½M is furnished with 3/64" (1.2mm) perforated stainless steel screens for steam and 1/16 (1.6mm) perforations for water service.
Model 352-½ strainers are furnished with perforated stainless screens with .062" (1.6mm) holes through 2" (50mm) size; .093" (2.36mm) for larger sizes.

PRESSURE DROP: Consult factory.

MATERIALS:

351M, 352M, 353-½M, 352-½ (commercial)

Body and Cap	Bronze ASTM B62
Screen	304 SS ASTM A240
Gasket	Non-asbestos

352-½ (military)

Body and Cap	Bronze ASTM B61
Screen	304 SS ASTM A240
Gasket	Copper

DIMENSIONS and WEIGHTS APPROXIMATE

Apply for certified drawings

	SIZE	in. / mm.	¼" / 8	⅜" / 10	½ / 15	¾ / 20	1 / 25	1-¼ / 32	1-½ / 40	2 / 50	2-½ / 65	3 / 80	4 / 100
A	351M, 352M, 353-½M	in.	2-¾	2-¾	2-¾	3	3-¾	4-7/16	4-15/16	6-⅛	8-¼	9	—
		mm	70	70	70	76	95.3	113	125	156	210	229	—
	352-½	in.	2-9/16	2-9/16	2-15/16	3-⅜	4-⅛	4-15/16	5-⅜	6-⅜	7-⅞	11-¾	15-3/16
		mm	65	65	75	86	105	122	137	168	200	298	386
B	351M, 352M, 353-½M	in.	2-¼	2-¼	2-¼	2-9/16	2-¾	3-⅜	3-⅞	5-⅛	6	6-¾	—
		mm	57	57	57	65	70	81	98	130	152	171	—
	352-½	in.	1-⅞	1-⅞	2-⅛	2-9/16	3-⅛	3-9/16	4-3/16	5-⅜	6-½	7	11-⅜
		mm	48	48	54	65	79	90	122	137	165	178	289
C (NPT)	351M, 352M, 353-1/2M	in.	¼	¼	¼	⅜	⅜	¾	¾	1	1-¼	1-½	—
	352-½	in.	⅛	⅛	⅛	¼	¼	⅜	½	¾	1	1	—
D Screen Removal	351M, 352M, 353-½M	in.	2-½	2-½	2-½	2-⅝	3-⅜	4-⅜	5	6-⅞	8-¾	9-¾	—
		mm	64	64	64	67	86	117	127	175	222	248	—
	352-½	in.	2-¾	2-¾	3	4	4-½	5-½	6-½	8-¼	10	10-½	16
		mm	70	70	76	102	114	140	165	210	254	267	406
Wt.	351M, 352M, 353-½M	lb	.75	.75	.75	1.38	2.13	3.13	4.5	7	12.5	18	—
		kg	.34	.34	.34	.63	.97	1.42	2.04	3.16	5.7	8.2	—
	352-½	lb	.75	.75	1	1.75	2.5	4.25	5.5	8.25	15.5	36	—
		kg	.34	.34	.45	.79	1.13	1.93	2.5	3.74	7	16.3	—

*351M & 352M only. 353-1/2M available in sizes ½" - 3".

MUELLER STEAM SPECIALTY

Rt. 2 Box 44 / N.C. Hwy. 20 West, St. Pauls, NC 28384 USA
Tel: 910-865-8241 FAX: 910-865-8245

C5

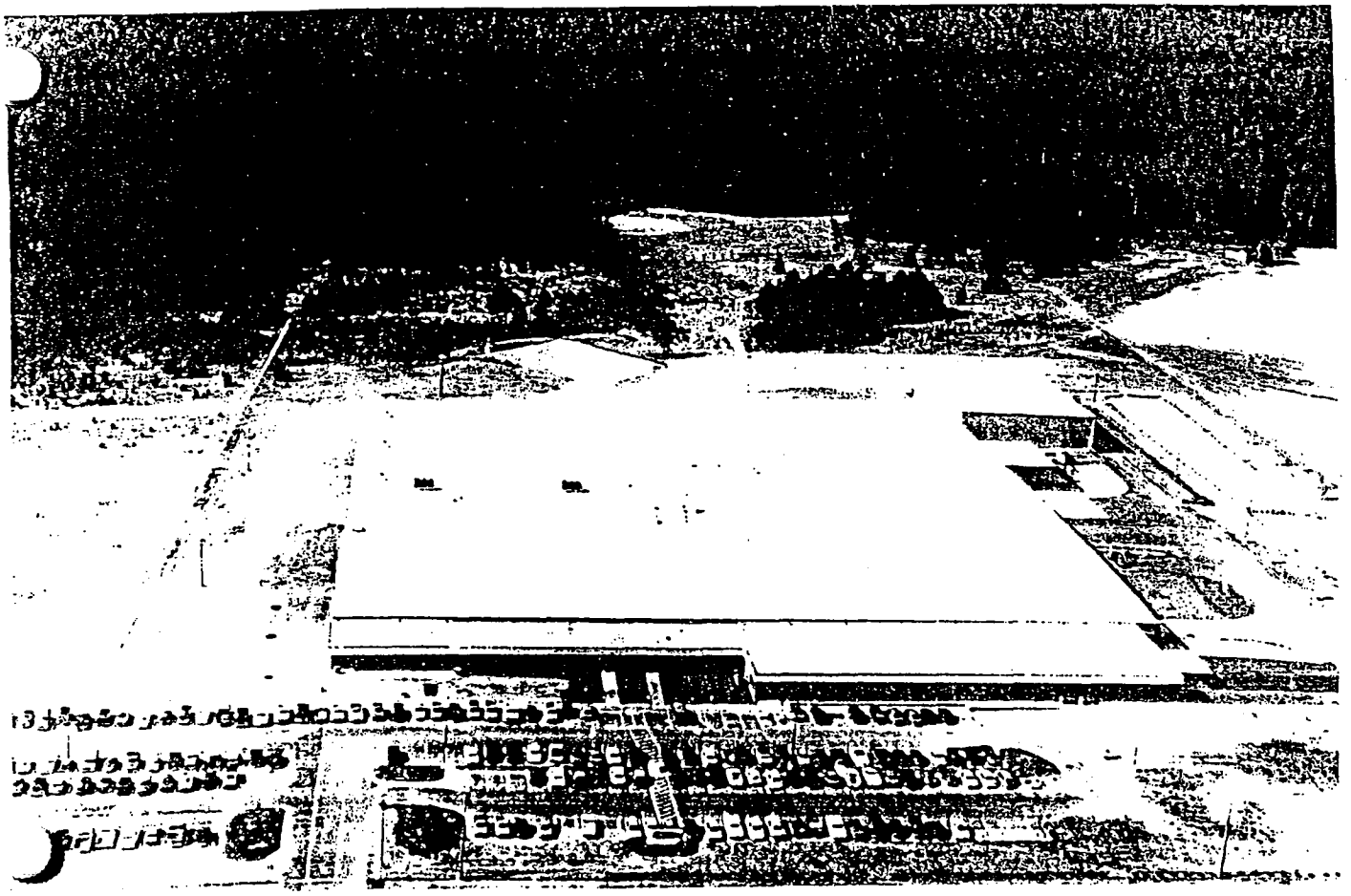

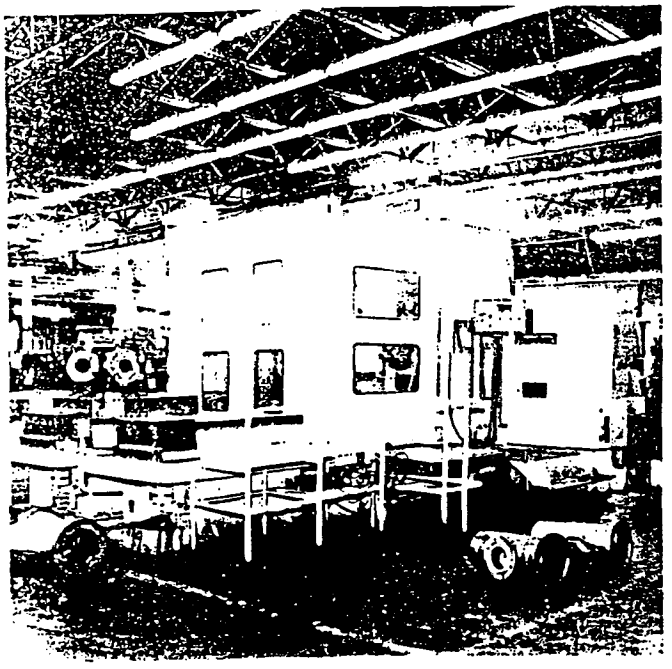

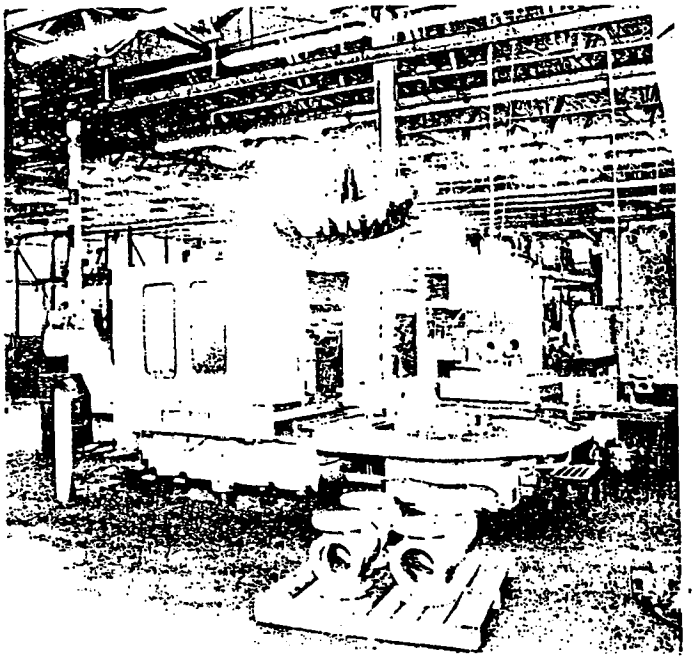

new numeric controlled robotic machining center es us to manufacture products of the highest quality e still being cost competitive. Teamed with one of our skilled machinists this machine also has the flexibility to produce many different products in a very short time.

Mueller Steam Specialty has chosen its new robotic manufacturing equipment with the varied needs of our customers in mind so we can continue to offer value with quality.

MUELLER STEAM SPECIALTY

Rt. 2 Box 44 / N.C. Hwy. 20 West, St. Pauls, NC 28384 USA
Tel: 910-865-8241 FAX: 910-865-8245

MANUFACTURING FACILITIES

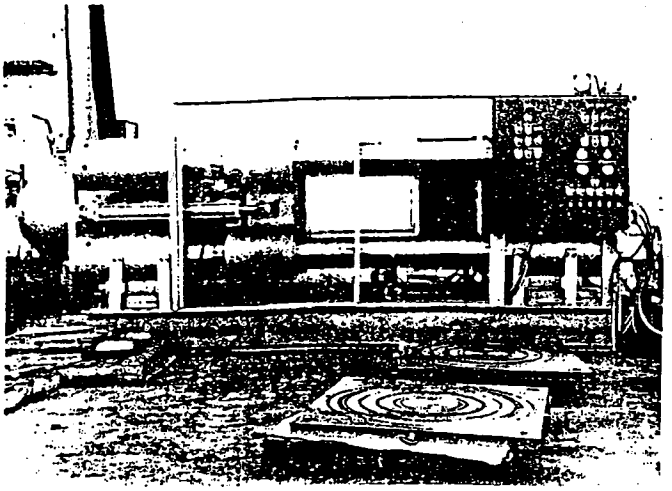

The hydrotest machine shown here was designed for use in testing our extensive line of high pressure strainers and check valves. This is only one of the many tests we perform to assure product quality.

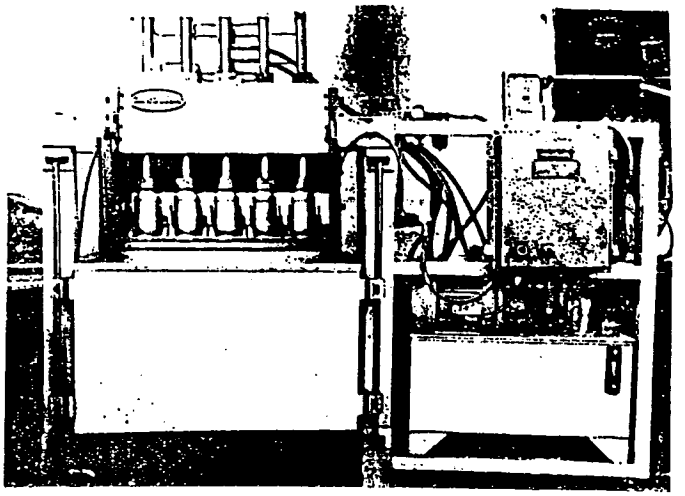

In order to maintain quality and efficiency we designed this automated tester for small "Y" type strainers. Even our small, high volume products are 100% tested.

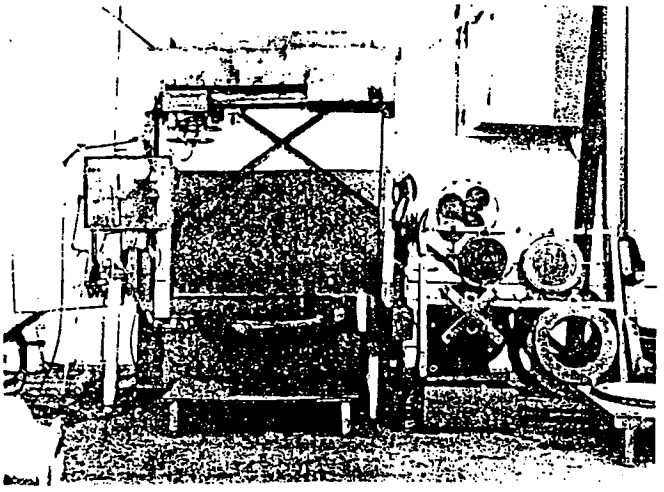

This hydrotest machine was designed by us to test large strainers and check valves. All of our products are completely tested and inspected before they are shipped to our customers.

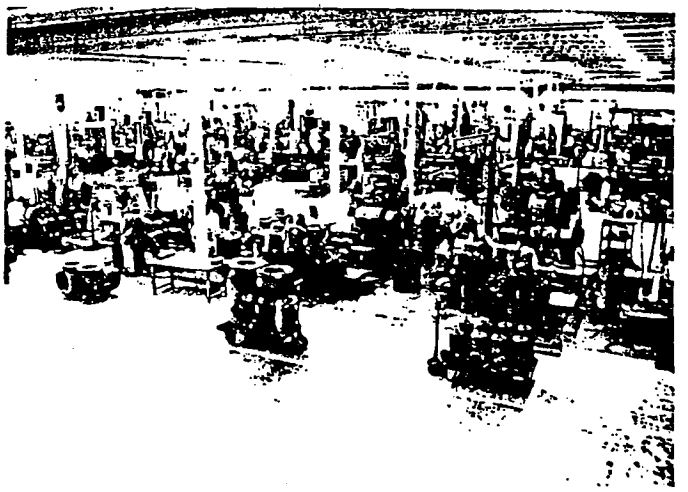

This view shows only a part of our manufacturing facility. Our skilled machinists stand ready to modify our products with special features to comply with your specifications.

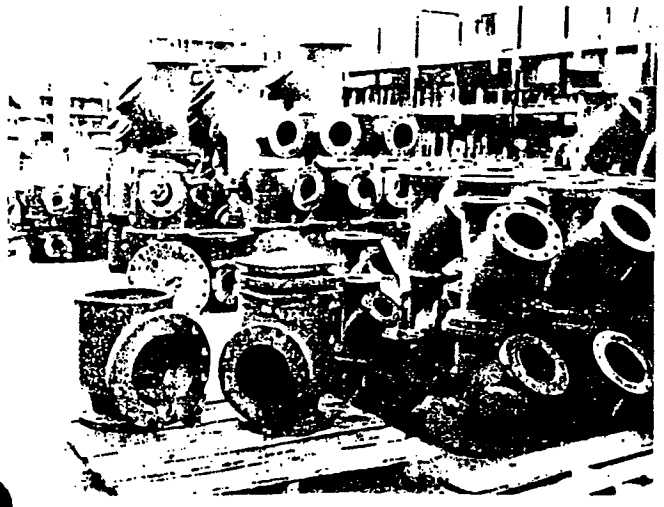

This is only a small portion of the stock of various products in different materials which we maintain to assure fast delivery of standard items.

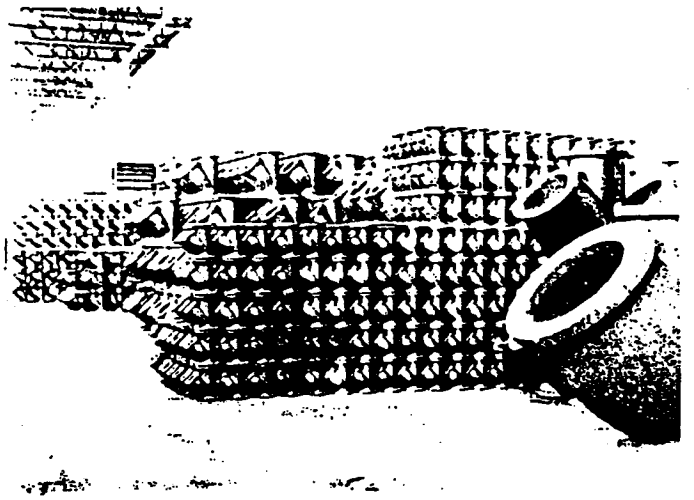

Mueller Steam Specialty maintains a large stock of frequently specified products so that we can often ship the same day we receive your order.

MUELLER STEAM SPECIALTY

Rt. 2 Box 44 / N.C. Hwy. 20 West, St. Pauls, NC 28384 USA
Tel: 910-865-8241 FAX: 910-865-8245

STANDARD TERMS AND CONDITIONS OF SALE

1. **General**
   A. Written quotations are firm for a period of thirty days after date unless canceled by the seller in writing prior to acceptance by the purchaser. Verbal quotations are subject to acceptance within 24 hours unless within that period they are confirmed in writing by the seller. Stenographic and clerical errors are subject to correction.
   B. All orders resulting from written or verbal quotations or from published price lists or literature are subject to written acceptance by an authorized individual at our office in St. Pauls, N.C.
   C. Quotations are made and orders accepted on a firm price basis, provided the orders are released and scheduled for shipment within a period of 5 months after the date of the order. Orders released for shipment longer than 5 months from their date are subject to the prices in effect on the date of shipment.
   D. Contracts or orders having penalty clauses for failure to meet shipment are not acceptable unless specifically approved in writing by an authorized individual at our office in St. Pauls, N.C.
   E. Delivery promises are based on conditions at the time of quoting. They are also subject to change clause by (1) acts of the government or its agents (2) operations of the priority system (3) the prior acceptance of other orders (4) strikes, riots, fire or other causes beyond the seller's control including unavoidable delays in transportation or inability to obtain necessary materials, labor or manufacturing facilities. Under no circumstance will the seller be liable for consequential damages of any kind due to its failure to fulfill a delivery promise.
   F. All quotations are subject to an increase equal in amount to any tax that the seller may be required to collect or pay upon the sale of the material quoted.
   G. We reserve the right to alter dimensions without notice. Send for certified drawings.

2. **Warranty**
   Seller warrants each of the products and parts sold hereunder, under normal use and service, and subject to user's compliance with any operating instructions and other directions given by seller, to be free from defects in materials or workmanship for a period of one year from date of shipment from the seller's plant. Seller's liability under this warranty shall be limited, at seller's option, to repairing or replacing any such defective products F.O.B. seller's plant, St. Pauls, North Carolina, and reimbursing purchaser's shipping costs, subject to the following: (1) timely receipt of purchaser's written notice that such products are defective, (2) seller's written authorization to purchaser for the return of such products, (3) the return of such products to seller with shipping charges prepaid and (4) seller's inspection of and confirmation that such products are defective in materials or workmanship. If seller's inspection shows that the products returned are defective due to dirt, rust or any foreign material not attributable to seller, improper usage, over-tightening on threads, abuse or incorrect reassembly, in the field or other cause not due to seller's improper manufacture, seller will, subject to purchaser's written authorization, repair or replace such products at cost. Seller's factory inspection and testing reports will be made available to purchaser upon request. **THIS WARRANTY IS IN LIEU OF ANY OTHER WARRANTIES, EXPRESS OR IMPLIED, INCLUDING ANY IMPLIED WARRANTY OF FITNESS OR MERCHANTABILITY. SELLER SHALL NOT BE LIABLE FOR ANY SPECIAL, INCIDENTAL OR CONSEQUENTIAL DAMAGES. NO REPRESENTATIVE OF SELLER HAS AUTHORITY TO MAKE ANY REPRESENTATIONS OR WARRANTIES EXCEPT AS STATED HEREIN.**

3. **Patents**
   A. On parts or assemblies supplied by the seller which are made under its own patents, the seller will hold harmless the purchaser from any patent infringement suit or suits, provided that the seller is notified in writing within 10 days after any such claim is made and is tendered the defense of any suit instituted against the purchaser therefor.
   B. In case the part assembly is in such suit to constitute infringement and its use by the purchaser in the manner intended by the seller is enjoined the seller will at his expense and at his option, either (1) procure for the purchaser the right to continue use, or (2) replace with non-infringing parts or assemblies or (3) make modifications to avoid infringing or (4) remove said part or assembly and refund the purchase price, transportation and installation costs thereof. The foregoing states the seller's entire liability to the purchaser with respect to patent infringement by said part or assembly.

4. **Cancellation**
   Any order or part thereof may be canceled by the purchaser upon written notice to the seller prior to 30 days before completion. Upon receipt of a cancellation notice, all work on the order or part thereof being canceled will be stopped as promptly as reasonably possible and the purchaser will be liable for a cancellation charge computed on the basis of established prices for all completed items and for the full cost incurred by the seller up to the time of work stoppage plus 15 % on incomplete items, plus a charge for packing and storing but less credit similarly computed for all standard items that can be used at that time to fill other orders and for the balance of the material as scrap.

5. **Freight Allowance**
   All shipments are F.O.B. Factory

6. **Packaging**
   All material will be packed for domestic shipment without additional charge. Export shipments will be subject to additional charge for special overseas packaging. Additional charge may be imposed if required to package in accordance with government or military specifications or standards or for long-term storage.

7. **Terms**
   Net 30 days from date of invoice unless otherwise agreed upon by both the seller and purchaser. Past due accounts are subject to 1 1/2% service charge per month (18% per annum).

8. **Export Orders**
   Special credit terms or conditions may be applied to orders from customers located outside of the Continental United States. In such cases, please consult an authorized individual at our office in St. Pauls, North Carolina.

9. **Title**
   Delivery of material to the carrier, consigned to the purchaser or as the purchaser may direct, will constitute transfer of title, ownership, possession and property in and to the material at such point of delivery, and such carrier will thereafter be deemed to be acting for the purchaser and the material will thereafter be at the purchaser's risk.

10. **Returns**
    No materials may be returned to the factory without written permission being given by an authorized individual at our office in St. Pauls, N.C. A copy of the seller's authorization for return must be attached to the returned material.

11. **Minimum Billing**
    Minimum billing for any part assembly will be $25.00 net.

A PARTIAL LIST OF OUR CUSTOMERS AND JOBS

Abbott Laboratories
Amoco
Aramco Services Corp.

Battery Park Plaza, NY
Bechtel Petroleum Inc.
Bechtel Power Corp.
Black and Veatch
Boise Cascade
Borden Chemical
BP Oil
Brown and Root, Inc.
Burns and McDonnell Engineering Co.
Burns & Roe, Inc.

Carolina Power & Light Co., Inc.
C.F. Braun Inc.
Champion Paper
Chevron USA
Ciba Geigy
Combustion Engineering Corp.

Davy McKee Inc.
Detroit Edison
Dow Chemical
Duke Power

Eastman Kodak
Ebasco Services
Exxon

Florida Power & Light
Fluor Daniel
Formosa Plastics
Foster Wheeler Energy Corp.

General Dynamics
General Electric Co.
General Motors
Georgia Pacific
Georgia Power co.,
Gibbs and Hill Inc.

Harrah's Trump Plaza, Atlantic City, NJ
H.J. Heinz
Hoechst Celanese
Houston Power & Light Co.

ICI America
Ingalls Shipbuilding Inc.
Irving Trust Building, NY

J.A. Jones Construction Co.
J.E. Serrine
Johnson Controls

Kaiser Aluminum

Lummus Inc.

Marathon Oil
Missouri Basin Power Co.
Mobile Chemical
Morrison Knudsen

National City Bank Building, NY
Naval Intelligence Center
Newport News Shipbuilding and Dry Dock
1 New York Plaza, NY
Nucor Yomato Steel

Occidental Chemical

Pacific Power & Light
Peterson Bay Shipbuilding Inc.
Proctor & Gamble

Rhone Poulenc
R.M. Parsons
Rockwell International

Sargent and Lundy Inc.
Shell Oil
Sohio
Stepan Co.
Stone Container
Stone and Webster Engineering Corp.

Tenneco Refinery
Texaco
TIME-LIFE
Todd Shipyards Corp.
TVA

Union Carbide
Union Oil
USX

Westinghouse Electric Co.
Weyerhaeuser Paper Co.
Willamette Industries

PVC PIPE

PVC is the most frequently specified of all plastic piping materials. It has been used successfully for over 30 years in such areas as chemical processing, industrial plating, chilled water distribution, deionized water lines, chemical drainage, DWV piping, and irrigation systems. PVC is characterized by high physical properties and resistance to corrosion and chemical attack by acids, alkalis, salt solutions and many other aggressive chemicals.

PVC PIPE - SCHEDULE 80

SCHEDULE 80 PVC PIPE - *Conforms to ASTM D-1785, Type 1 (normal impact), Grade 1 (high chemical resistance). This pipe also conforms to U.S. Product Standard PS 21-70 (supersedes U.S. Commercial Standard CS 207-60) as having the same O.D. dimensions as iron pipe. The National Sanitation Foundation (NSF) has approved pipe sizes 1/2" thru 12" for use in potable water service. Schedule 80 pipe may be threaded.*

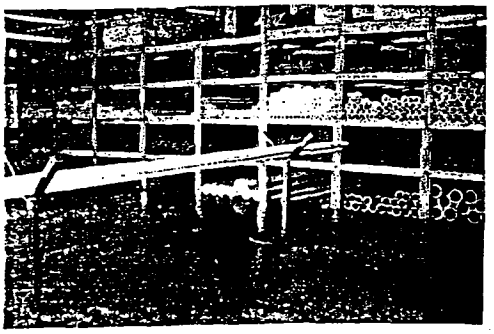

NOTE:
1. Standard length 20 feet, normally gray in color.
2. Pressures shown are for solvent welded pipe. Threaded pipe reduces working pressure by 50%.

PIPE SIZE (IN.)	PART NUMBER	PRICE PER FT. ($)	APPROX. WT/100 FT. (LB)	MAX. W.P. @ 73.4°F	OUTSIDE DIA. (IN.)	MINIMUM WALL THICK. (IN.)
1/8	800-001	1.03	5.8	1225	.405	.095
1/4	800-002	1.23	10.1	1130	.540	.119
3/8	800-003	1.70	13.8	920	.675	.126
1/2	800-005	.89	20.5	850	.840	.147
3/4	800-007	1.20	27.8	690	1.050	.154
1	800-010	1.77	40.4	630	1.315	.179
1-1/4	800-012	2.44	56.7	520	1.660	.191
1-1/2	800-015	2.95	68.9	470	1.900	.200
2	800-020	4.08	94.9	400	2.375	.218
2-1/2	800-025	6.22	144.9	425	2.875	.276
3	800-030	8.32	193.8	375	3.500	.300
3-1/2	800-035	24.82	232.2	350	4.000	.318
4	800-040	12.16	283.3	324	4.500	.337
5	800-050	27.21	386.7	290	5.563	.375
6	800-060	23.19	541.1	280	6.625	.432
8	800-080	36.49	821.9	250	8.625	.500
10	800-100	54.10	1227.7	230	10.750	.593
12	800-120	74.43	1710.4	230	12.750	.687
14	800-140	109.66	2126.0	220	14.00	.750
16	800-160	140.90	2732.0	220	16.00	.843
18	800-180	177.43	3440.0	220	18.00	.937

PVC PIPE - SCHEDULE 40

PIPE SIZE (IN.)	PART NUMBER	PRICE PER FT. ($)	APPROX. WT/100 FT. (LB)	MAX. W.P. @ 73.4°F	OUTSIDE DIA. (IN.)	MINIMUM WALL THICK. (IN.)
1/4[2]	400-002	.98	8.1	780	.540	.088
3/8[2]	400-003	1.31	10.9	620	.675	.091
1/2	400-005	.67	16.4	600	.840	.109
3/4	400-007	.89	21.8	480	1.050	.113
1	400-010	1.32	32.1	450	1.315	.133
1-1/4	400-012	1.77	43.4	370	1.660	.140
1-1/2	400-015	2.12	51.8	330	1.900	.145
2	400-020	2.84	69.5	280	2.375	.154
2-1/2	400-025	4.51	109.6	300	2.875	.203
3	400-030	5.83	143.5	260	3.500	.216
3-1/2[2]	400-035	18.14	169.7	240	4.000	.226
4	400-040	8.30	204.3	220	4.500	.237
5	400-050	11.27	272.6	190	5.563	.258
6	400-060	14.59	360.9	180	6.625	.280
8	400-080	26.43	545.3	160	8.625	.322
10	400-100	32.26	791.3	140	10.750	.365
12	400-120	42.65	1053.2	130	12.750	.406
14	400-140	53.00	1247.0	130	14.00	.437
16	400-160	71.06	1675.0	130	16.00	.500
18	400-180	108.87	2111.0	130	18.00	.562
20	400-200	127.93	2490.0	130	20.00	.593
24	400-240	165.07	3451.0	130	24.00	.687

SCHEDULE 40 PVC PIPE - Conforms to ASTM D-1785, Type 1 (normal impact), Grade 1 (high chemical resistance). This pipe also conforms to U.S. Product Standard PS 21-70 (supersedes U.S. Commercial Standard CS 207-60) as having the same O.D. dimensions as iron pipe. The National Sanitation Foundation (NSF) has approved pipe sizes 1/2" thru 12" for use in potable water service. **Schedule 40 pipe should not be threaded.**

PVC (CLASS) SDR AND SCHEDULE 120 PIPE ARE AVAILABLE. CONSULT YOUR LOCAL HARRINGTON SERVICE CENTER FOR SPECIFIC TYPE AND SIZES.

NOTES:
1. Standard length 20 feet.
2. Pipe sizes 1/4", 3/8" and 3-1/2" are gray in color. All other pipe is normally white.
3. Pipe may be plain or belled end.

WARNING: DO NOT TEST OR USE PVC PIPING FOR AIR OR COMPRESSED GASES.

PVC MOLDED FITTINGS - SCHEDULE 80

- TYPE 1, GRADE 1 (CELL CLASSIFICATION 12454B)
- ASTM D-1784 (PVC RESIN)
- ASTM D-2464 FOR THREADED FITTINGS
- ASTM D-2467 FOR SOCKET FITTINGS
- APPROVED BY THE NATIONAL SANITATION FOUNDATION (NSF)
- GRAY IN COLOR

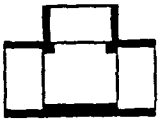

TEE
SOC x SOC x SOC

NOMINAL PIPE SIZE (IN.)	PART NUMBER	PRICE EACH ($)
1/4	801-002	10.68
3/8	801-003	10.68
1/2	801-005	10.68
3/4	801-007	11.18
1	801-010	13.97
1-1/4	801-012	38.40
1-1/2	801-015	38.40
2	801-020	48.04
2-1/2	801-025	52.24
3	801-030	65.29
4	801-040	75.63
6	801-060	258.29
8	801-080	599.02
10*	801-100M	1,979.06
12*	801-120M	2,794.92
3/4x3/4x1/2	801-101	8.16
1x1x1/2	801-130	11.82
1x1x3/4	801-131	11.82
1-1/4x1-1/4x3/4	801-157	19.51
1-1/4x1-1/4x1	801-168	25.64
1-1/2x1-1/2x3/4	801-210	25.64
1-1/2x1-1/2x1	801-211	25.64
1-1/2x1-1/2x1-1/4	801-212	25.64
2x2x1/2	801-247	32.49
2x2x3/4	801-248	32.49
2x2x1	801-249	32.49
2x2x1-1/2	801-251	32.49
3x3x2	801-338	59.57
4x4x2	801-420	96.28
4x4x3	801-422	96.28
6x6x3	801-530	192.37
6x6x4	801-532	258.29
8x8x6	801-585	599.02

NOTE: * NSF S.E. National Sanitation Foundation specialty engineered. 200 psi max. internal pressure rating @ 73°F.

NOTE: Pipe wrenches, water pump pliers and other metal gripping tools are not recommended for use with plastic pipe. See our Tool Section of this catalog for the proper tools.

90° ELBOW
SOC x SOC

NOMINAL PIPE SIZE (IN.)	PART NUMBER	PRICE EACH ($)
1/4	806-002	3.78
3/8	806-003	3.78
1/2	806-005	3.78
3/4	806-007	4.86
1	806-010	7.81
1-1/4	806-012	10.40
1-1/2	806-015	11.17
2	806-020	13.50
2-1/2	806-025	31.58
3	806-030	35.52
4	806-040	53.99
6	806-060	153.59
8	806-080	423.33
10*	806-100M	1,894.47
12*	806-120M	2,469.61

NOTE: *NSF S.E. National Sanitation Foundation specialty engineered. 200 psi max. internal pressure rating @ 73°F.

45° ELBOW
SOC x SOC

NOMINAL PIPE SIZE (IN.)	PART NUMBER	PRICE EACH ($)
1/4	817-002	13.57
3/8	817-003	13.57
1/2	817-005	7.16
3/4	817-007	10.86
1	817-010	16.32
1-1/4	817-012	20.79
1-1/2	817-015	24.59
2	817-020	31.84
2-1/2	817-025	66.88
3	817-030	81.41
4	817-040	146.58
6	817-060	184.58
8	817-080	400.16
10*	817-100M	1,259.81
12*	817-120M	1,625.09

NOTE: * NSF S.E. National Sanitation Foundation specialty engineered. 200 psi max. internal pressure rating @ 73°F.

COUPLING
SOC x SOC

NOMINAL PIPE SIZE (IN.)	PART NUMBER	PRICE EACH ($)
1/4	829-002	10.93
3/8	829-003	8.19
1/2	829-005	6.86
3/4	829-007	9.26
1	829-010	9.50
1-1/4	829-012	14.51
1-1/2	829-015	15.64
2	829-020	16.76
2-1/2	829-025	41.33
3	829-030	47.47
4	829-040	59.46
6	829-060	127.90
8	829-080	174.09
10*	829-100SP	78.40
12*	829-120SP	90.36

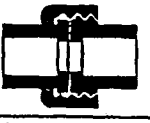

UNION
SOC x SOC

NOMINAL PIPE SIZE (IN.)	PART NUMBER	PRICE EACH ($)
EPDM O-Ring		
1/4	897-002	25.90
3/8	897-003	25.90
1/2	897-005	13.84
3/4	897-007	17.61
1	897-010	20.14
1-1/4	897-012	39.93
1-1/2	897-015	45.19
2	897-020	61.29
3	897-030	114.09
4	897-040	157.79
Viton O-Ring		
1/4	857-002	26.20
3/8	857-003	26.20
1/2	857-005	14.02
3/4	857-007	17.83
1	857-010	20.39
1-1/4	857-012	40.43
1-1/2	857-015	45.77
2	857-020	62.04
3	857-030	115.52
4	857-040	160.94

NOTE: For pipe sizes larger than 4", flanges are recommended.

NOTE: LARGE DIAMETER FABRICATED FITTING AVAILABLE, SEE PAGES 1-8 & 1-9.

PVC MOLDED FITTINGS - SCHEDULE 80

45° ELBOW
FPT x FPT

NOMINAL PIPE SIZE (IN.)	PART NUMBER	PRICE EACH ($)
1/4	819-002	15.41
3/8	819-003	15.41
1/2	819-005	14.07
3/4	819-007	15.07
1	819-010	18.97
1-1/4	819-012	28.91
1-1/2	819-015	36.94
2	819-020	53.91
2-1/2	819-025	106.61
3	819-030	171.49
4	819-040	246.09

TEE
FPT x FPT x FPT

NOMINAL PIPE SIZE (IN.)	PART NUMBER	PRICE EACH ($)
1/4	805-002	12.32
3/8	805-003	12.32
1/2	805-005	12.32
3/4	805-007	13.73
1	805-010	30.28
1-1/4	805-012	32.14
1-1/2	805-015	38.91
2	805-020	41.86
2-1/2	805-025	152.38
3	805-030	159.16
4	805-040	258.68

COUPLING
FPT x FPT

NOMINAL PIPE SIZE (IN.)	PART NUMBER	PRICE EACH ($)
1/4	830-002	8.26
3/8	830-003	7.68
1/2	830-005	7.68
3/4	830-007	10.92
1	830-010	11.71
1-1/4	830-012	14.51
1-1/2	830-015	32.26
2	830-020	33.88
2-1/2	830-025	80.87
3	830-030	96.01
4	830-040	164.20

UNION
FPT x FPT

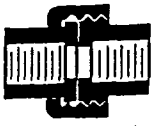

NOMINAL PIPE SIZE (IN.)	PART NUMBER	PRICE EACH ($)
EPDM O-RING		
1/4	898-002	27.90
3/8	898-003	27.90
1/2	898-005	16.07
3/4	898-007	22.49
1	898-010	29.93
1-1/4	898-012	57.12
1-1/2	898-015	70.72
2	898-020	108.83
3	898-030	276.00
4	898-040	322.80
VITON O-RING		
1/4	858-002	28.26
3/8	858-003	28.26
1/2	858-005	16.29
3/4	858-007	22.79
1	858-010	30.30
1-1/4	858-012	57.82
1-1/2	858-015	71.61
2	858-020	110.18
3	858-030	279.46
4	858-040	328.41

NOTE: Socket x thread available on request with 235 psi max. internal pressure rating @ 73° F.

CAP
FPT

NOMINAL PIPE SIZE (IN.)	PART NUMBER	PRICE EACH ($)
1/4	848-002	8.36
3/8	848-003	8.36
1/2	848-005	8.36
3/4	848-007	9.40
1	848-010	11.80
1-1/4	848-012	14.08
1-1/2	848-015	16.07
2	848-020	31.58
2-1/2	848-025	63.17
3	848-030	74.36
4	848-040	130.93

PLUG
MPT

NOMINAL PIPE SIZE (IN.)	PART NUMBER	PRICE EACH ($)
1/4	850-002	4.26
3/8	850-003	4.26
1/2	850-005	6.47
3/4	850-007	6.71
1	850-010	8.26
1-1/4	850-012	12.07
1-1/2	850-015	14.72
2	850-020	15.07
2-1/2	850-025	42.19
3	850-030	49.19
4	850-040	95.77

REDUCING COUPLING
FPT x FPT

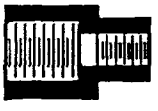

NOMINAL PIPE SIZE (IN.)	PART NUMBER	PRICE EACH
3/4x1/2	830-101	9.11
1x1/2	830-130	13.50
1x3/4	830-131	13.50
1-1/4x3/4	830-167	29.01
1-1/2x1	830-211	43.03
2x1-1/2	830-251	57.12

NOTE: Larger sizes available on request.

REDUCING COUPLING
SOC x SOC

NOMINAL PIPE SIZE (IN.)	PART NUMBER	PRICE EACH ($)
3/4x1/2	829-101	8.36
1x1/2	829-130	11.69
1x3/4	829-131	12.20
1-1/4x1	829-168	24.79
1-1/2x1	829-211	25.97
1-1/2x1-1/4	829-212	32.09
2x1-1/2	829-251	29.28
3x2	829-338	71.88
4x3	829-422	135.47
6x4	829-532	276.32
8x6	829-585	836.92

PVC MOLDED FITTINGS - SCHEDULE 80

CAP
SOC

NOMINAL PIPE SIZE (IN.)	PART NUMBER	PRICE EACH ($)
1/4	847-002	8.69
3/8	847-003	6.72
1/2	847-005	6.72
3/4	847-007	7.04
1	847-010	12.52
1-1/4	847-012	15.13
1-1/2	847-015	15.13
2	847-020	29.86
2-1/2	847-025	61.01
3	847-030	71.38
4	847-040	120.39
6	847-060	168.56
8	847-080	384.57

FEMALE ADAPTER
SOC x FPT

NOMINAL PIPE SIZE (IN.)	PART NUMBER	PRICE EACH ($)
1/4	835-002	11.62
3/8	835-003	8.19
1/2	835-005	6.42
3/4	835-007	9.51
1	835-010	14.01
1-1/4	835-012	22.72
1-1/2	835-015	27.87
2	835-020	48.62
2-1/2	835-025	76.77
3	835-030	86.41
4	835-040	148.53

MALE ADAPTER
SOC x MPT

NOMINAL PIPE SIZE (IN.)	PART NUMBER	PRICE EACH ($)
1/2	836-005	8.01
3/4	836-007	8.82
1	836-010	15.29
1-1/4	836-012	17.86
1-1/2	836-015	25.66
2	836-020	37.10
2-1/2	836-025	42.20
3	836-030	46.83
4	836-040	83.24

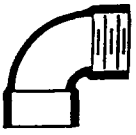

90° ELBOW
SOC x FPT

NOMINAL PIPE SIZE (IN.)	PART NUMBER	PRICE EACH ($)
1/2	807-005	14.88
3/4	807-007	17.51
1	807-010	18.92
1-1/4	807-012	21.82
1-1/2	807-015	26.03
2	807-020	33.74
3	807-030	79.93

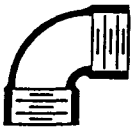

90° ELBOW
FPT x FPT

NOMINAL PIPE SIZE (IN.)	PART NUMBER	PRICE EACH ($)
1/4	808-002	9.38
3/8	808-003	9.38
1/2	808-005	8.76
3/4	808-007	10.90
1	808-010	13.73
1-1/4	808-012	14.77
1-1/2	808-015	20.98
2	808-020	23.93
2-1/2	808-025	91.99
3	808-030	148.34
4	808-040	261.02

TEE
SOC x SOC x FPT

NOMINAL PIPE SIZE (IN.)	PART NUMBER	PRICE EACH ($)
1/2	802-005	16.86
3/4	802-007	21.82
1	802-010	25.53
1-1/2	802-015	32.10
2	802-020	39.51

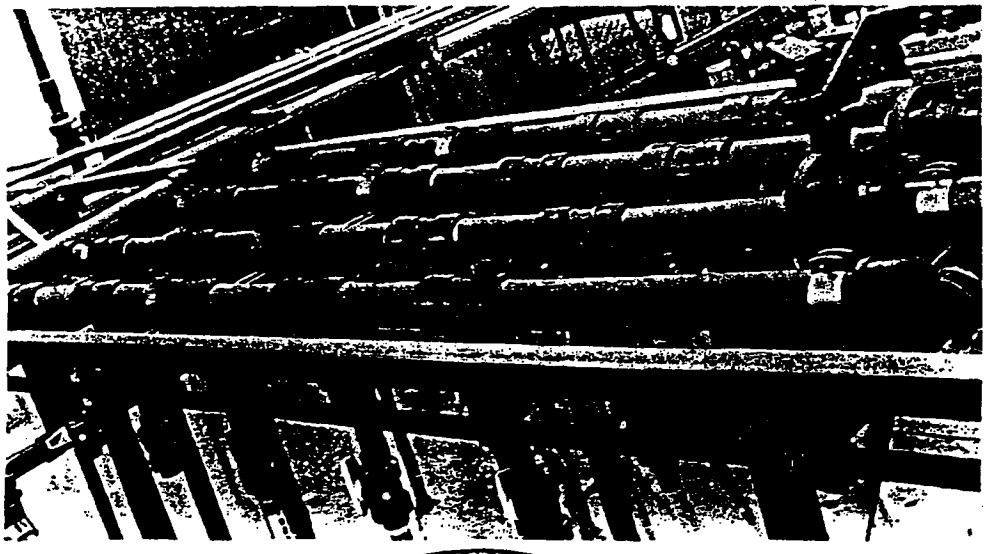

PVC FITTINGS - SCHEDULE 80

REDUCING BUSHING
MPT x FPT

NOMINAL PIPE SIZE (IN.)	PART NUMBER	PRICE EACH ($)
3/8x1/4	839-052	13.77
1/2x1/4	839-072	8.47
1/2x3/8	839-073	13.77
3/4x1/4	839-098	8.47
3/4x3/8	839-099	10.28
3/4x1/2	839-101	8.47
1x1/4	839-128	16.58
1x3/8	839-129	13.26
1x1/2	839-130	13.26
1x3/4	839-131	13.26
1-1/4x1/2	839-166	14.10
1-1/4x3/4	839-167	14.10
1-1/4x1	839-168	14.10
1-1/2x1/2	839-209	16.68
1-1/2x3/4	839-210	16.68
1-1/2x1	839-211	16.68
1-1/2x1-1/4	839-212	16.68
2x1/2	839-247	24.41
2x3/4	839-248	24.41
2x1	839-249	24.41
2x1-1/4	839-250	24.41
2x1-1/2	839-251	24.41
2-1/2x2	839-292	33.07
3x1-1/2	839-337	44.94
3x2	839-338	44.94
3x2-1/2	839-339	44.94
4x2	839-420	92.68
4x3	839-422	118.37

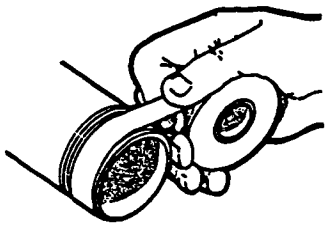

TEFLON tape prevents galling of threaded fittings and is required for leak-tight threaded joints, see page 1-31.

REDUCING BUSHING
SPIG x FPT

NOMINAL PIPE SIZE (IN.)	PART NUMBER	PRICE EACH ($)
3/8x1/4	838-052	6.06
1/2x1/8	838-071	6.06
1/2x1/4	838-072	6.06
1/2x3/8	838-073	6.06
3/4x1/4	838-098	4.02
3/4x1/2	838-101	4.02
1x3/8	838-129	6.31
1x1/2	838-130	6.31
1x3/4	838-131	6.31
1-1/4x1/2	838-166	12.83
1-1/4x3/4	838-167	12.83
1-1/4x1	838-168	12.83
1-1/2x1/2	838-209	16.07
1-1/2x3/4	838-210	16.07
1-1/2x1	838-211	16.07
1-1/2x1-1/4	838-212	16.07
2x1/2	838-247	19.69
2x3/4	838-248	19.69
2x1	838-249	19.69
2x1-1/4	838-250	19.69
2x1-1/2	838-251	19.69
2-1/2x1/2	838-287	41.61
2-1/2x3/4	838-288	41.61
2-1/2x1	838-289	41.61
2-1/2x1-1/4	838-290	41.61
2-1/2x1-1/2	838-291	41.61
2-1/2x2	838-292	41.61
3x3/4	838-334	77.02
3x1	838-335	77.02
3x1-1/4	838-336	77.02
3x1-1/2	838-337	77.02
3x2	838-338	77.02
3x2-1/2	838-339	77.02
4x2	838-420	118.37
4x2-1/2	838-421	118.37
4x3	838-422	118.37
6x2	838-528	136.34
6x3	838-530	136.34
6x4	838-532	136.34

REDUCING BUSHING
SPIG x SOC

NOMINAL PIPE SIZE (IN.)	PART NUMBER	PRICE EACH ($)
3/8x1/4	837-052	6.06
1/2x1/4	837-072	6.06
1/2x3/8	837-073	6.06
3/4x1/2	837-101	2.19
1x1/2	837-130	6.31
1x3/4	837-131	6.31
1-1/4x1/2	837-166	9.92
1-1/4x3/4	837-167	9.92
1-1/4x1	837-168	9.92
1-1/2x1/2	837-209	13.50
1-1/2x3/4	837-210	13.50
1-1/2x1	837-211	13.50
1-1/2x1-1/4	837-212	13.50
2x1/2	837-247	19.27
2x3/4	837-248	19.27
2x1	837-249	19.27
2x1-1/4	837-250	19.27
2x1-1/2	837-251	19.27
2-1/2x1-1/2	837-291	33.39
2-1/2x2	837-292	33.39
3x1	837-335	53.02
3x1-1/4	837-336	53.02
3x1-1/2	837-337	53.02
3x2	837-338	53.02
3x2-1/2	837-339	53.02
4x2	837-420	73.43
4x3	837-422	73.43
6x2	837-528	102.03
6x3	837-530	102.03
6x4	837-532	102.03
8x6	837-585	180.83
10x6*	537-626	583.17
10x8*	537-628	583.17
12x8*	537-668	673.90
12x10*	537-670	673.90

NOTE: *Denotes 150 psi maximum internal pressure rating.

PVC FITTINGS - SCHEDULE 80

FLANGE

SOC (VAN STONE STYLE)

NOMINAL PIPE SIZE (IN.)	PART NUMBER	PRICE EACH ($)
1/2	854-005	20.66
3/4	854-007	22.13
1	854-010	24.64
1-1/4	854-012	25.40
1-1/2	854-015	25.93
2	854-020	34.49
2-1/2	854-025	53.28
3	854-030	58.87
4	854-040	74.47
5	854-050	117.16
6	854-060	117.17
8	854-080	190.77
10	854-100	300.10
12	854-120	323.52
14	854-140	1,028.00
16	854-160	1,375.00

NOTE: Flanges conform to ANSI 150 lb. dimensions. Maximum internal pressure 150 psi @ 73°F.

NOTE: Van Stone flanges are used to make installation easier. This unique concept allows the installer to rotate the back-up ring aligning bolt holes in desired position for assembly. Jigs to align bolt holes are not required.

Solvent cement and primer are shown on pages 1-30,1-31 & 1-32.

Flange gaskets and bolt packs are shown on pages 1-32 & 1-33.

NOTE: To order primer or solvent cement, see pages 1-30, 1-31 & 1-32.

FLANGE

FPT (VAN STONE STYLE)

NOMINAL PIPE SIZE (IN.)	PART NUMBER	PRICE EACH ($)
1/2	855-005	24.76
3/4	855-007	29.04
1	855-010	31.78
1-1/4	855-012	43.80
1-1/2	855-015	47.82
2	855-020	48.93
2-1/2	855-025	112.48
3	855-030	115.74
4	855-040	217.49

NOTE: Flanges conform to ANSI 150 lb. dimensions. Maximum internal pressure 150 psi @ 73°F.

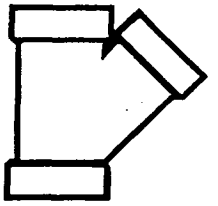

WYE
SLIP x SLIP x SLIP

NOMINAL PIPE SIZE (IN.)	PART NUMBER	PRICE EACH ($)
3	875-030	372.41
4	875-040	461.43
6	875-060	630.26
6x6x4	875-532	480.31

NOTE: 150 psi working pressure non shock @ 73°F.

FLANGE
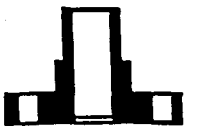

SPIGOT (VAN STONE STYLE)

NOMINAL PIPE SIZE (IN.)	PART NUMBER	PRICE EACH ($)
1/2	856-005	20.83
3/4	856-007	22.30
1	856-010	24.87
1-1/4	856-012	25.62
1-1/2	856-015	26.14
2	856-020	34.77
2-1/2	856-025	53.71
3	856-030	59.36
4	856-040	75.08
6	856-060	118.09
8	856-080	211.31
10	856-100	300.10
12	856-120	323.52

NOTE: Male end flanges are used in making flanged fittings or valves. Solvent cement male end into socket of fitting or valve. This eliminates the need for a nipple and a second solvent cemented joint.

NOTE: Flanges conform to ANSI 150 lb. dimensions. Maximum internal pressure 150 psi @ 73°F.

FLANGE
BLIND

NOMINAL PIPE SIZE (IN.)	PART NUMBER	PRICE EACH ($)
1/2	853-005	29.03
3/4	853-007	34.61
1	853-010	47.26
1-1/4	853-012	58.03
1-1/2	853-015	58.03
2	853-020	86.66
2-1/2	853-025	141.20
3	853-030	170.39
4	853-040	212.30
6	853-060	257.96
8	853-080	322.91
10*	853-100	539.98
12*	853-120	840.92

NOTE: For large diameter blind flanges, see page 1-12.

NOTE: * 75 psi maximum internal pressure rating @ 73°F.

PVC FITTINGS - SCHEDULE 80

PIPE NIPPLES MPT x MPT

CODE	DIA.	879	880	881	882	883	884	885	886	887	888	889	890	892
LEN.	SIZE	1/8	1/4	3/8	1/2	3/4	1	1-1/4	1-1/2	2	2-1/2	3	4	6
		PRICE EACH ($)												
005	CL	1.16	1.16	1.16	.89	.97	1.38	1.78	2.21	2.89	8.80	10.53	17.28	143.10
015	1-1/2	1.24	1.24	1.24	.97	.97	-	-	-	-	-	-	-	-
020	2	1.32	1.32	1.32	.97	1.03	1.51	1.86	2.27	-	-	-	-	-
025	2-1/2	1.32	1.32	1.54	1.03	1.11	1.65	2.05	2.48	3.16	-	-	-	-
030	3	1.46	1.46	1.62	1.11	1.16	1.73	2.27	2.75	3.43	9.96	11.48	-	-
035	3-1/2	1.54	1.54	1.73	1.16	1.30	1.86	2.48	2.97	3.73	10.72	12.47	-	-
040	4	1.62	1.62	1.89	1.24	1.38	2.00	2.62	3.16	4.00	11.48	13.42	17.98	148.50
045	4-1/2	1.62	1.62	2.11	1.38	1.59	2.27	2.89	3.38	4.45	12.23	14.36	19.14	-
050	5	1.73	1.73	2.19	1.46	1.65	2.48	3.11	3.65	4.67	12.99	15.31	20.28	-
055	5-1/2	1.89	1.89	2.38	1.51	1.78	2.62	3.29	3.86	4.94	13.80	16.28	21.44	-
060	6	2.19	2.19	2.46	1.59	1.92	2.75	3.43	4.13	5.24	14.55	17.23	22.57	172.80
070	7	2.35	2.35	2.65	1.78	2.05	3.02	3.86	4.54	5.91	16.07	19.14	24.89	-
080	8	2.51	2.51	2.81	1.86	2.27	3.24	4.13	4.94	6.40	17.60	21.06	27.38	197.10
090	9	2.73	2.73	3.08	2.05	2.48	3.65	4.48	5.37	7.02	19.14	22.95	29.86	-
100	10	2.92	2.92	3.29	2.21	2.67	3.86	4.81	5.70	7.56	20.66	24.89	32.35	221.40
110	11	3.08	3.08	3.46	2.35	2.89	4.13	5.16	5.81	8.18	22.19	26.78	34.83	-
120	12	3.29	3.29	3.65	2.48	3.02	4.32	5.43	6.13	8.67	23.71	28.73	37.50	240.30

NOTE: 1. Nipples are normally specified by pipe size, then length. (i.e., 1/4" x 2" would be code number 880-020.)
2. Special lengths and threaded one end (TOE) nipples are available up to 60" in length.

PVC FLANGED FITTINGS - SCHEDULE 80

Flanged fittings are fabricated from molded components shown on pages 1-2 and 1-6 of this section.

FLANGED TEE

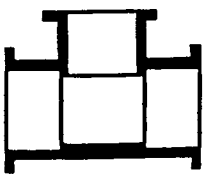

FLANGED 90° ELBOW

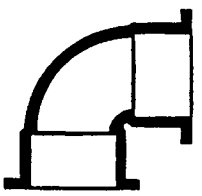

FLANGED 45° ELBOW

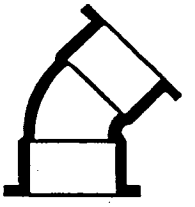

AVAILABLE ON REQUEST - CALL FOR QUOTE

PVC SCHEDULE 80 FITTINGS, 150 SERIES, UNIONS, CLASS 150 FLANGES & TANK ADAPTERS

WYE

Soc — 1/2"- 2" - 235 psi Maximum Internal Pressure Rating @73°F
3" or larger - 150 psi Maximum Internal Pressure Rating @73°F

PERF TRENCH WYE 20A

NEW 1-1/2"

Part Number	Size	Std Pk	Mstr Ctn	Disc Code	List Price Each
875-015	1-1/2	20	0	080	16.31
875-020	2	10	0	080	46.78
875-030	3	4	0	080	150.41
875-040	4	4	0	080	186.36
875-060	6	3	0	080	254.55
875-532	6x4	5	0	080	193.99
875-578F	8x2	1	0	083	326.40
875-580F	8x3	1	0	083	331.54
875-582F	8x4	1	0	083	351.54
875-585F	8x6	1	0	083	414.54
875-080F*	8	1	0	083	421.64
875-621F*	10x2	1	0	083	439.41
875-622F*	10x2-1/2	1	0	083	452.65
875-623F*	10x3	1	0	083	447.97
875-624F*	10x4	1	0	083	488.22
875-626F*	10x6	1	0	083	555.55
875-628F*	10x8	1	0	083	642.51
875-100F*	10	1	0	083	661.65
875-661F*	12x2	1	0	083	541.80
875-663F*	12x3	1	0	083	581.76
875-664F*	12x4	1	0	083	616.09
875-666F*	12x6	1	0	083	702.62
875-668F*	12x8	1	0	083	769.75
875-670F*	12x10	1	0	083	811.22
875-120F*	12	1	0	083	840.98

UNION

Soc w/Viton® O-Ring Seal — 235 psi @ 73°F ●

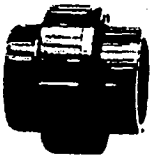

Part Number	Size	Std Pk	Mstr Ctn	Disc Code	List Price Each
857-002	1/4	25	150	080	10.58
857-003	3/8	25	100	080	10.58
857-005	1/2	10	60	080	5.66
857-007	3/4	10	40	080	7.20
857-010	1	10	40	080	8.23
857-012	1-1/4	5	20	080	16.33
857-015	1-1/2	5	0	080	18.49

UNION continued

Soc w/Viton® O-Ring Seal — 235 psi @ 73°F

Part Number	Size	Std Pk	Mstr Ctn	Disc Code	List Price Each
857-020	2	5	0	080	25.0[illegible]
857-030	3	5	0	080	46.6[illegible]
857-040	4	4	0	080	65.0[illegible]

UNION

Flpt w/Viton® O-Ring Seal — 235 psi @ 73°F

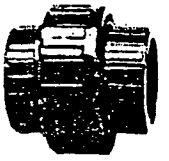

Part Number	Size	Std Pk	Mstr Ctn	Disc Code	List Price Each
858-002	1/4	25	150	080	11.4[illegible]
858-003	3/8	25	100	080	11.4[illegible]
858-005	1/2	10	60	080	6.5[illegible]
858-007	3/4	10	40	080	9.2[illegible]
858-010	1	10	40	080	12.2[illegible]
858-012	1-1/4	5	20	080	23.3[illegible]
858-015	1-1/2	5	0	080	28.9[illegible]
858-020	2	5	0	080	44.5[illegible]
858-030	3	5	0	080	112.5[illegible]
858-040	4	4	0	080	132.64

UNION

Soc x Flpt w/Viton® O-Ring Seal — 235 psi @ 73°F

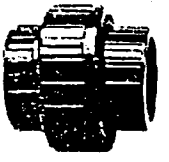

Part Number	Size	Std Pk	Mstr Ctn	Disc Code	List Price Each
859-005	1/2	10	60	080	6.9[illegible]
859-007	3/4	10	40	080	9.5[illegible]
859-010	1	10	40	080	12.3[illegible]
859-012	1-1/4	5	20	080	24.53
859-015	1-1/2	5	0	080	30.36
859-020	2	5	0	080	46.73
859-030	3	5	0	080	110.29
859-040	4	4	0	080	126.75

SPECIFICATION FOR PVC FABRICATED FITTINGS

14
APS

A. SCOPE

This specification covers plastic pressure and drainage fittings fabricated from PVC and reinforced with fiberglass where necessary. These fittings are for large piping systems up to 24" in diameter where molded or other machine manufactured fittings are not available.

B. MATERIALS

1. Pipe used shall be type I grade I PVC.
2. Welding rod when used shall be of the same material as the pipe.
3. Fiberglass shall be applied using a resin which chemically bonds to the PVC.

C. FABRICATOR QUALIFICATION

1. The manufacturer shall be regularly engaged in thermoplastic and fiberglass fabrication and all work shall be completed at a single location.
2. The manufacturer shall have engineering capability for product design and testing.
3. Fittings shall have been successfully in service for at least five years and the manufacturer must have product liability insurance of at least $1 million.

D. PRODUCT DEFINITION, DESIGN, TESTING AND MANUFACTURE

1. Fittings are to be socket end for solvent cement joining with a bell depth of 1/2 times the nominal diameter of the pipe and pipe interference at 1/2 the bell depth.
2. Elbows are to have mitered seams joined by butt fusion for diameters up to 16"; other fittings are to be hot air welded and reinforced with fiberglass where necessary.
3. The fabricator must be able to manufacture and warrant butt fusion welded fittings for pressures up to the rating of the pipe and shall have tested samples of fittings to exceed the following:
   a. Short term quick burst without FRP - 2.5 times pipe rating.
   b. Long term 1000 hour test without FRP - 2.0 times pipe rating.
4. Hot air welded fittings (18" to 24") shall have bonded fiberglass of sufficient thickness to handle pressures up to 50 to 100 PSI as outlined in NBS PS 15-69.
5. Reinforcement bond tests shall have been performed showing sufficient shear strength for design conditions.
6. Tolerance on fittings angles shall be within + or - one degree.
7. The manufacturer shall have a full line of fittings available to include at least couplings, 90 degree elbows, 45 degree elbows, tees, caps, WYE laterals, reducing couplings and bushings.

E. APPLICABLE DOCUMENTS OR STANDARDS

1. ASTM D-1784 - Plastic Materials
2. ASTM D-1785 - PVC Plastic Pipe (Schedule 40 and 80)
3. NBS PS 15-69 - Product std for reinforced polyester equipment.
4. ASTM D-2241 - PVC Plastic Pipe (SDR-PR)

F. AUTHORIZED MANUFACTURERS

Norcore Plastics, Inc. (Tacoma, WA) or equal.

CHARLOTTE
PIPE AND FOUNDRY COMPANY
P.O. Box 35430 • Telephone 704/372-5030
CHARLOTTE, NORTH CAROLINA 28235

I certify that all Plastic Pipe and Fittings, manufactured by Charlotte Pipe and Foundry, Plastic Division, are manufactured in the United States, and conform to the following standards:

SCH. 40 PVC PIPE
ASTM D-1784, ASTM D-1785
ASTM D-2665
FHA UM-79a
FEDERAL SPECIFICATION L-P-320a
IAPMO IS 9-90, IAPMO 8-89
NSF STANDARD NO. 14
IAPMO UPC ON SPECIFIED ITEMS
NSF STANDARD NO. 61

SCH. 40 PVC-DWV PIPE-CELLULAR CORE
ASTM D-4396, ASTM F-891
NSF STANDARD NO. 14
IAPMO UPC

SCH. 40 PVC-DWV FITTINGS
ASTM D-1784, ASTM D-2665
FHA UM-79a
FEDERAL SPECIFICATION L-P-320a
IAPMO IS 9-90
NSF STANDARD NO. 14
IAPMO UPC ON SPECIFIED ITEMS

PVC PRESSURE PIPE SDR-21
ASTM D-1784, ASTM D-2241
NSF STANDARD NO. 14
NSF STANDARD NO. 16

PVC PRESSURE PIPE SDR-26
ASTM D-1784, ASTM D-2441
NSF STANDARD NO. 14
NSF STANDARD NO. 16

PVC SEWER MAIN PIPE
ASTM D-1784
ASTM D-3034-SDR 35
ASTM D-3212, ASTM F 477

PVC WELL CASING PIPE
ASTM D-1784, ASTM F 480
NSF STANDARD NO. 14
NSF STANDARD NO. 61

CPVC SCH. 80 GRAY PIPE
ASTM D-1784, ASTM F-441
NSF STANDARD NO. 14
NSF STANDARD NO. 61

Terri L. Wilson
Notary Public
My Commission Expires: June 21, 2002

SCH. 40 ABS-DWV PIPE-CELLUAR CORE
ASTM D-3965, ASTM F-628
NSF STANDARD NO. 14

SCH. 40 ABS-DWV FITTINGS
ASTM D-3965, ASTM D-2661
FHA UM-79a
FEDERAL SPECIFICATION L-P-322b
IAPMO IS 5-90
NSF STANDARD NO. 14
IAPMO UPC ON SPECIFIED ITEMS

SCH. 40 PVC PRESSURE FITTINGS
ASTM D-1784, ASTM D-2466
NSF STANDARD NO. 14
NSF STANDARD NO. 61

PVC THIN WALL PIPE AND FITTINGS
ASTM D-1784, ASTM D-2949
NSF STANDARD NO. 14

PVC SEWER MAIN PIPE-CELLULAR CORE
ASTM D-4396, ASTM F-891 PS 50

PVC SCH. 80 PVC PIPE

ASTM D-1784, ASTM D-1785 PVC 1120
NSF STANDARD NO. 14
NSF STANDARD NO. 61

CPVC SCH. 40 GRAY PIPE
ASTM D-1784, ASTM F-441
NSF STANDARD NO. 14
NSF STANDARD NO. 61

CPVC CTS FLOW-GUARD GOLD PIPE & FITTINGS
ASTM D-2846
FHA UM-61a
NSF STANDARD NO. 14
NSF STANDARD NO. 61

Very truly yours,

Alan Biggers

Alan Biggers
Senior Vice President

Thread Sealants

Ultra Seal© - Is a smooth, non-hardening, Teflon* based white paste that contains no valve destroying grit and will not transfer taste or odor. It also has an anti-galling compound for easy valve/joint disassembly after years of use. It is safe for both metal and plastic applications. Ultra Seal is brushable from -50°F to 600°F, and will seal gas lines to 3,000 PSI and liquids to 10,000 PSI.

Super Seal© - Is a smooth, soft-setting, yellow thread sealant that also contains no valve destroying grit and will not transfer taste or odor. It will remain soft and pliable for the life of the system and is safe for both metal and plastic applications. Super Seal is brushable from -50°F to 400°F and will seal gas lines to 3,000 PSI and liquid lines to 6,000 PSI.

Master Seal© - Is a very-slow-setting, non-drying blue paste thread sealant that contains no valve destroying grit. It is ideal for prefabrication work, or applications that require more "open" time. It is safe for metal and plastic applications. Master Seal is brushable from -50°F to 400°F and will seal gas lines to 3,000 PSI and liquid lines to 6,000 PSI.

Specialty Sealants and Products

T. Christy Enterprises markets an array of specialty products for sealing virtually every piping application. These products range from Electra Seal® — electrical potting compound to Permatex #2C** for gasketed or flanged applications. Please consult our separate Technical Data Sheets for specific information regarding these products.

BIG BLUE©	XHD©	AMIGO©	RED HOT CLEAR PRIMER©	PURPLE PRIMER
GRAY	GRAY/WHITE	CLEAR	CLEAR	PURPLE
HEAVY	PASTE-LIKE	REGULAR	WATER THIN	WATER THIN
Ideal for applications requiring a high viscosity excellent industrial quality solvent cement	Ideal for fabrication applications with high gap filling capacity and minimum shrinkage	Ideal for lateral lines and small diameter applications	Ideal for all primer/cleaner applications requiring fast, deep etching capabilities. Chemically as hot as our "Red Hot" solvent cements but without resin	Ideal for all PVC/CPVC primer applications requiring a deep etching, slow acting, high quality purple primer
MEDIUM	SLOW	VERY FAST SET	FAST ACTING	FAST ACTING
Through 12" all Schedules & Classes	Through 24" all Schedules & Classes	Through 4" Interference Fit	All PVC & CPVC	All PVC & CPVC
Exceeds D-2564	Exceeds D-2564	Exceeds D-2564	Meets F-656	Meets F-656
½ Pt., Pint, Quart, Gallon	Pint, Quart, Gallon	¼ Pt., ½ Pt., Pint, Quart, Gallon	Quart, Gallon	¼ Pt., ½ Pt., Pint, Quart, Gallon

*DuPont Trademark **Loctite Company Trademark

EDMUND A. GRAY COMPANY, Inc.
SINCE 1910
STEEL, BRASS, PLASTIC, STAINLESS AND ALUMINUM PIPE NIPPLES
2277 East Fifteenth Street (213) 625-2723 • FAX: (213) 625-5734 Los Angeles, CA 90021-2841

May 7, 1998

Familian Pipe & Supply
880 Mariposa St.
San Francisco, CA 94107

Attn: Steve H.

This is to certify that all of our pipe nipples are made at our factory in Los Angeles, California.

We follow all of the applicable ANSI standards and all of our pipe meets the most current A.S.T.M. specifications (see below).

Because we manufacture all nipples in Los Angeles, at least 51% of the total product cost is incurred in the U.S.A. and called Domestic for your use.

Thank you for your interest in our product.

Very truly yours,
Edmund A. Gray Co., Inc.
Anthony J. Delgatto
Anthony J. Delgatto
Sales Manager

Standard Black, Galvanized, Brass, Extra-Heavy Welded and Seamless:

Nipple Spec.	=	A.S.T.M. A-733-93
Fed Spec.	=	WWN-351
Pipe Spec.	=	A.S.T.M. A-53 A
Brass & Chrome Plated Nipple Spec.	=	A.S.T.M. B-687-88
Extra-Heavy Welded Pipe Spec.	=	A.S.T.M. A-53 A
Std. & Extra Heavy Brass Pipe Spec.	=	A.S.T.M. B-43
All Seamless Pipe Spec.	=	A.S.T.M. A-106-B / ASME SA-106-B

"IF IT'S A PIPE NIPPLE.....WE HAVE IT"