AR_N00217_004073
HUNTERS POINT
SSIC NO. 5090.3.A

FINAL
JANUARY TO MARCH 2004
SEVENTEENTH QUARTERLY
GROUNDWATER SAMPLING REPORT
PARCEL B, HUNTERS POINT SHIPYARD
SAN FRANCISCO, CALIFORNIA

Navy Contract:
N68711-00-D-0004
Delivery Order 0074

Prepared by:
KLEINFELDER
5015 Shoreham Place
San Diego, California 92122
(858) 320-2000

Under Contract With:
CDM
CDM Federal Programs Corporation
9444 Farnham Street, Suite 210
San Diego, California 92123
858-268-3383

October 15, 2004

This page left blank intentionally

Prepared for:

Base Realignment and Closure
Program Management Office West
1230 Columbia Street, Suite 1100
San Diego, California 92101

FINAL
JANUARY TO MARCH 2004
SEVENTEENTH QUARTERLY
GROUNDWATER SAMPLING REPORT
PARCEL B, HUNTERS POINT SHIPYARD
SAN FRANCISCO, CALIFORNIA

Kleinfelder Project No. 41330-2.09

Prepared by:

Melissa Valdovinos
Staff Engineer

Christopher S. Johnson, RG, CHG
Chief Hydrogeologist
Technical Resources Center

Prepared by:

KLEINFELDER

5015 Shoreham Place
San Diego, California 92122
(858) 320-2000

Under Contract With:

CDM

CDM Federal Programs Corporation
9444 Farnham Street, Suite 210
San Diego, California 92123
858-268-3383

October 15, 2004

This page left blank intentionally

Errata

To: Pat Brooks and Mark Walden

From: Gary Goodemote and Lynne Srinivasan

Date: September 2006

Re: First Quarter 2004 (1Q04 or Quarter 17) Well IR10MW59A Measurement and Sampling

Water levels for monitoring well IR10MW59A were not obtained during this quarter of sampling because this well was not listed in the Draft Sampling and Analysis Plan (TtEMI December 2003) as a well for which water levels should be collected.

Well IR10MW59A is located inside Building 123 and has a total depth of 17.8 feet below ground surface (bgs). Well IR10MW74A is located approximately 5.5 feet away from Well IR10MW59A inside Building 123 and has a total depth of 36.9 feet bgs. Because the wells were not labeled and are located so close together, Well IR10MW74A was inadvertently sampled instead of Well IR10MW59A.

This error was corrected after a comprehensive well inspection was completed. To avoid this error in the future, the wells have been clearly labeled with paint on the concrete around the well and with indelible ink on the well cap. In addition, crews have been provided additional training to verify total depth against well construction details before sampling. If there is a discrepancy, the field crews are to call the field manager for assistance.

Historic sampling data for Well IR10MW59A indicate elevated levels of trichloroethene (TCE), ranging in concentrations from 340 micrograms per liter (µg/L) (2Q01 or Q7) to 180 µg/L (4Q03 or Q16). In October 2003, the Navy conducted a zero-valent iron injection (ZVI) study on this well. The initial TCE concentration after the injection was 460 µg/L (10/27/03) with a final TCE concentration from the study of 100 µg/L (3/16/04).

The TCE concentration from 1Q04 (Q17) was 1.9J µg/L (3/30/04). The 2-order magnitude difference in TCE concentrations between the quarterly monitoring results and the ZVI study results is due to the fact that the adjacent deeper well (Well IR10MW74A) was sampled. Analytical data presented in this report for Well IR10MW59A are actually for Well IR10MW74A.

The following pages in the text should be replaced:

Table 3, page 3-3
Table 4, pages 3-4 and 3-5
Table 8, page 3-16 and 3-17 – Q17 only
Appendix A, pages A-31 and A-32
Appendix B, Monitoring Well IR10MW59A, insert correction flysheet
Appendix C, Chain-of-Custody No. 15657, insert correction flysheet

These replacement pages are attached.

TABLE OF CONTENTS

Section		Page
	Abbreviations & Acronyms	vii
1.0	**INTRODUCTION**	**1-1**
2.0	**GROUNDWATER ELEVATIONS**	**2-1**
2.1	GROUNDWATER LEVEL MEASUREMENT PROCEDURES	2-1
2.2	INTERPRETATION OF Q17 GROUNDWATER ELEVATION CONTOURS	2-2
3.0	**GROUNDWATER SAMPLING**	**3-1**
3.1	GROUNDWATER SAMPLING PROCEDURES	3-1
3.2	LABORATORY ANALYSES	3-6
3.3	GROUNDWATER SAMPLING ANALYTICAL RESULTS	3-7
3.3.1	POC Monitoring Wells	3-12
3.3.2	Sentinel Monitoring Wells	3-12
3.3.3	Post-Remedial Action Monitoring Wells	3-12
3.3.4	Hexavalent Chromium Monitoring Well	3-12
3.3.5	VOC Monitoring Wells	3-13
3.3.6	On- and Off-Site Migration Monitoring Wells	3-13
3.3.7	Utility Line Monitoring Well	3-13
3.3.8	Supplemental Characterization Wells	3-13
3.4	DATA QUALITY	3-17
3.5	DEVIATIONS FROM THE DRAFT SAP	3-18
4.0	**CONCLUSIONS**	**4-1**
5.0	**REFERENCES**	**5-1**

TABLES

Table 1	Monitoring Well Sampling Inventory	1-4
Table 2	Summary of Groundwater Level Measurements, March 26, 2004	2-4
Table 3	Summary of Wells Sampled and Analyses Performed March 2004	3-3
Table 4	Summary of Quarterly Samples Collected March 2004	3-4
Table 5	Summary of Proposed Trigger Levels for Additional IR-10 and IR-26 Groundwater Sampling Results	3-8
Table 6	Summary of Trigger Levels for Ramp Groundwater Sampling Results	3-9
Table 7	Comparison of Trigger Level Criteria for Ramp Wells	3-10
Table 8	Historical Results for TCE, DCE, and Vinyl Chloride at Monitoring Wells In and Near the VOC Groundwater Plume in IR-10	3-15

FIGURES

Figure 1	Site Location Map
Figure 2	Well Location Map
Figure 3	A-Aquifer Groundwater Contour Map, March 26, 2004
Figure 4	TCE ISO-Concentration Map

TABLE OF CONTENTS (Continued)

APPENDICES

Appendix A Summary of Seventeenth Quarterly Analytical Results and Trigger Levels, January to March 2004 Sampling Event
Appendix B Monitoring Well Sampling Sheets, January to March 2004 Sampling Event
Appendix C Chain-of-Custody Records for Samples, January to March 2004 Sampling Event
Appendix D Data Validation Reports, January to March 2004 Sampling Event
Appendix E Field Duplicate Pair Results, January to March 2004 Sampling Event
Appendix F Monitoring Well Installation Report and Logs of Borings For March 2004
Appendix G San Francisco Public Utilities Commission Batch Discharge Permit

ABBREVIATIONS AND ACRONYMS

APPL	Agriculture & Priority Pollutants Laboratories, Inc.
ASTM	American Society for Testing and Materials
Bay	San Francisco Bay
CLP	Contract Laboratory Program
DBCP	1,2-dibromo-3-chloropropane
DCE	Dichloroethene
DI	Deionized
EPA	U.S. Environmental Protection Agency
FSP	Field sampling plan
HGAL	Hunters Point groundwater ambient level
HPS	Hunters Point Shipyard
IR	Installation Restoration
LDC	Laboratory Data Consultants, Inc.
µg/L	Microgram per liter
MS/MSD	Matrix spike/matrix spike duplicate
Navy	U.S. Department of the Navy
PAH	Polynuclear aromatic hydrocarbon
PCB	Polychlorinated biphenyl
POC	Point-of-compliance
Q17	Quarter Seventeen
QA/QC	Quality assurance and quality control
RAMP	Remedial action monitoring plan
RPD	Relative percent difference
SAP	Sampling and Analysis Plan
SFPUC	San Francisco Public Utilities Commission
SOP	Standard operating procedure
SVOC	Semi-volatile organic compound

TCE	Trichloroethene
TtEMI	Tetra Tech EM, Inc.
TIZ	Tidally influenced zone
TPH	Total petroleum hydrocarbons
TPHe	Total petroleum hydrocarbons as extractables
TPHg	Total petroleum hydrocarbons as gasoline
VOC	Volatile organic compound
ZVI	zero valence iron injection treatability study

1.0 INTRODUCTION

Kleinfelder prepared this quarterly groundwater sampling report for the first quarter of the fifth year of groundwater monitoring (or quarter seventeen [Q17]) under the remedial action monitoring plan (RAMP) (Tetra Tech EM, Inc. [TtEMI], 1999) at Parcel B of Hunters Point Shipyard (HPS) in San Francisco, California (Figure 1), for the U.S. Department of the Navy (Navy), Naval Facilities Engineering Command, Southwest Division. Groundwater monitoring for Q17 encompasses the period from January through March, 2004. Field sampling was conducted from March 2 through March 30, 2004, in accordance with the Draft Sampling and Analysis Plan Basewide Groundwater Monitoring Program (SAP) (TtEMI, 2003). The SAP contains all requirements for Parcel B monitoring (as outlined in the RAMP) and for Parcels C, D and E monitoring.

Groundwater elevations were measured on March 26, 2004. This quarterly report contains groundwater analytical data collected from Parcel B wells and groundwater elevation data collected from Parcel B, C, D and E wells. No groundwater sampling was performed at Parcel C, D and E wells during this quarterly event, due to schedule constraints. Monitoring for Parcels B through E will be completed during the next quarter. The work was performed by Kleinfelder and Brown and Caldwell under Navy Contract N68711-00-D-0004 and Delivery Order 0074.

During the Parcel B remedial investigation (PRC Environmental Management, Inc., 1996), the Navy sampled 98 groundwater-monitoring wells. Twenty-four of these wells were originally included under the RAMP program. Since then, six of the original wells were decommissioned, and eight existing or newly-installed monitoring wells were added to the RAMP. Replacement wells for five of the original six decommissioned RAMP wells were re-installed during this quarterly event. Thirty-seven (37) wells were sampled during Q17. The Navy currently monitors 31 Parcel B wells under the RAMP program. Six Supplemental Characterization wells (installed in 2003) were included in Q17 to monitor the progress of the Zero Valence Iron Injection Treatability Study (ZVI). The RAMP wells are grouped into the following eight categories:

- **Point-of-Compliance (POC) Monitoring Wells:** Located near the high-tide line of the tidally influenced zone (TIZ), which is the POC.
- **Sentinel Monitoring Wells:** Located near the inland edge of the approximate 5-year buffer zone.

- **Post-Remedial Action Monitoring Well:** Five wells located near remedial action excavations in Installation Restoration (IR) Site 07, or IR-07.
- **Volatile Organic Compound (VOC) Monitoring Wells:** Located in and near the VOC plume in IR-10.
- **On- and Off-Site Migration Monitoring Wells:** Two wells along the western boundary of Parcel B.
- **Utility Line Monitoring Well:** One well located near IR-06.

All of these wells are sampled quarterly, except for the Sentinel wells, which are sampled semi-annually. The Sentinel wells were sampled during Q17. The wells that are monitored as part of this Parcel B program are listed in Table 1. Table 1 also includes well construction details.

In addition to the RAMP wells listed above, the Navy sampled the following types of wells during Q17:

- **Hexavalent Chromium Monitoring Well:** RAMP VOC monitoring well IR10MW12A to monitor hexavalent chromium near Building 123.
- **Supplemental Characterization Monitoring Wells:** Monitoring wells IR26MW46A, IR26MW47A, and IR26MW48A. These wells were installed in the vicinity of exploratory excavation –05 in January 2002 to evaluate the potential risk from groundwater in eastern IR-26 to aquatic receptors in the Bay. Six additional wells (IR10MW61A, IR10MW62A, IR10MW71A, IR10MW76A, IR10MW79A, and IR10MW80A) were installed to delineate the plume beneath IR-10 and to monitor the progress of the ZVI treatability study.

Figure 2 shows the locations of RAMP wells, IR sites, decommissioned wells, and wells added to the program.

The groundwater-monitoring program for Parcel B has the following objectives:

- Assess whether "trigger-level" concentrations are exceeded along the inland edge of the TIZ (trigger levels are contaminant concentrations at which additional actions may be necessary).
- Evaluate the effect of remedial actions involving contaminated soil on analyte concentrations in A-aquifer groundwater at IR-07 and IR-26.
- Evaluate the migration of hazardous substances in A-aquifer groundwater from IR-06 and IR-10 to the San Francisco Bay (Bay).

- Evaluate on- and off-site migration of hazardous substances in A-aquifer groundwater from the area northwest of IR-07 and IR-18.
- Monitor the potential degradation of trichloroethene (TCE) to byproducts (including vinyl chloride) in A-aquifer groundwater at IR-10 and IR-24.

Following this introductory section, Section 2.0 discusses groundwater elevation survey procedures and the interpretation of the groundwater potentiometric surface for Q17. Section 3.0 discusses groundwater sampling procedures, analytical methods, analytical results, and the quality of the data. Section 4.0 presents conclusions based on Q17 results. Section 5.0 lists the references used to prepare this report. A full evaluation of the data will be reported in the Annual Groundwater Monitoring Report (at the conclusion of Q20).

Appendix A presents the analytical results from the sampling event and compares the results with trigger levels. Appendices B and C present monitoring well sampling sheets and chain-of-custody records for the sampling event, respectively. Appendix D includes data validation reports for the Q17 sampling event. Appendix E presents the field duplicate pair results. Appendix F is the report documenting the installation and development of the newest monitoring wells for the Basewide Groundwater Monitoring Program. Appendix G provides a copy of the batch wastewater discharge permit for disposal of the purge groundwater generated during Q17.

Table 1
Monitoring Well Sampling Inventory
Seventeenth Quarterly Groundwater Sampling Report, Parcel B
Hunters Point Shipyard, San Francisco, California

Type of Monitoring Well	Monitoring Well	Sampling Frequency[1]	Date Installed	Well Casing Diameter	Screened Interval[4] or Well Depth[5]
Point of Compliance (POC)	IR07MW19A	Quarterly	12/6/1990	4-inch	6 to 15.75 feet
	IR07MWS-2		6/28/1999	4-inch	3 to 17.6 feet
	IR26MW41A		11/11/1994	4-inch	6 to 20.7 feet
	IR46MW37A		3/17/1994	4-inch	6 to 20.85 feet
	IR07MWS-4		3/3/2004	4-inch	6 to 16 feet
Point of Compliance (POC) & Volatile Organic Compounds (VOC)	IR10MW31A1[2]	Quarterly	5/3/1999	4-inch	7 to 17 feet
	PA50MW01A[2]		3/8/1993	4-inch	6 to 15.84 feet
Sentinel	IR07MW23A	Semi-annually[3]	12/6/1990	4-inch	7 to 17 feet
	IR07MW27A		4/8/1999	4-inch	11 to 21 feet
	IR61MW05A		7/28/1995	4-inch	6 to 21 feet
	UT03MW11A		5/19/1994	4-inch	5 to 20 feet
Sentinel and VOC	IR06MW45A	Quarterly - VOC only Semi-annually[3] for remaining analytes	9/17/1991	4-inch	4 to 13.2 feet
	IR10MW28A[2]		9/19/1991	2-inch	7 to 17 feet
	IR25MW17A		5/19/1994	4-inch	5.5 to 19.8 feet
Post-Remedial Action	IR07MW20A1	Quarterly	12/10/1990	4-inch	6 to 23.64 feet
	IR07MW21A1		3/3/2004	4-inch	6 to 16 feet
	IR07MW24A		3/3/2004	4-inch	5 to 15 feet
	IR07MW25A		3/3/2004	4-inch	8 to 18 feet
	IR07MW26A		3/3/2004	4-inch	5 to 15 feet
Hexavalent Chromium & VOC	IR10MW12A	Quarterly	12/30/1988	4-inch	3 to 18 feet
Volatile Organic Compounds (VOC)	IR10MW13A1	Quarterly	12/22/1988	4-inch	5 to 19.92 feet
	IR10MW14A		1/4/1989	4-inch	5 to 19.53 feet
	IR10MW33A		6/28/1999	4-inch	5 to 15.27 feet
	IR10MW59A		3/16/2001	4-inch	8.5 to 17.5 feet
	IR25MW37A		11/30/2000	4-inch	7 to 16 feet
On- and Off-Site Migration	IR07MW28A	Quarterly	5/11/1999	4-inch	5 to 15 feet
	IR18MW21A		5/6/1999	4-inch	12 to 19.15 feet
Utility Line	IR06MW42A	Quarterly	6/5/1990	4-inch	8.5 to 13.5 feet
Supplemental Characterization Wells	IR26MW46A	Quarterly	1/16/2002	4-inch	7 to 17 feet
	IR26MW47A		1/17/2002	4-inch	5 to 15 feet
	IR26MW48A		1/17/2002	4-inch	9 to 19 feet
	IR10MW61A		8/5/2003	4-inch	11 to 21 feet
	IR10MW62A		8/5/2003	4-inch	11 to 21 feet
	IR10MW71A		8/17/2003	4-inch	14 to 24 feet
	IR10MW76A		8/15/2003	4-inch	8 to 18 feet
	IR10MW79A		9/12/2003	4-inch	11 to 21 feet
	IR10MW80A		9/12/2003	4-inch	11 to 21 feet

Notes:
1. For at least 5 years.
2. These wells are also classified as monitoring wells for volatiles.
3. Usually first and third quarters; during both the dry and wet seasons.
4. Screened interval data from Draft SAP ([TtEMI, 2003).
5. Well depths as recorded on 16th Quarter Monitoring Well Sampling Sheets (Appendix A).

2.0 GROUNDWATER ELEVATIONS

Groundwater elevation data are collected during each quarterly sampling event. This section discusses groundwater level measurement procedures (Section 2.1) and the interpretation of Parcel B groundwater potentiometric surface contours for Q17 (Section 2.2).

2.1 GROUNDWATER LEVEL MEASUREMENT PROCEDURES

The Navy measured groundwater levels in monitoring wells in Parcels B, C, D, and E to obtain basewide data about local groundwater flow patterns. The Navy measured water levels at these wells in accordance with the Draft SAP (TtEMI, 2003). Measuring and sampling procedures are also discussed in detail in the Data Management Plan, which is part of the planning documents for the quarterly sampling (Kleinfelder, 2004). Studies and Remedial Design. Section 8.3.3.2 of the Draft SAP (TtEMI, 2003) details the procedures that were followed during measurement of water levels on March 26, 2004. Depth to water was measured using an electronic water-level indicator. During a single day within a 9-hour period, groundwater levels were measured in 308 of the 403 monitoring wells listed in Table G-1 of the Draft SAP (TtEMI, 2003) starting at low tide to reduce tidal influence on the measurements. Inconsistencies found between map well identification numbers and text/table numbers in the Draft SAP resulting in a slightly higher number of wells proposed for groundwater level measurement. In addition, some wells detailed on the map, could not be found. Several wells were inaccessible due to being covered by natural and artificial objects, or were found damaged and could not be measured. However, all wells listed in the Draft SAP for groundwater level measurement were attempted to be measured in the field. Of the 308 monitoring wells measured, 53 were from Parcel B, 87 were from Parcel C, 59 were from Parcel D, and 109 were from Parcel E. This data is consistent with previous quarters for Parcel B groundwater level monitoring.

The Navy calculated groundwater elevations in feet above mean sea level (based on the National Geodetic Vertical Datum from 1929) by subtracting depth to water from surveyed top-of-casing elevations. Table 2 summarizes the depth-to-water measurements and groundwater elevations for each measured well. Figure 3 shows the basewide groundwater elevation contours for the A-aquifer generated from water levels measured during Q17.

2.2 INTERPRETATION OF Q17 GROUNDWATER ELEVATION CONTOURS

Figure 3 shows the groundwater elevation contours for the A-aquifer generated from water levels measured during Q17. The Q17 groundwater flow directions are consistent with the directions interpreted from data collected during previous sampling events.

Basewide groundwater movement in the A-aquifer is towards the shoreline and San Francisco Bay with areas of localized depressions and mounds. Parcels B and E both have these depressions and mounds, whereas Parcels C and D generally appear to have fairly low-angle groundwater gradients.

Areas of groundwater elevations below-sea-level occur along the shorelines of Parcels B, C, D and in the interior of Parcel E. The most pronounced area of groundwater elevations below-sea-level is along the eastern boundary of Parcel E. This particular area of below-sea-level groundwater elevations trends north-south.

Several areas on-site had water line and sewer line up-grades, closures and repairs. It is possible that leakage from any one of these lines may have affected the historical direction of groundwater movement. As such, the repair of these lines may alter the direction and rate of movement in the A-aquifer. Quarter 17 was the first quarter for which groundwater elevations were measured following the water and sewer line work. It may take several rounds of monitoring before groundwater elevations appear to have returned to more normal conditions. As such, there is insufficient data to definitively identify areas where these repairs have altered the direction and rate of groundwater movement at this time. Subsequent rounds of groundwater elevation measurements may prove sufficient to account for the possible changes as the result of this repair work. However, caution must be exercised not to attribute changes in groundwater elevation and direction of movement to these repairs when natural variations may be the actual cause. Therefore, additional data will need to be collected before a definite correlation can be established.

Groundwater movement for each Parcel can be described as follows:

- Parcel B: Groundwater flows north-northeast towards the shoreline and the San Francisco Bay. There appears to be a small, trough-like depression in the IR07/IR18 area on the northwestern portion of Parcel B. This trough appears consistent with previous quarters, and may be the consequence of groundwater moving into Parcel B from off-site. The possibility also exists that fill material in this particular area may be influencing groundwater movement. A groundwater mound is present in the vicinity of well IR20MW17A. Data

from adjacent wells IR06MW45A and IR26MW41A, which comprise the IR-20 mound in previous quarters, was not available for contouring. Low groundwater elevations are present adjacent to the mound to the east in the vicinity of well IR25MW17A and the west at IR-26, creating a groundwater divide in the IR25/26 area. This groundwater divide appears somewhat consistent with previous quarters of monitoring.

- Parcel C: In general, groundwater moves towards the shoreline and San Francisco Bay, which is to the east-southeast in Parcel C. Groundwater movement may be influenced by the higher topography and steep groundwater gradient in the vicinity of the boundary with Parcel A. . A certain degree of "flattening" of the groundwater gradient may be occurring, possibly the result of sewer line repairs in this area.

- Parcel D: Groundwater gradients are fairly low in Parcel D, with the general movement of groundwater to the east. There is a low-relief groundwater mound oriented southwest-northeast in the vicinity of Building 411.This mound appears less pronounced than previous quarters. This may be the result of sewer line and water line repairs in this general area; however, this assessment will require further review pending forthcoming water level elevation measurements from future monitoring quarters. The below-sea-level depression on the western boundary of Parcel D influences groundwater movement to the west along the parcel boundary with Parcel E.

- Parcel E: Groundwater movement in Parcel E is very complex. There are three groundwater mounds, one along the northern boundary of the Parcel where it abuts Parcel A in the vicinity of IR01MW12A, one along the southwestern shoreline in the vicinity of IR02MW114A2, and a very small one in the vicinity of IR36MW126A. The IR01MW12A mound may be an artifact of potentially questionable data from this well, and as such will be closely monitored over the next several quarters. The occurrence and appearance of the mound is relatively consistent with previous quarters. The cause of the IR01MW114A2 mound is unclear, but does appear relatively consistent with previous monitoring quarters. Between the two larger mounds is a small depression, in the vicinity of IR12MW12A.Along the eastern edge of Parcel E is a pronounced groundwater trough, and the largest area of below-sea-level groundwater elevations. Groundwater from the eastern portion of Parcel E appears to flow into this depression. This depression is generally consistent with previous quarters, and will require further review to verify.

Table 2
Summary of Groundwater Level Measurements, March 26, 2004
Seventeenth Quarterly Groundwater Sampling Report, Parcel B
Hunters Point Shipyard, San Francisco, California

Parcel	Monitoring Well ID No.	Time	Depth to Groundwater (feet below TOC)	TOC Elevation (feet above msl)	Groundwater Elevation (feet above msl)
B	IR06MW42A	1347	10.07	11.89	1.82
	IR07MW19A	1135	9.42	9.56	0.13
	IR07MW20A1	1140	9.68	9.26	-0.42
	IR07MW21A	915	14.09	14.68	0.59
	IR07MW23A	850	12.99	15.76	2.77
	IR07MW24A	905	11.67	13.56	1.89
	IR07MW25A	903	9.97	11.91	1.94
	IR07MW26A	949	12.11	12.69	0.58
	IR07MW27A	951	12.22	16.15	3.93
	IR07MW28A	835	9.10	12.03	2.93
	IR10MW12A	1110	6.07	9.08	3.01
	IR10MW13A1	959	7.90	9.92	2.02
	IR10MW14A	1035	4.20	10.23	6.03
	IR10MW28A	1050	13.68	13.57	-0.11
	IR10MW29A1	1010	6.92	9.15	2.23
	IR10MW31A1	936	10.20	10.34	0.14
	IR10MW32A	1127	8.03	9.77	1.74
	IR10MW33A	950	6.89	10.17	3.28
	IR18MW100B	909	12.46	17.94	5.48
	IR18MW101B	923	13.70	18.89	5.19
	IR18MW200A	858	22.92	26.96	4.04
	IR18MW21A	902	13.81	17.56	3.75
	IR18MW91A	851	13.92	19.00	5.08
	IR18MW92A	934	16.80	20.70	3.90
	IR20MW17A	1511	6.87	10.51	3.64
	IR24MW06A	1500	9.41	10.25	0.84
	IR25MW17A	1512	8.80	10.31	1.51
	IR26MW40A	1440	8.63	9.89	1.26
	IR26MW43A	1325	7.06	7.09	0.03
	IR26MW44A	1314	7.02	8.25	1.23
	IR26MW46A	1306	6.67	8.08	1.41
	IR26MW47A	1253	8.10	7.75	-0.35
	IR26MW48A	1302	6.81	8.13	1.32
	IR46MW38A	1020	8.00	9.78	1.78
	IR46MW39A	1337	10.20	9.75	-0.45
	IR46MW40A	1330	9.77	9.29	-0.48
	IR46MW41A	1443	6.84	10.00	3.16
	IR46MW43A	1350	9.12	8.98	-0.14
	IR46MW46A	1340	9.56	9.61	0.05
	IR46MW47A	1300	10.43	9.69	-0.74
	IR46MW48A	1315	9.37	8.89	-0.48
	IR60MW08A	1115	9.45	9.40	-0.05
	IR61MW05A	1115	7.37	10.11	2.74
	IR62MW07A	900	6.63	10.20	3.57
	IR62MW08A	920	6.50	10.35	3.85
	IRO7MW93A	838	16.83	19.53	2.70
	IRO7MW94A	840	13.26	15.15	1.89
	PA24MW02A	1301	9.79	9.46	-0.33
	PA50MW01A	1111	7.64	9.18	1.54
	PA50MW02A	1336	7.77	7.80	0.03

Table 2 (Continued)
Summary of Groundwater Level Measurements, May 26, 2004
Seventeenth Quarterly Groundwater Sampling Report, Parcel B
Hunters Point Shipyard, San Francisco, California

Parcel	Monitoring Well ID No.	Time	Depth to Groundwater (feet below TOC)	TOC Elevation (feet above msl)	Groundwater Elevation (feet above msl)
B	UT02MW15A	911	8.58	12.57	3.99
	UT03MW11A	936	6.42	9.94	3.52
	UT03MW12A	947	6.51	10.10	3.59
C	IR06MW32A	1417	3.35	9.90	6.55
	IR06MW35A	1435	3.54	9.73	6.19
	IR06MW40A	1405	6.88	10.08	3.20
	IR06MW41A	1401	7.58	9.78	2.20
	IR06MW49F	1452	6.51	11.49	4.98
	IR06MW52F	1432	3.34	9.70	6.36
	IR06MW55F	1535	20.44	32.34	11.90
	IR06MW57F	1505	16.82	28.02	11.20
	IR06MW59A1	1412	4.35	9.46	5.11
	IR25MW20A	1710	10.16	10.48	0.32
	IR25MW37A	1545	5.86	10.07	4.21
	IR25MW37B	1548	7.71	10.21	2.50
	IR25MW39A	1638	8.07	11.21	3.14
	IR25MW55A	1619	11.25	NA	NA
	IR25MW60A1	1649	6.70	9.57	2.87
	IR25MW60A2	1651	7.05	9.48	2.43
	IR25MW61A1	1653	8.07	9.56	1.49
	IR25MW61A2	1655	8.39	9.67	1.28
	IR25MW900B	1642	8.19	11.02	2.83
	IR28MW122A	1143	8.24	7.48	-0.76
	IR28MW123A	1134	8.52	8.09	-0.43
	IR28MW124A	1158	7.30	7.14	-0.16
	IR28MW125A	1208	6.10	7.74	1.64
	IR28MW126A	1212	5.87	7.76	1.89
	IR28MW127A	1250	5.59	7.63	2.04
	IR28MW136A	1448	8.00	7.55	-0.45
	IR28MW140F	1154	6.40	7.66	1.26
	IR28MW149A	1634	7.31	8.92	1.61
	IR28MW150A	1530	7.83	7.87	0.04
	IR28MW155A	1334	7.20	8.57	1.37
	IR28MW169A	1026	7.60	9.69	2.09
	IR28MW171A	1728	5.96	6.67	0.72
	IR28MW171B	1726	6.40	7.19	0.79
	IR28MW172F	946	5.96	8.57	2.61
	IR28MW173B	1403	6.08	8.06	1.98
	IR28MW188F	1610	7.38	9.64	2.26
	IR28MW200A	1735	7.53	8.28	0.75
	IR28MW216F	1050	5.42	8.38	2.96
	IR28MW21A	1041	6.42	9.56	3.14
	IR28MW268A	1314	5.83	7.90	2.07
	IR28MW272A	1735	8.12	7.85	-0.27
	IR28MW286A	1655	7.42	9.81	2.39
	IR28MW287A	1101	6.61	9.31	2.70
	IR28MW297A	1315	8.00	7.68	-0.32
	IR28MW298A	1717	7.10	8.04	0.94
	IR28MW299B	1700	6.84	9.60	2.76
	IR28MW308A	1305	5.40	7.63	2.23

Table 2 (Continued)
Summary of Groundwater Level Measurements, May 26, 2004
Seventeenth Quarterly Groundwater Sampling Report, Parcel B
Hunters Point Shipyard, San Francisco, California

Parcel	Monitoring Well ID No.	Time	Depth to Groundwater (feet below TOC)	TOC Elevation (feet above msl)	Groundwater Elevation (feet above msl)
C	IR28MW309B	1636	7.47	9.06	1.59
	IR28MW310F	1611	5.72	7.62	1.90
	IR28MW313F	1738	8.10	12.17	4.07
	IR28MW315A	1625	5.42	8.84	3.42
	IR28MW315B	1635	6.83	9.03	2.20
	IR28MW315F	1630	7.13	8.97	1.84
	IR28MW339A	1551	6.58	8.47	1.89
	IR28MW340A	1547	6.84	8.65	1.81
	IR28MW352A	1606	6.15	8.05	1.90
	IR28MW354B	1349	6.41	8.19	1.78
	IR28MW394A	1320	8.21	9.26	1.05
	IR28MW394B	1720	7.60	9.02	1.42
	IR28MW395F	1035	6.59	9.12	2.53
	IR28MW396A	950	6.82	8.99	2.17
	IR28MW396B	1004	6.43	9.09	2.66
	IR28MW397A	1112	6.44	9.13	2.69
	IR28MW397B	1107	6.72	9.37	2.65
	IR28MW398A	1647	6.97	9.33	2.36
	IR28MW398B	1730	6.72	8.92	2.20
	IR28MW399B	1538	6.64	7.82	1.18
	IR28MW401B	1425	7.13	8.58	1.45
	IR28MW932F	1655	6.92	8.87	1.95
	IR28MW934F4	1653	7.15	9.05	1.90
	IR29MW48A	1720	7.42	8.04	0.62
	IR29MW58F	1624	6.83	8.54	1.71
	IR29MW85F	1108	6.58	9.66	3.08
	IR30MW01F	1627	5.68	8.92	3.24
	IR30MW03F	1625	2.56	8.89	6.33
	IR30MW04F	1720	5.38	8.96	3.58
	IR50MW13A	1724	6.28	NA	NA
	IR58MW24F	1630	6.09	15.48	9.39
	IR58MW25F	1632	6.00	9.72	3.72
	IR58MW26A	1634	5.30	8.24	2.94
	IR58MW31A	1043	6.00	9.00	3.00
	IR58MW31F	1041	7.95	9.22	1.27
	IR58MW33B	1044	6.31	9.00	2.69
	IR64MW05A	1645	5.97	8.00	2.03
	PA28MW51A	1440	6.36	8.41	2.05
	PA50MW03A	1348	6.71	7.03	0.32
	PA50MW04A	1722	5.85	7.56	1.71
D	IR08MW38A	1422	6.50	6.82	0.32
	IR08MW-6	1118	4.85	4.88	0.03
	IR09MW35A	1325	6.99	8.71	1.73
	IR09MW36A	1358	8.10	8.87	0.77
	IR09MW37A	1344	9.32	9.15	-0.18
	IR09MW38A	1311	8.30	9.02	0.72
	IR09MW39A	1330	7.49	8.18	0.69
	IR09MW44A	1402	7.25	8.78	1.53
	IR09MW45F	1250	8.31	8.46	0.15
	IR09MW51F	1256	6.11	8.64	2.53

Table 2 (Continued)
Summary of Groundwater Level Measurements, May 26, 2004
Seventeenth Quarterly Groundwater Sampling Report, Parcel B
Hunters Point Shipyard, San Francisco, California

Parcel	Monitoring Well ID No.	Time	Depth to Groundwater (feet below TOC)	TOC Elevation (feet above msl)	Groundwater Elevation (feet above msl)
D	IR09MW52A	1355	9.71	9.59	-0.13
	IR09MW54B	1316	9.22	9.26	0.04
	IR09MW55B	1322	8.61	9.07	0.46
	IR09MW61A	1602	8.96	8.49	-0.47
	IR09MW62A	1308	9.20	8.50	-0.70
	IR09MW63A	1302	6.91	8.66	1.75
	IR17MW12A	1600	6.40	8.00	1.60
	IR22MW07A	1310	8.49	7.74	-0.75
	IR22MW08A	938	7.78	8.77	0.99
	IR22MW15A	1320	10.04	11.00	0.96
	IR22MW16A	1300	7.22	7.86	0.64
	IR22MW20A	1330	6.91	7.84	0.93
	IR33MW120B	1450	6.87	9.45	2.58
	IR33MW121B	1412	4.58	7.20	2.62
	IR33MW61A	1012	11.12	12.26	1.14
	IR33MW62A	1139	7.14	8.21	1.07
	IR33MW64A	1018	8.36	9.30	0.94
	IR33MW65A	1032	7.41	8.32	0.91
	IR33MW66A	1035	7.93	8.91	0.98
	IR34MW01A	1050	7.19	8.62	1.43
	IR34MW36A	1452	7.79	8.80	1.01
	IR34MW36B	1116	8.66	9.23	0.57
	IR34MW37A	1105	8.05	8.78	0.73
	IR34MW37B	1100	8.05	8.60	0.55
	IR35MW01A	952	7.93	8.85	0.92
	IR37MW01A	1553	7.82	7.59	-0.23
	IR37MW26B	1548	6.13	8.14	2.01
	IR38MW01A	1515	4.33	4.28	-0.05
	IR38MW02A	950	3.19	2.88	-0.31
	IR44MW08A	1410	5.99	7.24	1.25
	IR50MW15A	1015	5.88	7.00	1.12
	IR55MW01A	1030	5.09	5.14	0.05
	IR55MW02A	1050	7.23	7.27	0.04
	IR55MW04A	1000	4.20	4.80	0.60
	IR67MW04A	1451	6.96	8.17	1.21
	IR70MW04A	1125	9.74	9.82	0.08
	IR70MW11A	1109	6.14	9.04	2.90
	IR70MW12A	1135	8.41	8.44	0.03
	IR71MW03A	1400	8.16	8.31	0.15
	IR71MW12B	1406	5.63	8.23	2.60
	PA16MW17A	1643	7.47	8.45	0.98
	PA33MW36A	1500	7.82	9.24	1.42
	PA33MW37A	1445	7.60	9.27	1.67
	PA39MW01A	1442	4.61	4.53	-0.08
	PA39MW02A	1438	6.28	6.00	-0.28
	PA50MW05A	1035	5.28	6.07	0.79
	PA50MW07A	1140	8.16	8.71	0.55
	PA50MW11A	1004	9.37	7.66	-1.71
	PA50MW12A	1540	8.60	8.62	0.02

Table 2 (Continued)
Summary of Groundwater Level Measurements, May 26, 2004
Seventeenth Quarterly Groundwater Sampling Report, Parcel B
Hunters Point Shipyard, San Francisco, California

Parcel	Monitoring Well ID No.	Time	Depth to Groundwater (feet below TOC)	TOC Elevation (feet above msl)	Groundwater Elevation (feet above msl)
	IR01MW02B	1149	7.48	20.61	13.13
	IR01MW03A	1154	13.98	19.89	5.91
	IR01MW12A	1451	4.04	18.25	14.21
	IR01MW16A	1159	20.04	24.66	4.62
	IR01MW17B	1158	23.80	29.55	5.75
	IR01MW18A	1307	19.10	23.61	4.51
	IR01MW26B	1322	18.93	24.02	5.09
	IR01MW31A	1138	7.82	13.81	5.99
	IR01MW38A	1114	13.38	17.37	3.99
	IR01MW42A	1611	8.94	13.28	4.34
	IR01MW43A	1431	9.12	12.16	3.04
	IR01MW44A	1358	7.01	9.22	2.21
	IR01MW47B	1430	7.65	12.31	4.66
	IR01MW53B	1414	4.51	10.01	5.50
	IR01MW58A	1130	6.19	9.19	3.00
	IR01MW62A	1116	5.35	7.91	2.55
	IR01MWI-2	1548	11.18	13.22	2.04
	IR01MWI-3	1046	11.51	13.80	2.29
	IR01MWI-5	1329	20.04	24.51	4.47
	IR01MWI-7	1059	3.19	5.81	2.62
	IR01MWI-8	1111	4.15	6.64	2.49
	IR01MWI-9	1103	4.62	8.04	3.42
	IR02MW101A1	1305	10.04	11.23	1.19
E	IR02MW101A2	1307	10.46	11.22	0.76
	IR02MW114A1	1405	6.85	13.63	6.78
	IR02MW114A2	1410	6.07	12.43	6.36
	IR02MW114A3	1408	7.51	13.29	5.78
	IR02MW126A	1411	9.11	11.36	2.25
	IR02MW127B	1419	11.01	14.59	3.58
	IR02MW147A	1255	5.39	8.36	2.97
	IR02MW149A	1514	4.72	8.72	4.00
	IR02MW175A	1336	7.76	7.74	-0.02
	IR02MW179A	1349	10.16	9.82	-0.35
	IR02MW183A	1336	9.20	10.40	1.20
	IR02MW196A	1349	7.60	8.05	0.45
	IR02MW206A1	1328	7.65	7.43	-0.22
	IR02MW209A	1323	6.56	6.34	-0.22
	IR02MW210B	1120	9.21	9.17	-0.04
	IR02MW298A	1358	6.96	11.79	4.83
	IR02MW299A	1136	10.58	10.56	-0.02
	IR02MW300A	1342	9.21	9.00	-0.21
	IR02MW372A	1417	10.80	14.21	3.41
	IR02MW373A	1405	8.76	11.34	2.58
	IR02MW89A	1349	8.15	10.08	1.93
	IR02MWB-1	1249	5.10	8.46	3.36
	IR02MWB-2	1519	9.28	11.88	2.60
	IR02MWB-3	1430	10.62	12.95	2.33

Table 2 (Continued)
Summary of Groundwater Level Measurements, May 26, 2004
Seventeenth Quarterly Groundwater Sampling Report, Parcel B
Hunters Point Shipyard, San Francisco, California

Parcel	Monitoring Well ID No.	Time	Depth to Groundwater (feet below TOC)	TOC Elevation (feet above msl)	Groundwater Elevation (feet above msl)
E	IR02P97AA	1128	5.78	7.09	1.31
	IR02P97AB	1128	8.99	8.00	-0.99
	IR03MW218A1	1024	10.74	11.92	1.18
	IR03MW218A2	1020	11.86	12.26	0.40
	IR03MW224A	1100	10.92	10.92	0.00
	IR03MW228B	1022	9.48	12.12	2.64
	IR03MW342A	1054	8.53	8.48	-0.05
	IR03MW369A	1052	8.65	10.01	1.36
	IR03MW371A	1015	11.49	12.48	0.99
	IR03MW373B	1104	4.00	7.87	3.87
	IR04MW13A	1532	10.42	12.55	2.13
	IR04MW31A	1509	10.35	12.53	2.18
	IR04MW37A	1557	8.24	9.54	1.30
	IR04MW38A	1017	9.10	9.76	0.66
	IR04MW40A	1639	5.85	7.16	1.31
	IR05MW76A	1326	4.03	4.97	0.94
	IR05MW82A	1318	10.06	12.00	1.94
	IR11MW26A	1422	8.47	9.33	0.86
	IR11MW27A	1440	8.04	9.88	1.83
	IR12MW11A	1514	7.38	11.68	4.30
	IR12MW12A	1459	10.40	8.40	-2.00
	IR12MW13A	1521	10.46	12.52	2.06
	IR12MW14A	1534	7.22	9.23	2.01
	IR12MW15A	945	6.24	7.28	1.04
	IR12MW16A	1000	8.04	8.57	0.53
	IR12MW17A	1504	10.11	12.46	2.35
	IR12MW20A	1615	10.40	12.27	1.87
	IR12MW21A	1309	8.97	10.42	1.45
	IR13MW12A	1130	4.44	4.12	-0.32
	IR14MW09A	1501	10.01	9.93	-0.08
	IR14MW10A	1506	8.98	8.89	-0.09
	IR14MW12A	1512	8.55	8.52	-0.03
	IR15MW06A	1145	11.04	11.11	0.07
	IR15MW07A	1516	11.21	11.18	-0.03
	IR15MW10F	1404	10.03	10.98	0.95
	IR36MW09A	1455	4.43	5.00	0.57
	IR36MW11A	1448	8.63	8.55	-0.08
	IR36MW121A	1505	7.55	6.96	-0.59
	IR36MW122A	1532	8.21	7.64	-0.56
	IR36MW123B	1536	4.69	7.55	2.86
	IR36MW125A	1459	6.81	6.55	-0.25
	IR36MW127A	1500	6.18	6.45	0.27
	IR36MW128A	1500	8.52	8.01	-0.51
	IR36MW129B	1503	4.83	7.80	2.97
	IR36MW135A	1434	7.97	7.85	-0.12
	IR36MW14A	1413	5.87	5.52	-0.35
	IR36MW17A	1543	8.21	8.36	0.15
	IR39MW21A	1325	7.93	7.92	-0.01
	IR39MW23A	1330	5.90	5.61	-0.29
	IR39MW24A	1404	5.13	4.80	-0.33

Table 2 (Continued)
Summary of Groundwater Level Measurements, May 26, 2004
Seventeenth Quarterly Groundwater Sampling Report, Parcel B
Hunters Point Shipyard, San Francisco, California

Parcel	Monitoring Well ID No.	Time	Depth to Groundwater (feet below TOC)	TOC Elevation (feet above msl)	Groundwater Elevation (feet above msl)
E	IR39MW63A	1350	7.25	NA	NA
	IR72MW32A	1553	8.70	10.08	1.38
	IR72MW33A	1620	8.49	12.00	3.51
	IR73MW04A	1357	12.30	13.48	1.18
	IR74MW01A	1257	11.75	13.16	1.41
	PA36MW02A	1550	8.75	8.02	-0.73
	PA36MW07A	1438	5.81	6.80	0.99
	PA36MW08A	1400	7.56	7.65	0.09
	PA38MW01A	1520	8.33	NA	NA
	PA50MW08B	1146	9.11	7.48	-1.63
	PA50MW09A	1358	5.63	5.00	-0.63
	PA50MW10A	1537	10.63	8.45	-2.18

Notes:
ID = identification
TOC = top of casing
msl = mean sea level

3.0 GROUNDWATER SAMPLING

3.1 GROUNDWATER SAMPLING PROCEDURES

This section discusses sampling procedures, analytical methods, analytical results, data quality, as well as any Q17 deviations from the Draft SAP (TtEMI, 2003).

The Navy based low-flow sampling procedures for Q17 on American Society for Testing and Materials (ASTM) guidelines and the Draft SAP (TtEMI, 2003). Standard operating procedures (SOPs) were followed to the extent possible. However, on many wells, low-flow purging is not always achievable due to limitations of the flow-through cell used in conjunction with the water quality meters. Refer to Appendix A of the "Draft Technical Memorandum, Parcel B Groundwater Evaluation" (TtEMI, 2001) for a discussion of low-flow study results.

The Navy collected all Q17 groundwater samples at Parcel B in accordance with the Draft SAP (TtEMI, 2003), RAMP, and the applicable SOP for groundwater sampling, which is included in the field sampling plan (FSP) (TtEMI, 2000a). Tables 3 and 4 list the analyses performed for each well and the samples collected at each well, respectively. Groundwater samples were collected with a stainless-steel low-flow submersible pump per ASTM standards.

The wells were pumped until water quality parameters stabilized, as measured with a Horiba U-10 water quality meter. At a minimum, 2 liters of water were purged before groundwater samples were taken. The field team monitored groundwater temperature, pH, turbidity, specific conductance, and dissolved oxygen with a Horiba U-10, and oxidation-reduction potential with a separate probe manufactured by Oakton Instruments at regular intervals during purging at a rate of roughly once every liter of water removed. Field personnel recorded parameters on monitoring well sampling sheets, which are included in Appendix B of this report. Purging was complete when measurements of groundwater parameters stabilized in accordance with the Draft SAP (TtEMI, 2003). This procedure removes stagnant, standing water from the well. It is replaced with groundwater flowing into the well casing directly from the aquifer, thereby providing a more representative groundwater sample.

After purging was complete, field personnel collected a groundwater sample. Samples were collected in order of decreasing sensitivity to volatilization or to oxidation-reduction reactions. Table 3 of SOP No. 10, included in Appendix A of the FSP for the RAMP (TtEMI, 2000a), summarizes the preferred order of sample collection.

All groundwater samples were collected in the field and shipped, within analytical method holding times, on ice in sealed coolers and maintained at 4°C plus or minus 2°C to the approved receiving laboratory, Agriculture & Priority Pollutants Laboratories, Inc. (APPL) of Fresno, California in accordance with Draft SAP (TtEMI, 2003). Groundwater samples were not filtered for dissolved metals analysis. Therefore, all analytical results are for total metals, not dissolved metals. APPL is not presented in the Partial List of Navy-Approved Laboratories in Appendix D of the Draft SAP (TtEMI, 2003), but APPL is in fact a Navy-approved laboratory. Per Navy contract requirements and in accordance with Section 9.0 of the SAP, an analytical laboratory quality audit was performed on APPL. No significant discrepancies were identified to preclude the use of APPL for the analytical services on this HPS program.

During groundwater sampling activities, all portions of the electronic water-level indicators exposed to groundwater were decontaminated before each use by washing with a mixture of tap water and Liquinox soap solution and rinsed with tap water then deionized (DI) water. Submersible pumps and flow-through cells were decontaminated before each use by washing the exterior of each pump with DI water and Liquinox soap solution and then pumping a solution of DI water and Liquinox soap through the pump. The pump was then flushed with tap water followed by DI water. New or dedicated polyethylene tubing was used for pumping each well; tubing used to carry the outflow purge water into a 55-gallon drum was decontaminated before each use by pumping DI water and Liquinox soap through the tubing.

Purge water from the wells was placed in U.S. Department of Transportation-approved 55-gallon drums and transferred to a 5,000-gallon holding tank located at the staging area. Approximately 3,000 gallons of purge water resulting from the Q17 sampling event. The water was tested, and analytical results met sanitary sewer discharge criteria established by the City of San Francisco. The San Francisco Public Utilities Commission (SFPUC) approved a Batch Discharge Permit allowing the Navy to discharge the 3,000 gallons of purge water into the sanitary sewerage system. On June 3 and 4, 2004, the Navy discharged the purge water from the Q17 into a sanitary sewer manhole in Spear Street on HPS. Historically at HPS, purge water from groundwater sampling events has met the City of San Francisco's discharge requirements. A copy of the SFPUC Batch Discharge Permit is included as Appendix G.

Table 3
Summary of Wells Sampled and Analyses Performed March 2004
Seventeenth Quarterly Groundwater Sampling Report, Parcel B
Hunters Point Shipyard, San Francisco, California

Well Type	Well ID	VOCs (OLM04.2, 8260B)	VOCs (OLC03.2)	Metals (ILM05.3)	Hex Chrom (7196A)	TPH-e (8015)	TPH-g (8015)	SVOCs (8270C, OLM04.2)	Pest/PCB (8081A, 8082, OLM04.3)
POC	IR07MW19A		X	X	X	X	X		
POC	IR07MWS-2		X	X	X	X	X		
POC	IR26MW41A		X	X	X	X	X		
POC	IR46MW37A		X	X	X	X	X		
POC	IR07MWS-4		X	X	X	X	X		
POC and VOC	IR10MW31A1		X	X	X	X	X		
POC and VOC	PA50MW01A		X	X	X	X	X		
Sentinel	IR07MW23A		X	X	X	X	X		
Sentinel	IR07MW27A		X	X	X	X	X	X	X
Sentinel	IR61MW05A		X	X	X	X	X		
Sentinel	UT03MW11A		X	X	X	X	X		
Sentinel and VOC	IR06MW45A		X	X	X	X	X		
Sentinel and VOC	IR10MW28A		X	X	X	X	X		
Sentinel and VOC	IR25MW17A		X	X	X	X	X		
Post-Remedial Action	IR07MW20A1		X	X	X	X	X		
Post-Remedial Action	IR07MW21A1		X	X	X	X	X		
Post-Remedial Action	IR07MW24A		X	X	X	X	X		
Post-Remedial Action	IR07MW25A		X	X	X	X	X		
Post-Remedial Action	IR07MW26A		X	X	X	X	X		
Hexavalent Chromium	IR10MW12A		X		X				
VOC	IR10MW13A1		X						
VOC	IR10MW14A		X						
VOC	IR10MW33A		X					X	
VOC	IR10MW74A		X						
VOC	IR25MW37A		X						
On- and Off-	IR07MW28A		X	X	X	X	X	X	X
On- and Off-	IR18MW21A		X	X	X	X	X	X	X
Utility Line	IR06MW42A		X	X	X	X	X	X	X
Supplemental	IR26MW46A			X	X			X	X
Supplemental	IR26MW47A			X	X			X	X
Supplemental	IR26MW48A			X	X			X	X
Supplemental	IR10MW61A	X							
Supplemental	IR10MW62A	X							
Supplemental	IR10MW71A	X							
Supplemental	IR10MW76A	X							
Supplemental	IR10MW79A	X							
Supplemental	IR10MW80A	X							

Notes:

POC = Point-of-compliance
VOC = Volatile organic compound
ID = identification
TPHe = Total petroleum hydrocarbons as extractables
TPHg = Total petroleum hydrocarbons as gasoline
Hex Chrom = Hexavalent Chromium
SVOC = Semi-volatile organic compound
Pest = pesticide
PCB = Polychlorinated biphenyl

Table 4
Summary of Quarterly Groundwater Samples Collected March 2004
Seventeenth Quarterly Groundwater Sampling Report, Parcel B
Hunters Point Shipyard, San Francisco, California

Sample ID	Well ID	Sample Type	Well Type	Sample Date	Sample Time	Sample Method
Groundwater Samples						
0413H001	IR10MW14A	Groundwater	VOC Monitoring	3/22/2004	1545	Pump
0413H002	IR10MW31A1	Groundwater	VOC Monitoring	3/22/2004	1545	Pump
0413H003	IR06MW42A	Groundwater	Utility Line	3/23/2004	1210	Pump
0413H004	IR10MW62A	Groundwater	Supplemental	3/23/2004	1505	Pump
0413H005	IR07MW23A	Groundwater	Sentinel	3/24/2004	1241	Pump
0413H006	IR10MW28A	Groundwater	Sentinel and VOC	3/24/2004	915	Pump
0413H007	IR07MW24A	Groundwater	Post-Remedial	3/25/2004	1145	Pump
0413H008	IR10MW79A	Groundwater	Supplemental	3/25/2004	1445	Pump
0413H010	IR07MWS-4	Groundwater	POC Well	3/26/2004	1055	Pump
0413M001	IR10MW13A1	Groundwater	VOC Monitoring	3/22/2004	1515	Pump
0413M002	IR10MW12A	Groundwater	Hex Chromium	3/22/2004	953	Pump
0413M003	IR07MW19A	Groundwater	POC Well	3/23/2004	1140	Pump
0413M004	IR07MW19A-dup	Field Duplicate	POC Well	3/23/2004	1213	Pump
0413M005	IR10MW61A	Groundwater	Supplemental	3/23/2004	1503	Pump
0413M006	IR07MW20A1	Groundwater	Post-Remedial	3/24/2004	1057	Pump
0413M007	IR07MW20A1-dup	Field Duplicate	Post-Remedial	3/24/2004	1057	Pump
0413M008	IR07MW27A	Groundwater	Sentinel	3/24/2004	1443	Pump
0413M009	IR18MW21A	Groundwater	On/Off-Site	3/25/2004	920	Pump
0413M010	IR07MW21A1	Groundwater	Post-Remedial	3/25/2004	1145	Pump
0413M012	IR07MW25A	Groundwater	Post-Remedial	3/26/2004	1035	Pump
0413T001	IR10MW71A	Groundwater	Supplemental	3/26/2004	1109	Pump
0414H009	IR25MW17A	Groundwater	Sentinel and VOC	3/29/2004	915	Pump
0414H011	IR26MW46A	Groundwater	Supplemental	3/29/2004	1030	Pump
0414H012	IR26MW46A-dup	Field Duplicate	Supplemental	3/29/2004	1045	Pump
0414H013	IR26MW48A	Groundwater	Supplemental	3/29/2004	1115	Pump
0414H014	PA50MW01A	Groundwater	POC and VOC	3/29/2004	1440	Pump
0414H015	IR06MW45A	Groundwater	Not Classified	3/30/2004	930	Pump
0414H016	IR10MW74A	Groundwater	VOC Monitoring	3/30/2004	1120	Pump
0414H017	IR10MW76A	Groundwater	Supplemental	3/30/2004	1340	Pump
0414M011	IR07MWS-2	Groundwater	Not Classified	3/29/2004	935	Pump
0414M013	IR26MW41A	Groundwater	POC Well	3/29/2004	1138	Pump
0414M014	IR26MW41A-dup	Field Duplicate	POC Well	3/29/2004	1129	Pump
0414M016	IR07MW28A	Groundwater	On/Off-Site	3/30/2004	935	Pump
0414M017	IR10MW33A	Groundwater	VOC Monitoring	3/30/2004	1215	Pump
0414M018	IR25MW37A	Groundwater	VOC Monitoring	3/30/2004	1517	Pump
0414T002	IR07MW31A	Groundwater	Not Classified	3/30/2004	931	Pump
0414T003	IR26MW47A	Groundwater	Supplemental	3/29/2004	1123	Pump
0414T004	IR26MW47A-dup	Field Duplicate	Supplemental	3/29/2004	1129	Pump
0414T005	IR46MW37A	Groundwater	POC Well	3/29/2004	1433	Pump
0414T006	UT03MW11A	Groundwater	Sentinel	3/30/2004	938	Pump
0414T007	IR10MW80A	Groundwater	Supplemental	3/30/2004	1340	Pump
0414T008	IR10MW80A-dup	Field Duplicate	Supplemental	3/30/2004	1352	Pump
Field Quality Control						
IR06TB006	Trip Blank	Field QC	Trip Blank	3/30/2004	1515	NA
IR07EB001	Equipment Rinsate	Field QC	IR07MW23A	3/24/2004	1300	NA
IR07EB002	Equipment Rinsate	Field QC	IR07MW20A1	3/24/2004	1130	NA
IR07EB004	Equipment Rinsate	Field QC	IR07MW25A	3/26/2004	1055	NA
IR07EB005	Equipment Rinsate	Field QC	IR07MWS-4	3/26/2004	1120	NA
IR07TB001	Trip Blank	Field QC	Trip Blank	3/23/2004	1515	NA
IR07TB002	Trip Blank	Field QC	Trip Blank	3/24/2004	1600	NA

Table 4 (Continued)
Summary of Quarterly Groundwater Samples Collected March 2004
Seventeenth Quarterly Groundwater Sampling Report, Parcel B
Hunters Point Shipyard, San Francisco, California

Sample ID	Well ID	Sample Type	Well Type	Sample Date	Sample Time	Sample Method
Field Quality Control (Continued)						
IR09EB002	Equipment Rinsate	Field QC	IR09MW62A	3/24/2004	1445	NA
IR09TB001	Trip Blank	Field QC	Trip Blank	3/23/2004	1521	NA
IR10EB001	Equipment Rinsate	Field QC	IR10MW71A	3/26/2004	1129	NA
IR10EB002	Equipment Rinsate	Field QC	IR10MW76A	3/26/2004	1515	NA
IR10EB003	Equipment Rinsate	Field QC	IR10MW79A	3/26/2004	1500	NA
IR10EB010	Equipment Rinsate	Field QC	IR10MW74A	3/30/2004	1145	NA
IR10EB011	Equipment Rinsate	Field QC	IR10MW33A	3/30/2004	1215	NA
IR10TB001	Trip Blank	Field QC	Trip Blank	3/23/2004	1515	NA
IR10TB002	Trip Blank	Field QC	Trip Blank	3/23/2004	1515	NA
IR10TB003	Trip Blank	Field QC	Trip Blank	3/25/2004	1519	NA
IR10TB004	Trip Blank	Field QC	Trip Blank	3/26/2004	1340	NA
IR10TB007	Trip Blank	Field QC	Trip Blank	3/30/2004	1430	NA
IR25TB005	Trip Blank	Field QC	Trip Blank	3/29/2004	915	NA
IR46EB006	Equipment Rinsate	Field QC	IR46MW37A	3/29/2004	1500	NA
IR61EB007	Equipment Rinsate	Field QC	IR61MW05A	3/29/2004	1455	NA
PA50EB008	Equipment Rinsate	Field QC	PA50MW01A	3/29/2004	1440	NA
UT03EB009	Equipment Rinsate	Field QC	UT03MW11A	3/30/2004	1008	NA

Notes:
ID = identification
dup = duplicate
QC = quality control
NA = not applicable
POC = point of compliance
VOC = volatile organic compounds

3.2 LABORATORY ANALYSES

All groundwater samples were submitted for analysis to APPL, located in Fresno, California. APPL is certified by the State of California Environmental Laboratory Accreditation Program (ELAP) and the Naval Facilities Engineering Service Command. Appendix C presents the chain-of-custody (COC) forms that accompanied the samples collected during Q17. Groundwater samples were analyzed in accordance with the Draft SAP (TtEMI, 2003) using the following analytical methods from the U.S. Environmental Protection Agency (EPA) Contract Laboratory Program (CLP) and *Test Methods for Evaluating Solid Waste, Physical/Chemical Methods* (SW-846, 3rd Edition):

- VOCs by EPA Methods CLP OLC03.2 and OLM04.2 (RAMP groundwater samples only) and 8260B;
- Total metals by EPA Methods CLP ILM05.3 (RAMP groundwater samples only) and 6010B;
- Hexavalent chromium and mercury by EPA Method 7196A and 7470A, respectively;
- Total petroleum hydrocarbons (TPH)-extractables (i.e., diesel and waste oil) by EPA Method 8015;
- TPH-purgables (i.e., gasoline) by EPA Method 8015;
- Organophosphorus pesticides by EPA Method 8141;
- Semi-volatile organic compounds (SVOCs) by EPA Methods CLP OLM04.2 (RAMP groundwater sample only), and 8270C; and
- Organochloride pesticides and polychlorinated biphenyls (PCBs) by EPA Method CLP OLM04.3 modified (RAMP groundwater sample only), 8081, and 8082.

Note that the originally referenced EPA CLP metals method ILM04.0 was updated by the EPA with EPA CLP metals method ILM05.3 in March 2004. Additionally, EPA CLP pesticides and PCBs method OLM04.2 modified was updated by the EPA with EPA CLP pesticides and PCBs method OLM0.4.3 modified in March 2003. The updated CLP methods continue to meet the requirements specified in the Draft SAP (TtEMI, 2003).

3.3 GROUNDWATER SAMPLING ANALYTICAL RESULTS

This section discusses analytical results from Q17 for each type of well sampled. Appendix A summarizes Q17 analytical results. The RAMP does not define trigger levels for monitoring well IR10MW12A or for the new wells installed in IR-26. The six ZVI wells are defined as Supplemental Characterization wells (same trigger levels as IR-26 wells for comparison -Table 5). Table 5 lists the proposed trigger levels for these wells. Table 6 lists the trigger levels for all other wells, and Table 7 compares the chemical-specific trigger levels.

Table 5
Summary of Proposed Trigger Levels For Additional IR-10 and IR -26 Groundwater Sampling Results Seventeenth Quarterly Groundwater Sampling Report, Parcel B Hunters Point Shipyard, San Francisco, California

Monitoring Well	Chemical	Trigger Level[a]
IR10MW12A[b] (hexavalent chromium well)	Hexavalent chromium	50 µg/L (based on NAWQC)
IR26MW46A, IR26MW47A, and IR26MW48A (Supplemental Characterization wells)	Aroclor-1260	0.20 µg/L (based on analytical QL)[c]
	Arsenic	36 µg/L (based on NAWQC)
	Chlordane[d]	0.01 µg/L (based on analytical QL)[c]
	Copper	28.0 µg/L (based on HGAL)
	Chromium (total)	1,030 µg/L (based on NAWQC)
	Hexavalent chromium	50 µg/L (based on NAWQC)
	Lead	14.4 µg/L (based on HGAL)
	Manganese	8,140 µg/L (based on HGAL)
	Mercury	0.60 µg/L (based on HGAL)
	Zinc	81 µg/L (based on NAWQC)
	Benzo(a)anthracene	300 µg/L (based on NAWQC)
	Benzo(a)pyrene	300 µg/L (based on NAWQC)
	Benzo(b)fluoranthene	300 µg/L (based on NAWQC)
	Benzo(k)fluoranthene	300 µg/L (based on NAWQC)
	Chrysene	300 µg/L (based on NAWQC)
	Dibenzo(a,h)anthracene	300 µg/L (based on NAWQC)
	Indeno(1,2,3-cd)pyrene	300 µg/L (based on NAWQC)

Notes:

a Action and screening levels are the higher of the applicable NAWQC for exposure of aquatic organisms (if no criterion for chronic exposure is available, 1/10th of the criterion for acute exposure is used) or the HGAL, unless otherwise specified.

b A significant increase in vinyl chloride concentrations at this well will result in notification of the Base Realignment and Closure Cleanup Team.

c Screening levels for these compounds are based on analytical QL specific to the laboratory subcontracted for this project. The QL for aroclor 1260 is 0.09 µg/L, which satisfies the NAWQC criteria of 0.19 µg/L. For Q17, the QL for aroclors was 0.2 µg/L, which satisfies the NAWQC criteria. For chlordane, the lowest attainable QL of 0.01 µg/L is used as a trigger level.

d No criteria for chlordane were noted in the remedial action monitoring plan or the record of decision (TtEMI, 1999, 1997).

µg/L microgram per liter
HGAL Hunters Point groundwater ambient level
IR Installation Restoration
NAWQC National Ambient Water Quality Criteria
QL Quantitation limit

Sources:

TtEMI 1997. "Final Record of Decision, Parcel B, Hunters Point Shipyard, San Francisco, California." October 9.

TtEMI 1999. "Final Remedial Action Monitoring Plan, Parcel B, Hunters Point Shipyard, San Francisco, California." July 2.

Table 6
Summary of Trigger Levels For Ramp Groundwater Sampling Results
Seventeenth Quarterly Groundwater Sampling Report, Parcel B
Hunters Point Shipyard, San Francisco, California

Monitoring Well Type	Trigger Levels
POC Monitoring Wells	NAWQC or HGALs, whichever is higher[a]; TPH trigger levels from the petroleum hydrocarbons CAP
Sentinel Monitoring Wells	Ten times the trigger levels for POC monitoring wells
Post-Remedial Action Monitoring Wells	Same as the trigger levels for POC monitoring wells
VOC Monitoring Wells	For vinyl chloride, same as the trigger levels for POC monitoring wells for vinyl chloride For TCE and cis-1,2-DCE, 10 times the trigger levels for POC monitoring wells or measured increase in vinyl chloride Inhalation trigger levels for monitoring well inside building
On- and Off-site Migration Monitoring Wells	Well IR07MW28A: same as POC well trigger levels Well IR18MW21A: 10 times POC well trigger levels
Utility Line Monitoring Well	Southeast Water Pollution Control Plant discharge requirements

Notes:

a Or the lowest attainable laboratory quantitation limit, if that is higher

CAP Corrective action plan
DCE Dichloroethene
HGAL Hunters Point groundwater ambient level
NAWQC National Ambient Water Quality Criteria
POC Point-of-compliance
RAMP Remedial Action Monitoring Plan
TCE Trichloroethene
TPH Total petroleum hydrocarbons
VOC Volatile organic compound

Table 7
Comparison of Trigger Level Criteria for Ramp Wells
Seventeenth Quarterly Groundwater Sampling Report, Parcel B
Hunters Point Shipyard, San Francisco, California

Constituent	POC Well Trigger Level (µg/L)[a]	Sentinel Well Trigger Level (µg/L)[b]	VOC Well Trigger Level (µg/L)[c]	Utility Line Well Trigger Level (µg/L)[d]	HGAL (µg/L)[e]	NAWQC (µg/L)[e]	Parcel B ROD Trigger Level (µg/L)[f]
TPH-d and TPH-g	NA	NA	NA	NA	NA	NA	NA[g]
PAHs	300	3,000	NA	NA	NA	300	--
PCBs[h]	0.19	1.9	NA	5,000[i]	NA	0.1[j]	--
1,2-Dichloroethene	85[k]	85[k]	85	NA	NA	224,000	85[l]
Trichloroethene	114[m]	114[m]	114	NA	NA	2,000[n]	114[l]
Vinyl Chloride	55	55[o]	55	200	NA	55[p]	55[l]
Antimony	500	5,000	NA	15,000[i]	43.3	500	500
Arsenic	36	360	NA	4,000	27.3	36	--
Barium	504	5,040	NA	100,000[i]	504	NA	5,000
Beryllium	1.4	14	NA	750[i]	1.4	NA	1.4
Cadmium	9.3	93	NA	500	5.08	9.3	9.3
Chromium	15.7	157	NA	5,000	15.7	10,300	1,030
Hexavalent Chromium	NA	NA	NA	5,000[i]	NA	50	50
Cobalt	20.8	208	NA	80,000[i]	20.8	NA	--
Copper	28	280	NA	4,000	28	2.4	28.04
Lead	14.4	144	NA	1,500	14.4	8.1	14.44
Manganese	8,140	81,400	NA	NA	8,140	NA	8,140
Mercury	0.6	6	NA	50	0.6	0.03	0.6
Nickel	96.5	965	NA	2,000	96.5	8.2	96.5
Silver	7.43	74.3	NA	600	7.43	0.92	7.43
Thallium	13	130	NA	7,000[i]	13	2,130	213
Zinc	81	810	NA	7,000	75.7	81	75.7

Notes:

a POC well trigger levels are based on the HGAL or the NAWQC, whichever is higher, unless otherwise noted (TtEMI, 1999). POC well trigger levels apply to POC wells, Post-Remedial action wells, and On- and Off-site Migration well IR07MW28A (TtEMI, 1999).

b Sentinel well trigger levels are 10 times the POC well trigger levels, unless otherwise noted (TtEMI, 1999). Sentinel well trigger levels apply to sentinel wells and on- and off-site migration well IR18MW21A (TtEMI, 1999).

c VOC well trigger levels are based on concentrations exceeding numerical criteria or exhibit a measured increase in the concentration of vinyl chloride, whichever occurs first.

d Utility Line well trigger levels are based on Southeast Water Pollution Control Plant discharge requirements (TtEMI, 1999).

Table 7 (Continued)
Comparison of Trigger Level Criteria for Ramp Wells
Seventeenth Quarterly Groundwater Sampling Report, Parcel B
Hunters Point Shipyard, San Francisco, California

e Concentrations are listed as reported in Table 5 of the final Parcel B RAMP (TtEMI, 1999), except for 1,2-dichloroethene, trichloroethene, chromium, and thallium. The NAWQCs listed in the 1999 RAMP for 1,2-dichloroethene, trichloroethene, chromium, and thallium were 1/10th the acute exposures; the NAWQCs listed in this table are the only NAWQCs applicable, those for acute exposure. The value listed for hexavalent chromium is from Table 10 of the final Parcel B ROD (TtEMI, 1997).

f Concentrations are listed as reported in Table 10 of the final Parcel B ROD (TtEMI, 1997).

g TPH is not a Comprehensive Environmental Response, Compensation, and Liability Act contaminant. A trigger level of 1,250 µg/L was included in the RAMP for screening purposes (TtEMI, 1999). The trigger level specified in the TPH Corrective Action Plan for Parcel B (TtEMI, 2001) is 1,400 µg/L at the shoreline, increasing to 20,000 µg/L at a distance of 250 feet inland.

h PCBs with applicable trigger levels include Aroclor-1016, Aroclor-1221, Aroclor-1232, Aroclor-1242, Aroclor-1248, Aroclor-1254, and Aroclor-1260. Note that if the lowest attainable laboratory quantitation limit (QL) is higher than the trigger level (as for the POC wells and one of the migration wells), the QL is used as the trigger level.

i Soluble Threshold Limit Concentration, *California Code of Regulations*, Title 22, Section 66261.24(a)(2)(A) (TtEMI, 1999).

j Great Lakes Water Quality Initiative Tier II level criterion for PCBs (TtEMI, 1999).

k POC and sentinel well trigger levels for 1,2-dichloroethene were reduced from 22,400 and 224,000 µg/L, respectively, as listed in the Parcel B RAMP (TtEMI, 1999), to a trigger level of 85 µg/L for both wells, since 1,2-dichloroethene criteria are based on human health.

l Human health-based criteria were developed for VOCs that may represent a human health risk to a future resident at Parcel B. Concentrations of these VOCs in groundwater correspond with an excess lifetime cancer risk of 10^{-6} and were selected as a groundwater remedial action objective for protection of human health based on groundwater-to-indoor-air modeling analysis (TtEMI, 1997).

m POC and sentinel well trigger levels for trichloroethene were reduced from 200 and 2,000 µg/L, respectively, as listed in the Parcel B RAMP (TtEMI, 1999), to a trigger level of 114 µg/L for both wells, since trichloroethene criteria are based on human health.

n NAWQC for trichloroethene is 1/10th acute exposures based on additional toxicity information for aquatic life (TtEMI, 1999).

o The sentinel well trigger level for vinyl chloride was reduced from 550 µg/L, as listed in the Parcel B RAMP (TtEMI, 1999), to 55 µg/L, since the vinyl chloride criterion is based on human health.

p Because no NAWQC have been specified for vinyl chloride, a concentration of 55 µg/L was used based on the human health risk assessment for VOCs (TtEMI, 1999).

--	Concentration not listed in original table	PAH	Polynuclear aromatic hydrocarbon	TtEMI	Tetra Tech EM Inc.
µg/L	Microgram per liter	PCB	Polychlorinated biphenyl	TPH-d	Total petroleum hydrocarbons as diesel
HGAL	Hunters Point groundwater ambient level	POC	Point-of-compliance	TPH-g	Total petroleum hydrocarbons as gasoline
NA	Not applicable	RAMP	Remedial action monitoring plan	VOC	Volatile organic compound
NAWQC	National Ambient Water Quality Criteria	ROD	Record of decision		

3.3.1 POC Monitoring Wells

Five POC wells and two POC/VOC wells, including VOC compliance, were sampled during Q17. Two metals, beryllium and thallium, reported concentrations that exceeded the POC trigger levels of 1.4 micrograms per liter (µg/L) and 13.0 µg/L, respectively. The following wells reported concentrations of analytes that exceeded the POC trigger levels during Q17:

- Well IR10MW31A1 – beryllium (1.5 µg/L) and thallium (85.2 µg/L);
- Well IR07MW19A– beryllium (3.3 µg/L) and thallium (183 µg/L); and
- Well IR07MWS-2– beryllium (3.0 µg/L) and thallium (158 µg/L).

3.3.2 Sentinel Monitoring Wells

Four Sentinel wells and three Sentinel/VOC wells were sampled for low-level VOCs during Q17. Sentinel wells are sampled biannually for VOCs, metals, hexavalent chromium, TPH as gasoline, and TPH as diesel. Sentinel/VOC wells are sampled biannually for metals, hexavalent chromium, TPH as gasoline, and TPH as diesel, and quarterly for low-level VOCs. Analytical results for well IR10MW28A (Sentinel/VOC) indicated total chromium (trigger level 157 µg/L) and lead (trigger level 144 µg/L) above the trigger levels at concentrations of 435 µg/L and 246 µg/L, respectively, during the Q17.

3.3.3 Post-Remedial Action Monitoring Wells

During Q17, five Post-Remedial action wells were sampled, which included four of the wells installed during Q17. Two metals, beryllium and total chromium, exceeded POC trigger levels of 1.4 µg/L and 157 µg/L, respectively, in well IR07MW20A1 with concentrations of 3.9 µg/L and 19.1 µg/L, respectively.

3.3.4 Hexavalent Chromium Monitoring Well

One Hexavalent Chromium well (IR10MW12A) was sampled during Q17. According to previous reports, hexavalent chromium has historically been reported at concentrations above the aquatic criterion (50 µg/L) in this monitoring well. During Q17, hexavalent chromium was detected in well IR10MW12A at a concentration of 550 µg/L.

3.3.5 VOC Monitoring Wells

During Q17, five VOC wells were sampled for low-level VOCs. Trichloroethene (TCE) and cis-1, 2-dichloroethene (DCE) did not exceed the VOC trigger levels in any of the five wells sampled.

Although detected in some of these wells during previous quarters, vinyl chloride was not detected in the five VOC wells during Q17. Table 8 lists the historical detections of these VOCs in groundwater near IR-10.

3.3.6 On- and Off-Site Migration Monitoring Wells

During Q17, two On- and Off-site Migration wells, IR07MW28A and IR18MW21A, were sampled. No trigger levels were exceeded.

3.3.7 Utility Line Monitoring Well

One Utility Line well (IR06MW42A) was sampled during Q17. No trigger levels were exceeded.

3.3.8 Supplemental Characterization Wells

During Q17, three Supplemental Characterization wells, (IR26MW46A, IR26MW47A, and IR26MW48A) and six ZVI wells (IR10MW61A, 62A, 71A, 76A, 79A and 80A) were sampled. The ZVI well groundwater samples were analyzed for VOCs by EPA 8260B only. Results from these wells were compared to the levels in Table 5, which list the groundwater trigger levels proposed for these wells. Note that by necessity, for certain compounds, the trigger level becomes the lowest attainable laboratory quantitation limit, as described in the footnotes to Table 5. During Q17, the proposed trigger level for mercury (0.6 µg/L) was exceeded in well IR26MW47A with a reported concentration of 1.4 µg/L.

No other proposed trigger levels were exceeded in the Supplemental Characterization wells during Q17. However, TCE was present at 650 µg/L at IR10MW71A. This concentration exceeds TCE trigger levels designated for all other RAMP well types (Table 7).

This page left blank intentionally

Table 8
Historical Results for TCE, DCE, and Vinyl Chloride at Monitoring Wells
In and Near the VOC Groundwater Plume in IR-10[a]
Seventeenth Quarterly Groundwater Sampling Report, Parcel B
Hunters Point Shipyard, San Francisco, California

	RI	RI	RI	RI	RI	RI	RI	RI	Q1	Q2	Q3	Q4	Q5	Q6	Q7	Q8	Q9	Q10	Q11	Q12	Q13	Q14	Q15	Q16	Q17
IR10MW12A																									
Sampling Date	3/9/89	8/21/90	7/12/91	1/15/92	11/9/93	2/17/94	5/12/94	8/30/94	NS	NS	NS	NS	10/11/00	1/18/01	4/25/01	7/19/01	03/13/02	05/30/02	08/29/02	11/02/02	03/12/03	5/22/03	8/20/03	11/11/03	3/23/04
1,2-DCE (total)	5 ND	0.5 ND	0.5 ND	5 ND	NA	NA	NA	NA					NA	NA	NA	NA	NA	NA	NA	2 ND	NA	NA	NA	NA	NA
cis-1,2-DCE	NA	NA	NA	NA	1 ND	1 ND	0.5 ND	0.5 ND					0.5 ND	0.5 ND	0.5 ND	0.5 ND	0.5 ND	0.5 ND	0.5 ND	NA	0.5 ND	0.5 ND	0.5 ND	0.5 ND	0.5 ND
trans-1,2-DCE	NA	NA	NA	NA	1 ND	1 ND	0.5 ND	0.5 ND					0.5 ND	0.5 ND	0.5 ND	0.5 ND	0.5 ND	0.5 ND	0.5 ND	NA	0.5 ND	0.3 ND	0.3 ND	0.3 ND	0.5 ND
TCE	5 ND	0.5 ND	0.5 ND	5 ND	1 ND	1 ND	0.5 ND	0.5 ND					0.5 ND	0.5 ND	0.5 ND	0.5 ND	0.5 ND	0.5 ND	0.5 ND	2 ND	0.5 ND	0.5 ND	0.5 ND	0.3 J	0.5 ND
Vinyl Chloride	10 ND	1 ND	1 ND	10 ND	1 ND	1 ND	0.5 ND	0.5 ND					0.5 ND	0.5 ND	0.5 ND	0.5 ND	0.5 ND	0.5 ND	0.5 ND	0.5 ND	0.5 ND	0.5 ND	0.5 ND	0.5 ND	0.5 ND
IR10MW13A1																									
Sampling Date	3/9/89	8/22/90	7/12/91	1/13/92	11/9/93	2/17/94	5/12/94	8/31/94	NS	NS	NS	NS	10/13/00	1/18/01	4/25/01	7/18/01	03/13/02	05/31/02	08/29/02	11/12/02	03/6/03	5/21/03	8/18/03	11/11/03	3/22/04
1,2-DCE (total)	66	27	19	11	NA	NA	NA	NA					NA	NA	13.7	NA	NA	NA	NA	6	NA	NA	NA	NA	NA
cis-1,2-DCE	NA	NA	NA	NA	9	8	10	15					9	8	13	11	5	6	4	NA	0.5 ND	10	13	14	13
trans-1,2-DCE	NA	NA	NA	NA	1	0.6	0.8	1					0.6	0.6	0.7	0.8	0.5 ND	0.4	0.3	NA	0.5 ND	0.8	0.9	1	1.1
TCE	31	13	0.5 ND	9	10	8	8	8					8	5	10	9	6	7	6	8	0.5 ND	8	9	8	7.6
Vinyl Chloride	3	1 ND	1 ND	10 ND	1 ND	1 ND	0.5 ND	0.5 ND					0.5	0.5 ND	0.5 ND	0.5 ND	0.5 ND	0.5 ND	0.5 ND	0.5 ND	0.5 ND	0.5 ND	0.5 ND	0.5 ND	0.5 ND
IR10MW14A																									
Sampling Date	3/9/89	8/22/90	7/12/91	1/13/92	11/9/93	2/17/94	5/12/94	8/31/94	NS	NS	NS	NS	10/13/00	NS	4/25/01	7/19/01	03/14/02	05/31/02	08/29/02	11/12/02	03/5/03	5/21/03	8/14/03	11/6/03	3/22/04
1,2-DCE (total)	5 ND	0.5 ND	4	5 ND	NA	NA	NA	NA					NA		NA	NA	NA	NA	NA	2 ND	NA	NA	NA	NA	NA
cis-1,2-DCE	NA	NA	NA	NA	1	1 ND	0.5 ND	0.5 ND					0.3		0.5 ND	0.5 ND	0.5 ND	0.5 ND	0.5 ND	NA	0.5 ND	0.5 ND	0.5 ND	0.5 ND	0.5 ND
trans-1,2-DCE	NA	NA	NA	NA	2	1	0.5 ND	0.5 ND					0.4		0.5 ND	0.5 ND	0.5 ND	0.5 ND	0.5 ND	NA	0.3 ND	0.5 ND	0.5 ND	0.3 ND	0.5 ND
TCE	5 ND	0.6	4	2	4	2	0.5 ND	0.5 ND					2		0.7	0.4	0.5 ND	0.3	0.5	0.3	0.5 ND	0.3 J	0.5 ND	0.5 ND	0.5 ND
Vinyl Chloride	10 ND	1 ND	1 ND	10 ND	1 ND	1 ND	0.5 ND	0.5 ND					0.5 ND		0.5 ND	0.5 ND	0.5 ND	0.5 ND	0.5 ND	0.5 ND	0.5 ND	0.5 ND	0.5 ND	0.5 ND	0.5 ND
IR10MW28A																									
Sampling Date	10/31/91	1/13/92	11/9/93	2/22/94	5/16/94	8/22/94	NS	NS	9/3/99	1/12/00	NS	NS	10/11/00	1/18/01	4/26/01	07/19/01	03/14/02	06/04/02	09/04/02	11/12/02	03/11/03	5/22/03	8/19/03	11/11/03	3/25/04
1,2-DCE (total)	5 ND	5 ND	NA	NA	NA	NA			NA	NA			NA	NA	0.6	NA	NA	NA	NA	0.4	NA	NA	NA	NA	0.5 ND
cis-1,2-DCE	NA	NA	1 ND	2 ND	1 ND	1 ND			3 ND	0.6			3 ND	1 ND	0.6	0.4	0.5	0.4	0.4	NA	0.5 ND	0.5 ND	0.4 J	0.4 J	0.5 ND
trans-1,2-DCE	NA	NA	1 ND	2 ND	1 ND	1 ND			3 ND	2 ND			3 ND	1 ND	0.5 ND	0.5 ND	0.5 ND	0.5 ND	0.5 ND	NA	0.3 ND	0.3 ND	0.3 ND	0.3 ND	0.5 ND
TCE	38	28	27	30	42	45			54	40			40	32	25	17	19	21	17	11	6	20	15	12	0.5 ND
Vinyl Chloride	10 ND	10 ND	1 ND	2 ND	1 ND	1 ND			2 ND	1 ND			3 ND	1 ND	0.5 ND	0.5 ND	0.5 ND	0.5 ND	0.5 ND	0.5 ND	0.5 ND	0.5 ND	0.5 ND	0.5 ND	0.5 ND
IR10MW31A1																									
Sampling Date	12/23/93	8/11/94	5/23/95	NS	NS	NS	NS	NS	9/3/99	1/12/00	4/28/00	7/10/00	10/16/00	1/17/01	4/20/01	7/19/01	03/14/02	06/14/02	08/29/02	11/19/02	03/6/03	5/21/03	8/14/03	11/5/03	3/22/04
1,2-DCE (total)	10 ND	10 ND	10 ND						NA	NA	NA	NA	NA	NA	NA	NA	NA	NA	NA	2 ND	NA	NA	NA	NA	0.5 ND
cis-1,2-DCE	NA	NA	NA						1 ND	1 ND	1 ND	1 ND	0.5 ND	0.5 ND	0.5 ND	0.5 ND	0.5 ND	0.5 ND	0.5 ND	NA	0.5 ND	0.5 ND	0.5 ND	0.5 ND	0.5 ND
trans-1,2-DCE	NA	NA	NA						1 ND	1 ND	1 ND	1 ND	0.5 ND	0.5 ND	0.5 ND	0.5 ND	0.5 ND	0.5 ND	0.5 ND	NA	0.3 ND	0.5 ND	0.5 ND	0.3 ND	0.5 ND
TCE	10 ND	10 ND	10 ND						1 ND	1 ND	1 ND	1 ND	0.5 ND	0.5 ND	0.5 ND	0.5 ND	0.5 ND	0.5 ND	0.5 ND	2 ND	0.5 ND	0.5 ND	0.5 ND	0.5 ND	0.5 ND
Vinyl Chloride	10 ND	10 ND	10 ND						0.5 ND	0.5 ND	0.5 ND	0.5 ND	0.5 ND	0.5 ND	0.5 ND	0.5 ND	0.5 ND	0.5 ND	0.5 ND	0.5 ND	0.5 ND	0.5 ND	0.5 ND	0.5 ND	0.5 ND

Table 8 (Continued)
Historical Results for TCE, DCE, and Vinyl Chloride at Monitoring Wells
In and Near the VOC Groundwater Plume in IR-10[a]
Seventeenth Quarterly Groundwater Sampling Report, Parcel B
Hunters Point Shipyard, San Francisco, California

	RI	RI	RI	RI	RI	RI	RI	RI	Q1	Q2	Q3	Q4	Q5	Q6	Q7	Q8	Q9	Q10	Q11	Q12	Q13	Q14	Q15	Q16	Q17
IR10MW33A[b]																									
Sampling Date	NS	NS	NS	NS	NS	NS	NS	NS	9/3/99	1/12/00	4/27/00	7/10/00	10/13/00	1/19/01	4/25/01	7/19/01	03/21/02	05/30/02	08/29/02	11/14/02	03/6/03	5/22/03	8/18/03	11/11/03	3/30/04
1,2-DCE (total)									NA	NA	NA	NA	NA	NA	NA	NA	NA	NA	NA	2	NA	NA	NA	NA	NA
cis-1,2-DCE									10	13	12	13	14	10	11	14	9	6	3	NA	5	7	7	6	13
trans-1,2-DCE									1 ND	0.3	1 ND	1 ND	0.6	0.5 ND	0.5 ND	1 ND	0.5 ND	0.5 ND	0.5 ND	NA	0.3 ND	0.3 ND	0.3 ND	0.3 ND	6.8
TCE									19	23	25	25	18	13	22	25	23	17	10	16	18	22	23	13	5.1
Vinyl Chloride									0.5 ND	0.5 ND	0.5 ND	0.5 ND	0.5 ND	0.5 ND	0.5 ND	1 ND	0.5 ND	0.5 ND	0.5 ND	0.5 ND	0.5 ND	0.5 ND	0.5 ND	0.5 ND	0.5 ND
IR10MW59A[c]																									
Sampling Date	--	--	--	--	--	--	--	--	--	--	--	--	--	--	4/25/01	7/23/01	03/18/02	05/31/02	09/03/02	11/13/02	03/6/03	5/22/03	8/19/03	11/11/03	NS
1,2-DCE (total)															NA	NA	NA	NA	NA	3	NA	NA	NA	NA	
cis-1,2-DCE															4.0	2	2	3	4	NA	4	3	3	3 J	
trans-1,2-DCE															0.5 ND	0.5 ND	5 ND	0.5 ND	0.5 ND	NA	0.3 ND	0.3 ND	0.3 ND	0.3 ND	
TCE															340	210	240	240	330	410	350	270	300	180	
Vinyl Chloride															0.5 ND	0.5 ND	5 ND	0.5 ND	0.5 ND	0.5 ND	0.5 ND	0.5 ND	0.5 ND	5 ND	
IR10MW74A[d]																									
Sampling Date	--	--	--	--	--	--	--	--	--	--	--	--	--	--	--	--	--	--	--	--	--	--	--	--	3/30/04
1,2-DCE (total)																									NA
cis-1,2-DCE																									0.5 ND
trans-1,2-DCE																									0.5 ND
TCE																									1.9
Vinyl Chloride																									0.5 ND
IR25MW37A[e]																									
Sampling Date	--	--	--	--	--	--	--	--	--	--	--	--	--	01/19/01	4/27/01	7/23/01	03/18/02	05/31/02	08/29/02	11/14/02	03/5/03	5/21/03	8/18/03	11/10/04	3/30/04
1,2-DCE (total)														NA	NA	NA	NA	NA	NA	2 ND	NA	NA	NA	NA	NA
cis-1,2-DCE														0.5 ND	0.4 J	0.7 J	0.5 ND	0.4	0.5 ND	NA	7	0.3 J	0.3 J	0.4 J	0.5 ND
trans-1,2-DCE														0.5 ND	0.5 ND	0.5 ND	0.5 ND	0.5 ND	0.5 ND	NA	0.5	0.5 ND	0.5 ND	0.3 ND	0.5 ND
TCE														0.5 ND	0.3 J	0.3 J	0.5 ND	0.4	0.4	2 ND	7	0.3 J	0.5 ND	0.3 J	0.5 ND
Vinyl Chloride														0.5 ND	0.5 ND	0.5 ND	0.5 ND	0.5 ND	0.5 ND	0.5 ND	0.5 ND	0.5 ND	0.5 ND	0.5 ND	0.5 ND
PA50MW01A																									
Sampling Date	3/16/93	8/17/94	6/14/95	NS	NS	NS	NS	NS	9/1/99	1/13/00	4/28/00	7/10/00	10/12/00	1/17/01	5/1/01	7/20/01	03/18/02	06/04/02	09/03/02	11/18/02	03/5/03	5/21/03	8/14/03	11/5/03	3/29/04
1,2-DCE (total)	10 ND	10 ND	10 ND						10 ND	NA	NA	NA	NA	NA	NA	NA	NA	NA	NA	2 ND	NA	NA	NA	NA	NA
cis-1,2-DCE	NA	NA	NA						NA	1 ND	1 ND	1 ND	0.5 ND	0.5 ND	0.5 ND	0.5 ND	0.5 ND	0.5 ND	0.5 ND	NA	0.5 ND	0.5 ND	0.5 ND	0.5 ND	0.2
trans-1,2-DCE	NA	NA	NA						NA	1 ND	1 ND	1 ND	0.5 ND	0.5 ND	0.5 ND	0.5 ND	0.5 ND	0.5 ND	0.5 ND	NA	0.5 ND	0.5 ND	0.5 ND	0.3 ND	0.5 ND
TCE	10 ND	10 ND	10 ND						10 ND	1 ND	1 ND	1 ND	0.5 ND	0.5 ND	0.5 ND	0.5 ND	0.5 ND	0.5 ND	0.5 ND	2 ND	0.5 ND	0.5 ND	0.5 ND	0.5 ND	0.5 ND
Vinyl Chloride	10 ND	10 ND	10 ND						10 ND	0.5 ND	0.5 ND	0.5 ND	0.5 ND	0.5 ND	0.5 ND	0.5 ND	0.5 ND	0.5 ND	0.5 ND	0.5 ND	0.5 ND	0.5 ND	0.5 ND	0.5 ND	0.5 ND
IR10MW71A[f]																									
Sampling Date	--	--	--	--	--	--	--	--	--	--	--	--	--	--	--	--	--	--	--	--	--	--	--	--	3/26/04
TCE																									650

Table 8 (Continued)
Historical Results for TCE, DCE, and Vinyl Chloride at Monitoring Wells In and Near the VOC Groundwater Plume in IR-10[a]
Seventeenth Quarterly Groundwater Sampling Report, Parcel B
Hunters Point Shipyard, San Francisco, California

Notes:

a All concentrations reported in micrograms per liter.
b Monitoring well installed in 1999; therefore, historical data are not available.
c Monitoring well installed in 2001; therefore, historical data are not available.
d Monitoring well installed in 2003. During Q17 monitoring well IR10MW74A was inadvertently sampled instead of IR10MW59A.
f Historical results for Supplemental Characterization Well IR10MW71A (installed in August 2003) are not part of the sampling quarters in table. These additional TCE results are presented below:
610 µg/L (pre-injection, Sept. 2003)
1,200 µg/L (post injection, Oct. 2003)
810 µg/L (Nov. 2003)
860 µg/L (Jan. 2004)

Acronyms/Abbreviations:

-- Prior to well installation
DCE dichloroethene
IR Installation Restoration
µg/L micrograms per liter
NA not analyzed
NS not sampled
IR Remedial Investigation
TCE trichloroethene
VOC volatile organic compound
ZVI zero valent ion

Laboratory Qualifiers/Validation Codes:

J laboratory estimated concentration (below practical quantitation limit
U indicates the compound or analyte was analyzed for, but was not detected above the stated detection limit.

3.4 DATA QUALITY

Field and laboratory personnel implemented standard quality assurance and quality control (QA/QC) techniques to provide a method for evaluating the quality of data collected during this sampling event. Field QA/QC consisted of collecting field duplicate pairs, equipment rinsate blanks, trip blanks, and matrix spike/matrix spike duplicates (MS/MSD) in accordance with the Draft SAP (TtEMI, 2003). Field duplicate samples were collected for groundwater samples only. Six field duplicate pairs were collected for the 37 wells sampled, meeting the minimum duplicate sampling frequency of 10 percent specified in the Draft SAP (TtEMI, 2003). Field duplicate results for monitoring wells IR07MW19A, IR07MW20A1, IR10MW80A, IR26MW41A, IR26MW46A and IR26MW47A were screened against the trigger levels and are included in Appendix A. Five equipment rinsates were collected during drilling activities conducted during Q17. A total of fifteen equipment rinsate blanks were collected from the three field sampling teams during the 5-day groundwater-sampling event, which met the minimum equipment rinsate frequency of one per field team per sampling equipment per day. Laboratory-prepared trip blanks containing analyte-free water were included in each of the coolers that contained groundwater samples for VOC analyses, EPA CLP and 8260B. Additional sample volumes were collected for MS/MSD sample pairs to meet the requirements of the Draft SAP (TtEMI, 2003).

Appendix E presents the relative percent differences (RPD) for field duplicate pair results. The RPD for several metals in the field duplicate sample collected from monitoring well IR07MW19A exceeded the suggested guideline of less than 30 RPD for water samples. The high RPD indicates that concentrations of metals near the reporting limit should be interpreted as having a higher degree of uncertainty. Additionally, several analytes were reported in one of the samples near the reporting limit while the associated duplicate sample reported concentrations below the detection limit. A high RPD is expected when the concentration of this analyte is near the reporting limit, and does not indicate a systematic precision problem.

The data validation company Laboratory Data Consultants, Inc. (LDC) validated the data in accordance with procedures presented in the following documents:

- "USEPA CLP National Functional Guidelines for Organic Data Review" (EPA, 1999);
- "USEPA CLP National Functional Guidelines for Inorganic Data Review" (EPA, 1994); and
- Draft Sampling and Analysis Plan, Basewide Groundwater Monitoring Program, Hunters Point Shipyard, San Francisco, California, Draft, December. (TtEMI, 2003).

Appendix D presents all the LDC validation reports placed on a compact disc. The reports evaluated QA/QC criteria associated with the data, including the following parameters:

- Sample collection, holding times, and blank sample analytical results to assess sample contamination and representativeness;
- Sample duplicate and MS/MSD results to assess precision; and
- Surrogate spike, laboratory control sample, and MS/MSD results to assess accuracy.

A total of 4,950 individual analytical results was generated for primary samples (3,134 groundwater analytes and 1,816 soil analytes) and groundwater field duplicates. As a result of the validation, 262 of these results were qualified as estimated because of analytical discrepancies. Of the 4,950 analytical results, a total of 46 were rejected for the following reasons:

- Thirteen results for 1,2-dibromo-3-chloropropane (DBCP) and three results for bromomethane were rejected due to initial calibration relative retention factors below the acceptance limit of ≥0.05, which indicated poor instrument sensitivity for this analyte;
- Fifteen results for arsenic and one selenium result were rejected due to MS recoveries below the acceptance criteria of 30%, which may indicate that low-biased detects and false nondetects may have been reported; and
- Fourteen SVOCs (all acid compounds) non-detect results in one sample (Sample No. 0414M016) were rejected due to low surrogate recoveries; however, the sample was re-extracted with all CLP analytes considered usable.

Results that are qualified as estimated are considered usable. The overall assessment is that 99% of the results are usable. Qualifiers were applied in accordance with the definitions and notations previously used for this groundwater monitoring project.

3.5 DEVIATIONS FROM THE DRAFT SAP

The Navy conducted the Q17 sampling event in accordance with procedures specified in the Draft SAP (TtEMI, 2003) with the following exceptions:

- New wells added to the groundwater sampling event (i.e., IR07MW21A1 and IR07MW24A) were analyzed using SW-846 methodology not CLP methodology; and
- Immiscible layers were not measured during Q17 due to oversight during field activities.

4.0 CONCLUSIONS

The RAMP Q17 groundwater sampling event took place in March 2004. Groundwater trigger levels were exceeded in samples from the following RAMP wells:

- Well IR07MW19A – beryllium (3.3 micrograms per liter [µg/L]) and thallium (183 µg/L);
- Well IR07MWS-2 – beryllium (3.0 µg/L) and thallium (158 µg/L);
- Well IR10MW28A – chromium (435 µg/L) and lead (246 µg/L);
- Well IR07MW20A1 – beryllium (3.9 µg/L) and chromium (19.1 µg/L);
- Well IR10MW12A – hexavalent chromium (550 µg/L);
- Well IR10MW31A1 – beryllium (1.5 µg/L) and thallium (85.2 µg/L); and
- Well IR26MW47A – mercury (1.4 µg/L).

The Navy will evaluate concentration trends in Parcel B groundwater in the annual report for Year 5.

Groundwater movement in Parcel B continues to be towards the north and northeast, which is consistent with previous interpretations of groundwater movement beneath this parcel.

Groundwater elevations are generally consistent with previous interpretations; however, some changes have been noted in areas of water-line repair. Further assessment will occur throughout the year.

TCE plume movement appears consistent with previous interpretations (Figure 4), as do the reported concentrations within Parcel B.

This page left blank intentionally

5.0 REFERENCES

Kleinfelder, Inc. 2004. Chemical Data Acquisition Plan, Basewide Groundwater Monitoring Program, Hunters Point Shipyard, San Francisco, California, March.

PRC Environmental Management, Inc. 1996. "Draft Final Parcel B Remedial Investigation, HPS, San Francisco, California." June 3.

Tetra Tech EM, Inc. (TtEMI). 1997. "Final Record of Decision, Parcel B, HPS, San Francisco, California." October 9.

TtEMI. 1999. "Final Remedial Action Monitoring Plan [RAMP], Parcel B, HPS, San Francisco, California." July 2.

TtEMI. 2000a. "Draft Field Sampling Plan for Parcel B RAMP, HPS, San Francisco, California." April 10.

TtEMI. 2000b. "Draft Quality Assurance Project Plan for Parcel B RAMP, HPS, San Francisco, California." April 24.

TtEMI. 2001. " Draft Technical Memorandum, Parcel B Groundwater Evaluation, HPS, San Francisco, California." November 30.

TtEMI. 2002. "Parcel B Remedial Design Document V, RAMP, HPS, San Francisco, California." Revision 3. January 8.

TtEMI. 2003. "Sampling and Analysis Plan, Field Sampling Plan and Quality Assurance Project Plan, Basewide Groundwater Monitoring Program, HPS, San Francisco, California." Internal Draft Revision, November 17.

TtEMI. 2003. "Sampling and Analysis Plan, Field Sampling Plan and Quality Assurance Project Plan, Basewide Groundwater Monitoring Program, HPS, San Francisco, California." Draft Revision, December 18.

U.S. Environmental Protection Agency (EPA). 1994. "USEPA CLP National Functional Guidelines for Inorganic Data Review." Office of Emergency and Remedial Response. Washington, DC. February.

EPA. 1999. "USEPA CLP National Functional Guidelines for Organic Data Review." Office of Emergency and Remedial Response. Washington, DC. October.

This page left blank intentionally

FIGURES

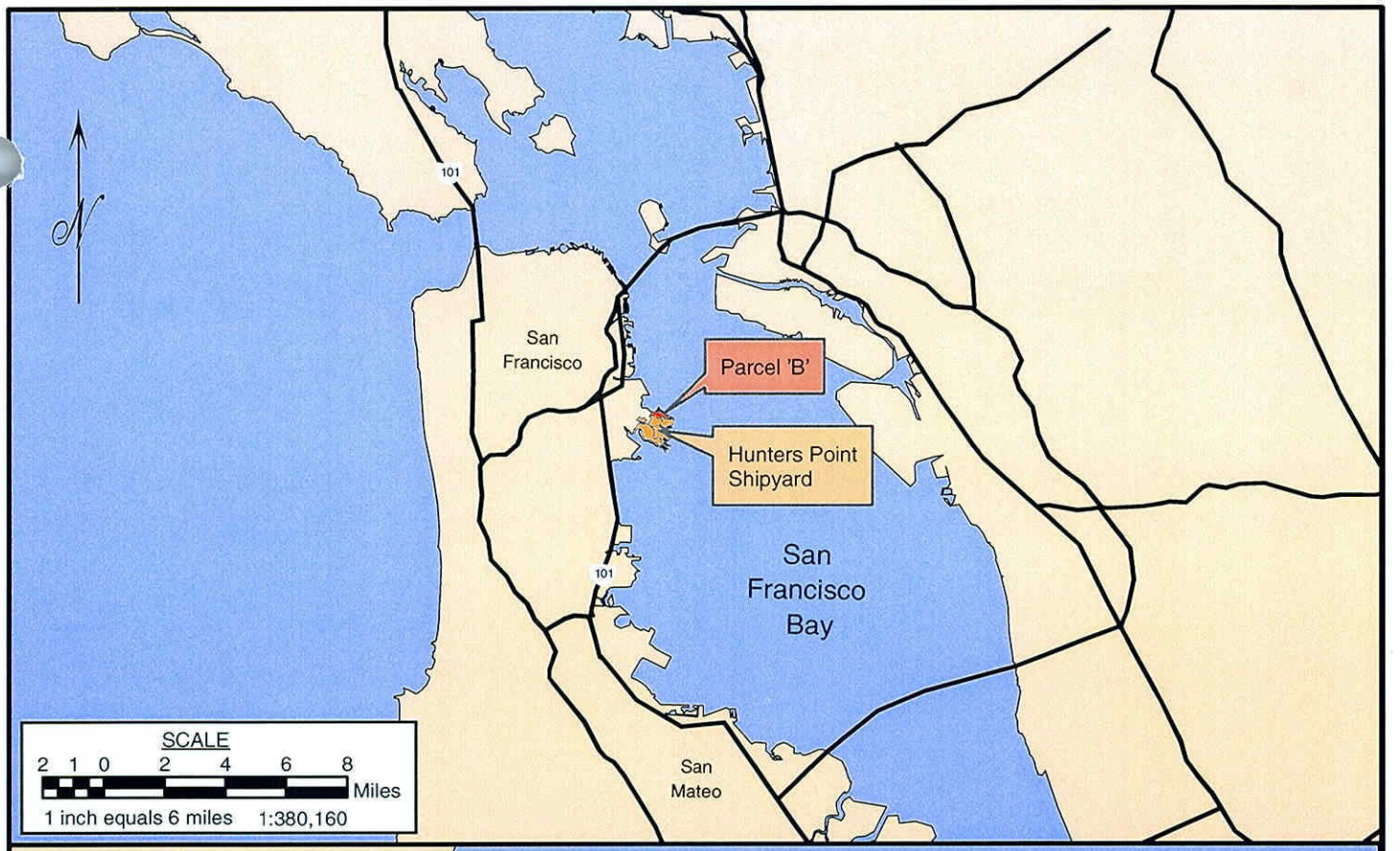

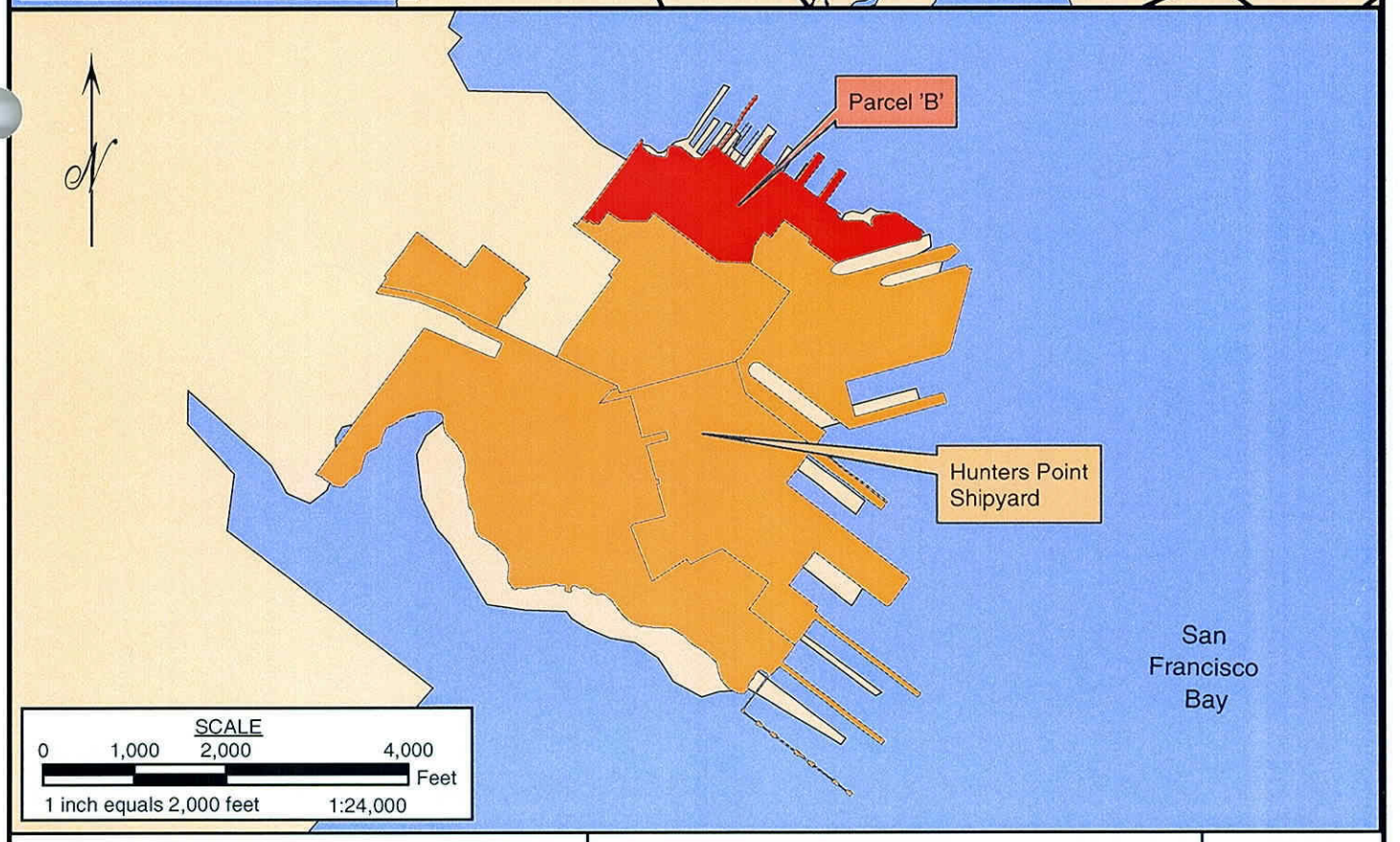

KLEINFELDER

Graphic By: D. Anderson
Date: 11/04/03

Project No: 41330
File Name:

SITE LOCATION MAP

HUNTERS POINT SHIPYARD
SAN FRANCISCO, CALIFORNIA

FIGURE

1

Copyright Kleinfelder, Inc. 2004

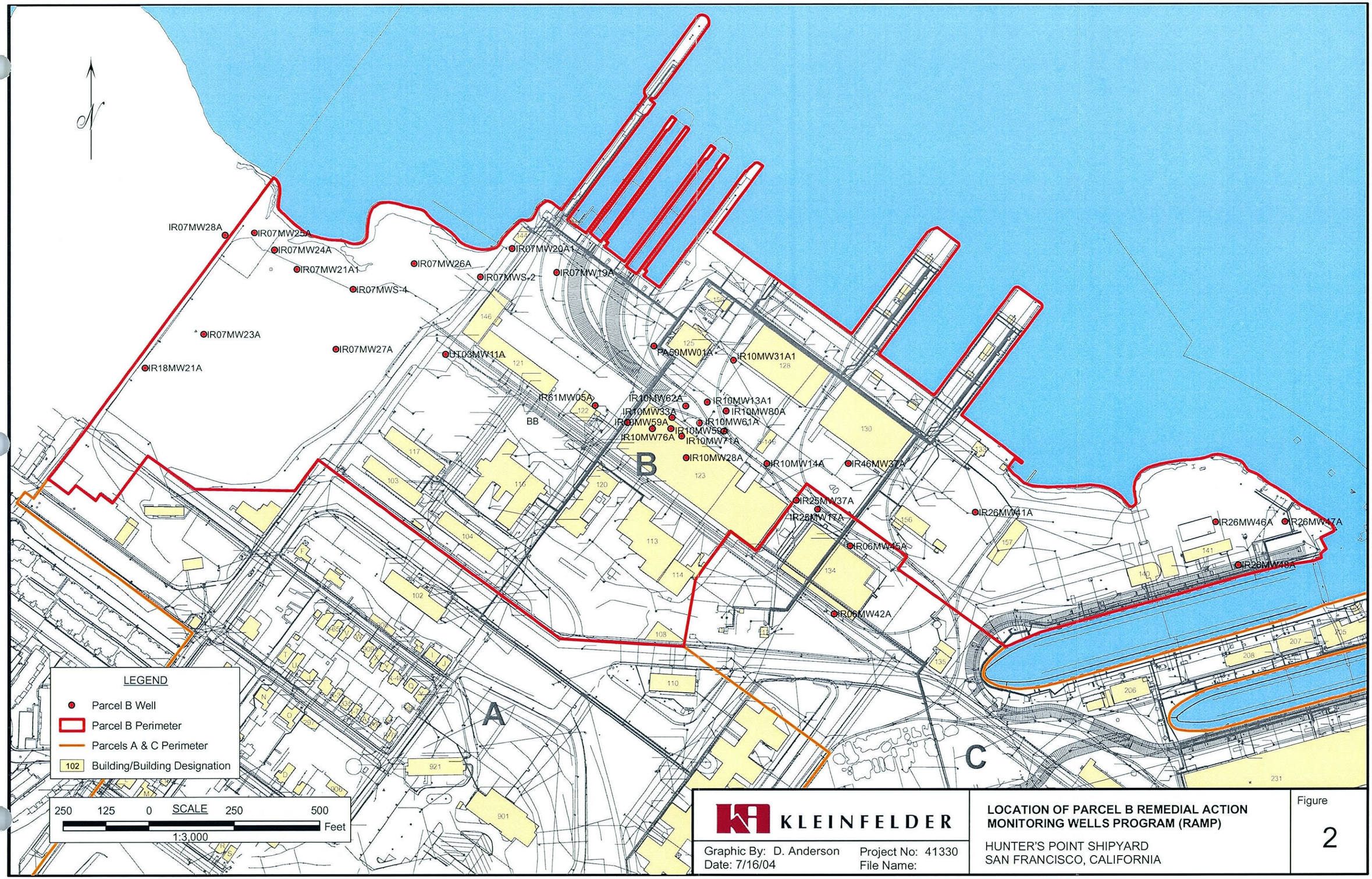

KLEINFELDER

Graphic By: D. Anderson
Date: 7/16/04

Project No: 41330
File Name:

LOCATION OF PARCEL B REMEDIAL ACTION MONITORING WELLS PROGRAM (RAMP)

HUNTER'S POINT SHIPYARD
SAN FRANCISCO, CALIFORNIA

Figure
2

Copyright Kleinfelder, Inc. 2004

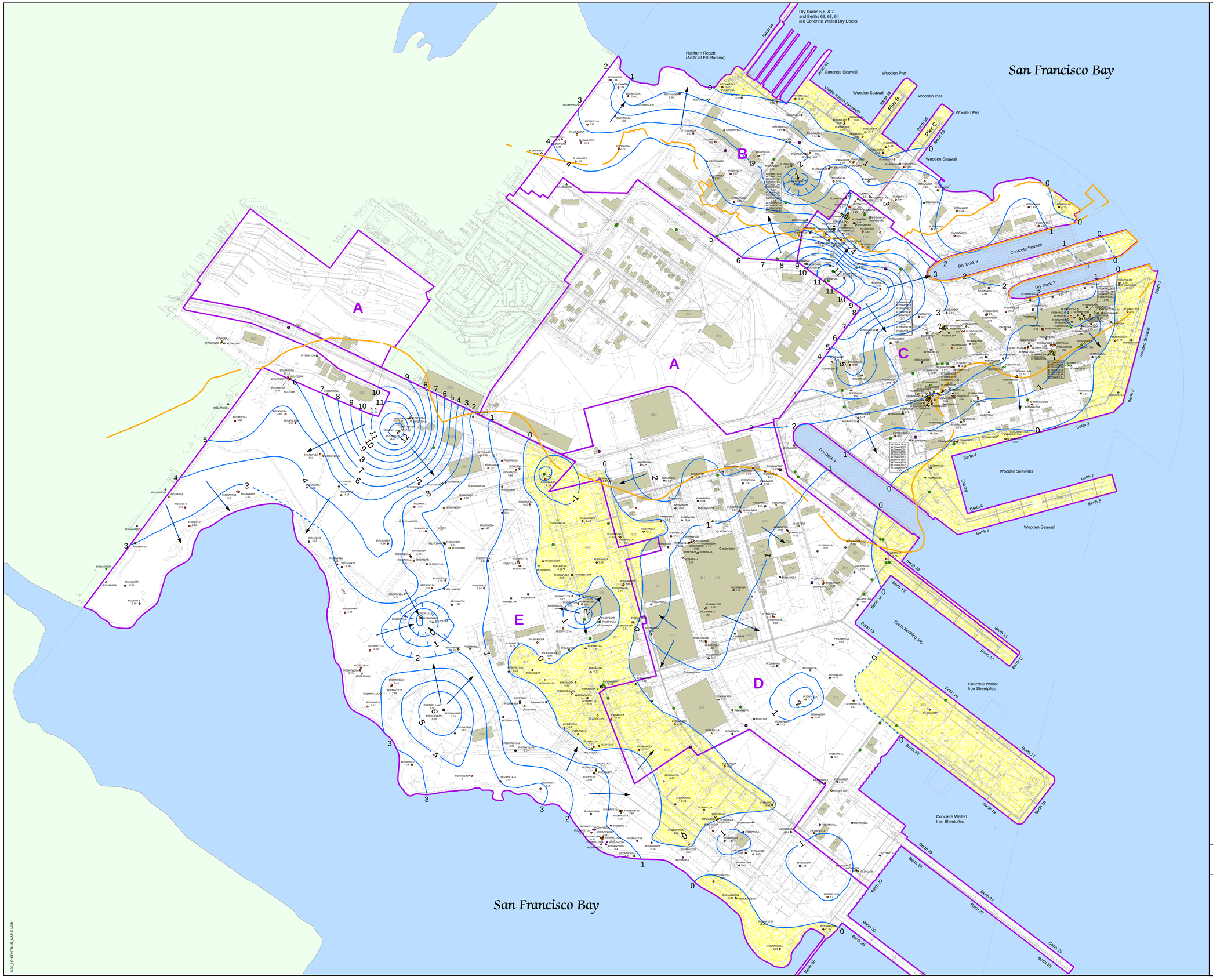

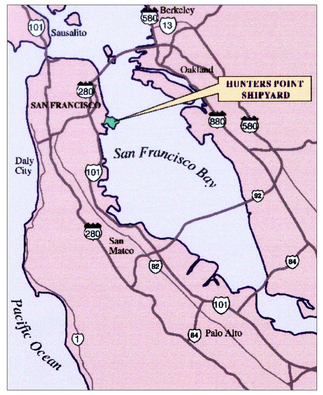

Location Map

N
W E
S

Explanation

A-Aquifer Monitoring Well with Well Designation and Groundwater Level Elevation [feet above msl];
* Indicates Elevation Value Not Used For Contours

Type

- Sampled
- No Access, No Sample
- Not Found, Not Sampled
- Not In SAP
- Sanitary Sewer Plug (Conducted by Caretaker Site Office)
- Fresh Water Line Repair (Conducted by Caretaker Site Office)
- 1935 Shoreline
- Water Line Removed (Conducted by Caretaker Site Office)
- A-Aquifer Groundwater Elevation Contour Line, 3/26/04 (1-foot intervals, dashed where inferred)
- A-Aquifer Groundwater Flow Direction
- Groundwater Elevation Below Sea Level
- San Francisco Bay
- 211 Building/Building Designation
- B Parcel Boundary/Parcel Designation
- Dry Dock (No groundwater flow in this area)
- Non-Navy Property

Notes:

Water levels where measured during an apogean and neep tides on March 26, 2004.

msl: Mean Sea Level

0 100 200 400 600 800 1,000
Scale In Feet

KLEINFELDER

Hunters Point Shipyard, San Francisco, California
U.S. Navy Southwest Division, NAVFAC, San Diego

FIGURE 3
A-AQUIFER
GROUNDWATER CONTOUR MAP
SEVENTEENTH QUARTER
MARCH 26, 2004

6-SD_HP-CONTOUR_MAP-E.MXD

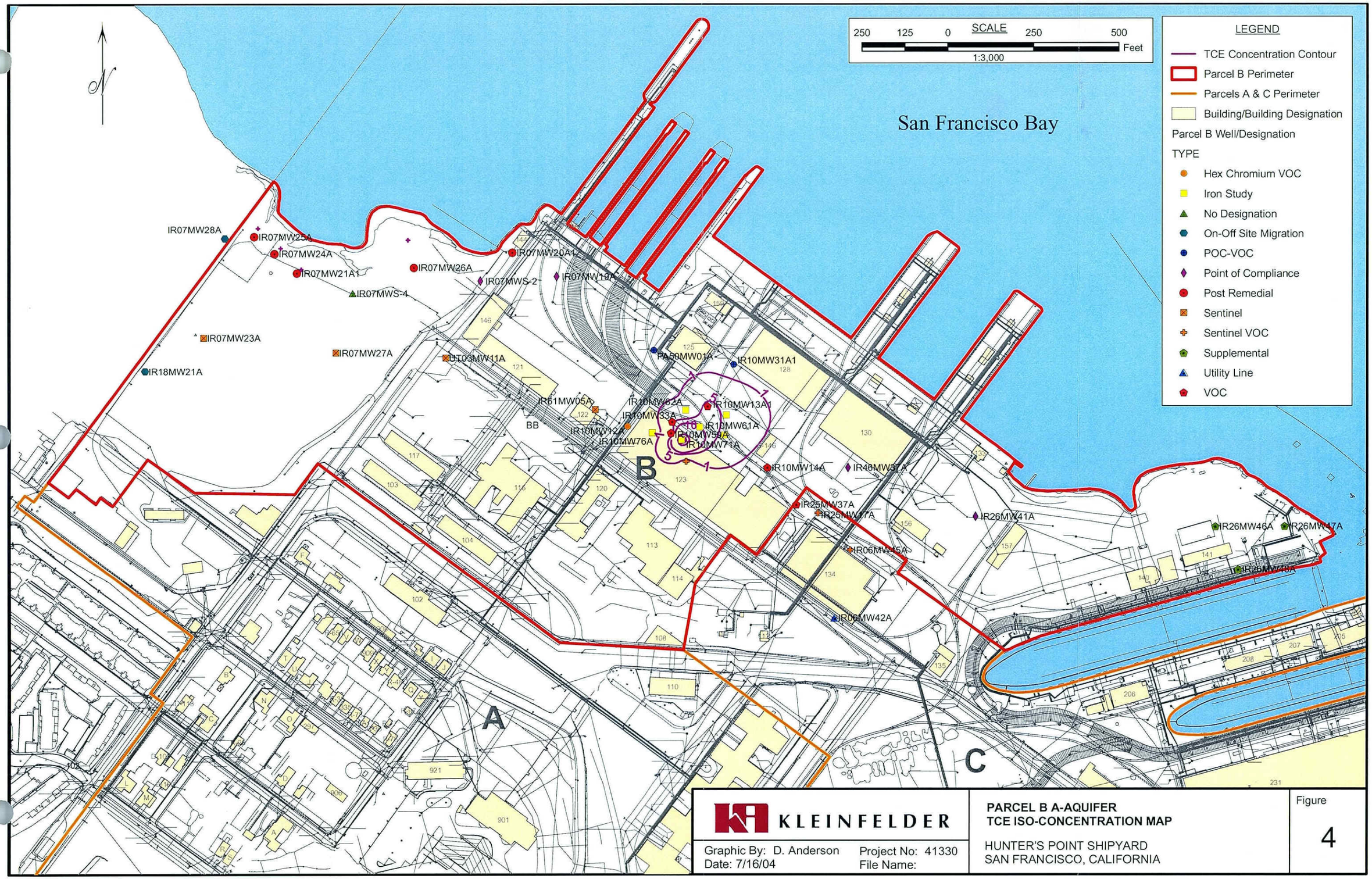

KLEINFELDER

Graphic By: D. Anderson
Date: 7/16/04

Project No: 41330
File Name:

PARCEL B A-AQUIFER
TCE ISO-CONCENTRATION MAP

HUNTER'S POINT SHIPYARD
SAN FRANCISCO, CALIFORNIA

Figure
4

Copyright Kleinfelder, Inc. 2004

APPENDIX A

Summary of Seventeenth Quarterly Analytical Results and Trigger Levels, January to March 2004 Sampling Event

SUMMARY OR ANALYTICAL RESULTS
Seventeeth Quarterly Groundwater Sampling Report - Parcel B
Hunters Point Shipyard
San Francisco, California

Well ID	Sample Number	Sample Date	Analytical Method	Analyte	Result	UNITS	Lab Qual	Valid Code	POC Trigger	SentinelTrigger	VOC Trigger	Utility Line Trigger	Other Well Trigger Level
IR06MW42A	0413H003	3/23/04	FUELS	DIESEL	920	µg/l	T1M						
IR06MW42A	0413H003	3/23/04	FUELS	GASOLINE	26	µg/l	G3						
IR06MW42A	0413H003	3/23/04	FUELS	MOTOR OIL	500	µg/l	U						
IR06MW42A	0413H003	3/23/04	INORGANICS	HEXAVALENT CHROMIUM	20	µg/l	U					5,000	
IR06MW42A	0413H003	3/23/04	INORGANICS	TOTAL SUSPENDED SOLIDS	10.0	mg/l	U						
IR06MW42A	0413H003	3/23/04	METALS	ALUMINUM	60.7	µg/l	J	J					
IR06MW42A	0413H003	3/23/04	METALS	ANTIMONY	60	µg/l	U					15,000	
IR06MW42A	0413H003	3/23/04	METALS	ARSENIC	11.2	µg/l						4,000	
IR06MW42A	0413H003	3/23/04	METALS	BARIUM	164	µg/l	J	J4				100,000	
IR06MW42A	0413H003	3/23/04	METALS	BERYLLIUM	5	µg/l	U					750	
IR06MW42A	0413H003	3/23/04	METALS	CADMIUM	5	µg/l	U					500	
IR06MW42A	0413H003	3/23/04	METALS	CALCIUM	34300	µg/l		J3					
IR06MW42A	0413H003	3/23/04	METALS	CHROMIUM	10	µg/l	U					5,000	
IR06MW42A	0413H003	3/23/04	METALS	COBALT	50	µg/l	U					80,000	
IR06MW42A	0413H003	3/23/04	METALS	COPPER	3.1	µg/l	J	U1				4,000	
IR06MW42A	0413H003	3/23/04	METALS	IRON	1140	µg/l							
IR06MW42A	0413H003	3/23/04	METALS	LEAD	10	µg/l	U					1,500	
IR06MW42A	0413H003	3/23/04	METALS	MAGNESIUM	40000	µg/l		J3					
IR06MW42A	0413H003	3/23/04	METALS	MANGANESE	248	µg/l							
IR06MW42A	0413H003	3/23/04	METALS	MERCURY	0.2	µg/l	U					50	
IR06MW42A	0413H003	3/23/04	METALS	NICKEL	40	µg/l	U					2,000	
IR06MW42A	0413H003	3/23/04	METALS	POTASSIUM	10800	µg/l		J3					
IR06MW42A	0413H003	3/23/04	METALS	SELENIUM	35	µg/l	U						
IR06MW42A	0413H003	3/23/04	METALS	SILVER	10	µg/l	U					500	
IR06MW42A	0413H003	3/23/04	METALS	SODIUM	130000	µg/l	E	CJ83					
IR06MW42A	0413H003	3/23/04	METALS	SODIUM	126000	µg/l	D	J3					
IR06MW42A	0413H003	3/23/04	METALS	THALLIUM	25	µg/l	U	UJ3				7,000	
IR06MW42A	0413H003	3/23/04	METALS	VANADIUM	3.2	µg/l	J	J					
IR06MW42A	0413H003	3/23/04	METALS	ZINC	60	µg/l	U					7,000	
IR06MW42A	0413H003	3/23/04	PESTICIDES	4,4'-DDD	0.02	µg/l	U						
IR06MW42A	0413H003	3/23/04	PESTICIDES	4,4'-DDE	0.02	µg/l	U						
IR06MW42A	0413H003	3/23/04	PESTICIDES	4,4'-DDT	0.02	µg/l	U						
IR06MW42A	0413H003	3/23/04	PESTICIDES	ALDRIN	0.01	µg/l	U						
IR06MW42A	0413H003	3/23/04	PESTICIDES	alpha-BHC	0.01	µg/l	U						
IR06MW42A	0413H003	3/23/04	PESTICIDES	alpha-CHLORDANE	0.01	µg/l	U						
IR06MW42A	0413H003	3/23/04	PESTICIDES	AROCLOR-1016	0.2	µg/l	U					5,000	
IR06MW42A	0413H003	3/23/04	PESTICIDES	AROCLOR-1221	0.4	µg/l	U					5,000	
IR06MW42A	0413H003	3/23/04	PESTICIDES	AROCLOR-1232	0.2	µg/l	U					5,000	
IR06MW42A	0413H003	3/23/04	PESTICIDES	AROCLOR-1242	0.2	µg/l	U					5,000	
IR06MW42A	0413H003	3/23/04	PESTICIDES	AROCLOR-1248	0.2	µg/l	U					5,000	
IR06MW42A	0413H003	3/23/04	PESTICIDES	AROCLOR-1254	0.2	µg/l	U					5,000	
IR06MW42A	0413H003	3/23/04	PESTICIDES	AROCLOR-1260	0.2	µg/l	U					5,000	
IR06MW42A	0413H003	3/23/04	PESTICIDES	AZINPHOSMETHYL	5.0	µg/l	U						
IR06MW42A	0413H003	3/23/04	PESTICIDES	beta-BHC	0.01	µg/l	U	UJ7					
IR06MW42A	0413H003	3/23/04	PESTICIDES	BOLSTAR	0.5	µg/l	U						
IR06MW42A	0413H003	3/23/04	PESTICIDES	CHLORPYRIFOS	0.5	µg/l	U						
IR06MW42A	0413H003	3/23/04	PESTICIDES	COUMAPHOS	1.0	µg/l	U						
IR06MW42A	0413H003	3/23/04	PESTICIDES	delta-BHC	0.01	µg/l	U						
IR06MW42A	0413H003	3/23/04	PESTICIDES	DEMETON	1.0	µg/l	U						
IR06MW42A	0413H003	3/23/04	PESTICIDES	DIAZINON	0.5	µg/l	U						
IR06MW42A	0413H003	3/23/04	PESTICIDES	DICHLORVOS	1.0	µg/l	U						
IR06MW42A	0413H003	3/23/04	PESTICIDES	DIELDRIN	0.02	µg/l	U						
IR06MW42A	0413H003	3/23/04	PESTICIDES	DIMETHOATE	0.5	µg/l	U	UJ7					
IR06MW42A	0413H003	3/23/04	PESTICIDES	DISULFOTON	0.5	µg/l	U						
IR06MW42A	0413H003	3/23/04	PESTICIDES	ENDOSULFAN I	0.01	µg/l	U						
IR06MW42A	0413H003	3/23/04	PESTICIDES	ENDOSULFAN II	0.02	µg/l	U						
IR06MW42A	0413H003	3/23/04	PESTICIDES	ENDOSULFAN SULFATE	0.02	µg/l	U						
IR06MW42A	0413H003	3/23/04	PESTICIDES	ENDRIN	0.02	µg/l	U						

SUMMARY OR ANALYTICAL RESULTS
Seventeeth Quarterly Groundwater Sampling Report - Parcel B
Hunters Point Shipyard
San Francisco, California

Well ID	Sample Number	Sample Date	Analytical Method	Analyte	Result	UNITS	Lab Qual	Valid Code	POC Trigger	Sentinel Trigger	VOC Trigger	Utility Line Trigger	Other Well Trigger Level
IR06MW42A	0413H003	3/23/04	PESTICIDES	ENDRIN ALDEHYDE	0.02	µg/l	U	UJ7					
IR06MW42A	0413H003	3/23/04	PESTICIDES	ENDRIN KETONE	0.02	µg/l	U						
IR06MW42A	0413H003	3/23/04	PESTICIDES	EPN	0.5	µg/l	U						
IR06MW42A	0413H003	3/23/04	PESTICIDES	ETHION	0.5	µg/l	U						
IR06MW42A	0413H003	3/23/04	PESTICIDES	ETHOPROP	0.5	µg/l	U						
IR06MW42A	0413H003	3/23/04	PESTICIDES	FAMPHUR	3.5	µg/l	U						
IR06MW42A	0413H003	3/23/04	PESTICIDES	FENSULFOTHION	2.5	µg/l	U	UJ7					
IR06MW42A	0413H003	3/23/04	PESTICIDES	FENTHION	0.5	µg/l	U						
IR06MW42A	0413H003	3/23/04	PESTICIDES	gamma-BHC (LINDANE)	0.01	µg/l	U						
IR06MW42A	0413H003	3/23/04	PESTICIDES	gamma-CHLORDANE	0.01	µg/l	U						
IR06MW42A	0413H003	3/23/04	PESTICIDES	HEPTACHLOR	0.01	µg/l	U						
IR06MW42A	0413H003	3/23/04	PESTICIDES	HEPTACHLOR EPOXIDE	0.01	µg/l	U						
IR06MW42A	0413H003	3/23/04	PESTICIDES	MALATHION	0.5	µg/l	U						
IR06MW42A	0413H003	3/23/04	PESTICIDES	MERPHOS	0.5	µg/l	U						
IR06MW42A	0413H003	3/23/04	PESTICIDES	METHOXYCHLOR	0.1	µg/l	U						
IR06MW42A	0413H003	3/23/04	PESTICIDES	MEVINPHOS	3.5	µg/l	U	UJ7					
IR06MW42A	0413H003	3/23/04	PESTICIDES	NALED	2.5	µg/l	U						
IR06MW42A	0413H003	3/23/04	PESTICIDES	PARATHION, ETHYL	0.5	µg/l	U						
IR06MW42A	0413H003	3/23/04	PESTICIDES	PARATHION, METHYL	0.5	µg/l	U						
IR06MW42A	0413H003	3/23/04	PESTICIDES	PHORATE	0.5	µg/l	U						
IR06MW42A	0413H003	3/23/04	PESTICIDES	RONNEL	0.5	µg/l	U						
IR06MW42A	0413H003	3/23/04	PESTICIDES	STIROPHOS	0.5	µg/l	U						
IR06MW42A	0413H003	3/23/04	PESTICIDES	SULFOTEP	0.5	µg/l	U						
IR06MW42A	0413H003	3/23/04	PESTICIDES	TOKUTHION	0.5	µg/l	U						
IR06MW42A	0413H003	3/23/04	PESTICIDES	TOXAPHENE	1	µg/l	U						
IR06MW42A	0413H003	3/23/04	PESTICIDES	TRICHLORONATE	0.5	µg/l	U						
IR06MW42A	0413H003	3/23/04	SEMI-VOLATILES	1,1'-BIPHENYL	10	µg/l	U						
IR06MW42A	0413H003	3/23/04	SEMI-VOLATILES	2,4,5-TRICHLOROPHENOL	25	µg/l	U						
IR06MW42A	0413H003	3/23/04	SEMI-VOLATILES	2,4,6-TRICHLOROPHENOL	10	µg/l	U						
IR06MW42A	0413H003	3/23/04	SEMI-VOLATILES	2,4-DICHLOROPHENOL	10	µg/l	U						
IR06MW42A	0413H003	3/23/04	SEMI-VOLATILES	2,4-DIMETHYLPHENOL	10	µg/l	U						
IR06MW42A	0413H003	3/23/04	SEMI-VOLATILES	2,4-DINITROPHENOL	25	µg/l	U						
IR06MW42A	0413H003	3/23/04	SEMI-VOLATILES	2,4-DINITROTOLUENE	10	µg/l	U						
IR06MW42A	0413H003	3/23/04	SEMI-VOLATILES	2,6-DINITROTOLUENE	10	µg/l	U						
IR06MW42A	0413H003	3/23/04	SEMI-VOLATILES	2-CHLORONAPHTHALENE	10	µg/l	U						
IR06MW42A	0413H003	3/23/04	SEMI-VOLATILES	2-CHLOROPHENOL	10	µg/l	U						
IR06MW42A	0413H003	3/23/04	SEMI-VOLATILES	2-METHYLNAPHTHALENE	27	µg/l							
IR06MW42A	0413H003	3/23/04	SEMI-VOLATILES	2-METHYLPHENOL	10	µg/l	U						
IR06MW42A	0413H003	3/23/04	SEMI-VOLATILES	2-NITROANILINE	25	µg/l	U						
IR06MW42A	0413H003	3/23/04	SEMI-VOLATILES	2-NITROPHENOL	10	µg/l	U						
IR06MW42A	0413H003	3/23/04	SEMI-VOLATILES	3,3'-DICHLOROBENZIDINE	10	µg/l	U						
IR06MW42A	0413H003	3/23/04	SEMI-VOLATILES	3-NITROANILINE	25	µg/l	U						
IR06MW42A	0413H003	3/23/04	SEMI-VOLATILES	4,6-DINITRO-2-METHYLPHENOL	25	µg/l	U						
IR06MW42A	0413H003	3/23/04	SEMI-VOLATILES	4-BROMOPHENYL PHENYL ETHER	10	µg/l	U						
IR06MW42A	0413H003	3/23/04	SEMI-VOLATILES	4-CHLORO-3-METHYLPHENOL	10	µg/l	U						
IR06MW42A	0413H003	3/23/04	SEMI-VOLATILES	4-CHLOROANILINE	10	µg/l	U						
IR06MW42A	0413H003	3/23/04	SEMI-VOLATILES	4-CHLOROPHENYL PHENYL ETHER	10	µg/l	U						
IR06MW42A	0413H003	3/23/04	SEMI-VOLATILES	4-METHYLPHENOL	10	µg/l	U						
IR06MW42A	0413H003	3/23/04	SEMI-VOLATILES	4-NITROANILINE	25	µg/l	U						
IR06MW42A	0413H003	3/23/04	SEMI-VOLATILES	4-NITROPHENOL	25	µg/l	U						
IR06MW42A	0413H003	3/23/04	SEMI-VOLATILES	ACENAPHTHENE	87	µg/l							
IR06MW42A	0413H003	3/23/04	SEMI-VOLATILES	ACENAPHTHYLENE	10	µg/l	U						
IR06MW42A	0413H003	3/23/04	SEMI-VOLATILES	ACETOPHENONE	10	µg/l	U						
IR06MW42A	0413H003	3/23/04	SEMI-VOLATILES	ANTHRACENE	3.6	µg/l	J	J					
IR06MW42A	0413H003	3/23/04	SEMI-VOLATILES	ATRAZINE	10	µg/l	U						
IR06MW42A	0413H003	3/23/04	SEMI-VOLATILES	BENZ(a)ANTHRACENE	10	µg/l	U						
IR06MW42A	0413H003	3/23/04	SEMI-VOLATILES	BENZALDEHYDE	10	µg/l	U						
IR06MW42A	0413H003	3/23/04	SEMI-VOLATILES	BENZO(a)PYRENE	10	µg/l	U						

SUMMARY OR ANALYTICAL RESULTS
Seventeeth Quarterly Groundwater Sampling Report - Parcel B
Hunters Point Shipyard
San Francisco, California

Well ID	Sample Number	Sample Date	Analytical Method	Analyte	Result	UNITS	Lab Qual	Valid Code	POC Trigger	SentinelTrigger	VOC Trigger	Utility Line Trigger	Other Well Trigger Level
IR06MW42A	0413H003	3/23/04	SEMI-VOLATILES	BENZO(b)FLUORANTHENE	10	µg/l	U						
IR06MW42A	0413H003	3/23/04	SEMI-VOLATILES	BENZO(ghi)PERYLENE	10	µg/l	U						
IR06MW42A	0413H003	3/23/04	SEMI-VOLATILES	BENZO(k)FLUORANTHENE	10	µg/l	U						
IR06MW42A	0413H003	3/23/04	SEMI-VOLATILES	BIS(2-CHLOROETHOXY)METHANE	10	µg/l	U						
IR06MW42A	0413H003	3/23/04	SEMI-VOLATILES	BIS(2-CHLOROETHYL)ETHER	10	µg/l	U						
IR06MW42A	0413H003	3/23/04	SEMI-VOLATILES	BIS(2-ETHYLHEXYL)PHTHALATE	10	µg/l	U						
IR06MW42A	0413H003	3/23/04	SEMI-VOLATILES	BUTYL BENZYL PHTHALATE	10	µg/l	U						
IR06MW42A	0413H003	3/23/04	SEMI-VOLATILES	CAPROLACTAM	10	µg/l	U						
IR06MW42A	0413H003	3/23/04	SEMI-VOLATILES	CARBAZOLE	4.5	µg/l	J	J					
IR06MW42A	0413H003	3/23/04	SEMI-VOLATILES	CHRYSENE	10	µg/l	U						
IR06MW42A	0413H003	3/23/04	SEMI-VOLATILES	DIBENZ(a,h)ANTHRACENE	10	µg/l	U						
IR06MW42A	0413H003	3/23/04	SEMI-VOLATILES	DIBENZOFURAN	32	µg/l							
IR06MW42A	0413H003	3/23/04	SEMI-VOLATILES	DIETHYL PHTHALATE	10	µg/l	U						
IR06MW42A	0413H003	3/23/04	SEMI-VOLATILES	DIMETHYL PHTHALATE	10	µg/l	U						
IR06MW42A	0413H003	3/23/04	SEMI-VOLATILES	DI-n-BUTYL PHTHALATE	10	µg/l	U						
IR06MW42A	0413H003	3/23/04	SEMI-VOLATILES	DI-n-OCTYL PHTHALATE	10	µg/l	U						
IR06MW42A	0413H003	3/23/04	SEMI-VOLATILES	FLUORANTHENE	12	µg/l							
IR06MW42A	0413H003	3/23/04	SEMI-VOLATILES	FLUORENE	30	µg/l							
IR06MW42A	0413H003	3/23/04	SEMI-VOLATILES	HEXACHLOROBENZENE	10	µg/l	U						
IR06MW42A	0413H003	3/23/04	SEMI-VOLATILES	HEXACHLOROBUTADIENE	10	µg/l	U						
IR06MW42A	0413H003	3/23/04	SEMI-VOLATILES	HEXACHLOROCYCLOPENTADIENE	10	µg/l	U						
IR06MW42A	0413H003	3/23/04	SEMI-VOLATILES	HEXACHLOROETHANE	10	µg/l	U						
IR06MW42A	0413H003	3/23/04	SEMI-VOLATILES	INDENO(1,2,3-cd)PYRENE	10	µg/l	U						
IR06MW42A	0413H003	3/23/04	SEMI-VOLATILES	ISOPHORONE	10	µg/l	U						
IR06MW42A	0413H003	3/23/04	SEMI-VOLATILES	NAPHTHALENE	220	µg/l	E	CJ8					
IR06MW42A	0413H003	3/23/04	SEMI-VOLATILES	NAPHTHALENE	270	µg/l	D						
IR06MW42A	0413H003	3/23/04	SEMI-VOLATILES	NITROBENZENE	10	µg/l	U						
IR06MW42A	0413H003	3/23/04	SEMI-VOLATILES	N-NITROSODI-n-PROPYLAMINE	10	µg/l	U						
IR06MW42A	0413H003	3/23/04	SEMI-VOLATILES	N-NITROSODIPHENYLAMINE	10	µg/l	U						
IR06MW42A	0413H003	3/23/04	SEMI-VOLATILES	PENTACHLOROPHENOL	25	µg/l	U						
IR06MW42A	0413H003	3/23/04	SEMI-VOLATILES	PHENANTHRENE	12	µg/l							
IR06MW42A	0413H003	3/23/04	SEMI-VOLATILES	PHENOL	10	µg/l	U						
IR06MW42A	0413H003	3/23/04	SEMI-VOLATILES	PROPANE, 2,2'-OXYBIS[1-CHLORO-	10	µg/l	U						
IR06MW42A	0413H003	3/23/04	SEMI-VOLATILES	PYRENE	7.1	µg/l	J	J					
IR06MW42A	0413H003	3/23/04	VOLATILES	1,1,1-TRICHLOROETHANE	0.5	µg/l	U						
IR06MW42A	0413H003	3/23/04	VOLATILES	1,1,2,2-TETRACHLOROETHANE	0.5	µg/l	U						
IR06MW42A	0413H003	3/23/04	VOLATILES	1,1,2-TRICHLORO-1,2,2-TRIFLUOROETHANE	0.5	µg/l	U						
IR06MW42A	0413H003	3/23/04	VOLATILES	1,1,2-TRICHLOROETHANE	0.5	µg/l	U						
IR06MW42A	0413H003	3/23/04	VOLATILES	1,1-DICHLOROETHANE	0.5	µg/l	U						
IR06MW42A	0413H003	3/23/04	VOLATILES	1,1-DICHLOROETHENE	0.5	µg/l	U						
IR06MW42A	0413H003	3/23/04	VOLATILES	1,2,3-TRICHLOROBENZENE	0.5	µg/l	U						
IR06MW42A	0413H003	3/23/04	VOLATILES	1,2,4-TRICHLOROBENZENE	0.5	µg/l	U						
IR06MW42A	0413H003	3/23/04	VOLATILES	1,2-DIBROMO-3-CHLOROPROPANE	1	µg/l	U						
IR06MW42A	0413H003	3/23/04	VOLATILES	1,2-DIBROMOETHANE	0.5	µg/l	U						
IR06MW42A	0413H003	3/23/04	VOLATILES	1,2-DICHLOROBENZENE	0.5	µg/l	U						
IR06MW42A	0413H003	3/23/04	VOLATILES	1,2-DICHLOROETHANE	0.5	µg/l	U						
IR06MW42A	0413H003	3/23/04	VOLATILES	1,2-DICHLOROPROPANE	0.5	µg/l	U						
IR06MW42A	0413H003	3/23/04	VOLATILES	1,3-DICHLOROBENZENE	0.5	µg/l	U						
IR06MW42A	0413H003	3/23/04	VOLATILES	1,4-DICHLOROBENZENE	0.5	µg/l	U						
IR06MW42A	0413H003	3/23/04	VOLATILES	2-BUTANONE	5	µg/l	U						
IR06MW42A	0413H003	3/23/04	VOLATILES	2-HEXANONE	5	µg/l	U						
IR06MW42A	0413H003	3/23/04	VOLATILES	4-METHYL-2-PENTANONE	5	µg/l	U						
IR06MW42A	0413H003	3/23/04	VOLATILES	ACETONE	5	µg/l	U						
IR06MW42A	0413H003	3/23/04	VOLATILES	BENZENE	0.24	µg/l	J	J					
IR06MW42A	0413H003	3/23/04	VOLATILES	BROMOCHLOROMETHANE	0.5	µg/l	U						
IR06MW42A	0413H003	3/23/04	VOLATILES	BROMODICHLOROMETHANE	0.5	µg/l	U						
IR06MW42A	0413H003	3/23/04	VOLATILES	BROMOFORM	0.5	µg/l	U						
IR06MW42A	0413H003	3/23/04	VOLATILES	BROMOMETHANE	0.5	µg/l	U	UJ7					

SUMMARY OR ANALYTICAL RESULTS
Seventeeth Quarterly Groundwater Sampling Report - Parcel B
Hunters Point Shipyard
San Francisco, California

Well ID	Sample Number	Sample Date	Analytical Method	Analyte	Result	UNITS	Lab Qual	Valid Code	POC Trigger	SentinelTrigger	VOC Trigger	Utility Line Trigger	Other Well Trigger Level
IR06MW42A	0413H003	3/23/04	VOLATILES	CARBON DISULFIDE	0.5	µg/l	U						
IR06MW42A	0413H003	3/23/04	VOLATILES	CARBON TETRACHLORIDE	0.5	µg/l	U						
IR06MW42A	0413H003	3/23/04	VOLATILES	CHLOROBENZENE	0.5	µg/l	U						
IR06MW42A	0413H003	3/23/04	VOLATILES	CHLOROETHANE	0.5	µg/l	U						
IR06MW42A	0413H003	3/23/04	VOLATILES	CHLOROFORM	0.5	µg/l	U						
IR06MW42A	0413H003	3/23/04	VOLATILES	CHLOROMETHANE	0.5	µg/l	U						
IR06MW42A	0413H003	3/23/04	VOLATILES	cis-1,2-DICHLOROETHENE	0.5	µg/l	U						
IR06MW42A	0413H003	3/23/04	VOLATILES	cis-1,3-DICHLOROPROPENE	0.5	µg/l	U						
IR06MW42A	0413H003	3/23/04	VOLATILES	CYCLOHEXANE	0.5	µg/l	U						
IR06MW42A	0413H003	3/23/04	VOLATILES	CYCLOHEXANE, METHYL-	0.5	µg/l	U						
IR06MW42A	0413H003	3/23/04	VOLATILES	DIBROMOCHLOROMETHANE	0.5	µg/l	U						
IR06MW42A	0413H003	3/23/04	VOLATILES	DICHLORODIFLUOROMETHANE	0.5	µg/l	U						
IR06MW42A	0413H003	3/23/04	VOLATILES	ETHYL BENZENE	1.9	µg/l							
IR06MW42A	0413H003	3/23/04	VOLATILES	ISOPROPYLBENZENE	0.94	µg/l							
IR06MW42A	0413H003	3/23/04	VOLATILES	METHYL ACETATE	0.5	µg/l	U						
IR06MW42A	0413H003	3/23/04	VOLATILES	METHYL tert-BUTYL ETHER	0.5	µg/l	U						
IR06MW42A	0413H003	3/23/04	VOLATILES	METHYLENE CHLORIDE	0.5	µg/l	U						
IR06MW42A	0413H003	3/23/04	VOLATILES	STYRENE	0.5	µg/l	U						
IR06MW42A	0413H003	3/23/04	VOLATILES	TETRACHLOROETHENE	0.5	µg/l	U						
IR06MW42A	0413H003	3/23/04	VOLATILES	TOLUENE	0.36	µg/l	J	J					
IR06MW42A	0413H003	3/23/04	VOLATILES	trans-1,2-DICHLOROETHENE	0.5	µg/l	U						
IR06MW42A	0413H003	3/23/04	VOLATILES	trans-1,3-DICHLOROPROPENE	0.5	µg/l	U						
IR06MW42A	0413H003	3/23/04	VOLATILES	TRICHLOROETHENE	0.5	µg/l	U						
IR06MW42A	0413H003	3/23/04	VOLATILES	TRICHLOROFLUOROMETHANE	0.5	µg/l	U						
IR06MW42A	0413H003	3/23/04	VOLATILES	VINYL CHLORIDE	0.5	µg/l	U					200	
IR06MW42A	0413H003	3/23/04	VOLATILES	XYLENES (TOTAL)	2.0	µg/l							
IR06MW45A	0414H015	3/30/04	FUELS	DIESEL	50	µg/l	U						
IR06MW45A	0414H015	3/30/04	FUELS	GASOLINE	20	µg/l	U						
IR06MW45A	0414H015	3/30/04	FUELS	MOTOR OIL	500	µg/l	U						
IR06MW45A	0414H015	3/30/04	INORGANICS	HEXAVALENT CHROMIUM	20	µg/l	U						
IR06MW45A	0414H015	3/30/04	INORGANICS	TOTAL SUSPENDED SOLIDS	22	mg/l							
IR06MW45A	0414H015	3/30/04	METALS	ALUMINUM	1130	µg/l	J	U1					
IR06MW45A	0414H015	3/30/04	METALS	ANTIMONY	600	µg/l	U			5,000			
IR06MW45A	0414H015	3/30/04	METALS	ARSENIC	100	µg/l	U	R2		360			
IR06MW45A	0414H015	3/30/04	METALS	BARIUM	133	µg/l	J	J		5,040			
IR06MW45A	0414H015	3/30/04	METALS	BERYLLIUM	50	µg/l	U			14			
IR06MW45A	0414H015	3/30/04	METALS	CADMIUM	50	µg/l	U			93			
IR06MW45A	0414H015	3/30/04	METALS	CALCIUM	289000	µg/l		J3					
IR06MW45A	0414H015	3/30/04	METALS	CHROMIUM	100	µg/l	U			157			
IR06MW45A	0414H015	3/30/04	METALS	COBALT	500	µg/l	U			208			
IR06MW45A	0414H015	3/30/04	METALS	COPPER	250	µg/l	U			280			
IR06MW45A	0414H015	3/30/04	METALS	IRON	1270	µg/l							
IR06MW45A	0414H015	3/30/04	METALS	LEAD	100	µg/l	U			144			
IR06MW45A	0414H015	3/30/04	METALS	MAGNESIUM	862000	µg/l		J3					
IR06MW45A	0414H015	3/30/04	METALS	MANGANESE	970	µg/l				81,400			
IR06MW45A	0414H015	3/30/04	METALS	MERCURY	0.20	µg/l		U1		6			
IR06MW45A	0414H015	3/30/04	METALS	NICKEL	400	µg/l	U			965			
IR06MW45A	0414H015	3/30/04	METALS	POTASSIUM	239000	µg/l		J3					
IR06MW45A	0414H015	3/30/04	METALS	SELENIUM	64.2	µg/l	J	J3					
IR06MW45A	0414H015	3/30/04	METALS	SILVER	100	µg/l	U			74.3			
IR06MW45A	0414H015	3/30/04	METALS	SODIUM	7430000	µg/l	E	CJ83					
IR06MW45A	0414H015	3/30/04	METALS	SODIUM	7510000	µg/l	D	J3					
IR06MW45A	0414H015	3/30/04	METALS	THALLIUM	164	µg/l	J	U1		130			
IR06MW45A	0414H015	3/30/04	METALS	VANADIUM	500	µg/l	U						
IR06MW45A	0414H015	3/30/04	METALS	ZINC	600	µg/l	U			810			
IR06MW45A	0414H015	3/30/04	VOLATILES	1,1,1-TRICHLOROETHANE	0.5	µg/l	U						
IR06MW45A	0414H015	3/30/04	VOLATILES	1,1,2,2-TETRACHLOROETHANE	0.5	µg/l	U						
IR06MW45A	0414H015	3/30/04	VOLATILES	1,1,2-TRICHLORO-1,2,2-TRIFLUOROETHANE	0.5	µg/l	U						

SUMMARY OR ANALYTICAL RESULTS
Seventeeth Quarterly Groundwater Sampling Report - Parcel B
Hunters Point Shipyard
San Francisco, California

Well ID	Sample Number	Sample Date	Analytical Method	Analyte	Result	UNITS	Lab Qual	Valid Code	POC Trigger	SentinelTrigger	VOC Trigger	Utility Line Trigger	Other Well Trigger Level
IR06MW45A	0414H015	3/30/04	VOLATILES	1,1,2-TRICHLOROETHANE	0.5	µg/l	U						
IR06MW45A	0414H015	3/30/04	VOLATILES	1,1-DICHLOROETHANE	0.5	µg/l	U						
IR06MW45A	0414H015	3/30/04	VOLATILES	1,1-DICHLOROETHENE	0.5	µg/l	U						
IR06MW45A	0414H015	3/30/04	VOLATILES	1,2,3-TRICHLOROBENZENE	0.5	µg/l	U						
IR06MW45A	0414H015	3/30/04	VOLATILES	1,2,4-TRICHLOROBENZENE	0.5	µg/l	U						
IR06MW45A	0414H015	3/30/04	VOLATILES	1,2-DIBROMO-3-CHLOROPROPANE	1	µg/l	U	UJ7					
IR06MW45A	0414H015	3/30/04	VOLATILES	1,2-DIBROMOETHANE	0.5	µg/l	U						
IR06MW45A	0414H015	3/30/04	VOLATILES	1,2-DICHLOROBENZENE	0.5	µg/l	U						
IR06MW45A	0414H015	3/30/04	VOLATILES	1,2-DICHLOROETHANE	0.5	µg/l	U						
IR06MW45A	0414H015	3/30/04	VOLATILES	1,2-DICHLOROPROPANE	0.5	µg/l	U						
IR06MW45A	0414H015	3/30/04	VOLATILES	1,3-DICHLOROBENZENE	0.5	µg/l	U						
IR06MW45A	0414H015	3/30/04	VOLATILES	1,4-DICHLOROBENZENE	0.5	µg/l	U						
IR06MW45A	0414H015	3/30/04	VOLATILES	2-BUTANONE	5	µg/l	U						
IR06MW45A	0414H015	3/30/04	VOLATILES	2-HEXANONE	5	µg/l	U						
IR06MW45A	0414H015	3/30/04	VOLATILES	4-METHYL-2-PENTANONE	5	µg/l	U						
IR06MW45A	0414H015	3/30/04	VOLATILES	ACETONE	5	µg/l	U	UJ7					
IR06MW45A	0414H015	3/30/04	VOLATILES	BENZENE	0.5	µg/l	U						
IR06MW45A	0414H015	3/30/04	VOLATILES	BROMOCHLOROMETHANE	0.5	µg/l	U						
IR06MW45A	0414H015	3/30/04	VOLATILES	BROMODICHLOROMETHANE	0.5	µg/l	U						
IR06MW45A	0414H015	3/30/04	VOLATILES	BROMOFORM	0.5	µg/l	U						
IR06MW45A	0414H015	3/30/04	VOLATILES	BROMOMETHANE	0.5	µg/l	U						
IR06MW45A	0414H015	3/30/04	VOLATILES	CARBON DISULFIDE	0.5	µg/l	U						
IR06MW45A	0414H015	3/30/04	VOLATILES	CARBON TETRACHLORIDE	0.5	µg/l	U						
IR06MW45A	0414H015	3/30/04	VOLATILES	CHLOROBENZENE	0.5	µg/l	U						
IR06MW45A	0414H015	3/30/04	VOLATILES	CHLOROETHANE	0.5	µg/l	U						
IR06MW45A	0414H015	3/30/04	VOLATILES	CHLOROFORM	0.5	µg/l	U						
IR06MW45A	0414H015	3/30/04	VOLATILES	CHLOROMETHANE	0.5	µg/l	U						
IR06MW45A	0414H015	3/30/04	VOLATILES	cis-1,2-DICHLOROETHENE	0.5	µg/l	U			85			
IR06MW45A	0414H015	3/30/04	VOLATILES	cis-1,3-DICHLOROPROPENE	0.5	µg/l	U						
IR06MW45A	0414H015	3/30/04	VOLATILES	CYCLOHEXANE	0.5	µg/l	U						
IR06MW45A	0414H015	3/30/04	VOLATILES	CYCLOHEXANE, METHYL-	0.5	µg/l	U						
IR06MW45A	0414H015	3/30/04	VOLATILES	DIBROMOCHLOROMETHANE	0.5	µg/l	U						
IR06MW45A	0414H015	3/30/04	VOLATILES	DICHLORODIFLUOROMETHANE	0.5	µg/l	U						
IR06MW45A	0414H015	3/30/04	VOLATILES	ETHYL BENZENE	0.5	µg/l	U						
IR06MW45A	0414H015	3/30/04	VOLATILES	ISOPROPYLBENZENE	0.5	µg/l	U						
IR06MW45A	0414H015	3/30/04	VOLATILES	METHYL ACETATE	0.5	µg/l	U	UJ7					
IR06MW45A	0414H015	3/30/04	VOLATILES	METHYL tert-BUTYL ETHER	0.5	µg/l	U						
IR06MW45A	0414H015	3/30/04	VOLATILES	METHYLENE CHLORIDE	0.5	µg/l	U						
IR06MW45A	0414H015	3/30/04	VOLATILES	STYRENE	0.5	µg/l	U						
IR06MW45A	0414H015	3/30/04	VOLATILES	TETRACHLOROETHENE	0.5	µg/l	U						
IR06MW45A	0414H015	3/30/04	VOLATILES	TOLUENE	0.5	µg/l	U						
IR06MW45A	0414H015	3/30/04	VOLATILES	trans-1,2-DICHLOROETHENE	0.5	µg/l	U			85			
IR06MW45A	0414H015	3/30/04	VOLATILES	trans-1,3-DICHLOROPROPENE	0.5	µg/l	U						
IR06MW45A	0414H015	3/30/04	VOLATILES	TRICHLOROETHENE	0.5	µg/l	U			114			
IR06MW45A	0414H015	3/30/04	VOLATILES	TRICHLOROFLUOROMETHANE	0.5	µg/l	U						
IR06MW45A	0414H015	3/30/04	VOLATILES	VINYL CHLORIDE	0.5	µg/l	U			55			
IR06MW45A	0414H015	3/30/04	VOLATILES	XYLENES (TOTAL)	0.5	µg/l	U						
IR07MW19A	0413M003	3/23/04	FUELS	DIESEL	50	µg/l	U						
IR07MW19A	0413M003	3/23/04	FUELS	GASOLINE	20	µg/l	U						
IR07MW19A	0413M003	3/23/04	FUELS	MOTOR OIL	500	µg/l	U	UJ7					
IR07MW19A	0413M003	3/23/04	INORGANICS	HEXAVALENT CHROMIUM	20	µg/l	U						
IR07MW19A	0413M003	3/23/04	INORGANICS	TOTAL SUSPENDED SOLIDS	10.0	mg/l	U						
IR07MW19A	0413M003	3/23/04	METALS	ALUMINUM	635	µg/l							
IR07MW19A	0413M003	3/23/04	METALS	ANTIMONY	53.8	µg/l	J	J	500				
IR07MW19A	0413M003	3/23/04	METALS	ARSENIC	20	µg/l	U		36				
IR07MW19A	0413M003	3/23/04	METALS	BARIUM	45.6	µg/l	J	J4	504				
IR07MW19A	0413M003	3/23/04	METALS	BERYLLIUM	3.3	µg/l	J	J	1.4				
IR07MW19A	0413M003	3/23/04	METALS	CADMIUM	10	µg/l	U		9.3				

SUMMARY OR ANALYTICAL RESULTS
Seventeeth Quarterly Groundwater Sampling Report - Parcel B
Hunters Point Shipyard
San Francisco, California

Well ID	Sample Number	Sample Date	Analytical Method	Analyte	Result	UNITS	Lab Qual	Valid Code	POC Trigger	SentinelTrigger	VOC Trigger	Utility Line Trigger	Other Well Trigger Level
IR07MW19A	0413M003	3/23/04	METALS	CALCIUM	211000	µg/l	E	CJ8					
IR07MW19A	0413M003	3/23/04	METALS	CALCIUM	208000	µg/l	D	J3					
IR07MW19A	0413M003	3/23/04	METALS	CHROMIUM	14.0	µg/l	J	U2	15.7				
IR07MW19A	0413M003	3/23/04	METALS	COBALT	100	µg/l	U		20.8				
IR07MW19A	0413M003	3/23/04	METALS	COPPER	50	µg/l	U		26				
IR07MW19A	0413M003	3/23/04	METALS	IRON	200	µg/l	U						
IR07MW19A	0413M003	3/23/04	METALS	LEAD	20	µg/l	U		14.4				
IR07MW19A	0413M003	3/23/04	METALS	MAGNESIUM	677000	µg/l	E	CJ8					
IR07MW19A	0413M003	3/23/04	METALS	MAGNESIUM	645000	µg/l	D	J3					
IR07MW19A	0413M003	3/23/04	METALS	MANGANESE	7.4	µg/l	J	U2	8,140				
IR07MW19A	0413M003	3/23/04	METALS	MERCURY	0.2	µg/l	U		0.60				
IR07MW19A	0413M003	3/23/04	METALS	NICKEL	80	µg/l	U		96.5				
IR07MW19A	0413M003	3/23/04	METALS	POTASSIUM	249000	µg/l	E	CJ83					
IR07MW19A	0413M003	3/23/04	METALS	POTASSIUM	207000	µg/l	D	J3					
IR07MW19A	0413M003	3/23/04	METALS	SELENIUM	37.6	µg/l	J	J					
IR07MW19A	0413M003	3/23/04	METALS	SILVER	20	µg/l	U		7.43				
IR07MW19A	0413M003	3/23/04	METALS	SODIUM	6690000	µg/l	E	CJ8					
IR07MW19A	0413M003	3/23/04	METALS	SODIUM	5220000	µg/l	D	J3					
IR07MW19A	0413M003	3/23/04	METALS	THALLIUM	183	µg/l		J3	13				
IR07MW19A	0413M003	3/23/04	METALS	VANADIUM	6.4	µg/l	J	J					
IR07MW19A	0413M003	3/23/04	METALS	ZINC	120	µg/l	U		81				
IR07MW19A	0413M003	3/23/04	VOLATILES	1,1,1-TRICHLOROETHANE	0.5	µg/l	U						
IR07MW19A	0413M003	3/23/04	VOLATILES	1,1,2,2-TETRACHLOROETHANE	0.5	µg/l	U						
IR07MW19A	0413M003	3/23/04	VOLATILES	1,1,2-TRICHLORO-1,2,2-TRIFLUOROETHANE	0.5	µg/l	U						
IR07MW19A	0413M003	3/23/04	VOLATILES	1,1,2-TRICHLOROETHANE	0.5	µg/l	U						
IR07MW19A	0413M003	3/23/04	VOLATILES	1,1-DICHLOROETHANE	0.5	µg/l	U						
IR07MW19A	0413M003	3/23/04	VOLATILES	1,1-DICHLOROETHENE	0.5	µg/l	U						
IR07MW19A	0413M003	3/23/04	VOLATILES	1,2,3-TRICHLOROBENZENE	0.5	µg/l	U						
IR07MW19A	0413M003	3/23/04	VOLATILES	1,2,4-TRICHLOROBENZENE	0.5	µg/l	U						
IR07MW19A	0413M003	3/23/04	VOLATILES	1,2-DIBROMO-3-CHLOROPROPANE	1	µg/l	U						
IR07MW19A	0413M003	3/23/04	VOLATILES	1,2-DIBROMOETHANE	0.5	µg/l	U						
IR07MW19A	0413M003	3/23/04	VOLATILES	1,2-DICHLOROBENZENE	0.5	µg/l	U						
IR07MW19A	0413M003	3/23/04	VOLATILES	1,2-DICHLOROETHANE	0.5	µg/l	U						
IR07MW19A	0413M003	3/23/04	VOLATILES	1,2-DICHLOROPROPANE	0.5	µg/l	U						
IR07MW19A	0413M003	3/23/04	VOLATILES	1,3-DICHLOROBENZENE	0.5	µg/l	U						
IR07MW19A	0413M003	3/23/04	VOLATILES	1,4-DICHLOROBENZENE	0.5	µg/l	U						
IR07MW19A	0413M003	3/23/04	VOLATILES	2-BUTANONE	5	µg/l	U						
IR07MW19A	0413M003	3/23/04	VOLATILES	2-HEXANONE	5	µg/l	U						
IR07MW19A	0413M003	3/23/04	VOLATILES	4-METHYL-2-PENTANONE	5	µg/l	U						
IR07MW19A	0413M003	3/23/04	VOLATILES	ACETONE	5	µg/l	U						
IR07MW19A	0413M003	3/23/04	VOLATILES	BENZENE	0.5	µg/l	U						
IR07MW19A	0413M003	3/23/04	VOLATILES	BROMOCHLOROMETHANE	0.5	µg/l	U						
IR07MW19A	0413M003	3/23/04	VOLATILES	BROMODICHLOROMETHANE	0.5	µg/l	U						
IR07MW19A	0413M003	3/23/04	VOLATILES	BROMOFORM	0.5	µg/l	U						
IR07MW19A	0413M003	3/23/04	VOLATILES	BROMOMETHANE	0.5	µg/l	U	UJ7					
IR07MW19A	0413M003	3/23/04	VOLATILES	CARBON DISULFIDE	0.5	µg/l	U						
IR07MW19A	0413M003	3/23/04	VOLATILES	CARBON TETRACHLORIDE	0.5	µg/l	U						
IR07MW19A	0413M003	3/23/04	VOLATILES	CHLOROBENZENE	0.5	µg/l	U						
IR07MW19A	0413M003	3/23/04	VOLATILES	CHLOROETHANE	0.5	µg/l	U						
IR07MW19A	0413M003	3/23/04	VOLATILES	CHLOROFORM	0.5	µg/l	U						
IR07MW19A	0413M003	3/23/04	VOLATILES	CHLOROMETHANE	0.5	µg/l	U						
IR07MW19A	0413M003	3/23/04	VOLATILES	cis-1,2-DICHLOROETHENE	0.5	µg/l	U		85				
IR07MW19A	0413M003	3/23/04	VOLATILES	cis-1,3-DICHLOROPROPENE	0.5	µg/l	U						
IR07MW19A	0413M003	3/23/04	VOLATILES	CYCLOHEXANE	0.5	µg/l	U						
IR07MW19A	0413M003	3/23/04	VOLATILES	CYCLOHEXANE, METHYL-	0.5	µg/l	U						
IR07MW19A	0413M003	3/23/04	VOLATILES	DIBROMOCHLOROMETHANE	0.5	µg/l	U						
IR07MW19A	0413M003	3/23/04	VOLATILES	DICHLORODIFLUOROMETHANE	0.5	µg/l	U						
IR07MW19A	0413M003	3/23/04	VOLATILES	ETHYL BENZENE	0.5	µg/l	U						

SUMMARY OR ANALYTICAL RESULTS
Seventeeth Quarterly Groundwater Sampling Report - Parcel B
Hunters Point Shipyard
San Francisco, California

Well ID	Sample Number	Sample Date	Analytical Method	Analyte	Result	UNITS	Lab Qual	Valid Code	POC Trigger	Sentinel Trigger	VOC Trigger	Utility Line Trigger	Other Well Trigger Level
IR07MW19A	0413M003	3/23/04	VOLATILES	ISOPROPYLBENZENE	0.5	µg/l	U						
IR07MW19A	0413M003	3/23/04	VOLATILES	METHYL ACETATE	0.5	µg/l	U						
IR07MW19A	0413M003	3/23/04	VOLATILES	METHYL tert-BUTYL ETHER	0.5	µg/l	U						
IR07MW19A	0413M003	3/23/04	VOLATILES	METHYLENE CHLORIDE	0.5	µg/l	U						
IR07MW19A	0413M003	3/23/04	VOLATILES	STYRENE	0.5	µg/l	U						
IR07MW19A	0413M003	3/23/04	VOLATILES	TETRACHLOROETHENE	0.5	µg/l	U						
IR07MW19A	0413M003	3/23/04	VOLATILES	TOLUENE	0.5	µg/l	U						
IR07MW19A	0413M003	3/23/04	VOLATILES	trans-1,2-DICHLOROETHENE	0.5	µg/l	U		85				
IR07MW19A	0413M003	3/23/04	VOLATILES	trans-1,3-DICHLOROPROPENE	0.5	µg/l	U						
IR07MW19A	0413M003	3/23/04	VOLATILES	TRICHLOROETHENE	0.5	µg/l	U		114				
IR07MW19A	0413M003	3/23/04	VOLATILES	TRICHLOROFLUOROMETHANE	0.5	µg/l	U						
IR07MW19A	0413M003	3/23/04	VOLATILES	VINYL CHLORIDE	0.5	µg/l	U		55				
IR07MW19A	0413M003	3/23/04	VOLATILES	XYLENES (TOTAL)	0.5	µg/l	U						
IR07MW20A1	0413M006	3/24/04	FUELS	DIESEL	50	µg/l	U						
IR07MW20A1	0413M006	3/24/04	FUELS	GASOLINE	20	µg/l	U						
IR07MW20A1	0413M006	3/24/04	FUELS	MOTOR OIL	500	µg/l	U						
IR07MW20A1	0413M006	3/24/04	INORGANICS	HEXAVALENT CHROMIUM	20	µg/l	U						
IR07MW20A1	0413M006	3/24/04	INORGANICS	TOTAL SUSPENDED SOLIDS	10.0	mg/l	U						
IR07MW20A1	0413M006	3/24/04	METALS	ALUMINUM	699	µg/l		U1					
IR07MW20A1	0413M006	3/24/04	METALS	ANTIMONY	51.4	µg/l	J	J					
IR07MW20A1	0413M006	3/24/04	METALS	ARSENIC	20	µg/l	U						
IR07MW20A1	0413M006	3/24/04	METALS	BARIUM	31.3	µg/l	J	J					
IR07MW20A1	0413M006	3/24/04	METALS	BERYLLIUM	3.9	µg/l	J	J					
IR07MW20A1	0413M006	3/24/04	METALS	CADMIUM	10	µg/l	U						
IR07MW20A1	0413M006	3/24/04	METALS	CALCIUM	222000	µg/l	E	CJ83					
IR07MW20A1	0413M006	3/24/04	METALS	CALCIUM	202000	µg/l	D	J3					
IR07MW20A1	0413M006	3/24/04	METALS	CHROMIUM	19.1	µg/l	J	J					
IR07MW20A1	0413M006	3/24/04	METALS	COBALT	100	µg/l	U						
IR07MW20A1	0413M006	3/24/04	METALS	COPPER	50	µg/l	U						
IR07MW20A1	0413M006	3/24/04	METALS	IRON	200	µg/l	U						
IR07MW20A1	0413M006	3/24/04	METALS	LEAD	20	µg/l	U						
IR07MW20A1	0413M006	3/24/04	METALS	MAGNESIUM	726000	µg/l	E	CJ83					
IR07MW20A1	0413M006	3/24/04	METALS	MAGNESIUM	630000	µg/l	D	J3					
IR07MW20A1	0413M006	3/24/04	METALS	MANGANESE	11.3	µg/l	J	J					
IR07MW20A1	0413M006	3/24/04	METALS	MERCURY	0.2	µg/l	U						
IR07MW20A1	0413M006	3/24/04	METALS	NICKEL	80	µg/l	U						
IR07MW20A1	0413M006	3/24/04	METALS	POTASSIUM	277000	µg/l	E	CJ83					
IR07MW20A1	0413M006	3/24/04	METALS	POTASSIUM	214000	µg/l	D	J3					
IR07MW20A1	0413M006	3/24/04	METALS	SELENIUM	42.8	µg/l	J	J					
IR07MW20A1	0413M006	3/24/04	METALS	SILVER	20	µg/l	U						
IR07MW20A1	0413M006	3/24/04	METALS	SODIUM	7330000	µg/l	E	CJ83					
IR07MW20A1	0413M006	3/24/04	METALS	SODIUM	5420000	µg/l	D	J3					
IR07MW20A1	0413M006	3/24/04	METALS	THALLIUM	208	µg/l		U1J3					
IR07MW20A1	0413M006	3/24/04	METALS	VANADIUM	6.1	µg/l	J	J					
IR07MW20A1	0413M006	3/24/04	METALS	ZINC	120	µg/l	U						
IR07MW20A1	0413M006	3/24/04	VOLATILES	1,1,1-TRICHLOROETHANE	0.5	µg/l	U						
IR07MW20A1	0413M006	3/24/04	VOLATILES	1,1,2,2-TETRACHLOROETHANE	0.5	µg/l	U						
IR07MW20A1	0413M006	3/24/04	VOLATILES	1,1,2-TRICHLORO-1,2,2-TRIFLUOROETHANE	0.5	µg/l	U						
IR07MW20A1	0413M006	3/24/04	VOLATILES	1,1,2-TRICHLOROETHANE	0.5	µg/l	U						
IR07MW20A1	0413M006	3/24/04	VOLATILES	1,1-DICHLOROETHANE	0.5	µg/l	U						
IR07MW20A1	0413M006	3/24/04	VOLATILES	1,1-DICHLOROETHENE	0.5	µg/l	U						
IR07MW20A1	0413M006	3/24/04	VOLATILES	1,2,3-TRICHLOROBENZENE	0.5	µg/l	U						
IR07MW20A1	0413M006	3/24/04	VOLATILES	1,2,4-TRICHLOROBENZENE	0.5	µg/l	U						
IR07MW20A1	0413M006	3/24/04	VOLATILES	1,2-DIBROMO-3-CHLOROPROPANE	1	µg/l	U	UJ7					
IR07MW20A1	0413M006	3/24/04	VOLATILES	1,2-DIBROMOETHANE	0.5	µg/l	U						
IR07MW20A1	0413M006	3/24/04	VOLATILES	1,2-DICHLOROBENZENE	0.5	µg/l	U						
IR07MW20A1	0413M006	3/24/04	VOLATILES	1,2-DICHLOROETHANE	0.5	µg/l		U2					
IR07MW20A1	0413M006	3/24/04	VOLATILES	1,2-DICHLOROPROPANE	0.5	µg/l	U						

SUMMARY OR ANALYTICAL RESULTS
Seventeeth Quarterly Groundwater Sampling Report - Parcel B
Hunters Point Shipyard
San Francisco, California

Well ID	Sample Number	Sample Date	Analytical Method	Analyte	Result	UNITS	Lab Qual	Valid Code	POC Trigger	SentinelTrigger	VOC Trigger	Utility Line Trigger	Other Well Trigger Level
IR07MW20A1	0413M006	3/24/04	VOLATILES	1,3-DICHLOROBENZENE	0.5	µg/l	U						
IR07MW20A1	0413M006	3/24/04	VOLATILES	1,4-DICHLOROBENZENE	0.5	µg/l	U						
IR07MW20A1	0413M006	3/24/04	VOLATILES	2-BUTANONE	5	µg/l	U						
IR07MW20A1	0413M006	3/24/04	VOLATILES	2-HEXANONE	5	µg/l	U						
IR07MW20A1	0413M006	3/24/04	VOLATILES	4-METHYL-2-PENTANONE	5	µg/l	U						
IR07MW20A1	0413M006	3/24/04	VOLATILES	ACETONE	5	µg/l	U	UJ7					
IR07MW20A1	0413M006	3/24/04	VOLATILES	BENZENE	0.5	µg/l	U						
IR07MW20A1	0413M006	3/24/04	VOLATILES	BROMOCHLOROMETHANE	0.5	µg/l	U						
IR07MW20A1	0413M006	3/24/04	VOLATILES	BROMODICHLOROMETHANE	0.5	µg/l	U						
IR07MW20A1	0413M006	3/24/04	VOLATILES	BROMOFORM	0.5	µg/l	U						
IR07MW20A1	0413M006	3/24/04	VOLATILES	BROMOMETHANE	0.5	µg/l	U						
IR07MW20A1	0413M006	3/24/04	VOLATILES	CARBON DISULFIDE	0.5	µg/l	U						
IR07MW20A1	0413M006	3/24/04	VOLATILES	CARBON TETRACHLORIDE	0.5	µg/l	U						
IR07MW20A1	0413M006	3/24/04	VOLATILES	CHLOROBENZENE	0.5	µg/l	U						
IR07MW20A1	0413M006	3/24/04	VOLATILES	CHLOROETHANE	0.5	µg/l	U						
IR07MW20A1	0413M006	3/24/04	VOLATILES	CHLOROFORM	0.5	µg/l	U						
IR07MW20A1	0413M006	3/24/04	VOLATILES	CHLOROMETHANE	0.5	µg/l	U						
IR07MW20A1	0413M006	3/24/04	VOLATILES	cis-1,2-DICHLOROETHENE	0.5	µg/l	U						
IR07MW20A1	0413M006	3/24/04	VOLATILES	cis-1,3-DICHLOROPROPENE	0.5	µg/l	U						
IR07MW20A1	0413M006	3/24/04	VOLATILES	CYCLOHEXANE	0.5	µg/l	U						
IR07MW20A1	0413M006	3/24/04	VOLATILES	CYCLOHEXANE, METHYL-	0.5	µg/l	U						
IR07MW20A1	0413M006	3/24/04	VOLATILES	DIBROMOCHLOROMETHANE	0.5	µg/l	U						
IR07MW20A1	0413M006	3/24/04	VOLATILES	DICHLORODIFLUOROMETHANE	0.5	µg/l	U						
IR07MW20A1	0413M006	3/24/04	VOLATILES	ETHYL BENZENE	0.5	µg/l	U						
IR07MW20A1	0413M006	3/24/04	VOLATILES	ISOPROPYLBENZENE	0.5	µg/l	U						
IR07MW20A1	0413M006	3/24/04	VOLATILES	METHYL ACETATE	0.5	µg/l	U	UJ7					
IR07MW20A1	0413M006	3/24/04	VOLATILES	METHYL tert-BUTYL ETHER	0.5	µg/l	U						
IR07MW20A1	0413M006	3/24/04	VOLATILES	METHYLENE CHLORIDE	0.5	µg/l	U						
IR07MW20A1	0413M006	3/24/04	VOLATILES	STYRENE	0.5	µg/l	U						
IR07MW20A1	0413M006	3/24/04	VOLATILES	TETRACHLOROETHENE	0.5	µg/l	U						
IR07MW20A1	0413M006	3/24/04	VOLATILES	TOLUENE	0.5	µg/l	U						
IR07MW20A1	0413M006	3/24/04	VOLATILES	trans-1,2-DICHLOROETHENE	0.5	µg/l	U						
IR07MW20A1	0413M006	3/24/04	VOLATILES	trans-1,3-DICHLOROPROPENE	0.5	µg/l	U						
IR07MW20A1	0413M006	3/24/04	VOLATILES	TRICHLOROETHENE	0.5	µg/l	U						
IR07MW20A1	0413M006	3/24/04	VOLATILES	TRICHLOROFLUOROMETHANE	0.5	µg/l	U						
IR07MW20A1	0413M006	3/24/04	VOLATILES	VINYL CHLORIDE	0.5	µg/l	U						
IR07MW20A1	0413M006	3/24/04	VOLATILES	XYLENES (TOTAL)	0.5	µg/l	U						
IR07MW21A1	0413M010	3/25/04	FUELS	DIESEL	50	µg/l	U						
IR07MW21A1	0413M010	3/25/04	FUELS	GASOLINE	20	µg/l	U						
IR07MW21A1	0413M010	3/25/04	FUELS	MOTOR OIL	500	µg/l	U	UJ7					
IR07MW21A1	0413M010	3/25/04	INORGANICS	HEXAVALENT CHROMIUM	20	µg/l	U						
IR07MW21A1	0413M010	3/25/04	INORGANICS	SALINITY (FROM CHLORIDE)	2	NONE	U						
IR07MW21A1	0413M010	3/25/04	INORGANICS	TOTAL DISSOLVED SOLIDS	1054000	µg/l							
IR07MW21A1	0413M010	3/25/04	INORGANICS	TOTAL SUSPENDED SOLIDS	10.0	mg/l	U						
IR07MW21A1	0413M010	3/25/04	METALS	ALUMINUM	200	µg/l	U						
IR07MW21A1	0413M010	3/25/04	METALS	ANTIMONY	3.3	µg/l	J	U1					
IR07MW21A1	0413M010	3/25/04	METALS	ARSENIC	3.3	µg/l	J	J					
IR07MW21A1	0413M010	3/25/04	METALS	BARIUM	75.2	µg/l	J	J4					
IR07MW21A1	0413M010	3/25/04	METALS	BERYLLIUM	5	µg/l	U						
IR07MW21A1	0413M010	3/25/04	METALS	CADMIUM	5	µg/l	U						
IR07MW21A1	0413M010	3/25/04	METALS	CALCIUM	95000	µg/l		J3					
IR07MW21A1	0413M010	3/25/04	METALS	CHROMIUM	10	µg/l	U						
IR07MW21A1	0413M010	3/25/04	METALS	COBALT	5.2	µg/l	J	J					
IR07MW21A1	0413M010	3/25/04	METALS	COPPER	25	µg/l	U						
IR07MW21A1	0413M010	3/25/04	METALS	IRON	125	µg/l							
IR07MW21A1	0413M010	3/25/04	METALS	LEAD	10	µg/l	U						
IR07MW21A1	0413M010	3/25/04	METALS	MAGNESIUM	75400	µg/l		J3					
IR07MW21A1	0413M010	3/25/04	METALS	MANGANESE	1170	µg/l							

SUMMARY OR ANALYTICAL RESULTS
Seventeeth Quarterly Groundwater Sampling Report - Parcel B
Hunters Point Shipyard
San Francisco, California

Well ID	Sample Number	Sample Date	Analytical Method	Analyte	Result	UNITS	Lab Qual	Valid Code	POC Trigger	SentinelTrigger	VOC Trigger	Utility Line Trigger	Other Well Trigger Level
IR07MW21A1	0413M010	3/25/04	METALS	MERCURY	0.071	µg/l	J	U1					
IR07MW21A1	0413M010	3/25/04	METALS	NICKEL	33.7	µg/l	J	J					
IR07MW21A1	0413M010	3/25/04	METALS	POTASSIUM	11100	µg/l		J3					
IR07MW21A1	0413M010	3/25/04	METALS	SELENIUM	4.7	µg/l	J	U1					
IR07MW21A1	0413M010	3/25/04	METALS	SILVER	10	µg/l	U						
IR07MW21A1	0413M010	3/25/04	METALS	SODIUM	136000	µg/l	E	CJ83					
IR07MW21A1	0413M010	3/25/04	METALS	SODIUM	137000	µg/l	D	J3					
IR07MW21A1	0413M010	3/25/04	METALS	THALLIUM	25	µg/l	U	UJ3					
IR07MW21A1	0413M010	3/25/04	METALS	VANADIUM	50	µg/l	U						
IR07MW21A1	0413M010	3/25/04	METALS	ZINC	60	µg/l	U						
IR07MW21A1	0413M010	3/25/04	VOLATILES	1,1,1-TRICHLOROETHANE	0.5	µg/l	U						
IR07MW21A1	0413M010	3/25/04	VOLATILES	1,1,2,2-TETRACHLOROETHANE	0.5	µg/l	U						
IR07MW21A1	0413M010	3/25/04	VOLATILES	1,1,2-TRICHLORO-1,2,2-TRIFLUOROETHANE	0.5	µg/l	U						
IR07MW21A1	0413M010	3/25/04	VOLATILES	1,1,2-TRICHLOROETHANE	0.5	µg/l	U						
IR07MW21A1	0413M010	3/25/04	VOLATILES	1,1-DICHLOROETHANE	0.5	µg/l	U						
IR07MW21A1	0413M010	3/25/04	VOLATILES	1,1-DICHLOROETHENE	0.5	µg/l	U						
IR07MW21A1	0413M010	3/25/04	VOLATILES	1,2,3-TRICHLOROBENZENE	0.5	µg/l	U						
IR07MW21A1	0413M010	3/25/04	VOLATILES	1,2,4-TRICHLOROBENZENE	0.5	µg/l	U						
IR07MW21A1	0413M010	3/25/04	VOLATILES	1,2-DIBROMO-3-CHLOROPROPANE	1	µg/l	U						
IR07MW21A1	0413M010	3/25/04	VOLATILES	1,2-DIBROMOETHANE	0.5	µg/l	U						
IR07MW21A1	0413M010	3/25/04	VOLATILES	1,2-DICHLOROBENZENE	0.5	µg/l	U						
IR07MW21A1	0413M010	3/25/04	VOLATILES	1,2-DICHLOROETHANE	0.14	µg/l	J						
IR07MW21A1	0413M010	3/25/04	VOLATILES	1,2-DICHLOROPROPANE	0.5	µg/l	U						
IR07MW21A1	0413M010	3/25/04	VOLATILES	1,3-DICHLOROBENZENE	0.5	µg/l	U						
IR07MW21A1	0413M010	3/25/04	VOLATILES	1,4-DICHLOROBENZENE	0.5	µg/l	U						
IR07MW21A1	0413M010	3/25/04	VOLATILES	2-BUTANONE	5	µg/l	U						
IR07MW21A1	0413M010	3/25/04	VOLATILES	2-HEXANONE	5	µg/l	U						
IR07MW21A1	0413M010	3/25/04	VOLATILES	4-METHYL-2-PENTANONE	5	µg/l	U						
IR07MW21A1	0413M010	3/25/04	VOLATILES	ACETONE	5	µg/l	U	UJ7					
IR07MW21A1	0413M010	3/25/04	VOLATILES	BENZENE	0.5	µg/l	U						
IR07MW21A1	0413M010	3/25/04	VOLATILES	BROMOCHLOROMETHANE	0.5	µg/l	U						
IR07MW21A1	0413M010	3/25/04	VOLATILES	BROMODICHLOROMETHANE	0.5	µg/l	U						
IR07MW21A1	0413M010	3/25/04	VOLATILES	BROMOFORM	0.5	µg/l	U						
IR07MW21A1	0413M010	3/25/04	VOLATILES	BROMOMETHANE	0.5	µg/l	U						
IR07MW21A1	0413M010	3/25/04	VOLATILES	CARBON DISULFIDE	0.5	µg/l	U						
IR07MW21A1	0413M010	3/25/04	VOLATILES	CARBON TETRACHLORIDE	0.5	µg/l	U						
IR07MW21A1	0413M010	3/25/04	VOLATILES	CHLOROBENZENE	0.5	µg/l	U						
IR07MW21A1	0413M010	3/25/04	VOLATILES	CHLOROETHANE	0.5	µg/l	U						
IR07MW21A1	0413M010	3/25/04	VOLATILES	CHLOROFORM	0.5	µg/l	U						
IR07MW21A1	0413M010	3/25/04	VOLATILES	CHLOROMETHANE	0.5	µg/l	U						
IR07MW21A1	0413M010	3/25/04	VOLATILES	cis-1,2-DICHLOROETHENE	0.5	µg/l	U						
IR07MW21A1	0413M010	3/25/04	VOLATILES	cis-1,3-DICHLOROPROPENE	0.5	µg/l	U						
IR07MW21A1	0413M010	3/25/04	VOLATILES	CYCLOHEXANE	0.5	µg/l	U						
IR07MW21A1	0413M010	3/25/04	VOLATILES	CYCLOHEXANE, METHYL-	0.5	µg/l	U	UJ7					
IR07MW21A1	0413M010	3/25/04	VOLATILES	DIBROMOCHLOROMETHANE	0.5	µg/l	U						
IR07MW21A1	0413M010	3/25/04	VOLATILES	DICHLORODIFLUOROMETHANE	0.5	µg/l	U						
IR07MW21A1	0413M010	3/25/04	VOLATILES	ETHYL BENZENE	0.5	µg/l	U						
IR07MW21A1	0413M010	3/25/04	VOLATILES	ISOPROPYLBENZENE	0.5	µg/l	U						
IR07MW21A1	0413M010	3/25/04	VOLATILES	METHYL ACETATE	0.5	µg/l	U						
IR07MW21A1	0413M010	3/25/04	VOLATILES	METHYL tert-BUTYL ETHER	0.5	µg/l	U						
IR07MW21A1	0413M010	3/25/04	VOLATILES	METHYLENE CHLORIDE	0.5	µg/l		U4					
IR07MW21A1	0413M010	3/25/04	VOLATILES	STYRENE	0.5	µg/l	U						
IR07MW21A1	0413M010	3/25/04	VOLATILES	TETRACHLOROETHENE	0.5	µg/l	U						
IR07MW21A1	0413M010	3/25/04	VOLATILES	TOLUENE	0.74	µg/l							
IR07MW21A1	0413M010	3/25/04	VOLATILES	trans-1,2-DICHLOROETHENE	0.5	µg/l	U						
IR07MW21A1	0413M010	3/25/04	VOLATILES	trans-1,3-DICHLOROPROPENE	0.5	µg/l	U						
IR07MW21A1	0413M010	3/25/04	VOLATILES	TRICHLOROETHENE	0.5	µg/l	U						
IR07MW21A1	0413M010	3/25/04	VOLATILES	TRICHLOROFLUOROMETHANE	0.5	µg/l	U						

SUMMARY OR ANALYTICAL RESULTS
Seventeeth Quarterly Groundwater Sampling Report - Parcel B
Hunters Point Shipyard
San Francisco, California

Well ID	Sample Number	Sample Date	Analytical Method	Analyte	Result	UNITS	Lab Qual	Valid Code	POC Trigger	SentinelTrigger	VOC Trigger	Utility Line Trigger	Other Well Trigger Level
IR07MW21A1	0413M010	3/25/04	VOLATILES	VINYL CHLORIDE	0.5	µg/l	U						
IR07MW21A1	0413M010	3/25/04	VOLATILES	XYLENES (TOTAL)	0.5	µg/l	U						
IR07MW23A	0413H005	3/24/04	FUELS	DIESEL	50	µg/l	U						
IR07MW23A	0413H005	3/24/04	FUELS	GASOLINE	20	µg/l	U						
IR07MW23A	0413H005	3/24/04	FUELS	MOTOR OIL	500	µg/l	U						
IR07MW23A	0413H005	3/24/04	INORGANICS	HEXAVALENT CHROMIUM	20	µg/l	U						
IR07MW23A	0413H005	3/24/04	INORGANICS	TOTAL SUSPENDED SOLIDS	10.0	mg/l	U						
IR07MW23A	0413H005	3/24/04	METALS	ALUMINUM	38.5	µg/l	J	J					
IR07MW23A	0413H005	3/24/04	METALS	ANTIMONY	2.7	µg/l	J	U1		5,000			
IR07MW23A	0413H005	3/24/04	METALS	ARSENIC	5.5	µg/l	J	J		360			
IR07MW23A	0413H005	3/24/04	METALS	BARIUM	92.6	µg/l	J	J		5,040			
IR07MW23A	0413H005	3/24/04	METALS	BERYLLIUM	5	µg/l	U			14			
IR07MW23A	0413H005	3/24/04	METALS	CADMIUM	5	µg/l	U			93			
IR07MW23A	0413H005	3/24/04	METALS	CALCIUM	77800	µg/l		J3					
IR07MW23A	0413H005	3/24/04	METALS	CHROMIUM	10	µg/l	U			157			
IR07MW23A	0413H005	3/24/04	METALS	COBALT	6.0	µg/l	J	J		208			
IR07MW23A	0413H005	3/24/04	METALS	COPPER	1.2	µg/l	J	U1		280			
IR07MW23A	0413H005	3/24/04	METALS	IRON	416	µg/l							
IR07MW23A	0413H005	3/24/04	METALS	LEAD	10	µg/l	U			144			
IR07MW23A	0413H005	3/24/04	METALS	MAGNESIUM	97200	µg/l		J3					
IR07MW23A	0413H005	3/24/04	METALS	MANGANESE	1910	µg/l				81,400			
IR07MW23A	0413H005	3/24/04	METALS	MERCURY	0.098	µg/l	J	U1		6			
IR07MW23A	0413H005	3/24/04	METALS	NICKEL	33.4	µg/l	J	J		865			
IR07MW23A	0413H005	3/24/04	METALS	POTASSIUM	9860	µg/l		J3					
IR07MW23A	0413H005	3/24/04	METALS	SELENIUM	5.3	µg/l	J	J					
IR07MW23A	0413H005	3/24/04	METALS	SILVER	10	µg/l	U			74.3			
IR07MW23A	0413H005	3/24/04	METALS	SODIUM	93400	µg/l	D	CJ3					
IR07MW23A	0413H005	3/24/04	METALS	SODIUM	93600	µg/l	E	J3					
IR07MW23A	0413H005	3/24/04	METALS	THALLIUM	25	µg/l	U	UJ3		130			
IR07MW23A	0413H005	3/24/04	METALS	VANADIUM	50	µg/l	U						
IR07MW23A	0413H005	3/24/04	METALS	ZINC	60	µg/l	U			810			
IR07MW23A	0413H005	3/24/04	VOLATILES	1,1,1-TRICHLOROETHANE	0.5	µg/l	U						
IR07MW23A	0413H005	3/24/04	VOLATILES	1,1,2,2-TETRACHLOROETHANE	0.5	µg/l	U						
IR07MW23A	0413H005	3/24/04	VOLATILES	1,1,2-TRICHLORO-1,2,2-TRIFLUOROETHANE	0.5	µg/l	U						
IR07MW23A	0413H005	3/24/04	VOLATILES	1,1,2-TRICHLOROETHANE	0.5	µg/l	U						
IR07MW23A	0413H005	3/24/04	VOLATILES	1,1-DICHLOROETHANE	0.5	µg/l	U						
IR07MW23A	0413H005	3/24/04	VOLATILES	1,1-DICHLOROETHENE	0.5	µg/l	U						
IR07MW23A	0413H005	3/24/04	VOLATILES	1,2,3-TRICHLOROBENZENE	0.5	µg/l	U						
IR07MW23A	0413H005	3/24/04	VOLATILES	1,2,4-TRICHLOROBENZENE	0.5	µg/l	U						
IR07MW23A	0413H005	3/24/04	VOLATILES	1,2-DIBROMO-3-CHLOROPROPANE	1	µg/l	U	UJ7					
IR07MW23A	0413H005	3/24/04	VOLATILES	1,2-DIBROMOETHANE	0.5	µg/l	U						
IR07MW23A	0413H005	3/24/04	VOLATILES	1,2-DICHLOROBENZENE	0.5	µg/l	U						
IR07MW23A	0413H005	3/24/04	VOLATILES	1,2-DICHLOROETHANE	0.5	µg/l	U						
IR07MW23A	0413H005	3/24/04	VOLATILES	1,2-DICHLOROPROPANE	0.5	µg/l	U						
IR07MW23A	0413H005	3/24/04	VOLATILES	1,3-DICHLOROBENZENE	0.5	µg/l	U						
IR07MW23A	0413H005	3/24/04	VOLATILES	1,4-DICHLOROBENZENE	0.5	µg/l	U						
IR07MW23A	0413H005	3/24/04	VOLATILES	2-BUTANONE	5	µg/l	U						
IR07MW23A	0413H005	3/24/04	VOLATILES	2-HEXANONE	5	µg/l	U						
IR07MW23A	0413H005	3/24/04	VOLATILES	4-METHYL-2-PENTANONE	5	µg/l	U						
IR07MW23A	0413H005	3/24/04	VOLATILES	ACETONE	5	µg/l	U	UJ7					
IR07MW23A	0413H005	3/24/04	VOLATILES	BENZENE	0.5	µg/l	U						
IR07MW23A	0413H005	3/24/04	VOLATILES	BROMOCHLOROMETHANE	0.5	µg/l	U						
IR07MW23A	0413H005	3/24/04	VOLATILES	BROMODICHLOROMETHANE	0.5	µg/l	U						
IR07MW23A	0413H005	3/24/04	VOLATILES	BROMOFORM	0.5	µg/l	U						
IR07MW23A	0413H005	3/24/04	VOLATILES	BROMOMETHANE	0.5	µg/l	U						
IR07MW23A	0413H005	3/24/04	VOLATILES	CARBON DISULFIDE	0.5	µg/l	U						
IR07MW23A	0413H005	3/24/04	VOLATILES	CARBON TETRACHLORIDE	0.5	µg/l	U						
IR07MW23A	0413H005	3/24/04	VOLATILES	CHLOROBENZENE	0.5	µg/l	U						

SUMMARY OR ANALYTICAL RESULTS
Seventeeth Quarterly Groundwater Sampling Report - Parcel B
Hunters Point Shipyard
San Francisco, California

Well ID	Sample Number	Sample Date	Analytical Method	Analyte	Result	UNITS	Lab Qual	Valid Code	POC Trigger	SentinelTrigger	VOC Trigger	Utility Line Trigger	Other Well Trigger Level
IR07MW23A	0413H005	3/24/04	VOLATILES	CHLOROETHANE	0.5	µg/l	U						
IR07MW23A	0413H005	3/24/04	VOLATILES	CHLOROFORM	0.5	µg/l	U						
IR07MW23A	0413H005	3/24/04	VOLATILES	CHLOROMETHANE	0.5	µg/l	U						
IR07MW23A	0413H005	3/24/04	VOLATILES	cis-1,2-DICHLOROETHENE	0.74	µg/l				85			
IR07MW23A	0413H005	3/24/04	VOLATILES	cis-1,3-DICHLOROPROPENE	0.5	µg/l	U						
IR07MW23A	0413H005	3/24/04	VOLATILES	CYCLOHEXANE	0.5	µg/l	U						
IR07MW23A	0413H005	3/24/04	VOLATILES	CYCLOHEXANE, METHYL-	0.5	µg/l	U						
IR07MW23A	0413H005	3/24/04	VOLATILES	DIBROMOCHLOROMETHANE	0.5	µg/l	U						
IR07MW23A	0413H005	3/24/04	VOLATILES	DICHLORODIFLUOROMETHANE	0.5	µg/l	U						
IR07MW23A	0413H005	3/24/04	VOLATILES	ETHYL BENZENE	0.5	µg/l	U						
IR07MW23A	0413H005	3/24/04	VOLATILES	ISOPROPYLBENZENE	0.5	µg/l	U						
IR07MW23A	0413H005	3/24/04	VOLATILES	METHYL ACETATE	0.5	µg/l	U	UJ7					
IR07MW23A	0413H005	3/24/04	VOLATILES	METHYL tert-BUTYL ETHER	0.24	µg/l	J	J					
IR07MW23A	0413H005	3/24/04	VOLATILES	METHYLENE CHLORIDE	0.5	µg/l	U						
IR07MW23A	0413H005	3/24/04	VOLATILES	STYRENE	0.5	µg/l	U						
IR07MW23A	0413H005	3/24/04	VOLATILES	TETRACHLOROETHENE	0.5	µg/l	U						
IR07MW23A	0413H005	3/24/04	VOLATILES	TOLUENE	0.5	µg/l	U						
IR07MW23A	0413H005	3/24/04	VOLATILES	trans-1,2-DICHLOROETHENE	0.5	µg/l	U			85			
IR07MW23A	0413H005	3/24/04	VOLATILES	trans-1,3-DICHLOROPROPENE	0.5	µg/l	U						
IR07MW23A	0413H005	3/24/04	VOLATILES	TRICHLOROETHENE	0.5	µg/l	U			114			
IR07MW23A	0413H005	3/24/04	VOLATILES	TRICHLOROFLUOROMETHANE	0.5	µg/l	U						
IR07MW23A	0413H005	3/24/04	VOLATILES	VINYL CHLORIDE	0.5	µg/l	U			55			
IR07MW23A	0413H005	3/24/04	VOLATILES	XYLENES (TOTAL)	0.5	µg/l	U						
IR07MW24A	0413H007	3/25/04	FUELS	DIESEL	50	µg/l	U						
IR07MW24A	0413H007	3/25/04	FUELS	GASOLINE	20	µg/l	U						
IR07MW24A	0413H007	3/25/04	FUELS	MOTOR OIL	500	µg/l	U	UJ7					
IR07MW24A	0413H007	3/25/04	INORGANICS	HEXAVALENT CHROMIUM	20	µg/l	U						
IR07MW24A	0413H007	3/25/04	INORGANICS	SALINITY (FROM CHLORIDE)	2	NONE	U						
IR07MW24A	0413H007	3/25/04	INORGANICS	TOTAL DISSOLVED SOLIDS	1188000	µg/l							
IR07MW24A	0413H007	3/25/04	INORGANICS	TOTAL SUSPENDED SOLIDS	19	mg/l							
IR07MW24A	0413H007	3/25/04	METALS	ALUMINUM	564	µg/l							
IR07MW24A	0413H007	3/25/04	METALS	ANTIMONY	10.1	µg/l	J	U1					
IR07MW24A	0413H007	3/25/04	METALS	ARSENIC	4.7	µg/l	J	J					
IR07MW24A	0413H007	3/25/04	METALS	BARIUM	123	µg/l	J	J4					
IR07MW24A	0413H007	3/25/04	METALS	BERYLLIUM	0.40	µg/l	J	U1					
IR07MW24A	0413H007	3/25/04	METALS	CADMIUM	5	µg/l	U						
IR07MW24A	0413H007	3/25/04	METALS	CALCIUM	118000	µg/l	E	CJ83					
IR07MW24A	0413H007	3/25/04	METALS	CALCIUM	126000	µg/l	D	J3					
IR07MW24A	0413H007	3/25/04	METALS	CHROMIUM	9.7	µg/l	J	J					
IR07MW24A	0413H007	3/25/04	METALS	COBALT	3.5	µg/l	J	J					
IR07MW24A	0413H007	3/25/04	METALS	COPPER	3.6	µg/l	J	U1					
IR07MW24A	0413H007	3/25/04	METALS	IRON	1030	µg/l							
IR07MW24A	0413H007	3/25/04	METALS	LEAD	10	µg/l	U						
IR07MW24A	0413H007	3/25/04	METALS	MAGNESIUM	76200	µg/l		J3					
IR07MW24A	0413H007	3/25/04	METALS	MANGANESE	982	µg/l							
IR07MW24A	0413H007	3/25/04	METALS	MERCURY	0.11	µg/l	J	U1					
IR07MW24A	0413H007	3/25/04	METALS	NICKEL	40.0	µg/l							
IR07MW24A	0413H007	3/25/04	METALS	POTASSIUM	12800	µg/l		J3					
IR07MW24A	0413H007	3/25/04	METALS	SELENIUM	5.5	µg/l	J	U1					
IR07MW24A	0413H007	3/25/04	METALS	SILVER	10	µg/l	U						
IR07MW24A	0413H007	3/25/04	METALS	SODIUM	174000	µg/l	E	CJ83					
IR07MW24A	0413H007	3/25/04	METALS	SODIUM	172000	µg/l	D	J3					
IR07MW24A	0413H007	3/25/04	METALS	THALLIUM	25	µg/l	U	UJ3					
IR07MW24A	0413H007	3/25/04	METALS	VANADIUM	3.1	µg/l	J	J					
IR07MW24A	0413H007	3/25/04	METALS	ZINC	60	µg/l	U						
IR07MW24A	0413H007	3/25/04	VOLATILES	1,1,1-TRICHLOROETHANE	0.5	µg/l	U						
IR07MW24A	0413H007	3/25/04	VOLATILES	1,1,2,2-TETRACHLOROETHANE	0.5	µg/l	U						
IR07MW24A	0413H007	3/25/04	VOLATILES	1,1,2-TRICHLORO-1,2,2-TRIFLUOROETHANE	0.5	µg/l	U						

SUMMARY OR ANALYTICAL RESULTS
Seventeeth Quarterly Groundwater Sampling Report - Parcel B
Hunters Point Shipyard
San Francisco, California

Well ID	Sample Number	Sample Date	Analytical Method	Analyte	Result	UNITS	Lab Qual	Valid Code	POC Trigger	SentinelTrigger	VOC Trigger	Utility Line Trigger	Other Well Trigger Level
IR07MW24A	0413H007	3/25/04	VOLATILES	1,1,2-TRICHLOROETHANE	0.5	µg/l	U						
IR07MW24A	0413H007	3/25/04	VOLATILES	1,1-DICHLOROETHANE	0.5	µg/l	U						
IR07MW24A	0413H007	3/25/04	VOLATILES	1,1-DICHLOROETHENE	0.5	µg/l	U						
IR07MW24A	0413H007	3/25/04	VOLATILES	1,2,3-TRICHLOROBENZENE	0.5	µg/l	U						
IR07MW24A	0413H007	3/25/04	VOLATILES	1,2,4-TRICHLOROBENZENE	0.5	µg/l	U						
IR07MW24A	0413H007	3/25/04	VOLATILES	1,2-DIBROMO-3-CHLOROPROPANE	1	µg/l	U						
IR07MW24A	0413H007	3/25/04	VOLATILES	1,2-DIBROMOETHANE	0.5	µg/l	U						
IR07MW24A	0413H007	3/25/04	VOLATILES	1,2-DICHLOROBENZENE	0.5	µg/l	U						
IR07MW24A	0413H007	3/25/04	VOLATILES	1,2-DICHLOROETHANE	0.5	µg/l	U						
IR07MW24A	0413H007	3/25/04	VOLATILES	1,2-DICHLOROPROPANE	0.5	µg/l	U						
IR07MW24A	0413H007	3/25/04	VOLATILES	1,3-DICHLOROBENZENE	0.5	µg/l	U						
IR07MW24A	0413H007	3/25/04	VOLATILES	1,4-DICHLOROBENZENE	0.5	µg/l	U						
IR07MW24A	0413H007	3/25/04	VOLATILES	2-BUTANONE	5	µg/l	U						
IR07MW24A	0413H007	3/25/04	VOLATILES	2-HEXANONE	5	µg/l	U						
IR07MW24A	0413H007	3/25/04	VOLATILES	4-METHYL-2-PENTANONE	5	µg/l	U						
IR07MW24A	0413H007	3/25/04	VOLATILES	ACETONE	5	µg/l	U						
IR07MW24A	0413H007	3/25/04	VOLATILES	BENZENE	0.5	µg/l	U						
IR07MW24A	0413H007	3/25/04	VOLATILES	BROMOCHLOROMETHANE	0.5	µg/l	U						
IR07MW24A	0413H007	3/25/04	VOLATILES	BROMODICHLOROMETHANE	0.5	µg/l	U						
IR07MW24A	0413H007	3/25/04	VOLATILES	BROMOFORM	0.5	µg/l	U						
IR07MW24A	0413H007	3/25/04	VOLATILES	BROMOMETHANE	0.5	µg/l	U						
IR07MW24A	0413H007	3/25/04	VOLATILES	CARBON DISULFIDE	0.5	µg/l	U						
IR07MW24A	0413H007	3/25/04	VOLATILES	CARBON TETRACHLORIDE	0.5	µg/l	U						
IR07MW24A	0413H007	3/25/04	VOLATILES	CHLOROBENZENE	0.5	µg/l	U						
IR07MW24A	0413H007	3/25/04	VOLATILES	CHLOROETHANE	0.5	µg/l	U						
IR07MW24A	0413H007	3/25/04	VOLATILES	CHLOROFORM	0.5	µg/l	U						
IR07MW24A	0413H007	3/25/04	VOLATILES	CHLOROMETHANE	0.5	µg/l	U						
IR07MW24A	0413H007	3/25/04	VOLATILES	cis-1,2-DICHLOROETHENE	0.5	µg/l	U						
IR07MW24A	0413H007	3/25/04	VOLATILES	cis-1,3-DICHLOROPROPENE	0.5	µg/l	U						
IR07MW24A	0413H007	3/25/04	VOLATILES	CYCLOHEXANE	0.5	µg/l	U						
IR07MW24A	0413H007	3/25/04	VOLATILES	CYCLOHEXANE, METHYL-	0.5	µg/l	U						
IR07MW24A	0413H007	3/25/04	VOLATILES	DIBROMOCHLOROMETHANE	0.5	µg/l	U						
IR07MW24A	0413H007	3/25/04	VOLATILES	DICHLORODIFLUOROMETHANE	0.5	µg/l	U						
IR07MW24A	0413H007	3/25/04	VOLATILES	ETHYL BENZENE	0.5	µg/l	U						
IR07MW24A	0413H007	3/25/04	VOLATILES	ISOPROPYLBENZENE	0.5	µg/l	U						
IR07MW24A	0413H007	3/25/04	VOLATILES	METHYL ACETATE	0.5	µg/l	U	UJ7					
IR07MW24A	0413H007	3/25/04	VOLATILES	METHYL tert-BUTYL ETHER	0.5	µg/l	U						
IR07MW24A	0413H007	3/25/04	VOLATILES	METHYLENE CHLORIDE	0.5	µg/l	U						
IR07MW24A	0413H007	3/25/04	VOLATILES	STYRENE	0.5	µg/l	U						
IR07MW24A	0413H007	3/25/04	VOLATILES	TETRACHLOROETHENE	0.5	µg/l	U						
IR07MW24A	0413H007	3/25/04	VOLATILES	TOLUENE	0.5	µg/l	U						
IR07MW24A	0413H007	3/25/04	VOLATILES	trans-1,2-DICHLOROETHENE	0.5	µg/l	U						
IR07MW24A	0413H007	3/25/04	VOLATILES	trans-1,3-DICHLOROPROPENE	0.5	µg/l	U						
IR07MW24A	0413H007	3/25/04	VOLATILES	TRICHLOROETHENE	0.5	µg/l	U						
IR07MW24A	0413H007	3/25/04	VOLATILES	TRICHLOROFLUOROMETHANE	0.5	µg/l	U						
IR07MW24A	0413H007	3/25/04	VOLATILES	VINYL CHLORIDE	0.5	µg/l	U						
IR07MW24A	0413H007	3/25/04	VOLATILES	XYLENES (TOTAL)	0.5	µg/l	U						
IR07MW25A	0413M012	3/26/04	FUELS	DIESEL	50	µg/l	U						
IR07MW25A	0413M012	3/26/04	FUELS	GASOLINE	20	µg/l	U						
IR07MW25A	0413M012	3/26/04	FUELS	MOTOR OIL	500	µg/l	U						
IR07MW25A	0413M012	3/26/04	INORGANICS	HEXAVALENT CHROMIUM	20	µg/l	U						
IR07MW25A	0413M012	3/26/04	INORGANICS	SALINITY (FROM CHLORIDE)	2	NONE	U						
IR07MW25A	0413M012	3/26/04	INORGANICS	TOTAL DISSOLVED SOLIDS	1262000	µg/l							
IR07MW25A	0413M012	3/26/04	INORGANICS	TOTAL SUSPENDED SOLIDS	10.0	mg/l	U						
IR07MW25A	0413M012	3/26/04	METALS	ALUMINUM	73.9	µg/l	J	U1					
IR07MW25A	0413M012	3/26/04	METALS	ANTIMONY	8.0	µg/l	J	U1					
IR07MW25A	0413M012	3/26/04	METALS	ARSENIC	9.8	µg/l	J	J					
IR07MW25A	0413M012	3/26/04	METALS	BARIUM	162	µg/l	J	J4					

SUMMARY OR ANALYTICAL RESULTS
Seventeeth Quarterly Groundwater Sampling Report - Parcel B
Hunters Point Shipyard
San Francisco, California

Well ID	Sample Number	Sample Date	Analytical Method	Analyte	Result	UNITS	Lab Qual	Valid Code	POC Trigger	SentinelTrigger	VOC Trigger	Utility Line Trigger	Other Well Trigger Level
IR07MW25A	0413M012	3/26/04	METALS	BERYLLIUM	0.24	µg/l	J	U1					
IR07MW25A	0413M012	3/26/04	METALS	CADMIUM	5	µg/l	U						
IR07MW25A	0413M012	3/26/04	METALS	CALCIUM	142000	µg/l	E	CJ83					
IR07MW25A	0413M012	3/26/04	METALS	CALCIUM	140000	µg/l	D	J3					
IR07MW25A	0413M012	3/26/04	METALS	CHROMIUM	10	µg/l	U						
IR07MW25A	0413M012	3/26/04	METALS	COBALT	5.3	µg/l	J	J					
IR07MW25A	0413M012	3/26/04	METALS	COPPER	25	µg/l	U						
IR07MW25A	0413M012	3/26/04	METALS	IRON	574	µg/l							
IR07MW25A	0413M012	3/26/04	METALS	LEAD	10	µg/l	U						
IR07MW25A	0413M012	3/26/04	METALS	MAGNESIUM	84300	µg/l		J3					
IR07MW25A	0413M012	3/26/04	METALS	MANGANESE	1790	µg/l							
IR07MW25A	0413M012	3/26/04	METALS	MERCURY	0.15	µg/l	J	U1					
IR07MW25A	0413M012	3/26/04	METALS	NICKEL	15.1	µg/l	J	J					
IR07MW25A	0413M012	3/26/04	METALS	POTASSIUM	17700	µg/l		J3					
IR07MW25A	0413M012	3/26/04	METALS	SELENIUM	6.2	µg/l	J	U1					
IR07MW25A	0413M012	3/26/04	METALS	SILVER	10	µg/l	U						
IR07MW25A	0413M012	3/26/04	METALS	SODIUM	231000	µg/l	E	CJ83					
IR07MW25A	0413M012	3/26/04	METALS	SODIUM	223000	µg/l	D	J3					
IR07MW25A	0413M012	3/26/04	METALS	THALLIUM	25	µg/l	U	UJ3					
IR07MW25A	0413M012	3/26/04	METALS	VANADIUM	50	µg/l	U						
IR07MW25A	0413M012	3/26/04	METALS	ZINC	60	µg/l	U						
IR07MW25A	0413M012	3/26/04	VOLATILES	1,1,1-TRICHLOROETHANE	0.5	µg/l	U						
IR07MW25A	0413M012	3/26/04	VOLATILES	1,1,2,2-TETRACHLOROETHANE	0.5	µg/l	U						
IR07MW25A	0413M012	3/26/04	VOLATILES	1,1,2-TRICHLORO-1,2,2-TRIFLUOROETHANE	0.5	µg/l	U						
IR07MW25A	0413M012	3/26/04	VOLATILES	1,1,2-TRICHLOROETHANE	0.5	µg/l	U						
IR07MW25A	0413M012	3/26/04	VOLATILES	1,1-DICHLOROETHANE	0.5	µg/l	U						
IR07MW25A	0413M012	3/26/04	VOLATILES	1,1-DICHLOROETHENE	0.5	µg/l	U						
IR07MW25A	0413M012	3/26/04	VOLATILES	1,2,3-TRICHLOROBENZENE	0.5	µg/l	U						
IR07MW25A	0413M012	3/26/04	VOLATILES	1,2,4-TRICHLOROBENZENE	0.5	µg/l	U						
IR07MW25A	0413M012	3/26/04	VOLATILES	1,2-DIBROMO-3-CHLOROPROPANE	1	µg/l	U						
IR07MW25A	0413M012	3/26/04	VOLATILES	1,2-DIBROMOETHANE	0.5	µg/l	U						
IR07MW25A	0413M012	3/26/04	VOLATILES	1,2-DICHLOROBENZENE	0.5	µg/l	U						
IR07MW25A	0413M012	3/26/04	VOLATILES	1,2-DICHLOROETHANE	0.5	µg/l	U						
IR07MW25A	0413M012	3/26/04	VOLATILES	1,2-DICHLOROPROPANE	0.5	µg/l	U						
IR07MW25A	0413M012	3/26/04	VOLATILES	1,3-DICHLOROBENZENE	0.5	µg/l	U						
IR07MW25A	0413M012	3/26/04	VOLATILES	1,4-DICHLOROBENZENE	0.5	µg/l	U						
IR07MW25A	0413M012	3/26/04	VOLATILES	2-BUTANONE	5	µg/l	U						
IR07MW25A	0413M012	3/26/04	VOLATILES	2-HEXANONE	5	µg/l	U						
IR07MW25A	0413M012	3/26/04	VOLATILES	4-METHYL-2-PENTANONE	5	µg/l	U						
IR07MW25A	0413M012	3/26/04	VOLATILES	ACETONE	5	µg/l	U						
IR07MW25A	0413M012	3/26/04	VOLATILES	BENZENE	0.5	µg/l	U						
IR07MW25A	0413M012	3/26/04	VOLATILES	BROMOCHLOROMETHANE	0.5	µg/l	U						
IR07MW25A	0413M012	3/26/04	VOLATILES	BROMODICHLOROMETHANE	0.5	µg/l	U						
IR07MW25A	0413M012	3/26/04	VOLATILES	BROMOFORM	0.5	µg/l	U						
IR07MW25A	0413M012	3/26/04	VOLATILES	BROMOMETHANE	0.5	µg/l	U						
IR07MW25A	0413M012	3/26/04	VOLATILES	CARBON DISULFIDE	0.5	µg/l	U						
IR07MW25A	0413M012	3/26/04	VOLATILES	CARBON TETRACHLORIDE	0.5	µg/l	U						
IR07MW25A	0413M012	3/26/04	VOLATILES	CHLOROBENZENE	0.5	µg/l	U						
IR07MW25A	0413M012	3/26/04	VOLATILES	CHLOROETHANE	0.5	µg/l	U						
IR07MW25A	0413M012	3/26/04	VOLATILES	CHLOROFORM	0.5	µg/l	U						
IR07MW25A	0413M012	3/26/04	VOLATILES	CHLOROMETHANE	0.5	µg/l	U						
IR07MW25A	0413M012	3/26/04	VOLATILES	cis-1,2-DICHLOROETHENE	0.5	µg/l	U						
IR07MW25A	0413M012	3/26/04	VOLATILES	cis-1,3-DICHLOROPROPENE	0.5	µg/l	U						
IR07MW25A	0413M012	3/26/04	VOLATILES	CYCLOHEXANE	0.5	µg/l	U						
IR07MW25A	0413M012	3/26/04	VOLATILES	CYCLOHEXANE, METHYL-	0.5	µg/l	U						
IR07MW25A	0413M012	3/26/04	VOLATILES	DIBROMOCHLOROMETHANE	0.5	µg/l	U						
IR07MW25A	0413M012	3/26/04	VOLATILES	DICHLORODIFLUOROMETHANE	0.5	µg/l	U						
IR07MW25A	0413M012	3/26/04	VOLATILES	ETHYL BENZENE	0.5	µg/l	U						

SUMMARY OR ANALYTICAL RESULTS
Seventeeth Quarterly Groundwater Sampling Report - Parcel B
Hunters Point Shipyard
San Francisco, California

Well ID	Sample Number	Sample Date	Analytical Method	Analyte	Result	UNITS	Lab Qual	Valid Code	POC Trigger	SentinelTrigger	VOC Trigger	Utility Line Trigger	Other Well Trigger Level
IR07MW25A	0413M012	3/26/04	VOLATILES	ISOPROPYLBENZENE	0.5	µg/l	U						
IR07MW25A	0413M012	3/26/04	VOLATILES	METHYL ACETATE	0.5	µg/l	U	UJ7					
IR07MW25A	0413M012	3/26/04	VOLATILES	METHYL tert-BUTYL ETHER	0.5	µg/l	U						
IR07MW25A	0413M012	3/26/04	VOLATILES	METHYLENE CHLORIDE	0.5	µg/l	U						
IR07MW25A	0413M012	3/26/04	VOLATILES	STYRENE	0.5	µg/l	U						
IR07MW25A	0413M012	3/26/04	VOLATILES	TETRACHLOROETHENE	0.5	µg/l	U						
IR07MW25A	0413M012	3/26/04	VOLATILES	TOLUENE	0.5	µg/l	U						
IR07MW25A	0413M012	3/26/04	VOLATILES	trans-1,2-DICHLOROETHENE	0.5	µg/l	U						
IR07MW25A	0413M012	3/26/04	VOLATILES	trans-1,3-DICHLOROPROPENE	0.5	µg/l	U						
IR07MW25A	0413M012	3/26/04	VOLATILES	TRICHLOROETHENE	0.5	µg/l	U						
IR07MW25A	0413M012	3/26/04	VOLATILES	TRICHLOROFLUOROMETHANE	0.5	µg/l	U						
IR07MW25A	0413M012	3/26/04	VOLATILES	VINYL CHLORIDE	0.5	µg/l	U						
IR07MW25A	0413M012	3/26/04	VOLATILES	XYLENES (TOTAL)	0.5	µg/l	U						
IR07MW26A	0414T002	3/29/04	FUELS	DIESEL	50	µg/l	U						
IR07MW26A	0414T002	3/29/04	FUELS	GASOLINE	20	µg/l	U						
IR07MW26A	0414T002	3/29/04	FUELS	MOTOR OIL	500	µg/l	U						
IR07MW26A	0414T002	3/29/04	INORGANICS	HEXAVALENT CHROMIUM	20	µg/l	U						
IR07MW26A	0414T002	3/29/04	INORGANICS	SALINITY (FROM CHLORIDE)	21.0	NONE							
IR07MW26A	0414T002	3/29/04	INORGANICS	TOTAL DISSOLVED SOLIDS	21950000	µg/l							
IR07MW26A	0414T002	3/29/04	INORGANICS	TOTAL SUSPENDED SOLIDS	10.0	mg/l	U						
IR07MW26A	0414T002	3/29/04	METALS	ALUMINUM	806	µg/l	J	J					
IR07MW26A	0414T002	3/29/04	METALS	ANTIMONY	24.3	µg/l	J	J9					
IR07MW26A	0414T002	3/29/04	METALS	ARSENIC	50	µg/l	U	R2					
IR07MW26A	0414T002	3/29/04	METALS	BARIUM	149	µg/l	J	J					
IR07MW26A	0414T002	3/29/04	METALS	BERYLLIUM	1.7	µg/l	J	J9					
IR07MW26A	0414T002	3/29/04	METALS	CADMIUM	25	µg/l	U						
IR07MW26A	0414T002	3/29/04	METALS	CALCIUM	321000	µg/l		J3					
IR07MW26A	0414T002	3/29/04	METALS	CHROMIUM	50	µg/l	U						
IR07MW26A	0414T002	3/29/04	METALS	COBALT	10.1	µg/l	J	J					
IR07MW26A	0414T002	3/29/04	METALS	COPPER	130	µg/l	U	UJ3					
IR07MW26A	0414T002	3/29/04	METALS	IRON	382	µg/l	J	U2					
IR07MW26A	0414T002	3/29/04	METALS	LEAD	50	µg/l	U						
IR07MW26A	0414T002	3/29/04	METALS	MAGNESIUM	726000	µg/l	E	CJ83					
IR07MW26A	0414T002	3/29/04	METALS	MAGNESIUM	790000	µg/l	D	J3					
IR07MW26A	0414T002	3/29/04	METALS	MANGANESE	1110	µg/l							
IR07MW26A	0414T002	3/29/04	METALS	MERCURY	0.2	µg/l	U						
IR07MW26A	0414T002	3/29/04	METALS	NICKEL	46.3	µg/l	J	U1					
IR07MW26A	0414T002	3/29/04	METALS	POTASSIUM	226000	µg/l	E	CJ83					
IR07MW26A	0414T002	3/29/04	METALS	POTASSIUM	216000	µg/l	D	J3					
IR07MW26A	0414T002	3/29/04	METALS	SELENIUM	44.5	µg/l	J	J					
IR07MW26A	0414T002	3/29/04	METALS	SILVER	50	µg/l	U						
IR07MW26A	0414T002	3/29/04	METALS	SODIUM	6720000	µg/l	E	CJ83					
IR07MW26A	0414T002	3/29/04	METALS	SODIUM	6540000	µg/l	D	J3					
IR07MW26A	0414T002	3/29/04	METALS	THALLIUM	163	µg/l		J9					
IR07MW26A	0414T002	3/29/04	METALS	VANADIUM	250	µg/l	U	UJ9					
IR07MW26A	0414T002	3/29/04	METALS	ZINC	300	µg/l	U	UJ3					
IR07MW26A	0414T002	3/29/04	VOLATILES	1,1,1-TRICHLOROETHANE	0.5	µg/l	U						
IR07MW26A	0414T002	3/29/04	VOLATILES	1,1,2,2-TETRACHLOROETHANE	0.5	µg/l	U						
IR07MW26A	0414T002	3/29/04	VOLATILES	1,1,2-TRICHLORO-1,2,2-TRIFLUOROETHANE	0.5	µg/l	U						
IR07MW26A	0414T002	3/29/04	VOLATILES	1,1,2-TRICHLOROETHANE	0.5	µg/l	U						
IR07MW26A	0414T002	3/29/04	VOLATILES	1,1-DICHLOROETHANE	0.5	µg/l	U						
IR07MW26A	0414T002	3/29/04	VOLATILES	1,1-DICHLOROETHENE	0.5	µg/l	U						
IR07MW26A	0414T002	3/29/04	VOLATILES	1,2,3-TRICHLOROBENZENE	0.5	µg/l	U						
IR07MW26A	0414T002	3/29/04	VOLATILES	1,2,4-TRICHLOROBENZENE	0.5	µg/l	U						
IR07MW26A	0414T002	3/29/04	VOLATILES	1,2-DIBROMO-3-CHLOROPROPANE	1	µg/l	U						
IR07MW26A	0414T002	3/29/04	VOLATILES	1,2-DIBROMOETHANE	0.5	µg/l	U						
IR07MW26A	0414T002	3/29/04	VOLATILES	1,2-DICHLOROBENZENE	0.5	µg/l	U						
IR07MW26A	0414T002	3/29/04	VOLATILES	1,2-DICHLOROETHANE	0.5	µg/l	U						

SUMMARY OR ANALYTICAL RESULTS
Seventeeth Quarterly Groundwater Sampling Report - Parcel B
Hunters Point Shipyard
San Francisco, California

Well ID	Sample Number	Sample Date	Analytical Method	Analyte	Result	UNITS	Lab Qual	Valid Code	POC Trigger	SentinelTrigger	VOC Trigger	Utility Line Trigger	Other Well Trigger Level
IR07MW26A	0414T002	3/29/04	VOLATILES	1,2-DICHLOROPROPANE	0.5	µg/l	U						
IR07MW26A	0414T002	3/29/04	VOLATILES	1,3-DICHLOROBENZENE	0.5	µg/l	U						
IR07MW26A	0414T002	3/29/04	VOLATILES	1,4-DICHLOROBENZENE	0.5	µg/l	U						
IR07MW26A	0414T002	3/29/04	VOLATILES	2-BUTANONE	5	µg/l	U						
IR07MW26A	0414T002	3/29/04	VOLATILES	2-HEXANONE	5	µg/l	U						
IR07MW26A	0414T002	3/29/04	VOLATILES	4-METHYL-2-PENTANONE	5	µg/l	U						
IR07MW26A	0414T002	3/29/04	VOLATILES	ACETONE	5	µg/l	U	UJ7					
IR07MW26A	0414T002	3/29/04	VOLATILES	BENZENE	0.5	µg/l	U						
IR07MW26A	0414T002	3/29/04	VOLATILES	BROMOCHLOROMETHANE	0.5	µg/l	U						
IR07MW26A	0414T002	3/29/04	VOLATILES	BROMODICHLOROMETHANE	0.5	µg/l	U						
IR07MW26A	0414T002	3/29/04	VOLATILES	BROMOFORM	0.5	µg/l	U						
IR07MW26A	0414T002	3/29/04	VOLATILES	BROMOMETHANE	0.5	µg/l	U						
IR07MW26A	0414T002	3/29/04	VOLATILES	CARBON DISULFIDE	0.5	µg/l	U						
IR07MW26A	0414T002	3/29/04	VOLATILES	CARBON TETRACHLORIDE	0.5	µg/l	U						
IR07MW26A	0414T002	3/29/04	VOLATILES	CHLOROBENZENE	0.5	µg/l	U						
IR07MW26A	0414T002	3/29/04	VOLATILES	CHLOROETHANE	0.5	µg/l	U						
IR07MW26A	0414T002	3/29/04	VOLATILES	CHLOROFORM	0.5	µg/l	U						
IR07MW26A	0414T002	3/29/04	VOLATILES	CHLOROMETHANE	0.5	µg/l	U						
IR07MW26A	0414T002	3/29/04	VOLATILES	cis-1,2-DICHLOROETHENE	0.5	µg/l	U						
IR07MW26A	0414T002	3/29/04	VOLATILES	cis-1,3-DICHLOROPROPENE	0.5	µg/l	U						
IR07MW26A	0414T002	3/29/04	VOLATILES	CYCLOHEXANE	0.5	µg/l	U						
IR07MW26A	0414T002	3/29/04	VOLATILES	CYCLOHEXANE, METHYL-	0.5	µg/l	U						
IR07MW26A	0414T002	3/29/04	VOLATILES	DIBROMOCHLOROMETHANE	0.5	µg/l	U						
IR07MW26A	0414T002	3/29/04	VOLATILES	DICHLORODIFLUOROMETHANE	0.5	µg/l	U						
IR07MW26A	0414T002	3/29/04	VOLATILES	ETHYL BENZENE	0.5	µg/l	U						
IR07MW26A	0414T002	3/29/04	VOLATILES	ISOPROPYLBENZENE	0.5	µg/l	U						
IR07MW26A	0414T002	3/29/04	VOLATILES	METHYL ACETATE	0.5	µg/l	U						
IR07MW26A	0414T002	3/29/04	VOLATILES	METHYL tert-BUTYL ETHER	0.5	µg/l	U						
IR07MW26A	0414T002	3/29/04	VOLATILES	METHYLENE CHLORIDE	0.5	µg/l	U						
IR07MW26A	0414T002	3/29/04	VOLATILES	STYRENE	0.5	µg/l	U						
IR07MW26A	0414T002	3/29/04	VOLATILES	TETRACHLOROETHENE	0.5	µg/l	U						
IR07MW26A	0414T002	3/29/04	VOLATILES	TOLUENE	0.5	µg/l	U						
IR07MW26A	0414T002	3/29/04	VOLATILES	trans-1,2-DICHLOROETHENE	0.5	µg/l	U						
IR07MW26A	0414T002	3/29/04	VOLATILES	trans-1,3-DICHLOROPROPENE	0.5	µg/l	U						
IR07MW26A	0414T002	3/29/04	VOLATILES	TRICHLOROETHENE	0.5	µg/l	U						
IR07MW26A	0414T002	3/29/04	VOLATILES	TRICHLOROFLUOROMETHANE	0.5	µg/l	U						
IR07MW26A	0414T002	3/29/04	VOLATILES	VINYL CHLORIDE	0.5	µg/l	U						
IR07MW26A	0414T002	3/29/04	VOLATILES	XYLENES (TOTAL)	0.5	µg/l	U						
IR07MW27A	0413M008	3/24/04	FUELS	DIESEL	470	µg/l	T1M						
IR07MW27A	0413M008	3/24/04	FUELS	GASOLINE	27	µg/l	JG4						
IR07MW27A	0413M008	3/24/04	FUELS	MOTOR OIL	500	µg/l	U						
IR07MW27A	0413M008	3/24/04	INORGANICS	HEXAVALENT CHROMIUM	20	µg/l	U						
IR07MW27A	0413M008	3/24/04	INORGANICS	TOTAL SUSPENDED SOLIDS	10.0	mg/l	U						
IR07MW27A	0413M008	3/24/04	METALS	ALUMINUM	77.5	µg/l	J	U1					
IR07MW27A	0413M008	3/24/04	METALS	ANTIMONY	13.4	µg/l	J	J		5,000			
IR07MW27A	0413M008	3/24/04	METALS	ARSENIC	32.0	µg/l				360			
IR07MW27A	0413M008	3/24/04	METALS	BARIUM	123	µg/l	J	J		5,040			
IR07MW27A	0413M008	3/24/04	METALS	BERYLLIUM	5	µg/l	U			14			
IR07MW27A	0413M008	3/24/04	METALS	CADMIUM	5	µg/l	U			93			
IR07MW27A	0413M008	3/24/04	METALS	CALCIUM	164000	µg/l	E	CJ83					
IR07MW27A	0413M008	3/24/04	METALS	CALCIUM	160000	µg/l	D	J3					
IR07MW27A	0413M008	3/24/04	METALS	CHROMIUM	10	µg/l	U			157			
IR07MW27A	0413M008	3/24/04	METALS	COBALT	4.8	µg/l	J	J		208			
IR07MW27A	0413M008	3/24/04	METALS	COPPER	25	µg/l	U			280			
IR07MW27A	0413M008	3/24/04	METALS	IRON	2320	µg/l							
IR07MW27A	0413M008	3/24/04	METALS	LEAD	10	µg/l	U			144			
IR07MW27A	0413M008	3/24/04	METALS	MAGNESIUM	148000	µg/l	E	CJ83					
IR07MW27A	0413M008	3/24/04	METALS	MAGNESIUM	138000	µg/l	D	J3					

SUMMARY OR ANALYTICAL RESULTS
Seventeeth Quarterly Groundwater Sampling Report - Parcel B
Hunters Point Shipyard
San Francisco, California

Well ID	Sample Number	Sample Date	Analytical Method	Analyte	Result	UNITS	Lab Qual	Valid Code	POC Trigger	SentinelTrigger	VOC Trigger	Utility Line Trigger	Other Well Trigger Level
IR07MW27A	0413M008	3/24/04	METALS	MANGANESE	4950	µg/l	E	CJ83		81,400			
IR07MW27A	0413M008	3/24/04	METALS	MANGANESE	4810	µg/l	D			81,400			
IR07MW27A	0413M008	3/24/04	METALS	MERCURY	0.16	µg/l	J	U1		6			
IR07MW27A	0413M008	3/24/04	METALS	NICKEL	43.9	µg/l				965			
IR07MW27A	0413M008	3/24/04	METALS	POTASSIUM	7560	µg/l		J3					
IR07MW27A	0413M008	3/24/04	METALS	SELENIUM	4.6	µg/l	J	U1					
IR07MW27A	0413M008	3/24/04	METALS	SILVER	10	µg/l	U			74.3			
IR07MW27A	0413M008	3/24/04	METALS	SODIUM	394000	µg/l	E	CJ83					
IR07MW27A	0413M008	3/24/04	METALS	SODIUM	354000	µg/l	D	J3					
IR07MW27A	0413M008	3/24/04	METALS	THALLIUM	25	µg/l	U	UJ3		130			
IR07MW27A	0413M008	3/24/04	METALS	VANADIUM	4.1	µg/l	J	J					
IR07MW27A	0413M008	3/24/04	METALS	ZINC	60	µg/l	U			810			
IR07MW27A	0413M008	3/24/04	PESTICIDES	4,4'-DDD	0.02	µg/l	U	UJ8					
IR07MW27A	0413M008	3/24/04	PESTICIDES	4,4'-DDE	0.02	µg/l	U	UJ8					
IR07MW27A	0413M008	3/24/04	PESTICIDES	4,4'-DDT	0.02	µg/l	U	UJ8					
IR07MW27A	0413M008	3/24/04	PESTICIDES	ALDRIN	0.01	µg/l	U	UJ8					
IR07MW27A	0413M008	3/24/04	PESTICIDES	alpha-BHC	0.01	µg/l	U	UJ8					
IR07MW27A	0413M008	3/24/04	PESTICIDES	alpha-CHLORDANE	0.01	µg/l	U	UJ8					
IR07MW27A	0413M008	3/24/04	PESTICIDES	AROCLOR-1016	0.2	µg/l	U	UJ8		2			
IR07MW27A	0413M008	3/24/04	PESTICIDES	AROCLOR-1221	0.4	µg/l	U	UJ8		2			
IR07MW27A	0413M008	3/24/04	PESTICIDES	AROCLOR-1232	0.2	µg/l	U	UJ8		2			
IR07MW27A	0413M008	3/24/04	PESTICIDES	AROCLOR-1242	0.2	µg/l	U	UJ8		2			
IR07MW27A	0413M008	3/24/04	PESTICIDES	AROCLOR-1248	0.2	µg/l	U	UJ8		2			
IR07MW27A	0413M008	3/24/04	PESTICIDES	AROCLOR-1254	0.2	µg/l	U	UJ8		2			
IR07MW27A	0413M008	3/24/04	PESTICIDES	AROCLOR-1260	0.2	µg/l	U	UJ8		2			
IR07MW27A	0413M008	3/24/04	PESTICIDES	beta-BHC	0.01	µg/l	U	UJ87					
IR07MW27A	0413M008	3/24/04	PESTICIDES	delta-BHC	0.01	µg/l	U	UJ8					
IR07MW27A	0413M008	3/24/04	PESTICIDES	DIELDRIN	0.02	µg/l	U	UJ8					
IR07MW27A	0413M008	3/24/04	PESTICIDES	ENDOSULFAN I	0.01	µg/l	U	UJ8					
IR07MW27A	0413M008	3/24/04	PESTICIDES	ENDOSULFAN II	0.02	µg/l	U	UJ8					
IR07MW27A	0413M008	3/24/04	PESTICIDES	ENDOSULFAN SULFATE	0.02	µg/l	U	UJ8					
IR07MW27A	0413M008	3/24/04	PESTICIDES	ENDRIN	0.02	µg/l	U	UJ8					
IR07MW27A	0413M008	3/24/04	PESTICIDES	ENDRIN ALDEHYDE	0.02	µg/l	U	UJ87					
IR07MW27A	0413M008	3/24/04	PESTICIDES	ENDRIN KETONE	0.02	µg/l	U	UJ8					
IR07MW27A	0413M008	3/24/04	PESTICIDES	gamma-BHC (LINDANE)	0.01	µg/l	U	UJ8					
IR07MW27A	0413M008	3/24/04	PESTICIDES	gamma-CHLORDANE	0.01	µg/l	U	UJ8					
IR07MW27A	0413M008	3/24/04	PESTICIDES	HEPTACHLOR	0.01	µg/l	U	UJ8					
IR07MW27A	0413M008	3/24/04	PESTICIDES	HEPTACHLOR EPOXIDE	0.01	µg/l	U	UJ8					
IR07MW27A	0413M008	3/24/04	PESTICIDES	METHOXYCHLOR	0.1	µg/l	U	UJ8					
IR07MW27A	0413M008	3/24/04	PESTICIDES	TOXAPHENE	1	µg/l	U	UJ8					
IR07MW27A	0413M008	3/24/04	SEMI-VOLATILES	1,1'-BIPHENYL	10	µg/l	U						
IR07MW27A	0413M008	3/24/04	SEMI-VOLATILES	2,4,5-TRICHLOROPHENOL	25	µg/l	U						
IR07MW27A	0413M008	3/24/04	SEMI-VOLATILES	2,4,6-TRICHLOROPHENOL	10	µg/l	U						
IR07MW27A	0413M008	3/24/04	SEMI-VOLATILES	2,4-DICHLOROPHENOL	10	µg/l	U						
IR07MW27A	0413M008	3/24/04	SEMI-VOLATILES	2,4-DIMETHYLPHENOL	10	µg/l	U						
IR07MW27A	0413M008	3/24/04	SEMI-VOLATILES	2,4-DINITROPHENOL	25	µg/l	U						
IR07MW27A	0413M008	3/24/04	SEMI-VOLATILES	2,4-DINITROTOLUENE	10	µg/l	U						
IR07MW27A	0413M008	3/24/04	SEMI-VOLATILES	2,6-DINITROTOLUENE	10	µg/l	U						
IR07MW27A	0413M008	3/24/04	SEMI-VOLATILES	2-CHLORONAPHTHALENE	10	µg/l	U						
IR07MW27A	0413M008	3/24/04	SEMI-VOLATILES	2-CHLOROPHENOL	10	µg/l	U						
IR07MW27A	0413M008	3/24/04	SEMI-VOLATILES	2-METHYLNAPHTHALENE	10	µg/l	U						
IR07MW27A	0413M008	3/24/04	SEMI-VOLATILES	2-METHYLPHENOL	10	µg/l	U						
IR07MW27A	0413M008	3/24/04	SEMI-VOLATILES	2-NITROANILINE	25	µg/l	U						
IR07MW27A	0413M008	3/24/04	SEMI-VOLATILES	2-NITROPHENOL	10	µg/l	U						
IR07MW27A	0413M008	3/24/04	SEMI-VOLATILES	3,3'-DICHLOROBENZIDINE	10	µg/l	U						
IR07MW27A	0413M008	3/24/04	SEMI-VOLATILES	3-NITROANILINE	25	µg/l	U						
IR07MW27A	0413M008	3/24/04	SEMI-VOLATILES	4,6-DINITRO-2-METHYLPHENOL	25	µg/l	U						
IR07MW27A	0413M008	3/24/04	SEMI-VOLATILES	4-BROMOPHENYL PHENYL ETHER	10	µg/l	U						

SUMMARY OR ANALYTICAL RESULTS
Seventeeth Quarterly Groundwater Sampling Report - Parcel B
Hunters Point Shipyard
San Francisco, California

Well ID	Sample Number	Sample Date	Analytical Method	Analyte	Result	UNITS	Lab Qual	Valid Code	POC Trigger	SentinelTrigger	VOC Trigger	Utility Line Trigger	Other Well Trigger Level
IR07MW27A	0413M008	3/24/04	SEMI-VOLATILES	4-CHLORO-3-METHYLPHENOL	10	µg/l	U						
IR07MW27A	0413M008	3/24/04	SEMI-VOLATILES	4-CHLOROANILINE	10	µg/l	U						
IR07MW27A	0413M008	3/24/04	SEMI-VOLATILES	4-CHLOROPHENYL PHENYL ETHER	10	µg/l	U						
IR07MW27A	0413M008	3/24/04	SEMI-VOLATILES	4-METHYLPHENOL	10	µg/l	U						
IR07MW27A	0413M008	3/24/04	SEMI-VOLATILES	4-NITROANILINE	25	µg/l	U						
IR07MW27A	0413M008	3/24/04	SEMI-VOLATILES	4-NITROPHENOL	25	µg/l	U						
IR07MW27A	0413M008	3/24/04	SEMI-VOLATILES	ACENAPHTHENE	10	µg/l	U			3,000			
IR07MW27A	0413M008	3/24/04	SEMI-VOLATILES	ACENAPHTHYLENE	10	µg/l	U			3,000			
IR07MW27A	0413M008	3/24/04	SEMI-VOLATILES	ACETOPHENONE	10	µg/l	U						
IR07MW27A	0413M008	3/24/04	SEMI-VOLATILES	ANTHRACENE	10	µg/l	U			3,000			
IR07MW27A	0413M008	3/24/04	SEMI-VOLATILES	ATRAZINE	10	µg/l	U						
IR07MW27A	0413M008	3/24/04	SEMI-VOLATILES	BENZ(a)ANTHRACENE	10	µg/l	U			3,000			
IR07MW27A	0413M008	3/24/04	SEMI-VOLATILES	BENZALDEHYDE	10	µg/l	U						
IR07MW27A	0413M008	3/24/04	SEMI-VOLATILES	BENZO(a)PYRENE	10	µg/l	U			3,000			
IR07MW27A	0413M008	3/24/04	SEMI-VOLATILES	BENZO(b)FLUORANTHENE	10	µg/l	U			3,000			
IR07MW27A	0413M008	3/24/04	SEMI-VOLATILES	BENZO(ghi)PERYLENE	10	µg/l	U			3,000			
IR07MW27A	0413M008	3/24/04	SEMI-VOLATILES	BENZO(k)FLUORANTHENE	10	µg/l	U			3,000			
IR07MW27A	0413M008	3/24/04	SEMI-VOLATILES	BIS(2-CHLOROETHOXY)METHANE	10	µg/l	U						
IR07MW27A	0413M008	3/24/04	SEMI-VOLATILES	BIS(2-CHLOROETHYL)ETHER	10	µg/l	U						
IR07MW27A	0413M008	3/24/04	SEMI-VOLATILES	BIS(2-ETHYLHEXYL)PHTHALATE	10	µg/l	U						
IR07MW27A	0413M008	3/24/04	SEMI-VOLATILES	BUTYL BENZYL PHTHALATE	10	µg/l	U						
IR07MW27A	0413M008	3/24/04	SEMI-VOLATILES	CAPROLACTAM	4.7	µg/l	J	J					
IR07MW27A	0413M008	3/24/04	SEMI-VOLATILES	CARBAZOLE	10	µg/l	U						
IR07MW27A	0413M008	3/24/04	SEMI-VOLATILES	CHRYSENE	10	µg/l	U						
IR07MW27A	0413M008	3/24/04	SEMI-VOLATILES	DIBENZ(a,h)ANTHRACENE	10	µg/l	U			3,000			
IR07MW27A	0413M008	3/24/04	SEMI-VOLATILES	DIBENZOFURAN	10	µg/l	U						
IR07MW27A	0413M008	3/24/04	SEMI-VOLATILES	DIETHYL PHTHALATE	10	µg/l		U4					
IR07MW27A	0413M008	3/24/04	SEMI-VOLATILES	DIMETHYL PHTHALATE	10	µg/l	U						
IR07MW27A	0413M008	3/24/04	SEMI-VOLATILES	DI-n-BUTYL PHTHALATE	10	µg/l	U						
IR07MW27A	0413M008	3/24/04	SEMI-VOLATILES	DI-n-OCTYL PHTHALATE	10	µg/l	U						
IR07MW27A	0413M008	3/24/04	SEMI-VOLATILES	FLUORANTHENE	10	µg/l	U			3,000			
IR07MW27A	0413M008	3/24/04	SEMI-VOLATILES	FLUORENE	10	µg/l	U			3,000			
IR07MW27A	0413M008	3/24/04	SEMI-VOLATILES	HEXACHLOROBENZENE	10	µg/l	U						
IR07MW27A	0413M008	3/24/04	SEMI-VOLATILES	HEXACHLOROBUTADIENE	10	µg/l	U						
IR07MW27A	0413M008	3/24/04	SEMI-VOLATILES	HEXACHLOROCYCLOPENTADIENE	10	µg/l	U						
IR07MW27A	0413M008	3/24/04	SEMI-VOLATILES	HEXACHLOROETHANE	10	µg/l	U						
IR07MW27A	0413M008	3/24/04	SEMI-VOLATILES	INDENO(1,2,3-cd)PYRENE	10	µg/l	U			3,000			
IR07MW27A	0413M008	3/24/04	SEMI-VOLATILES	ISOPHORONE	10	µg/l	U						
IR07MW27A	0413M008	3/24/04	SEMI-VOLATILES	NAPHTHALENE	10	µg/l	U			3,000			
IR07MW27A	0413M008	3/24/04	SEMI-VOLATILES	NITROBENZENE	10	µg/l	U						
IR07MW27A	0413M008	3/24/04	SEMI-VOLATILES	N-NITROSODI-n-PROPYLAMINE	10	µg/l	U						
IR07MW27A	0413M008	3/24/04	SEMI-VOLATILES	N-NITROSODIPHENYLAMINE	10	µg/l	U						
IR07MW27A	0413M008	3/24/04	SEMI-VOLATILES	PENTACHLOROPHENOL	25	µg/l	U						
IR07MW27A	0413M008	3/24/04	SEMI-VOLATILES	PHENANTHRENE	10	µg/l	U			3,000			
IR07MW27A	0413M008	3/24/04	SEMI-VOLATILES	PHENOL	10	µg/l	U						
IR07MW27A	0413M008	3/24/04	SEMI-VOLATILES	PROPANE, 2,2'-OXYBIS[1-CHLORO-	10	µg/l	U						
IR07MW27A	0413M008	3/24/04	SEMI-VOLATILES	PYRENE	10	µg/l	U						
IR07MW27A	0413M008	3/24/04	VOLATILES	1,1,1-TRICHLOROETHANE	0.5	µg/l	U						
IR07MW27A	0413M008	3/24/04	VOLATILES	1,1,2,2-TETRACHLOROETHANE	0.5	µg/l	U						
IR07MW27A	0413M008	3/24/04	VOLATILES	1,1,2-TRICHLORO-1,2,2-TRIFLUOROETHANE	0.5	µg/l	U						
IR07MW27A	0413M008	3/24/04	VOLATILES	1,1,2-TRICHLOROETHANE	0.5	µg/l	U						
IR07MW27A	0413M008	3/24/04	VOLATILES	1,1-DICHLOROETHANE	0.36	µg/l	J	J					
IR07MW27A	0413M008	3/24/04	VOLATILES	1,1-DICHLOROETHENE	0.5	µg/l	U						
IR07MW27A	0413M008	3/24/04	VOLATILES	1,2,3-TRICHLOROBENZENE	0.5	µg/l	U						
IR07MW27A	0413M008	3/24/04	VOLATILES	1,2,4-TRICHLOROBENZENE	0.5	µg/l	U						
IR07MW27A	0413M008	3/24/04	VOLATILES	1,2-DIBROMO-3-CHLOROPROPANE	1	µg/l	U	UJ7					
IR07MW27A	0413M008	3/24/04	VOLATILES	1,2-DIBROMOETHANE	0.5	µg/l	U						
IR07MW27A	0413M008	3/24/04	VOLATILES	1,2-DICHLOROBENZENE	0.5	µg/l	U						

SUMMARY OR ANALYTICAL RESULTS
Seventeeth Quarterly Groundwater Sampling Report - Parcel B
Hunters Point Shipyard
San Francisco, California

Well ID	Sample Number	Sample Date	Analytical Method	Analyte	Result	UNITS	Lab Qual	Valid Code	POC Trigger	SentinelTrigger	VOC Trigger	Utility Line Trigger	Other Well Trigger Level
IR07MW27A	0413M008	3/24/04	VOLATILES	1,2-DICHLOROETHANE	0.5	µg/l	U						
IR07MW27A	0413M008	3/24/04	VOLATILES	1,2-DICHLOROPROPANE	0.5	µg/l	U						
IR07MW27A	0413M008	3/24/04	VOLATILES	1,3-DICHLOROBENZENE	0.5	µg/l	U						
IR07MW27A	0413M008	3/24/04	VOLATILES	1,4-DICHLOROBENZENE	0.5	µg/l	U						
IR07MW27A	0413M008	3/24/04	VOLATILES	2-BUTANONE	5	µg/l	U						
IR07MW27A	0413M008	3/24/04	VOLATILES	2-HEXANONE	5	µg/l	U						
IR07MW27A	0413M008	3/24/04	VOLATILES	4-METHYL-2-PENTANONE	5	µg/l	U						
IR07MW27A	0413M008	3/24/04	VOLATILES	ACETONE	5	µg/l	U	UJ7					
IR07MW27A	0413M008	3/24/04	VOLATILES	BENZENE	0.5	µg/l	U						
IR07MW27A	0413M008	3/24/04	VOLATILES	BROMOCHLOROMETHANE	0.5	µg/l	U						
IR07MW27A	0413M008	3/24/04	VOLATILES	BROMODICHLOROMETHANE	0.5	µg/l	U						
IR07MW27A	0413M008	3/24/04	VOLATILES	BROMOFORM	0.5	µg/l	U						
IR07MW27A	0413M008	3/24/04	VOLATILES	BROMOMETHANE	0.5	µg/l	U						
IR07MW27A	0413M008	3/24/04	VOLATILES	CARBON DISULFIDE	0.5	µg/l	U						
IR07MW27A	0413M008	3/24/04	VOLATILES	CARBON TETRACHLORIDE	0.5	µg/l	U						
IR07MW27A	0413M008	3/24/04	VOLATILES	CHLOROBENZENE	0.5	µg/l	U						
IR07MW27A	0413M008	3/24/04	VOLATILES	CHLOROETHANE	0.5	µg/l	U						
IR07MW27A	0413M008	3/24/04	VOLATILES	CHLOROFORM	0.5	µg/l	U						
IR07MW27A	0413M008	3/24/04	VOLATILES	CHLOROMETHANE	0.5	µg/l	U						
IR07MW27A	0413M008	3/24/04	VOLATILES	cis-1,2-DICHLOROETHENE	0.5	µg/l	U			85			
IR07MW27A	0413M008	3/24/04	VOLATILES	cis-1,3-DICHLOROPROPENE	0.5	µg/l	U						
IR07MW27A	0413M008	3/24/04	VOLATILES	CYCLOHEXANE	0.5	µg/l	U						
IR07MW27A	0413M008	3/24/04	VOLATILES	CYCLOHEXANE; METHYL-	0.5	µg/l	U						
IR07MW27A	0413M008	3/24/04	VOLATILES	DIBROMOCHLOROMETHANE	0.5	µg/l	U						
IR07MW27A	0413M008	3/24/04	VOLATILES	DICHLORODIFLUOROMETHANE	0.5	µg/l	U						
IR07MW27A	0413M008	3/24/04	VOLATILES	ETHYL BENZENE	0.5	µg/l	U						
IR07MW27A	0413M008	3/24/04	VOLATILES	ISOPROPYLBENZENE	0.5	µg/l	U						
IR07MW27A	0413M008	3/24/04	VOLATILES	METHYL ACETATE	0.5	µg/l	U	UJ7					
IR07MW27A	0413M008	3/24/04	VOLATILES	METHYL tert-BUTYL ETHER	0.5	µg/l	U						
IR07MW27A	0413M008	3/24/04	VOLATILES	METHYLENE CHLORIDE	0.5	µg/l	U						
IR07MW27A	0413M008	3/24/04	VOLATILES	STYRENE	0.5	µg/l	U						
IR07MW27A	0413M008	3/24/04	VOLATILES	TETRACHLOROETHENE	0.5	µg/l	U						
IR07MW27A	0413M008	3/24/04	VOLATILES	TOLUENE	0.5	µg/l	U						
IR07MW27A	0413M008	3/24/04	VOLATILES	trans-1,2-DICHLOROETHENE	0.5	µg/l	U			85			
IR07MW27A	0413M008	3/24/04	VOLATILES	trans-1,3-DICHLOROPROPENE	0.5	µg/l	U						
IR07MW27A	0413M008	3/24/04	VOLATILES	TRICHLOROETHENE	0.5	µg/l	U			114			
IR07MW27A	0413M008	3/24/04	VOLATILES	TRICHLOROFLUOROMETHANE	0.5	µg/l	U						
IR07MW27A	0413M008	3/24/04	VOLATILES	VINYL CHLORIDE	0.5	µg/l	U			55			
IR07MW27A	0413M008	3/24/04	VOLATILES	XYLENES (TOTAL)	0.5	µg/l	U						
IR07MW28A	0414M016	3/30/04	FUELS	DIESEL	50	µg/l	U						
IR07MW28A	0414M016	3/30/04	FUELS	GASOLINE	20	µg/l	U						
IR07MW28A	0414M016	3/30/04	FUELS	MOTOR OIL	500	µg/l	U						
IR07MW28A	0414M016	3/30/04	INORGANICS	HEXAVALENT CHROMIUM	20	µg/l	U						
IR07MW28A	0414M016	3/30/04	INORGANICS	TOTAL SUSPENDED SOLIDS	10.0	mg/l	U						
IR07MW28A	0414M016	3/30/04	METALS	ALUMINUM	200	µg/l	U						
IR07MW28A	0414M016	3/30/04	METALS	ANTIMONY	7.2	µg/l	J	U1	500				
IR07MW28A	0414M016	3/30/04	METALS	ARSENIC	10	µg/l	U	R2	36				
IR07MW28A	0414M016	3/30/04	METALS	BARIUM	159	µg/l	J	J	504				
IR07MW28A	0414M016	3/30/04	METALS	BERYLLIUM	5	µg/l	U		1.4				
IR07MW28A	0414M016	3/30/04	METALS	CADMIUM	0.64	µg/l	J	J	9.3				
IR07MW28A	0414M016	3/30/04	METALS	CALCIUM	133000	µg/l	E	CJ83					
IR07MW28A	0414M016	3/30/04	METALS	CALCIUM	138000	µg/l	D	J3					
IR07MW28A	0414M016	3/30/04	METALS	CHROMIUM	10	µg/l	U		15.7				
IR07MW28A	0414M016	3/30/04	METALS	COBALT	1.9	µg/l	J	U1	20.8				
IR07MW28A	0414M016	3/30/04	METALS	COPPER	5.4	µg/l	J	U1	28				
IR07MW28A	0414M016	3/30/04	METALS	IRON	756	µg/l							
IR07MW28A	0414M016	3/30/04	METALS	LEAD	10	µg/l	U		14.4				
IR07MW28A	0414M016	3/30/04	METALS	MAGNESIUM	48100	µg/l		J3					

SUMMARY OR ANALYTICAL RESULTS
Seventeeth Quarterly Groundwater Sampling Report - Parcel B
Hunters Point Shipyard
San Francisco, California

Well ID	Sample Number	Sample Date	Analytical Method	Analyte	Result	UNITS	Lab Qual	Valid Code	POC Trigger	SentinelTrigger	VOC Trigger	Utility Line Trigger	Other Well Trigger Level
IR07MW28A	0414M016	3/30/04	METALS	MANGANESE	910	µg/l			8,140				
IR07MW28A	0414M016	3/30/04	METALS	MERCURY	0.067	µg/l	J	U1	0.60				
IR07MW28A	0414M016	3/30/04	METALS	NICKEL	5.2	µg/l	J	U1	96.5				
IR07MW28A	0414M016	3/30/04	METALS	POTASSIUM	10000	µg/l							
IR07MW28A	0414M016	3/30/04	METALS	SELENIUM	4.0	µg/l	J	J3					
IR07MW28A	0414M016	3/30/04	METALS	SILVER	10	µg/l	U		7.43				
IR07MW28A	0414M016	3/30/04	METALS	SODIUM	98800	µg/l	E	CJ83					
IR07MW28A	0414M016	3/30/04	METALS	SODIUM	104000	µg/l	D	J3					
IR07MW28A	0414M016	3/30/04	METALS	THALLIUM	25	µg/l	U		13				
IR07MW28A	0414M016	3/30/04	METALS	VANADIUM	1.4	µg/l	J	J					
IR07MW28A	0414M016	3/30/04	METALS	ZINC	104	µg/l		U1	81				
IR07MW28A	0414M016	3/30/04	PESTICIDES	4,4'-DDD	0.02	µg/l	U						
IR07MW28A	0414M016	3/30/04	PESTICIDES	4,4'-DDE	0.02	µg/l	U						
IR07MW28A	0414M016	3/30/04	PESTICIDES	4,4'-DDT	0.02	µg/l	U						
IR07MW28A	0414M016	3/30/04	PESTICIDES	ALDRIN	0.01	µg/l	U						
IR07MW28A	0414M016	3/30/04	PESTICIDES	alpha-BHC	0.01	µg/l	U						
IR07MW28A	0414M016	3/30/04	PESTICIDES	alpha-CHLORDANE	0.01	µg/l	U						
IR07MW28A	0414M016	3/30/04	PESTICIDES	AROCLOR-1016	0.2	µg/l	U		0.19				
IR07MW28A	0414M016	3/30/04	PESTICIDES	AROCLOR-1221	0.4	µg/l	U		0.19				
IR07MW28A	0414M016	3/30/04	PESTICIDES	AROCLOR-1232	0.2	µg/l	U		0.19				
IR07MW28A	0414M016	3/30/04	PESTICIDES	AROCLOR-1242	0.2	µg/l	U		0.19				
IR07MW28A	0414M016	3/30/04	PESTICIDES	AROCLOR-1248	0.2	µg/l	U		0.19				
IR07MW28A	0414M016	3/30/04	PESTICIDES	AROCLOR-1254	0.2	µg/l	U		0.19				
IR07MW28A	0414M016	3/30/04	PESTICIDES	AROCLOR-1260	0.2	µg/l	U		0.19				
IR07MW28A	0414M016	3/30/04	PESTICIDES	beta-BHC	0.01	µg/l	U	UJ7					
IR07MW28A	0414M016	3/30/04	PESTICIDES	delta-BHC	0.01	µg/l	U						
IR07MW28A	0414M016	3/30/04	PESTICIDES	DIELDRIN	0.02	µg/l	U						
IR07MW28A	0414M016	3/30/04	PESTICIDES	ENDOSULFAN I	0.01	µg/l	U						
IR07MW28A	0414M016	3/30/04	PESTICIDES	ENDOSULFAN II	0.02	µg/l	U						
IR07MW28A	0414M016	3/30/04	PESTICIDES	ENDOSULFAN SULFATE	0.02	µg/l	U						
IR07MW28A	0414M016	3/30/04	PESTICIDES	ENDRIN	0.02	µg/l	U						
IR07MW28A	0414M016	3/30/04	PESTICIDES	ENDRIN ALDEHYDE	0.02	µg/l	U	UJ7					
IR07MW28A	0414M016	3/30/04	PESTICIDES	ENDRIN KETONE	0.02	µg/l	U						
IR07MW28A	0414M016	3/30/04	PESTICIDES	gamma-BHC (LINDANE)	0.01	µg/l	U						
IR07MW28A	0414M016	3/30/04	PESTICIDES	gamma-CHLORDANE	0.01	µg/l	U						
IR07MW28A	0414M016	3/30/04	PESTICIDES	HEPTACHLOR	0.01	µg/l	U						
IR07MW28A	0414M016	3/30/04	PESTICIDES	HEPTACHLOR EPOXIDE	0.01	µg/l	U						
IR07MW28A	0414M016	3/30/04	PESTICIDES	METHOXYCHLOR	0.1	µg/l	U						
IR07MW28A	0414M016	3/30/04	PESTICIDES	TOXAPHENE	1	µg/l	U						
IR07MW28A	0414M016	3/30/04	SEMI-VOLATILES	1,1'-BIPHENYL	10	µg/l	U	CUJ3					
IR07MW28A	0414M016	3/30/04	SEMI-VOLATILES	1,1'-BIPHENYL	10	µg/l	U	UJ5					
IR07MW28A	0414M016	3/30/04	SEMI-VOLATILES	2,4,5-TRICHLOROPHENOL	25	µg/l	U	R2					
IR07MW28A	0414M016	3/30/04	SEMI-VOLATILES	2,4,5-TRICHLOROPHENOL	25	µg/l	U	UJ5					
IR07MW28A	0414M016	3/30/04	SEMI-VOLATILES	2,4,6-TRICHLOROPHENOL	10	µg/l	U	R2					
IR07MW28A	0414M016	3/30/04	SEMI-VOLATILES	2,4,6-TRICHLOROPHENOL	10	µg/l	U	UJ5					
IR07MW28A	0414M016	3/30/04	SEMI-VOLATILES	2,4-DICHLOROPHENOL	10	µg/l	U	R2					
IR07MW28A	0414M016	3/30/04	SEMI-VOLATILES	2,4-DICHLOROPHENOL	10	µg/l	U	UJ5					
IR07MW28A	0414M016	3/30/04	SEMI-VOLATILES	2,4-DIMETHYLPHENOL	10	µg/l	U	R2					
IR07MW28A	0414M016	3/30/04	SEMI-VOLATILES	2,4-DIMETHYLPHENOL	10	µg/l	U	UJ5					
IR07MW28A	0414M016	3/30/04	SEMI-VOLATILES	2,4-DINITROPHENOL	25	µg/l	U	R2					
IR07MW28A	0414M016	3/30/04	SEMI-VOLATILES	2,4-DINITROPHENOL	25	µg/l	U	UJ5					
IR07MW28A	0414M016	3/30/04	SEMI-VOLATILES	2,4-DINITROTOLUENE	10	µg/l	U	CUJ3					
IR07MW28A	0414M016	3/30/04	SEMI-VOLATILES	2,4-DINITROTOLUENE	10	µg/l	U	UJ5					
IR07MW28A	0414M016	3/30/04	SEMI-VOLATILES	2,6-DINITROTOLUENE	10	µg/l	U	CUJ3					
IR07MW28A	0414M016	3/30/04	SEMI-VOLATILES	2,6-DINITROTOLUENE	10	µg/l	U	UJ5					
IR07MW28A	0414M016	3/30/04	SEMI-VOLATILES	2-CHLORONAPHTHALENE	10	µg/l	U	CUJ3					
IR07MW28A	0414M016	3/30/04	SEMI-VOLATILES	2-CHLORONAPHTHALENE	10	µg/l	U	UJ5					
IR07MW28A	0414M016	3/30/04	SEMI-VOLATILES	2-CHLOROPHENOL	10	µg/l	U	R2					

SUMMARY OR ANALYTICAL RESULTS
Seventeeth Quarterly Groundwater Sampling Report - Parcel B
Hunters Point Shipyard
San Francisco, California

Well ID	Sample Number	Sample Date	Analytical Method	Analyte	Result	UNITS	Lab Qual	Valid Code	POC Trigger	Sentinel Trigger	VOC Trigger	Utility Line Trigger	Other Well Trigger Level
IR07MW28A	0414M016	3/30/04	SEMI-VOLATILES	2-CHLOROPHENOL	10	µg/l	U	UJ5					
IR07MW28A	0414M016	3/30/04	SEMI-VOLATILES	2-METHYLNAPHTHALENE	10	µg/l	U	CUJ3					
IR07MW28A	0414M016	3/30/04	SEMI-VOLATILES	2-METHYLNAPHTHALENE	10	µg/l	U	UJ5					
IR07MW28A	0414M016	3/30/04	SEMI-VOLATILES	2-METHYLPHENOL	10	µg/l	U	R2					
IR07MW28A	0414M016	3/30/04	SEMI-VOLATILES	2-METHYLPHENOL	10	µg/l	U	UJ5					
IR07MW28A	0414M016	3/30/04	SEMI-VOLATILES	2-NITROANILINE	25	µg/l	U	CUJ3					
IR07MW28A	0414M016	3/30/04	SEMI-VOLATILES	2-NITROANILINE	25	µg/l	U	UJ5					
IR07MW28A	0414M016	3/30/04	SEMI-VOLATILES	2-NITROPHENOL	10	µg/l	U	R2					
IR07MW28A	0414M016	3/30/04	SEMI-VOLATILES	2-NITROPHENOL	10	µg/l	U	UJ5					
IR07MW28A	0414M016	3/30/04	SEMI-VOLATILES	3,3'-DICHLOROBENZIDINE	10	µg/l	U	CUJ3					
IR07MW28A	0414M016	3/30/04	SEMI-VOLATILES	3,3'-DICHLOROBENZIDINE	10	µg/l	U	UJ5					
IR07MW28A	0414M016	3/30/04	SEMI-VOLATILES	3-NITROANILINE	25	µg/l	U	CUJ3					
IR07MW28A	0414M016	3/30/04	SEMI-VOLATILES	3-NITROANILINE	26	µg/l	U	UJ5					
IR07MW28A	0414M016	3/30/04	SEMI-VOLATILES	4,6-DINITRO-2-METHYLPHENOL	25	µg/l	U	R2					
IR07MW28A	0414M016	3/30/04	SEMI-VOLATILES	4,6-DINITRO-2-METHYLPHENOL	25	µg/l	U	UJ5					
IR07MW28A	0414M016	3/30/04	SEMI-VOLATILES	4-BROMOPHENYL PHENYL ETHER	10	µg/l	U	CUJ3					
IR07MW28A	0414M016	3/30/04	SEMI-VOLATILES	4-BROMOPHENYL PHENYL ETHER	10	µg/l	U	UJ5					
IR07MW28A	0414M016	3/30/04	SEMI-VOLATILES	4-CHLORO-3-METHYLPHENOL	10	µg/l	U	R2					
IR07MW28A	0414M016	3/30/04	SEMI-VOLATILES	4-CHLORO-3-METHYLPHENOL	10	µg/l	U	UJ5					
IR07MW28A	0414M016	3/30/04	SEMI-VOLATILES	4-CHLOROANILINE	10	µg/l	U	CUJ3					
IR07MW28A	0414M016	3/30/04	SEMI-VOLATILES	4-CHLOROANILINE	10	µg/l	U	UJ57					
IR07MW28A	0414M016	3/30/04	SEMI-VOLATILES	4-CHLOROPHENYL PHENYL ETHER	10	µg/l	U	CUJ3					
IR07MW28A	0414M016	3/30/04	SEMI-VOLATILES	4-CHLOROPHENYL PHENYL ETHER	10	µg/l	U	UJ5					
IR07MW28A	0414M016	3/30/04	SEMI-VOLATILES	4-METHYLPHENOL	10	µg/l	U	R2					
IR07MW28A	0414M016	3/30/04	SEMI-VOLATILES	4-METHYLPHENOL	10	µg/l	U	UJ5					
IR07MW28A	0414M016	3/30/04	SEMI-VOLATILES	4-NITROANILINE	25	µg/l	U	CUJ3					
IR07MW28A	0414M016	3/30/04	SEMI-VOLATILES	4-NITROANILINE	25	µg/l	U	UJ5					
IR07MW28A	0414M016	3/30/04	SEMI-VOLATILES	4-NITROPHENOL	25	µg/l	U	R2					
IR07MW28A	0414M016	3/30/04	SEMI-VOLATILES	4-NITROPHENOL	25	µg/l	U	UJ5					
IR07MW28A	0414M016	3/30/04	SEMI-VOLATILES	ACENAPHTHENE	10	µg/l	U	CUJ3	300				
IR07MW28A	0414M016	3/30/04	SEMI-VOLATILES	ACENAPHTHENE	10	µg/l	U	UJ5	300				
IR07MW28A	0414M016	3/30/04	SEMI-VOLATILES	ACENAPHTHYLENE	10	µg/l	U	CUJ3	300				
IR07MW28A	0414M016	3/30/04	SEMI-VOLATILES	ACENAPHTHYLENE	10	µg/l	U	UJ5	300				
IR07MW28A	0414M016	3/30/04	SEMI-VOLATILES	ACETOPHENONE	10	µg/l	U	CUJ3					
IR07MW28A	0414M016	3/30/04	SEMI-VOLATILES	ACETOPHENONE	10	µg/l	U	UJ5					
IR07MW28A	0414M016	3/30/04	SEMI-VOLATILES	ANTHRACENE	10	µg/l	U	CUJ3	300				
IR07MW28A	0414M016	3/30/04	SEMI-VOLATILES	ANTHRACENE	10	µg/l	U	UJ5	300				
IR07MW28A	0414M016	3/30/04	SEMI-VOLATILES	ATRAZINE	10	µg/l	U	CUJ3					
IR07MW28A	0414M016	3/30/04	SEMI-VOLATILES	ATRAZINE	10	µg/l	U	UJ5					
IR07MW28A	0414M016	3/30/04	SEMI-VOLATILES	BENZ(a)ANTHRACENE	10	µg/l	U	CUJ3	300				
IR07MW28A	0414M016	3/30/04	SEMI-VOLATILES	BENZ(a)ANTHRACENE	10	µg/l	U	UJ5	300				
IR07MW28A	0414M016	3/30/04	SEMI-VOLATILES	BENZALDEHYDE	10	µg/l	U	CUJ3					
IR07MW28A	0414M016	3/30/04	SEMI-VOLATILES	BENZALDEHYDE	10	µg/l	U	UJ57					
IR07MW28A	0414M016	3/30/04	SEMI-VOLATILES	BENZO(a)PYRENE	10	µg/l	U	CUJ3	300				
IR07MW28A	0414M016	3/30/04	SEMI-VOLATILES	BENZO(a)PYRENE	10	µg/l	U	UJ5	300				
IR07MW28A	0414M016	3/30/04	SEMI-VOLATILES	BENZO(b)FLUORANTHENE	10	µg/l	U	CUJ3	300				
IR07MW28A	0414M016	3/30/04	SEMI-VOLATILES	BENZO(b)FLUORANTHENE	10	µg/l	U	UJ5	300				
IR07MW28A	0414M016	3/30/04	SEMI-VOLATILES	BENZO(ghi)PERYLENE	10	µg/l	U	CUJ3	300				
IR07MW28A	0414M016	3/30/04	SEMI-VOLATILES	BENZO(ghi)PERYLENE	10	µg/l	U	UJ5	300				
IR07MW28A	0414M016	3/30/04	SEMI-VOLATILES	BENZO(k)FLUORANTHENE	10	µg/l	U	CUJ3	300				
IR07MW28A	0414M016	3/30/04	SEMI-VOLATILES	BENZO(k)FLUORANTHENE	10	µg/l	U	UJ5	300				
IR07MW28A	0414M016	3/30/04	SEMI-VOLATILES	BIS(2-CHLOROETHOXY)METHANE	10	µg/l	U	CUJ3					
IR07MW28A	0414M016	3/30/04	SEMI-VOLATILES	BIS(2-CHLOROETHOXY)METHANE	10	µg/l	U	UJ5					
IR07MW28A	0414M016	3/30/04	SEMI-VOLATILES	BIS(2-CHLOROETHYL)ETHER	10	µg/l	U	CUJ3					
IR07MW28A	0414M016	3/30/04	SEMI-VOLATILES	BIS(2-CHLOROETHYL)ETHER	10	µg/l	U	UJ5					
IR07MW28A	0414M016	3/30/04	SEMI-VOLATILES	BIS(2-ETHYLHEXYL)PHTHALATE	10	µg/l	U	CUJ3					
IR07MW28A	0414M016	3/30/04	SEMI-VOLATILES	BIS(2-ETHYLHEXYL)PHTHALATE	10	µg/l	U	UJ5					
IR07MW28A	0414M016	3/30/04	SEMI-VOLATILES	BUTYL BENZYL PHTHALATE	10	µg/l	U	CUJ3					

SUMMARY OR ANALYTICAL RESULTS
Seventeeth Quarterly Groundwater Sampling Report - Parcel B
Hunters Point Shipyard
San Francisco, California

Well ID	Sample Number	Sample Date	Analytical Method	Analyte	Result	UNITS	Lab Qual	Valid Code	POC Trigger	Sentinel Trigger	VOC Trigger	Utility Line Trigger	Other Well Trigger Level
IR07MW28A	0414M016	3/30/04	SEMI-VOLATILES	BUTYL BENZYL PHTHALATE	10	µg/l		UJ54					
IR07MW28A	0414M016	3/30/04	SEMI-VOLATILES	CAPROLACTAM	10	µg/l	U	CUJ3					
IR07MW28A	0414M016	3/30/04	SEMI-VOLATILES	CAPROLACTAM	10	µg/l	U	UJ5					
IR07MW28A	0414M016	3/30/04	SEMI-VOLATILES	CARBAZOLE	10	µg/l	U	CUJ3					
IR07MW28A	0414M016	3/30/04	SEMI-VOLATILES	CARBAZOLE	10	µg/l	U	UJ5					
IR07MW28A	0414M016	3/30/04	SEMI-VOLATILES	CHRYSENE	10	µg/l	U	CUJ3					
IR07MW28A	0414M016	3/30/04	SEMI-VOLATILES	CHRYSENE	10	µg/l	U	UJ5					
IR07MW28A	0414M016	3/30/04	SEMI-VOLATILES	DIBENZ(a,h)ANTHRACENE	10	µg/l	U	CUJ3	300				
IR07MW28A	0414M016	3/30/04	SEMI-VOLATILES	DIBENZ(a,h)ANTHRACENE	10	µg/l	U	UJ5	300				
IR07MW28A	0414M016	3/30/04	SEMI-VOLATILES	DIBENZOFURAN	10	µg/l	U	CUJ3					
IR07MW28A	0414M016	3/30/04	SEMI-VOLATILES	DIBENZOFURAN	10	µg/l	U	UJ5					
IR07MW28A	0414M016	3/30/04	SEMI-VOLATILES	DIETHYL PHTHALATE	10	µg/l	U	CUJ3					
IR07MW28A	0414M016	3/30/04	SEMI-VOLATILES	DIETHYL PHTHALATE	10	µg/l	U	UJ5					
IR07MW28A	0414M016	3/30/04	SEMI-VOLATILES	DIMETHYL PHTHALATE	10	µg/l	U	CUJ3					
IR07MW28A	0414M016	3/30/04	SEMI-VOLATILES	DIMETHYL PHTHALATE	10	µg/l	U	UJ5					
IR07MW28A	0414M016	3/30/04	SEMI-VOLATILES	DI-n-BUTYL PHTHALATE	10	µg/l	U	CUJ3					
IR07MW28A	0414M016	3/30/04	SEMI-VOLATILES	DI-n-BUTYL PHTHALATE	10	µg/l	U	UJ5					
IR07MW28A	0414M016	3/30/04	SEMI-VOLATILES	DI-n-OCTYL PHTHALATE	10	µg/l	U	CUJ3					
IR07MW28A	0414M016	3/30/04	SEMI-VOLATILES	DI-n-OCTYL PHTHALATE	10	µg/l	U	UJ5					
IR07MW28A	0414M016	3/30/04	SEMI-VOLATILES	FLUORANTHENE	10	µg/l	U	CUJ3	300				
IR07MW28A	0414M016	3/30/04	SEMI-VOLATILES	FLUORANTHENE	10	µg/l	U	UJ5	300				
IR07MW28A	0414M016	3/30/04	SEMI-VOLATILES	FLUORENE	10	µg/l	U	CUJ3	300				
IR07MW28A	0414M016	3/30/04	SEMI-VOLATILES	FLUORENE	10	µg/l	U	UJ5	300				
IR07MW28A	0414M016	3/30/04	SEMI-VOLATILES	HEXACHLOROBENZENE	10	µg/l	U	CUJ3					
IR07MW28A	0414M016	3/30/04	SEMI-VOLATILES	HEXACHLOROBENZENE	10	µg/l	U	UJ5					
IR07MW28A	0414M016	3/30/04	SEMI-VOLATILES	HEXACHLOROBUTADIENE	10	µg/l	U	CUJ3					
IR07MW28A	0414M016	3/30/04	SEMI-VOLATILES	HEXACHLOROBUTADIENE	10	µg/l	U	UJ5					
IR07MW28A	0414M016	3/30/04	SEMI-VOLATILES	HEXACHLOROCYCLOPENTADIENE	10	µg/l	U	CUJ3					
IR07MW28A	0414M016	3/30/04	SEMI-VOLATILES	HEXACHLOROCYCLOPENTADIENE	10	µg/l	U	UJ5					
IR07MW28A	0414M016	3/30/04	SEMI-VOLATILES	HEXACHLOROETHANE	10	µg/l	U	CUJ3					
IR07MW28A	0414M016	3/30/04	SEMI-VOLATILES	HEXACHLOROETHANE	10	µg/l	U	UJ5					
IR07MW28A	0414M016	3/30/04	SEMI-VOLATILES	INDENO(1,2,3-cd)PYRENE	10	µg/l	U	CUJ3	300				
IR07MW28A	0414M016	3/30/04	SEMI-VOLATILES	INDENO(1,2,3-cd)PYRENE	10	µg/l	U	UJ5	300				
IR07MW28A	0414M016	3/30/04	SEMI-VOLATILES	ISOPHORONE	10	µg/l	U	CUJ3					
IR07MW28A	0414M016	3/30/04	SEMI-VOLATILES	ISOPHORONE	10	µg/l	U	UJ5					
IR07MW28A	0414M016	3/30/04	SEMI-VOLATILES	NAPHTHALENE	10	µg/l	U	CUJ3	300				
IR07MW28A	0414M016	3/30/04	SEMI-VOLATILES	NAPHTHALENE	10	µg/l	U	UJ5	300				
IR07MW28A	0414M016	3/30/04	SEMI-VOLATILES	NITROBENZENE	10	µg/l	U	CUJ3					
IR07MW28A	0414M016	3/30/04	SEMI-VOLATILES	NITROBENZENE	10	µg/l	U	UJ5					
IR07MW28A	0414M016	3/30/04	SEMI-VOLATILES	N-NITROSODI-n-PROPYLAMINE	10	µg/l	U	CUJ3					
IR07MW28A	0414M016	3/30/04	SEMI-VOLATILES	N-NITROSODI-n-PROPYLAMINE	10	µg/l	U	UJ5					
IR07MW28A	0414M016	3/30/04	SEMI-VOLATILES	N-NITROSODIPHENYLAMINE	10	µg/l	U	CUJ3					
IR07MW28A	0414M016	3/30/04	SEMI-VOLATILES	N-NITROSODIPHENYLAMINE	10	µg/l	U	UJ5					
IR07MW28A	0414M016	3/30/04	SEMI-VOLATILES	PENTACHLOROPHENOL	25	µg/l	U	R2					
IR07MW28A	0414M016	3/30/04	SEMI-VOLATILES	PENTACHLOROPHENOL	25	µg/l	U	UJ5					
IR07MW28A	0414M016	3/30/04	SEMI-VOLATILES	PHENANTHRENE	10	µg/l	U	CUJ3	300				
IR07MW28A	0414M016	3/30/04	SEMI-VOLATILES	PHENANTHRENE	10	µg/l	U	UJ5	300				
IR07MW28A	0414M016	3/30/04	SEMI-VOLATILES	PHENOL	10	µg/l	U	R2					
IR07MW28A	0414M016	3/30/04	SEMI-VOLATILES	PHENOL	10	µg/l	U	UJ5					
IR07MW28A	0414M016	3/30/04	SEMI-VOLATILES	PROPANE, 2,2'-OXYBIS[1-CHLORO-	10	µg/l	U	CUJ3					
IR07MW28A	0414M016	3/30/04	SEMI-VOLATILES	PROPANE, 2,2'-OXYBIS[1-CHLORO-	10	µg/l	U	UJ5					
IR07MW28A	0414M016	3/30/04	SEMI-VOLATILES	PYRENE	10	µg/l	U	CUJ3					
IR07MW28A	0414M016	3/30/04	SEMI-VOLATILES	PYRENE	10	µg/l	U	UJ5					
IR07MW28A	0414M016	3/30/04	VOLATILES	1,1,1-TRICHLOROETHANE	0.5	µg/l	U						
IR07MW28A	0414M016	3/30/04	VOLATILES	1,1,2,2-TETRACHLOROETHANE	0.5	µg/l	U						
IR07MW28A	0414M016	3/30/04	VOLATILES	1,1,2-TRICHLORO-1,2,2-TRIFLUOROETHANE	0.5	µg/l	U						
IR07MW28A	0414M016	3/30/04	VOLATILES	1,1,2-TRICHLOROETHANE	0.5	µg/l	U						
IR07MW28A	0414M016	3/30/04	VOLATILES	1,1-DICHLOROETHANE	0.5	µg/l	U						

SUMMARY OR ANALYTICAL RESULTS
Seventeeth Quarterly Groundwater Sampling Report - Parcel B
Hunters Point Shipyard
San Francisco, California

Well ID	Sample Number	Sample Date	Analytical Method	Analyte	Result	UNITS	Lab Qual	Valid Code	POC Trigger	Sentinel Trigger	VOC Trigger	Utility Line Trigger	Other Well Trigger Level
IR07MW28A	0414M016	3/30/04	VOLATILES	1,1-DICHLOROETHENE	0.5	µg/l	U						
IR07MW28A	0414M016	3/30/04	VOLATILES	1,2,3-TRICHLOROBENZENE	0.5	µg/l	U						
IR07MW28A	0414M016	3/30/04	VOLATILES	1,2,4-TRICHLOROBENZENE	0.5	µg/l	U						
IR07MW28A	0414M016	3/30/04	VOLATILES	1,2-DIBROMO-3-CHLOROPROPANE	1	µg/l	U	UJ7					
IR07MW28A	0414M016	3/30/04	VOLATILES	1,2-DIBROMOETHANE	0.5	µg/l	U						
IR07MW28A	0414M016	3/30/04	VOLATILES	1,2-DICHLOROBENZENE	0.5	µg/l	U						
IR07MW28A	0414M016	3/30/04	VOLATILES	1,2-DICHLOROETHANE	0.5	µg/l	U						
IR07MW28A	0414M016	3/30/04	VOLATILES	1,2-DICHLOROPROPANE	0.5	µg/l	U						
IR07MW28A	0414M016	3/30/04	VOLATILES	1,3-DICHLOROBENZENE	0.5	µg/l	U						
IR07MW28A	0414M016	3/30/04	VOLATILES	1,4-DICHLOROBENZENE	0.5	µg/l	U						
IR07MW28A	0414M016	3/30/04	VOLATILES	2-BUTANONE	5	µg/l	U						
IR07MW28A	0414M016	3/30/04	VOLATILES	2-HEXANONE	5	µg/l	U						
IR07MW28A	0414M016	3/30/04	VOLATILES	4-METHYL-2-PENTANONE	5	µg/l	U						
IR07MW28A	0414M016	3/30/04	VOLATILES	ACETONE	5	µg/l	U	UJ7					
IR07MW28A	0414M016	3/30/04	VOLATILES	BENZENE	0.5	µg/l	U						
IR07MW28A	0414M016	3/30/04	VOLATILES	BROMOCHLOROMETHANE	0.5	µg/l	U						
IR07MW28A	0414M016	3/30/04	VOLATILES	BROMODICHLOROMETHANE	0.5	µg/l	U						
IR07MW28A	0414M016	3/30/04	VOLATILES	BROMOFORM	0.5	µg/l	U						
IR07MW28A	0414M016	3/30/04	VOLATILES	BROMOMETHANE	0.5	µg/l	U						
IR07MW28A	0414M016	3/30/04	VOLATILES	CARBON DISULFIDE	0.5	µg/l	U						
IR07MW28A	0414M016	3/30/04	VOLATILES	CARBON TETRACHLORIDE	0.5	µg/l	U						
IR07MW28A	0414M016	3/30/04	VOLATILES	CHLOROBENZENE	0.5	µg/l	U						
IR07MW28A	0414M016	3/30/04	VOLATILES	CHLOROETHANE	0.5	µg/l	U						
IR07MW28A	0414M016	3/30/04	VOLATILES	CHLOROFORM	0.5	µg/l	U						
IR07MW28A	0414M016	3/30/04	VOLATILES	CHLOROMETHANE	0.5	µg/l	U						
IR07MW28A	0414M016	3/30/04	VOLATILES	cis-1,2-DICHLOROETHENE	0.5	µg/l	U		85				
IR07MW28A	0414M016	3/30/04	VOLATILES	cis-1,3-DICHLOROPROPENE	0.5	µg/l	U						
IR07MW28A	0414M016	3/30/04	VOLATILES	CYCLOHEXANE	0.5	µg/l	U						
IR07MW28A	0414M016	3/30/04	VOLATILES	CYCLOHEXANE, METHYL-	0.5	µg/l	U						
IR07MW28A	0414M016	3/30/04	VOLATILES	DIBROMOCHLOROMETHANE	0.5	µg/l	U						
IR07MW28A	0414M016	3/30/04	VOLATILES	DICHLORODIFLUOROMETHANE	0.5	µg/l	U						
IR07MW28A	0414M016	3/30/04	VOLATILES	ETHYL BENZENE	0.5	µg/l	U						
IR07MW28A	0414M016	3/30/04	VOLATILES	ISOPROPYLBENZENE	0.5	µg/l	U						
IR07MW28A	0414M016	3/30/04	VOLATILES	METHYL ACETATE	0.5	µg/l	U	UJ7					
IR07MW28A	0414M016	3/30/04	VOLATILES	METHYL tert-BUTYL ETHER	0.5	µg/l	U						
IR07MW28A	0414M016	3/30/04	VOLATILES	METHYLENE CHLORIDE	0.5	µg/l	U						
IR07MW28A	0414M016	3/30/04	VOLATILES	STYRENE	0.5	µg/l	U						
IR07MW28A	0414M016	3/30/04	VOLATILES	TETRACHLOROETHENE	0.5	µg/l	U						
IR07MW28A	0414M016	3/30/04	VOLATILES	TOLUENE	0.5	µg/l	U						
IR07MW28A	0414M016	3/30/04	VOLATILES	trans-1,2-DICHLOROETHENE	0.5	µg/l	U		85				
IR07MW28A	0414M016	3/30/04	VOLATILES	trans-1,3-DICHLOROPROPENE	0.5	µg/l	U						
IR07MW28A	0414M016	3/30/04	VOLATILES	TRICHLOROETHENE	0.5	µg/l	U		114				
IR07MW28A	0414M016	3/30/04	VOLATILES	TRICHLOROFLUOROMETHANE	0.5	µg/l	U						
IR07MW28A	0414M016	3/30/04	VOLATILES	VINYL CHLORIDE	0.5	µg/l	U		55				
IR07MW28A	0414M016	3/30/04	VOLATILES	XYLENES (TOTAL)	0.5	µg/l	U						
IR07MWS-2	0414M011	3/29/04	FUELS	DIESEL	50	µg/l	U						
IR07MWS-2	0414M011	3/29/04	FUELS	GASOLINE	20	µg/l	U						
IR07MWS-2	0414M011	3/29/04	FUELS	MOTOR OIL	500	µg/l	U						
IR07MWS-2	0414M011	3/29/04	INORGANICS	HEXAVALENT CHROMIUM	20	µg/l	U						
IR07MWS-2	0414M011	3/29/04	INORGANICS	TOTAL SUSPENDED SOLIDS	10.0	mg/l	U						
IR07MWS-2	0414M011	3/29/04	METALS	ALUMINUM	525	µg/l	J	U1					
IR07MWS-2	0414M011	3/29/04	METALS	ANTIMONY	300	µg/l	U		500				
IR07MWS-2	0414M011	3/29/04	METALS	ARSENIC	50	µg/l	U	R2	38				
IR07MWS-2	0414M011	3/29/04	METALS	BARIUM	60.1	µg/l	J	J	504				
IR07MWS-2	0414M011	3/29/04	METALS	BERYLLIUM	3.0	µg/l	J	J	1.4				
IR07MWS-2	0414M011	3/29/04	METALS	CADMIUM	25	µg/l	U		9.3				
IR07MWS-2	0414M011	3/29/04	METALS	CALCIUM	220000	µg/l		J3					
IR07MWS-2	0414M011	3/29/04	METALS	CHROMIUM	50	µg/l	U		15.7				

SUMMARY OR AN[illegible]ICAL RESULTS
Seventeeth Quarterly Groundwater Sampling Report - Parcel B
Hunters Point Shipyard
San Francisco, California

Well ID	Sample Number	Sample Date	Analytical Method	Analyte	Result	UNITS	Lab Qual	Valid Code	POC Trigger	SentinelTrigger	VOC Trigger	Utility Line Trigger	Other Well Trigger Level
IR07MWS-2	0414M011	3/29/04	METALS	COBALT	250	µg/l	U		20.8				
IR07MWS-2	0414M011	3/29/04	METALS	COPPER	130	µg/l	U	UJ3	28				
IR07MWS-2	0414M011	3/29/04	METALS	IRON	500	µg/l	U						
IR07MWS-2	0414M011	3/29/04	METALS	LEAD	50	µg/l	U		14.4				
IR07MWS-2	0414M011	3/29/04	METALS	MAGNESIUM	647000	µg/l	E	CJ83					
IR07MWS-2	0414M011	3/29/04	METALS	MAGNESIUM	727000	µg/l	D	J3					
IR07MWS-2	0414M011	3/29/04	METALS	MANGANESE	51.2	µg/l	J	U2	8,140				
IR07MWS-2	0414M011	3/29/04	METALS	MERCURY	0.21	µg/l		U1	0.60				
IR07MWS-2	0414M011	3/29/04	METALS	NICKEL	200	µg/l	U	UJ9	96.5				
IR07MWS-2	0414M011	3/29/04	METALS	POTASSIUM	230000	µg/l	E	CJ83					
IR07MWS-2	0414M011	3/29/04	METALS	POTASSIUM	229000	µg/l	D	J3					
IR07MWS-2	0414M011	3/29/04	METALS	SELENIUM	30.2	µg/l	J	J9					
IR07MWS-2	0414M011	3/29/04	METALS	SILVER	50	µg/l	U		7.43				
IR07MWS-2	0414M011	3/29/04	METALS	SODIUM	6340000	µg/l	E	CJ83					
IR07MWS-2	0414M011	3/29/04	METALS	SODIUM	6060000	µg/l	D	J3					
IR07MWS-2	0414M011	3/29/04	METALS	THALLIUM	158	µg/l		J9	13				
IR07MWS-2	0414M011	3/29/04	METALS	VANADIUM	250	µg/l	U	UJ9					
IR07MWS-2	0414M011	3/29/04	METALS	ZINC	300	µg/l	U	UJ3	81				
IR07MWS-2	0414M011	3/29/04	VOLATILES	1,1,1-TRICHLOROETHANE	0.5	µg/l	U						
IR07MWS-2	0414M011	3/29/04	VOLATILES	1,1,2,2-TETRACHLOROETHANE	0.5	µg/l	U						
IR07MWS-2	0414M011	3/29/04	VOLATILES	1,1,2-TRICHLORO-1,2,2-TRIFLUOROETHANE	0.5	µg/l	U						
IR07MWS-2	0414M011	3/29/04	VOLATILES	1,1,2-TRICHLOROETHANE	0.5	µg/l	U						
IR07MWS-2	0414M011	3/29/04	VOLATILES	1,1-DICHLOROETHANE	0.5	µg/l	U						
IR07MWS-2	0414M011	3/29/04	VOLATILES	1,1-DICHLOROETHENE	0.5	µg/l	U						
IR07MWS-2	0414M011	3/29/04	VOLATILES	1,2,3-TRICHLOROBENZENE	0.5	µg/l	U						
IR07MWS-2	0414M011	3/29/04	VOLATILES	1,2,4-TRICHLOROBENZENE	0.5	µg/l	U						
IR07MWS-2	0414M011	3/29/04	VOLATILES	1,2-DIBROMO-3-CHLOROPROPANE	1	µg/l	U						
IR07MWS-2	0414M011	3/29/04	VOLATILES	1,2-DIBROMOETHANE	0.5	µg/l	U						
IR07MWS-2	0414M011	3/29/04	VOLATILES	1,2-DICHLOROBENZENE	0.5	µg/l	U						
IR07MWS-2	0414M011	3/29/04	VOLATILES	1,2-DICHLOROETHANE	0.5	µg/l	U						
IR07MWS-2	0414M011	3/29/04	VOLATILES	1,2-DICHLOROPROPANE	0.5	µg/l	U						
IR07MWS-2	0414M011	3/29/04	VOLATILES	1,3-DICHLOROBENZENE	0.5	µg/l	U						
IR07MWS-2	0414M011	3/29/04	VOLATILES	1,4-DICHLOROBENZENE	0.5	µg/l	U						
IR07MWS-2	0414M011	3/29/04	VOLATILES	2-BUTANONE	5	µg/l	U						
IR07MWS-2	0414M011	3/29/04	VOLATILES	2-HEXANONE	5	µg/l	U						
IR07MWS-2	0414M011	3/29/04	VOLATILES	4-METHYL-2-PENTANONE	5	µg/l	U						
IR07MWS-2	0414M011	3/29/04	VOLATILES	ACETONE	5	µg/l	U	UJ7					
IR07MWS-2	0414M011	3/29/04	VOLATILES	BENZENE	0.5	µg/l	U						
IR07MWS-2	0414M011	3/29/04	VOLATILES	BROMOCHLOROMETHANE	0.5	µg/l	U						
IR07MWS-2	0414M011	3/29/04	VOLATILES	BROMODICHLOROMETHANE	0.5	µg/l	U						
IR07MWS-2	0414M011	3/29/04	VOLATILES	BROMOFORM	0.5	µg/l	U						
IR07MWS-2	0414M011	3/29/04	VOLATILES	BROMOMETHANE	0.5	µg/l	U						
IR07MWS-2	0414M011	3/29/04	VOLATILES	CARBON DISULFIDE	0.5	µg/l	U						
IR07MWS-2	0414M011	3/29/04	VOLATILES	CARBON TETRACHLORIDE	0.5	µg/l	U						
IR07MWS-2	0414M011	3/29/04	VOLATILES	CHLOROBENZENE	0.5	µg/l	U						
IR07MWS-2	0414M011	3/29/04	VOLATILES	CHLOROETHANE	0.5	µg/l	U						
IR07MWS-2	0414M011	3/29/04	VOLATILES	CHLOROFORM	0.5	µg/l	U						
IR07MWS-2	0414M011	3/29/04	VOLATILES	CHLOROMETHANE	0.5	µg/l	U						
IR07MWS-2	0414M011	3/29/04	VOLATILES	cis-1,2-DICHLOROETHENE	0.5	µg/l	U		85				
IR07MWS-2	0414M011	3/29/04	VOLATILES	cis-1,3-DICHLOROPROPENE	0.5	µg/l	U						
IR07MWS-2	0414M011	3/29/04	VOLATILES	CYCLOHEXANE	0.5	µg/l	U						
IR07MWS-2	0414M011	3/29/04	VOLATILES	CYCLOHEXANE, METHYL-	0.5	µg/l	U						
IR07MWS-2	0414M011	3/29/04	VOLATILES	DIBROMOCHLOROMETHANE	0.5	µg/l	U						
IR07MWS-2	0414M011	3/29/04	VOLATILES	DICHLORODIFLUOROMETHANE	0.5	µg/l	U						
IR07MWS-2	0414M011	3/29/04	VOLATILES	ETHYL BENZENE	0.5	µg/l	U						
IR07MWS-2	0414M011	3/29/04	VOLATILES	ISOPROPYLBENZENE	0.5	µg/l	U						
IR07MWS-2	0414M011	3/29/04	VOLATILES	METHYL ACETATE	0.5	µg/l	U						
IR07MWS-2	0414M011	3/29/04	VOLATILES	METHYL tert-BUTYL ETHER	0.5	µg/l	U						

SUMMARY OR ANALYTICAL RESULTS
Seventeeth Quarterly Groundwater Sampling Report - Parcel B
Hunters Point Shipyard
San Francisco, California

Well ID	Sample Number	Sample Date	Analytical Method	Analyte	Result	UNITS	Lab Qual	Valid Code	POC Trigger	SentinelTrigger	VOC Trigger	Utility Line Trigger	Other Well Trigger Level
IR07MWS-2	0414M011	3/29/04	VOLATILES	METHYLENE CHLORIDE	0.5	µg/l	U						
IR07MWS-2	0414M011	3/29/04	VOLATILES	STYRENE	0.5	µg/l	U						
IR07MWS-2	0414M011	3/29/04	VOLATILES	TETRACHLOROETHENE	0.5	µg/l	U						
IR07MWS-2	0414M011	3/29/04	VOLATILES	TOLUENE	0.5	µg/l	U						
IR07MWS-2	0414M011	3/29/04	VOLATILES	trans-1,2-DICHLOROETHENE	0.5	µg/l	U		85				
IR07MWS-2	0414M011	3/29/04	VOLATILES	trans-1,3-DICHLOROPROPENE	0.5	µg/l	U						
IR07MWS-2	0414M011	3/29/04	VOLATILES	TRICHLOROETHENE	0.5	µg/l	U		114				
IR07MWS-2	0414M011	3/29/04	VOLATILES	TRICHLOROFLUOROMETHANE	0.5	µg/l	U						
IR07MWS-2	0414M011	3/29/04	VOLATILES	VINYL CHLORIDE	0.5	µg/l	U		55				
IR07MWS-2	0414M011	3/29/04	VOLATILES	XYLENES (TOTAL)	0.5	µg/l	U						
IR07MWS-4	0413H010	3/26/04	FUELS	DIESEL	50	µg/l	U						
IR07MWS-4	0413H010	3/26/04	FUELS	GASOLINE	20	µg/l	U						
IR07MWS-4	0413H010	3/26/04	FUELS	MOTOR OIL	500	µg/l	U						
IR07MWS-4	0413H010	3/26/04	INORGANICS	HEXAVALENT CHROMIUM	20	µg/l	U						
IR07MWS-4	0413H010	3/26/04	INORGANICS	SALINITY (FROM CHLORIDE)	2.8	NONE							
IR07MWS-4	0413H010	3/26/04	INORGANICS	TOTAL DISSOLVED SOLIDS	3016000	µg/l							
IR07MWS-4	0413H010	3/26/04	INORGANICS	TOTAL SUSPENDED SOLIDS	10.0	mg/l	U						
IR07MWS-4	0413H010	3/26/04	METALS	ALUMINUM	163	µg/l	J	J					
IR07MWS-4	0413H010	3/26/04	METALS	ANTIMONY	7.8	µg/l	J	J	500				
IR07MWS-4	0413H010	3/26/04	METALS	ARSENIC	4.0	µg/l	J	J	36				
IR07MWS-4	0413H010	3/26/04	METALS	BARIUM	87.7	µg/l	J	J4	504				
IR07MWS-4	0413H010	3/26/04	METALS	BERYLLIUM	0.52	µg/l	J	J	1.4				
IR07MWS-4	0413H010	3/26/04	METALS	CADMIUM	5	µg/l	U		9.3				
IR07MWS-4	0413H010	3/26/04	METALS	CALCIUM	80400	µg/l		J3					
IR07MWS-4	0413H010	3/26/04	METALS	CHROMIUM	10	µg/l	U		15.7				
IR07MWS-4	0413H010	3/26/04	METALS	COBALT	11.5	µg/l	J	J	20.8				
IR07MWS-4	0413H010	3/26/04	METALS	COPPER	2.4	µg/l	J	J	28				
IR07MWS-4	0413H010	3/26/04	METALS	IRON	319	µg/l							
IR07MWS-4	0413H010	3/26/04	METALS	LEAD	10	µg/l	U		14.4				
IR07MWS-4	0413H010	3/26/04	METALS	MAGNESIUM	157000	µg/l	E	CJ83					
IR07MWS-4	0413H010	3/26/04	METALS	MAGNESIUM	153000	µg/l	D	J3					
IR07MWS-4	0413H010	3/26/04	METALS	MANGANESE	2680	µg/l	E	CJ8	8,140				
IR07MWS-4	0413H010	3/26/04	METALS	MANGANESE	2660	µg/l	D		8,140				
IR07MWS-4	0413H010	3/26/04	METALS	MERCURY	0.20	µg/l		U1	0.60				
IR07MWS-4	0413H010	3/26/04	METALS	NICKEL	12.2	µg/l	J	J	96.5				
IR07MWS-4	0413H010	3/26/04	METALS	POTASSIUM	17900	µg/l		J3					
IR07MWS-4	0413H010	3/26/04	METALS	SELENIUM	5.6	µg/l	J	U1					
IR07MWS-4	0413H010	3/26/04	METALS	SILVER	10	µg/l	U		7.43				
IR07MWS-4	0413H010	3/26/04	METALS	SODIUM	882000	µg/l	E	CJ83					
IR07MWS-4	0413H010	3/26/04	METALS	SODIUM	754000	µg/l	D	J3					
IR07MWS-4	0413H010	3/26/04	METALS	THALLIUM	5.3	µg/l	J	J3	13				
IR07MWS-4	0413H010	3/26/04	METALS	VANADIUM	1.1	µg/l	J	J					
IR07MWS-4	0413H010	3/26/04	METALS	ZINC	60	µg/l	U		81				
IR07MWS-4	0413H010	3/26/04	VOLATILES	1,1,1-TRICHLOROETHANE	0.5	µg/l	U						
IR07MWS-4	0413H010	3/26/04	VOLATILES	1,1,2,2-TETRACHLOROETHANE	0.5	µg/l	U						
IR07MWS-4	0413H010	3/26/04	VOLATILES	1,1,2-TRICHLORO-1,2,2-TRIFLUOROETHANE	0.5	µg/l	U						
IR07MWS-4	0413H010	3/26/04	VOLATILES	1,1,2-TRICHLOROETHANE	0.5	µg/l	U						
IR07MWS-4	0413H010	3/26/04	VOLATILES	1,1-DICHLOROETHANE	0.5	µg/l	U						
IR07MWS-4	0413H010	3/26/04	VOLATILES	1,1-DICHLOROETHENE	0.5	µg/l	U						
IR07MWS-4	0413H010	3/26/04	VOLATILES	1,2,3-TRICHLOROBENZENE	0.5	µg/l	U						
IR07MWS-4	0413H010	3/26/04	VOLATILES	1,2,4-TRICHLOROBENZENE	0.5	µg/l	U						
IR07MWS-4	0413H010	3/26/04	VOLATILES	1,2-DIBROMO-3-CHLOROPROPANE	1	µg/l	U						
IR07MWS-4	0413H010	3/26/04	VOLATILES	1,2-DIBROMOETHANE	0.5	µg/l	U						
IR07MWS-4	0413H010	3/26/04	VOLATILES	1,2-DICHLOROBENZENE	0.5	µg/l	U						
IR07MWS-4	0413H010	3/26/04	VOLATILES	1,2-DICHLOROETHANE	0.5	µg/l	U						
IR07MWS-4	0413H010	3/26/04	VOLATILES	1,2-DICHLOROPROPANE	0.5	µg/l	U						
IR07MWS-4	0413H010	3/26/04	VOLATILES	1,3-DICHLOROBENZENE	0.5	µg/l	U						
IR07MWS-4	0413H010	3/26/04	VOLATILES	1,4-DICHLOROBENZENE	0.5	µg/l	U						

SUMMARY OR ANAL. .ICAL RESULTS
Seventeeth Quarterly Groundwater Sampling Report - Parcel B
Hunters Point Shipyard
San Francisco, California

Well ID	Sample Number	Sample Date	Analytical Method	Analyte	Result	UNITS	Lab Qual	Valid Code	POC Trigger	SentinelTrigger	VOC Trigger	Utility Line Trigger	Other Well Trigger Level
IR07MWS-4	0413H010	3/26/04	VOLATILES	2-BUTANONE	5	µg/l	U						
IR07MWS-4	0413H010	3/26/04	VOLATILES	2-HEXANONE	5	µg/l	U						
IR07MWS-4	0413H010	3/26/04	VOLATILES	4-METHYL-2-PENTANONE	5	µg/l	U						
IR07MWS-4	0413H010	3/26/04	VOLATILES	ACETONE	5	µg/l	U						
IR07MWS-4	0413H010	3/26/04	VOLATILES	BENZENE	0.5	µg/l	U						
IR07MWS-4	0413H010	3/26/04	VOLATILES	BROMOCHLOROMETHANE	0.5	µg/l	U						
IR07MWS-4	0413H010	3/26/04	VOLATILES	BROMODICHLOROMETHANE	0.5	µg/l	U						
IR07MWS-4	0413H010	3/26/04	VOLATILES	BROMOFORM	0.5	µg/l	U						
IR07MWS-4	0413H010	3/26/04	VOLATILES	BROMOMETHANE	0.5	µg/l	U						
IR07MWS-4	0413H010	3/26/04	VOLATILES	CARBON DISULFIDE	0.5	µg/l	U						
IR07MWS-4	0413H010	3/26/04	VOLATILES	CARBON TETRACHLORIDE	0.5	µg/l	U						
IR07MWS-4	0413H010	3/26/04	VOLATILES	CHLOROBENZENE	0.5	µg/l	U						
IR07MWS-4	0413H010	3/26/04	VOLATILES	CHLOROETHANE	0.5	µg/l	U						
IR07MWS-4	0413H010	3/26/04	VOLATILES	CHLOROFORM	0.5	µg/l	U						
IR07MWS-4	0413H010	3/26/04	VOLATILES	CHLOROMETHANE	0.5	µg/l	U						
IR07MWS-4	0413H010	3/26/04	VOLATILES	cis-1,2-DICHLOROETHENE	0.5	µg/l	U		85				
IR07MWS-4	0413H010	3/26/04	VOLATILES	cis-1,3-DICHLOROPROPENE	0.5	µg/l	U						
IR07MWS-4	0413H010	3/26/04	VOLATILES	CYCLOHEXANE	0.5	µg/l	U						
IR07MWS-4	0413H010	3/26/04	VOLATILES	CYCLOHEXANE, METHYL-	0.5	µg/l	U						
IR07MWS-4	0413H010	3/26/04	VOLATILES	DIBROMOCHLOROMETHANE	0.5	µg/l	U						
IR07MWS-4	0413H010	3/26/04	VOLATILES	DICHLORODIFLUOROMETHANE	0.5	µg/l	U						
IR07MWS-4	0413H010	3/26/04	VOLATILES	ETHYL BENZENE	0.5	µg/l	U						
IR07MWS-4	0413H010	3/26/04	VOLATILES	ISOPROPYLBENZENE	0.5	µg/l	U						
IR07MWS-4	0413H010	3/26/04	VOLATILES	METHYL ACETATE	0.5	µg/l	U	UJ7					
IR07MWS-4	0413H010	3/26/04	VOLATILES	METHYL tert-BUTYL ETHER	0.5	µg/l	U						
IR07MWS-4	0413H010	3/26/04	VOLATILES	METHYLENE CHLORIDE	0.5	µg/l	U						
IR07MWS-4	0413H010	3/26/04	VOLATILES	STYRENE	0.5	µg/l	U						
IR07MWS-4	0413H010	3/26/04	VOLATILES	TETRACHLOROETHENE	0.5	µg/l	U						
IR07MWS-4	0413H010	3/26/04	VOLATILES	TOLUENE	0.5	µg/l	U						
IR07MWS-4	0413H010	3/26/04	VOLATILES	trans-1,2-DICHLOROETHENE	0.5	µg/l	U		85				
IR07MWS-4	0413H010	3/26/04	VOLATILES	trans-1,3-DICHLOROPROPENE	0.5	µg/l	U						
IR07MWS-4	0413H010	3/26/04	VOLATILES	TRICHLOROETHENE	0.5	µg/l	U		114				
IR07MWS-4	0413H010	3/26/04	VOLATILES	TRICHLOROFLUOROMETHANE	0.5	µg/l	U						
IR07MWS-4	0413H010	3/26/04	VOLATILES	VINYL CHLORIDE	0.5	µg/l	U		55				
IR07MWS-4	0413H010	3/26/04	VOLATILES	XYLENES (TOTAL)	0.5	µg/l	U						
IR10MW12A	0413M002	3/23/04	INORGANICS	HEXAVALENT CHROMIUM	520	µg/l	E	CJ8					
IR10MW12A	0413M002	3/23/04	INORGANICS	HEXAVALENT CHROMIUM	550	µg/l	D						
IR10MW12A	0413M002	3/23/04	INORGANICS	TOTAL SUSPENDED SOLIDS	10.0	mg/l	U						
IR10MW12A	0413M002	3/23/04	VOLATILES	1,1,1-TRICHLOROETHANE	0.5	µg/l	U						
IR10MW12A	0413M002	3/23/04	VOLATILES	1,1,2,2-TETRACHLOROETHANE	0.5	µg/l	U						
IR10MW12A	0413M002	3/23/04	VOLATILES	1,1,2-TRICHLORO-1,2,2-TRIFLUOROETHANE	0.5	µg/l	U						
IR10MW12A	0413M002	3/23/04	VOLATILES	1,1,2-TRICHLOROETHANE	0.5	µg/l	U						
IR10MW12A	0413M002	3/23/04	VOLATILES	1,1-DICHLOROETHANE	0.5	µg/l	U						
IR10MW12A	0413M002	3/23/04	VOLATILES	1,1-DICHLOROETHENE	0.5	µg/l	U						
IR10MW12A	0413M002	3/23/04	VOLATILES	1,2,3-TRICHLOROBENZENE	0.5	µg/l	U						
IR10MW12A	0413M002	3/23/04	VOLATILES	1,2,4-TRICHLOROBENZENE	0.5	µg/l	U						
IR10MW12A	0413M002	3/23/04	VOLATILES	1,2-DIBROMO-3-CHLOROPROPANE	1	µg/l	U						
IR10MW12A	0413M002	3/23/04	VOLATILES	1,2-DIBROMOETHANE	0.5	µg/l	U						
IR10MW12A	0413M002	3/23/04	VOLATILES	1,2-DICHLOROBENZENE	0.5	µg/l	U						
IR10MW12A	0413M002	3/23/04	VOLATILES	1,2-DICHLOROETHANE	0.5	µg/l	U						
IR10MW12A	0413M002	3/23/04	VOLATILES	1,2-DICHLOROPROPANE	0.5	µg/l	U						
IR10MW12A	0413M002	3/23/04	VOLATILES	1,3-DICHLOROBENZENE	0.5	µg/l	U						
IR10MW12A	0413M002	3/23/04	VOLATILES	1,4-DICHLOROBENZENE	0.5	µg/l	U						
IR10MW12A	0413M002	3/23/04	VOLATILES	2-BUTANONE	5	µg/l	U						
IR10MW12A	0413M002	3/23/04	VOLATILES	2-HEXANONE	5	µg/l	U						
IR10MW12A	0413M002	3/23/04	VOLATILES	4-METHYL-2-PENTANONE	5	µg/l	U						
IR10MW12A	0413M002	3/23/04	VOLATILES	ACETONE	5	µg/l	U	UJ7					
IR10MW12A	0413M002	3/23/04	VOLATILES	BENZENE	0.5	µg/l	U						

SUMMARY OR ANALYTICAL RESULTS
Seventeeth Quarterly Groundwater Sampling Report - Parcel B
Hunters Point Shipyard
San Francisco, California

Well ID	Sample Number	Sample Date	Analytical Method	Analyte	Result	UNITS	Lab Qual	Valid Code	POC Trigger	SentinelTrigger	VOC Trigger	Utility Line Trigger	Other Well Trigger Level
IR10MW12A	0413M002	3/23/04	VOLATILES	BROMOCHLOROMETHANE	0.5	µg/l	U						
IR10MW12A	0413M002	3/23/04	VOLATILES	BROMODICHLOROMETHANE	0.5	µg/l	U						
IR10MW12A	0413M002	3/23/04	VOLATILES	BROMOFORM	0.5	µg/l	U						
IR10MW12A	0413M002	3/23/04	VOLATILES	BROMOMETHANE	0.5	µg/l	U						
IR10MW12A	0413M002	3/23/04	VOLATILES	CARBON DISULFIDE	0.5	µg/l	U						
IR10MW12A	0413M002	3/23/04	VOLATILES	CARBON TETRACHLORIDE	0.5	µg/l	U						
IR10MW12A	0413M002	3/23/04	VOLATILES	CHLOROBENZENE	0.5	µg/l	U						
IR10MW12A	0413M002	3/23/04	VOLATILES	CHLOROETHANE	0.5	µg/l	U						
IR10MW12A	0413M002	3/23/04	VOLATILES	CHLOROFORM	0.5	µg/l	U						
IR10MW12A	0413M002	3/23/04	VOLATILES	CHLOROMETHANE	0.5	µg/l	U						
IR10MW12A	0413M002	3/23/04	VOLATILES	cis-1,2-DICHLOROETHENE	0.5	µg/l	U						
IR10MW12A	0413M002	3/23/04	VOLATILES	cis-1,3-DICHLOROPROPENE	0.5	µg/l	U						
IR10MW12A	0413M002	3/23/04	VOLATILES	CYCLOHEXANE	0.5	µg/l	U						
IR10MW12A	0413M002	3/23/04	VOLATILES	CYCLOHEXANE, METHYL-	0.5	µg/l	U						
IR10MW12A	0413M002	3/23/04	VOLATILES	DIBROMOCHLOROMETHANE	0.5	µg/l	U						
IR10MW12A	0413M002	3/23/04	VOLATILES	DICHLORODIFLUOROMETHANE	0.5	µg/l	U						
IR10MW12A	0413M002	3/23/04	VOLATILES	ETHYL BENZENE	0.5	µg/l	U						
IR10MW12A	0413M002	3/23/04	VOLATILES	ISOPROPYLBENZENE	0.5	µg/l	U						
IR10MW12A	0413M002	3/23/04	VOLATILES	METHYL ACETATE	0.5	µg/l	U	UJ7					
IR10MW12A	0413M002	3/23/04	VOLATILES	METHYL tert-BUTYL ETHER	0.5	µg/l	U						
IR10MW12A	0413M002	3/23/04	VOLATILES	METHYLENE CHLORIDE	0.5	µg/l	U	UJ7					
IR10MW12A	0413M002	3/23/04	VOLATILES	STYRENE	0.5	µg/l	U						
IR10MW12A	0413M002	3/23/04	VOLATILES	TETRACHLOROETHENE	0.5	µg/l	U						
IR10MW12A	0413M002	3/23/04	VOLATILES	TOLUENE	0.5	µg/l	U						
IR10MW12A	0413M002	3/23/04	VOLATILES	trans-1,2-DICHLOROETHENE	0.5	µg/l	U						
IR10MW12A	0413M002	3/23/04	VOLATILES	trans-1,3-DICHLOROPROPENE	0.5	µg/l	U						
IR10MW12A	0413M002	3/23/04	VOLATILES	TRICHLOROETHENE	0.5	µg/l	U						
IR10MW12A	0413M002	3/23/04	VOLATILES	TRICHLOROFLUOROMETHANE	0.5	µg/l	U						
IR10MW12A	0413M002	3/23/04	VOLATILES	VINYL CHLORIDE	0.5	µg/l	U						
IR10MW12A	0413M002	3/23/04	VOLATILES	XYLENES (TOTAL)	0.5	µg/l	U						
IR10MW13A1	0413M001	3/22/04	VOLATILES	1,1,1-TRICHLOROETHANE	0.5	µg/l	U						
IR10MW13A1	0413M001	3/22/04	VOLATILES	1,1,2,2-TETRACHLOROETHANE	0.5	µg/l	U						
IR10MW13A1	0413M001	3/22/04	VOLATILES	1,1,2-TRICHLORO-1,2,2-TRIFLUOROETHANE	0.5	µg/l	U						
IR10MW13A1	0413M001	3/22/04	VOLATILES	1,1,2-TRICHLOROETHANE	0.5	µg/l	U						
IR10MW13A1	0413M001	3/22/04	VOLATILES	1,1-DICHLOROETHANE	0.5	µg/l	U						
IR10MW13A1	0413M001	3/22/04	VOLATILES	1,1-DICHLOROETHENE	0.5	µg/l	U						
IR10MW13A1	0413M001	3/22/04	VOLATILES	1,2,3-TRICHLOROBENZENE	0.5	µg/l	U						
IR10MW13A1	0413M001	3/22/04	VOLATILES	1,2,4-TRICHLOROBENZENE	0.5	µg/l	U						
IR10MW13A1	0413M001	3/22/04	VOLATILES	1,2-DIBROMO-3-CHLOROPROPANE	1	µg/l	U						
IR10MW13A1	0413M001	3/22/04	VOLATILES	1,2-DIBROMOETHANE	0.5	µg/l	U						
IR10MW13A1	0413M001	3/22/04	VOLATILES	1,2-DICHLOROBENZENE	0.5	µg/l	U						
IR10MW13A1	0413M001	3/22/04	VOLATILES	1,2-DICHLOROETHANE	0.5	µg/l	U						
IR10MW13A1	0413M001	3/22/04	VOLATILES	1,2-DICHLOROPROPANE	0.5	µg/l	U						
IR10MW13A1	0413M001	3/22/04	VOLATILES	1,3-DICHLOROBENZENE	0.5	µg/l	U						
IR10MW13A1	0413M001	3/22/04	VOLATILES	1,4-DICHLOROBENZENE	0.5	µg/l	U						
IR10MW13A1	0413M001	3/22/04	VOLATILES	2-BUTANONE	5	µg/l	U						
IR10MW13A1	0413M001	3/22/04	VOLATILES	2-HEXANONE	5	µg/l	U						
IR10MW13A1	0413M001	3/22/04	VOLATILES	4-METHYL-2-PENTANONE	5	µg/l	U						
IR10MW13A1	0413M001	3/22/04	VOLATILES	ACETONE	5	µg/l	U	UJ7					
IR10MW13A1	0413M001	3/22/04	VOLATILES	BENZENE	0.5	µg/l	U						
IR10MW13A1	0413M001	3/22/04	VOLATILES	BROMOCHLOROMETHANE	0.5	µg/l	U						
IR10MW13A1	0413M001	3/22/04	VOLATILES	BROMODICHLOROMETHANE	0.5	µg/l	U						
IR10MW13A1	0413M001	3/22/04	VOLATILES	BROMOFORM	0.5	µg/l	U						
IR10MW13A1	0413M001	3/22/04	VOLATILES	BROMOMETHANE	0.5	µg/l	U						
IR10MW13A1	0413M001	3/22/04	VOLATILES	CARBON DISULFIDE	0.5	µg/l	U						
IR10MW13A1	0413M001	3/22/04	VOLATILES	CARBON TETRACHLORIDE	0.5	µg/l	U						
IR10MW13A1	0413M001	3/22/04	VOLATILES	CHLOROBENZENE	0.5	µg/l	U						
IR10MW13A1	0413M001	3/22/04	VOLATILES	CHLOROETHANE	0.5	µg/l	U						

SUMMARY OR ANALYTICAL RESULTS
Seventeeth Quarterly Groundwater Sampling Report - Parcel B
Hunters Point Shipyard
San Francisco, California

Well ID	Sample Number	Sample Date	Analytical Method	Analyte	Result	UNITS	Lab Qual	Valid Code	POC Trigger	SentinelTrigger	VOC Trigger	Utility Line Trigger	Other Well Trigger Level
IR10MW13A1	0413M001	3/22/04	VOLATILES	CHLOROFORM	0.5	µg/l	U						
IR10MW13A1	0413M001	3/22/04	VOLATILES	CHLOROMETHANE	0.5	µg/l	U						
IR10MW13A1	0413M001	3/22/04	VOLATILES	cis-1,2-DICHLOROETHENE	13	µg/l					85		
IR10MW13A1	0413M001	3/22/04	VOLATILES	cis-1,3-DICHLOROPROPENE	0.5	µg/l	U						
IR10MW13A1	0413M001	3/22/04	VOLATILES	CYCLOHEXANE	0.5	µg/l	U						
IR10MW13A1	0413M001	3/22/04	VOLATILES	CYCLOHEXANE, METHYL-	0.5	µg/l	U						
IR10MW13A1	0413M001	3/22/04	VOLATILES	DIBROMOCHLOROMETHANE	0.5	µg/l	U						
IR10MW13A1	0413M001	3/22/04	VOLATILES	DICHLORODIFLUOROMETHANE	0.5	µg/l	U						
IR10MW13A1	0413M001	3/22/04	VOLATILES	ETHYL BENZENE	0.5	µg/l	U						
IR10MW13A1	0413M001	3/22/04	VOLATILES	ISOPROPYLBENZENE	0.5	µg/l	U						
IR10MW13A1	0413M001	3/22/04	VOLATILES	METHYL ACETATE	0.5	µg/l	U	UJ7					
IR10MW13A1	0413M001	3/22/04	VOLATILES	METHYL tert-BUTYL ETHER	0.5	µg/l	U						
IR10MW13A1	0413M001	3/22/04	VOLATILES	METHYLENE CHLORIDE	0.5	µg/l	U	UJ7					
IR10MW13A1	0413M001	3/22/04	VOLATILES	STYRENE	0.5	µg/l	U						
IR10MW13A1	0413M001	3/22/04	VOLATILES	TETRACHLOROETHENE	0.5	µg/l	U						
IR10MW13A1	0413M001	3/22/04	VOLATILES	TOLUENE	0.5	µg/l	U						
IR10MW13A1	0413M001	3/22/04	VOLATILES	trans-1,2-DICHLOROETHENE	1.1	µg/l					85		
IR10MW13A1	0413M001	3/22/04	VOLATILES	trans-1,3-DICHLOROPROPENE	0.5	µg/l	U						
IR10MW13A1	0413M001	3/22/04	VOLATILES	TRICHLOROETHENE	7.6	µg/l					114		
IR10MW13A1	0413M001	3/22/04	VOLATILES	TRICHLOROFLUOROMETHANE	0.5	µg/l	U						
IR10MW13A1	0413M001	3/22/04	VOLATILES	VINYL CHLORIDE	0.5	µg/l	U				55		
IR10MW13A1	0413M001	3/22/04	VOLATILES	XYLENES (TOTAL)	0.5	µg/l	U						
IR10MW14A	0413H001	3/22/04	VOLATILES	1,1,1-TRICHLOROETHANE	0.5	µg/l	U						
IR10MW14A	0413H001	3/22/04	VOLATILES	1,1,2,2-TETRACHLOROETHANE	0.5	µg/l	U						
IR10MW14A	0413H001	3/22/04	VOLATILES	1,1,2-TRICHLORO-1,2,2-TRIFLUOROETHANE	0.5	µg/l	U						
IR10MW14A	0413H001	3/22/04	VOLATILES	1,1,2-TRICHLOROETHANE	0.5	µg/l	U						
IR10MW14A	0413H001	3/22/04	VOLATILES	1,1-DICHLOROETHANE	0.5	µg/l	U						
IR10MW14A	0413H001	3/22/04	VOLATILES	1,1-DICHLOROETHENE	0.5	µg/l	U						
IR10MW14A	0413H001	3/22/04	VOLATILES	1,2,3-TRICHLOROBENZENE	0.5	µg/l	U						
IR10MW14A	0413H001	3/22/04	VOLATILES	1,2,4-TRICHLOROBENZENE	0.5	µg/l	U						
IR10MW14A	0413H001	3/22/04	VOLATILES	1,2-DIBROMO-3-CHLOROPROPANE	1	µg/l	U						
IR10MW14A	0413H001	3/22/04	VOLATILES	1,2-DIBROMOETHANE	0.5	µg/l	U						
IR10MW14A	0413H001	3/22/04	VOLATILES	1,2-DICHLOROBENZENE	0.5	µg/l	U						
IR10MW14A	0413H001	3/22/04	VOLATILES	1,2-DICHLOROETHANE	0.5	µg/l	U						
IR10MW14A	0413H001	3/22/04	VOLATILES	1,2-DICHLOROPROPANE	0.5	µg/l	U						
IR10MW14A	0413H001	3/22/04	VOLATILES	1,3-DICHLOROBENZENE	0.5	µg/l	U						
IR10MW14A	0413H001	3/22/04	VOLATILES	1,4-DICHLOROBENZENE	0.5	µg/l	U						
IR10MW14A	0413H001	3/22/04	VOLATILES	2-BUTANONE	5	µg/l	U						
IR10MW14A	0413H001	3/22/04	VOLATILES	2-HEXANONE	5	µg/l	U						
IR10MW14A	0413H001	3/22/04	VOLATILES	4-METHYL-2-PENTANONE	5	µg/l	U						
IR10MW14A	0413H001	3/22/04	VOLATILES	ACETONE	5	µg/l	U	UJ7					
IR10MW14A	0413H001	3/22/04	VOLATILES	BENZENE	0.5	µg/l	U						
IR10MW14A	0413H001	3/22/04	VOLATILES	BROMOCHLOROMETHANE	0.5	µg/l	U						
IR10MW14A	0413H001	3/22/04	VOLATILES	BROMODICHLOROMETHANE	0.5	µg/l	U						
IR10MW14A	0413H001	3/22/04	VOLATILES	BROMOFORM	0.5	µg/l	U						
IR10MW14A	0413H001	3/22/04	VOLATILES	BROMOMETHANE	0.5	µg/l	U						
IR10MW14A	0413H001	3/22/04	VOLATILES	CARBON DISULFIDE	0.5	µg/l	U						
IR10MW14A	0413H001	3/22/04	VOLATILES	CARBON TETRACHLORIDE	0.5	µg/l	U						
IR10MW14A	0413H001	3/22/04	VOLATILES	CHLOROBENZENE	0.5	µg/l	U						
IR10MW14A	0413H001	3/22/04	VOLATILES	CHLOROETHANE	0.5	µg/l	U						
IR10MW14A	0413H001	3/22/04	VOLATILES	CHLOROFORM	0.5	µg/l	U						
IR10MW14A	0413H001	3/22/04	VOLATILES	CHLOROMETHANE	0.5	µg/l	U						
IR10MW14A	0413H001	3/22/04	VOLATILES	cis-1,2-DICHLOROETHENE	0.5	µg/l	U				85		
IR10MW14A	0413H001	3/22/04	VOLATILES	cis-1,3-DICHLOROPROPENE	0.5	µg/l	U						
IR10MW14A	0413H001	3/22/04	VOLATILES	CYCLOHEXANE	0.5	µg/l	U						
IR10MW14A	0413H001	3/22/04	VOLATILES	CYCLOHEXANE, METHYL-	0.5	µg/l	U						
IR10MW14A	0413H001	3/22/04	VOLATILES	DIBROMOCHLOROMETHANE	0.5	µg/l	U						
IR10MW14A	0413H001	3/22/04	VOLATILES	DICHLORODIFLUOROMETHANE	0.5	µg/l	U						

SUMMARY OR ANALYTICAL RESULTS
Seventeeth Quarterly Groundwater Sampling Report - Parcel B
Hunters Point Shipyard
San Francisco, California

Well ID	Sample Number	Sample Date	Analytical Method	Analyte	Result	UNITS	Lab Qual	Valid Code	POC Trigger	SentinelTrigger	VOC Trigger	Utility Line Trigger	Other Well Trigger Level
IR10MW14A	0413H001	3/22/04	VOLATILES	ETHYL BENZENE	0.5	µg/l	U						
IR10MW14A	0413H001	3/22/04	VOLATILES	ISOPROPYLBENZENE	0.5	µg/l	U						
IR10MW14A	0413H001	3/22/04	VOLATILES	METHYL ACETATE	0.5	µg/l	U	UJ7					
IR10MW14A	0413H001	3/22/04	VOLATILES	METHYL tert-BUTYL ETHER	0.5	µg/l	U						
IR10MW14A	0413H001	3/22/04	VOLATILES	METHYLENE CHLORIDE	0.5	µg/l	U	UJ7					
IR10MW14A	0413H001	3/22/04	VOLATILES	STYRENE	0.5	µg/l	U						
IR10MW14A	0413H001	3/22/04	VOLATILES	TETRACHLOROETHENE	0.5	µg/l	U						
IR10MW14A	0413H001	3/22/04	VOLATILES	TOLUENE	0.5	µg/l	U						
IR10MW14A	0413H001	3/22/04	VOLATILES	trans-1,2-DICHLOROETHENE	0.5	µg/l	U				85		
IR10MW14A	0413H001	3/22/04	VOLATILES	trans-1,3-DICHLOROPROPENE	0.5	µg/l	U						
IR10MW14A	0413H001	3/22/04	VOLATILES	TRICHLOROETHENE	0.5	µg/l	U				114		
IR10MW14A	0413H001	3/22/04	VOLATILES	TRICHLOROFLUOROMETHANE	0.5	µg/l	U						
IR10MW14A	0413H001	3/22/04	VOLATILES	VINYL CHLORIDE	0.5	µg/l	U				55		
IR10MW14A	0413H001	3/22/04	VOLATILES	XYLENES (TOTAL)	0.5	µg/l	U						
IR10MW28A	0413H006	3/25/04	FUELS	DIESEL	210	µg/l	T1M						
IR10MW28A	0413H006	3/25/04	FUELS	GASOLINE	50	µg/l	U	UJ					
IR10MW28A	0413H006	3/25/04	FUELS	MOTOR OIL	500	µg/l	U						
IR10MW28A	0413H006	3/25/04	INORGANICS	HEXAVALENT CHROMIUM	20	µg/l	U						
IR10MW28A	0413H006	3/25/04	INORGANICS	TOTAL SUSPENDED SOLIDS	256	mg/l							
IR10MW28A	0413H006	3/25/04	METALS	ALUMINUM	22500	µg/l							
IR10MW28A	0413H006	3/25/04	METALS	ANTIMONY	21.1	µg/l	J	J		5,000			
IR10MW28A	0413H006	3/25/04	METALS	ARSENIC	10	µg/l	U			360			
IR10MW28A	0413H006	3/25/04	METALS	BARIUM	633	µg/l		J4		5,040			
IR10MW28A	0413H006	3/25/04	METALS	BERYLLIUM	5	µg/l	U			14			
IR10MW28A	0413H006	3/25/04	METALS	CADMIUM	1.6	µg/l	J	J		93			
IR10MW28A	0413H006	3/25/04	METALS	CALCIUM	79400	µg/l		J3					
IR10MW28A	0413H006	3/25/04	METALS	CHROMIUM	435	µg/l				157			
IR10MW28A	0413H006	3/25/04	METALS	COBALT	42.9	µg/l	J	J		208			
IR10MW28A	0413H006	3/25/04	METALS	COPPER	71.5	µg/l				280			
IR10MW28A	0413H006	3/25/04	METALS	IRON	71600	µg/l	E	CJ8					
IR10MW28A	0413H006	3/25/04	METALS	IRON	81800	µg/l	D						
IR10MW28A	0413H006	3/25/04	METALS	LEAD	246	µg/l				144			
IR10MW28A	0413H006	3/25/04	METALS	MAGNESIUM	392000	µg/l	E	CJ83					
IR10MW28A	0413H006	3/25/04	METALS	MAGNESIUM	441000	µg/l	D	J3					
IR10MW28A	0413H006	3/25/04	METALS	MANGANESE	1520	µg/l				81,400			
IR10MW28A	0413H006	3/25/04	METALS	MERCURY	0.28	µg/l		U1		6			
IR10MW28A	0413H006	3/25/04	METALS	NICKEL	689	µg/l				965			
IR10MW28A	0413H006	3/25/04	METALS	POTASSIUM	3890	µg/l	J	J3					
IR10MW28A	0413H006	3/25/04	METALS	SELENIUM	20.6	µg/l	J	J					
IR10MW28A	0413H006	3/25/04	METALS	SILVER	5.8	µg/l	J	U1		74.3			
IR10MW28A	0413H006	3/25/04	METALS	SODIUM	163000	µg/l	E	CJ83					
IR10MW28A	0413H006	3/25/04	METALS	SODIUM	168000	µg/l	D	J3					
IR10MW28A	0413H006	3/25/04	METALS	THALLIUM	35.1	µg/l		U1J3		130			
IR10MW28A	0413H006	3/25/04	METALS	VANADIUM	171	µg/l							
IR10MW28A	0413H006	3/25/04	METALS	ZINC	312	µg/l				810			
IR10MW28A	0413H006	3/25/04	VOLATILES	1,1,1-TRICHLOROETHANE	0.5	µg/l	U						
IR10MW28A	0413H006	3/25/04	VOLATILES	1,1,2,2-TETRACHLOROETHANE	0.5	µg/l	U						
IR10MW28A	0413H006	3/25/04	VOLATILES	1,1,2-TRICHLORO-1,2,2-TRIFLUOROETHANE	0.5	µg/l	U						
IR10MW28A	0413H006	3/25/04	VOLATILES	1,1,2-TRICHLOROETHANE	0.5	µg/l	U						
IR10MW28A	0413H006	3/25/04	VOLATILES	1,1-DICHLOROETHANE	0.5	µg/l	U						
IR10MW28A	0413H006	3/25/04	VOLATILES	1,1-DICHLOROETHENE	0.5	µg/l	U						
IR10MW28A	0413H006	3/25/04	VOLATILES	1,2,3-TRICHLOROBENZENE	0.5	µg/l	U						
IR10MW28A	0413H006	3/25/04	VOLATILES	1,2,4-TRICHLOROBENZENE	0.5	µg/l	U						
IR10MW28A	0413H006	3/25/04	VOLATILES	1,2-DIBROMO-3-CHLOROPROPANE	1	µg/l	U						
IR10MW28A	0413H006	3/25/04	VOLATILES	1,2-DIBROMOETHANE	0.5	µg/l	U						
IR10MW28A	0413H006	3/25/04	VOLATILES	1,2-DICHLOROBENZENE	0.5	µg/l	U						
IR10MW28A	0413H006	3/25/04	VOLATILES	1,2-DICHLOROETHANE	0.18	µg/l	J	J					
IR10MW28A	0413H006	3/25/04	VOLATILES	1,2-DICHLOROPROPANE	0.5	µg/l	U						

SUMMARY OR AN[illegible]CAL RESULTS
Seventeeth Quarterly Groundwater Sampling Report - Parcel B
Hunters Point Shipyard
San Francisco, California

Well ID	Sample Number	Sample Date	Analytical Method	Analyte	Result	UNITS	Lab Qual	Valid Code	POC Trigger	SentinelTrigger	VOC Trigger	Utility Line Trigger	Other Well Trigger Level
IR10MW28A	0413H006	3/25/04	VOLATILES	1,3-DICHLOROBENZENE	0.5	µg/l	U						
IR10MW28A	0413H006	3/25/04	VOLATILES	1,4-DICHLOROBENZENE	0.43	µg/l	J	J					
IR10MW28A	0413H006	3/25/04	VOLATILES	2-BUTANONE	5	µg/l	U						
IR10MW28A	0413H006	3/25/04	VOLATILES	2-HEXANONE	5	µg/l	U						
IR10MW28A	0413H006	3/25/04	VOLATILES	4-METHYL-2-PENTANONE	5	µg/l	U						
IR10MW28A	0413H006	3/25/04	VOLATILES	ACETONE	5	µg/l	U	UJ7					
IR10MW28A	0413H006	3/25/04	VOLATILES	BENZENE	0.5	µg/l	U						
IR10MW28A	0413H006	3/25/04	VOLATILES	BROMOCHLOROMETHANE	0.5	µg/l	U						
IR10MW28A	0413H006	3/25/04	VOLATILES	BROMODICHLOROMETHANE	0.5	µg/l	U						
IR10MW28A	0413H006	3/25/04	VOLATILES	BROMOFORM	0.5	µg/l	U						
IR10MW28A	0413H006	3/25/04	VOLATILES	BROMOMETHANE	0.5	µg/l	U						
IR10MW28A	0413H006	3/25/04	VOLATILES	CARBON DISULFIDE	0.5	µg/l	U						
IR10MW28A	0413H006	3/25/04	VOLATILES	CARBON TETRACHLORIDE	0.5	µg/l	U						
IR10MW28A	0413H006	3/25/04	VOLATILES	CHLOROBENZENE	2.3	µg/l							
IR10MW28A	0413H006	3/25/04	VOLATILES	CHLOROETHANE	0.5	µg/l	U						
IR10MW28A	0413H006	3/25/04	VOLATILES	CHLOROFORM	0.5	µg/l	U						
IR10MW28A	0413H006	3/25/04	VOLATILES	CHLOROMETHANE	0.5	µg/l	U						
IR10MW28A	0413H006	3/25/04	VOLATILES	cis-1,2-DICHLOROETHENE	0.5	µg/l	U			85			
IR10MW28A	0413H006	3/25/04	VOLATILES	cis-1,3-DICHLOROPROPENE	0.5	µg/l	U						
IR10MW28A	0413H006	3/25/04	VOLATILES	CYCLOHEXANE	0.5	µg/l	U						
IR10MW28A	0413H006	3/25/04	VOLATILES	CYCLOHEXANE, METHYL-	0.5	µg/l	U						
IR10MW28A	0413H006	3/25/04	VOLATILES	DIBROMOCHLOROMETHANE	0.5	µg/l	U						
IR10MW28A	0413H006	3/25/04	VOLATILES	DICHLORODIFLUOROMETHANE	0.5	µg/l	U						
IR10MW28A	0413H006	3/25/04	VOLATILES	ETHYL BENZENE	0.5	µg/l	U						
IR10MW28A	0413H006	3/25/04	VOLATILES	ISOPROPYLBENZENE	0.5	µg/l	U						
IR10MW28A	0413H006	3/25/04	VOLATILES	METHYL ACETATE	0.5	µg/l	U	UJ7					
IR10MW28A	0413H006	3/25/04	VOLATILES	METHYL tert-BUTYL ETHER	0.5	µg/l	U						
IR10MW28A	0413H006	3/25/04	VOLATILES	METHYLENE CHLORIDE	0.5	µg/l		U4					
IR10MW28A	0413H006	3/25/04	VOLATILES	STYRENE	0.5	µg/l	U						
IR10MW28A	0413H006	3/25/04	VOLATILES	TETRACHLOROETHENE	0.5	µg/l	U						
IR10MW28A	0413H006	3/25/04	VOLATILES	TOLUENE	0.5	µg/l	U						
IR10MW28A	0413H006	3/25/04	VOLATILES	trans-1,2-DICHLOROETHENE	0.5	µg/l	U			85			
IR10MW28A	0413H006	3/25/04	VOLATILES	trans-1,3-DICHLOROPROPENE	0.5	µg/l	U						
IR10MW28A	0413H006	3/25/04	VOLATILES	TRICHLOROETHENE	0.5	µg/l	U			114			
IR10MW28A	0413H006	3/25/04	VOLATILES	TRICHLOROFLUOROMETHANE	0.5	µg/l	U						
IR10MW28A	0413H006	3/25/04	VOLATILES	VINYL CHLORIDE	0.5	µg/l	U			55			
IR10MW28A	0413H006	3/25/04	VOLATILES	XYLENES (TOTAL)	0.5	µg/l	U						
IR10MW31A1	0413H002	3/22/04	FUELS	DIESEL	50	µg/l	U						
IR10MW31A1	0413H002	3/22/04	FUELS	GASOLINE	20	µg/l	U						
IR10MW31A1	0413H002	3/22/04	FUELS	MOTOR OIL	500	µg/l	U	UJ7					
IR10MW31A1	0413H002	3/22/04	INORGANICS	HEXAVALENT CHROMIUM	20	µg/l	U						
IR10MW31A1	0413H002	3/22/04	INORGANICS	TOTAL SUSPENDED SOLIDS	10.0	mg/l	U						
IR10MW31A1	0413H002	3/22/04	METALS	ALUMINUM	243	µg/l							
IR10MW31A1	0413H002	3/22/04	METALS	ANTIMONY	27.6	µg/l	J	J	500				
IR10MW31A1	0413H002	3/22/04	METALS	ARSENIC	10	µg/l	U		36				
IR10MW31A1	0413H002	3/22/04	METALS	BARIUM	56.6	µg/l	J	J4	504				
IR10MW31A1	0413H002	3/22/04	METALS	BERYLLIUM	1.5	µg/l	J	J	1.4				
IR10MW31A1	0413H002	3/22/04	METALS	CADMIUM	5	µg/l	U		9.3				
IR10MW31A1	0413H002	3/22/04	METALS	CALCIUM	165000	µg/l	E	CJ83					
IR10MW31A1	0413H002	3/22/04	METALS	CALCIUM	192000	µg/l	D	J3					
IR10MW31A1	0413H002	3/22/04	METALS	CHROMIUM	7.3	µg/l	J	U2	15.7				
IR10MW31A1	0413H002	3/22/04	METALS	COBALT	50	µg/l	U		20.8				
IR10MW31A1	0413H002	3/22/04	METALS	COPPER	3.6	µg/l	J	U1	28				
IR10MW31A1	0413H002	3/22/04	METALS	IRON	100	µg/l	U						
IR10MW31A1	0413H002	3/22/04	METALS	LEAD	10	µg/l	U		14.4				
IR10MW31A1	0413H002	3/22/04	METALS	MAGNESIUM	374000	µg/l	E	CJ83					
IR10MW31A1	0413H002	3/22/04	METALS	MAGNESIUM	423000	µg/l	D	J3					
IR10MW31A1	0413H002	3/22/04	METALS	MANGANESE	20.8	µg/l		U2	8,140				

SUMMARY OR ANALYTICAL RESULTS
Seventeeth Quarterly Groundwater Sampling Report - Parcel B
Hunters Point Shipyard
San Francisco, California

Well ID	Sample Number	Sample Date	Analytical Method	Analyte	Result	UNITS	Lab Qual	Valid Code	POC Trigger	SentinelTrigger	VOC Trigger	Utility Line Trigger	Other Well Trigger Level
IR10MW31A1	0413H002	3/22/04	METALS	MERCURY	0.2	µg/l	U		0.60				
IR10MW31A1	0413H002	3/22/04	METALS	NICKEL	40	µg/l	U		96.5				
IR10MW31A1	0413H002	3/22/04	METALS	POTASSIUM	83700	µg/l	E	CJ83					
IR10MW31A1	0413H002	3/22/04	METALS	POTASSIUM	80200	µg/l	D	J3					
IR10MW31A1	0413H002	3/22/04	METALS	SELENIUM	19.6	µg/l	J	J					
IR10MW31A1	0413H002	3/22/04	METALS	SILVER	10	µg/l	U		7.43				
IR10MW31A1	0413H002	3/22/04	METALS	SODIUM	3100000	µg/l	E	CJ83					
IR10MW31A1	0413H002	3/22/04	METALS	SODIUM	2470000	µg/l	D	J3					
IR10MW31A1	0413H002	3/22/04	METALS	THALLIUM	85.2	µg/l		J3	13				
IR10MW31A1	0413H002	3/22/04	METALS	VANADIUM	3.0	µg/l	J	J					
IR10MW31A1	0413H002	3/22/04	METALS	ZINC	60	µg/l	U		81				
IR10MW31A1	0413H002	3/22/04	VOLATILES	1,1,1-TRICHLOROETHANE	0.5	µg/l	U						
IR10MW31A1	0413H002	3/22/04	VOLATILES	1,1,2,2-TETRACHLOROETHANE	0.5	µg/l	U						
IR10MW31A1	0413H002	3/22/04	VOLATILES	1,1,2-TRICHLORO-1,2,2-TRIFLUOROETHANE	0.5	µg/l	U						
IR10MW31A1	0413H002	3/22/04	VOLATILES	1,1,2-TRICHLOROETHANE	0.5	µg/l	U						
IR10MW31A1	0413H002	3/22/04	VOLATILES	1,1-DICHLOROETHANE	0.5	µg/l	U						
IR10MW31A1	0413H002	3/22/04	VOLATILES	1,1-DICHLOROETHENE	0.5	µg/l	U						
IR10MW31A1	0413H002	3/22/04	VOLATILES	1,2,3-TRICHLOROBENZENE	0.5	µg/l	U						
IR10MW31A1	0413H002	3/22/04	VOLATILES	1,2,4-TRICHLOROBENZENE	0.5	µg/l	U						
IR10MW31A1	0413H002	3/22/04	VOLATILES	1,2-DIBROMO-3-CHLOROPROPANE	1	µg/l	U						
IR10MW31A1	0413H002	3/22/04	VOLATILES	1,2-DIBROMOETHANE	0.5	µg/l	U						
IR10MW31A1	0413H002	3/22/04	VOLATILES	1,2-DICHLOROBENZENE	0.5	µg/l	U						
IR10MW31A1	0413H002	3/22/04	VOLATILES	1,2-DICHLOROETHANE	0.36	µg/l	J	J					
IR10MW31A1	0413H002	3/22/04	VOLATILES	1,2-DICHLOROPROPANE	0.5	µg/l	U						
IR10MW31A1	0413H002	3/22/04	VOLATILES	1,3-DICHLOROBENZENE	0.5	µg/l	U						
IR10MW31A1	0413H002	3/22/04	VOLATILES	1,4-DICHLOROBENZENE	0.5	µg/l	U						
IR10MW31A1	0413H002	3/22/04	VOLATILES	2-BUTANONE	5	µg/l	U						
IR10MW31A1	0413H002	3/22/04	VOLATILES	2-HEXANONE	5	µg/l	U						
IR10MW31A1	0413H002	3/22/04	VOLATILES	4-METHYL-2-PENTANONE	5	µg/l	U						
IR10MW31A1	0413H002	3/22/04	VOLATILES	ACETONE	5	µg/l	U	UJ7					
IR10MW31A1	0413H002	3/22/04	VOLATILES	BENZENE	0.5	µg/l	U						
IR10MW31A1	0413H002	3/22/04	VOLATILES	BROMOCHLOROMETHANE	0.5	µg/l	U						
IR10MW31A1	0413H002	3/22/04	VOLATILES	BROMODICHLOROMETHANE	0.5	µg/l	U						
IR10MW31A1	0413H002	3/22/04	VOLATILES	BROMOFORM	0.5	µg/l	U						
IR10MW31A1	0413H002	3/22/04	VOLATILES	BROMOMETHANE	0.5	µg/l	U						
IR10MW31A1	0413H002	3/22/04	VOLATILES	CARBON DISULFIDE	0.5	µg/l	U						
IR10MW31A1	0413H002	3/22/04	VOLATILES	CARBON TETRACHLORIDE	0.5	µg/l	U						
IR10MW31A1	0413H002	3/22/04	VOLATILES	CHLOROBENZENE	0.5	µg/l	U						
IR10MW31A1	0413H002	3/22/04	VOLATILES	CHLOROETHANE	0.5	µg/l	U						
IR10MW31A1	0413H002	3/22/04	VOLATILES	CHLOROFORM	0.5	µg/l	U						
IR10MW31A1	0413H002	3/22/04	VOLATILES	CHLOROMETHANE	0.5	µg/l	U						
IR10MW31A1	0413H002	3/22/04	VOLATILES	cis-1,2-DICHLOROETHENE	0.5	µg/l	U		85				
IR10MW31A1	0413H002	3/22/04	VOLATILES	cis-1,3-DICHLOROPROPENE	0.5	µg/l	U						
IR10MW31A1	0413H002	3/22/04	VOLATILES	CYCLOHEXANE	0.5	µg/l	U						
IR10MW31A1	0413H002	3/22/04	VOLATILES	CYCLOHEXANE, METHYL-	0.5	µg/l	U						
IR10MW31A1	0413H002	3/22/04	VOLATILES	DIBROMOCHLOROMETHANE	0.5	µg/l	U						
IR10MW31A1	0413H002	3/22/04	VOLATILES	DICHLORODIFLUOROMETHANE	0.5	µg/l	U						
IR10MW31A1	0413H002	3/22/04	VOLATILES	ETHYL BENZENE	0.5	µg/l	U						
IR10MW31A1	0413H002	3/22/04	VOLATILES	ISOPROPYLBENZENE	0.5	µg/l	U						
IR10MW31A1	0413H002	3/22/04	VOLATILES	METHYL ACETATE	0.5	µg/l	U	UJ7					
IR10MW31A1	0413H002	3/22/04	VOLATILES	METHYL tert-BUTYL ETHER	0.5	µg/l	U						
IR10MW31A1	0413H002	3/22/04	VOLATILES	METHYLENE CHLORIDE	0.5	µg/l	U	UJ7					
IR10MW31A1	0413H002	3/22/04	VOLATILES	STYRENE	0.5	µg/l	U						
IR10MW31A1	0413H002	3/22/04	VOLATILES	TETRACHLOROETHENE	0.5	µg/l	U						
IR10MW31A1	0413H002	3/22/04	VOLATILES	TOLUENE	0.5	µg/l	U						
IR10MW31A1	0413H002	3/22/04	VOLATILES	trans-1,2-DICHLOROETHENE	0.5	µg/l	U		85				
IR10MW31A1	0413H002	3/22/04	VOLATILES	trans-1,3-DICHLOROPROPENE	0.5	µg/l	U						
IR10MW31A1	0413H002	3/22/04	VOLATILES	TRICHLOROETHENE	0.5	µg/l	U		114				

SUMMARY OR AI CAL RESULTS
Seventeeth Quarterly Groundwater Sampling Report - Parcel B
Hunters Point Shipyard
San Francisco, California

Well ID	Sample Number	Sample Date	Analytical Method	Analyte	Result	UNITS	Lab Qual	Valid Code	POC Trigger	Sentinel Trigger	VOC Trigger	Utility Line Trigger	Other Well Trigger Level
IR10MW31A1	0413H002	3/22/04	VOLATILES	TRICHLOROFLUOROMETHANE	0.5	µg/l	U						
IR10MW31A1	0413H002	3/22/04	VOLATILES	VINYL CHLORIDE	0.5	µg/l	U		55				
IR10MW31A1	0413H002	3/22/04	VOLATILES	XYLENES (TOTAL)	0.5	µg/l	U						
IR10MW33A	0414M017	3/30/04	SEMI-VOLATILES	1,4-DIOXANE	1.0	µg/l	U						
IR10MW33A	0414M017	3/30/04	VOLATILES	1,1,1-TRICHLOROETHANE	0.5	µg/l	U						
IR10MW33A	0414M017	3/30/04	VOLATILES	1,1,2,2-TETRACHLOROETHANE	0.5	µg/l	U						
IR10MW33A	0414M017	3/30/04	VOLATILES	1,1,2-TRICHLORO-1,2,2-TRIFLUOROETHANE	0.5	µg/l	U						
IR10MW33A	0414M017	3/30/04	VOLATILES	1,1,2-TRICHLOROETHANE	0.5	µg/l	U						
IR10MW33A	0414M017	3/30/04	VOLATILES	1,1-DICHLOROETHANE	0.5	µg/l	U						
IR10MW33A	0414M017	3/30/04	VOLATILES	1,1-DICHLOROETHENE	0.5	µg/l	U						
IR10MW33A	0414M017	3/30/04	VOLATILES	1,2,3-TRICHLOROBENZENE	0.5	µg/l	U						
IR10MW33A	0414M017	3/30/04	VOLATILES	1,2,4-TRICHLOROBENZENE	0.5	µg/l	U						
IR10MW33A	0414M017	3/30/04	VOLATILES	1,2-DIBROMO-3-CHLOROPROPANE	1	µg/l	U	UJ7					
IR10MW33A	0414M017	3/30/04	VOLATILES	1,2-DIBROMOETHANE	0.5	µg/l	U						
IR10MW33A	0414M017	3/30/04	VOLATILES	1,2-DICHLOROBENZENE	0.5	µg/l	U						
IR10MW33A	0414M017	3/30/04	VOLATILES	1,2-DICHLOROETHANE	0.5	µg/l	U						
IR10MW33A	0414M017	3/30/04	VOLATILES	1,2-DICHLOROPROPANE	0.5	µg/l	U						
IR10MW33A	0414M017	3/30/04	VOLATILES	1,3-DICHLOROBENZENE	0.5	µg/l	U						
IR10MW33A	0414M017	3/30/04	VOLATILES	1,4-DICHLOROBENZENE	0.5	µg/l	U						
IR10MW33A	0414M017	3/30/04	VOLATILES	2-BUTANONE	5	µg/l	U						
IR10MW33A	0414M017	3/30/04	VOLATILES	2-HEXANONE	5	µg/l	U						
IR10MW33A	0414M017	3/30/04	VOLATILES	4-METHYL-2-PENTANONE	5	µg/l	U						
IR10MW33A	0414M017	3/30/04	VOLATILES	ACETONE	5	µg/l	U	UJ7					
IR10MW33A	0414M017	3/30/04	VOLATILES	BENZENE	0.5	µg/l	U						
IR10MW33A	0414M017	3/30/04	VOLATILES	BROMOCHLOROMETHANE	0.5	µg/l	U						
IR10MW33A	0414M017	3/30/04	VOLATILES	BROMODICHLOROMETHANE	0.5	µg/l	U						
IR10MW33A	0414M017	3/30/04	VOLATILES	BROMOFORM	0.5	µg/l	U						
IR10MW33A	0414M017	3/30/04	VOLATILES	BROMOMETHANE	0.5	µg/l	U						
IR10MW33A	0414M017	3/30/04	VOLATILES	CARBON DISULFIDE	0.5	µg/l	U						
IR10MW33A	0414M017	3/30/04	VOLATILES	CARBON TETRACHLORIDE	0.5	µg/l	U						
IR10MW33A	0414M017	3/30/04	VOLATILES	CHLOROBENZENE	0.5	µg/l	U						
IR10MW33A	0414M017	3/30/04	VOLATILES	CHLOROETHANE	0.5	µg/l	U						
IR10MW33A	0414M017	3/30/04	VOLATILES	CHLOROFORM	0.5	µg/l	U						
IR10MW33A	0414M017	3/30/04	VOLATILES	CHLOROMETHANE	0.5	µg/l	U						
IR10MW33A	0414M017	3/30/04	VOLATILES	cis-1,2-DICHLOROETHENE	13	µg/l					85		
IR10MW33A	0414M017	3/30/04	VOLATILES	cis-1,3-DICHLOROPROPENE	0.5	µg/l	U						
IR10MW33A	0414M017	3/30/04	VOLATILES	CYCLOHEXANE	0.5	µg/l	U						
IR10MW33A	0414M017	3/30/04	VOLATILES	CYCLOHEXANE, METHYL-	0.5	µg/l	U						
IR10MW33A	0414M017	3/30/04	VOLATILES	DIBROMOCHLOROMETHANE	0.5	µg/l	U						
IR10MW33A	0414M017	3/30/04	VOLATILES	DICHLORODIFLUOROMETHANE	0.5	µg/l	U						
IR10MW33A	0414M017	3/30/04	VOLATILES	ETHYL BENZENE	0.5	µg/l	U						
IR10MW33A	0414M017	3/30/04	VOLATILES	ISOPROPYLBENZENE	0.5	µg/l	U						
IR10MW33A	0414M017	3/30/04	VOLATILES	METHYL ACETATE	0.5	µg/l	U	UJ7					
IR10MW33A	0414M017	3/30/04	VOLATILES	METHYL tert-BUTYL ETHER	0.5	µg/l	U						
IR10MW33A	0414M017	3/30/04	VOLATILES	METHYLENE CHLORIDE	0.5	µg/l	U						
IR10MW33A	0414M017	3/30/04	VOLATILES	STYRENE	0.5	µg/l	U						
IR10MW33A	0414M017	3/30/04	VOLATILES	TETRACHLOROETHENE	0.5	µg/l	U						
IR10MW33A	0414M017	3/30/04	VOLATILES	TOLUENE	0.5	µg/l	U						
IR10MW33A	0414M017	3/30/04	VOLATILES	trans-1,2-DICHLOROETHENE	6.8	µg/l					85		
IR10MW33A	0414M017	3/30/04	VOLATILES	trans-1,3-DICHLOROPROPENE	0.5	µg/l	U						
IR10MW33A	0414M017	3/30/04	VOLATILES	TRICHLOROETHENE	5.1	µg/l					114		
IR10MW33A	0414M017	3/30/04	VOLATILES	TRICHLOROFLUOROMETHANE	0.5	µg/l	U						
IR10MW33A	0414M017	3/30/04	VOLATILES	VINYL CHLORIDE	0.5	µg/l	U				55		
IR10MW33A	0414M017	3/30/04	VOLATILES	XYLENES (TOTAL)	0.5	µg/l	U						
IR10MW74A	0414H016	3/30/04	VOLATILES	1,1,1-TRICHLOROETHANE	0.5	µg/l	U						
IR10MW74A	0414H016	3/30/04	VOLATILES	1,1,2,2-TETRACHLOROETHANE	0.5	µg/l	U						
IR10MW74A	0414H016	3/30/04	VOLATILES	1,1,2-TRICHLORO-1,2,2-TRIFLUOROETHANE	0.5	µg/l	U						
IR10MW74A	0414H016	3/30/04	VOLATILES	1,1,2-TRICHLOROETHANE	0.5	µg/l	U						

SUMMARY OR ANALYTICAL RESULTS
Seventeeth Quarterly Groundwater Sampling Report - Parcel B
Hunters Point Shipyard
San Francisco, California

Well ID	Sample Number	Sample Date	Analytical Method	Analyte	Result	UNITS	Lab Qual	Valid Code	ROC Trigger	SentinelTrigger	VOC Trigger	Utility Line Trigger	Other Well Trigger Level
IR10MW74A	0414H016	3/30/04	VOLATILES	1,1-DICHLOROETHANE	0.5	µg/l	U						
IR10MW74A	0414H016	3/30/04	VOLATILES	1,1-DICHLOROETHENE	0.5	µg/l	U						
IR10MW74A	0414H016	3/30/04	VOLATILES	1,2,3-TRICHLOROBENZENE	0.5	µg/l	U						
IR10MW74A	0414H016	3/30/04	VOLATILES	1,2,4-TRICHLOROBENZENE	0.5	µg/l	U						
IR10MW74A	0414H016	3/30/04	VOLATILES	1,2-DIBROMO-3-CHLOROPROPANE	1	µg/l	U	UJ7					
IR10MW74A	0414H016	3/30/04	VOLATILES	1,2-DIBROMOETHANE	0.5	µg/l	U						
IR10MW74A	0414H016	3/30/04	VOLATILES	1,2-DICHLOROBENZENE	0.5	µg/l	U						
IR10MW74A	0414H016	3/30/04	VOLATILES	1,2-DICHLOROETHANE	0.5	µg/l	U						
IR10MW74A	0414H016	3/30/04	VOLATILES	1,2-DICHLOROPROPANE	0.5	µg/l	U						
IR10MW74A	0414H016	3/30/04	VOLATILES	1,3-DICHLOROBENZENE	0.5	µg/l	U						
IR10MW74A	0414H016	3/30/04	VOLATILES	1,4-DICHLOROBENZENE	0.5	µg/l	U						
IR10MW74A	0414H016	3/30/04	VOLATILES	2-BUTANONE	5	µg/l	U						
IR10MW74A	0414H016	3/30/04	VOLATILES	2-HEXANONE	5	µg/l	U						
IR10MW74A	0414H016	3/30/04	VOLATILES	4-METHYL-2-PENTANONE	5	µg/l	U						
IR10MW74A	0414H016	3/30/04	VOLATILES	ACETONE	5	µg/l	U	UJ7					
IR10MW74A	0414H016	3/30/04	VOLATILES	BENZENE	0.5	µg/l	U						
IR10MW74A	0414H016	3/30/04	VOLATILES	BROMOCHLOROMETHANE	0.5	µg/l	U						
IR10MW74A	0414H016	3/30/04	VOLATILES	BROMODICHLOROMETHANE	0.5	µg/l	U						
IR10MW74A	0414H016	3/30/04	VOLATILES	BROMOFORM	0.5	µg/l	U						
IR10MW74A	0414H016	3/30/04	VOLATILES	BROMOMETHANE	0.5	µg/l	U						
IR10MW74A	0414H016	3/30/04	VOLATILES	CARBON DISULFIDE	0.5	µg/l	U						
IR10MW74A	0414H016	3/30/04	VOLATILES	CARBON TETRACHLORIDE	0.5	µg/l	U						
IR10MW74A	0414H016	3/30/04	VOLATILES	CHLOROBENZENE	0.5	µg/l	U						
IR10MW74A	0414H016	3/30/04	VOLATILES	CHLOROETHANE	0.5	µg/l	U						
IR10MW74A	0414H016	3/30/04	VOLATILES	CHLOROFORM	0.5	µg/l	U						
IR10MW74A	0414H016	3/30/04	VOLATILES	CHLOROMETHANE	0.5	µg/l	U						
IR10MW74A	0414H016	3/30/04	VOLATILES	cis-1,2-DICHLOROETHENE	0.5	µg/l	U				85		
IR10MW74A	0414H016	3/30/04	VOLATILES	cis-1,3-DICHLOROPROPENE	0.5	µg/l	U						
IR10MW74A	0414H016	3/30/04	VOLATILES	CYCLOHEXANE	0.5	µg/l	U						
IR10MW74A	0414H016	3/30/04	VOLATILES	CYCLOHEXANE, METHYL-	0.5	µg/l	U						
IR10MW74A	0414H016	3/30/04	VOLATILES	DIBROMOCHLOROMETHANE	0.5	µg/l	U						
IR10MW74A	0414H016	3/30/04	VOLATILES	DICHLORODIFLUOROMETHANE	0.5	µg/l	U						
IR10MW74A	0414H016	3/30/04	VOLATILES	ETHYL BENZENE	0.5	µg/l	U						
IR10MW74A	0414H016	3/30/04	VOLATILES	ISOPROPYLBENZENE	0.5	µg/l	U						
IR10MW74A	0414H016	3/30/04	VOLATILES	METHYL ACETATE	0.5	µg/l	U	UJ7					
IR10MW74A	0414H016	3/30/04	VOLATILES	METHYL tert-BUTYL ETHER	0.5	µg/l	U						
IR10MW74A	0414H016	3/30/04	VOLATILES	METHYLENE CHLORIDE	0.5	µg/l	U						
IR10MW74A	0414H016	3/30/04	VOLATILES	STYRENE	0.5	µg/l	U						
IR10MW74A	0414H016	3/30/04	VOLATILES	TETRACHLOROETHENE	0.5	µg/l	U						
IR10MW74A	0414H016	3/30/04	VOLATILES	TOLUENE	0.5	µg/l	U						
IR10MW74A	0414H016	3/30/04	VOLATILES	trans-1,2-DICHLOROETHENE	0.5	µg/l	U				85		
IR10MW74A	0414H016	3/30/04	VOLATILES	trans-1,3-DICHLOROPROPENE	0.5	µg/l	U						
IR10MW74A	0414H016	3/30/04	VOLATILES	TRICHLOROETHENE	1.9	µg/l		J3			114		
IR10MW74A	0414H016	3/30/04	VOLATILES	TRICHLOROFLUOROMETHANE	0.5	µg/l	U						
IR10MW74A	0414H016	3/30/04	VOLATILES	VINYL CHLORIDE	0.5	µg/l	U				55		
IR10MW74A	0414H016	3/30/04	VOLATILES	XYLENES (TOTAL)	0.5	µg/l	U						
IR10MW61A	0413M005	3/23/04	VOLATILES	1,1,1,2-TETRACHLOROETHANE	0.5	µg/l	U						
IR10MW61A	0413M005	3/23/04	VOLATILES	1,1,1-TRICHLOROETHANE	0.5	µg/l	U						
IR10MW61A	0413M005	3/23/04	VOLATILES	1,1,2,2-TETRACHLOROETHANE	0.5	µg/l	U						
IR10MW61A	0413M005	3/23/04	VOLATILES	1,1,2-TRICHLOROETHANE	0.5	µg/l	U						
IR10MW61A	0413M005	3/23/04	VOLATILES	1,1-DICHLOROETHANE	1	µg/l	U						
IR10MW61A	0413M005	3/23/04	VOLATILES	1,1-DICHLOROETHENE	0.65	µg/l							
IR10MW61A	0413M005	3/23/04	VOLATILES	1,2,3-TRICHLOROPROPANE	1	µg/l	U						
IR10MW61A	0413M005	3/23/04	VOLATILES	1,2,4-TRICHLOROBENZENE	0.5	µg/l	U						
IR10MW61A	0413M005	3/23/04	VOLATILES	1,2-DIBROMO-3-CHLOROPROPANE	2	µg/l	U						
IR10MW61A	0413M005	3/23/04	VOLATILES	1,2-DICHLOROBENZENE	0.5	µg/l	U						
IR10MW61A	0413M005	3/23/04	VOLATILES	1,2-DICHLOROETHANE	0.5	µg/l	U						
IR10MW61A	0413M005	3/23/04	VOLATILES	1,2-DICHLOROPROPANE	0.5	µg/l	U						

SUMMARY OR AN...ICAL RESULTS
Seventeeth Quarterly Groundwater Sampling Report - Parcel B
Hunters Point Shipyard
San Francisco, California

Well ID	Sample Number	Sample Date	Analytical Method	Analyte	Result	UNITS	Lab Qual	Valid Code	POC Trigger	SentinelTrigger	VOC Trigger	Utility Line Trigger	Other Well Trigger Level
IR10MW61A	0413M005	3/23/04	VOLATILES	1,3-DICHLOROBENZENE	0.5	µg/l	U						
IR10MW61A	0413M005	3/23/04	VOLATILES	1,4-DICHLOROBENZENE	0.5	µg/l	U						
IR10MW61A	0413M005	3/23/04	VOLATILES	BENZENE	0.5	µg/l	U						
IR10MW61A	0413M005	3/23/04	VOLATILES	BROMOBENZENE	0.5	µg/l	U						
IR10MW61A	0413M005	3/23/04	VOLATILES	BROMODICHLOROMETHANE	0.5	µg/l	U						
IR10MW61A	0413M005	3/23/04	VOLATILES	BROMOFORM	0.5	µg/l	U						
IR10MW61A	0413M005	3/23/04	VOLATILES	BROMOMETHANE	1	µg/l	U						
IR10MW61A	0413M005	3/23/04	VOLATILES	CARBON TETRACHLORIDE	0.5	µg/l	U						
IR10MW61A	0413M005	3/23/04	VOLATILES	CHLOROBENZENE	0.5	µg/l	U						
IR10MW61A	0413M005	3/23/04	VOLATILES	CHLOROETHANE	0.5	µg/l	U						
IR10MW61A	0413M005	3/23/04	VOLATILES	CHLOROFORM	0.5	µg/l	U						
IR10MW61A	0413M005	3/23/04	VOLATILES	CHLOROMETHANE	0.5	µg/l	U						
IR10MW61A	0413M005	3/23/04	VOLATILES	cis-1,2-DICHLOROETHENE	170	µg/l	E	CJ8					
IR10MW61A	0413M005	3/23/04	VOLATILES	cis-1,2-DICHLOROETHENE	170	µg/l	D						
IR10MW61A	0413M005	3/23/04	VOLATILES	cis-1,3-DICHLOROPROPENE	0.5	µg/l	U						
IR10MW61A	0413M005	3/23/04	VOLATILES	DIBROMOCHLOROMETHANE	0.5	µg/l	U						
IR10MW61A	0413M005	3/23/04	VOLATILES	DIBROMOMETHANE	0.5	µg/l	U						
IR10MW61A	0413M005	3/23/04	VOLATILES	DICHLORODIFLUOROMETHANE	1	µg/l	U						
IR10MW61A	0413M005	3/23/04	VOLATILES	ETHYL BENZENE	0.5	µg/l	U						
IR10MW61A	0413M005	3/23/04	VOLATILES	FREON 113	0.5	µg/l	U						
IR10MW61A	0413M005	3/23/04	VOLATILES	METHYL tert-BUTYL ETHER	0.5	µg/l	U						
IR10MW61A	0413M005	3/23/04	VOLATILES	METHYLENE CHLORIDE	5	µg/l	U						
IR10MW61A	0413M005	3/23/04	VOLATILES	TETRACHLOROETHENE	0.5	µg/l	U						
IR10MW61A	0413M005	3/23/04	VOLATILES	TOLUENE	0.5	µg/l	U						
IR10MW61A	0413M005	3/23/04	VOLATILES	trans-1,2-DICHLOROETHENE	4.8	µg/l							
IR10MW61A	0413M005	3/23/04	VOLATILES	trans-1,3-DICHLOROPROPENE	0.5	µg/l	U						
IR10MW61A	0413M005	3/23/04	VOLATILES	TRICHLOROETHENE	9.0	µg/l							
IR10MW61A	0413M005	3/23/04	VOLATILES	TRICHLOROFLUOROMETHANE	0.5	µg/l	U						
IR10MW61A	0413M005	3/23/04	VOLATILES	VINYL CHLORIDE	25	µg/l							
IR10MW61A	0413M005	3/23/04	VOLATILES	XYLENES	0.5	µg/l	U						
IR10MW62A	0413H004	3/23/04	VOLATILES	1,1,1,2-TETRACHLOROETHANE	0.5	µg/l	U						
IR10MW62A	0413H004	3/23/04	VOLATILES	1,1,1-TRICHLOROETHANE	0.5	µg/l	U						
IR10MW62A	0413H004	3/23/04	VOLATILES	1,1,2,2-TETRACHLOROETHANE	0.5	µg/l	U						
IR10MW62A	0413H004	3/23/04	VOLATILES	1,1,2-TRICHLOROETHANE	0.5	µg/l	U						
IR10MW62A	0413H004	3/23/04	VOLATILES	1,1-DICHLOROETHANE	1	µg/l	U						
IR10MW62A	0413H004	3/23/04	VOLATILES	1,1-DICHLOROETHENE	0.5	µg/l	U						
IR10MW62A	0413H004	3/23/04	VOLATILES	1,2,3-TRICHLOROPROPANE	1	µg/l	U						
IR10MW62A	0413H004	3/23/04	VOLATILES	1,2,4-TRICHLOROBENZENE	0.5	µg/l	U						
IR10MW62A	0413H004	3/23/04	VOLATILES	1,2-DIBROMO-3-CHLOROPROPANE	2	µg/l	U						
IR10MW62A	0413H004	3/23/04	VOLATILES	1,2-DICHLOROBENZENE	0.5	µg/l	U						
IR10MW62A	0413H004	3/23/04	VOLATILES	1,2-DICHLOROETHANE	0.5	µg/l	U						
IR10MW62A	0413H004	3/23/04	VOLATILES	1,2-DICHLOROPROPANE	0.5	µg/l	U						
IR10MW62A	0413H004	3/23/04	VOLATILES	1,3-DICHLOROBENZENE	0.5	µg/l	U						
IR10MW62A	0413H004	3/23/04	VOLATILES	1,4-DICHLOROBENZENE	0.5	µg/l	U						
IR10MW62A	0413H004	3/23/04	VOLATILES	BENZENE	0.5	µg/l	U						
IR10MW62A	0413H004	3/23/04	VOLATILES	BROMOBENZENE	0.5	µg/l	U						
IR10MW62A	0413H004	3/23/04	VOLATILES	BROMODICHLOROMETHANE	0.5	µg/l	U						
IR10MW62A	0413H004	3/23/04	VOLATILES	BROMOFORM	0.5	µg/l	U						
IR10MW62A	0413H004	3/23/04	VOLATILES	BROMOMETHANE	1	µg/l	U						
IR10MW62A	0413H004	3/23/04	VOLATILES	CARBON TETRACHLORIDE	0.5	µg/l	U						
IR10MW62A	0413H004	3/23/04	VOLATILES	CHLOROBENZENE	0.5	µg/l	U						
IR10MW62A	0413H004	3/23/04	VOLATILES	CHLOROETHANE	0.5	µg/l	U						
IR10MW62A	0413H004	3/23/04	VOLATILES	CHLOROFORM	0.5	µg/l	U						
IR10MW62A	0413H004	3/23/04	VOLATILES	CHLOROMETHANE	0.5	µg/l	U						
IR10MW62A	0413H004	3/23/04	VOLATILES	cis-1,2-DICHLOROETHENE	0.95	µg/l							
IR10MW62A	0413H004	3/23/04	VOLATILES	cis-1,3-DICHLOROPROPENE	0.5	µg/l	U						
IR10MW62A	0413H004	3/23/04	VOLATILES	DIBROMOCHLOROMETHANE	0.5	µg/l	U						
IR10MW62A	0413H004	3/23/04	VOLATILES	DIBROMOMETHANE	0.5	µg/l	U						

SUMMARY OR ANALYTICAL RESULTS
Seventeeth Quarterly Groundwater Sampling Report - Parcel B
Hunters Point Shipyard
San Francisco, California

Well ID	Sample Number	Sample Date	Analytical Method	Analyte	Result	UNITS	Lab Qual	Valid Code	POC Trigger	SentinelTrigger	VOC Trigger	Utility Line Trigger	Other Well Trigger Level
IR10MW62A	0413H004	3/23/04	VOLATILES	DICHLORODIFLUOROMETHANE	1	µg/l	U						
IR10MW62A	0413H004	3/23/04	VOLATILES	ETHYL BENZENE	0.5	µg/l	U						
IR10MW62A	0413H004	3/23/04	VOLATILES	FREON 113	0.5	µg/l	U						
IR10MW62A	0413H004	3/23/04	VOLATILES	METHYL tert-BUTYL ETHER	0.5	µg/l	U						
IR10MW62A	0413H004	3/23/04	VOLATILES	METHYLENE CHLORIDE	5	µg/l	U						
IR10MW62A	0413H004	3/23/04	VOLATILES	TETRACHLOROETHENE	0.5	µg/l	U						
IR10MW62A	0413H004	3/23/04	VOLATILES	TOLUENE	0.5	µg/l	U						
IR10MW62A	0413H004	3/23/04	VOLATILES	trans-1,2-DICHLOROETHENE	0.5	µg/l	U						
IR10MW62A	0413H004	3/23/04	VOLATILES	trans-1,3-DICHLOROPROPENE	0.5	µg/l	U						
IR10MW62A	0413H004	3/23/04	VOLATILES	TRICHLOROETHENE	1.1	µg/l							
IR10MW62A	0413H004	3/23/04	VOLATILES	TRICHLOROFLUOROMETHANE	0.5	µg/l	U						
IR10MW62A	0413H004	3/23/04	VOLATILES	VINYL CHLORIDE	0.5	µg/l	U						
IR10MW62A	0413H004	3/23/04	VOLATILES	XYLENES	0.5	µg/l	U						
IR10MW71A	0413T001	3/26/04	VOLATILES	1,1,1,2-TETRACHLOROETHANE	10	µg/l	U						
IR10MW71A	0413T001	3/26/04	VOLATILES	1,1,1-TRICHLOROETHANE	10	µg/l	U						
IR10MW71A	0413T001	3/26/04	VOLATILES	1,1,2,2-TETRACHLOROETHANE	10	µg/l	U						
IR10MW71A	0413T001	3/26/04	VOLATILES	1,1,2-TRICHLOROETHANE	10	µg/l	U						
IR10MW71A	0413T001	3/26/04	VOLATILES	1,1-DICHLOROETHANE	20	µg/l	U						
IR10MW71A	0413T001	3/26/04	VOLATILES	1,1-DICHLOROETHENE	10	µg/l	U						
IR10MW71A	0413T001	3/26/04	VOLATILES	1,2,3-TRICHLOROPROPANE	20	µg/l	U						
IR10MW71A	0413T001	3/26/04	VOLATILES	1,2,4-TRICHLOROBENZENE	10	µg/l	U						
IR10MW71A	0413T001	3/26/04	VOLATILES	1,2-DIBROMO-3-CHLOROPROPANE	40	µg/l	U						
IR10MW71A	0413T001	3/26/04	VOLATILES	1,2-DICHLOROBENZENE	10	µg/l	U						
IR10MW71A	0413T001	3/26/04	VOLATILES	1,2-DICHLOROETHANE	10	µg/l	U						
IR10MW71A	0413T001	3/26/04	VOLATILES	1,2-DICHLOROPROPANE	10	µg/l	U						
IR10MW71A	0413T001	3/26/04	VOLATILES	1,3-DICHLOROBENZENE	10	µg/l	U						
IR10MW71A	0413T001	3/26/04	VOLATILES	1,4-DICHLOROBENZENE	10	µg/l	U						
IR10MW71A	0413T001	3/26/04	VOLATILES	BENZENE	10	µg/l	U						
IR10MW71A	0413T001	3/26/04	VOLATILES	BROMOBENZENE	10	µg/l	U						
IR10MW71A	0413T001	3/26/04	VOLATILES	BROMODICHLOROMETHANE	10	µg/l	U						
IR10MW71A	0413T001	3/26/04	VOLATILES	BROMOFORM	10	µg/l	U						
IR10MW71A	0413T001	3/26/04	VOLATILES	BROMOMETHANE	20	µg/l	U						
IR10MW71A	0413T001	3/26/04	VOLATILES	CARBON TETRACHLORIDE	10	µg/l	U						
IR10MW71A	0413T001	3/26/04	VOLATILES	CHLOROBENZENE	10	µg/l	U						
IR10MW71A	0413T001	3/26/04	VOLATILES	CHLOROETHANE	10	µg/l	U						
IR10MW71A	0413T001	3/26/04	VOLATILES	CHLOROFORM	10	µg/l	U						
IR10MW71A	0413T001	3/26/04	VOLATILES	CHLOROMETHANE	10	µg/l	U						
IR10MW71A	0413T001	3/26/04	VOLATILES	cis-1,2-DICHLOROETHENE	30	µg/l							
IR10MW71A	0413T001	3/26/04	VOLATILES	cis-1,3-DICHLOROPROPENE	10	µg/l	U						
IR10MW71A	0413T001	3/26/04	VOLATILES	DIBROMOCHLOROMETHANE	10	µg/l	U						
IR10MW71A	0413T001	3/26/04	VOLATILES	DIBROMOMETHANE	10	µg/l	U						
IR10MW71A	0413T001	3/26/04	VOLATILES	DICHLORODIFLUOROMETHANE	20	µg/l	U						
IR10MW71A	0413T001	3/26/04	VOLATILES	ETHYL BENZENE	10	µg/l	U						
IR10MW71A	0413T001	3/26/04	VOLATILES	FREON 113	10	µg/l	U						
IR10MW71A	0413T001	3/26/04	VOLATILES	METHYL tert-BUTYL ETHER	10	µg/l	U						
IR10MW71A	0413T001	3/26/04	VOLATILES	METHYLENE CHLORIDE	100	µg/l	U						
IR10MW71A	0413T001	3/26/04	VOLATILES	TETRACHLOROETHENE	10	µg/l	U						
IR10MW71A	0413T001	3/26/04	VOLATILES	TOLUENE	10	µg/l	U						
IR10MW71A	0413T001	3/26/04	VOLATILES	trans-1,2-DICHLOROETHENE	10	µg/l	U						
IR10MW71A	0413T001	3/26/04	VOLATILES	trans-1,3-DICHLOROPROPENE	10	µg/l	U						
IR10MW71A	0413T001	3/26/04	VOLATILES	TRICHLOROETHENE	650	µg/l							
IR10MW71A	0413T001	3/26/04	VOLATILES	TRICHLOROFLUOROMETHANE	10	µg/l	U						
IR10MW71A	0413T001	3/26/04	VOLATILES	VINYL CHLORIDE	10	µg/l	U						
IR10MW71A	0413T001	3/26/04	VOLATILES	XYLENES	10	µg/l	U						
IR10MW76A	0414H017	3/30/04	VOLATILES	1,1,1,2-TETRACHLOROETHANE	0.5	µg/l	U						
IR10MW76A	0414H017	3/30/04	VOLATILES	1,1,1-TRICHLOROETHANE	0.5	µg/l	U						
IR10MW76A	0414H017	3/30/04	VOLATILES	1,1,2,2-TETRACHLOROETHANE	0.5	µg/l	U						
IR10MW76A	0414H017	3/30/04	VOLATILES	1,1,2-TRICHLOROETHANE	0.5	µg/l	U						

SUMMARY OR ANALYTICAL RESULTS
Seventeeth Quarterly Groundwater Sampling Report - Parcel B
Hunters Point Shipyard
San Francisco, California

Well ID	Sample Number	Sample Date	Analytical Method	Analyte	Result	UNITS	Lab Qual	Valid Code	POC Trigger	SentinelTrigger	VOC Trigger	Utility Line Trigger	Other Well Trigger Level
IR10MW76A	0414H017	3/30/04	VOLATILES	1,1-DICHLOROETHANE	1	µg/l	U						
IR10MW76A	0414H017	3/30/04	VOLATILES	1,1-DICHLOROETHENE	0.5	µg/l	U						
IR10MW76A	0414H017	3/30/04	VOLATILES	1,2,3-TRICHLOROPROPANE	1	µg/l	U						
IR10MW76A	0414H017	3/30/04	VOLATILES	1,2,4-TRICHLOROBENZENE	0.5	µg/l	U						
IR10MW76A	0414H017	3/30/04	VOLATILES	1,2-DIBROMO-3-CHLOROPROPANE	2	µg/l	U						
IR10MW76A	0414H017	3/30/04	VOLATILES	1,2-DICHLOROBENZENE	0.5	µg/l	U						
IR10MW76A	0414H017	3/30/04	VOLATILES	1,2-DICHLOROETHANE	0.18	µg/l	J	J					
IR10MW76A	0414H017	3/30/04	VOLATILES	1,2-DICHLOROPROPANE	0.5	µg/l	U						
IR10MW76A	0414H017	3/30/04	VOLATILES	1,3-DICHLOROBENZENE	0.5	µg/l	U						
IR10MW76A	0414H017	3/30/04	VOLATILES	1,4-DICHLOROBENZENE	0.5	µg/l	U						
IR10MW76A	0414H017	3/30/04	VOLATILES	BENZENE	0.5	µg/l	U						
IR10MW76A	0414H017	3/30/04	VOLATILES	BROMOBENZENE	0.5	µg/l	U						
IR10MW76A	0414H017	3/30/04	VOLATILES	BROMODICHLOROMETHANE	0.5	µg/l	U						
IR10MW76A	0414H017	3/30/04	VOLATILES	BROMOFORM	0.5	µg/l	U						
IR10MW76A	0414H017	3/30/04	VOLATILES	BROMOMETHANE	1	µg/l	U						
IR10MW76A	0414H017	3/30/04	VOLATILES	CARBON TETRACHLORIDE	0.5	µg/l	U						
IR10MW76A	0414H017	3/30/04	VOLATILES	CHLOROBENZENE	0.5	µg/l	U						
IR10MW76A	0414H017	3/30/04	VOLATILES	CHLOROETHANE	0.5	µg/l	U						
IR10MW76A	0414H017	3/30/04	VOLATILES	CHLOROFORM	0.53	µg/l							
IR10MW76A	0414H017	3/30/04	VOLATILES	CHLOROMETHANE	0.5	µg/l	U						
IR10MW76A	0414H017	3/30/04	VOLATILES	cis-1,2-DICHLOROETHENE	0.29	µg/l	J	J					
IR10MW76A	0414H017	3/30/04	VOLATILES	cis-1,3-DICHLOROPROPENE	0.5	µg/l	U						
IR10MW76A	0414H017	3/30/04	VOLATILES	DIBROMOCHLOROMETHANE	0.5	µg/l	U						
IR10MW76A	0414H017	3/30/04	VOLATILES	DIBROMOMETHANE	0.5	µg/l	U						
IR10MW76A	0414H017	3/30/04	VOLATILES	DICHLORODIFLUOROMETHANE	1	µg/l	U						
IR10MW76A	0414H017	3/30/04	VOLATILES	ETHYL BENZENE	0.5	µg/l	U						
IR10MW76A	0414H017	3/30/04	VOLATILES	FREON 113	0.5	µg/l	U						
IR10MW76A	0414H017	3/30/04	VOLATILES	METHYL tert-BUTYL ETHER	0.5	µg/l	U						
IR10MW76A	0414H017	3/30/04	VOLATILES	METHYLENE CHLORIDE	5	µg/l	U						
IR10MW76A	0414H017	3/30/04	VOLATILES	TETRACHLOROETHENE	0.5	µg/l	U						
IR10MW76A	0414H017	3/30/04	VOLATILES	TOLUENE	0.5	µg/l	U						
IR10MW76A	0414H017	3/30/04	VOLATILES	trans-1,2-DICHLOROETHENE	0.5	µg/l	U						
IR10MW76A	0414H017	3/30/04	VOLATILES	trans-1,3-DICHLOROPROPENE	0.5	µg/l	U						
IR10MW76A	0414H017	3/30/04	VOLATILES	TRICHLOROETHENE	0.52	µg/l							
IR10MW76A	0414H017	3/30/04	VOLATILES	TRICHLOROFLUOROMETHANE	0.5	µg/l	U						
IR10MW76A	0414H017	3/30/04	VOLATILES	VINYL CHLORIDE	0.5	µg/l	U						
IR10MW76A	0414H017	3/30/04	VOLATILES	XYLENES	0.5	µg/l	U						
IR10MW79A	0413H008	3/25/04	VOLATILES	1,1,1,2-TETRACHLOROETHANE	0.5	µg/l	U						
IR10MW79A	0413H008	3/25/04	VOLATILES	1,1,1-TRICHLOROETHANE	0.5	µg/l	U						
IR10MW79A	0413H008	3/25/04	VOLATILES	1,1,2,2-TETRACHLOROETHANE	0.5	µg/l	U						
IR10MW79A	0413H008	3/25/04	VOLATILES	1,1,2-TRICHLOROETHANE	0.5	µg/l	U						
IR10MW79A	0413H008	3/25/04	VOLATILES	1,1-DICHLOROETHANE	1	µg/l	U						
IR10MW79A	0413H008	3/25/04	VOLATILES	1,1-DICHLOROETHENE	0.5	µg/l	U						
IR10MW79A	0413H008	3/25/04	VOLATILES	1,2,3-TRICHLOROPROPANE	1	µg/l	U						
IR10MW79A	0413H008	3/25/04	VOLATILES	1,2,4-TRICHLOROBENZENE	0.5	µg/l	U						
IR10MW79A	0413H008	3/25/04	VOLATILES	1,2-DIBROMO-3-CHLOROPROPANE	2	µg/l	U						
IR10MW79A	0413H008	3/25/04	VOLATILES	1,2-DICHLOROBENZENE	0.5	µg/l	U						
IR10MW79A	0413H008	3/25/04	VOLATILES	1,2-DICHLOROETHANE	0.5	µg/l	U						
IR10MW79A	0413H008	3/25/04	VOLATILES	1,2-DICHLOROPROPANE	0.5	µg/l	U						
IR10MW79A	0413H008	3/25/04	VOLATILES	1,3-DICHLOROBENZENE	0.5	µg/l	U						
IR10MW79A	0413H008	3/25/04	VOLATILES	1,4-DICHLOROBENZENE	0.5	µg/l	U						
IR10MW79A	0413H008	3/25/04	VOLATILES	BENZENE	0.5	µg/l	U						
IR10MW79A	0413H008	3/25/04	VOLATILES	BROMOBENZENE	0.5	µg/l	U						
IR10MW79A	0413H008	3/25/04	VOLATILES	BROMODICHLOROMETHANE	0.5	µg/l	U						
IR10MW79A	0413H008	3/25/04	VOLATILES	BROMOFORM	0.5	µg/l	U						
IR10MW79A	0413H008	3/25/04	VOLATILES	BROMOMETHANE	1	µg/l	U						
IR10MW79A	0413H008	3/25/04	VOLATILES	CARBON TETRACHLORIDE	0.5	µg/l	U						
IR10MW79A	0413H008	3/25/04	VOLATILES	CHLOROBENZENE	0.5	µg/l	U						

SUMMARY OR ANALYTICAL RESULTS
Seventeeth Quarterly Groundwater Sampling Report - Parcel B
Hunters Point Shipyard
San Francisco, California

Well ID	Sample Number	Sample Date	Analytical Method	Analyte	Result	UNITS	Lab Qual	Valid Code	POC Trigger	SentinelTrigger	VOC Trigger	Utility Line Trigger	Other Well Trigger Level
IR10MW79A	0413H008	3/25/04	VOLATILES	CHLOROETHANE	0.5	µg/l	U						
IR10MW79A	0413H008	3/25/04	VOLATILES	CHLOROFORM	0.5	µg/l	U						
IR10MW79A	0413H008	3/25/04	VOLATILES	CHLOROMETHANE	0.5	µg/l	U						
IR10MW79A	0413H008	3/25/04	VOLATILES	cis-1,2-DICHLOROETHENE	0.5	µg/l	U						
IR10MW79A	0413H008	3/25/04	VOLATILES	cis-1,3-DICHLOROPROPENE	0.5	µg/l	U						
IR10MW79A	0413H008	3/25/04	VOLATILES	DIBROMOCHLOROMETHANE	0.5	µg/l	U						
IR10MW79A	0413H008	3/25/04	VOLATILES	DIBROMOMETHANE	0.5	µg/l	U						
IR10MW79A	0413H008	3/25/04	VOLATILES	DICHLORODIFLUOROMETHANE	1	µg/l	U						
IR10MW79A	0413H008	3/25/04	VOLATILES	ETHYL BENZENE	0.5	µg/l	U						
IR10MW79A	0413H008	3/25/04	VOLATILES	FREON 113	0.5	µg/l	U						
IR10MW79A	0413H008	3/25/04	VOLATILES	METHYL tert-BUTYL ETHER	0.5	µg/l	U						
IR10MW79A	0413H008	3/25/04	VOLATILES	METHYLENE CHLORIDE	5	µg/l	U						
IR10MW79A	0413H008	3/25/04	VOLATILES	TETRACHLOROETHENE	0.5	µg/l	U						
IR10MW79A	0413H008	3/25/04	VOLATILES	TOLUENE	0.5	µg/l	U						
IR10MW79A	0413H008	3/25/04	VOLATILES	trans-1,2-DICHLOROETHENE	0.5	µg/l	U						
IR10MW79A	0413H008	3/25/04	VOLATILES	trans-1,3-DICHLOROPROPENE	0.5	µg/l	U						
IR10MW79A	0413H008	3/25/04	VOLATILES	TRICHLOROETHENE	0.5	µg/l	U						
IR10MW79A	0413H008	3/25/04	VOLATILES	TRICHLOROFLUOROMETHANE	0.5	µg/l	U						
IR10MW79A	0413H008	3/25/04	VOLATILES	VINYL CHLORIDE	0.5	µg/l	U						
IR10MW79A	0413H008	3/25/04	VOLATILES	XYLENES	0.5	µg/l	U						
IR10MW80A	0414T007	3/30/04	VOLATILES	1,1,1,2-TETRACHLOROETHANE	0.5	µg/l	U						
IR10MW80A	0414T007	3/30/04	VOLATILES	1,1,1-TRICHLOROETHANE	0.5	µg/l	U						
IR10MW80A	0414T007	3/30/04	VOLATILES	1,1,2,2-TETRACHLOROETHANE	0.5	µg/l	U						
IR10MW80A	0414T007	3/30/04	VOLATILES	1,1,2-TRICHLOROETHANE	0.5	µg/l	U						
IR10MW80A	0414T007	3/30/04	VOLATILES	1,1-DICHLOROETHANE	1	µg/l	U						
IR10MW80A	0414T007	3/30/04	VOLATILES	1,1-DICHLOROETHENE	0.5	µg/l	U						
IR10MW80A	0414T007	3/30/04	VOLATILES	1,2,3-TRICHLOROPROPANE	1	µg/l	U						
IR10MW80A	0414T007	3/30/04	VOLATILES	1,2,4-TRICHLOROBENZENE	0.5	µg/l	U						
IR10MW80A	0414T007	3/30/04	VOLATILES	1,2-DIBROMO-3-CHLOROPROPANE	2	µg/l	U						
IR10MW80A	0414T007	3/30/04	VOLATILES	1,2-DICHLOROBENZENE	0.5	µg/l	U						
IR10MW80A	0414T007	3/30/04	VOLATILES	1,2-DICHLOROETHANE	0.5	µg/l	U						
IR10MW80A	0414T007	3/30/04	VOLATILES	1,2-DICHLOROPROPANE	0.5	µg/l	U						
IR10MW80A	0414T007	3/30/04	VOLATILES	1,3-DICHLOROBENZENE	0.5	µg/l	U						
IR10MW80A	0414T007	3/30/04	VOLATILES	1,4-DICHLOROBENZENE	0.5	µg/l	U						
IR10MW80A	0414T007	3/30/04	VOLATILES	BENZENE	0.5	µg/l	U						
IR10MW80A	0414T007	3/30/04	VOLATILES	BROMOBENZENE	0.5	µg/l	U						
IR10MW80A	0414T007	3/30/04	VOLATILES	BROMODICHLOROMETHANE	0.5	µg/l	U						
IR10MW80A	0414T007	3/30/04	VOLATILES	BROMOFORM	0.5	µg/l	U						
IR10MW80A	0414T007	3/30/04	VOLATILES	BROMOMETHANE	1	µg/l	U						
IR10MW80A	0414T007	3/30/04	VOLATILES	CARBON TETRACHLORIDE	0.5	µg/l	U						
IR10MW80A	0414T007	3/30/04	VOLATILES	CHLOROBENZENE	0.5	µg/l	U						
IR10MW80A	0414T007	3/30/04	VOLATILES	CHLOROETHANE	0.5	µg/l	U						
IR10MW80A	0414T007	3/30/04	VOLATILES	CHLOROFORM	0.5	µg/l	U						
IR10MW80A	0414T007	3/30/04	VOLATILES	CHLOROMETHANE	0.5	µg/l	U						
IR10MW80A	0414T007	3/30/04	VOLATILES	cis-1,2-DICHLOROETHENE	0.5	µg/l	U						
IR10MW80A	0414T007	3/30/04	VOLATILES	cis-1,3-DICHLOROPROPENE	0.5	µg/l	U						
IR10MW80A	0414T007	3/30/04	VOLATILES	DIBROMOCHLOROMETHANE	0.5	µg/l	U						
IR10MW80A	0414T007	3/30/04	VOLATILES	DIBROMOMETHANE	0.5	µg/l	U						
IR10MW80A	0414T007	3/30/04	VOLATILES	DICHLORODIFLUOROMETHANE	1	µg/l	U						
IR10MW80A	0414T007	3/30/04	VOLATILES	ETHYL BENZENE	0.5	µg/l	U						
IR10MW80A	0414T007	3/30/04	VOLATILES	FREON 113	0.5	µg/l	U						
IR10MW80A	0414T007	3/30/04	VOLATILES	METHYL tert-BUTYL ETHER	0.5	µg/l	U						
IR10MW80A	0414T007	3/30/04	VOLATILES	METHYLENE CHLORIDE	5	µg/l	U						
IR10MW80A	0414T007	3/30/04	VOLATILES	TETRACHLOROETHENE	0.5	µg/l	U						
IR10MW80A	0414T007	3/30/04	VOLATILES	TOLUENE	0.5	µg/l	U						
IR10MW80A	0414T007	3/30/04	VOLATILES	trans-1,2-DICHLOROETHENE	0.5	µg/l	U						
IR10MW80A	0414T007	3/30/04	VOLATILES	trans-1,3-DICHLOROPROPENE	0.5	µg/l	U						
IR10MW80A	0414T007	3/30/04	VOLATILES	TRICHLOROETHENE	0.5	µg/l	U						

SUMMARY OR ANALYTICAL RESULTS
Seventeeth Quarterly Groundwater Sampling Report - Parcel B
Hunters Point Shipyard
San Francisco, California

Well ID	Sample Number	Sample Date	Analytical Method	Analyte	Result	UNITS	Lab Qual	Valid Code	POC Trigger	SentinelTrigger	VOC Trigger	Utility Line Trigger	Other Well Trigger Level
IR10MW80A	0414T007	3/30/04	VOLATILES	TRICHLOROFLUOROMETHANE	0.5	µg/l	U						
IR10MW80A	0414T007	3/30/04	VOLATILES	VINYL CHLORIDE	0.5	µg/l	U						
IR10MW80A	0414T007	3/30/04	VOLATILES	XYLENES	0.5	µg/l	U						
IR18MW21A	0413M009	3/25/04	FUELS	DIESEL	50	µg/l	U						
IR18MW21A	0413M009	3/25/04	FUELS	GASOLINE	20	µg/l	U						
IR18MW21A	0413M009	3/25/04	FUELS	MOTOR OIL	270	µg/l	J	J					
IR18MW21A	0413M009	3/25/04	INORGANICS	HEXAVALENT CHROMIUM	20	µg/l	U						
IR18MW21A	0413M009	3/25/04	INORGANICS	TOTAL SUSPENDED SOLIDS	10.0	mg/l	U						
IR18MW21A	0413M009	3/25/04	METALS	ALUMINUM	200	µg/l	U						
IR18MW21A	0413M009	3/25/04	METALS	ANTIMONY	3.3	µg/l	J	U1	500				
IR18MW21A	0413M009	3/25/04	METALS	ARSENIC	10	µg/l	U		36				
IR18MW21A	0413M009	3/25/04	METALS	BARIUM	197	µg/l	J	J4	504				
IR18MW21A	0413M009	3/25/04	METALS	BERYLLIUM	5	µg/l	U		1.4				
IR18MW21A	0413M009	3/25/04	METALS	CADMIUM	5	µg/l	U		9.3				
IR18MW21A	0413M009	3/25/04	METALS	CALCIUM	142000	µg/l	E	CJ83					
IR18MW21A	0413M009	3/25/04	METALS	CALCIUM	150000	µg/l	D	J3					
IR18MW21A	0413M009	3/25/04	METALS	CHROMIUM	10	µg/l	U		15.7				
IR18MW21A	0413M009	3/25/04	METALS	COBALT	50	µg/l	U		20.8				
IR18MW21A	0413M009	3/25/04	METALS	COPPER	25	µg/l	U		28				
IR18MW21A	0413M009	3/25/04	METALS	IRON	139	µg/l							
IR18MW21A	0413M009	3/25/04	METALS	LEAD	10	µg/l	U		14.4				
IR18MW21A	0413M009	3/25/04	METALS	MAGNESIUM	67800	µg/l		J3					
IR18MW21A	0413M009	3/25/04	METALS	MANGANESE	1200	µg/l			8,140				
IR18MW21A	0413M009	3/25/04	METALS	MERCURY	0.15	µg/l	J	U1	0.60				
IR18MW21A	0413M009	3/25/04	METALS	NICKEL	40	µg/l	U		96.5				
IR18MW21A	0413M009	3/25/04	METALS	POTASSIUM	8890	µg/l		J3					
IR18MW21A	0413M009	3/25/04	METALS	SELENIUM	35	µg/l	U						
IR18MW21A	0413M009	3/25/04	METALS	SILVER	10	µg/l	U		7.43				
IR18MW21A	0413M009	3/25/04	METALS	SODIUM	84800	µg/l	E	CJ83					
IR18MW21A	0413M009	3/25/04	METALS	SODIUM	82900	µg/l	D	J3					
IR18MW21A	0413M009	3/25/04	METALS	THALLIUM	25	µg/l	U	UJ3	13				
IR18MW21A	0413M009	3/25/04	METALS	VANADIUM	1.2	µg/l	J	J					
IR18MW21A	0413M009	3/25/04	METALS	ZINC	60	µg/l	U		81				
IR18MW21A	0413M009	3/25/04	PESTICIDES	4,4'-DDD	0.02	µg/l	U						
IR18MW21A	0413M009	3/25/04	PESTICIDES	4,4'-DDE	0.02	µg/l	U						
IR18MW21A	0413M009	3/25/04	PESTICIDES	4,4'-DDT	0.02	µg/l	U						
IR18MW21A	0413M009	3/25/04	PESTICIDES	ALDRIN	0.01	µg/l	U						
IR18MW21A	0413M009	3/25/04	PESTICIDES	alpha-BHC	0.01	µg/l	U						
IR18MW21A	0413M009	3/25/04	PESTICIDES	alpha-CHLORDANE	0.01	µg/l	U						
IR18MW21A	0413M009	3/25/04	PESTICIDES	AROCLOR-1016	0.2	µg/l	U		0.19				
IR18MW21A	0413M009	3/25/04	PESTICIDES	AROCLOR-1221	0.4	µg/l	U		0.19				
IR18MW21A	0413M009	3/25/04	PESTICIDES	AROCLOR-1232	0.2	µg/l	U		0.19				
IR18MW21A	0413M009	3/25/04	PESTICIDES	AROCLOR-1242	0.2	µg/l	U		0.19				
IR18MW21A	0413M009	3/25/04	PESTICIDES	AROCLOR-1248	0.2	µg/l	U		0.19				
IR18MW21A	0413M009	3/25/04	PESTICIDES	AROCLOR-1254	0.2	µg/l	U		0.19				
IR18MW21A	0413M009	3/25/04	PESTICIDES	AROCLOR-1260	0.2	µg/l	U		0.19				
IR18MW21A	0413M009	3/25/04	PESTICIDES	beta-BHC	0.01	µg/l	U	UJ7					
IR18MW21A	0413M009	3/25/04	PESTICIDES	delta-BHC	0.01	µg/l	U						
IR18MW21A	0413M009	3/25/04	PESTICIDES	DIELDRIN	0.02	µg/l	U						
IR18MW21A	0413M009	3/25/04	PESTICIDES	ENDOSULFAN I	0.01	µg/l	U						
IR18MW21A	0413M009	3/25/04	PESTICIDES	ENDOSULFAN II	0.02	µg/l	U						
IR18MW21A	0413M009	3/25/04	PESTICIDES	ENDOSULFAN SULFATE	0.02	µg/l	U						
IR18MW21A	0413M009	3/25/04	PESTICIDES	ENDRIN	0.02	µg/l	U						
IR18MW21A	0413M009	3/25/04	PESTICIDES	ENDRIN ALDEHYDE	0.02	µg/l	U	UJ7					
IR18MW21A	0413M009	3/25/04	PESTICIDES	ENDRIN KETONE	0.02	µg/l	U						
IR18MW21A	0413M009	3/25/04	PESTICIDES	gamma-BHC (LINDANE)	0.01	µg/l	U						
IR18MW21A	0413M009	3/25/04	PESTICIDES	gamma-CHLORDANE	0.01	µg/l	U						
IR18MW21A	0413M009	3/25/04	PESTICIDES	HEPTACHLOR	0.01	µg/l	U						

SUMMARY OR ANALYTICAL RESULTS
Seventeeth Quarterly Groundwater Sampling Report - Parcel B
Hunters Point Shipyard
San Francisco, California

Well ID	Sample Number	Sample Date	Analytical Method	Analyte	Result	UNITS	Lab Qual	Valid Code	POC Trigger	SentinelTrigger	VOC Trigger	Utility Line Trigger	Other Well Trigger Level
IR18MW21A	0413M009	3/25/04	PESTICIDES	HEPTACHLOR EPOXIDE	0.01	µg/l	U						
IR18MW21A	0413M009	3/25/04	PESTICIDES	METHOXYCHLOR	0.1	µg/l	U						
IR18MW21A	0413M009	3/25/04	PESTICIDES	TOXAPHENE	1	µg/l	U						
IR18MW21A	0413M009	3/25/04	SEMI-VOLATILES	1,1'-BIPHENYL	10	µg/l	U						
IR18MW21A	0413M009	3/25/04	SEMI-VOLATILES	2,4,5-TRICHLOROPHENOL	25	µg/l	U						
IR18MW21A	0413M009	3/25/04	SEMI-VOLATILES	2,4,6-TRICHLOROPHENOL	10	µg/l	U						
IR18MW21A	0413M009	3/25/04	SEMI-VOLATILES	2,4-DICHLOROPHENOL	10	µg/l	U						
IR18MW21A	0413M009	3/25/04	SEMI-VOLATILES	2,4-DIMETHYLPHENOL	10	µg/l	U						
IR18MW21A	0413M009	3/25/04	SEMI-VOLATILES	2,4-DINITROPHENOL	25	µg/l	U						
IR18MW21A	0413M009	3/25/04	SEMI-VOLATILES	2,4-DINITROTOLUENE	10	µg/l	U						
IR18MW21A	0413M009	3/25/04	SEMI-VOLATILES	2,6-DINITROTOLUENE	10	µg/l	U						
IR18MW21A	0413M009	3/25/04	SEMI-VOLATILES	2-CHLORONAPHTHALENE	10	µg/l	U						
IR18MW21A	0413M009	3/25/04	SEMI-VOLATILES	2-CHLOROPHENOL	10	µg/l	U						
IR18MW21A	0413M009	3/25/04	SEMI-VOLATILES	2-METHYLNAPHTHALENE	10	µg/l	U						
IR18MW21A	0413M009	3/25/04	SEMI-VOLATILES	2-METHYLPHENOL	10	µg/l	U						
IR18MW21A	0413M009	3/25/04	SEMI-VOLATILES	2-NITROANILINE	25	µg/l	U						
IR18MW21A	0413M009	3/25/04	SEMI-VOLATILES	2-NITROPHENOL	10	µg/l	U						
IR18MW21A	0413M009	3/25/04	SEMI-VOLATILES	3,3'-DICHLOROBENZIDINE	10	µg/l	U						
IR18MW21A	0413M009	3/25/04	SEMI-VOLATILES	3-NITROANILINE	25	µg/l	U						
IR18MW21A	0413M009	3/25/04	SEMI-VOLATILES	4,6-DINITRO-2-METHYLPHENOL	25	µg/l	U						
IR18MW21A	0413M009	3/25/04	SEMI-VOLATILES	4-BROMOPHENYL PHENYL ETHER	10	µg/l	U						
IR18MW21A	0413M009	3/25/04	SEMI-VOLATILES	4-CHLORO-3-METHYLPHENOL	10	µg/l	U						
IR18MW21A	0413M009	3/25/04	SEMI-VOLATILES	4-CHLOROANILINE	10	µg/l	U						
IR18MW21A	0413M009	3/25/04	SEMI-VOLATILES	4-CHLOROPHENYL PHENYL ETHER	10	µg/l	U						
IR18MW21A	0413M009	3/25/04	SEMI-VOLATILES	4-METHYLPHENOL	10	µg/l	U						
IR18MW21A	0413M009	3/25/04	SEMI-VOLATILES	4-NITROANILINE	25	µg/l	U						
IR18MW21A	0413M009	3/25/04	SEMI-VOLATILES	4-NITROPHENOL	25	µg/l	U						
IR18MW21A	0413M009	3/25/04	SEMI-VOLATILES	ACENAPHTHENE	10	µg/l	U		300				
IR18MW21A	0413M009	3/25/04	SEMI-VOLATILES	ACENAPHTHYLENE	10	µg/l	U		300				
IR18MW21A	0413M009	3/25/04	SEMI-VOLATILES	ACETOPHENONE	10	µg/l	U						
IR18MW21A	0413M009	3/25/04	SEMI-VOLATILES	ANTHRACENE	10	µg/l	U		300				
IR18MW21A	0413M009	3/25/04	SEMI-VOLATILES	ATRAZINE	10	µg/l	U						
IR18MW21A	0413M009	3/25/04	SEMI-VOLATILES	BENZ(a)ANTHRACENE	10	µg/l	U		300				
IR18MW21A	0413M009	3/25/04	SEMI-VOLATILES	BENZALDEHYDE	10	µg/l	U						
IR18MW21A	0413M009	3/25/04	SEMI-VOLATILES	BENZO(a)PYRENE	10	µg/l	U		300				
IR18MW21A	0413M009	3/25/04	SEMI-VOLATILES	BENZO(b)FLUORANTHENE	10	µg/l	U		300				
IR18MW21A	0413M009	3/25/04	SEMI-VOLATILES	BENZO(ghi)PERYLENE	10	µg/l	U		300				
IR18MW21A	0413M009	3/25/04	SEMI-VOLATILES	BENZO(k)FLUORANTHENE	10	µg/l	U		300				
IR18MW21A	0413M009	3/25/04	SEMI-VOLATILES	BIS(2-CHLOROETHOXY)METHANE	10	µg/l	U						
IR18MW21A	0413M009	3/25/04	SEMI-VOLATILES	BIS(2-CHLOROETHYL)ETHER	10	µg/l	U						
IR18MW21A	0413M009	3/25/04	SEMI-VOLATILES	BIS(2-ETHYLHEXYL)PHTHALATE	10	µg/l	U						
IR18MW21A	0413M009	3/25/04	SEMI-VOLATILES	BUTYL BENZYL PHTHALATE	10	µg/l	U						
IR18MW21A	0413M009	3/25/04	SEMI-VOLATILES	CAPROLACTAM	10	µg/l	U						
IR18MW21A	0413M009	3/25/04	SEMI-VOLATILES	CARBAZOLE	10	µg/l	U						
IR18MW21A	0413M009	3/25/04	SEMI-VOLATILES	CHRYSENE	10	µg/l	U						
IR18MW21A	0413M009	3/25/04	SEMI-VOLATILES	DIBENZ(a,h)ANTHRACENE	10	µg/l	U		300				
IR18MW21A	0413M009	3/25/04	SEMI-VOLATILES	DIBENZOFURAN	10	µg/l	U						
IR18MW21A	0413M009	3/25/04	SEMI-VOLATILES	DIETHYL PHTHALATE	10	µg/l	U						
IR18MW21A	0413M009	3/25/04	SEMI-VOLATILES	DIMETHYL PHTHALATE	10	µg/l	U						
IR18MW21A	0413M009	3/25/04	SEMI-VOLATILES	DI-n-BUTYL PHTHALATE	10	µg/l	U						
IR18MW21A	0413M009	3/25/04	SEMI-VOLATILES	DI-n-OCTYL PHTHALATE	10	µg/l	U						
IR18MW21A	0413M009	3/25/04	SEMI-VOLATILES	FLUORANTHENE	10	µg/l	U		300				
IR18MW21A	0413M009	3/25/04	SEMI-VOLATILES	FLUORENE	10	µg/l	U		300				
IR18MW21A	0413M009	3/25/04	SEMI-VOLATILES	HEXACHLOROBENZENE	10	µg/l	U						
IR18MW21A	0413M009	3/25/04	SEMI-VOLATILES	HEXACHLOROBUTADIENE	10	µg/l	U						
IR18MW21A	0413M009	3/25/04	SEMI-VOLATILES	HEXACHLOROCYCLOPENTADIENE	10	µg/l	U						
IR18MW21A	0413M009	3/25/04	SEMI-VOLATILES	HEXACHLOROETHANE	10	µg/l	U						
IR18MW21A	0413M009	3/25/04	SEMI-VOLATILES	INDENO(1,2,3-cd)PYRENE	10	µg/l	U		300				

SUMMARY OR ANALYTICAL RESULTS
Seventeeth Quarterly Groundwater Sampling Report - Parcel B
Hunters Point Shipyard
San Francisco, California

Well ID	Sample Number	Sample Date	Analytical Method	Analyte	Result	UNITS	Lab Qual	Valid Code	POC Trigger	SentinelTrigger	VOC Trigger	Utility Line Trigger	Other Well Trigger Level
IR18MW21A	0413M009	3/25/04	SEMI-VOLATILES	ISOPHORONE	10	µg/l	U						
IR18MW21A	0413M009	3/25/04	SEMI-VOLATILES	NAPHTHALENE	10	µg/l	U		300				
IR18MW21A	0413M009	3/25/04	SEMI-VOLATILES	NITROBENZENE	10	µg/l	U						
IR18MW21A	0413M009	3/25/04	SEMI-VOLATILES	N-NITROSODI-n-PROPYLAMINE	10	µg/l	U						
IR18MW21A	0413M009	3/25/04	SEMI-VOLATILES	N-NITROSODIPHENYLAMINE	10	µg/l	U						
IR18MW21A	0413M009	3/25/04	SEMI-VOLATILES	PENTACHLOROPHENOL	25	µg/l	U						
IR18MW21A	0413M009	3/25/04	SEMI-VOLATILES	PHENANTHRENE	10	µg/l	U		300				
IR18MW21A	0413M009	3/25/04	SEMI-VOLATILES	PHENOL	10	µg/l	U						
IR18MW21A	0413M009	3/25/04	SEMI-VOLATILES	PROPANE, 2,2'-OXYBIS[1-CHLORO-	10	µg/l	U						
IR18MW21A	0413M009	3/25/04	SEMI-VOLATILES	PYRENE	10	µg/l	U						
IR18MW21A	0413M009	3/25/04	VOLATILES	1,1,1-TRICHLOROETHANE	0.5	µg/l	U						
IR18MW21A	0413M009	3/25/04	VOLATILES	1,1,2,2-TETRACHLOROETHANE	0.5	µg/l	U						
IR18MW21A	0413M009	3/25/04	VOLATILES	1,1,2-TRICHLORO-1,2,2-TRIFLUOROETHANE	0.5	µg/l	U						
IR18MW21A	0413M009	3/25/04	VOLATILES	1,1,2-TRICHLOROETHANE	0.5	µg/l	U						
IR18MW21A	0413M009	3/25/04	VOLATILES	1,1-DICHLOROETHANE	0.5	µg/l	U						
IR18MW21A	0413M009	3/25/04	VOLATILES	1,1-DICHLOROETHENE	0.5	µg/l	U						
IR18MW21A	0413M009	3/25/04	VOLATILES	1,2,3-TRICHLOROBENZENE	0.5	µg/l	U						
IR18MW21A	0413M009	3/25/04	VOLATILES	1,2,4-TRICHLOROBENZENE	0.5	µg/l	U						
IR18MW21A	0413M009	3/25/04	VOLATILES	1,2-DIBROMO-3-CHLOROPROPANE	1	µg/l	U						
IR18MW21A	0413M009	3/25/04	VOLATILES	1,2-DIBROMOETHANE	0.5	µg/l	U						
IR18MW21A	0413M009	3/25/04	VOLATILES	1,2-DICHLOROBENZENE	0.5	µg/l	U						
IR18MW21A	0413M009	3/25/04	VOLATILES	1,2-DICHLOROETHANE	0.5	µg/l	U						
IR18MW21A	0413M009	3/25/04	VOLATILES	1,2-DICHLOROPROPANE	0.5	µg/l	U						
IR18MW21A	0413M009	3/25/04	VOLATILES	1,3-DICHLOROBENZENE	0.5	µg/l	U						
IR18MW21A	0413M009	3/25/04	VOLATILES	1,4-DICHLOROBENZENE	0.33	µg/l	J	J					
IR18MW21A	0413M009	3/25/04	VOLATILES	2-BUTANONE	5	µg/l	U						
IR18MW21A	0413M009	3/25/04	VOLATILES	2-HEXANONE	5	µg/l	U						
IR18MW21A	0413M009	3/25/04	VOLATILES	4-METHYL-2-PENTANONE	5	µg/l	U						
IR18MW21A	0413M009	3/25/04	VOLATILES	ACETONE	5	µg/l	U	UJ7					
IR18MW21A	0413M009	3/25/04	VOLATILES	BENZENE	0.5	µg/l	U						
IR18MW21A	0413M009	3/25/04	VOLATILES	BROMOCHLOROMETHANE	0.5	µg/l	U						
IR18MW21A	0413M009	3/25/04	VOLATILES	BROMODICHLOROMETHANE	0.5	µg/l	U						
IR18MW21A	0413M009	3/25/04	VOLATILES	BROMOFORM	0.5	µg/l	U						
IR18MW21A	0413M009	3/25/04	VOLATILES	BROMOMETHANE	0.5	µg/l	U						
IR18MW21A	0413M009	3/25/04	VOLATILES	CARBON DISULFIDE	0.5	µg/l	U						
IR18MW21A	0413M009	3/25/04	VOLATILES	CARBON TETRACHLORIDE	0.5	µg/l	U						
IR18MW21A	0413M009	3/25/04	VOLATILES	CHLOROBENZENE	2.1	µg/l							
IR18MW21A	0413M009	3/25/04	VOLATILES	CHLOROETHANE	0.5	µg/l	U						
IR18MW21A	0413M009	3/25/04	VOLATILES	CHLOROFORM	0.5	µg/l	U						
IR18MW21A	0413M009	3/25/04	VOLATILES	CHLOROMETHANE	0.5	µg/l	U						
IR18MW21A	0413M009	3/25/04	VOLATILES	cis-1,2-DICHLOROETHENE	0.5	µg/l	U		85				
IR18MW21A	0413M009	3/25/04	VOLATILES	cis-1,3-DICHLOROPROPENE	0.5	µg/l	U						
IR18MW21A	0413M009	3/25/04	VOLATILES	CYCLOHEXANE	0.5	µg/l	U						
IR18MW21A	0413M009	3/25/04	VOLATILES	CYCLOHEXANE, METHYL-	0.5	µg/l	U						
IR18MW21A	0413M009	3/25/04	VOLATILES	DIBROMOCHLOROMETHANE	0.5	µg/l	U						
IR18MW21A	0413M009	3/25/04	VOLATILES	DICHLORODIFLUOROMETHANE	0.5	µg/l	U						
IR18MW21A	0413M009	3/25/04	VOLATILES	ETHYL BENZENE	0.5	µg/l	U						
IR18MW21A	0413M009	3/25/04	VOLATILES	ISOPROPYLBENZENE	0.5	µg/l	U						
IR18MW21A	0413M009	3/25/04	VOLATILES	METHYL ACETATE	0.5	µg/l	U	UJ7					
IR18MW21A	0413M009	3/25/04	VOLATILES	METHYL tert-BUTYL ETHER	0.5	µg/l	U						
IR18MW21A	0413M009	3/25/04	VOLATILES	METHYLENE CHLORIDE	0.5	µg/l		U4					
IR18MW21A	0413M009	3/25/04	VOLATILES	STYRENE	0.5	µg/l	U						
IR18MW21A	0413M009	3/25/04	VOLATILES	TETRACHLOROETHENE	0.5	µg/l	U						
IR18MW21A	0413M009	3/25/04	VOLATILES	TOLUENE	0.5	µg/l	U						
IR18MW21A	0413M009	3/25/04	VOLATILES	trans-1,2-DICHLOROETHENE	0.5	µg/l	U		85				
IR18MW21A	0413M009	3/25/04	VOLATILES	trans-1,3-DICHLOROPROPENE	0.5	µg/l	U						
IR18MW21A	0413M009	3/25/04	VOLATILES	TRICHLOROETHENE	0.5	µg/l	U		114				
IR18MW21A	0413M009	3/25/04	VOLATILES	TRICHLOROFLUOROMETHANE	0.5	µg/l	U						

SUMMARY OR ANALYTICAL RESULTS
Seventeeth Quarterly Groundwater Sampling Report - Parcel B
Hunters Point Shipyard
San Francisco, California

Well ID	Sample Number	Sample Date	Analytical Method	Analyte	Result	UNITS	Lab Qual	Valid Code	POC Trigger	SentinelTrigger	VOC Trigger	Utility Line Trigger	Other Well Trigger Level
IR18MW21A	0413M009	3/25/04	VOLATILES	VINYL CHLORIDE	0.5	µg/l	U		55				
IR18MW21A	0413M009	3/25/04	VOLATILES	XYLENES (TOTAL)	0.5	µg/l	U						
IR25MW17A	0414H009	3/29/04	FUELS	DIESEL	50	µg/l	U						
IR25MW17A	0414H009	3/29/04	FUELS	GASOLINE	20	µg/l	U						
IR25MW17A	0414H009	3/29/04	FUELS	MOTOR OIL	500	µg/l	U						
IR25MW17A	0414H009	3/29/04	INORGANICS	HEXAVALENT CHROMIUM	20	µg/l	U						
IR25MW17A	0414H009	3/29/04	INORGANICS	TOTAL SUSPENDED SOLIDS	10.0	mg/l	U						
IR25MW17A	0414H009	3/29/04	METALS	ALUMINUM	93.7	µg/l	J	U1					
IR25MW17A	0414H009	3/29/04	METALS	ANTIMONY	9.4	µg/l	J	U1J9		5,000			
IR25MW17A	0414H009	3/29/04	METALS	ARSENIC	10	µg/l	U	R2		360			
IR25MW17A	0414H009	3/29/04	METALS	BARIUM	60.6	µg/l	J	J		5,040			
IR25MW17A	0414H009	3/29/04	METALS	BERYLLIUM	5	µg/l	U	UJ9		14			
IR25MW17A	0414H009	3/29/04	METALS	CADMIUM	5	µg/l	U			93			
IR25MW17A	0414H009	3/29/04	METALS	CALCIUM	142000	µg/l	E	CJ83					
IR25MW17A	0414H009	3/29/04	METALS	CALCIUM	156000	µg/l	D	J3					
IR25MW17A	0414H009	3/29/04	METALS	CHROMIUM	10	µg/l	U			157			
IR25MW17A	0414H009	3/29/04	METALS	COBALT	11.4	µg/l	J	J		208			
IR25MW17A	0414H009	3/29/04	METALS	COPPER	9.1	µg/l	J	U1J3		280			
IR25MW17A	0414H009	3/29/04	METALS	IRON	316	µg/l		U2					
IR25MW17A	0414H009	3/29/04	METALS	LEAD	2.3	µg/l	J	J9		144			
IR25MW17A	0414H009	3/29/04	METALS	MAGNESIUM	933000	µg/l	E	CJ83					
IR25MW17A	0414H009	3/29/04	METALS	MAGNESIUM	1100000	µg/l	D	J3					
IR25MW17A	0414H009	3/29/04	METALS	MANGANESE	7380	µg/l				81,400			
IR25MW17A	0414H009	3/29/04	METALS	MERCURY	0.2	µg/l	U			6			
IR25MW17A	0414H009	3/29/04	METALS	NICKEL	70.8	µg/l				965			
IR25MW17A	0414H009	3/29/04	METALS	POTASSIUM	1070	µg/l	J	J3					
IR25MW17A	0414H009	3/29/04	METALS	SELENIUM	9.2	µg/l	J	J					
IR25MW17A	0414H009	3/29/04	METALS	SILVER	10	µg/l	U			74.3			
IR25MW17A	0414H009	3/29/04	METALS	SODIUM	212000	µg/l	E	CJ83					
IR25MW17A	0414H009	3/29/04	METALS	SODIUM	218000	µg/l	D	J3					
IR25MW17A	0414H009	3/29/04	METALS	THALLIUM	25	µg/l	U			130			
IR25MW17A	0414H009	3/29/04	METALS	VANADIUM	5.2	µg/l	J	J					
IR25MW17A	0414H009	3/29/04	METALS	ZINC	60	µg/l	U	UJ3		810			
IR25MW17A	0414H009	3/29/04	VOLATILES	1,1,1-TRICHLOROETHANE	0.5	µg/l	U						
IR25MW17A	0414H009	3/29/04	VOLATILES	1,1,2,2-TETRACHLOROETHANE	0.5	µg/l	U						
IR25MW17A	0414H009	3/29/04	VOLATILES	1,1,2-TRICHLORO-1,2,2-TRIFLUOROETHANE	0.5	µg/l	U						
IR25MW17A	0414H009	3/29/04	VOLATILES	1,1,2-TRICHLOROETHANE	0.5	µg/l	U						
IR25MW17A	0414H009	3/29/04	VOLATILES	1,1-DICHLOROETHANE	0.5	µg/l	U						
IR25MW17A	0414H009	3/29/04	VOLATILES	1,1-DICHLOROETHENE	0.5	µg/l	U						
IR25MW17A	0414H009	3/29/04	VOLATILES	1,2,3-TRICHLOROBENZENE	0.5	µg/l	U						
IR25MW17A	0414H009	3/29/04	VOLATILES	1,2,4-TRICHLOROBENZENE	0.5	µg/l	U						
IR25MW17A	0414H009	3/29/04	VOLATILES	1,2-DIBROMO-3-CHLOROPROPANE	1	µg/l	U						
IR25MW17A	0414H009	3/29/04	VOLATILES	1,2-DIBROMOETHANE	0.5	µg/l	U						
IR25MW17A	0414H009	3/29/04	VOLATILES	1,2-DICHLOROBENZENE	0.5	µg/l	U						
IR25MW17A	0414H009	3/29/04	VOLATILES	1,2-DICHLOROETHANE	2.4	µg/l							
IR25MW17A	0414H009	3/29/04	VOLATILES	1,2-DICHLOROPROPANE	0.5	µg/l	U						
IR25MW17A	0414H009	3/29/04	VOLATILES	1,3-DICHLOROBENZENE	0.5	µg/l	U						
IR25MW17A	0414H009	3/29/04	VOLATILES	1,4-DICHLOROBENZENE	0.5	µg/l	U						
IR25MW17A	0414H009	3/29/04	VOLATILES	2-BUTANONE	5	µg/l	U						
IR25MW17A	0414H009	3/29/04	VOLATILES	2-HEXANONE	5	µg/l	U						
IR25MW17A	0414H009	3/29/04	VOLATILES	4-METHYL-2-PENTANONE	5	µg/l	U						
IR25MW17A	0414H009	3/29/04	VOLATILES	ACETONE	5	µg/l	U	UJ7					
IR25MW17A	0414H009	3/29/04	VOLATILES	BENZENE	0.5	µg/l	U						
IR25MW17A	0414H009	3/29/04	VOLATILES	BROMOCHLOROMETHANE	0.5	µg/l	U						
IR25MW17A	0414H009	3/29/04	VOLATILES	BROMODICHLOROMETHANE	0.5	µg/l	U						
IR25MW17A	0414H009	3/29/04	VOLATILES	BROMOFORM	0.5	µg/l	U						
IR25MW17A	0414H009	3/29/04	VOLATILES	BROMOMETHANE	0.5	µg/l	U						
IR25MW17A	0414H009	3/29/04	VOLATILES	CARBON DISULFIDE	0.5	µg/l	U						

SUMMARY OR ANALYTICAL RESULTS
Seventeeth Quarterly Groundwater Sampling Report - Parcel B
Hunters Point Shipyard
San Francisco, California

Well ID	Sample Number	Sample Date	Analytical Method	Analyte	Result	UNITS	Lab Qual	Valid Code	POC Trigger	SentinelTrigger	VOC Trigger	Utility Line Trigger	Other Well Trigger Level
IR25MW17A	0414H009	3/29/04	VOLATILES	CARBON TETRACHLORIDE	0.5	µg/l	U						
IR25MW17A	0414H009	3/29/04	VOLATILES	CHLOROBENZENE	0.5	µg/l	U						
IR25MW17A	0414H009	3/29/04	VOLATILES	CHLOROETHANE	0.5	µg/l	U						
IR25MW17A	0414H009	3/29/04	VOLATILES	CHLOROFORM	0.5	µg/l	U						
IR25MW17A	0414H009	3/29/04	VOLATILES	CHLOROMETHANE	0.5	µg/l	U						
IR25MW17A	0414H009	3/29/04	VOLATILES	cis-1,2-DICHLOROETHENE	0.25	µg/l	J	J		85			
IR25MW17A	0414H009	3/29/04	VOLATILES	cis-1,3-DICHLOROPROPENE	0.5	µg/l	U						
IR25MW17A	0414H009	3/29/04	VOLATILES	CYCLOHEXANE	0.5	µg/l	U						
IR25MW17A	0414H009	3/29/04	VOLATILES	CYCLOHEXANE, METHYL-	0.5	µg/l	U						
IR25MW17A	0414H009	3/29/04	VOLATILES	DIBROMOCHLOROMETHANE	0.5	µg/l	U						
IR25MW17A	0414H009	3/29/04	VOLATILES	DICHLORODIFLUOROMETHANE	0.5	µg/l	U						
IR25MW17A	0414H009	3/29/04	VOLATILES	ETHYL BENZENE	0.5	µg/l	U						
IR25MW17A	0414H009	3/29/04	VOLATILES	ISOPROPYLBENZENE	0.5	µg/l	U						
IR25MW17A	0414H009	3/29/04	VOLATILES	METHYL ACETATE	0.5	µg/l	U						
IR25MW17A	0414H009	3/29/04	VOLATILES	METHYL tert-BUTYL ETHER	0.5	µg/l	U						
IR25MW17A	0414H009	3/29/04	VOLATILES	METHYLENE CHLORIDE	0.5	µg/l	U						
IR25MW17A	0414H009	3/29/04	VOLATILES	STYRENE	0.5	µg/l	U						
IR25MW17A	0414H009	3/29/04	VOLATILES	TETRACHLOROETHENE	0.5	µg/l	U						
IR25MW17A	0414H009	3/29/04	VOLATILES	TOLUENE	0.5	µg/l	U						
IR25MW17A	0414H009	3/29/04	VOLATILES	trans-1,2-DICHLOROETHENE	0.5	µg/l	U			85			
IR25MW17A	0414H009	3/29/04	VOLATILES	trans-1,3-DICHLOROPROPENE	0.5	µg/l	U						
IR25MW17A	0414H009	3/29/04	VOLATILES	TRICHLOROETHENE	0.5	µg/l	U			114			
IR25MW17A	0414H009	3/29/04	VOLATILES	TRICHLOROFLUOROMETHANE	2.3	µg/l							
IR25MW17A	0414H009	3/29/04	VOLATILES	VINYL CHLORIDE	0.5	µg/l	U			55			
IR25MW17A	0414H009	3/29/04	VOLATILES	XYLENES (TOTAL)	0.5	µg/l	U						
IR25MW37A	0414M018	3/30/04	VOLATILES	1,1,1-TRICHLOROETHANE	0.5	µg/l	U						
IR25MW37A	0414M018	3/30/04	VOLATILES	1,1,2,2-TETRACHLOROETHANE	0.5	µg/l	U						
IR25MW37A	0414M018	3/30/04	VOLATILES	1,1,2-TRICHLORO-1,2,2-TRIFLUOROETHANE	0.5	µg/l	U						
IR25MW37A	0414M018	3/30/04	VOLATILES	1,1,2-TRICHLOROETHANE	0.5	µg/l	U						
IR25MW37A	0414M018	3/30/04	VOLATILES	1,1-DICHLOROETHANE	0.5	µg/l	U						
IR25MW37A	0414M018	3/30/04	VOLATILES	1,1-DICHLOROETHENE	0.5	µg/l	U						
IR25MW37A	0414M018	3/30/04	VOLATILES	1,2,3-TRICHLOROBENZENE	0.5	µg/l	U						
IR25MW37A	0414M018	3/30/04	VOLATILES	1,2,4-TRICHLOROBENZENE	0.5	µg/l	U						
IR25MW37A	0414M018	3/30/04	VOLATILES	1,2-DIBROMO-3-CHLOROPROPANE	1	µg/l	U	UJ7					
IR25MW37A	0414M018	3/30/04	VOLATILES	1,2-DIBROMOETHANE	0.5	µg/l	U						
IR25MW37A	0414M018	3/30/04	VOLATILES	1,2-DICHLOROBENZENE	0.5	µg/l	U						
IR25MW37A	0414M018	3/30/04	VOLATILES	1,2-DICHLOROETHANE	0.5	µg/l	U						
IR25MW37A	0414M018	3/30/04	VOLATILES	1,2-DICHLOROPROPANE	0.5	µg/l	U						
IR25MW37A	0414M018	3/30/04	VOLATILES	1,3-DICHLOROBENZENE	0.5	µg/l	U						
IR25MW37A	0414M018	3/30/04	VOLATILES	1,4-DICHLOROBENZENE	0.5	µg/l	U						
IR25MW37A	0414M018	3/30/04	VOLATILES	2-BUTANONE	5	µg/l	U						
IR25MW37A	0414M018	3/30/04	VOLATILES	2-HEXANONE	5	µg/l	U						
IR25MW37A	0414M018	3/30/04	VOLATILES	4-METHYL-2-PENTANONE	5	µg/l	U						
IR25MW37A	0414M018	3/30/04	VOLATILES	ACETONE	5	µg/l	U	UJ7					
IR25MW37A	0414M018	3/30/04	VOLATILES	BENZENE	0.5	µg/l	U						
IR25MW37A	0414M018	3/30/04	VOLATILES	BROMOCHLOROMETHANE	0.5	µg/l	U						
IR25MW37A	0414M018	3/30/04	VOLATILES	BROMODICHLOROMETHANE	0.5	µg/l	U						
IR25MW37A	0414M018	3/30/04	VOLATILES	BROMOFORM	0.5	µg/l	U						
IR25MW37A	0414M018	3/30/04	VOLATILES	BROMOMETHANE	0.5	µg/l	U						
IR25MW37A	0414M018	3/30/04	VOLATILES	CARBON DISULFIDE	0.5	µg/l	U						
IR25MW37A	0414M018	3/30/04	VOLATILES	CARBON TETRACHLORIDE	0.5	µg/l	U						
IR25MW37A	0414M018	3/30/04	VOLATILES	CHLOROBENZENE	0.5	µg/l	U						
IR25MW37A	0414M018	3/30/04	VOLATILES	CHLOROETHANE	0.5	µg/l	U						
IR25MW37A	0414M018	3/30/04	VOLATILES	CHLOROFORM	0.5	µg/l	U						
IR25MW37A	0414M018	3/30/04	VOLATILES	CHLOROMETHANE	0.5	µg/l	U						
IR25MW37A	0414M018	3/30/04	VOLATILES	cis-1,2-DICHLOROETHENE	0.5	µg/l	U				85		
IR25MW37A	0414M018	3/30/04	VOLATILES	cis-1,3-DICHLOROPROPENE	0.5	µg/l	U						
IR25MW37A	0414M018	3/30/04	VOLATILES	CYCLOHEXANE	0.5	µg/l	U						

SUMMARY OR ANALYTICAL RESULTS
Seventeeth Quarterly Groundwater Sampling Report - Parcel B
Hunters Point Shipyard
San Francisco, California

Well ID	Sample Number	Sample Date	Analytical Method	Analyte	Result	UNITS	Lab Qual	Valid Code	POC Trigger	SentinelTrigger	VOC Trigger	Utility Line Trigger	Other Well Trigger Level
IR25MW37A	0414M018	3/30/04	VOLATILES	CYCLOHEXANE, METHYL-	0.5	µg/l	U						
IR25MW37A	0414M018	3/30/04	VOLATILES	DIBROMOCHLOROMETHANE	0.5	µg/l	U						
IR25MW37A	0414M018	3/30/04	VOLATILES	DICHLORODIFLUOROMETHANE	0.5	µg/l	U						
IR25MW37A	0414M018	3/30/04	VOLATILES	ETHYL BENZENE	0.5	µg/l	U						
IR25MW37A	0414M018	3/30/04	VOLATILES	ISOPROPYLBENZENE	0.5	µg/l	U						
IR25MW37A	0414M018	3/30/04	VOLATILES	METHYL ACETATE	0.5	µg/l	U	UJ7					
IR25MW37A	0414M018	3/30/04	VOLATILES	METHYL tert-BUTYL ETHER	0.5	µg/l	U						
IR25MW37A	0414M018	3/30/04	VOLATILES	METHYLENE CHLORIDE	0.5	µg/l	U						
IR25MW37A	0414M018	3/30/04	VOLATILES	STYRENE	0.5	µg/l	U						
IR25MW37A	0414M018	3/30/04	VOLATILES	TETRACHLOROETHENE	0.5	µg/l	U						
IR25MW37A	0414M018	3/30/04	VOLATILES	TOLUENE	0.5	µg/l	U						
IR25MW37A	0414M018	3/30/04	VOLATILES	trans-1,2-DICHLOROETHENE	0.5	µg/l	U				85		
IR25MW37A	0414M018	3/30/04	VOLATILES	trans-1,3-DICHLOROPROPENE	0.5	µg/l	U						
IR25MW37A	0414M018	3/30/04	VOLATILES	TRICHLOROETHENE	0.5	µg/l	U				114		
IR25MW37A	0414M018	3/30/04	VOLATILES	TRICHLOROFLUOROMETHANE	0.5	µg/l	U						
IR25MW37A	0414M018	3/30/04	VOLATILES	VINYL CHLORIDE	0.5	µg/l	U				55		
IR25MW37A	0414M018	3/30/04	VOLATILES	XYLENES (TOTAL)	0.5	µg/l	U						
IR26MW41A	0414M013	3/29/04	FUELS	DIESEL	50	µg/l	U						
IR26MW41A	0414M013	3/29/04	FUELS	GASOLINE	20	µg/l	U						
IR26MW41A	0414M013	3/29/04	FUELS	MOTOR OIL	500	µg/l	U						
IR26MW41A	0414M013	3/29/04	INORGANICS	HEXAVALENT CHROMIUM	20	µg/l	U						
IR26MW41A	0414M013	3/29/04	INORGANICS	TOTAL SUSPENDED SOLIDS	10.0	mg/l	U						
IR26MW41A	0414M013	3/29/04	METALS	ALUMINUM	27.2	µg/l	J						
IR26MW41A	0414M013	3/29/04	METALS	ANTIMONY	60	µg/l	U						
IR26MW41A	0414M013	3/29/04	METALS	ARSENIC	10	µg/l	U	R2	36				
IR26MW41A	0414M013	3/29/04	METALS	BARIUM	41	µg/l	J						
IR26MW41A	0414M013	3/29/04	METALS	BERYLLIUM	5	µg/l	U						
IR26MW41A	0414M013	3/29/04	METALS	CADMIUM	5	µg/l	U						
IR26MW41A	0414M013	3/29/04	METALS	CALCIUM	10300	µg/l							
IR26MW41A	0414M013	3/29/04	METALS	CHROMIUM	10	µg/l	U		15.7				
IR26MW41A	0414M013	3/29/04	METALS	COBALT	1.1	µg/l	J						
IR26MW41A	0414M013	3/29/04	METALS	COPPER	4.4	µg/l	J	U1J3	28				
IR26MW41A	0414M013	3/29/04	METALS	IRON	37.2	µg/l	J						
IR26MW41A	0414M013	3/29/04	METALS	LEAD	10	µg/l	U		14.4				
IR26MW41A	0414M013	3/29/04	METALS	MAGNESIUM	40200	µg/l							
IR26MW41A	0414M013	3/29/04	METALS	MANGANESE	245	µg/l			8,140				
IR26MW41A	0414M013	3/29/04	METALS	MERCURY	0.2	µg/l	U	U1J3	0.60				
IR26MW41A	0414M013	3/29/04	METALS	NICKEL	37.6	µg/l	J						
IR26MW41A	0414M013	3/29/04	METALS	POTASSIUM	1010	µg/l	J						
IR26MW41A	0414M013	3/29/04	METALS	SELENIUM	3.5	µg/l	J						
IR26MW41A	0414M013	3/29/04	METALS	SILVER	10	µg/l	U						
IR26MW41A	0414M013	3/29/04	METALS	SODIUM	138000	µg/l	E						
IR26MW41A	0414M013	3/29/04	METALS	THALLIUM	25	µg/l	U						
IR26MW41A	0414M013	3/29/04	METALS	VANADIUM	2.6	µg/l	J						
IR26MW41A	0414M013	3/29/04	METALS	ZINC	60	µg/l	U	UJ3	81				
IR26MW41A	0414M013	3/29/04	VOLATILES	1,1,1-TRICHLOROETHANE	0.5	µg/l	U						
IR26MW41A	0414M013	3/29/04	VOLATILES	1,1,2,2-TETRACHLOROETHANE	0.5	µg/l	U						
IR26MW41A	0414M013	3/29/04	VOLATILES	1,1,2-TRICHLORO-1,2,2-TRIFLUOROETHANE	30	µg/l							
IR26MW41A	0414M013	3/29/04	VOLATILES	1,1,2-TRICHLOROETHANE	0.5	µg/l	U						
IR26MW41A	0414M013	3/29/04	VOLATILES	1,1-DICHLOROETHANE	0.5	µg/l	U						
IR26MW41A	0414M013	3/29/04	VOLATILES	1,1-DICHLOROETHENE	0.5	µg/l	U						
IR26MW41A	0414M013	3/29/04	VOLATILES	1,2,3-TRICHLOROBENZENE	0.5	µg/l	U						
IR26MW41A	0414M013	3/29/04	VOLATILES	1,2,4-TRICHLOROBENZENE	0.5	µg/l	U						
IR26MW41A	0414M013	3/29/04	VOLATILES	1,2-DIBROMO-3-CHLOROPROPANE	1	µg/l	U						
IR26MW41A	0414M013	3/29/04	VOLATILES	1,2-DIBROMOETHANE	0.5	µg/l	U						
IR26MW41A	0414M013	3/29/04	VOLATILES	1,2-DICHLOROBENZENE	0.5	µg/l	U						
IR26MW41A	0414M013	3/29/04	VOLATILES	1,2-DICHLOROETHANE	0.5	µg/l	U						
IR26MW41A	0414M013	3/29/04	VOLATILES	1,2-DICHLOROPROPANE	0.5	µg/l	U						

SUMMARY OR AN. .ICAL RESULTS
Seventeeth Quarterly Groundwater Sampling Report - Parcel B
Hunters Point Shipyard
San Francisco, California

Well ID	Sample Number	Sample Date	Analytical Method	Analyte	Result	UNITS	Lab Qual	Valid Code	POC Trigger	SentinelTrigger	VOC Trigger	Utility Line Trigger	Other Well Trigger Level
IR26MW41A	0414M013	3/29/04	VOLATILES	1,3-DICHLOROBENZENE	0.5	µg/l	U						
IR26MW41A	0414M013	3/29/04	VOLATILES	1,4-DICHLOROBENZENE	0.5	µg/l	U						
IR26MW41A	0414M013	3/29/04	VOLATILES	2-BUTANONE	5	µg/l	U						
IR26MW41A	0414M013	3/29/04	VOLATILES	2-HEXANONE	5	µg/l	U						
IR26MW41A	0414M013	3/29/04	VOLATILES	4-METHYL-2-PENTANONE	5	µg/l	U						
IR26MW41A	0414M013	3/29/04	VOLATILES	ACETONE	5	µg/l	U	UJ7					
IR26MW41A	0414M013	3/29/04	VOLATILES	BENZENE	0.5	µg/l	U						
IR26MW41A	0414M013	3/29/04	VOLATILES	BROMOCHLOROMETHANE	0.5	µg/l	U						
IR26MW41A	0414M013	3/29/04	VOLATILES	BROMODICHLOROMETHANE	0.5	µg/l	U						
IR26MW41A	0414M013	3/29/04	VOLATILES	BROMOFORM	0.5	µg/l	U						
IR26MW41A	0414M013	3/29/04	VOLATILES	BROMOMETHANE	0.5	µg/l	U						
IR26MW41A	0414M013	3/29/04	VOLATILES	CARBON DISULFIDE	0.5	µg/l	U						
IR26MW41A	0414M013	3/29/04	VOLATILES	CARBON TETRACHLORIDE	0.5	µg/l	U						
IR26MW41A	0414M013	3/29/04	VOLATILES	CHLOROBENZENE	0.5	µg/l	U						
IR26MW41A	0414M013	3/29/04	VOLATILES	CHLOROETHANE	0.5	µg/l	U						
IR26MW41A	0414M013	3/29/04	VOLATILES	CHLOROFORM	0.5	µg/l	U						
IR26MW41A	0414M013	3/29/04	VOLATILES	CHLOROMETHANE	0.5	µg/l	U						
IR26MW41A	0414M013	3/29/04	VOLATILES	cis-1,2-DICHLOROETHENE	0.29	µg/l	J	J	85				
IR26MW41A	0414M013	3/29/04	VOLATILES	cis-1,3-DICHLOROPROPENE	0.5	µg/l	U						
IR26MW41A	0414M013	3/29/04	VOLATILES	CYCLOHEXANE	0.5	µg/l	U						
IR26MW41A	0414M013	3/29/04	VOLATILES	CYCLOHEXANE, METHYL-	0.5	µg/l	U						
IR26MW41A	0414M013	3/29/04	VOLATILES	DIBROMOCHLOROMETHANE	0.5	µg/l	U						
IR26MW41A	0414M013	3/29/04	VOLATILES	DICHLORODIFLUOROMETHANE	0.5	µg/l	U						
IR26MW41A	0414M013	3/29/04	VOLATILES	ETHYL BENZENE	0.5	µg/l	U						
IR26MW41A	0414M013	3/29/04	VOLATILES	ISOPROPYLBENZENE	0.5	µg/l	U						
IR26MW41A	0414M013	3/29/04	VOLATILES	METHYL ACETATE	0.5	µg/l	U						
IR26MW41A	0414M013	3/29/04	VOLATILES	METHYL tert-BUTYL ETHER	0.5	µg/l	U						
IR26MW41A	0414M013	3/29/04	VOLATILES	METHYLENE CHLORIDE	0.5	µg/l	U						
IR26MW41A	0414M013	3/29/04	VOLATILES	STYRENE	0.5	µg/l	U						
IR26MW41A	0414M013	3/29/04	VOLATILES	TETRACHLOROETHENE	0.5	µg/l	U						
IR26MW41A	0414M013	3/29/04	VOLATILES	TOLUENE	0.5	µg/l	U						
IR26MW41A	0414M013	3/29/04	VOLATILES	trans-1,2-DICHLOROETHENE	0.5	µg/l	U		85				
IR26MW41A	0414M013	3/29/04	VOLATILES	trans-1,3-DICHLOROPROPENE	0.5	µg/l	U						
IR26MW41A	0414M013	3/29/04	VOLATILES	TRICHLOROETHENE	0.5	µg/l	U		114				
IR26MW41A	0414M013	3/29/04	VOLATILES	TRICHLOROFLUOROMETHANE	5.0	µg/l							
IR26MW41A	0414M013	3/29/04	VOLATILES	VINYL CHLORIDE	0.5	µg/l	U		55				
IR26MW41A	0414M013	3/29/04	VOLATILES	XYLENES (TOTAL)	0.5	µg/l	U						
IR26MW46A	0414H011	3/29/04	INORGANICS	HEXAVALENT CHROMIUM	20	µg/l	U						50
IR26MW46A	0414H011	3/29/04	INORGANICS	TOTAL SUSPENDED SOLIDS	10.0	mg/l	U						
IR26MW46A	0414H011	3/29/04	METALS	ARSENIC	10	µg/l	U	R2					36
IR26MW46A	0414H011	3/29/04	METALS	CHROMIUM	6.9	µg/l	J	J					1,030
IR26MW46A	0414H011	3/29/04	METALS	COPPER	2.7	µg/l	J	U1J3					28
IR26MW46A	0414H011	3/29/04	METALS	LEAD	10	µg/l	U						14.4
IR26MW46A	0414H011	3/29/04	METALS	MANGANESE	3120	µg/l							8,140
IR26MW46A	0414H011	3/29/04	METALS	MERCURY	0.2	µg/l	U						0.60
IR26MW46A	0414H011	3/29/04	METALS	ZINC	60	µg/l	U	UJ3					
IR26MW46A	0414H011	3/29/04	PESTICIDES	alpha-CHLORDANE	0.01	µg/l	U						
IR26MW46A	0414H011	3/29/04	PESTICIDES	AROCLOR-1260	0.2	µg/l	U						0.2
IR26MW46A	0414H011	3/29/04	PESTICIDES	gamma-CHLORDANE	0.01	µg/l	U						
IR26MW46A	0414H011	3/29/04	SEMI-VOLATILES	BENZ(a)ANTHRACENE	10	µg/l	U						300
IR26MW46A	0414H011	3/29/04	SEMI-VOLATILES	BENZO(a)PYRENE	10	µg/l	U						300
IR26MW46A	0414H011	3/29/04	SEMI-VOLATILES	BENZO(b)FLUORANTHENE	10	µg/l	U						300
IR26MW46A	0414H011	3/29/04	SEMI-VOLATILES	BENZO(k)FLUORANTHENE	10	µg/l	U						300
IR26MW46A	0414H011	3/29/04	SEMI-VOLATILES	CHRYSENE	10	µg/l	U						300
IR26MW46A	0414H011	3/29/04	SEMI-VOLATILES	DIBENZ(a,h)ANTHRACENE	10	µg/l	U						300
IR26MW46A	0414H011	3/29/04	SEMI-VOLATILES	INDENO(1,2,3-cd)PYRENE	10	µg/l	U						300
IR26MW47A	0414T003	3/29/04	INORGANICS	HEXAVALENT CHROMIUM	11	µg/l	J	J					50
IR26MW47A	0414T003	3/29/04	INORGANICS	TOTAL SUSPENDED SOLIDS	10.0	mg/l	U						

SUMMARY OR ANALYTICAL RESULTS
Seventeeth Quarterly Groundwater Sampling Report - Parcel B
Hunters Point Shipyard
San Francisco, California

Well ID	Sample Number	Sample Date	Analytical Method	Analyte	Result	UNITS	Lab Qual	Valid Code	POC Trigger	SentinelTrigger	VOC Trigger	Utility Line Trigger	Other Well Trigger Level
IR26MW47A	0414T003	3/29/04	METALS	ARSENIC	50	µg/l	U	R2					36
IR26MW47A	0414T003	3/29/04	METALS	CHROMIUM	50	µg/l	U						1,030
IR26MW47A	0414T003	3/29/04	METALS	COPPER	130	µg/l	U	UJ3					28
IR26MW47A	0414T003	3/29/04	METALS	LEAD	50	µg/l	U						14.4
IR26MW47A	0414T003	3/29/04	METALS	MANGANESE	75	µg/l	U						8,140
IR26MW47A	0414T003	3/29/04	METALS	MERCURY	1.4	µg/l							0.60
IR26MW47A	0414T003	3/29/04	METALS	ZINC	300	µg/l	U	UJ3					
IR26MW47A	0414T003	3/29/04	PESTICIDES	alpha-CHLORDANE	0.01	µg/l	U						81
IR26MW47A	0414T003	3/29/04	PESTICIDES	AROCLOR-1260	0.2	µg/l	U						0.2
IR26MW47A	0414T003	3/29/04	PESTICIDES	gamma-CHLORDANE	0.01	µg/l	U						
IR26MW47A	0414T003	3/29/04	SEMI-VOLATILES	BENZ(a)ANTHRACENE	10	µg/l	U						300
IR26MW47A	0414T003	3/29/04	SEMI-VOLATILES	BENZO(a)PYRENE	10	µg/l	U						300
IR26MW47A	0414T003	3/29/04	SEMI-VOLATILES	BENZO(b)FLUORANTHENE	10	µg/l	U						300
IR26MW47A	0414T003	3/29/04	SEMI-VOLATILES	BENZO(k)FLUORANTHENE	10	µg/l	U						300
IR26MW47A	0414T003	3/29/04	SEMI-VOLATILES	CHRYSENE	10	µg/l	U						300
IR26MW47A	0414T003	3/29/04	SEMI-VOLATILES	DIBENZ(a,h)ANTHRACENE	10	µg/l	U						300
IR26MW47A	0414T003	3/29/04	SEMI-VOLATILES	INDENO(1,2,3-cd)PYRENE	10	µg/l	U						300
IR26MW48A	0414H013	3/29/04	INORGANICS	HEXAVALENT CHROMIUM	8	µg/l	J	J5					50
IR26MW48A	0414H013	3/29/04	INORGANICS	TOTAL SUSPENDED SOLIDS	10	mg/l	U						
IR26MW48A	0414H013	3/29/04	INORGANICS	TOTAL SUSPENDED SOLIDS	12	mg/l							
IR26MW48A	0414H013	3/29/04	METALS	ARSENIC	50	µg/l	U	R2					36
IR26MW48A	0414H013	3/29/04	METALS	CHROMIUM	60.8	µg/l							1,030
IR26MW48A	0414H013	3/29/04	METALS	COPPER	130	µg/l	U	UJ3					28
IR26MW48A	0414H013	3/29/04	METALS	LEAD	50	µg/l	U						14.4
IR26MW48A	0414H013	3/29/04	METALS	MANGANESE	150	µg/l							8,140
IR26MW48A	0414H013	3/29/04	METALS	MERCURY	0.2	µg/l	U						0.60
IR26MW48A	0414H013	3/29/04	METALS	ZINC	300	µg/l	U	UJ3					81
IR26MW48A	0414H013	3/29/04	PESTICIDES	alpha-CHLORDANE	0.01	µg/l	U	UJ3					81
IR26MW48A	0414H013	3/29/04	PESTICIDES	AROCLOR-1260	0.2	µg/l	U	UJ3					0.2
IR26MW48A	0414H013	3/29/04	PESTICIDES	gamma-CHLORDANE	0.01	µg/l	U	UJ3					
IR26MW48A	0414H013	3/29/04	SEMI-VOLATILES	BENZ(a)ANTHRACENE	10	µg/l	U						300
IR26MW48A	0414H013	3/29/04	SEMI-VOLATILES	BENZO(a)PYRENE	10	µg/l	U						300
IR26MW48A	0414H013	3/29/04	SEMI-VOLATILES	BENZO(b)FLUORANTHENE	10	µg/l	U						300
IR26MW48A	0414H013	3/29/04	SEMI-VOLATILES	BENZO(k)FLUORANTHENE	10	µg/l	U						300
IR26MW48A	0414H013	3/29/04	SEMI-VOLATILES	CHRYSENE	10	µg/l	U						300
IR26MW48A	0414H013	3/29/04	SEMI-VOLATILES	DIBENZ(a,h)ANTHRACENE	10	µg/l	U						300
IR26MW48A	0414H013	3/29/04	SEMI-VOLATILES	INDENO(1,2,3-cd)PYRENE	10	µg/l	U						300
IR46MW37A	0414T005	3/29/04	FUELS	DIESEL	50	µg/l	U						
IR46MW37A	0414T005	3/29/04	FUELS	GASOLINE	20	µg/l	U						
IR46MW37A	0414T005	3/29/04	FUELS	MOTOR OIL	500	µg/l	U						
IR46MW37A	0414T005	3/29/04	INORGANICS	HEXAVALENT CHROMIUM	20	µg/l	U						
IR46MW37A	0414T005	3/29/04	INORGANICS	TOTAL SUSPENDED SOLIDS	10.0	mg/l	U						
IR46MW37A	0414T005	3/29/04	METALS	ALUMINUM	40.5	µg/l	J	U1					
IR46MW37A	0414T005	3/29/04	METALS	ANTIMONY	60	µg/l	U		500				
IR46MW37A	0414T005	3/29/04	METALS	ARSENIC	10	µg/l	U	R2	36				
IR46MW37A	0414T005	3/29/04	METALS	BARIUM	54.9	µg/l	J	J	504				
IR46MW37A	0414T005	3/29/04	METALS	BERYLLIUM	5	µg/l	U	UJ9	1.4				
IR46MW37A	0414T005	3/29/04	METALS	CADMIUM	5	µg/l	U		9.3				
IR46MW37A	0414T005	3/29/04	METALS	CALCIUM	17000	µg/l		J3					
IR46MW37A	0414T005	3/29/04	METALS	CHROMIUM	10	µg/l	U		15.7				
IR46MW37A	0414T005	3/29/04	METALS	COBALT	50	µg/l	U		20.8				
IR46MW37A	0414T005	3/29/04	METALS	COPPER	5.4	µg/l	J	U1J3	28				
IR46MW37A	0414T005	3/29/04	METALS	IRON	66.8	µg/l	J	U2					
IR46MW37A	0414T005	3/29/04	METALS	LEAD	10	µg/l	U	UJ9	14.4				
IR46MW37A	0414T005	3/29/04	METALS	MAGNESIUM	146000	µg/l	E	CJ83					
IR46MW37A	0414T005	3/29/04	METALS	MAGNESIUM	147000	µg/l	D	J3					
IR46MW37A	0414T005	3/29/04	METALS	MANGANESE	22.4	µg/l			8,140				
IR46MW37A	0414T005	3/29/04	METALS	MERCURY	0.2	µg/l	U		0.60				

SUMMARY OR AN[illegible]ICAL RESULTS
Seventeeth Quarterly Groundwater Sampling Report - Parcel B
Hunters Point Shipyard
San Francisco, California

Well ID	Sample Number	Sample Date	Analytical Method	Analyte	Result	UNITS	Lab Qual	Valid Code	POC Trigger	SentinelTrigger	VOC Trigger	Utility Line Trigger	Other Well Trigger Level
IR46MW37A	0414T005	3/29/04	METALS	NICKEL	40	µg/l	U	UJ9	96.5				
IR46MW37A	0414T005	3/29/04	METALS	POTASSIUM	3340	µg/l	J	J3					
IR46MW37A	0414T005	3/29/04	METALS	SELENIUM	35	µg/l	U	UJ9					
IR46MW37A	0414T005	3/29/04	METALS	SILVER	10	µg/l	U		7.43				
IR46MW37A	0414T005	3/29/04	METALS	SODIUM	147000	µg/l	E	CJ83					
IR46MW37A	0414T005	3/29/04	METALS	SODIUM	156000	µg/l	D	J3					
IR46MW37A	0414T005	3/29/04	METALS	THALLIUM	25	µg/l	U		13				
IR46MW37A	0414T005	3/29/04	METALS	VANADIUM	50	µg/l	U	UJ9					
IR46MW37A	0414T005	3/29/04	METALS	ZINC	60	µg/l	U	UJ3	81				
IR46MW37A	0414T005	3/29/04	VOLATILES	1,1,1-TRICHLOROETHANE	0.5	µg/l	U						
IR46MW37A	0414T005	3/29/04	VOLATILES	1,1,2,2-TETRACHLOROETHANE	0.5	µg/l	U						
IR46MW37A	0414T005	3/29/04	VOLATILES	1,1,2-TRICHLORO-1,2,2-TRIFLUOROETHANE	0.5	µg/l	U						
IR46MW37A	0414T005	3/29/04	VOLATILES	1,1,2-TRICHLOROETHANE	0.5	µg/l	U						
IR46MW37A	0414T005	3/29/04	VOLATILES	1,1-DICHLOROETHANE	0.5	µg/l	U						
IR46MW37A	0414T005	3/29/04	VOLATILES	1,1-DICHLOROETHENE	0.5	µg/l	U						
IR46MW37A	0414T005	3/29/04	VOLATILES	1,2,3-TRICHLOROBENZENE	0.5	µg/l	U						
IR46MW37A	0414T005	3/29/04	VOLATILES	1,2,4-TRICHLOROBENZENE	0.5	µg/l	U						
IR46MW37A	0414T005	3/29/04	VOLATILES	1,2-DIBROMO-3-CHLOROPROPANE	1	µg/l	U						
IR46MW37A	0414T005	3/29/04	VOLATILES	1,2-DIBROMOETHANE	0.5	µg/l	U						
IR46MW37A	0414T005	3/29/04	VOLATILES	1,2-DICHLOROBENZENE	0.5	µg/l	U						
IR46MW37A	0414T005	3/29/04	VOLATILES	1,2-DICHLOROETHANE	0.5	µg/l	U						
IR46MW37A	0414T005	3/29/04	VOLATILES	1,2-DICHLOROPROPANE	0.5	µg/l	U						
IR46MW37A	0414T005	3/29/04	VOLATILES	1,3-DICHLOROBENZENE	0.5	µg/l	U						
IR46MW37A	0414T005	3/29/04	VOLATILES	1,4-DICHLOROBENZENE	0.5	µg/l	U						
IR46MW37A	0414T005	3/29/04	VOLATILES	2-BUTANONE	5	µg/l	U						
IR46MW37A	0414T005	3/29/04	VOLATILES	2-HEXANONE	5	µg/l	U						
IR46MW37A	0414T005	3/29/04	VOLATILES	4-METHYL-2-PENTANONE	5	µg/l	U						
IR46MW37A	0414T005	3/29/04	VOLATILES	ACETONE	5	µg/l	U	UJ7					
IR46MW37A	0414T005	3/29/04	VOLATILES	BENZENE	0.5	µg/l	U						
IR46MW37A	0414T005	3/29/04	VOLATILES	BROMOCHLOROMETHANE	0.5	µg/l	U						
IR46MW37A	0414T005	3/29/04	VOLATILES	BROMODICHLOROMETHANE	0.5	µg/l	U						
IR46MW37A	0414T005	3/29/04	VOLATILES	BROMOFORM	0.5	µg/l	U						
IR46MW37A	0414T005	3/29/04	VOLATILES	BROMOMETHANE	0.5	µg/l	U						
IR46MW37A	0414T005	3/29/04	VOLATILES	CARBON DISULFIDE	0.5	µg/l	U						
IR46MW37A	0414T005	3/29/04	VOLATILES	CARBON TETRACHLORIDE	0.5	µg/l	U						
IR46MW37A	0414T005	3/29/04	VOLATILES	CHLOROBENZENE	0.5	µg/l	U						
IR46MW37A	0414T005	3/29/04	VOLATILES	CHLOROETHANE	0.5	µg/l	U						
IR46MW37A	0414T005	3/29/04	VOLATILES	CHLOROFORM	0.5	µg/l	U						
IR46MW37A	0414T005	3/29/04	VOLATILES	CHLOROMETHANE	0.5	µg/l	U						
IR46MW37A	0414T005	3/29/04	VOLATILES	cis-1,2-DICHLOROETHENE	0.5	µg/l	U		85				
IR46MW37A	0414T005	3/29/04	VOLATILES	cis-1,3-DICHLOROPROPENE	0.5	µg/l	U						
IR46MW37A	0414T005	3/29/04	VOLATILES	CYCLOHEXANE	0.5	µg/l	U						
IR46MW37A	0414T005	3/29/04	VOLATILES	CYCLOHEXANE, METHYL-	0.5	µg/l	U						
IR46MW37A	0414T005	3/29/04	VOLATILES	DIBROMOCHLOROMETHANE	0.5	µg/l	U						
IR46MW37A	0414T005	3/29/04	VOLATILES	DICHLORODIFLUOROMETHANE	0.5	µg/l	U						
IR46MW37A	0414T005	3/29/04	VOLATILES	ETHYL BENZENE	0.5	µg/l	U						
IR46MW37A	0414T005	3/29/04	VOLATILES	ISOPROPYLBENZENE	0.5	µg/l	U						
IR46MW37A	0414T005	3/29/04	VOLATILES	METHYL ACETATE	0.5	µg/l	U						
IR46MW37A	0414T005	3/29/04	VOLATILES	METHYL tert-BUTYL ETHER	0.5	µg/l	U						
IR46MW37A	0414T005	3/29/04	VOLATILES	METHYLENE CHLORIDE	0.5	µg/l	U						
IR46MW37A	0414T005	3/29/04	VOLATILES	STYRENE	0.5	µg/l	U						
IR46MW37A	0414T005	3/29/04	VOLATILES	TETRACHLOROETHENE	0.5	µg/l	U						
IR46MW37A	0414T005	3/29/04	VOLATILES	TOLUENE	0.5	µg/l	U						
IR46MW37A	0414T005	3/29/04	VOLATILES	trans-1,2-DICHLOROETHENE	0.5	µg/l	U		85				
IR46MW37A	0414T005	3/29/04	VOLATILES	trans-1,3-DICHLOROPROPENE	0.5	µg/l	U						
IR46MW37A	0414T005	3/29/04	VOLATILES	TRICHLOROETHENE	0.5	µg/l	U		114				
IR46MW37A	0414T005	3/29/04	VOLATILES	TRICHLOROFLUOROMETHANE	0.5	µg/l	U						
IR46MW37A	0414T005	3/29/04	VOLATILES	VINYL CHLORIDE	0.5	µg/l	U		55				

SUMMARY OR ANALYTICAL RESULTS
Seventeeth Quarterly Groundwater Sampling Report - Parcel B
Hunters Point Shipyard
San Francisco, California

Well ID	Sample Number	Sample Date	Analytical Method	Analyte	Result	UNITS	Lab Qual	Valid Code	POC Trigger	SentinelTrigger	VOC Trigger	Utility Line Trigger	Other Well Trigger Level
IR46MW37A	0414T005	3/29/04	VOLATILES	XYLENES (TOTAL)	0.5	µg/l	U						
IR61MW05A	0414M015	3/29/04	FUELS	DIESEL	50	µg/l	U						
IR61MW05A	0414M015	3/29/04	FUELS	GASOLINE	20	µg/l	U						
IR61MW05A	0414M015	3/29/04	FUELS	MOTOR OIL	500	µg/l	U						
IR61MW05A	0414M015	3/29/04	INORGANICS	HEXAVALENT CHROMIUM	19	µg/l	J	J					
IR61MW05A	0414M015	3/29/04	INORGANICS	TOTAL SUSPENDED SOLIDS	10.0	mg/l	U						
IR61MW05A	0414M015	3/29/04	METALS	ALUMINUM	67.5	µg/l	J	U1					
IR61MW05A	0414M015	3/29/04	METALS	ANTIMONY	2.4	µg/l	J	U1J9		5,000			
IR61MW05A	0414M015	3/29/04	METALS	ARSENIC	10	µg/l	U	R2		360			
IR61MW05A	0414M015	3/29/04	METALS	BARIUM	172	µg/l	J	J		5,040			
IR61MW05A	0414M015	3/29/04	METALS	BERYLLIUM	5	µg/l	U	UJ9		14			
IR61MW05A	0414M015	3/29/04	METALS	CADMIUM	5	µg/l	U			93			
IR61MW05A	0414M015	3/29/04	METALS	CALCIUM	41700	µg/l		J3					
IR61MW05A	0414M015	3/29/04	METALS	CHROMIUM	24.1	µg/l				157			
IR61MW05A	0414M015	3/29/04	METALS	COBALT	50	µg/l	U			208			
IR61MW05A	0414M015	3/29/04	METALS	COPPER	5.0	µg/l	J	J3		280			
IR61MW05A	0414M015	3/29/04	METALS	IRON	35.7	µg/l	J	U2					
IR61MW05A	0414M015	3/29/04	METALS	LEAD	10	µg/l	U	UJ9		144			
IR61MW05A	0414M015	3/29/04	METALS	MAGNESIUM	242000	µg/l	E	CJ83					
IR61MW05A	0414M015	3/29/04	METALS	MAGNESIUM	218000	µg/l	D	J3					
IR61MW05A	0414M015	3/29/04	METALS	MANGANESE	5.0	µg/l	J	U2		81,400			
IR61MW05A	0414M015	3/29/04	METALS	MERCURY	0.2	µg/l	U			6			
IR61MW05A	0414M015	3/29/04	METALS	NICKEL	40	µg/l	U	UJ9		965			
IR61MW05A	0414M015	3/29/04	METALS	POTASSIUM	1740	µg/l	J	J3					
IR61MW05A	0414M015	3/29/04	METALS	SELENIUM	5.1	µg/l	J	J					
IR61MW05A	0414M015	3/29/04	METALS	SILVER	10	µg/l	U			74.3			
IR61MW05A	0414M015	3/29/04	METALS	SODIUM	253000	µg/l	E	CJ83					
IR61MW05A	0414M015	3/29/04	METALS	SODIUM	244000	µg/l	D	J3					
IR61MW05A	0414M015	3/29/04	METALS	THALLIUM	25	µg/l	U			130			
IR61MW05A	0414M015	3/29/04	METALS	VANADIUM	3.2	µg/l	J	J					
IR61MW05A	0414M015	3/29/04	METALS	ZINC	60	µg/l	U	UJ3		810			
IR61MW05A	0414M015	3/29/04	VOLATILES	1,1,1-TRICHLOROETHANE	0.5	µg/l	U						
IR61MW05A	0414M015	3/29/04	VOLATILES	1,1,2,2-TETRACHLOROETHANE	0.5	µg/l	U						
IR61MW05A	0414M015	3/29/04	VOLATILES	1,1,2-TRICHLORO-1,2,2-TRIFLUOROETHANE	0.5	µg/l	U						
IR61MW05A	0414M015	3/29/04	VOLATILES	1,1,2-TRICHLOROETHANE	0.5	µg/l	U						
IR61MW05A	0414M015	3/29/04	VOLATILES	1,1-DICHLOROETHANE	0.5	µg/l	U						
IR61MW05A	0414M015	3/29/04	VOLATILES	1,1-DICHLOROETHENE	0.5	µg/l	U						
IR61MW05A	0414M015	3/29/04	VOLATILES	1,2,3-TRICHLOROBENZENE	0.5	µg/l	U						
IR61MW05A	0414M015	3/29/04	VOLATILES	1,2,4-TRICHLOROBENZENE	0.5	µg/l	U						
IR61MW05A	0414M015	3/29/04	VOLATILES	1,2-DIBROMO-3-CHLOROPROPANE	1	µg/l	U						
IR61MW05A	0414M015	3/29/04	VOLATILES	1,2-DIBROMOETHANE	0.5	µg/l	U						
IR61MW05A	0414M015	3/29/04	VOLATILES	1,2-DICHLOROBENZENE	0.5	µg/l	U						
IR61MW05A	0414M015	3/29/04	VOLATILES	1,2-DICHLOROETHANE	0.5	µg/l	U						
IR61MW05A	0414M015	3/29/04	VOLATILES	1,2-DICHLOROPROPANE	0.5	µg/l	U						
IR61MW05A	0414M015	3/29/04	VOLATILES	1,3-DICHLOROBENZENE	0.5	µg/l	U						
IR61MW05A	0414M015	3/29/04	VOLATILES	1,4-DICHLOROBENZENE	0.5	µg/l	U						
IR61MW05A	0414M015	3/29/04	VOLATILES	2-BUTANONE	5	µg/l	U						
IR61MW05A	0414M015	3/29/04	VOLATILES	2-HEXANONE	5	µg/l	U						
IR61MW05A	0414M015	3/29/04	VOLATILES	4-METHYL-2-PENTANONE	5	µg/l	U						
IR61MW05A	0414M015	3/29/04	VOLATILES	ACETONE	5	µg/l		UJ7					
IR61MW05A	0414M015	3/29/04	VOLATILES	BENZENE	0.5	µg/l	U						
IR61MW05A	0414M015	3/29/04	VOLATILES	BROMOCHLOROMETHANE	0.5	µg/l	U						
IR61MW05A	0414M015	3/29/04	VOLATILES	BROMODICHLOROMETHANE	0.5	µg/l	U						
IR61MW05A	0414M015	3/29/04	VOLATILES	BROMOFORM	0.5	µg/l	U						
IR61MW05A	0414M015	3/29/04	VOLATILES	BROMOMETHANE	0.5	µg/l	U						
IR61MW05A	0414M015	3/29/04	VOLATILES	CARBON DISULFIDE	0.5	µg/l	U						
IR61MW05A	0414M015	3/29/04	VOLATILES	CARBON TETRACHLORIDE	0.5	µg/l	U						
IR61MW05A	0414M015	3/29/04	VOLATILES	CHLOROBENZENE	0.5	µg/l	U						

SUMMARY OR AN... ICAL RESULTS
Seventeeth Quarterly Groundwater Sampling Report - Parcel B
Hunters Point Shipyard
San Francisco, California

Well ID	Sample Number	Sample Date	Analytical Method	Analyte	Result	UNITS	Lab Qual	Valid Code	POC Trigger	SentinelTrigger	VOC Trigger	Utility Line Trigger	Other Well Trigger Level
IR61MW05A	0414M015	3/29/04	VOLATILES	CHLOROETHANE	0.5	µg/l	U						
IR61MW05A	0414M015	3/29/04	VOLATILES	CHLOROFORM	0.5	µg/l	U						
IR61MW05A	0414M015	3/29/04	VOLATILES	CHLOROMETHANE	0.5	µg/l	U						
IR61MW05A	0414M015	3/29/04	VOLATILES	cis-1,2-DICHLOROETHENE	0.5	µg/l	U			85			
IR61MW05A	0414M015	3/29/04	VOLATILES	cis-1,3-DICHLOROPROPENE	0.5	µg/l	U						
IR61MW05A	0414M015	3/29/04	VOLATILES	CYCLOHEXANE	0.5	µg/l	U						
IR61MW05A	0414M015	3/29/04	VOLATILES	CYCLOHEXANE, METHYL-	0.5	µg/l	U						
IR61MW05A	0414M015	3/29/04	VOLATILES	DIBROMOCHLOROMETHANE	0.5	µg/l	U						
IR61MW05A	0414M015	3/29/04	VOLATILES	DICHLORODIFLUOROMETHANE	0.5	µg/l	U						
IR61MW05A	0414M015	3/29/04	VOLATILES	ETHYL BENZENE	0.5	µg/l	U						
IR61MW05A	0414M015	3/29/04	VOLATILES	ISOPROPYLBENZENE	0.5	µg/l	U						
IR61MW05A	0414M015	3/29/04	VOLATILES	METHYL ACETATE	0.5	µg/l	U						
IR61MW05A	0414M015	3/29/04	VOLATILES	METHYL tert-BUTYL ETHER	0.5	µg/l	U						
IR61MW05A	0414M015	3/29/04	VOLATILES	METHYLENE CHLORIDE	0.5	µg/l	U						
IR61MW05A	0414M015	3/29/04	VOLATILES	STYRENE	0.5	µg/l	U						
IR61MW05A	0414M015	3/29/04	VOLATILES	TETRACHLOROETHENE	0.5	µg/l	U						
IR61MW05A	0414M015	3/29/04	VOLATILES	TOLUENE	0.5	µg/l	U						
IR61MW05A	0414M015	3/29/04	VOLATILES	trans-1,2-DICHLOROETHENE	0.5	µg/l	U			85			
IR61MW05A	0414M015	3/29/04	VOLATILES	trans-1,3-DICHLOROPROPENE	0.5	µg/l	U						
IR61MW05A	0414M015	3/29/04	VOLATILES	TRICHLOROETHENE	0.5	µg/l	U			114			
IR61MW05A	0414M015	3/29/04	VOLATILES	TRICHLOROFLUOROMETHANE	0.5	µg/l	U						
IR61MW05A	0414M015	3/29/04	VOLATILES	VINYL CHLORIDE	0.5	µg/l	U			55			
IR61MW05A	0414M015	3/29/04	VOLATILES	XYLENES (TOTAL)	0.5	µg/l	U						
PA50MW01A	0414H014	3/29/04	FUELS	DIESEL	50	µg/l	U						
PA50MW01A	0414H014	3/29/04	FUELS	GASOLINE	20	µg/l	U						
PA50MW01A	0414H014	3/29/04	FUELS	MOTOR OIL	500	µg/l	U						
PA50MW01A	0414H014	3/29/04	INORGANICS	HEXAVALENT CHROMIUM	20	µg/l	U						
PA50MW01A	0414H014	3/29/04	INORGANICS	TOTAL SUSPENDED SOLIDS	10.0	mg/l	U						
PA50MW01A	0414H014	3/29/04	METALS	ALUMINUM	68.6	µg/l	J	U1					
PA50MW01A	0414H014	3/29/04	METALS	ANTIMONY	3.5	µg/l	J	U1	500				
PA50MW01A	0414H014	3/29/04	METALS	ARSENIC	10	µg/l	U	R2	36				
PA50MW01A	0414H014	3/29/04	METALS	BARIUM	163	µg/l	J	J	504				
PA50MW01A	0414H014	3/29/04	METALS	BERYLLIUM	5	µg/l	U		1.4				
PA50MW01A	0414H014	3/29/04	METALS	CADMIUM	5	µg/l	U		9.3				
PA50MW01A	0414H014	3/29/04	METALS	CALCIUM	41500	µg/l		J3					
PA50MW01A	0414H014	3/29/04	METALS	CHROMIUM	10	µg/l	U		15.7				
PA50MW01A	0414H014	3/29/04	METALS	COBALT	50	µg/l	U		20.8				
PA50MW01A	0414H014	3/29/04	METALS	COPPER	3.5	µg/l	J	U1J3	28				
PA50MW01A	0414H014	3/29/04	METALS	IRON	40.5	µg/l	J	U2					
PA50MW01A	0414H014	3/29/04	METALS	LEAD	10	µg/l	U		14.4				
PA50MW01A	0414H014	3/29/04	METALS	MAGNESIUM	102000	µg/l	E	CJ83					
PA50MW01A	0414H014	3/29/04	METALS	MAGNESIUM	107000	µg/l	D	J3					
PA50MW01A	0414H014	3/29/04	METALS	MANGANESE	139	µg/l			8,140				
PA50MW01A	0414H014	3/29/04	METALS	MERCURY	0.2	µg/l	U		0.60				
PA50MW01A	0414H014	3/29/04	METALS	NICKEL	40	µg/l	U		96.5				
PA50MW01A	0414H014	3/29/04	METALS	POTASSIUM	5520	µg/l		J3					
PA50MW01A	0414H014	3/29/04	METALS	SELENIUM	35	µg/l	U						
PA50MW01A	0414H014	3/29/04	METALS	SILVER	10	µg/l	U		7.43				
PA50MW01A	0414H014	3/29/04	METALS	SODIUM	319000	µg/l	E	CJ83					
PA50MW01A	0414H014	3/29/04	METALS	SODIUM	330000	µg/l	D	J3					
PA50MW01A	0414H014	3/29/04	METALS	THALLIUM	2.7	µg/l	J	U1	13				
PA50MW01A	0414H014	3/29/04	METALS	VANADIUM	3.5	µg/l	J	J					
PA50MW01A	0414H014	3/29/04	METALS	ZINC	60	µg/l	U	UJ3	81				
PA50MW01A	0414H014	3/29/04	VOLATILES	1,1,1-TRICHLOROETHANE	0.5	µg/l	U						
PA50MW01A	0414H014	3/29/04	VOLATILES	1,1,2,2-TETRACHLOROETHANE	0.5	µg/l	U						
PA50MW01A	0414H014	3/29/04	VOLATILES	1,1,2-TRICHLORO-1,2,2-TRIFLUOROETHANE	0.5	µg/l	U						
PA50MW01A	0414H014	3/29/04	VOLATILES	1,1,2-TRICHLOROETHANE	0.5	µg/l	U						
PA50MW01A	0414H014	3/29/04	VOLATILES	1,1-DICHLOROETHANE	0.5	µg/l	U						

SUMMARY OR ANALYTICAL RESULTS
Seventeeth Quarterly Groundwater Sampling Report - Parcel B
Hunters Point Shipyard
San Francisco, California

Well ID	Sample Number	Sample Date	Analytical Method	Analyte	Result	UNITS	Lab Qual	Valid Code	POC Trigger	SentinelTrigger	VOC Trigger	Utility Line Trigger	Other Well Trigger Level
PA50MW01A	0414H014	3/29/04	VOLATILES	1,1-DICHLOROETHENE	0.5	µg/l	U						
PA50MW01A	0414H014	3/29/04	VOLATILES	1,2,3-TRICHLOROBENZENE	0.5	µg/l	U						
PA50MW01A	0414H014	3/29/04	VOLATILES	1,2,4-TRICHLOROBENZENE	0.5	µg/l	U						
PA50MW01A	0414H014	3/29/04	VOLATILES	1,2-DIBROMO-3-CHLOROPROPANE	1	µg/l	U						
PA50MW01A	0414H014	3/29/04	VOLATILES	1,2-DIBROMOETHANE	0.5	µg/l	U						
PA50MW01A	0414H014	3/29/04	VOLATILES	1,2-DICHLOROBENZENE	0.5	µg/l	U						
PA50MW01A	0414H014	3/29/04	VOLATILES	1,2-DICHLOROETHANE	0.5	µg/l	U						
PA50MW01A	0414H014	3/29/04	VOLATILES	1,2-DICHLOROPROPANE	0.5	µg/l	U						
PA50MW01A	0414H014	3/29/04	VOLATILES	1,3-DICHLOROBENZENE	0.5	µg/l	U						
PA50MW01A	0414H014	3/29/04	VOLATILES	1,4-DICHLOROBENZENE	0.5	µg/l	U						
PA50MW01A	0414H014	3/29/04	VOLATILES	2-BUTANONE	5	µg/l	U						
PA50MW01A	0414H014	3/29/04	VOLATILES	2-HEXANONE	5	µg/l	U						
PA50MW01A	0414H014	3/29/04	VOLATILES	4-METHYL-2-PENTANONE	5	µg/l	U						
PA50MW01A	0414H014	3/29/04	VOLATILES	ACETONE	5	µg/l	U	UJ7					
PA50MW01A	0414H014	3/29/04	VOLATILES	BENZENE	0.5	µg/l	U						
PA50MW01A	0414H014	3/29/04	VOLATILES	BROMOCHLOROMETHANE	0.5	µg/l	U						
PA50MW01A	0414H014	3/29/04	VOLATILES	BROMODICHLOROMETHANE	0.5	µg/l	U						
PA50MW01A	0414H014	3/29/04	VOLATILES	BROMOFORM	0.5	µg/l	U						
PA50MW01A	0414H014	3/29/04	VOLATILES	BROMOMETHANE	0.5	µg/l	U						
PA50MW01A	0414H014	3/29/04	VOLATILES	CARBON DISULFIDE	0.5	µg/l	U						
PA50MW01A	0414H014	3/29/04	VOLATILES	CARBON TETRACHLORIDE	0.5	µg/l	U						
PA50MW01A	0414H014	3/29/04	VOLATILES	CHLOROBENZENE	0.5	µg/l	U						
PA50MW01A	0414H014	3/29/04	VOLATILES	CHLOROETHANE	0.5	µg/l	U						
PA50MW01A	0414H014	3/29/04	VOLATILES	CHLOROFORM	0.5	µg/l	U						
PA50MW01A	0414H014	3/29/04	VOLATILES	CHLOROMETHANE	0.5	µg/l	U						
PA50MW01A	0414H014	3/29/04	VOLATILES	cis-1,2-DICHLOROETHENE	0.20	µg/l	J	J	85				
PA50MW01A	0414H014	3/29/04	VOLATILES	cis-1,3-DICHLOROPROPENE	0.5	µg/l	U						
PA50MW01A	0414H014	3/29/04	VOLATILES	CYCLOHEXANE	0.5	µg/l	U						
PA50MW01A	0414H014	3/29/04	VOLATILES	CYCLOHEXANE, METHYL-	0.5	µg/l	U						
PA50MW01A	0414H014	3/29/04	VOLATILES	DIBROMOCHLOROMETHANE	0.5	µg/l	U						
PA50MW01A	0414H014	3/29/04	VOLATILES	DICHLORODIFLUOROMETHANE	0.5	µg/l	U						
PA50MW01A	0414H014	3/29/04	VOLATILES	ETHYL BENZENE	0.5	µg/l	U						
PA50MW01A	0414H014	3/29/04	VOLATILES	ISOPROPYLBENZENE	0.5	µg/l	U						
PA50MW01A	0414H014	3/29/04	VOLATILES	METHYL ACETATE	0.5	µg/l	U						
PA50MW01A	0414H014	3/29/04	VOLATILES	METHYL tert-BUTYL ETHER	0.5	µg/l	U						
PA50MW01A	0414H014	3/29/04	VOLATILES	METHYLENE CHLORIDE	0.5	µg/l	U						
PA50MW01A	0414H014	3/29/04	VOLATILES	STYRENE	0.5	µg/l	U						
PA50MW01A	0414H014	3/29/04	VOLATILES	TETRACHLOROETHENE	0.5	µg/l	U						
PA50MW01A	0414H014	3/29/04	VOLATILES	TOLUENE	0.5	µg/l	U						
PA50MW01A	0414H014	3/29/04	VOLATILES	trans-1,2-DICHLOROETHENE	0.5	µg/l	U		85				
PA50MW01A	0414H014	3/29/04	VOLATILES	trans-1,3-DICHLOROPROPENE	0.5	µg/l	U						
PA50MW01A	0414H014	3/29/04	VOLATILES	TRICHLOROETHENE	0.5	µg/l	U		114				
PA50MW01A	0414H014	3/29/04	VOLATILES	TRICHLOROFLUOROMETHANE	0.5	µg/l	U						
PA50MW01A	0414H014	3/29/04	VOLATILES	VINYL CHLORIDE	0.5	µg/l	U		55				
PA50MW01A	0414H014	3/29/04	VOLATILES	XYLENES (TOTAL)	0.5	µg/l	U						
UT03MW11A	0414T006	3/30/04	FUELS	DIESEL	50	µg/l	U						
UT03MW11A	0414T006	3/30/04	FUELS	GASOLINE	20	µg/l	U						
UT03MW11A	0414T006	3/30/04	FUELS	MOTOR OIL	500	µg/l	U						
UT03MW11A	0414T006	3/30/04	INORGANICS	HEXAVALENT CHROMIUM	20	µg/l	U						
UT03MW11A	0414T006	3/30/04	INORGANICS	TOTAL SUSPENDED SOLIDS	10.0	mg/l	U						
UT03MW11A	0414T006	3/30/04	METALS	ALUMINUM	200	µg/l	U						
UT03MW11A	0414T006	3/30/04	METALS	ANTIMONY	60	µg/l	U			5,000			
UT03MW11A	0414T006	3/30/04	METALS	ARSENIC	10	µg/l	U	R2		360			
UT03MW11A	0414T006	3/30/04	METALS	BARIUM	200	µg/l	U			5,040			
UT03MW11A	0414T006	3/30/04	METALS	BERYLLIUM	5	µg/l	U			14			
UT03MW11A	0414T006	3/30/04	METALS	CADMIUM	5	µg/l	U			93			
UT03MW11A	0414T006	3/30/04	METALS	CALCIUM	289	µg/l	J	U2J3					
UT03MW11A	0414T006	3/30/04	METALS	CHROMIUM	10	µg/l	U			157			

SUMMARY OR AN[illegible]ICAL RESULTS
Seventeeth Quarterly Groundwater Sampling Report - Parcel B
Hunters Point Shipyard
San Francisco, California

Well ID	Sample Number	Sample Date	Analytical Method	Analyte	Result	UNITS	Lab Qual	Valid Code	POC Trigger	SentinelTrigger	VOC Trigger	Utility Line Trigger	Other Well Trigger Level
UT03MW11A	0414T006	3/30/04	METALS	COBALT	1.0	µg/l	J	U2		208			
UT03MW11A	0414T006	3/30/04	METALS	COPPER	1.0	µg/l	J	U1		280			
UT03MW11A	0414T006	3/30/04	METALS	IRON	100	µg/l	U						
UT03MW11A	0414T006	3/30/04	METALS	LEAD	10	µg/l	U			144			
UT03MW11A	0414T006	3/30/04	METALS	MAGNESIUM	77.8	µg/l	J	UJ31					
UT03MW11A	0414T006	3/30/04	METALS	MANGANESE	15	µg/l	U			81,400			
UT03MW11A	0414T006	3/30/04	METALS	MERCURY	0.2	µg/l	U			6			
UT03MW11A	0414T006	3/30/04	METALS	NICKEL	40	µg/l	U			965			
UT03MW11A	0414T006	3/30/04	METALS	POTASSIUM	113	µg/l	J	UJ32					
UT03MW11A	0414T006	3/30/04	METALS	SELENIUM	35	µg/l	U	R2					
UT03MW11A	0414T006	3/30/04	METALS	SILVER	10	µg/l	U			74.3			
UT03MW11A	0414T006	3/30/04	METALS	SODIUM	435	µg/l	J	UJ32					
UT03MW11A	0414T006	3/30/04	METALS	THALLIUM	25	µg/l	U			130			
UT03MW11A	0414T006	3/30/04	METALS	VANADIUM	50	µg/l	U						
UT03MW11A	0414T006	3/30/04	METALS	ZINC	79.7	µg/l		U2		810			
UT03MW11A	0414T006	3/30/04	VOLATILES	1,1,1-TRICHLOROETHANE	0.5	µg/l	U						
UT03MW11A	0414T006	3/30/04	VOLATILES	1,1,2,2-TETRACHLOROETHANE	0.5	µg/l	U						
UT03MW11A	0414T006	3/30/04	VOLATILES	1,1,2-TRICHLORO-1,2,2-TRIFLUOROETHANE	0.5	µg/l	U						
UT03MW11A	0414T006	3/30/04	VOLATILES	1,1,2-TRICHLOROETHANE	0.5	µg/l	U						
UT03MW11A	0414T006	3/30/04	VOLATILES	1,1-DICHLOROETHANE	0.5	µg/l	U						
UT03MW11A	0414T006	3/30/04	VOLATILES	1,1-DICHLOROETHENE	0.5	µg/l	U						
UT03MW11A	0414T006	3/30/04	VOLATILES	1,2,3-TRICHLOROBENZENE	0.5	µg/l	U						
UT03MW11A	0414T006	3/30/04	VOLATILES	1,2,4-TRICHLOROBENZENE	0.5	µg/l	U						
UT03MW11A	0414T006	3/30/04	VOLATILES	1,2-DIBROMO-3-CHLOROPROPANE	1	µg/l	U	UJ7					
UT03MW11A	0414T006	3/30/04	VOLATILES	1,2-DIBROMOETHANE	0.5	µg/l	U						
UT03MW11A	0414T006	3/30/04	VOLATILES	1,2-DICHLOROBENZENE	0.5	µg/l	U						
UT03MW11A	0414T006	3/30/04	VOLATILES	1,2-DICHLOROETHANE	0.5	µg/l	U						
UT03MW11A	0414T006	3/30/04	VOLATILES	1,2-DICHLOROPROPANE	0.5	µg/l	U						
UT03MW11A	0414T006	3/30/04	VOLATILES	1,3-DICHLOROBENZENE	0.5	µg/l	U						
UT03MW11A	0414T006	3/30/04	VOLATILES	1,4-DICHLOROBENZENE	0.5	µg/l	U						
UT03MW11A	0414T006	3/30/04	VOLATILES	2-BUTANONE	5	µg/l	U						
UT03MW11A	0414T006	3/30/04	VOLATILES	2-HEXANONE	5	µg/l	U						
UT03MW11A	0414T006	3/30/04	VOLATILES	4-METHYL-2-PENTANONE	5	µg/l	U						
UT03MW11A	0414T006	3/30/04	VOLATILES	ACETONE	5	µg/l	U	UJ7					
UT03MW11A	0414T006	3/30/04	VOLATILES	BENZENE	0.5	µg/l	U						
UT03MW11A	0414T006	3/30/04	VOLATILES	BROMOCHLOROMETHANE	0.5	µg/l	U						
UT03MW11A	0414T006	3/30/04	VOLATILES	BROMODICHLOROMETHANE	0.5	µg/l	U						
UT03MW11A	0414T006	3/30/04	VOLATILES	BROMOFORM	0.5	µg/l	U						
UT03MW11A	0414T006	3/30/04	VOLATILES	BROMOMETHANE	0.5	µg/l	U						
UT03MW11A	0414T006	3/30/04	VOLATILES	CARBON DISULFIDE	0.5	µg/l	U						
UT03MW11A	0414T006	3/30/04	VOLATILES	CARBON TETRACHLORIDE	0.5	µg/l	U						
UT03MW11A	0414T006	3/30/04	VOLATILES	CHLOROBENZENE	0.5	µg/l	U						
UT03MW11A	0414T006	3/30/04	VOLATILES	CHLOROETHANE	0.5	µg/l	U						
UT03MW11A	0414T006	3/30/04	VOLATILES	CHLOROFORM	0.5	µg/l	U						
UT03MW11A	0414T006	3/30/04	VOLATILES	CHLOROMETHANE	0.5	µg/l	U						
UT03MW11A	0414T006	3/30/04	VOLATILES	cis-1,2-DICHLOROETHENE	0.5	µg/l	U			85			
UT03MW11A	0414T006	3/30/04	VOLATILES	cis-1,3-DICHLOROPROPENE	0.5	µg/l	U						
UT03MW11A	0414T006	3/30/04	VOLATILES	CYCLOHEXANE	0.5	µg/l	U						
UT03MW11A	0414T006	3/30/04	VOLATILES	CYCLOHEXANE, METHYL-	0.5	µg/l	U						
UT03MW11A	0414T006	3/30/04	VOLATILES	DIBROMOCHLOROMETHANE	0.5	µg/l	U						
UT03MW11A	0414T006	3/30/04	VOLATILES	DICHLORODIFLUOROMETHANE	0.5	µg/l	U						
UT03MW11A	0414T006	3/30/04	VOLATILES	ETHYL BENZENE	0.5	µg/l	U						
UT03MW11A	0414T006	3/30/04	VOLATILES	ISOPROPYLBENZENE	0.5	µg/l	U						
UT03MW11A	0414T006	3/30/04	VOLATILES	METHYL ACETATE	0.5	µg/l	U	UJ7					
UT03MW11A	0414T006	3/30/04	VOLATILES	METHYL tert-BUTYL ETHER	0.5	µg/l	U						
UT03MW11A	0414T006	3/30/04	VOLATILES	METHYLENE CHLORIDE	0.5	µg/l	U						
UT03MW11A	0414T006	3/30/04	VOLATILES	STYRENE	0.5	µg/l	U						
UT03MW11A	0414T006	3/30/04	VOLATILES	TETRACHLOROETHENE	0.5	µg/l	U						

SUMMARY OR ANALYTICAL RESULTS
Seventeeth Quarterly Groundwater Sampling Report - Parcel B
Hunters Point Shipyard
San Francisco, California

Well ID	Sample Number	Sample Date	Analytical Method	Analyte	Result	UNITS	Lab Qual	Valid Code	POC Trigger	SentinelTrigger	VOC Trigger	Utility Line Trigger	Other Well Trigger Level
UT03MW11A	0414T006	3/30/04	VOLATILES	TOLUENE	0.5	µg/l	U						
UT03MW11A	0414T006	3/30/04	VOLATILES	trans-1,2-DICHLOROETHENE	0.5	µg/l	U			85			
UT03MW11A	0414T006	3/30/04	VOLATILES	trans-1,3-DICHLOROPROPENE	0.5	µg/l	U						
UT03MW11A	0414T006	3/30/04	VOLATILES	TRICHLOROETHENE	0.5	µg/l	U			114			
UT03MW11A	0414T006	3/30/04	VOLATILES	TRICHLOROFLUOROMETHANE	0.5	µg/l	U						
UT03MW11A	0414T006	3/30/04	VOLATILES	VINYL CHLORIDE	0.5	µg/l	U			55			
UT03MW11A	0414T006	3/30/04	VOLATILES	XYLENES (TOTAL)	0.5	µg/l	U						

APPENDIX B

Monitoring Well Sampling Sheets, January to March 2004 Sampling Event

KLEINFELDER

MONITORING WELL SAMPLING SHEET

Well No.: IR06MW42A

Sheet 1 of 1

Personnel: Pete Latanya

Day: Tuesday

Date: 3/23/04

Casing Volume = Gallons

Initial depth to water: 10.18 ft. below top of casing

[casing volume = water column height (ft) x 0.03 gal/ft (0.75-inch well) or 0.163 gal/ft (2-inch well) or 0.652 gal/ft (4-inch well)]

Organic Vapor Concentrations

Top of Casing: 0 ppm Background: 0 ppm

Groundwater Parameters

Time	Approx Cumulative Volume Purged (L)	Approx Discharge Rate (mL/min)	Depth to water (ft. below TOC)	Temperature (°C)	Specific Conductivity (mS/cm)	Dissolved Oxygen (mg/L)	pH	ORP (mv)	Turbidity (NTU)	Sat ~~PID/OVM~~ (ppm)
1135	5	~100	10.45	20	1.2	0.1	7.1	-58	27	0.1
1150	10	≈50	12.2	21	1.3	2.0	7.1	-47	1	0.1
1155	20	~1000	12.8	21	1.2	1.6	7.2	-74	1	0.1
1200	21	≈50	12.7	21	1.2	1.7	7.2	-72	0	0.1
1205	25	~200	12.8	22	1.2	1.3	7.2	-76	1	0.1

After sampling and, if accessible, depth to bottom: N/A ft. below TOC Purged Dry? No

Field Measurement Equipment Used

Equipment	Model	Serial Number	Equipment	Model	Serial Number
Water Quality Meter	Horiba	305005	PID	Mini Rae	104517
Turbidimeter			Filter Apparatus		
Water Level Meter	Solinst 101	23571	Other		
Pump			Other		

Groundwater Samples Collected (check all that apply)

Analytes of Concern (Off-Site Lab)				Fate and Transport Data (Off-Site Lab)	
Metals	X			Chloride	
PCBs	X			Alkalinity	
Pesticides	X			Ethane	
SVOCs	X			Ethene	
TPH-e	X			Hydrogen	
TPH-p	X			TDS	
VOCs	X			TSS	X
		Hex Chrom	X		

Field Test Kit Analyses

	Unfiltered	Filtered
Fe^{2+} (mg/L)		
Mn^{2+} (mg/L)		

Filter where turbidity > 50 NTU

Downhole Dissolved Oxygen

Top (mg/L)	
Middle (mg/L)	
Bottom (mg/L)	

Sample Number: SEC ~~IR06MW42A~~ 0413H003 Sample Date/Time: 3/23/04 1210

QA/QC Sample(s)? ☐ None ☐ Field Dup ☒ rinsate ☐ MS/MSD

Dup. Sample Time 1245 Dup. Sample Number IR06MW42A/Rinsate

Sample Depth (ft. below TOC): ~12.5'

Reviewed by: S. Callahan

Date: 3/31/04

Method of Extraction: ☒ Submersible Pump ☐ Peristaltic Pump ☐ Disposable Bailer

Method of Sampling: ☒ Submersible Pump ☐ Peristaltic Pump ☐ Disposable Bailer

KLEINFELDER

MONITORING WELL SAMPLING SHEET

Well No.: DR06MW45R

Sheet 1 of __

Personnel: B. Metcalfe / D. NGWEN

Day: WED.

Date: 3/24/04

Casing Volume = 4.8 Gallons

Initial depth to water: 5.89 ft. below top of casing

[casing volume = water column height (ft) x 0.03 gal/ft (0.75-inch well) or 0.163 gal/ft (2-inch well) or 0.652 gal/ft (4-inch well)]

Organic Vapor Concentrations

Top of Casing: 0.0 ppm Background: 00 ppm

Groundwater Parameters

Time	Cumulative Volume Purged (L)	Discharge Rate (mL/min)	Depth to water (ft. below TOC)	Temperature (°C)	Specific Conductivity (mS/cm)	Dissolved Oxygen (mg/L)	pH	ORP (mv)	Turbidity (NTU)	PID/OVM (ppm)
8:53			9.33	17	14.0	0.3	7.5		20	0.8
9:04			8.69	– recharging						
9:16			8.52	– recharging						–
3/24										

After sampling and, if accessible, depth to bottom: ____ ft. below TOC Purged Dry? ____

Field Measurement Equipment Used

Equipment	Model	Serial Number	Equipment	Model	Serial Number
Water Quality Meter			PID		
Turbidimeter			Filter Apparatus		
Water Level Meter			Other ____		
Pump			Other ____		

Groundwater Samples Collected (check all that apply)

Analytes of Concern

Off-Site Lab

Metals	X		
PCBs			
Pesticides			
SVOCs			
TPH-e	X		
TPH-p	X		
VOCs	X		
		Hex Chrm	X

SEC 3/31/04

Fate and Transport Data

Off-Site Lab

Chloride	
Alkalinity	
Ethane	
Ethene	
Hydrogen	
TDS	
TSS	X

SEC 3/31/04

Field Test Kit Analyses

	Unfiltered	Filtered
Fe^{2+} (mg/L)		
Mn^{2+} (mg/L)		

Filter where turbidity > 50 NTU

Downhole Dissolved Oxygen

Top (mg/L)	
Middle (mg/L)	
Bottom (mg/L)	

SEC 3/31/04

Sample Number: none

Sample Date/Time: ——— SEC 3/31/04

QA/QC Sample(s)? [X] None [ ] Field Dup [ ] MS/MSD

Dup. Sample Time ____ Dup. Sample Number ____

Sample Depth (ft. below TOC): ____

Reviewed by: S. Callahan

Date: 3/31/04

Method of Extraction:
- [ ] Submersible Pump
- [ ] Peristaltic Pump
- [ ] Disposable Bailer

Method of Sampling:
- [ ] Submersible Pump
- [ ] Peristaltic Pump
- [ ] Disposable Bailer

Sampling of this well not performed

KLEINFELDER

MONITORING WELL SAMPLING SHEET

Well No.: IR06MW45A

Sheet 1 of ___

Personnel: Pete H. Lantanya S.

Day: Tuesday

Date: 3/30/04

Casing Volume = Gallons

Initial depth to water: 5.80 ft. below top of casing

[casing volume = water column height (ft) x 0.03 gal/ft (0.75-inch well) or 0.163 gal/ft (2-inch well) or 0.652 gal/ft (4-inch well)]

Organic Vapor Concentrations

Top of Casing: Ø ppm Background: Ø ppm

Groundwater Parameters

Time	Cumulative Volume Purged (L)	Discharge Rate (mL/min)	Depth to water (ft. below TOC)	Temperature (°C)	Specific Conductivity (mS/cm)	Dissolved Oxygen (mg/L)	pH	ORP (mv)	Turbidity (NTU)	Sal ~~PID/OVM~~ (ppm)
0852	0.5	50	6.35	15	27	-3.2	6.8	291	64	1.7
0900	1.5	~~50~~ 100	6.60	15	28	-3.4	6.8	263	64	1.7
0910	2	100	6.85	15	28	-3.4	6.8	255	64	1.7

After sampling and, if accessible, depth to bottom: ~13 ft. below TOC Purged Dry? N

Field Measurement Equipment Used

Equipment	Model	Serial Number	Equipment	Model	Serial Number
Water Quality Meter	Horiba	305005	PID	MiniRae	104577
Turbidimeter			Filter Apparatus		
Water Level Meter	Solinst	25570	Other ___		
Pump	Equipco	2" pump 68	Other ___		

Groundwater Samples Collected (check all that apply)

Analytes of Concern

Off-Site Lab

Metals	X		
PCBs			
Pesticides			
SVOCs			
TPH-e	X		
TPH-p	X		
VOCs	X		
		Hex Chrom	X

Fate and Transport Data

Off-Site Lab

Chloride	
Alkalinity	
Ethane	
Ethene	
Hydrogen	
TDS	
TSS	X

Field Test Kit Analyses

	Unfiltered	Filtered
Fe^{2+} (mg/L)		
Mn^{2+} (mg/L)		

Filter where turbidity > 50 NTU

Downhole Dissolved Oxygen

Top (mg/L)	
Middle (mg/L)	
Bottom (mg/L)	

Sample Number: 0414H015

Sample Date/Time: 3/30/04 0930

QA/QC Sample(s)? [X] None [ ] Field Dup [ ] MS/MSD

Dup. Sample Time ___ Dup. Sample Number ___

Sample Depth (ft. below TOC): ~12'

Reviewed by: S. Callahan

Date: 3/31/04

Method of Extraction:
- [X] Submersible Pump
- [ ] Peristaltic Pump
- [ ] Disposable Bailer

Method of Sampling:
- [X] Submersible Pump
- [ ] Peristaltic Pump
- [ ] Disposable Bailer

KLEINFELDER

MONITORING WELL SAMPLING SHEET

Well No.: 1R07MW19A

Personnel: B Metcalfe/D. Nguyen

Sheet 1 of 1

Day: TUESDAY

Date: 3/23/04

Casing Volume = 6.58 Gallons

Initial depth to water: 9.72 ft. below top of casing

[casing volume = water column height (ft) x 0.03 gal/ft (0.75-inch well) or 0.163 gal/ft (2-inch well) or 0.652 gal/ft (4-inch well)]

Organic Vapor Concentrations

Top of Casing: 0.1 ppm Background: 0.1 ppm

Groundwater Parameters

Time	Cumulative Volume Purged (L)	Discharge Rate (mL/min)	Depth to water (ft. below TOC)	Temperature (°C)	Specific Conductivity (mS/cm)	Dissolved Oxygen (mg/L)	pH	ORP (mv)	Turbidity (NTU)	~~PID/OVM~~ Salinity (ppm)
11:10		2000	9.22	16.8	26.5	5.73	6.74	253	~10	1.64
11:17	≈14	2050	9.43	17.7	28.2	5.24	6.74	242	~10	1.77
11:25	≈29	1600	9.40	18.0	28.5	5.58	6.76	262	~10	1.75
11:36	≈43	550	9.35	18.0	29.0	5.77	6.76	256	~10	1.79
11:53			9.25							

After sampling and, if accessible, depth to bottom: 15.6 ft. below TOC Purged Dry? N

Field Measurement Equipment Used

Equipment	Model	Serial Number	Equipment	Model	Serial Number
Water Quality Meter	Horiba U10	305006	PID	MINI RAE	104541
Turbidimeter			Filter Apparatus		
Water Level Meter			Other ORP	ONKTON	36650-02
Pump GRUNDFOS	19106003	02082204	Other		

Groundwater Samples Collected (check all that apply)

Analytes of Concern	Off-Site Lab			Fate and Transport Data	Off-Site Lab	Field Test Kit Analyses	Unfiltered	Filtered
Metals	X			Chloride		Fe^{2+} (mg/L)		
PCBs				Alkalinity		Mn^{2+} (mg/L)		
Pesticides				Ethane		Filter where turbidity > 50 NTU		
SVOCs				Ethene		Downhole Dissolved Oxygen		
TPH-e	X			Hydrogen		Top (mg/L)		
TPH-p	X			TDS		Middle (mg/L)		
VOCs	X			TSS	X	Bottom (mg/L)		
		Hex Chrom	X					

Sample Number: 0413M003

Sample Date/Time: 3/23/04 11:40 AM

QA/QC Sample(s)? ☐ None ☒ Field Dup ☒ MS/MSD

Dup. Sample Time 11:13 Dup. Sample Number 0413M004

Sample Depth (ft. below TOC): ≈16.5

Reviewed by: S. Callahan

Date: 3/31/04

Method of Extraction:
- ☒ Submersible Pump
- ☐ Peristaltic Pump
- ☐ Disposable Bailer

Method of Sampling:
- ☒ Submersible Pump
- ☐ Peristaltic Pump
- ☐ Disposable Bailer

TB= 1R07TB001

KLEINFELDER

MONITORING WELL SAMPLING SHEET

Well No.: IR07MW20A1

Sheet 1 of ___

Personnel: B. Metcalf/RN Guren

Day: Wed

Date: 3/24/04

Casing Volume = 9.2 Gallons

Initial depth to water: 9.20 ft. below top of casing

[casing volume = water column height (ft) x 0.03 gal/ft (0.75-inch well) or 0.163 gal/ft (2-inch well) or 0.652 gal/ft (4-inch well)]

Organic Vapor Concentrations

Top of Casing: 0.1 ppm Background: 0.0 ppm

Groundwater Parameters

Time	Cumulative Volume Purged (L)	Discharge Rate (mL/min)	Depth to water (ft. below TOC)	Temperature (°C)	Specific Conductivity (mS/cm)	Dissolved Oxygen (mg/L)	pH	ORP (mv)	Turbidity (NTU)	PID/OVM (ppm)
10:38	4	1900	9.29	16	15	6.2	7.6	289	21	0.9
10:45	18	1900	9.29	17	16	5.9	7.7	304	21	0.9
10:53	34	2000	9.29	16	16	5.7	7.7	317	21	0.9
10:56				16	16	5.6	7.7		21	0.9
11:15			9.28							

After sampling and, if accessible, depth to bottom: 23.38 ft. below TOC Purged Dry? N

Field Measurement Equipment Used

Equipment	Model	Serial Number	Equipment	Model	Serial Number
Water Quality Meter	HORIBA	U-10 306007	PID	MiniRae	104541
Turbidimeter			Filter Apparatus		
Water Level Meter	SOLINST	23571	Other ORP	OAKTON	35650-2
Pump	GRUNDFOS	02082246	Other		

Groundwater Samples Collected (check all that apply)

Analytes of Concern				Fate and Transport Data			
Off-Site Lab				*Off-Site Lab*		*Field Test Kit Analyses*	
Metals	X			Chloride			Unfiltered / Filtered
PCBs				Alkalinity		Fe^{2+} (mg/L)	
Pesticides				Ethane		Mn^{2+} (mg/L)	
SVOCs				Ethene		Filter where turbidity > 50 NTU	
TPH-e	X			Hydrogen		*Downhole Dissolved Oxygen*	
TPH-p	X			TDS		Top (mg/L)	
VOCs	X			TSS	X	Middle (mg/L)	
		Hex Chrom	X			Bottom (mg/L)	

Sample Number: 0413M0056 TE 3/24/04 Sam 3/24/04 Sample Date/Time: 3/24/04 10:57

QA/QC Sample(s)? ☐ None ☒ Field Dup ☒ MS/MSD

Dup. Sample Time 10:57 Dup. Sample Number 0413M0077 + RINSATE SAMPLE, 11:30

Sample Depth (ft. below TOC): ≈15'

Reviewed by: S. Callahan

Date: 3/31/04

Method of Extraction:
- ☒ Submersible Pump
- ☐ Peristaltic Pump
- ☐ Disposable Bailer

Method of Sampling:
- ☒ Submersible Pump
- ☐ Peristaltic Pump
- ☐ Disposable Bailer

TB = IR07TB002

KLEINFELDER

MONITORING WELL SAMPLING SHEET

Well No.: IR07MW21A1

Sheet 1 of 1

Personnel: B. Metcalfe / D. NGUYEN

Day: THURS

Date: 3/25/04

Casing Volume = 3.65 Gallons

Initial depth to water: 14.26 ft. below top of casing

[casing volume = water column height (ft) x 0.03 gal/ft (0.75-inch well) or 0.163 gal/ft (2-inch well) or 0.652 gal/ft (4-inch well)]

Organic Vapor Concentrations

Top of Casing: 0.2 ppm Background: 0.1 ppm

Groundwater Parameters

Time	Cumulative Volume Purged (L)	Discharge Rate (mL/min)	Depth to water (ft. below TOC)	Temperature (°C)	Specific Conductivity (mS/cm)	Dissolved Oxygen (mg/L)	pH	ORP (mv)	Turbidity (NTU)	SALINITY ~~PID/OVM (ppm)~~
11:31	4	2000	14.29	16.3	1.62	-0.51	6.70	47	256	0.07
11:37	16	2000	14.30	16.7	1.64	-0.54	6.72	51	256	0.07
11:41	24	2000	14.30	16.6	1.63	-0.51	6.71	64	256	0.07
12:08			14.30							

After sampling and, if accessible, depth to bottom: 19.86 ft. below TOC

Purged Dry? N

Field Measurement Equipment Used

Equipment	Model	Serial Number	Equipment	Model	Serial Number
Water Quality Meter	HERIBA U10	3U5006	PID	MinRae	104542-1 - Bm 3/25/04
Turbidimeter			Filter Apparatus		
Water Level Meter	SOLINST	23983	Other ORP	OAKTEN	68X247827
Pump	GRUNFOS	0208 2264	Other		

Groundwater Samples Collected (check all that apply)

Analytes of Concern				Fate and Transport Data		
Off-Site Lab				*Off-Site Lab*		*Field Test Kit Analyses*
Metals	X			Chloride		Unfiltered / Filtered
PCBs				Alkalinity		Fe^{2+} (mg/L)
Pesticides				Ethane		Mn^{2+} (mg/L)
SVOCs				Ethene		Filter where turbidity > 50 NTU
TPH-e	X			Hydrogen		*Downhole Dissolved Oxygen*
TPH-p	X			TDS	X	Top (mg/L)
VOCs	X			TSS	X	Middle (mg/L)
		Hex Chrom	X	Salinity	X	Bottom (mg/L)

Sample Number: 0413M010

Sample Date/Time: 3/25/04 11:45

QA/QC Sample(s)? [X] None [ ] Field Dup [ ] MS/MSD

Dup. Sample Time ____ Dup. Sample Number ____

Sample Depth (ft. below TOC): 17'

Reviewed by: S. Callahan

Date: 3/31/04

Method of Extraction:
- [X] Submersible Pump
- [ ] Peristaltic Pump
- [ ] Disposable Bailer

Method of Sampling:
- [X] Submersible Pump
- [ ] Peristaltic Pump
- [ ] Disposable Bailer

KLEINFELDER

MONITORING WELL SAMPLING SHEET

Well No.: 1R07 MW23A

Personnel: R. Hollan

Sheet ___ of ___

Day: Wed

Date: 3-24-04

Casing Volume = Gallons

Initial depth to water: 13.00 ft. below top of casing

[casing volume = water column height (ft) x 0.03 gal/ft (0.75-inch well) or 0.163 gal/ft (2-inch well) or 0.652 gal/ft (4-inch well)]

Organic Vapor Concentrations

Top of Casing: Ø ppm Background: Ø ppm

Groundwater Parameters

Time	Approx Cumulative Volume Purged (L)	Approx Discharge Rate (mL/min)	Depth to water (ft. below TOC)	Temperature (°C)	Specific Conductivity (mS/cm)	Dissolved Oxygen (mg/L)	pH	ORP (mv)	Turbidity (NTU)	Sal ~~PID/OVM~~ (ppm)
1212	1	200	13.05	18.6	1.52	4.83	7.01	182	7	.07
1217	2	"	13.21	19.8	1.52	5.15	7.01	180	2	0.07
1224	3	"	13.30	20.8	1.52	5.06	7.02	191	10	0.07
1229	5	300	13.30	20.0	1.51	5.89	7.05	183	10	0.07
1231	6	"	13.30	19.9	1.51	6.77	7.08	189	10	0.07
1233	6.5	"	13.20	21.4	1.51	7.89	7.04	202	10	0.06
1237	10	"	13.25	21.4	1.51	8.04	7.06	185	10	0.07
1240						8.04				

After sampling and, if accessible, depth to bottom: ___ ft. below TOC Purged Dry? NO

Field Measurement Equipment Used

Equipment	Model	Serial Number	Equipment	Model	Serial Number
Water Quality Meter			PID	Mini Rae	104517
Turbidimeter			Filter Apparatus		
Water Level Meter			Other Horiba		305006
Pump	Horiba		Other		

Groundwater Samples Collected (check all that apply)

Analytes of Concern (Off-Site Lab)				Fate and Transport Data (Off-Site Lab)	
Metals	X			Chloride	
PCBs				Alkalinity	
Pesticides				Ethane	
SVOCs				Ethene	
TPH-e	X			Hydrogen	
TPH-p	X			TDS	
VOCs	X			TSS	X
		Hex Chrom	X		

Field Test Kit Analyses

	Unfiltered	Filtered
Fe^{2+} (mg/L)		
Mn^{2+} (mg/L)		

Filter where turbidity > 50 NTU

Downhole Dissolved Oxygen

Top (mg/L)	
Middle (mg/L)	
Bottom (mg/L)	

Sample Number: ~~1R07MW23A~~ 0413H005 Sample Date/Time: 3/24/04 1240

QA/QC Sample(s)? ☐ None ☐ Field Dup ☒ Rinsate ☐ MS/MSD

Dup. Sample Time _____ Dup. Sample Number _____

Sample Depth (ft. below TOC): _____

Reviewed by: S. Callahan

Date: 3/31/04

Method of Extraction:
- ☒ Submersible Pump
- ☐ Peristaltic Pump
- ☐ Disposable Bailer

Method of Sampling:
- ☒ Submersible Pump
- ☐ Peristaltic Pump
- ☐ Disposable Bailer

KLEINFELDER

MONITORING WELL SAMPLING SHEET

Well No.: IR07MW24A

Sheet 1 of ___

Personnel: Pete H. Latanya S

Day: Thursday

Date: 3/25/04

Casing Volume = Gallons

Initial depth to water: 11.88 ft. below top of casing

[casing volume = water column height (ft) x 0.03 gal/ft (0.75-inch well) or 0.163 gal/ft (2-inch well) or 0.652 gal/ft (4-inch well)]

Organic Vapor Concentrations

Top of Casing: 1.2 ppm Background: 0.1 ppm

Groundwater Parameters

Time	Cumulative Volume Purged (L)	Discharge Rate (mL/min)	Depth to water (ft. below TOC)	Temperature (°C)	Specific Conductivity (mS/cm)	Dissolved Oxygen (mg/L)	pH	ORP (mv)	Turbidity (NTU)	Sal ~~PID/OVM~~ (ppm)
1118	2	1000	11.92	17	2.0	-1.0	6.6	296	11	0.1
1121	10	"	11.95	17	1.9	-1.3	6.6	305	11	0.1
1128	15	1000	11.95	18	1.9	-1.1	6.6	316	11	0.1
1133	20	1000	11.98	18	1.9	-1.3	6.6	318	11	0.1
1135	23	"	11.97	19	1.9	-1.2	6.6	312	11	0.1

After sampling and, if accessible, depth to bottom: 15 ft. below TOC

Purged Dry? No

Field Measurement Equipment Used

Equipment	Model	Serial Number	Equipment	Model	Serial Number
Water Quality Meter	Horiba	305005	PID	MiniRae	104517
Turbidimeter			Filter Apparatus		
Water Level Meter	Solinist	25570	Other ___		
Pump	Equipco	2" pump 68	Other ___		

Groundwater Samples Collected (check all that apply)

Analytes of Concern

Off-Site Lab

Metals	X		
PCBs			
Pesticides			
SVOCs			
TPH-e	X		
TPH-p	X		
VOCs	X		
		Hex Chrom	X

Fate and Transport Data

Off-Site Lab

Chloride	
Alkalinity	
Ethane	
Ethene	
Hydrogen	
TDS	X
TSS	X
Salinity	X

Field Test Kit Analyses

	Unfiltered	Filtered
Fe^{2+} (mg/L)		
Mn^{2+} (mg/L)		

Filter where turbidity > 50 NTU

Downhole Dissolved Oxygen

Top (mg/L)	
Middle (mg/L)	
Bottom (mg/L)	

Sample Number: 0413H007

Sample Date/Time: 3/25/04 1145

QA/QC Sample(s)? [X] None [ ] Field Dup [ ] MS/MSD

Dup. Sample Time ___ Dup. Sample Number ___

Sample Depth (ft. below TOC): ___

Reviewed by: S. Callahan

Date: 3/31/04

Method of Extraction:
- [X] Submersible Pump
- [ ] Peristaltic Pump
- [ ] Disposable Bailer

Method of Sampling:
- [X] Submersible Pump
- [ ] Peristaltic Pump
- [ ] Disposable Bailer

KLEINFELDER

MONITORING WELL SAMPLING SHEET

Well No.: IR07MW25A

Sheet 1 of ___

Personnel: B. METCALFE / DNGUYEN

Day: FRIDAY

Date: 3/26/04

Casing Volume = 7.61 Gallons

Initial depth to water: 9.99 ft. below top of casing

[casing volume = water column height (ft) x 0.03 gal/ft (0.75-inch well) or 0.163 gal/ft (2-inch well) or 0.652 gal/ft (4-inch well)]

Organic Vapor Concentrations

Top of Casing: 0.1 ppm Background: 0.1 ppm

Groundwater Parameters

Time	Cumulative Volume Purged (L)	Discharge Rate (mL/min)	Depth to water (ft. below TOC)	Temperature (°C)	Specific Conductivity (mS/cm)	Dissolved Oxygen (mg/L)	pH	ORP (mv)	Turbidity (NTU)	SALINITY ~~PID/OVM~~ (ppm)
10:22	7.2	2400	10.00	16.8	2.26	-0.09	6.04	11	233	0.10
10:28	14.4	2400	10.00	17.1	2.27	-0.13	6.08	10	227	0.10
10:29	24.0	≈ 2400	9.99 3/26/04							—
10:30	25.8	1850	9.99	17.4	2.30	-0.14	6.10	7	224	0.11
10:45			10.02							

After sampling and, if accessible, depth to bottom: 21.66 ft. below TOC

Purged Dry? N

Field Measurement Equipment Used

Equipment	Model	Serial Number	Equipment	Model	Serial Number
Water Quality Meter	HERIBA	U-10 305006	PID	MIMRAE	104541
Turbidimeter			Filter Apparatus		
Water Level Meter	SOLINST	23983	Other ORP	OAKTON	68X24827
Pump	GRUNDFOS	02082264	Other		

Groundwater Samples Collected (check all that apply)

Analytes of Concern				Fate and Transport Data		Field Test Kit Analyses	Unfiltered	Filtered
Off-Site Lab				Off-Site Lab				
Metals	X			Chloride		Fe^{2+} (mg/L)		
PCBs				Alkalinity		Mn^{2+} (mg/L)		
Pesticides				Ethane		Filter where turbidity > 50 NTU		
SVOCs				Ethene		Downhole Dissolved Oxygen		
TPH-e	X			Hydrogen		Top (mg/L)		
TPH-p	X			TDS	X	Middle (mg/L)		
VOCs	X			TSS	X	Bottom (mg/L)		
		Hex chrom	X	Salinity	X			

Sample Number: 04BM012

Sample Date/Time: 3/26/04 10:35

QA/QC Sample(s)? ☐ None ☐ Field Dup ☒ ~~MS/MSD~~ EQUIP BLANK BCM 3/26/04

Dup. Sample Time: 10:55 Dup. Sample Number: IR07EB004

Sample Depth (ft. below TOC): 15'

Method of Extraction:
- ☒ Submersible Pump
- ☐ Peristaltic Pump
- ☐ Disposable Bailer

Method of Sampling:
- ☒ Submersible Pump
- ☐ Peristaltic Pump
- ☐ Disposable Bailer

Reviewed by: S. Callahan

Date: 3/31/04

KLEINFELDER

26 Sec 3/30 MONITORING WELL SAMPLING SHEET

Well No.: IR07MW~~3~~A

Sheet 1 of 1

Personnel: S. Titus, L. Chavez

Day: Monday

Date: 3-29-04

Casing Volume = Gallons

Initial depth to water: 12.37 ft. below top of casing

casing volume = water column height (ft) x 0.03 gal/ft (0.75-inch well) or 0.163 gal/ft (2-inch well) or 0.652 gal/ft (4-inch well)]

Organic Vapor Concentrations
Top of Casing: 0.1 ppm Background: 0.1 ppm

Groundwater Parameters

Time	Cumulative Volume Purged (L)	Discharge Rate (mL/min)	Depth to water (ft. below TOC)	Temperature (°C)	Specific Conductivity (mS/cm)	Dissolved Oxygen (mg/L)	pH	ORP (mv)	Turbidity (NTU)	PID/OVM (ppm)	sal. %
0909	0	~500	12.38		37						
0914	1	~500	12.40	18		2.7	6.7	129	10	0.1	2.4
0917	2.5	~500	12.41	19	37	2.4	6.8	135	20	0.1	2.3
0920	4	~500	12.41	20	37	2.5	6.8	139	20	0.1	2.4
0924	6	~500	12.41	20	37	2.4	6.8	140	20	0.1	2.4

ter sampling and, if accessible, pth to bottom: ft. below TOC Purged Dry? NO

Field Measurement Equipment Used

uipment	Model	Serial Number	Equipment	Model	Serial Number
ater Quality Meter	Horiba U	301010	PID	MiniRae	104517
rbidimeter	"	"	Filter Apparatus		
ter Level Meter	Solinst.	28398	Other		
mp.	Grundfos	01351430	Other		

Groundwater Samples Collected (check all that apply)

Analytes of Concern	Off-Site Lab			Fate and Transport Data	Off-Site Lab	
tals	X			Chloride		
:Bs				Alkalinity		
sticides				Ethane		
'OCs				Ethene		
H-e	X			Hydrogen		
H-p	X			TDS	X	
'Cs	X			TSS	X	
		Hex Chrom	X	Salinity	X	

Field Test Kit Analyses

	Unfiltered	Filtered
Fe^{2+} (mg/L)		
Mn^{2+} (mg/L)		

Filter where turbidity > 50 NTU

Downhole Dissolved Oxygen

Top (mg/L)	
Middle (mg/L)	
Bottom (mg/L)	

nple Number: 0414T002 Sample Date/Time: 0931 / 3-29-04

QC Sample(s)? [X] None [ ] Field Dup [ ] MS/MSD

. Sample Time _____ Dup. Sample Number _____

nple Depth (ft. below TOC): 15.37

iewed by: S. Callahan

Date: 3/31/04

Method of Extraction:
[X] Submersible Pump
[ ] Peristaltic Pump
[ ] Disposable Bailer

Method of Sampling:
[X] Submersible Pump
[ ] Peristaltic Pump
[ ] Disposable Bailer

KLEINFELDER

MONITORING WELL SAMPLING SHEET

Well No.: IR07MW27A

Sheet 1 of __

Personnel: B. METCALFE / D. NGUYEN

Day: WED

Date: 3/24/04

Casing Volume = 5.84 Gallons

Initial depth to water: 11.98 ft. below top of casing

[casing volume = water column height (ft) x 0.03 gal/ft (0.75-inch well) or 0.163 gal/ft (2-inch well) or 0.652 gal/ft (4-inch well)]

Organic Vapor Concentrations

Top of Casing: 2-6.8 ppm Background: 0.1 ppm

Groundwater Parameters

Time	Cumulative Volume Purged (L)	Discharge Rate (mL/min)	Depth to water (ft. below TOC)	Temperature (°C)	Specific Conductivity (mS/cm)	Dissolved Oxygen (mg/L)	pH	ORP (mv)	Turbidity (NTU)	Salinity PID/OVM (ppm)
14:18	2	≈2000	13.2							
14:20	BM 3/24 4.37	850	13.30	21	4.0	0.1	7.5	110	21	0.2
14:25	7.1	680	13.53	22	3.9	0.1	7.5	106	21	0.2
14:30	10.1	600	13.65 BM 3/24	22	3.7	0.1	7.5	111	21	0.2
14:35	12.4	450	13.78	22	3.5	0.2	7.6	110	21	0.2
14:40	14.4	≈400		23	3.4	0.2	7.6		21	0.2
14:53			15.56							

After sampling and, if accessible, depth to bottom: 20.94 ft. below TOC Purged Dry? N

Field Measurement Equipment Used

Equipment	Model	Serial Number	Equipment	Model	Serial Number
Water Quality Meter	Horiba U10	306007	PID	MiniRae	104541
Turbidimeter			Filter Apparatus		
Water Level Meter	Solinst	23571	Other ORP	BALTON	35650-02
Pump	GRUNDFOS	02082296	Other		

Groundwater Samples Collected (check all that apply)

Analytes of Concern	Off-Site Lab			Fate and Transport Data	Off-Site Lab	Field Test Kit Analyses	Unfiltered	Filtered
Metals	X			Chloride		Fe^{2+} (mg/L)		
PCBs	X			Alkalinity		Mn^{2+} (mg/L)		
Pesticides	X			Ethane		Filter where turbidity > 50 NTU		
SVOCs	X			Ethene		Downhole Dissolved Oxygen		
TPH-e	X			Hydrogen		Top (mg/L)		
TPH-p	X			TDS		Middle (mg/L)		
VOCs	X			TSS	X	Bottom (mg/L)		
		HexChrom	X					

Sample Number: 0413M008

Sample Date/Time: 3/24/03 14:45

QA/QC Sample(s)? X None ☐ Field Dup ☐ MS/MSD

Sample Time _____ Dup. Sample Number _____

Sample Depth (ft. below TOC): 17

Reviewed by: S. Callahan

Date: 3/31/04

Method of Extraction:
- X Submersible Pump
- ☐ Peristaltic Pump
- ☐ Disposable Bailer

Method of Sampling:
- X Submersible Pump
- ☐ Peristaltic Pump
- ☐ Disposable Bailer

TB= IR07TB002

KLEINFELDER

MONITORING WELL SAMPLING SHEET

Well No.: DR07MW28A

Sheet 1 of ___

Personnel: B. Metcalfe / D. Nguyen

Day: Tuesday

Date: 3/30/04

Casing Volume = 6.12 Gallons

Initial depth to water: 9.33 ft. below top of casing

[casing volume = water column height (ft) x 0.03 gal/ft (0.75-inch well) or 0.163 gal/ft (2-inch well) or 0.652 gal/ft (4-inch well)]

Organic Vapor Concentrations

Top of Casing: 0.1 ppm Background: 0.1 ppm

Groundwater Parameters

Time	Cumulative Volume Purged (L)	Discharge Rate (mL/min)	Depth to water (ft. below TOC)	Temperature (°C)	Specific Conductivity (mS/cm)	Dissolved Oxygen (mg/L)	pH	ORP (mv)	Turbidity (NTU)	SALINITY ~~PID/OVM~~ (ppm)
0917	1.6	800	9.44	17.2	.624	0.11	6.02	129	12	0.02
0923	7.0	900	9.44	18.6	.875	0.06	6.15	117	-10	0.03
0927	11.0	1000	9.45	18.9	1.28	0.04	6.19	122	-10	0.05
0932	15.4	875	9.45	18.9	1.32	0.04	6.21	115	-10	0.06

After sampling and, if accessible, depth to bottom: 18.71 ft. below TOC

Purged Dry? N

Field Measurement Equipment Used

Equipment	Model	Serial Number	Equipment	Model	Serial Number
Water Quality Meter	HERIBA-410	305006	PID	Mini Rae	104541
Turbidimeter			Filter Apparatus		
Water Level Meter	Solinst	28398	Other ORP	OAKTON	68X247827
Pump	Grundfos	C2082264	Other		

Groundwater Samples Collected (check all that apply)

Analytes of Concern

Off-Site Lab

Metals	X		
PCBs	X		
Pesticides	X		
SVOCs	X		
TPH-e	X		
TPH-p	X		
VOCs	X		
		Hex Chrom	X

Fate and Transport Data

Off-Site Lab

Chloride	
Alkalinity	
Ethane	
Ethene	
Hydrogen	
TDS	
TSS	X

Field Test Kit Analyses

	Unfiltered	Filtered
Fe^{2+} (mg/L)		
Mn^{2+} (mg/L)		

Filter where turbidity > 50 NTU

Downhole Dissolved Oxygen

Top (mg/L)	
Middle (mg/L)	
Bottom (mg/L)	

Sample Number: 0414M06

Sample Date/Time: 3/30/03 0935

QA/QC Sample(s)? [X] None [ ] Field Dup [ ] MS/MSD

Dup. Sample Time _____ Dup. Sample Number _____

Sample Depth (ft. below TOC): 2.16'

Reviewed by: S. Callahan

Date: 3/31/04

Method of Extraction:
- [X] Submersible Pump
- [ ] Peristaltic Pump
- [ ] Disposable Bailer

Method of Sampling:
- [X] Submersible Pump
- [ ] Peristaltic Pump
- [ ] Disposable Bailer

KLEINFELDER

MONITORING WELL SAMPLING SHEET

Well No.: TR07MW5-2

Sheet 1 of 1

Personnel: B. Metcalfe, D. Nguyen

Day: Mon

Date: 3/29/04

Casing Volume = 4.79 Gallons

Initial depth to water: 10.30 ft. below top of casing

[casing volume = water column height (ft) x 0.03 gal/ft (0.75-inch well) or 0.163 gal/ft (2-inch well) or 0.652 gal/ft (4-inch well)]

Organic Vapor Concentrations

Top of Casing: 0.1 ppm Background: 0.1 ppm

Groundwater Parameters

Time	Cumulative Volume Purged (L)	Discharge Rate (mL/min)	Depth to water (ft. below TOC)	Temperature (°C)	Specific Conductivity (mS/cm)	Dissolved Oxygen (mg/L)	pH	ORP (mv)	Turbidity (NTU)	~~PID/OVM~~ Snuwat BW 2/29 (ppm)
912	5.1	1700	10.31	16.4	40.7	0.56	6.75	82	255	2.55
917	13.1	1600	10.31	16.0	33.0	2.87	6.83	93	255	2.05
920	17.8	1575	10.32	16.4	31.2	3.17	6.85	110	255	1.96
924	24.8	1750	10.32	16.5	31.2	3.35	6.86	109	255	1.97
929	33.2	1675	10.33	17.7	31.6	3.27	6.85	122	255	1.97
0985			10.31							

After sampling and, if accessible, depth to bottom: 17.65 ft. below TOC

Purged Dry? N

Field Measurement Equipment Used

Equipment	Model	Serial Number	Equipment	Model	Serial Number
Water Quality Meter	HORIBA UNO	305006	PID	MiniRae	104541
Turbidimeter			Filter Apparatus		
Water Level Meter	Solinst	23998	Other ORP	OAKTON	35650-02
Pump	Grundfos	02082264	Other		

Groundwater Samples Collected (check all that apply)

Analytes of Concern				Fate and Transport Data			
Off-Site Lab				*Off-Site Lab*		*Field Test Kit Analyses*	
Metals	X			Chloride			Unfiltered / Filtered
PCBs				Alkalinity		Fe^{2+} (mg/L)	
Pesticides				Ethane		Mn^{2+} (mg/L)	
SVOCs				Ethene		Filter where turbidity > 50 NTU	
TPH-e	X			Hydrogen		*Downhole Dissolved Oxygen*	
TPH-p	X			TDS		Top (mg/L)	
VOCs	X			TSS	X	Middle (mg/L)	
		Hex Chrom	X			Bottom (mg/L)	

Sample Number: 0414M011

Sample Date/Time: 3/29/04 0935

QA/QC Sample(s)? [X] None [ ] Field Dup [ ] MS/MSD

Dup. Sample Time _____ Dup. Sample Number _____

Sample Depth (ft. below TOC): 13.51

Reviewed by: S. Callahan

Date: 3/31/04

Method of Extraction:
- [X] Submersible Pump
- [ ] Peristaltic Pump
- [ ] Disposable Bailer

Method of Sampling:
- [X] Submersible Pump
- [ ] Peristaltic Pump
- [ ] Disposable Bailer

KLEINFELDER

MONITORING WELL SAMPLING SHEET

Well No.: IR07MW S-4

Sheet 1 of ___

Personnel: Pete Holland

Day: Friday

Date: 3/26/04

Casing Volume = Gallons

Initial depth to water: 14.5 ft. below top of casing

[casing volume = water column height (ft) x 0.03 gal/ft (0.75-inch well) or 0.163 gal/ft (2-inch well) or 0.652 gal/ft (4-inch well)]

Organic Vapor Concentrations

Top of Casing: Ø ppm Background: ___ ppm

Groundwater Parameters

Time	Approx. Cumulative Volume Purged (L)	Approx. Discharge Rate (mL/min)	Depth to water (ft. below TOC)	Temperature (°C)	Specific Conductivity (mS/cm)	Dissolved Oxygen (mg/L)	pH	ORP (mv)	Turbidity (NTU)	Sal ~~Chlorine~~ (ppm)
1030	5	750	14.5	18	516	-1.8	6.8	43	25	0.3
1035	8	"	14.5	18	5.2	-2.0	6.8	45	24	0.3
1041	12	"	14.5	18	5.2	-2.0	6.8	43	25	0.3
1044	18	1000	14.5	18	5.2	-2.0	6.8	47	24	0.3
1050	25	"	14.5	18	5.2	-2.0	6.8	45	24	0.3

After sampling and, if accessible, depth to bottom: 20 ft. below TOC Purged Dry? ___

Field Measurement Equipment Used

Equipment	Model	Serial Number	Equipment	Model	Serial Number
Water Quality Meter	Horiba	305005	PID	MiniRae	104517
Turbidimeter			Filter Apparatus		
Water Level Meter	Solinst 101	83998	Other ___		
Pump			Other ___		

Groundwater Samples Collected (check all that apply)

Analytes of Concern (Off-Site Lab)				Fate and Transport Data (Off-Site Lab)	
Metals	X			Chloride	
PCBs				Alkalinity	
Pesticides				Ethane	
SVOCs				Ethene	
TPH-e	X			Hydrogen	
TPH-p	X			TDS	X
VOCs	X			TSS	X
		Hexchrom	X	Salinity	X

SEC 3/31/04

Field Test Kit Analyses

	Unfiltered	Filtered
Fe^{2+} (mg/L)		SEC 3/31/04
Mn^{2+} (mg/L)		

Filter where turbidity > 50 NTU

Downhole Dissolved Oxygen

Top (mg/L)
Middle (mg/L)
Bottom (mg/L)

SEC 3/31/04

Sample Number: 0413H010

Sample Date/Time: 3/26/04 1055

QA/QC Sample(s)? ☐ None ☐ Field Dup ☒ Insite ☐ MS/MSD

Dup. Sample Time 1120 Dup. Sample Number IR07EB0045

Sample Depth (ft. below TOC): 17

SEC 3/26/04

Reviewed by: S. Callahan

Date: 3/31/04

Method of Extraction:
- ☒ Submersible Pump
- ☐ Peristaltic Pump
- ☐ Disposable Bailer

Method of Sampling:
- ☒ Submersible Pump
- ☐ Peristaltic Pump
- ☐ Disposable Bailer

KLEINFELDER

MONITORING WELL SAMPLING SHEET

Well No.: IR10MW12A

Sheet 1 of 1

Personnel: BRIAN METCALFE/D.NGEUNG

Day: TUESDAY

Date: 3/23/04

Casing Volume = 7.97 Gallons

Initial depth to water: 5.58' ft. below top of casing

[casing volume = water column height (ft) x 0.03 gal/ft (0.75-inch well) or 0.163 gal/ft (2-inch well) or 0.652 gal/ft (4-inch well)]

Organic Vapor Concentrations

Top of Casing: 0 ppm Background: 0 ppm

Groundwater Parameters

Time	Cumulative Volume Purged (L)	Discharge Rate (mL/min)	Depth to water (ft. below TOC)	Temperature (°C)	Specific Conductivity (mS/cm)	Dissolved Oxygen (mg/L)	pH	ORP (mv)	Turbidity (NTU)	Salinity ~~PID/OVM (ppm)~~
9:21			6.05	15.1	4.31	0.14	7.11		-9	0.17
9:24	~~10~~ 7 gal	~~500~~ 2000/14.945								
9:28		~~2,3~~ 2,500	6.21	15.7	2.31	0.04	7.25	259	-10	0.10
9:32		2,375								
9:35			6.30	15.8	2.02	0.01	7.29	240	-10	0.09
9:38	15 gal.									
9:44			6.30	15.8	1.93	0.02	7.30		-10	0.09
9:46		2437								
9:48	18 gal									
10:00	≈25 gal		6.34							

After sampling and, if accessible, depth to bottom: 6.34 ft. below TOC — TOP OF WATER

Purged Dry? N

Field Measurement Equipment Used

Equipment	Model	Serial Number	Equipment	Model	Serial Number
Water Quality Meter	HORIBA-U10	305006	PID	Mini Rae	104541
Turbidimeter			Filter Apparatus		
Water Level Meter			Other ORP	CAICTON ISO 9001	35650-02
Pump GRUNDFOS	1A106003	02082264	Other		

Groundwater Samples Collected (check all that apply)

Analytes of Concern — Off-Site Lab				Fate and Transport Data — Off-Site Lab		Field Test Kit Analyses	Unfiltered	Filtered
Metals				Chloride		Fe^{2+} (mg/L)		
PCBs				Alkalinity		Mn^{2+} (mg/L)		
Pesticides				Ethane		Filter where turbidity > 50 NTU		
SVOCs				Ethene		Downhole Dissolved Oxygen		
TPH-e				Hydrogen		Top (mg/L)		
TPH-p				TDS		Middle (mg/L)		
VOCs	X			TSS	X	Bottom (mg/L)		
Hex Chrom	X							

Sample Number: 0413M002

Sample Date/Time: 3/23/04 9:53

QA/QC Sample(s)? [X] None [ ] Field Dup [ ] MS/MSD

Dup. Sample Time _____ Dup. Sample Number _____

Sample Depth (ft. below TOC): 212'

Reviewed by: S. Callahan

Date: 3/31/04

Method of Extraction:
- [X] Submersible Pump
- [ ] Peristaltic Pump
- [ ] Disposable Bailer

Method of Sampling:
- [X] Submersible Pump
- [ ] Peristaltic Pump
- [ ] Disposable Bailer

TB=1R10TB001

KLEINFELDER

MONITORING WELL SAMPLING SHEET

Well No.: 1R10MWBA1

Personnel: B.Metcalfe, D. NGUYEN

Day: MONDAY

Date: 3/22/04

Sheet 1 of 1

Casing Volume = 8.41 Gallons

Initial depth to water: 6.77 ft. below top of casing

[casing volume = water column height (ft) x 0.03 gal/ft (0.75-inch well) or 0.163 gal/ft (2-inch well) or 0.652 gal/ft (4-inch well)]

Organic Vapor Concentrations

Top of Casing 0.7 ppm Background: 0.3 ppm

Groundwater Parameters

Time	Cumulative Volume Purged (L)	Discharge Rate (mL/min)	Depth to water (ft. below TOC)	Temperature (°C)	Specific Conductivity (mS/cm)	Dissolved Oxygen (mg/L)	pH	ORP (mv)	Turbidity (NTU)	SALINITY PID/OVM (ppm)
~~13:55~~ 13:55										~~0.4~~ BKG 0.3
14:18		3/22/04		20	5.1	0.9	7.6		1.0	0.3
14:44		66	7.08'	19	4.2	0.3	7.6		26.0	0.2
14:52	3/22/04		7.14'	19	4.0	0.0	7.6		26.0	0.2
15:02		500mL/8.39 sec								
15:04			7.15	19	3.9	0.0	7.6	265	26.0	0.2
15:08		500mL 9.67 sec.								

After sampling and, if accessible, depth to bottom: ____ ft. below TOC Purged Dry? NO

Field Measurement Equipment Used

Equipment	Model	Serial Number	Equipment	Model	Serial Number
Water Quality Meter	HORIBA U-10	305606	PID	MiniRAE	104517
Turbidimeter			Filter Apparatus		
Water Level Meter	Solinst	23998	Other ____		
Pump			Other ____		

Groundwater Samples Collected (check all that apply)

Analytes of Concern (Off-Site Lab)				Fate and Transport Data (Off-Site Lab)	
Metals				Chloride	
PCBs				Alkalinity	
Pesticides				Ethane	
SVOCs				Ethene	
TPH-e				Hydrogen	
TPH-p				TDS	
VOCs	X			TSS	

Field Test Kit Analyses

	Unfiltered	Filtered
Fe^{2+} (mg/L)		
Mn^{2+} (mg/L)		

Filter where turbidity > 50 NTU

Downhole Dissolved Oxygen

Top (mg/L)	
Middle (mg/L)	
Bottom (mg/L)	

Sample Number: ~~1R10MW13AP~~ 0413M001 Sample Date/Time: 3/22/04 @ 15:15

QA/QC Sample(s)? [X] None [ ] Field Dup [ ] MS/MSD

Dup. Sample Time ____ Dup. Sample Number ____

Sample Depth (ft. below TOC): ____

Reviewed by: S. Gallahan

Date: 3/31/04

Method of Extraction:
- [X] Submersible Pump
- [ ] Peristaltic Pump
- [ ] Disposable Bailer

Method of Sampling:
- [X] Submersible Pump
- [ ] Peristaltic Pump
- [ ] Disposable Bailer

TB= 1R10TB001

KLEINFELDER

MONITORING WELL SAMPLING SHEET

Well No.: IR10MW14A

Personnel: Pete Hollard, Latanya S.

Day: Monday 3/22/04

Sheet ___ of ___

Date: 3/22/04

Casing Volume = Gallons

Initial depth to water: 7.19 ft. below top of casing

[casing volume = water column height (ft) x 0.03 gal/ft (0.75-inch well) or 0.163 gal/ft (2-inch well) or 0.652 gal/ft (4-inch well)]

Organic Vapor Concentrations

Top of Casing: 0.5 ppm Background: 0.5 ppm

Groundwater Parameters

Time	Cumulative Volume Purged (L)	Discharge Rate (mL/min)	Depth to water (ft. below TOC)	Temperature (°C)	Specific Conductivity (mS/cm)	Dissolved Oxygen (mg/L)	pH	ORP (mv)	Turbidity (NTU)	~~PID/OVM~~ Salinity (ppm)
1450	~1	~50	7.19	17.3	3.28	0.51	7.32	193	253	0.16
1500	~1	~50	7.29	19.4	3.25	0.06	7.43		253	0.16
1507	1	~50	7.26	19.5	3.28	0.06	7.44		251	0.16
1515	2	100	7.26	19.0	3.28	0.18	7.44	421	253	0.16
1520	3	100	7.30	21.2	3.32	0.08	7.43	407	252	0.16

After sampling and, if accessible, depth to bottom: 7.35 ft. below TOC Purged Dry? N

Field Measurement Equipment Used

Equipment	Model	Serial Number	Equipment	Model	Serial Number
Water Quality Meter	Horiba U-10	305005	PID	Mini Rae	104517
Turbidimeter			Filter Apparatus		
Water Level Meter	Solinst 101	23571	Other ___		
Pump			Other ___		

Groundwater Samples Collected (check all that apply)

Analytes of Concern (Off-Site Lab)				Fate and Transport Data: Off-Site Lab		Fate and Transport Data: Field Test Kit Analyses	Unfiltered	Filtered
Metals				Chloride		Fe^{2+} (mg/L)		
PCBs				Alkalinity		Mn^{2+} (mg/L)		
Pesticides				Ethane		Filter where turbidity > 50 NTU		
SVOCs				Ethene		Downhole Dissolved Oxygen		
TPH-e				Hydrogen		Top (mg/L)		
TPH-p				TDS		Middle (mg/L)		
VOCs	X			TSS		Bottom (mg/L)		

Sample Number: 0413H001 Sample Date/Time: 1545 3/22/04

QA/QC Sample(s)? [X] None [ ] Field Dup [ ] MS/MSD

Dup. Sample Time ___ Dup. Sample Number ___

Sample Depth (ft. below TOC): ___

Reviewed by: S. Callahan

Date: 3/31/04

Method of Extraction: [X] Submersible Pump [ ] Peristaltic Pump [ ] Disposable Bailer

Method of Sampling: [X] Submersible Pump [ ] Peristaltic Pump [ ] Disposable Bailer

TB = IR10TB001

KLEINFELDER

MONITORING WELL SAMPLING SHEET

Well No.: IR10 MW28A

Personnel: Pete H. Latanya S.

Sheet 1 of ___

Day: Wednesday

Date: 3/24/04

Casing Volume = Gallons

Initial depth to water: 10.57 ft. below top of casing

[casing volume = water column height (ft) x 0.03 gal/ft (0.75-inch well) or 0.163 gal/ft (2-inch well) or 0.652 gal/ft (4-inch well)]

Organic Vapor Concentrations

Top of Casing: Ø ppm Background: Ø ppm

Groundwater Parameters

Time	Approx Cumulative Volume Purged (L)	Approx Discharge Rate (mL/min)	Depth to water (ft. below TOC)	Temperature (°C)	Specific Conductivity (mS/cm)	Dissolved Oxygen (mg/L)	pH	ORP (mv)	Turbidity (NTU)	PID/OVM (ppm)
0852	0	~100		19.4	3.91	3.46	7.15	246	10	0.19
0859	0.5	~100		20.3	3.94	3.99	7.21	255	10	0.19
0905	0.8	~100		21.3	3.88	3.54	7.21	261	10	0.19
0910	1.0	~100		22.3	3.92	4.02	7.22	285	10	0.19

After sampling and, if accessible, depth to bottom: ___ ft. below TOC Purged Dry? N

Field Measurement Equipment Used

Equipment	Model	Serial Number	Equipment	Model	Serial Number
Water Quality Meter			PID	Mini Rae	104517
Turbidimeter		305006	Filter Apparatus		
Water Level Meter	Solinst	23998	Other ___		
Pump			Other ___		

Groundwater Samples Collected (check all that apply)

Analytes of Concern (Off-Site Lab)				Fate and Transport Data (Off-Site Lab)	
Metals	X			Chloride	
PCBs				Alkalinity	
Pesticides				Ethane	
SVOCs				Ethene	
TPH-e	X			Hydrogen	
TPH-p	X			TDS	
VOCs	X			TSS	X
		Hex Chrom	X		

Field Test Kit Analyses

	Unfiltered	Filtered
Fe^{2+} (mg/L)		
Mn^{2+} (mg/L)		

Filter where turbidity > 50 NTU

Downhole Dissolved Oxygen

Top (mg/L)	
Middle (mg/L)	
Bottom (mg/L)	

Sample Number: ~~IR10 MW28A~~ 04131006 Sample Date/Time: 3/24/04 0930

QA/QC Sample(s)? [X] None [ ] Field Dup [ ] MS/MSD

Dup. Sample Time ___ Dup. Sample Number ___

Sample Depth (ft. below TOC): ___

Reviewed by: S. Callahan

Date: 3/31/04

Method of Extraction: [X] Submersible Pump [ ] Peristaltic Pump [ ] Disposable Bailer

Method of Sampling: [X] Submersible Pump [ ] Peristaltic Pump [ ] Disposable Bailer

Sampling discontinued due to slow recharge rate.

KLEINFELDER

MONITORING WELL SAMPLING SHEET

Well No.: IR10MW28A

Sheet 2 of ___

Personnel: Latanyis, Pete H

Day: Thursday

Date: 3-25-04

Casing Volume = Gallons

Initial depth to water: 13. ft. below top of casing

[casing volume = water column height (ft) x 0.03 gal/ft (0.75-inch well) or 0.163 gal/ft (2-inch well) or 0.652 gal/ft (4-inch well)]

Organic Vapor Concentrations

Top of Casing: 0 ppm Background: 0 ppm

Groundwater Parameters

Time	Cumulative Volume Purged (L)	Discharge Rate (mL/min)	Depth to water (ft. below TOC)	Temperature (°C)	Specific Conductivity (mS/cm)	Dissolved Oxygen (mg/L)	pH	ORP (mv)	Turbidity (NTU)	PID/OVM (ppm)
0858	0	~100		20.1	3.93	3.65	7.16	221	10	0.18
0905	0	~100		20.3	3.97	3.98	7.16	245	10	0.18

After sampling and, if accessible, depth to bottom: ___ ft. below TOC Purged Dry? N

Field Measurement Equipment Used

Equipment	Model	Serial Number	Equipment	Model	Serial Number
Water Quality Meter			PID	MiniRay	104517
Turbidimeter		305006	Filter Apparatus		
Water Level Meter	Solinst	23998	Other ___		
Pump			Other ___		

Groundwater Samples Collected (check all that apply)

Analytes of Concern	Off-Site Lab			Fate and Transport Data	Off-Site Lab	
Metals	X			Chloride		
PCBs				Alkalinity		
Pesticides				Ethane		
SVOCs				Ethene		
TPH-e	X			Hydrogen		
TPH-p	X			TDS		
VOCs	X			TSS	X	
		Hex Chrom	X			

Field Test Kit Analyses

	Unfiltered	Filtered
Fe^{2+} (mg/L)		
Mn^{2+} (mg/L)		

Filter where turbidity > 50 NTU

Downhole Dissolved Oxygen

Top (mg/L)	
Middle (mg/L)	
Bottom (mg/L)	

Sample Number: IR10MW28A

Sample Date/Time: 3/25/04 / 915

QA/QC Sample(s)? [X] None [ ] Field Dup [ ] MS/MSD

Dup. Sample Time ___ Dup. Sample Number ___

Sample Depth (ft. below TOC): ___

Reviewed by: S. Gilham

Date: 3/31/04

Method of Extraction:
- [X] Submersible Pump
- [ ] Peristaltic Pump
- [ ] Disposable Bailer

Method of Sampling:
- [✓] Submersible Pump
- [ ] Peristaltic Pump
- [ ] Disposable Bailer

KLEINFELDER

MONITORING WELL SAMPLING SHEET

Well No.: IR10 MW31 A1

Sheet 1 of ___

Personnel: Pete, Latanya

Day: Tuesday

Date: 3/23/04

Casing Volume = Gallons

Initial depth to water: 10.36 ft. below top of casing

[casing volume = water column height (ft) x 0.03 gal/ft (0.75-inch well) or 0.163 gal/ft (2-inch well) or 0.652 gal/ft (4-inch well)]

Organic Vapor Concentrations

Top of Casing: Ø ppm Background: Ø ppm

Groundwater Parameters

Time	Approx Cumulative Volume Purged (L)	Approx. Discharge Rate (mL/min)	Depth to water (ft. below TOC)	Temperature (°C)	Specific Conductivity (mS/cm)	Dissolved Oxygen (mg/L)	pH	ORP (mv)	Turbidity (NTU)	Sal ~~PID/OVM (ppm)~~
0937	2	~300	11.23	18	16	2.9	7.3	306	0	0.9
0941	~10	~100		19	16	2.4	7.3		0	0.9
0950	~13	~100	10.80	21	16	1.7	7.3	283	0	0.9
0955	~20	~200	11.02	21	16	1.8	7.3	268	0	0.9
1005	~30	~300	11.00	20	16	1.5	7.3	269	0	0.9

After sampling and, if accessible, depth to bottom: 17 ft. below TOC Purged Dry? N

Field Measurement Equipment Used

Equipment	Model	Serial Number	Equipment	Model	Serial Number
Water Quality Meter	Horiba	305005	PID	MiniRae	104517
Turbidimeter			Filter Apparatus		
Water Level Meter	Solinst 101	23571	Other ___		
Pump			Other ___		

Groundwater Samples Collected (check all that apply)

Analytes of Concern	Off-Site Lab		
Metals	X		
PCBs			
Pesticides			
SVOCs			
TPH-e	X		
TPH-p	X		
VOCs	X		
		Hex Chrom	X

Fate and Transport Data	Off-Site Lab
Chloride	
Alkalinity	
Ethane	
Ethene	
Hydrogen	
TDS	
TSS	X

Field Test Kit Analyses	Unfiltered	Filtered
Fe^{2+} (mg/L)		
Mn^{2+} (mg/L)		

Filter where turbidity > 50 NTU

Downhole Dissolved Oxygen	
Top (mg/L)	
Middle (mg/L)	
Bottom (mg/L)	

Sample Number: 0413H002

Sample Date/Time: 3/23/04 1010

QA/QC Sample(s)? [X] None [ ] Field Dup [ ] MS/MSD

Dup. Sample Time ___ Dup. Sample Number ___

Sample Depth (ft. below TOC): ___

Reviewed by: S. Callahan

Date: 3/31/04

Method of Extraction:
- [X] Submersible Pump
- [ ] Peristaltic Pump
- [ ] Disposable Bailer

Method of Sampling:
- [X] Submersible Pump
- [ ] Peristaltic Pump
- [ ] Disposable Bailer

Bm 3/30/04

KLEINFELDER
MONITORING WELL SAMPLING SHEET

Well No.: IRM10MW33A

Sheet ___ of ___

Sampler: B. Metcalfe, D. Nguyen

Day: Tuesday

Date: 3/30/04

Casing Volume = Gallons

Initial depth to water: 6.85 ft. below top of casing

Casing volume = water column height (ft) x 0.03 gal/ft (0.75-inch well) or 0.163 gal/ft (2-inch well) or 0.652 gal/ft (4-inch well)]

Organic Vapor Concentrations
Top of Casing: 0.3 ppm Background: 0.1 ppm

Groundwater Parameters

Time	Cumulative Volume Purged (L)	Discharge Rate (mL/min)	Depth to water (ft. below TOC)	Temperature (°C)	Specific Conductivity (mS/cm)	Dissolved Oxygen (mg/L)	pH	ORP (mv)	Turbidity (NTU)	~~PID/OVM~~ SALINITY (ppm) BM 3/30/04
1130	1	1000	6.91	15.7	4.11	0.22	6.88		62	0.20
1133	2.9	625	6.91	17.8	4.13	0.03	6.96	-69	38	0.21
1143	7.9	500	6.88 (1)	19.2	4.02	0.07	6.99		52	0.20
1159 (2)	1	1000	6.90	20.0	2.85	0.31	7.11	(3) -99/Ur	70	0.14
1202	3.7	900	6.91	19.4	3.05	0.46	7.09	-99/Ur	71	0.15
1205	6.7	1000	6.92	19.1	3.03	0.61	7.10	-99/Ur	70	0.18
1209	10.7	1000	6.93	18.9	2.98	0.66	7.11		69	0.14

After sampling and, if accessible, depth to bottom: 15.65 ft. below TOC Purged Dry? N

Field Measurement Equipment Used

Equipment	Model	Serial Number	Equipment	Model	Serial Number
Water Quality Meter	HORIBA U-10	305006	PID	MIMRAE	104541
Turbidimeter			Filter Apparatus		
Water Level Meter	SOLINST	28398	Other ORP	OAKTON	35650-02
Pump	GRUNDFOS	02082264	Other		

Groundwater Samples Collected (check all that apply)

Analytes of Concern	Off-Site Lab			Fate and Transport Data	Off-Site Lab	Field Test Kit Analyses	Unfiltered	Filtered
Metals				Chloride		Fe^{2+} (mg/L)		
PCBs				Alkalinity		Mn^{2+} (mg/L)		
Pesticides				Ethane		Filter where turbidity > 50 NTU		
SVOCs	X			Ethene		Downhole Dissolved Oxygen		
TPH-e				Hydrogen		Top (mg/L)		
TPH-p				TDS		Middle (mg/L)		
VOCs	X			TSS		Bottom (mg/L)		

Sample Number: 0414M017 BM 3/30/04 Sample Date/Time: 3/30/04 1215

VOC Sample(s)? ☐ None ☒ ~~Field Dup~~ EQUIPMENT BLANK ☒ MS/MSD

Dup. Sample Time 1235 Dup. Sample Number IR10EB011

Sample Depth (ft. below TOC): 11'

Method of Extraction:
- ☒ Submersible Pump
- ☒ Peristaltic Pump
- ☐ Disposable Bailer

Method of Sampling:
- ☒ Submersible Pump
- ☐ Peristaltic Pump
- ☐ Disposable Bailer

Reviewed by: S. Callahan

Date: 3/31/04

KLEINFELDER

MONITORING WELL SAMPLING SHEET

Well No.: IR10MW59A

Sheet ___ of ___

Personnel: Pete H, LaTanya S

Day: Tuesday

Date: 3-30-04

Casing Volume = ~~Gallons~~ PH

Initial depth to water: 10.02 ft. below top of casing

(casing volume = water column height (ft) x 0.03 gal/ft (0.75-inch well) or 0.163 gal/ft (2-inch well) or 0.652 gal/ft (4-inch well))

Organic Vapor Concentrations

Top of Casing: 0.1 ppm Background: 0.1 ppm

Groundwater Parameters

Time	Cumulative Volume Purged (L)	Discharge Rate (mL/min)	Depth to water (ft. below TOC)	Temperature (°C)	Specific Conductivity (mS/cm)	Dissolved Oxygen (mg/L)	pH	ORP (mv)	Turbidity (NTU)	~~PID/OVM~~ Eco (ppm)
1050	3	500	11.0	16	3.6	-0.9	7.8	282	18	0.2
1056	6	300	11.3	17	3.6	0.6	7.9	257	20	0.2
1102	8	300	11.5	17	3.6	0.8	7.9	259	21	0.2
1108	10	~~300~~	12.0	18	3.6	0.9	7.9	259	19	0.2

After sampling and, if accessible, depth to bottom: ~~15~~ ? ft. below TOC Purged Dry? NO

Field Measurement Equipment Used

Equipment	Model	Serial Number	Equipment	Model	Serial Number
Water Quality Meter	Horiba	305005	PID	Mini Rae	4085714
Turbidimeter			Filter Apparatus		
Water Level Meter	Solinst	25570	Other		
Pump	Grundfos	2" pump 68	Other		

Groundwater Samples Collected (check all that apply)

Analytes of Concern (Off-Site Lab)				Fate and Transport Data (Off-Site Lab)				Field Test Kit Analyses	Unfiltered	Filtered	
Metals				Chloride				Fe^{2+} (mg/L)			
PCBs				Alkalinity				Mn^{2+} (mg/L)			
Pesticides				Ethane				Filter where turbidity > 50 NTU			
SVOCs				Ethene				Downhole Dissolved Oxygen			
TPH-e				Hydrogen				Top (mg/L)			
TPH-p				TDS				Middle (mg/L)			
VOCs	X			TSS				Bottom (mg/L)			

SEC 3/31/04

SEC 3/31/04

SEC 3/31/04

Sample Number: ~~IR10MW59A~~ 0414HPNS Sample Date/Time: 3/30/04 1120

QC Sample(s)? ☐ None ☐ Field Dup ☒ Blank ☐ MS/MSD

Dup. Sample Time 1145 Dup. Sample Number IR10EB010

Sample Depth (ft. below TOC): 14

Reviewed by: S. Callahan

Date: 3/31/04

Method of Extraction: ☒ Submersible Pump ☐ Peristaltic Pump ☐ Disposable Bailer

Method of Sampling: ☒ Submersible Pump ☐ Peristaltic Pump ☐ Disposable Bailer

Well No. IR10MW59A should be IR10MW74A. Other information on this page is correct.

KLEINFELDER

MONITORING WELL SAMPLING SHEET

Well No.: IR10MW59A

Sheet ___ of ___

Personnel: Pete H. LaTanya S

Day: Tuesday

Date: 3-30-04

Casing Volume = ~~Gallons~~ PH

Initial depth to water: 10.02 ft. below top of casing

[casing volume = water column height (ft) x 0.03 gal/ft (0.75-inch well) or 0.163 gal/ft (2-inch well) or 0.652 gal/ft (4-inch well)]

Organic Vapor Concentrations

Top of Casing: 0.1 ppm Background: 0.1 ppm

Groundwater Parameters

Time	Cumulative Volume Purged (L)	Discharge Rate (mL/min)	Depth to water (ft. below TOC)	Temperature (°C)	Specific Conductivity (mS/cm)	Dissolved Oxygen (mg/L)	pH	ORP (mv)	Turbidity (NTU)	Sol PID/OVM (ppm)
1050	3	500	11.0	16	3.6	-0.9	7.8	252	18	0.2
1056	6	300	11.3	17	3.6	0.6	7.9	257	20	0.2
1102	8	300	11.5	17	3.6	0.8	7.9	259	21	0.2
1108	10	300	12.0	18	3.6	0.9	7.9	254	19	0.2

After sampling and, if accessible, depth to bottom: ~~[illegible]~~ ? ft. below TOC

Purged Dry? NO

Field Measurement Equipment Used

Equipment	Model	Serial Number	Equipment	Model	Serial Number
Water Quality Meter	Horiba	305005	PID	Mini Rae	408574
Turbidimeter			Filter Apparatus		
Water Level Meter	Solinst	25570	Other ___		
Pump	Equipco	2" pump 68	Other ___		

Groundwater Samples Collected (check all that apply)

Analytes of Concern

Off-Site Lab

Metals			
PCBs			
Pesticides			
SVOCs		~~[illegible]~~ SEC	3/31/04
TPH-e			
TPH-p			
VOCs	X		

Fate and Transport Data

Off-Site Lab

Chloride		
Alkalinity		
Ethane	~~[illegible]~~ SEC	3/31/04
Ethene		
Hydrogen		
TDS		
TSS		

Field Test Kit Analyses

	Unfiltered	Filtered
Fe^{2+} (mg/L)		
Mn^{2+} (mg/L)	~~[illegible]~~ SEC	3/31/04

Filter where turbidity > 50 NTU

Downhole Dissolved Oxygen

Top (mg/L)	
Middle (mg/L)	
Bottom (mg/L)	

Sample Number: ~~IR10EB010~~ PH 0414 HPNS Sample Date/Time: 3/30/04 1120

QA/QC Sample(s)? ☐ None ☐ Field Dup ☒ Rinsat ☐ MS/MSD

Dup. Sample Time 1145 Dup. Sample Number IR10EB010

Sample Depth (ft. below TOC): 14

Reviewed by: S. Callahan

Date: 3/31/04

Method of Extraction:
- ☒ Submersible Pump
- ☐ Peristaltic Pump
- ☐ Disposable Bailer

Method of Sampling:
- ☒ Submersible Pump
- ☐ Peristaltic Pump
- ☐ Disposable Bailer

KLEINFELDER

MONITORING WELL SAMPLING SHEET

Well No.: IR10MW6P

Sheet 1 of 1

Personnel: B. Metcalfe / D. NGUYEN

Day: Tuesday

Date: 3/23/04

Casing Volume = 10.8 Gallons

Initial depth to water: 6.87 ft. below top of casing

[casing volume = water column height (ft) x 0.03 gal/ft (0.75-inch well) or 0.163 gal/ft (2-inch well) or 0.652 gal/ft (4-inch well)]

Organic Vapor Concentrations

Top of Casing: 0.1 ppm Background: 0.1 ppm

Groundwater Parameters

3/23 PM Time	Cumulative Volume Purged (L)	Discharge Rate (mL/min)	Depth to water (ft. below TOC)	Temperature (°C)	Specific Conductivity (mS/cm)	Dissolved Oxygen (mg/L)	pH	ORP (mv)	Turbidity (NTU)	SALINITY ~~PID/OVM~~ (ppm)
14:41	4	2170	6.94	17.8	1.86	0.09	7.14	81	-1	0.08
14:45	≈13	2200	6.94	18.0	1.86	0.03	7.28	58	-9	0.08
14:51	≈22.5	2250	6.94	17.9	1.82	0.01	7.29	10	-10	0.08
14:58	39	2350	6.94	17.9	1.82	0.04	7.33	-46	-10	0.08
15:06			6.91							

After sampling and, if accessible, depth to bottom: 23.4 ft. below TOC

Purged Dry? N

Field Measurement Equipment Used

Equipment	Model	Serial Number	Equipment	Model	Serial Number
Water Quality Meter	ACRIBALL-10	305006	PID	MINI RAE	104541
Turbidimeter			Filter Apparatus		
Water Level Meter			Other ORP	ONICTON	35650-02
Pump	GRUNDS	02082264	Other		

Groundwater Samples Collected (check all that apply)

Analytes of Concern	Off-Site Lab			Fate and Transport Data	Off-Site Lab	Field Test Kit Analyses	Unfiltered	Filtered
Metals				Chloride		Fe^{2+} (mg/L)		
PCBs				Alkalinity		Mn^{2+} (mg/L)		
Pesticides				Ethane		Filter where turbidity > 50 NTU		
SVOCs				Ethene		Downhole Dissolved Oxygen		
TPH-e				Hydrogen		Top (mg/L)		
TPH-p				TDS		Middle (mg/L)		
VOCs	X			TSS		Bottom (mg/L)		

Sample Number: 0413M0045 TE 3/25/04

Sample Date/Time: 3/23/04 15:03

QA/QC Sample(s)? [X] None [ ] Field Dup [ ] MS/MSD

Dup. Sample Time _____ Dup. Sample Number _____

Sample Depth (ft. below TOC): ≈17 FT

Reviewed by: S. Callahan

Date: 3/31/04

Method of Extraction:
- [X] Submersible Pump
- [ ] Peristaltic Pump
- [ ] Disposable Bailer

Method of Sampling:
- [X] Submersible Pump
- [ ] Peristaltic Pump
- [ ] Disposable Bailer

TB = IR10TB002

KLEINFELDER

MONITORING WELL SAMPLING SHEET

Well No.: 1R10MW62A

Sheet ___ of ___

Personnel: Peter H & Latoya S

Day: tuesday

Date: 3-23-04

Casing Volume = Gallons

Initial depth to water: 6.36 ft. below top of casing

[casing volume = water column height (ft) x 0.03 gal/ft (0.75-inch well) or 0.163 gal/ft (2-inch well) or 0.652 gal/ft (4-inch well)]

Organic Vapor Concentrations

Top of Casing: 0.1 ppm Background: 0.1 ppm

Groundwater Parameters

Time	Approx Cumulative Volume Purged (L)	Approx Discharge Rate (mL/min)	Depth to water (ft. below TOC)	Temperature (°C)	Specific Conductivity (mS/cm)	Dissolved Oxygen (mg/L)	pH	ORP (mv)	Turbidity (NTU)	Sal PID/OVM (ppm)
1440	5	200	6.80	19	6.9	4.6	7.6	96	27	0.4
1447	~8	~500	6.98	20	12	4.1	7.4	69	27	0.7
1450	10	~700	7.08	20	12	4.1	7.4	95	27	0.7
1452	13	~700	7.12	20	13	4.3	7.3	90	27	0.7
1457	20	~700		20	12	4.4	7.4	101	27	0.7

After sampling and, if accessible, depth to bottom: ___ ft. below TOC Purged Dry? ___

Field Measurement Equipment Used

Equipment	Model	Serial Number	Equipment	Model	Serial Number
Water Quality Meter			PID	Min Ray	104517
Turbidimeter			Filter Apparatus		
Water Level Meter	solinst	235771	Other ORP		4
Pump			Other Horiba		305005

Groundwater Samples Collected (check all that apply)

Analytes of Concern	Off-Site Lab			Fate and Transport Data	Off-Site Lab	Field Test Kit Analyses	Unfiltered	Filtered
Metals				Chloride		Fe^{2+} (mg/L)		
PCBs				Alkalinity		Mn^{2+} (mg/L)		
Pesticides				Ethane		Filter where turbidity > 50 NTU		
SVOCs				Ethene		Downhole Dissolved Oxygen		
TPH-e				Hydrogen		Top (mg/L)		
TPH-p				TDS		Middle (mg/L)		
VOCs	X			TSS		Bottom (mg/L)		

Sample Number: 0413H004

Sample Date/Time: 3-23-04 / 1505

QA/QC Sample(s)? [X] None [ ] Field Dup [ ] MS/MSD

Dup. Sample Time ___ Dup. Sample Number ___

Sample Depth (ft. below TOC): ___

Reviewed by: S. Gallahan

Date: 3/31/04

Method of Extraction:
- [X] Submersible Pump
- [ ] Peristaltic Pump
- [ ] Disposable Bailer

Method of Sampling:
- [X] Submersible Pump
- [ ] Peristaltic Pump
- [ ] Disposable Bailer

KLEINFELDER

MONITORING WELL SAMPLING SHEET

Well No.: IR10MW71A

Sheet ___ of ___

Personnel: _____

Day: Thursday

Date: 3-25-04

Casing Volume = Gallons

Initial depth to water: 10.66 ft. below top of casing

(casing volume = water column height (ft) x 0.03 gal/ft (0.75-inch well) or 0.163 gal/ft (2-inch well) or 0.652 gal/ft (4-inch well))

Organic Vapor Concentrations

Top of Casing: 31.6 ppm Background: 0.1 ppm

Groundwater Parameters

Time	Cumulative Volume Purged (L)	Discharge Rate (mL/min)	Depth to water (ft. below TOC)	Temperature (°C)	Specific Conductivity (mS/cm)	Dissolved Oxygen (mg/L)	pH	ORP (mv)	Turbidity (NTU)	PID/OVM (ppm)
1614										

Well not sampled on 3-25-04

After sampling and, if accessible, depth to bottom: ____ ft. below TOC Purged Dry? ____

Field Measurement Equipment Used

Equipment	Model	Serial Number	Equipment	Model	Serial Number
Water Quality Meter			PID		
Turbidimeter			Filter Apparatus		
Water Level Meter			Other _____		
Pump			Other _____		

Groundwater Samples Collected (check all that apply)

Analytes of Concern				Fate and Transport Data			
Off-Site Lab				*Off-Site Lab*		*Field Test Kit Analyses*	
						Unfiltered	Filtered
Metals				Chloride		Fe^{2+} (mg/L)	
PCBs				Alkalinity		Mn^{2+} (mg/L)	
Pesticides				Ethane		Filter where turbidity > 50 NTU	
SVOCs				Ethene		*Downhole Dissolved Oxygen*	
TPH-e				Hydrogen		Top (mg/L)	
TPH-p				TDS		Middle (mg/L)	
VOCs				TSS		Bottom (mg/L)	

Sample Number: _____ Sample Date/Time: _____

QA/QC Sample(s)? ☐ None ☐ Field Dup ☐ MS/MSD

Dup. Sample Time _____ Dup. Sample Number _____

Sample Depth (ft. below TOC): _____

Reviewed by: _____

Date: _____

Method of Extraction:
- ☐ Submersible Pump
- ☐ Peristaltic Pump
- ☐ Disposable Bailer

Method of Sampling:
- ☐ Submersible Pump
- ☐ Peristaltic Pump
- ☐ Disposable Bail

KLEINFELDER

MONITORING WELL SAMPLING SHEET

Well No.: IR10MW71A

Sheet ___ of ___

Personnel: Levi Chavez, Susie Titus

Day: Friday

Date: 3-26-04

Casing Volume = Gallons

Initial depth to water: 11.43 ft. below top of casing

[casing volume = water column height (ft) x 0.03 gal/ft (0.75-inch well) or 0.163 gal/ft (2-inch well) or 0.652 gal/ft (4-inch well)]

Organic Vapor Concentrations

Top of Casing: 3.7 ppm Background: 0.1 ppm

Groundwater Parameters

Time	Cumulative Volume Purged (L)	Discharge Rate (mL/min)	Depth to water (ft. below TOC)	Temperature (°C)	Specific Conductivity (mS/cm)	Dissolved Oxygen (mg/L)	pH	ORP (mv)	Turbidity (NTU)	PID/OVM (ppm)	Sal
1050	1	79	10.76	18	2.3	0.8	7.9	92	256	0.1	0.1
1053	2	79	10.75	19	2.3	0.6	7.9	101	256	0.1	0.1
1056	3	79	10.75	19	2.3	0.6	7.9	107	256	0.1	0.1
1059	4	79	10.76	19	2.3	0.5	7.9	108	256	0.1	0.1

After sampling and, if accessible, depth to bottom: 23.44 ft. below TOC

Purged Dry? NO

Field Measurement Equipment Used

Equipment	Model	Serial Number	Equipment	Model	Serial Number
Water Quality Meter	Horiba U10	301010	PID	MiniRae	104512
Turbidimeter			Filter Apparatus		
Water Level Meter	Solinst	23571	Other _____		
Pump	Grundfos	1A106003	Other _____		

Groundwater Samples Collected (check all that apply)

Analytes of Concern				Fate and Transport Data			
Off-Site Lab				*Off-Site Lab*		*Field Test Kit Analyses*	
Metals				Chloride			Unfiltered / Filtered
PCBs				Alkalinity		Fe^{2+} (mg/L)	
Pesticides				Ethane		Mn^{2+} (mg/L)	
SVOCs				Ethene		Filter where turbidity > 50 NTU	
TPH-e				Hydrogen		*Downhole Dissolved Oxygen*	
TPH-p				TDS		Top (mg/L)	
VOCs	X			TSS		Middle (mg/L)	
						Bottom (mg/L)	

Sample Number: 0413T001 / IR10EB001, 1129 Sample Date/Time: 3-26-04 1109

QA/QC Sample(s)? [X] None [ ] Field Dup [ ] MS/MSD

Dup. Sample Time _____ Dup. Sample Number _____

Sample Depth (ft. below TOC): _____

Reviewed by: S. Callahan

Date: 3/31/04

Method of Extraction:
- [X] Submersible Pump
- [ ] Peristaltic Pump
- [ ] Disposable Bailer

Method of Sampling:
- [X] Submersible Pump
- [ ] Peristaltic Pump
- [ ] Disposable Bailer

KLEINFELDER

MONITORING WELL SAMPLING SHEET

Well No.: IR10 MW76A

Sheet 1 of ___

Personnel: Pedell, Lafanya S.

Day: Tuesday

Date: 3/30/04

Casing Volume = PH Gallons

Initial depth to water: 10.30 ft. below top of casing

[casing volume = water column height (ft) x 0.03 gal/ft (0.75-inch well) or 0.163 gal/ft (2-inch well) or 0.652 gal/ft (4-inch well)]

Organic Vapor Concentrations

Top of Casing: 0.1 ppm Background: 0.1 ppm

Groundwater Parameters

Time	Approx Cumulative Volume Purged (L)	Approx Discharge Rate (mL/min)	Depth to water (ft. below TOC)	Temperature (°C)	Specific Conductivity (mS/cm)	Dissolved Oxygen (mg/L)	pH	ORP (mv)	Turbidity (NTU)	Sal ~~PID/OVM~~ (ppm)
1310	3	200	10.6	15	2.3	2.2	7.8	383	-1	0.1
1316	4.5	250	10.7	16	2.3	3.1	7.8	377	0	0.1
1322	6	250	11.2	18	2.2	3.6	7.8	362	-1	0.1
1328	8	250	11.5	18	2.2	3.2	7.8	355	-1	0.1
1332	9	11	11.5	18	2.2	3.4	7.8	356	-1	0.1

After sampling and, if accessible, depth to bottom: ___ ft. below TOC Purged Dry? N

Field Measurement Equipment Used

Equipment	Model	Serial Number	Equipment	Model	Serial Number
Water Quality Meter	Horiba	305005	PID	Minirae	104577
Turbidimeter			Filter Apparatus		
Water Level Meter	Solinst	25870	Other ___		
Pump	Equipco	2" Pump 68	Other ___		

Groundwater Samples Collected (check all that apply)

Analytes of Concern (Off-Site Lab)				Fate and Transport Data (Off-Site Lab)		Field Test Kit Analyses	Unfiltered	Filtered
Metals				Chloride		Fe^{2+} (mg/L)		
PCBs				Alkalinity		Mn^{2+} (mg/L)		
Pesticides				Ethane		Filter where turbidity > 50 NTU		
SVOCs				Ethene		Downhole Dissolved Oxygen		
TPH-e				Hydrogen		Top (mg/L)		
TPH-p				TDS		Middle (mg/L)		
VOCs	X			TSS		Bottom (mg/L)		

Sample Number: 0414H017

Sample Date/Time: 1340 - 3/30/04

QA/QC Sample(s)? [X] None [ ] Field Dup [ ] MS/MSD

Dup. Sample Time ___ Dup. Sample Number ___

Sample Depth (ft. below TOC): ___

Reviewed by: S. Callahan

Date: 3/31/04

Method of Extraction:
- [X] Submersible Pump
- [ ] Peristaltic Pump
- [ ] Disposable Bailer

Method of Sampling:
- [X] Submersible Pump
- [ ] Peristaltic Pump
- [ ] Disposable Bailer

KLEINFELDER

MONITORING WELL SAMPLING SHEET

Well No.: ~~#~~ 1R10MW79A

Sheet 1 of ___

Personnel: Pete H. Catanya

Day: Thursday

Date: 3/25/04

Casing Volume = Gallons

Initial depth to water: 6.18 ft. below top of casing

[casing volume = water column height (ft) x 0.03 gal/ft (0.75-inch well) or 0.163 gal/ft (2-inch well) or 0.652 gal/ft (4-inch well)]

Organic Vapor Concentrations

Top of Casing: Ø ppm Background: Ø ppm

Groundwater Parameters

Time	Cumulative Volume Purged (L)	Discharge Rate (mL/min)	Depth to water (ft. below TOC)	Temperature (°C)	Specific Conductivity (mS/cm)	Dissolved Oxygen (mg/L)	pH	ORP (mv)	Turbidity (NTU)	Sal ~~PID/OVM~~ (ppm)
1415	3	500	6.20	18	1.0	0.4	7.3	298	30	0
1420	6	1000	6.25	19	1.0	0.3	7.3	304	25	0
1425	10	"	[illegible]	19	1.0	0.2	7.3	308	25	0
1430	15	"	6.28	19	1.0	0.2	7.3	312	25	0

After sampling and, if accessible, depth to bottom: 15 ft. below TOC

Purged Dry? N

Field Measurement Equipment Used

Equipment	Model	Serial Number	Equipment	Model	Serial Number
Water Quality Meter	Horiba	305005	PID	MiniRae	104517
Turbidimeter			Filter Apparatus		
Water Level Meter	Solinist	25570	Other ___		
Pump	Equipco	2" pump 68	Other ___		

Groundwater Samples Collected (check all that apply)

Analytes of Concern — *Off-Site Lab*

Metals			
PCBs			
Pesticides			
SVOCs			
TPH-e			
TPH-p			
VOCs	X		

Fate and Transport Data — *Off-Site Lab*

Chloride	
Alkalinity	
Ethane	
Ethene	
Hydrogen	
TDS	
TSS	

Field Test Kit Analyses

	Unfiltered	Filtered
Fe^{2+} (mg/L)		
Mn^{2+} (mg/L)		

Filter where turbidity > 50 NTU

Downhole Dissolved Oxygen

Top (mg/L)	
Middle (mg/L)	
Bottom (mg/L)	

Sample Number: ~~0413008~~ 0413H008

Sample Date/Time: 3/25/04

QA/QC Sample(s)? ~~X~~ None [ ] Field Dup [X] Dissolved [ ] MS/MSD

Dup. Sample Time 1500 Dup. Sample Number ~~0413~~ 1R10EB003

Sample Depth (ft. below TOC): ___

Reviewed by: S. Callahan

Date: 3/31/04

Method of Extraction:

- [X] Submersible Pump
- [ ] Peristaltic Pump
- [ ] Disposable Bailer

Method of Sampling:

- [X] Submersible Pump
- [ ] Peristaltic Pump
- [ ] Disposable Bailer

KLEINFELDER

MONITORING WELL SAMPLING SHEET

Well No.: TRIUMW80A

Sheet 1 of 1

Personnel: S. Titus, L. Chavez

Day: Tuesday

Date: 3-30-04

Casing Volume = Gallons

Initial depth to water: 5.86 ft. below top of casing

[casing volume = water column height (ft) x 0.03 gal/ft (0.75-inch well) or 0.163 gal/ft (2-inch well) or 0.652 gal/ft (4-inch well)]

Organic Vapor Concentrations

Top of Casing: 0.1 ppm Background: 0.1 ppm

Groundwater Parameters

Time	Cumulative Volume Purged (L)	Discharge Rate (mL/min)	Depth to water (ft. below TOC)	Temperature (°C)	Specific Conductivity (mS/cm)	Dissolved Oxygen (mg/L)	pH	ORP (mv)	Turbidity (NTU)	PID/OVM (ppm)	Sal %
1332			5.76								
1334	~1	~500	6.11	19	0.73	1.2	8.2	145	10	0.1	0.0
1336	~2	~500	6.15	20	0.72	1.0	8.2	167	10	0.1	0.0
1338	~3	~500	6.16	20	0.72	1.0	8.2	174	10	0.1	0.0
1340	~4	~500	6.16	21	0.71	1.0	8.2	188	10	0.1	0.0
1342	~5	~500	6.15	21	0.71	1.0	8.2	190	10	0.1	0.0
1344	~6	~500	6.13	21	0.72	1.0	8.2	196	10	0.1	0.0

After sampling and, if accessible, depth to bottom: 19.88 ft. below TOC

Purged Dry? NO

Field Measurement Equipment Used

Equipment	Model	Serial Number	Equipment	Model	Serial Number
Water Quality Meter	Horiba U10	306007	PID	MiniRae	104512
Turbidimeter	"	"	Filter Apparatus		
Water Level Meter	Solinst	23998	Other		
Pump	Grundfos	01351430	Other		

Groundwater Samples Collected (check all that apply)

Analytes of Concern				Fate and Transport Data			
Off-Site Lab				*Off-Site Lab*		*Field Test Kit Analyses*	
Metals				Chloride			Unfiltered / Filtered
PCBs				Alkalinity		Fe^{2+} (mg/L)	
Pesticides				Ethane		Mn^{2+} (mg/L)	
SVOCs				Ethene		Filter where turbidity > 50 NTU	
TPH-e				Hydrogen		*Downhole Dissolved Oxygen*	
TPH-p				TDS		Top (mg/L)	
VOCs	X			TSS		Middle (mg/L)	
						Bottom (mg/L)	

Sample Number: 0414T007

Sample Date/Time: 3-30-04 @ 1349

QA/QC Sample(s)? ☐ None ☒ Field Dup ☐ MS/MSD

Dup. Sample Time 1352 Dup. Sample Number 0414T008

Sample Depth (ft. below TOC): 12.87

Reviewed by: S. Callahan

Date: 3/31/04

Method of Extraction:
- ☒ Submersible Pump
- ☐ Peristaltic Pump
- ☐ Disposable Bailer

Method of Sampling:
- ☒ Submersible Pump
- ☐ Peristaltic Pump
- ☐ Disposable Bailer

KLEINFELDER

MONITORING WELL SAMPLING SHEET

Well No.: TRIBMW21A

Sheet 1 of 1

Personnel: B. Metcalfe / P. NGUYEN

Day: THURS

Date: 3/25/04

Casing Volume = 3.3 Gallons

Initial depth to water: 13.77 ft. below top of casing

[casing volume = water column height (ft) x 0.03 gal/ft (0.75-inch well) or 0.163 gal/ft (2-inch well) or 0.652 gal/ft (4-inch well)]

Organic Vapor Concentrations
Top of Casing: 0.6 ppm Background: 0.0 ppm

Groundwater Parameters

Time	Cumulative Volume Purged (L)	Discharge Rate (mL/min)	Depth to water (ft. below TOC)	Temperature (°C)	Specific Conductivity (mS/cm)	Dissolved Oxygen (mg/L)	pH	ORP (mv)	Turbidity (NTU)	PID/OVM (ppm)
8:49	1.8	450	13.88	18.0	1.47	0.52	6.45	-82 (1)	249	0.06
8:58	5.8	450	13.86	20.9	1.48	-0.38	6.46	-98 (1)	235	0.06
9:04	6.6	1.25 (2)	13.84	21.4	1.49	-0.44	6.46	-14 (1)	218	0.06
9:13	28.8	3200 (3)	14.41	16.8	1.49	-0.53	6.47	-93 (1)	229	0.06
9:18	36.3	300	13.98	17.8	1.47	-0.32	6.47	-98 (1)	231	0.06
9:32		(4)	14.30							

After sampling and, if accessible, depth to bottom: 18.83 ft. below TOC Purged Dry? N

Field Measurement Equipment Used

Equipment	Model	Serial Number	Equipment	Model	Serial Number
Water Quality Meter	HORIBA U10	305006	PID	MINIRAE	104541
Turbidimeter			Filter Apparatus		
Water Level Meter	SOLINST	23983	Other ORP	OAKTON	~~104541~~ 35650-02
Pump	GRUNDFOS	02062264	Other		RM 3/25/04

Groundwater Samples Collected (check all that apply)

Analytes of Concern (Off-Site Lab)				Fate and Transport Data (Off-Site Lab)	
Metals	X			Chloride	
PCBs	X			Alkalinity	
Pesticides	X			Ethane	
SVOCs	X			Ethene	
TPH-e	X			Hydrogen	
TPH-p	X			TDS	
VOCs	X			TSS	X
		Hex Chrom	X		

Field Test Kit Analyses	Unfiltered	Filtered
Fe^{2+} (mg/L)		
Mn^{2+} (mg/L)		

Filter where turbidity > 50 NTU

Downhole Dissolved Oxygen	
Top (mg/L)	
Middle (mg/L)	
Bottom (mg/L)	

Sample Number: 0413M009

Sample Date/Time: 3/25/04 9:20

QA/QC Sample(s)? [X] None [ ] Field Dup [ ] MS/MSD

Dup. Sample Time / Dup. Sample Number

Sample Depth (ft. below TOC): 17

Reviewed by: S. Callahan

Date: 3/31/04

Method of Extraction:
- [X] Submersible Pump
- [X] Peristaltic Pump
- [ ] Disposable Bailer

Method of Sampling:
- [X] Submersible Pump
- [ ] Peristaltic Pump
- [ ] Disposable Bailer

KLEINFELDER

MONITORING WELL SAMPLING SHEET

Well No.: TR25MW17A

Sheet ___ of ___

Personnel: Pete H. Latanya S.

Day: Monday

Date: 3/29/04

Casing Volume = Gallons

Initial depth to water: 7.55 ft. below top of casing

[casing volume = water column height (ft) x 0.03 gal/ft (0.75-inch well) or 0.163 gal/ft (2-inch well) or 0.652 gal/ft (4-inch well)]

Organic Vapor Concentrations

Top of Casing: 0.1 ppm Background: 0.1 ppm

Groundwater Parameters

Time	Approx Cumulative Volume Purged (L)	Approx Discharge Rate (mL/min)	Depth to water (ft. below TOC)	Temperature (°C)	Specific Conductivity (mS/cm)	Dissolved Oxygen (mg/L)	pH	ORP (mv)	Turbidity (NTU)	Sal ~~PID/OVM~~ (ppm)
0840	3	500	7.5	19	6.4	2.1	6.8	276	25	0.3
0845	6	"	7.5	19	6.0	2.6	6.8	276	25	0.3
0850	11	1000	9	20	5.7	3.1	6.9	278	25	0.3
0853	13	500	10	19	5.6	3.9	6.9	278	25	0.3
0858	16	500	10	20	5.7	3.8	6.9	260	24	0.3

After sampling and, if accessible, depth to bottom: ~15 ft. below TOC

Purged Dry? N

Field Measurement Equipment Used

Equipment	Model	Serial Number	Equipment	Model	Serial Number
Water Quality Meter	Horiba	305005	PID	MiniRae	104517
Turbidimeter			Filter Apparatus		
Water Level Meter	Solinst	25570	Other ___		
Pump	Equipo	2" pump 68	Other ___		

Groundwater Samples Collected (check all that apply)

Analytes of Concern

Off-Site Lab

Metals	X		
PCBs			
Pesticides			
SVOCs			
TPH-e	X		
TPH-p	X		
VOCs	X		
		Hex Chrom	X

SEC 3/31/04

Fate and Transport Data

Off-Site Lab

Chloride	
Alkalinity	
Ethane	
Ethene	
Hydrogen	
TDS	
TSS	X

SEC 3/31/04

Field Test Kit Analyses

	Unfiltered	Filtered
Fe^{2+} (mg/L)		
Mn^{2+} (mg/L)		

Filter where turbidity > 50 NTU

Downhole Dissolved Oxygen

Top (mg/L)	
Middle (mg/L)	
Bottom (mg/L)	

SEC 3/31/04

Sample Number: 0414H009

Sample Date/Time: 3/29/04 0915

QA/QC Sample(s)? [X] None [ ] Field Dup [ ] MS/MSD

Dup. Sample Time ___ Dup. Sample Number ___

Sample Depth (ft. below TOC): ~15

Reviewed by: S. Callahan

Date: 3/31/04

Method of Extraction:

[X] Submersible Pump
[ ] Peristaltic Pump
[ ] Disposable Bailer

Method of Sampling:

[X] Submersible Pump
[ ] Peristaltic Pump
[ ] Disposable Bailer

KLEINFELDER

MONITORING WELL SAMPLING SHEET

Bm 3/30/04

Sheet 1 of ___

Well No.: IR25MW37A

Personnel: B. Petrarca, P. Holland

Day: Tuesday

Date: 3-30-04

Casing Volume = 6.4 Gallons

Initial depth to water: 5.85 ft. below top of casing

[casing volume = water column height (ft) x 0.03 gal/ft (0.75-inch well) or 0.163 gal/ft (2-inch well) or 0.652 gal/ft (4-inch well)]

Organic Vapor Concentrations

Top of Casing 0.9 ppm Background 0.1 ppm

Groundwater Parameters

Time	Cumulative Volume Purged (L)	Discharge Rate (mL/min)	Depth to water (ft. below TOC)	Temperature (°C)	Specific Conductivity (mS/cm)	Dissolved Oxygen (mg/L)	pH	ORP (mv)	Turbidity (NTU)	~~PID/OVM~~ Salinity (ppm) Bm 3/30/04
1458	3.0	1500	6.81	18.2	.212	4.13	6.83	186	56	0.0
1500	4.6	800	6.60	19.0	.214	4.16	6.84	189	30	0.0
1503	6.7.0	800	6.68	19.2	.217	4.23	6.86	191	13	0.0
1505	Bm 3/30/04 8.4	700	6.72	19.5	.222	4.23	6.88	192	4	0.0
1508	10.5	700	6.76	19.7	.232	4.23	6.89	194	9	0.0
1510	12.3	900	6.77	19.8	.239	4.28	6.90	193	0	0.0
1513	15.0	900	6.81	19.7	.246	4.29	6.91	191	-10	0.0
1516	17.1	700		19.8	.249	4.19	6.91	196	-10	0.0

After sampling and, if accessible, depth to bottom: 15.8 ft. below TOC Purged Dry? N

Field Measurement Equipment Used

Equipment	Model	Serial Number	Equipment	Model	Serial Number
Water Quality Meter	Horiba-U10	305006	PID	MinRae	104541
Turbidimeter			Filter Apparatus		
Water Level Meter	Solinst	28398	Other ORP	ORLITON	3650-02
Pump	Grundfos	02082264	Other		

Groundwater Samples Collected (check all that apply)

Analytes of Concern (Off-Site Lab)				Fate and Transport Data (Off-Site Lab)	
Metals				Chloride	
PCBs				Alkalinity	
Pesticides				Ethane	
SVOCs				Ethene	
TPH-e				Hydrogen	
TPH-p				TDS	
VOCs	X			TSS	

Field Test Kit Analyses	Unfiltered	Filtered
Fe^{2+} (mg/L)		
Mn^{2+} (mg/L)		

Filter where turbidity > 50 NTU

Downhole Dissolved Oxygen	
Top (mg/L)	
Middle (mg/L)	
Bottom (mg/L)	

Sample Number: 0414M018

Sample Date/Time: 3/30/04 1517

QA/QC Sample(s)? [X] None [ ] Field Dup [ ] MS/MSD

Dup. Sample Time _____ Dup. Sample Number _____

Sample Depth (ft. below TOC): 2 11

Reviewed by: S. Callahan

Date: 3/31/04

Method of Extraction: [X] Submersible Pump [ ] Peristaltic Pump [ ] Disposable Bailer

Method of Sampling: [X] Submersible Pump [ ] Peristaltic Pump [ ] Disposable Bailer

KLEINFELDER

MONITORING WELL SAMPLING SHEET

Well No.: IM26MWALA

Sheet 1 of ___

Personnel: B. Metcalfe, D. NGuyen.

Day: Mon.

Date: 3/29/04

Casing Volume = 9.62 Gallons

Initial depth to water: 5.97 ft. below top of casing

[casing volume = water column height (ft) x 0.03 gal/ft (0.75-inch well) or 0.163 gal/ft (2-inch well) or 0.652 gal/ft (4-inch well)]

Organic Vapor Concentrations

Top of Casing: 4.7 ppm Background: 0.1 ppm

Groundwater Parameters

Time	Cumulative Volume Purged (L)	Discharge Rate (mL/min)	Depth to water (ft. below TOC)	Temperature (°C)	Specific Conductivity (mS/cm)	Dissolved Oxygen (mg/L)	pH	ORP (mv)	Turbidity (NTU)	~~PID/OVM~~ SALINITY (ppm) BW 3/29/04
1102	0.7	700	6.29	18.6	2.21	0.20	6.60	96	255	0.10
BW 3/29/04 1106	3.5	700	6.38	20.2	2.05	0.09	6.63	92	253	0.09
1110	6.3	700	6.41	20.9	1.74	0.06	6.75	94	241	0.08
1114	9.1	700	6.42	21.1	1.41	0.05	6.86	103	233	0.06
1117	11.9	700	6.42	21.1	1.21	0.04	6.90	110	234	0.05
1120	14.0	700	6.45	21.1	1.13	0.03	6.92	113	237	0.05
1125	17.5	700	6.46	20.7	1.60	0.02	6.70		244	0.07
1132	22.4	700	6.45	21.5	1.19	0.03	6.91	119	243	0.05
1136	25.2	700	6.46	21.4	1.07	0.02	6.93		248	0.04
1148			~~7.47~~ 1							

After sampling and, if accessible, depth to bottom: 20.72 ft. below TOC

Purged Dry? N

Field Measurement Equipment Used

Equipment	Model	Serial Number	Equipment	Model	Serial Number
Water Quality Meter	HORIBA U-10	305006	PID	MINIRAE	104541
Turbidimeter			Filter Apparatus		
Water Level Meter	Solinst	23998	Other ORP	OAKTON	35650-02
Pump	Grundfos	02082264	Other		

Groundwater Samples Collected (check all that apply)

Analytes of Concern				Fate and Transport Data		Field Test Kit Analyses	Unfiltered	Filtered
Off-Site Lab				*Off-Site Lab*				
Metals	X			Chloride		Fe^{2+} (mg/L)		
PCBs				Alkalinity		Mn^{2+} (mg/L)		
Pesticides				Ethane		Filter where turbidity > 50 NTU		
SVOCs				Ethene		*Downhole Dissolved Oxygen*		
TPH-e	X			Hydrogen		Top (mg/L)		
TPH-p	X			TDS		Middle (mg/L)		
VOCs	X			TSS	X	Bottom (mg/L)		
		Hex Chrom	X					

Sample Number: 0414M013

Sample Date/Time: 3/29/04 1138

QA/QC Sample(s)? ☐ None ☒ Field Dup ☐ MS/MSD

Dup. Sample Time 1143 Dup. Sample Number 0414M014

Sample Depth (ft. below TOC): 14'

Reviewed by: S. Callahan

Date: 3/31/04

Method of Extraction:
- [X] Submersible Pump
- [ ] Peristaltic Pump
- [ ] Disposable Bailer

Method of Sampling:
- [X] Submersible Pump
- [ ] Peristaltic Pump
- [ ] Disposable Bailer

KLEINFELDER

MONITORING WELL SAMPLING SHEET

Well No.: IR26MW46A

Sheet 1 of ___

Personnel: Pete H. Tanya S.

Day: Monday

Date: 3/29/04

Casing Volume = Gallons

Initial depth to water: 6.50 ft. below top of casing

[casing volume = water column height (ft) x 0.03 gal/ft (0.75-inch well) or 0.163 gal/ft (2-inch well) or 0.652 gal/ft (4-inch well)]

Organic Vapor Concentrations

Top of Casing: Ø ppm Background: Ø ppm

Groundwater Parameters

Time	Approx Cumulative Volume Purged (L)	Approx Discharge Rate (mL/min)	Depth to water (ft. below TOC)	Temperature (°C)	Specific Conductivity (mS/cm)	Dissolved Oxygen (mg/L)	pH	ORP (mv)	Turbidity (NTU)	Sal ~~PID/OVM~~ (ppm)
1000	5	500.	6.5	19	5.6	-0.1	7.1	-19	26	0.3
1005	7	300	8	19	5.6	1.9	7.0	-30	25	0.3
1010	10	250	8.6	20	5.6	0.3	7.1	-33	24	0.3
1015	11	"	9	20	5.5	1.2	7.0	-37	20	0.3
1020	12	400	9	21	5.5	1.2	7.0	-35	22	0.3
1024	14	350	9.5	21	5.5	1.2	7.0	-36	22	0.3

After sampling and, if accessible, depth to bottom: uncertain ft. below TOC

Purged Dry? N

Field Measurement Equipment Used

Equipment	Model	Serial Number	Equipment	Model	Serial Number
Water Quality Meter	Ronba	315005	PID	MiniRac	1045/17
Turbidimeter			Filter Apparatus		
Water Level Meter	Solinst	25570	Other		
Pump	Equipco	3" pump 68	Other		

Groundwater Samples Collected (check all that apply)

Analytes of Concern

Off-Site Lab

Metals	X		
PCBs	X		
Pesticides	X		
SVOCs	X		
TPH-e			
TPH-p			
VOCs			
		Hex Chrom	X

Fate and Transport Data

Off-Site Lab

Chloride	
Alkalinity	
Ethane	
Ethene	
Hydrogen	
TDS	
TSS	

Field Test Kit Analyses

	Unfiltered	Filtered
Fe^{2+} (mg/L)		
Mn^{2+} (mg/L)		

Filter where turbidity > 50 NTU

Downhole Dissolved Oxygen

Top (mg/L)	
Middle (mg/L)	
Bottom (mg/L)	

Sample Number: 0414H011

Sample Date/Time: 3/29/04 1030

QA/QC Sample(s)? ☐ None ☒ Field Dup ☐ MS/MSD

Dup. Sample Time 1045 Dup. Sample Number 0414H012

Sample Depth (ft. below TOC): ~16

Reviewed by: S. Callahan

Date: 3/31/04

Method of Extraction:
- ☒ Submersible Pump
- ☐ Peristaltic Pump
- ☐ Disposable Bailer

Method of Sampling:
- ☒ Submersible Pump
- ☐ Peristaltic Pump
- ☐ Disposable Bailer

KLEINFELDER

MONITORING WELL SAMPLING SHEET

Well No.: IR26 MW47A

Sheet 1 of 1

Personnel: S. Titus / L. Chavez

Day: Monday

Date: 3-29-04

Casing Volume = Gallons

Initial depth to water: 7.67 ft. below top of casing

[casing volume = water column height (ft) x 0.03 gal/ft (0.75-inch well) or 0.163 gal/ft (2-inch well) or 0.652 gal/ft (4-inch well)]

Organic Vapor Concentrations
Top of Casing: 0.1 ppm Background: 0.1 ppm

Groundwater Parameters

Time	Cumulative Volume Purged (L)	Discharge Rate (mL/min)	Depth to water (ft. below TOC)	Temperature (°C)	Specific Conductivity (mS/cm)	Dissolved Oxygen (mg/L)	pH	ORP (mv)	Turbidity (NTU)	PID/OVM (ppm)	Sal %
1107	0		7.86	18°							
1110	1	~500	7.90	~~7.85~~ 22.04	34	4.0	7.0	139	30	0.1	2.2
1112	2	~500	7.91	19	34	3.8	7.1	145	30	0.1	2.2
1114	3	~500	7.91	19	34	3.7	7.1	153	30	0.1	2.2
1116	4	~500	7.92	19	35	3.8	7.1	158	30	0.1	2.2
1118	5	~500	7.93	19	35	3.7	7.1	160	30	0.1	2.2

After sampling and, if accessible, depth to bottom: 15.21 ft. below TOC

Purged Dry? NO

Field Measurement Equipment Used

Equipment	Model	Serial Number	Equipment	Model	Serial Number
Water Quality Meter	Horiba U10	301010	PID	MiniRae	104512
Turbidimeter	"	"	Filter Apparatus		
Water Level Meter	Solinst	28398	Other		
Pump	Grundfos	0135 1430	Other		

Groundwater Samples Collected (check all that apply)

Analytes of Concern

Off-Site Lab

Metals	X		
PCBs	X		
Pesticides	X		
SVOCs	X		
TPH-e			
TPH-p			
VOCs			
		Hexchrom	X

Fate and Transport Data

Off-Site Lab

Chloride	
Alkalinity	
Ethane	
Ethene	
Hydrogen	
TDS	
TSS	X

Field Test Kit Analyses

	Unfiltered	Filtered
Fe^{2+} (mg/L)		
Mn^{2+} (mg/L)		

Filter where turbidity > 50 NTU

Downhole Dissolved Oxygen

Top (mg/L)	
Middle (mg/L)	
Bottom (mg/L)	

Sample Number: 0414T003

Sample Date/Time: 3-29-04 @ 1123

QA/QC Sample(s)? [ ] None [X] Field Dup [ ] MS/MSD

Dup. Sample Time 1129 Dup. Sample Number 0414T004

Sample Depth (ft. below TOC): 11.45

Reviewed by: S. Callahan

Date: 3/31/04

Method of Extraction:
- [X] Submersible Pump
- [ ] Peristaltic Pump
- [ ] Disposable Bailer

Method of Sampling:
- [X] Submersible Pump
- [ ] Peristaltic Pump
- [ ] Disposable Bailer

KLEINFELDER

MONITORING WELL SAMPLING SHEET

Well No.: IR26MW48A

Sheet 1 of ___

Personnel: Pete H. Latanya S.

Day: Monday

Date: 3/29/04

Casing Volume = Gallons

Initial depth to water: 6.88 ft. below top of casing

[casing volume = water column height (ft) x 0.03 gal/ft (0.75-inch well) or 0.163 gal/ft (2-inch well) or 0.652 gal/ft (4-inch well)]

Organic Vapor Concentrations

Top of Casing: Ø ppm Background: Ø ppm

Groundwater Parameters

Time	~~Cumulative~~ Approx Volume Purged (L)	Approx Discharge Rate (mL/min)	Depth to water (ft. below TOC)	Temperature (°C)	Specific Conductivity (mS/cm)	Dissolved Oxygen (mg/L)	pH	ORP (mv)	Turbidity (NTU)	~~PID/OVM~~ Sal (ppm)
1135	1	250	8.25	18	3.5	0.6	7.3	243	27	2.2
1145	3	100	8.40	20	34	0.0	7.3	220	27	2.2
1150	5	100-300	8.42	21	34	-0.1	7.2	210	27	2.2
1156	6	100	8.90	21	34	-0.1	7.2	211	27	2.2
1159	6.5	100	8.92	22	34	-0.1	7.2	213	26	2.2

After sampling and, if accessible, depth to bottom: ~13 ft. below TOC Purged Dry? N

Field Measurement Equipment Used

Equipment	Model	Serial Number	Equipment	Model	Serial Number
Water Quality Meter	Horiba	305005	PID	MiniRae	104517
Turbidimeter			Filter Apparatus		
Water Level Meter	Solinst	25520	Other		
Pump	Grundfos	2" Pump 68	Other		

Groundwater Samples Collected (check all that apply)

Analytes of Concern – Off-Site Lab				Fate and Transport Data – Off-Site Lab	
Metals	X			Chloride	
PCBs	X			Alkalinity	
Pesticides	X			Ethane	
SVOCs	X			Ethene	
TPH-e				Hydrogen	
TPH-p				TDS	
VOCs				TSS	X
		Hexchrom	X		

Field Test Kit Analyses

	Unfiltered	Filtered
Fe^{2+} (mg/L)		
Mn^{2+} (mg/L)		

Filter where turbidity > 50 NTU

Downhole Dissolved Oxygen

Top (mg/L)	
Middle (mg/L)	
Bottom (mg/L)	

Sample Number: 0414H013

Sample Date/Time: 3/29/04 1115

QA/QC Sample(s)? ☐ None ☐ Field Dup ☒ MS/MSD

Dup. Sample Time Same Dup. Sample Number Same

Sample Depth (ft. below TOC): 13

Reviewed by: S. Gillaham

Date: 3/31/04

Method of Extraction: ☒ Submersible Pump ☐ Peristaltic Pump ☐ Disposable Bailer

Method of Sampling: ☒ Submersible Pump ☐ Peristaltic Pump ☐ Disposable Bailer

KLEINFELDER

MONITORING WELL SAMPLING SHEET

Well No.: JR46MW37A

Sheet 1 of __

Personnel: S. Titus / L. Chavez

Day: Monday

Date: 3-29-04

Casing Volume = Gallons

Initial depth to water: 6.41 ft. below top of casing

[casing volume = water column height (ft) x 0.03 gal/ft (0.75-inch well) or 0.163 gal/ft (2-inch well) or 0.652 gal/ft (4-inch well)]

Organic Vapor Concentrations

Top of Casing: 0.1 ppm Background: 0.1 ppm

Groundwater Parameters

Time	Cumulative Volume Purged (L)	Discharge Rate (mL/min)	Depth to water (ft. below TOC)	Temperature (°C)	Specific Conductivity (mS/cm)	Dissolved Oxygen (mg/L)	pH	ORP (mv)	Turbidity (NTU)	PID/OVM (ppm)	SAO2
1409			6.35								
1419	1	~500	6.53	19	1.8	1.5	8.2	116	30	0.1	0.1
1421	2	~500	6.56	20	1.8	1.3	8.2	158	30	0.1	0.1
1423	3	~500	6.56	20	1.8	1.3	8.2	165	30	0.1	0.1
1425	4	~500	6.55	21	1.8	1.3	8.2	186	30	0.1	0.1
1427	5	~500	6.55	21	1.9	1.3	8.2	185	30	0.1	0.1
1429	6	~500	6.51	21	1.9	1.4	8.2	187	30	0.1	0.1

After sampling and, if accessible, depth to bottom: 20.86 ft. below TOC Purged Dry? NO

Field Measurement Equipment Used

Equipment	Model	Serial Number	Equipment	Model	Serial Number
Water Quality Meter	Horiba U-10	301010	PID	Mini Rae	
Turbidimeter	"	"	Filter Apparatus		
Water Level Meter	Solinst	28398	Other		
Pump	Grundfos	01351430	Other		

Groundwater Samples Collected (check all that apply)

Analytes of Concern (Off-Site Lab)				Fate and Transport Data: Off-Site Lab	
Metals	X			Chloride	
PCBs				Alkalinity	
Pesticides				Ethane	
SVOCs				Ethene	
TPH-e	X			Hydrogen	
TPH-p	X			TDS	
VOCs	X			TSS	X
		Hex Chrom	X		

Field Test Kit Analyses

	Unfiltered	Filtered
Fe^{2+} (mg/L)		
Mn^{2+} (mg/L)		

Filter where turbidity > 50 NTU

Downhole Dissolved Oxygen

Top (mg/L)	
Middle (mg/L)	
Bottom (mg/L)	

Sample Number: 0414T005 / JR46EB006 Sample Date/Time: 3-29-04 @ 1433 & 1500

QA/QC Sample(s)? [X] None [ ] Field Dup [ ] MS/MSD

Dup. Sample Time _____ Dup. Sample Number _____

Sample Depth (ft. below TOC): 13.63

Reviewed by: S. Callahan

Date: 3/31/04

Method of Extraction:
- [X] Submersible Pump
- [ ] Peristaltic Pump
- [ ] Disposable Bailer

Method of Sampling:
- [X] Submersible Pump
- [ ] Peristaltic Pump
- [ ] Disposable Bailer

KLEINFELDER

MONITORING WELL SAMPLING SHEET

Well No.: TR61MW05A

Sheet ___ of ___

Personnel: B. Metcalfe / D. Nguyen

Day: Mon.

Date: 3/29/04

Casing Volume = 9.26 Gallons

Initial depth to water: 6.58 ft. below top of casing

[casing volume = water column height (ft) x 0.03 gal/ft (0.75-inch well) or 0.163 gal/ft (2-inch well) or 0.652 gal/ft (4-inch well)]

Organic Vapor Concentrations

Top of Casing: 0.1 ppm Background: 0.1 ppm

Groundwater Parameters

Time	Cumulative Volume Purged (L)	Discharge Rate (mL/min)	Depth to water (ft. below TOC)	Temperature (°C)	Specific Conductivity (mS/cm)	Dissolved Oxygen (mg/L)	pH	ORP (mv)	Turbidity (NTU)	~~PID/OVM~~ Salinity (ppm)
1408	3.1	1550	7.25	16.7	3.15	1.58	7.06	144	252	0.15
1412	4.4	325	7.60	17.0	3.16	1.45	7.09	158	244	0.15
1418	6.5	350	7.52	19.1	3.10	1.39	7.09	156	208	0.15
1423	8.2	350	7.51	19.9	3.14	1.42	7.10	~~186~~ 159	186	0.15
1429			7.51	20.0	3.16	1.39	7.10		176	0.15

BLM 3/24/04

After sampling and, if accessible, depth to bottom: 20.75 ft. below TOC Purged Dry? N

Field Measurement Equipment Used

Equipment	Model	Serial Number	Equipment	Model	Serial Number
Water Quality Meter	Horiba U-10	305006	PID	MiniRae	104591
Turbidimeter			Filter Apparatus		
Water Level Meter	Solinst	23998	Other ORP	Orion	35650-02
Pump	Grundfos	02082264	Other		

Groundwater Samples Collected (check all that apply)

Analytes of Concern (Off-Site Lab)				Fate and Transport Data (Off-Site Lab)	
Metals	X			Chloride	
PCBs				Alkalinity	
Pesticides				Ethane	
SVOCs				Ethene	
TPH-e	X			Hydrogen	
TPH-p	X			TDS	
VOCs	X			TSS	X
		Hexchrom	X		

Field Test Kit Analyses	Unfiltered	Filtered
Fe^{2+} (mg/L)		
Mn^{2+} (mg/L)		

Filter where turbidity > 50 NTU

Downhole Dissolved Oxygen	
Top (mg/L)	
Middle (mg/L)	
Bottom (mg/L)	

Sample Number: 04MW015

Sample Date/Time: 3/29/04 1435

QA/QC Sample(s)? ☐ None ☒ ~~Field Dup~~ Rinsate BLM 3/29/04 ☐ MS/MSD

Dup. Sample Time 1445 BLM 3/29/04 Dup. Sample Number TR61EB007

Sample Depth (ft. below TOC): ≈ 14

Method of Extraction: ☒ Submersible Pump ☐ Peristaltic Pump ☐ Disposable Bailer

Method of Sampling: BLM 3/29/04 ☒ Submersible Pump ☐ Peristaltic Pump ☐ Disposable Bailer

Reviewed by: S. Callahan

Date: 3/31/04

KLEINFELDER

MONITORING WELL SAMPLING SHEET

Well No.: PASOMW01A

Sheet 1 of 1

Personnel: Pete H. Lestyne S.

Day: Monday

Date: 3/29/04

Casing Volume = ~~Gallons~~

Initial depth to water: 7.58 ft. below top of casing

[casing volume = water column height (ft) x 0.03 gal/ft (0.75-inch well) or 0.163 gal/ft (2-inch well) or 0.652 gal/ft (4-inch well)]

Organic Vapor Concentrations

Top of Casing: Ø ppm Background: Ø ppm

Groundwater Parameters

Time	Cumulative Volume Purged (L)	Discharge Rate (mL/min)	Depth to water (ft. below TOC)	Temperature (°C)	Specific Conductivity (mS/cm)	Dissolved Oxygen (mg/L)	pH	ORP (mv)	Turbidity (NTU)	PID/OVM (ppm)
1410	3	500	7.8	19	2.9	6.6	7.4	248	27	~~[illegible]~~ 0.1
1415	6	"	7.80	20	2.8	5.7	7.4	252	27	0.1
1418	9	"	7.85	20	2.6	4.9	7.4	254	27	0.1
1420	10	"	7.85	20	2.6	1.8	7.4	259	26	0.1
1424	12	"	8.0	20	2.6	1.9	7.4	258	20	0.1

After sampling and, if accessible, depth to bottom: 20 ft. below TOC

Purged Dry? N

Field Measurement Equipment Used

Equipment	Model	Serial Number	Equipment	Model	Serial Number
Water Quality Meter	Solinst	25770	PID	Mini Rae	408517
Turbidimeter			Filter Apparatus		
Water Level Meter	Florida	305005	Other		
Pump	Equipco	2" pump 68	Other		

Groundwater Samples Collected (check all that apply)

Analytes of Concern

Off-Site Lab

Metals	X		
PCBs			
Pesticides			
SVOCs			
TPH-e	X		
TPH-p	X		
VOCs	X		

Fate and Transport Data

Off-Site Lab

Chloride	
Alkalinity	
Ethane	
Ethene	
Hydrogen	
TDS	
TSS	X

Field Test Kit Analyses

	Unfiltered	Filtered
Fe^{2+} (mg/L)		
Mn^{2+} (mg/L)		

Filter where turbidity > 50 NTU

Downhole Dissolved Oxygen

Top (mg/L)	
Middle (mg/L)	
Bottom (mg/L)	

Sample Number: 0414H014

Sample Date/Time: 3/29/04 1440

QA/QC Sample(s)? ☐ None ☐ Field Dup ☒ rinsate ☐ MS/MSD

Dup. Sample Time 1440 Dup. Sample Number PASOB008

Sample Depth (ft. below TOC): ~15'

Reviewed by: S. Callahan

Date: 3/31/04

Method of Extraction:

- ☒ Submersible Pump
- ☐ Peristaltic Pump
- ☐ Disposable Bailer

Method of Sampling:

- ☒ Submersible Pump
- ☐ Peristaltic Pump
- ☐ Disposable Bailer

KLEINFELDER

MONITORING WELL SAMPLING SHEET

Well No.: 11T03MW11A

Sheet 1 of 1

Personnel: S. Titus / L. Chavez

Day: Tuesday

Date: 3 30 04

Casing Volume = Gallons

Initial depth to water: 6.50 ft. below top of casing

[casing volume = water column height (ft) x 0.03 gal/ft (0.75-inch well) or 0.163 gal/ft (2-inch well) or 0.652 gal/ft (4-inch well)]

Organic Vapor Concentrations

Top of Casing: 0.2 ppm Background: 0.1 ppm

Groundwater Parameters

Time	Cumulative Volume Purged (L)	Discharge Rate (mL/min)	Depth to water (ft. below TOC)	Temperature (°C)	Specific Conductivity (mS/cm)	Dissolved Oxygen (mg/L)	pH	ORP (mv)	Turbidity (NTU)	PID/OVM (ppm)	Sol 2
0851			6.47								
0911	1	~333	6.48	18	3.5	0.5	7.6	145	10	0.9	0.3
0914	2	~333	6.47	18	6.5	0.2	7.7	128	10	0.9	0.4
0917	3	~333	6.47	18	6.9	0.3	7.7	105	10	0.9	0.4
0920	4	~333	6.47	18	7.0	0.3	7.7	105	10	1.1	0.4
0923	5	~333	6.48	21	6.5	0.4	7.7	102	10	1.2	0.4
0926	6	~333	6.48	21	6.6	0.2	7.7	73	10	1.0	0.4
0929	7	~333	6.47	21	6.6	0.2	7.7	88	10	1.0	0.4
0932	8	~333	6.47	20	6.7	0.2	7.7	86	10	1.0	0.4

After sampling and, if accessible, depth to bottom: 19.94 ft. below TOC Purged Dry? NO

Field Measurement Equipment Used

Equipment	Model	Serial Number	Equipment	Model	Serial Number
Water Quality Meter	Horiba U10	3060007	PID	MiniRae	104512
Turbidimeter	"	"	Filter Apparatus		
Water Level Meter	Solinst	23998	Other		
Pump	Grundfos	01351430	Other		

Groundwater Samples Collected (check all that apply)

Analytes of Concern (Off-Site Lab)				Fate and Transport Data (Off-Site Lab)	
Metals	X			Chloride	
PCBs				Alkalinity	
Pesticides				Ethane	
SVOCs				Ethene	
TPH-e	X			Hydrogen	
TPH-p	X			TDS	
VOCs	X			TSS	X
		Hex Chrom	X		

Field Test Kit Analyses

	Unfiltered	Filtered
Fe^{2+} (mg/L)		
Mn^{2+} (mg/L)		

Filter where turbidity > 50 NTU

Downhole Dissolved Oxygen

Top (mg/L)	
Middle (mg/L)	
Bottom (mg/L)	

Sample Number: 0414TOC & 11T03EB009 Sample Date/Time: 0938 / 1008

QA/QC Sample(s)? [X] None [ ] Field Dup [ ] MS/MSD

Dup. Sample Time _____ Dup. Sample Number _____

Sample Depth (ft. below TOC): 13.02

Reviewed by: S. Callahan

Date: 3/31/04

Method of Extraction: [✓] Submersible Pump [ ] Peristaltic Pump [ ] Disposable Bailer

Method of Sampling: [✓] Submersible Pump [ ] Peristaltic Pump [ ] Disposable Bailer

APPENDIX C

Chain-of-Custody Records for Samples, January to March 2004 Sampling Event

CHAIN OF CUSTODY RE[illegible]D

APPL, Inc.
4203 W. Swift
Fresno, CA 93722

Phone: (559) 275 2175

Fax: (559) 275-4422

C.O.C. № 15634

Report to: PLEASE PRINT		Invoice to: PLEASE PRINT	
Company Name: Kleinfelder	Phone:	Company Name: Kleinfelder	Phone:
Address:	Fax:	Address:	Fax:
Attn:		Attn:	

Project Name/Number: Hunters Point 141330

Purchase Order Number:

Sampler (Print): Latanya Spears, Pete Holland, Brian Melcalfe, David Nguyen

Sampler (Signature): [signature] Latanya Spears [signature]

Analysis Requested/Method Number

Date Shipped: 3/23/04

Carrier: Aerospeed

Waybill No.:

Comments:

Sample Identification	Location	Date Collected	Time Collected	Matrix	Number of Containers	Metals 6010B/7000 SW-846 CLP	KCl's SW-846 CLP	TPH SW-846	TSS 160.2 MCAWW	Hexavalent Chromium 7196A SW-846							NEW SAMPLE ID#
1R10MW13A1	Parcel B	3/22/04	15:15	H_2O	3		X										0413M001
1R10MW14A	Parcel B	3/22/04	15:45	H_2O	3		X						0413H001				~~0413H002~~ 3/24/04
1R10MW12A	Parcel B	3/23/04	7:53	H_2O	8		X		X	X							0413M002
1R10MW31A1	Parcel B	3/23/04	10:10	H_2O	5	X	X	X	X	X							0413H002
Trip Blank	Trip Blank/APPL	3/03/04	—	H_2O	~~2~~ 4 sec												1R10TB001
Temp Blank	Temp Blank/APPL	—	—	H_2O	1												—

[signature] 3/25/04

[signature] 3/25/04

Shuttle Temperature:

Turnaround Requested: MUST CHECK ONE

☒ Standard (2-3 week) ☐ One week ☐ 24-48 hour

Sample Disposal:

☐ Return to client ☒ Disposal by Lab (30-day retention)

Relinquished by sampler:	Date	Time	Received by:	Relinquished by:	Date	Time	Received by:

Relinquished by:	Date	Time	Received by:	Relinquished by:	Date	Time	Received at lab by:
Tricia Renton	3/23/04	3:15 pm					

White: Return to client with report Yellow: Laboratory Copy Pink: Sampler

CHAIN OF CUSTODY RECORD

APPL, Inc.
4203 W. Swift
Fresno, CA 93722

Phone: (559) 275 2175

Fax: (559) 275-4422

C.O.C. № 15635

Report to: PLEASE PRINT		Invoice to: PLEASE PRINT	
Company Name: Kleinfelder	Phone:	Company Name: Kleinfelder	Phone:
Address:	Fax:	Address:	Fax:
Attn:		Attn:	

Project Name/Number: 41330 / Hunter S Point

Sampler (Print): Brian Metcalfe, David Nguyen

Purchase Order Number:

Sampler (Signature): [signature] [signature]

Analysis Requested/Method Number: Metals 6010 B/7000 Sw-846 CLP; Hex Chrom 7196A Sw-846; VOCs Sw-846 5030/8260B CLP TPH 3/25/04 Pr Stacie; TPH Sw-846 9045/9045C 8015B RL; TSS 160.2 MLAWW

Date Shipped: 3/23/04

Carrier: Aerospeed

Waybill No.:

Comments:

Sample Identification	Location	Date Collected	Time Collected	Matrix	Number of Containers	Metals 6010 B/7000 Sw-846 CLP	Hex Chrom 7196A Sw-846	VOCs Sw-846 5030/8260B CLP	TPH Sw-846 9045/9045C	TSS 160.2 MLAWW	NEW ID#
IR07MW19A	Parcel B	3/23/04	1140	H_2O	8	X	X	X	X	X	0413M003
IR07MW19A-Dup. ~~Rinsate~~	Parcel B-Dei Rinsate	3/23/04	1213	H_2O	8	X	X	X	X	X	0413M004
Trip Blanks	Trip Blank/APPL	3/3/04	—	H_2O	4	~~X~~ SC	~~X~~ SC	X	~~X~~ SC	~~X~~ SC	IR07TB001

[signature] 3/25/04

[signature] 03/25/04

Shuttle Temperature:

Turnaround Requested: MUST CHECK ONE
☒ Standard (2-3 week) ☐ One week ☐ 24-48 hour

Sample Disposal:
☐ Return to client ☒ Disposal by Lab (30-day retention)

Relinquished by sampler:	Date	Time	Received by:	Relinquished by:	Date	Time	Received by:
Relinquished by: [signature]	Date 3/23/04	Time 3:15 pm	Received by:	Relinquished by:	Date	Time	Received at lab by:

White: Return to client with report Yellow: Laboratory Copy Pink: Sampler

CHAIN OF CUSTODY RECORD

APPL, Inc.
4203 W. Swift
Fresno, CA 93722

Phone: (559) 275 2175

Fax: (559) 275-4422

C.O.C. № 15636

Report to: PLEASE PRINT		Invoice to: PLEASE PRINT	
Company Name: Kleinfelder	Phone:	Company Name: Kleinfelder	Phone:
Address:	Fax:	Address:	Fax:
Attn:		Attn:	

Dt 3/25/04 per Stacie CLP

Project Name/Number	Sampler (Print)	Date Shipped: 3/23/04
41330/Hunters Point	Pete Holland, Latanya Spears	Carrier: Aerospeed
Purchase Order Number	Sampler (Signature)	Waybill No.:
	[signature] Latanya Spears	Comments:

Analysis Requested/Method Number

Sample Identification	Location	Date Collected	Time Collected	Matrix	Number of Containers	Metals 6010B/7000 ~~SW-846~~ CLP	Hexchrom 7196A SW-846	VOCs SW-846 ~~5030/8260B~~ CLP	SVOCs SW-846 ~~8270C~~ CLP	Pesticides SW-846 ~~8081A/8141A~~ CLP	PCBs SW-846 ~~8082~~ CLP	TPH SW-846 ~~9040/9045C~~	TSS 160.2 MCAWW				NEW ID#
IRD6MW42A	Parcel B	3/23/04	1210	H_2O	14	X	X	X	X	X	X	X	X				0413H003
~~IRD6MW42A~~																	

[signature] 3/25/04

Shuttle Temperature:	Turnaround Requested: MUST CHECK ONE	Sample Disposal:
	☒ Standard (2-3 week) ☐ One week ☐ 24-48 hour	☐ Return to client ☒ Disposal by Lab (30-day retention)

Relinquished by sampler:	Date	Time	Received by:	Relinquished by:	Date	Time	Received by:
Relinquished by: [signature]	Date 3/24	Time 3:15pm	Received by:	Relinquished by:	Date	Time	Received at lab by:

White: Return to client with report Yellow: Laboratory Copy Pink: Sampler

CHAIN OF CUSTODY RECORD

APPL, Inc.
4203 W. Swift
Fresno, CA 93722

Phone: (559) 275 2175
Fax: (559) 275-4422

C.O.C. № 15637

Report to: PLEASE PRINT		Invoice to: PLEASE PRINT	
Company Name: Kleinfelder	Phone:	Company Name: Kleinfelder	Phone:
Address:	Fax:	Address:	Fax:
Attn:		Attn:	

Project Name/Number	Sampler (Print)	Date Shipped: 3/23/04
41330/Hunters Point	Pete Holland, LaTanya Spears	Carrier: AeroSpeed
Purchase Order Number	Sampler (Signature): [signature] Latanya Spears	Waybill No.:
		Comments:

Analysis Requested/Method Number

Sample Identification	Location	Date Collected	Time Collected	Matrix	Number of Containers	Metals 6010B/7000 SW-846 CLP	Hex Chrom 7196A SW-846	VOCs SW-846 CLP 5030/8260B	SVOCs SW-846 8270C CLP	Pesticides SW-846 8081A/8141A CLP	PCBs SW-846 8082 CLP	TPH SW-846 9040/9045C	TSS 160.2 MCAWW				NEW ID#
IR06MW42A-Rinsate	Parcel B	3/23/04	1245	H_2O	14	X	X	X	X	X	X	X	X				IR06EB001

[signature] 3/25/04

Shuttle Temperature:	Turnaround Requested: MUST CHECK ONE	Sample Disposal:
	[X] Standard (2-3 week) [ ] One week [ ] 24-48 hour	[ ] Return to client [X] Disposal by Lab (30-day retention)

Relinquished by sampler:	Date	Time	Received by:	Relinquished by:	Date	Time	Received by:

Relinquished by:	Date	Time	Received by:	Relinquished by:	Date	Time	Received at lab by:
Tricia Renton	3/23/04	3:15pm					

White: Return to client with report Yellow: Laboratory Copy Pink: Sampler

CLP & SW-846

CHAIN OF CUSTODY RECORD

APPL, Inc.
4203 W. Swift
Fresno, CA 93722

Phone: (559) 275 2175

Fax: (559) 275-4422

C.O.C. № 15638

Report to: PLEASE PRINT		Invoice to: PLEASE PRINT	
Company Name: Kleinfelder	Phone:	Company Name: Kleinfelder	Phone:
Address:	Fax:	Address:	Fax:
Attn:		Attn:	

Project Name/Number	Sampler (Print)	Date Shipped: 3/23/04
341330 / HPNS	Pete Holland / Lorraine Spears / Brian Melcher / David Nguyen	Carrier: Aerospeed
Purchase Order Number	Sampler (Signature)	Waybill No.:
	[signature]	Comments:

Analysis Requested/Method Number: VOCs Sw 846 8260B

Sample Identification	Location	Date Collected	Time Collected	Matrix	Number of Containers	VOCs Sw 846 8260B											NEW ID#
IR10MW61A	Parcel B	3/23/04	1503	H_2O	3	X											0413M005
IR10MW62A	Parcel B	3/23/04	1505	H_2O	3	X											0413H004
TRIP BLANK	Trip Blank/APPL	~~3/4/04~~ 3/23/04 PA per Stacie	—	H_2O	2	X											IR10TB002
																	[signature] 3/25/04

Shuttle Temperature:	Turnaround Requested: MUST CHECK ONE	Sample Disposal:
	☒ Standard (2-3 week) ☐ One week ☐ 24-48 hour	☐ Return to client ☒ Disposal by Lab (30-day retention)

Relinquished by sampler:	Date	Time	Received by:	Relinquished by:	Date	Time	Received by:
[signature]	3/23/04	3:15pm					
Relinquished by:	Date	Time	Received by:	Relinquished by:	Date	Time	Received at lab by:

White: Return to client with report Yellow: Laboratory Copy Pink: Sampler

SW-846

CHAIN OF CUSTODY RECORD

APPL, Inc.
4203 W. Swift
Fresno, CA 93722

Phone: (559) 275 2175

Fax: (559) 275-4422

C.O.C. № 15639

03/25/04 12: 5 847 3454 BAYCOPY PLUS 012

Report to: PLEASE PRINT
Company Name: Kleinfelder
Address:
Phone:
Fax:
Attn:

Invoice to: PLEASE PRINT
Company Name: Kleinfelder
Address:
Phone:
Fax:
Attn:

1R09EB

Project Name/Number: 41330/Hunters Point
Purchase Order Number:
Sampler (Print): Brian C. Dierkhe, LaTonya Sparis, David Dwyer
Sampler (Signature):

Date Shipped: 3/24/04
Carrier: APPL / Leonard Fong
Waybill No.:
Comments:

Analysis Requested/Method Number: VOCs 1P, Hexavalent Chrome, TSS 160.2

Sample Identification	Location	Date Collected	Time Collected	Matrix	Number of Containers	VOCs 1P	Hexavalent Chrome	TSS 160.2									NEW ID#
1R07MW201A-R (A1 3/24/04)	Parcel B	3/24/04	11:30	H2O	3	X						1R07EB002					~~1R07MW20A1-R~~ 3/25/04
1R07MW201A-D (A1 3/24/04)	Parcel B	3/24/04	10:57	H2O	5	X	X	X				0413M007					~~1R07MW20A1-D~~ 3/25/04
1R07MW201A	Parcel B	3/24/04	10:57	H2O	3	X											0413M006
1R07MW23A	Parcel B	3/24/04	12:40	H2O	3	X											0413H005
1R07MW23A-Rinsate	Parcel B	3/24/04	13:00	H2O	3	X						1R07EB001					
0413J027-R	[illegible]	[illegible]	[illegible]		3	X						1R09EB001					
1R07MW[illegible]	Parcel B	3/24/04	11:43	H2O	4	X	X										0413M008
0423023 ~~03/24/04~~ TB	Equipment Blank	[illegible]	—	H2O	2	X						1R07TB002					~~0423023-TB~~
1R07MW20A1	Parcel B	3/24/04	1057	H2O	1		X	X									0413M006 3/25/04

Shuttle Temperature:

Turnaround Requested: MUST CHECK ONE
☒ Standard (2-3 week) ☐ One week ☐ 24-48 hour

Sample Disposal:
☐ Return to client ☒ Disposal by Lab (30-day retention)

Relinquished by sampler:	Date	Time	Received by:	Relinquished by:	Date	Time	Received by:
LaTonya Sparis	3/24/04	4:00					
Relinquished by:	**Date**	**Time**	**Received by:**	**Relinquished by:**	**Date**	**Time**	**Received at lab by:**

White: Return to client with report Yellow: Laboratory Copy Pink: Sampler

APPL, Inc.
4203 W. Swift
Fresno, CA 93722

Phone: (559) 275 2175

Fax: (559) 275-4422

CHAIN OF CUSTODY REC

C.O.C. # 15646

Report to: (PLEASE PRINT)	Invoice to: (PLEASE PRINT)
Company Name: Kleinfelder	Company Name: Kleinfelder
Phone:	Phone:
Address:	Address:
Fax:	Fax:
Attn:	Attn:

Project Name/Number:

Purchase Order Number:

Sampler (Print): BRIAN CHRISTIANSEN, Lorenzo Brooks, David Jansen

Sampler (Signature):

Analysis Requested/Method Number: Methylene Chloride 4/30/04 SMO; Hexane Extract; SVOCs 4/30/04 SMO; Fuel Hydrocarbons 4/30/04 SMO; TPH 8015; TSS 160.2

Date Shipped:

Carrier:

Waybill No.:

Comments:

Sample Identification	Location	Date Collected	Time Collected	Matrix	Number of Containers	Methylene Chloride	Hexane Extract	SVOCs	Fuel Hydrocarbons	TPH 8015	TSS 160.2		New Sample ID #	
1R07MW27A	Parcel B	3/24/04	1443	L		X	X	X	X	X	X		0413M008	Add'l Cr6 sample 4 COC 15647
1R07MW20A1	"	↓	1057	↓		X	X			X	X			0413M006
1R07MW20A1-R	"		1130			X	X			X	X		1R07EB002	
1R07MW20A1-D	"	✓	1057	✓		X				X			0413M007	* Sample containers for 1R07MW20A1 labeled incorrectly COC correct ID. SMO 3/24/04

SMO 3/25/04

SMO 3/25/04

Shuttle Temperature:

Turnaround Requested: MUST CHECK ONE
☐ Standard (2-3 week) ☐ One week ☐ 24-48 hour

Sample Disposal:
☐ Return to client ☐ Disposal by Lab (30-day retention)

Relinquished by sampler:	Date	Time	Received by:	Relinquished by:	Date	Time	Received by:
Alonzo Jones	3/24/04	4:00	[illegible]				
Relinquished by:	Date	Time	Received by:	Relinquished by:	Date	Time	Received at lab by:
[illegible]	3/24/04	4:00					

White: Return to client with report Yellow: Laboratory Copy Pink: Sampler

CHAIN OF CUSTODY RECORD

APPL, Inc.
4203 W. Swift
Fresno, CA 93722

Phone: (559) 275 2175

Fax: (559) 275-4422

C.O.C. No. 15640

Report to: PLEASE PRINT	Invoice to: PLEASE PRINT
Company Name: Kleinfelder	Company Name: Kleinfelder
Phone:	Phone:
Address:	Address:
Fax:	Fax:
Attn:	Attn:

Project Name/Number: 41330 / Hunters Point

Purchase Order Number:

Sampler (Print): Brian C. Meaville, Tiffany Spears, David Nagel

Sampler (Signature):

Analysis Requested/Method Number: TPH 8015; TSS 160.2; Metals (Cr, Cu, Ni, Zn) 7196A; Hex Cr 7196A

Date Shipped: 3/24/04

Carrier: APPL / Leonard Fong

Waybill No.:

Comments:

Sample Identification	Location	Date Collected	Time Collected	Matrix	Number of Containers	TPH 8015	TSS 160.2	Metals (Cr, Cu, Ni, Zn) 7196A	Hex Cr 7196A	NEW ID#
1R07MW23A	Parcel B	3/24/04	12:41	H2O	5	X	X	X	X	0413H005
~~1R07MW23A1-R~~	~~Parcel B~~	~~3/24/04~~	~~11:30~~	~~H2O~~	~~4~~					~~Sal 3/24/04~~
1R06MW28A	Parcel B	3/24/04	09:30	H2O	2	X				0413H006
1R07MW23A-R	Parcel B	3/24/04				X	X	X	X	1R07EB001

Sal 3/25/04

Shuttle Temperature:

Turnaround Requested: MUST CHECK ONE
☒ Standard (2-3 week) ☐ One week ☐ 24-48 hour

Sample Disposal:
☐ Return to client ☒ Disposal by Lab (30-day storage)

Relinquished by sampler:	Date	Time	Received by:	Relinquished by:	Date	Time	Received by:
	3-24-04	4:00					
Relinquished by:	**Date**	**Time**	**Received by:**	**Relinquished by:**	**Date**	**Time**	**Received at lab by:**

White: Return to client with report Yellow: Laboratory Copy Pink: Sampler

APPL, Inc.
4203 W. Swift
Fresno, CA 93722

Phone: (559) 275 2175

Fax: (559) 275-4422

CHAIN OF CUSTODY RECORD

C.O.C. № 15642

Report to: PLEASE PRINT		Invoice to: PLEASE PRINT	
Company Name: Kleinfelder	Phone:	Company Name: Kleinfelder	Phone:
Address:	Fax:	Address:	Fax:
Attn:		Attn:	

Project Name/Number: 41330/Hunters Point

Purchase Order Number: Parcel B

Sampler (Print): Pete Holland, LaTanya Spears, Brian Metcalfe, David Nguyen

Sampler (Signature): [signature]

Date Shipped: 3/25/04

Carrier: AeroSpeed

Waybill No.:

Comments:

Sample Identification	Location	Date Collected	Time Collected	Matrix	Number of Containers	VOCs CLP	TPH	Metals	Hex Chrom	TSS	TDS	Salinity	Hold				
0413M010 / Parcel B	~~IR07MW21A~~	3/25/04	1145	L	8	X	X	X	X	X	X	X					IR07MW21A1
0413H007 / B	IR07MW24A	3/25/04	1145	L	3	X											
0413H006 / B	IR10MW28A	3/25/04	915	L	3	X											
0413M009 / B	IR18MW21A	3/25/04	920	L	3	X											
~~042503 - IR10~~	Trip Blank IR10	3/25/04	—	L	1	X											IR10TB003
~~042503 - IR18~~	Trip Blank IR18	3/25/04	—	L	1								X				IR18TB001
~~042503 - IR07~~	Trip Blank IR07	3/25/04	—	L	1								X				IR07TB003
~~IR10EB003~~	~~IR10EB003~~ MW79A	~~3/25/04~~	~~1500~~	~~L~~	~~3~~												~~NON-CLP~~
																	All Changes To COC.
																	As Per Stacie see fax.

Shuttle Temperature: 0

Turnaround Requested: MUST CHECK ONE
☒ Standard (2-3 week) ☐ One week ☐ 24-48 hour

Sample Disposal:
☐ Return to client ☒ Disposal by Lab (30-day retention)

Relinquished by sampler:	Date	Time	Received by:	Relinquished by:	Date	Time	Received by:
[signature]	3/25/04	1200	[signature]	[signature]	3/25/04	1319	
Relinquished by:	**Date**	**Time**	**Received by:**	**Relinquished by:**	**Date**	**Time**	**Received at lab by:**
					3/26/04	0830	[signature]

White: Return to client with report Yellow: Laboratory Copy Pink: Sampler

CHAIN OF CUSTODY RECORD

APPL, Inc.
4203 W. Swift
Fresno, CA 93722

Phone: (559) 275 2175

Fax: (559) 275-4422

C.O.C. № 15643

Report to: PLEASE PRINT
Company Name: Kleinfelder
Address:
Attn:
Phone:
Fax:

Invoice to: PLEASE PRINT
Company Name: Kleinfelder
Address: PA 3/30/04
Attn: CLP CLP CLP
Phone:
Fax:

Project Name/Number: 41330/Hunters Point
Purchase Order Number: Parcel B
Sampler (Print): Pete Holland, LaTonya Spears, David Nguyen, Brian Metcalfe,
Sampler (Signature):

Date Shipped: 3/25/04
Carrier: AeroSpeed
Waybill No.:
Comments:

Sample Identification	Location	Date Collected	Time Collected	Matrix	Number of Containers	Metals CLP	Hex Chrom	TSS	Pesticides	PCBs	SVOCs	TPH	TDS	Salinity		
0413H006 Parcel B	IR10MW28A	3/25/04	915	L	3	X	X	X								
0413M009 "	IR18MW21A	3/25/04	920	L	8	X	X	X	X	X	X	X				
0413H007 "	IR07MW24A	3/25/04	1145	L	5	X	X	X				X	X	X		

Shuttle Temperature:

Turnaround Requested: MUST CHECK ONE
☒ Standard (2-3 week) ☐ One week ☐ 24-48 hour

Sample Disposal:
☐ Return to client ☒ Disposal by Lab (30-day retention)

Relinquished by sampler:	Date	Time	Received by:	Relinquished by:	Date	Time	Received by:
	3/25/04	1200			3/25/04	1519	

Relinquished by:	Date	Time	Received by:	Relinquished by:	Date	Time	Received at lab by:
					3/26/04	0800	

White: Return to client with report Yellow: Laboratory Copy Pink: Sampler

CHAIN OF CUSTODY RECORD

APPL, Inc.
4203 W. Swift
Fresno, CA 93722

Phone: (559) 275 2175

Fax: (559) 275-4422

C.O.C. № 15644

Report to: PLEASE PRINT		Invoice to: PLEASE PRINT	
Company Name: Kleinfelder	Phone:	Company Name: Kleinfelder	Phone:
Address:	Fax:	Address:	Fax:
Attn:		Attn:	

Project Name/Number	Sampler (Print)	Analysis Requested/Method Number	Date Shipped:
41330/HPNS	Pete Holland Lalayupreet Sluan Titus		Carrier:
Purchase Order Number	Sampler (Signature)		Waybill No.:
			Comments:

Sample Identification		Location	Date Collected	Time Collected	Matrix	Number of Containers	VOCs-CLP	TPH-g 8015	8260									Date Shipped:
0413M012	B	1R07MW25A	3/26/04	1035	L	6	X	X										
1R07EB004	B	1R07MW25A	↓	1055	L	6	X	X										
0413H010	B	1R07MWS-4	↓	1055	L	6	X	X										
1R07EB005	B	1R07MWS-4	↓	1120	L	6	X	X										
0413T001	B	1R10MW71A	↓	1109	L	3	X		X									
1R10EB001	B	1R10MW71A	3/25/04	1129	L	3	X		X									Sample date 3/26/04
0413H008	B	1R10MW79A	3/25/04	1445	L	3	X		X									
1R10EB003	B	1R10MW79A	↓	1500	L	3	X		X									
1R10EB002		1R10EB	↓	1515	L	3	X											

delete CLP add 8260 3/30/04

3/26/04 1R10MW75A well dry

Shuttle Temperature:	Turnaround Requested: MUST CHECK ONE	Sample Disposal:
	☐ Standard (2-3 week) ☐ One week ☐ 24-48 hour	☐ Return to client ☐ Disposal by Lab (30-day retention)

Relinquished by sampler:	Date	Time	Received by:	Relinquished by:	Date	Time	Received by:
	3/26/04	1240	Patricia Renton				
Relinquished by:	**Date**	**Time**	**Received by:**	**Relinquished by:**	**Date**	**Time**	**Received at lab by:**
					3-27-4	8:04	

White: Return to client with report Yellow: Laboratory Copy Pink: Sampler

CHAIN OF CUSTODY RECORD

APPL, Inc.
4203 W. Swift
Fresno, CA 93722

Phone: (559) 275 2175

Fax: (559) 275-4422

C.O.C. № 15645

Report to: PLEASE PRINT		Invoice to: PLEASE PRINT	
Company Name: Kleinfelder	Phone:	Company Name: Kleinfelder	Phone:
Address:	Fax:	Address:	Fax:
Attn:		Attn: DA 3/30/04 [illegible] email	

Project Name/Number	Sampler (Print)	Date Shipped:
41330/Hunter's Point	Pete Hillard	Carrier:
Purchase Order Number	Sampler (Signature)	Waybill No.:
	[signature]	Comments:

Analysis Requested/Method Number

Sample Identification	Period	Location	Date Collected	Time Collected	Matrix	Number of Containers	Metals CLP ~~6010B~~	Hex 7196A Chrom	TSS 160.2	SVOCs CLP ~~7020C~~	Pest CLP ~~8081~~	PCBs CLP ~~8082~~						Comments
0414H011	B	1R26MW46A	3/29/04	1030	L	7	X	X	X	X	X	X						
0414H012	B	1R26MW46A	3/29/04	1045	L	7	X	X	X	X	X	X						Duplicate
TR 3/29/04 ~~0414M013~~		~~1R26MW41A~~	~~3/29/04~~	~~1133~~	~~L~~	~~4~~												FOR 0414H011, 0414H012 only
TR 3/29/04 ~~0414M014~~		~~1R26MW41A (duplicate)~~	~~3/29/04~~	~~1143~~	~~L~~	~~4~~												* For SVOCs: B(a)A,
																		B(a)P, B(b)F, B(k)F,
																		chrysene, DahA,
																		indeno(1,2,3-cd)pyrene
																		* For Pesticides:
																		Chlordane
																		* For PCBs: Aroclor
																		1260
																		* For Metals: As, Cr, Cu,
																		Pb, Mn, Hg, Zn

Shuttle Temperature:	Turnaround Requested: MUST CHECK ONE	Sample Disposal:
3°	☒ Standard (2-3 week) ☐ One week ☐ 24-48 hour	☐ Return to client ☐ Disposal by Lab (30-day retention)

Relinquished by sampler:	Date	Time	Received by:	Relinquished by:	Date	Time	Received by:
Pete Hillard	3/29/04	1340	Patricia Kenton				
Relinquished by:	**Date**	**Time**	**Received by:**	**Relinquished by:**	**Date**	**Time**	**Received at lab by:**
Patricia Kenton	3/29/04	1425					

White: Return to client with report Yellow: Laboratory Copy Pink: Sampler

CHAIN OF CUSTODY RECORD

APPL, Inc.
4203 W. Swift
Fresno, CA 93722

Phone: (559) 275 2175

Fax: (559) 275-4422

C.O.C. № 15647

Report to: PLEASE PRINT		Invoice to: PLEASE PRINT	
Company Name: Kleinfelder	Phone:	Company Name: Kleinfelder	Phone:
Address:	Fax:	Address:	Fax:
Attn:		Attn:	

3/30/01 DA

Project Name/Number	Sampler (Print)	Analysis Requested/Method Number	Date Shipped:
41330/HPNS	Pete Holland, Zulamyadsrem, Susan Tilty		Carrier:
Purchase Order Number	Sampler (Signature)		Waybill No.:
			Comments:

Sample Identification	Preserved	Location	Date Collected	Time Collected	Matrix	Number of Containers	Metals CLP ICP/MS	Hex Chrom 7196A	TPH-e 8015	TSS 160.2	TDS 160.1	Sulfate 375.2/9056					
0413H010	B	IR07MWS-4	3/26/04	1055	L	4	X	X	X	X	X	X					
IR07EB005	B	IR07MWS-4	↓	1120	L	3	X	X	X								
0413M012	B	IR07MW25A	↓	1035	L	4	X	X	X	X	X	X					
IR07EB004	B	IR07MW25A	↓	1055	L	3	X	X	X								

3/26/04

7/5/01

Shuttle Temperature:	Turnaround Requested: MUST CHECK ONE	Sample Disposal:
	☐ Standard (2-3 week) ☐ One week ☐ 24-48 hour	☐ Return to client ☐ Disposal by Lab (30-day retention)

Relinquished by sampler:	Date	Time	Received by:	Relinquished by:	Date	Time	Received by:
Pete Holland	3/26/04	1240	Patrizia Renton				
Relinquished by:	**Date**	**Time**	**Received by:**	**Relinquished by:**	**Date**	**Time**	**Received at lab by:**
					3-27-4	8:04am	[illegible]

White: Return to client with report Yellow: Laboratory Copy Pink: Sampler

APPL, Inc.
4203 W. Swift
Fresno, CA 93722

Phone: (559) 275 2175

Fax: (559) 275-4422

C.O.C. № 15648

Report to: PLEASE PRINT		Invoice to: PLEASE PRINT	
Company Name: Kleinfelder	Phone:	Company Name: Kleinfelder	Phone:
Address:	Fax:	Address:	Fax:
Attn:		Attn:	

Project Name/Number	Sampler (Print)	Date Shipped:
41330/HPNS	Pete Holland	Carrier:
Purchase Order Number	Sampler (Signature)	Waybill No.:
	[signature]	Comments:

Analysis Requested/Method Number

Sample Identification		Location	Date Collected	Time Collected	Matrix	Number of Containers	VOCs-clp	TPHp 8015									Comments
0414H009	B	1R25MW17A	3/29/04	0915	L	6	X	X									
1R25TB005	B	1R25 [illegible] 26A	3/29/04	0915	L	3	X	X									change to ID requested by Sarah via telephone to DA 3/30/04
0414T002	B	1R07MW31A	3/29/04	0931	L	6	X	X									
0414M011	B	1R07MWS-2	3/29/04	0935	L	6	X	X									
0414M013	B	1R26MW41A	3/29/04	1138	L	6	X	X									
0414M014	B	1R26MW41A	3/29/04	1143	L	6	X	X									Displicate
0414T005	B	1R46MW37A	3/29/04	1433	L	~~6~~ 5	X	X									
1R46EB006	B	1R46MW37A	3/29/04	1500	L	6	X	~~X~~									
0414H014	B	PA50MW01A	3/29/04	1440	L	6	X	X									
PA50EB008	B	PA50MW01A	3/29/04	1440	L	6	X	X									

Shuttle Temperature: 3°

Turnaround Requested: MUST CHECK ONE
☒ Standard (2-3 week) ☐ One week ☐ 24-48 hour

Sample Disposal:
☐ Return to client ☐ Disposal by Lab (30-day retention)

Relinquished by sampler:	Date	Time	Received by:	Relinquished by:	Date	Time	Received by:
[signature]	3/29/04	1545	Patricia Renton				
Relinquished by:	**Date**	**Time**	**Received by:**	**Relinquished by:**	**Date**	**Time**	**Received at lab by:**
Patricia Renton	3/29/04	1615					

White: Return to client with report Yellow: Laboratory Copy Pink: Sampler

APPL, Inc.
4203 W. Swift
Fresno, CA 93722

Phone: (559) 275 2175

Fax: (559) 275-4422

CHAIN OF CUSTODY RECORD

C.O.C. № 15649

Report to: PLEASE PRINT		Invoice to: PLEASE PRINT	
Company Name: Kleinfelder	Phone:	Company Name: Kleinfelder	Phone:
Address:	Fax:	Address:	Fax:
Attn:		Attn:	

Project Name/Number: Hunter's Point/41330

Purchase Order Number:

Sampler (Print): Pete Hollard

Sampler (Signature): [signature]

Analysis Requested/Method Number

Sample Identification		Location	Date Collected	Time Collected	Matrix	Number of Containers	TPHe 8015	Metals ~~6010B~~ CLP	Hex Chrom 7196A	TSS 160.2	TDS 160.1	Salinity 2520B	PCBs ~~8082~~ CLP	Pest ~~8081~~ CLP	SVOCs ~~8260~~ CLP			Date Shipped:
0414H009	B	1R25MW17A	3/29/04	0915	L	4	X	X	X	X								Carrier:
0414T002	B	1R07MW31A ~~0435~~ 1126A	3/29/04	0931	L	4	X	X	X	X	X	X						Waybill No.:
0414M011	B	1R07MW5-2	3/29/04	0935	L	4	X	X	X	X								Comments: ID change requested by Sarah via telephone
0414T003	B	1R26MW47A	3/29/04	1123	L	7		X	X	X			X	X	X			method changes per email ~~[illegible]~~ TA 3/30/04
																		For 0414T003 only:
																		* Metals for As, Cr, Cu, Pb, Mn, Hg, Zn
																		* PCBs for Aroclor 1260
																		* SVOCs for B(a)A, B(a)P, B(b)F, B(k)F, chrysene, Dah A, indeno(1,2,3-cd) pyrene
																		* Pesticides for Chlordane

Shuttle Temperature: 5°

Turnaround Requested: MUST CHECK ONE
☒ Standard (2-3 week) ☐ One week ☐ 24-48 hour

Sample Disposal:
☐ Return to client ☐ Disposal by Lab (30-day retention)

Relinquished by sampler:	Date	Time	Received by:	Relinquished by:	Date	Time	Received by:
[signature]	3/29/04	1545	Patricia Renton				
Relinquished by:	**Date**	**Time**	**Received by:**	**Relinquished by:**	**Date**	**Time**	**Received at lab by:**
Patricia Renton	3/29/04	1415					

White: Return to client with report Yellow: Laboratory Copy Pink: Sampler

CHAIN OF CUSTODY RECORD

APPL, Inc.
4203 W. Swift
Fresno, CA 93722

Phone: (559) 275 2175

Fax: (559) 275-4422

C.O.C. № 15651

Report to: PLEASE PRINT		Invoice to: PLEASE PRINT	
Company Name: Kleinfelder	Phone:	Company Name: Kleinfelder	Phone:
Address:	Fax:	Address:	Fax:
Attn:		Attn:	

Project Name/Number	Sampler (Print)	Analysis Requested/Method Number	Date Shipped:
41330 / HFNS	S. Wissler		Carrier:
Purchase Order Number	Sampler (Signature)		Waybill No.:
			Comments:

Sample Identification	Location	Date Collected	Time Collected	Matrix	Number of Containers	VOCs-CAP									
1R10TB004	1R10	3/26/04	1340	L	3	X									

3/26/04

Shuttle Temperature:	Turnaround Requested: MUST CHECK ONE	Sample Disposal:
	☐ Standard (2-3 week) ☐ One week ☐ 24-48 hour	☐ Return to client ☐ Disposal by Lab (30-day retention)

Relinquished by sampler:	Date	Time	Received by:	Relinquished by:	Date	Time	Received by:
	3/26/04	1345					
Relinquished by:	**Date**	**Time**	**Received by:**	**Relinquished by:**	**Date**	**Time**	**Received at lab by:**
					3-27-4	8:00	

White: Return to client with report Yellow: Laboratory Copy Pink: Sampler

15

CHAIN OF CUSTODY RECORD

APPL, Inc.
4203 W. Swift
Fresno, CA 93722

Phone: (559) 275 2175
Fax: (559) 275-4422

C.O.C. № 15652

Report to: PLEASE PRINT
Company Name: Kleinfelder
Address:
Attn:
Phone:
Fax:

Invoice to: PLEASE PRINT
Company Name: Kleinfelder
Address: PA 3/30/04 sub-part email
Attn:
Phone:
Fax:

Project Name/Number: 41330/Hunter's Point
Purchase Order Number:
Sampler (Print): Swin Titus
Sampler (Signature): [signature]

Date Shipped:
Carrier:
Waybill No.:
Comments:

Sample Identification	Location	Date Collected	Time Collected	Matrix	Number of Containers	Metals CLP 6010B	Hex Chrom 7196A	TSS 160.2	Pest CLP 8081A	PCBs CLP 8082A	SVOCs CLP 8270C	TPHe 8015					
0414T004	IR26MW47A	3/29/04	1129	L	7	X	X	X	X	X	X						Duplicate of IR26MW47A
0414M013	IR26MW41A	3/29/04	1138	L	4	X	X	X				X					
0414M014	IR26MW41A	3/29/04	1143	L	4	X	X	X				X					Duplicate of IR26MW47A

For 0414T004, 0414M013, 0414M014:
For metals – As, Cr, Cu, Pb, Mn, Hg, Zn
For PCBs – Aroclor 1260
For SVOCs – B(a)A, B(a)P, B(b)F, B(k)F, chrysene, DahA, indeno(1,2,3-cd)pyrene
~~For Pesticides – Chlordane~~

Shuttle Temperature: 4°

Turnaround Requested: MUST CHECK ONE
☒ Standard (2-3 week) ☐ One week ☐ 24-48 hour

Sample Disposal:
☐ Return to client ☐ Disposal by Lab (X-day retention)

Relinquished by sample:	Date	Time	Received by:	Relinquished by:	Date	Time	Received by:
[signature]	3/29/04	1527	Patmakenzie				
Relinquished by:	**Date**	**Time**	**Received by:**	**Relinquished by:**	**Date**	**Time**	**Received at lab by:**
Patmakenzie	3/29/04	1415					

White: Return to client with report Yellow: Laboratory Copy Pink: Sampler

4203 W. Swift
Fresno, CA 93722

Fax: (559) 275-4422

C.O.C. № 15653

Report to: PLEASE PRINT		Invoice to: PLEASE PRINT	
Company Name: Kleinfelder	Phone:	Company Name: Kleinfelder	Phone:
Address:	Fax:	Address:	Fax:
Attn:		Attn:	

DA 3/30/04 see [illegible] DA

Project Name/Number	Sampler (Print)
413301 Hunter's Point	[signature]
Purchase Order Number	Sampler (Signature)
	[signature]

Date Shipped:
Carrier:
Waybill No.:
Comments:

Analysis Requested/Method Number

Sample Identification	Location	Date Collected	Time Collected	Matrix	Number of Containers	Metals CLP ~~6010A~~	Hex Chrom 7196A	TSS 160.2	Pest CLP ~~8081~~	PCBs CLP ~~8082~~	SVOCs CLP ~~8270C~~						
0414H013 B	1R26MW48A	3/29/04	1115	L	18	X	X	X	X	X	X						MS/MSD
																	For metals: As, Cu, Cr, Hg, Zn, Pb, Mn
																	For Pesticides: Chlordane
																	For PCBs: Aroclor 1260
																	For SVOCs: B(a)A, B(a)P, B(b)F, B(k)F, Chrysene, DBhA, Indeno(123,cd)pyrene

Shuttle Temperature: 3°

Turnaround Requested: MUST CHECK ONE
☒ Standard (2-3 week) ☐ One week ☐ 24-48 hour

Sample Disposal:
☐ Return to client ☐ Disposal by Lab (30-day retention)

Relinquished by sampler:	Date	Time	Received by:	Relinquished by:	Date	Time	Received by:
[signature]	3/29/04	1345	Patricia Penton				
Patricia Penton	3/29/04	1415					

White: Return to client with report Yellow: Laboratory Copy Pink: Sampler

APPL, Inc.
4203 W. Swift
Fresno, CA 93722

Phone: (559) 275 2175

Fax: (559) 275-4422

CHAIN OF CUSTODY RECORD

C.O.C. № 15654

Report to: PLEASE PRINT		Invoice to: PLEASE PRINT	
Company Name: Kleinfelder	Phone:	Company Name: Kleinfelder	Phone:
Address:	Fax:	Address:	Fax:
Attn:		Attn:	

JA 3/30/04 JA surface email

Project Name/Number	Sampler (Print)
41330/Hunter's Point	Susan Titus
Purchase Order Number	Sampler (Signature)
	[signature]

Date Shipped:
Carrier:
Waybill No.:
Comments:

Analysis Requested/Method Number

Sample Identification	Location	Date Collected	Time Collected	Matrix	Number of Containers	Metals CLP 6010B	Hex Chrom 7196A	TSS 160.2	TPHe 8015							
0414T005 B	IR46MW37A	3/29/04	1433	L	4	X	X	X	X							
~~0~~ IR46EB006 B	IR46MW37A	3/29/04	1500	L	4	X	X	X	X	cancel TSS						
0414H014 B	PA50MW014	3/29/04	1440	L	4	X	X	X	X							
PA50EB008	PA50EB008	3/29/04	1440	L	4	X	X	X	X	cancel TDS						

JA 3/31/04 per email from Stacie

Shuttle Temperature: 3°

Turnaround Requested: MUST CHECK ONE
☒ Standard (2-3 week) ☐ One week ☐ 24-48 hour

Sample Disposal:
☐ Return to client ☐ Disposal by Lab (30-day retention)

Relinquished by sampler:	Date	Time	Received by:	Relinquished by:	Date	Time	Received by:
[signature]	3-29-04	1527	Patricia Renton				
Relinquished by: Patricia Renton	Date 3/29/04	Time 1415	Received by:	Relinquished by:	Date	Time	Received at lab by:

White: Return to client with report Yellow: Laboratory Copy Pink: Sampler

APPL, Inc.
4203 W. Swift
Fresno, CA 93722

Phone: (559) 275 2175

Fax: (559) 275-4422

C.O.C. № 15655

Report to: PLEASE PRINT		Invoice to: PLEASE PRINT	
Company Name: Kleinfelder	Phone:	Company Name: Kleinfelder	Phone:
Address:	Fax:	Address:	Fax:
Attn:		Attn:	

Project Name/Number	Sampler (Print)	Analysis Requested/Method Number	Date Shipped:
Hunter's Point / 41330	Susan Titus, Brian Metcalfe		Carrier:
Purchase Order Number	Sampler (Signature)		Waybill No.:
	[signature]		Comments:

Sample Identification	Location	Date Collected	Time Collected	Matrix	Number of Containers	VOCs-CIP	TPHp-8015									
1RG1EB007 B	1RG1MW05A	3/29/04	1455	L	6	X	X									
0414M015 B	1RG1MW05A	3/29/04	1435	L	6	X	X									

Shuttle Temperature: 3°

Turnaround Requested: MUST CHECK ONE
☒ Standard (2-3 week) ☐ One week ☐ 24-48 hour

Sample Disposal:
☐ Return to client ☐ Disposal by Lab (30-day retention)

Relinquished by samples:	Date	Time	Received by:	Relinquished by:	Date	Time	Received by:
[signature]	1550	3/29/04					
Relinquished by:	**Date**	**Time**	**Received by:**	**Relinquished by:**	**Date**	**Time**	**Received at lab by:**
Patricia Renton	3/29/04	1615					

White: Return to client with report Yellow: Laboratory Copy Pink: Sampler

CHAIN OF CUSTODY RECORD

APPL, Inc.
4203 W. Swift
Fresno, CA 93722

Phone: (559) 275 2175

Fax: (559) 275-4422

c.o.c. № 15656

PLEASE PRINT

Report to:
Company Name: Kleinfelder
Address:
Attn:
Phone:
Fax:

PLEASE PRINT

Invoice to:
Company Name: Kleinfelder
Address:
Attn: see email
Phone:
Fax:

Project Name/Number: 41330/Hunter's Point
Purchase Order Number:
Sampler (Print): BRIAN MCCALLE
Sampler (Signature):

Date Shipped:
Carrier:
Waybill No.:
Comments:

Analysis Requested/Method Number

Sample Identification		Location	Date Collected	Time Collected	Matrix	Number of Containers	Metals 6020 CLP	Hex Chrom 7196A	TSS 160.2	TPHe 8015						
1R61EB007	B	1R61MW05A	3/29/04	1455	L	4	X	X	X	X	Cancel TSS per					
0414M015	B	1R61MW05A	3/29/04	1435	L	4	X	X	X	X	email from client					
		1R61MW05A														
		N														

JX 3/31/04

Shuttle Temperature: 2°

Turnaround Requested: MUST CHECK ONE
☒ Standard (2-3 week) ☐ One week ☐ 24-48 hour

Sample Disposal:
☐ Return to client ☐ Disposal by Lab (no-day retention)

Relinquished by sampler:	Date	Time	Received by:	Relinquished by:	Date	Time	Received by:
BRIAN MCCALLE	3/29/04	1620	Patricia Kerton				

Relinquished by:	Date	Time	Received by:	Relinquished by:	Date	Time	Received at lab by:
Patricia Kerton	3/29/04	1415					

White: Return to client with report Yellow: Laboratory Copy Pink: Sampler

CHAIN OF CUSTODY RECORD

APPL, Inc.
4203 W. Swift
Fresno, CA 93722

Phone: (559) 275 2175

Fax: (559) 275-4422

C.O.C. № 15657

Report to: PLEASE PRINT		Invoice to: PLEASE PRINT	
Company Name: Kleinfelder	Phone:	Company Name: Kleinfelder	Phone:
Address:	Fax:	Address:	Fax:
Attn:		Attn:	

Project Name/Number	Sampler (Print)	Purchase Order Number	Sampler (Signature)
Hunter's Point / 41330	[illegible]	Parcel B	[illegible]

Date Shipped:
Carrier:
Waybill No.:
Comments:

Sample Identification		Location	Date Collected	Time Collected	Matrix	Number of Containers	VOCs-Clp	VOCs-non Clp	TPHe 8015B	TPHp 8015B	TSS 160.2	Metals 6010B	Hex Chrom 7196A					
0414H015	B	1R06MW45A	3/30/04	0930	L	11	X		X	X	X	X	X					
1R06TB006	—	1R06	3/30/04	—	L	3	X	X		X								
0414M016	B	1R07MW28A	3/30/04	0935	L	6	X			X								
0414T006	B	UT03MW11A	3/30/04	0938	L	6	X			X								
UT03EB009	B	UT03MW11A	3/30/04	1008	L	6	X			X								
0414H016	B	1R10MW59A	3/30/04	1120	L	3	X											
1R10EB010	B	1R10MW59A	3/30/04	1145	L	3	X											
0414H017	B	1R10MW75A	3/30/04	1340	L	3		X										non Clp well
0414M017	B	1R10MW33A	3/30/04	1215	L	9	X											includes MS/MSD
1R10EB011	B	1R10MW33A	3/30/04	1215	L	3	X											

Shuttle Temperature: 3°

Turnaround Requested: MUST CHECK ONE
☒ Standard (2-3 week) ☐ One week ☐ 24-48 hour

Sample Disposal:
☐ Return to client ☐ Disposal by Lab (30-day retention)

Relinquished by sampler:	Date	Time	Received by:	Relinquished by:	Date	Time	Received by:
[illegible]	3/30/04	1400	Patricia Renton				
Relinquished by:	**Date**	**Time**	**Received by:**	**Relinquished by:**	**Date**	**Time**	**Received at lab by:**
Patricia Renton	3/30/04	1515			3/31/04	0800	[illegible]

White: Return to client with report Yellow: Laboratory Copy Pink: Sampler

Location IR10MW59A should be IR10MW74A. Other information on this page is correct.

CHAIN OF CUSTODY RECORD

APPL, Inc.
4203 W. Swift
Fresno, CA 93722

Phone: (559) 275 2175

Fax: (559) 275-4422

C.O.C. № 15657

Report to: (PLEASE PRINT)		Invoice to: (PLEASE PRINT)	
Company Name: Kleinfelder	Phone:	Company Name: Kleinfelder	Phone:
Address:	Fax:	Address:	Fax:
Attn:		Attn:	

Project Name/Number	Sampler (Print)	Purchase Order Number	Sampler (Signature)
Hunter's Point / 41330	[illegible]	Parcel B	[illegible]

Analysis Requested/Method Number

Sample Identification		Location	Date Collected	Time Collected	Matrix	Number of Containers	VOCs-Clp	VOCs-non Clp	TPHe 8015B	TPHp 8015B	TSS 160.2	Metals 6010B	Hex Chrom 7196A					Comments
0414H015	B	1R06MW45A	3/30/04	0930	L	11	X		X	X	X	X	X					
1R06TB006	—	1R06	3/30/04	—	L	3	X	X		X								
0414M016	B	1R07MW28A	3/30/04	0935	L	6	X			X								
0414T006	B	UT03MW11A	3/30/04	0938	L	6	X			X								
UT03EB009	B	UT03MW11A	3/30/04	1008	L	6	X			X								
0414H016	B	1R10MW59A	3/30/04	1120	L	3	X											
1R10EB010	B	1R10MW59A	3/30/04	1145	L	3	X											
0414H017	B	1R10MW75A	3/30/04	1340	L	3		X										non Clp well
0414M017	B	1R10MW33A	3/30/04	1215	L	9	X											includes MS/MSD
1R10EB011	B	1R10MW33A	3/30/04	1215	L	3	X											

Date Shipped:
Carrier:
Waybill No.:
Comments:

Shuttle Temperature: 3°

Turnaround Requested: MUST CHECK ONE
☒ Standard (2-3 week) ☐ One week ☐ 24-48 hour

Sample Disposal:
☐ Return to client ☐ Disposal by Lab (30-day retention)

Relinquished by sampler:	Date	Time	Received by:	Relinquished by:	Date	Time	Received by:
[illegible]	3/30/04	1400	Patricia Renton				
Relinquished by:	**Date**	**Time**	**Received by:**	**Relinquished by:**	**Date**	**Time**	**Received at lab by:**
Patricia Renton	3/30/04	1515			3/31/04	0800	[illegible]

White: Return to client with report Yellow: Laboratory Copy Pink: Sampler

CHAIN OF CUSTODY RECORD

APPL, Inc.
4203 W. Swift
Fresno, CA 93722

Phone: (559) 275 2175

Fax: (559) 275-4422

c.o.c. № 15658

PLEASE PRINT

Report to:
Company Name: Kleinfelder
Address:
Attn:
Phone:
Fax:

PLEASE PRINT

Invoice to:
Company Name: Kleinfelder
Address:
Attn:
Phone:
Fax:

Project Name/Number: Hunter's Point/41330
Purchase Order Number: Parcel B
Sampler (Print): Pete Holland
Sampler (Signature):

Date Shipped:
Carrier:
Waybill No.:
Comments:

Analysis Requested/Method Number

Sample Identification		Location	Date Collected	Time Collected	Matrix	Number of Containers	Metals 6010B	HexCrVOM 7196A	TSS 160.2	SVOCs 8270C	Pest. 8081	PCBs 8082	TPHe 8015					
0414M016	B	1R07MW28A	3/30/04	0935	L	8	X	X	X	X	X	X	X					
0414T006	B	UT03MW11A	3/30/04	0938	L	3	X	X	X				X					
~~0414T006~~		~~UT03MW11A~~	~~3/30/04~~	~~1008~~	~~L~~	~~1~~			X									per Sarah per phone TA 3/31/04
UT03EB009	B	UT03MW11A	3/30/04	1008	L	4	X	X	X				X					

Shuttle Temperature: 4°

Turnaround Requested: MUST CHECK ONE
☒ Standard (2-3 week) ☐ One week ☐ 24-48 hour

Sample Disposal:
☐ Return to client ☐ Disposal by Lab (30-day retention)

Relinquished by sampler	Date	Time	Received by:	Relinquished by:	Date	Time	Received by:
Pete Holland	3/30/04	1400	Patricia Renton				
Relinquished by:	**Date**	**Time**	**Received by:**	**Relinquished by:**	**Date**	**Time**	**Received at lab by:**
Patricia Renton	3/30/04	1515			3/31/04	0800	

White: Return to client with report Yellow: Laboratory Copy Pink: Sampler

CHAIN OF CUSTODY RECORD

APPL, Inc.
4203 W. Swift
Fresno, CA 93722

Phone: (559) 275 2175

Fax: (559) 275-4422

C.O.C. № 15659

PLEASE PRINT

Report to:
Company Name: Klenfelder
Address:
Attn:
Phone:
Fax:

PLEASE PRINT

Invoice to:
Company Name: Kleinfelder
Address:
Attn:
Phone:
Fax:

Project Name/Number: Hunter's Point/41330
Purchase Order Number: Parcel B
Sampler (Print): [illegible]
Sampler (Signature): [illegible]

Date Shipped:
Carrier:
Waybill No.:
Comments:

Analysis Requested/Method Number: SVOCs 8270C

Sample Identification	Location	Date Collected	Time Collected	Matrix	Number of Containers	SVOCs 8270C											
0414M017 B	1R10MW33A	3/30/04	1215	L	4	X											MS/MSD analyze for 1,4-Dioxane
1R1DEB011 B	1R10MW33A	3/30/04	1215	L	1	X		add per Sarah per phone 3/31/04									

Shuttle Temperature: 3°

Turnaround Requested: MUST CHECK ONE
☐ Standard (2-3 week) ☐ One week ☐ 24-48 hour

Sample Disposal:
☐ Return to client ☐ Disposal by Lab (30-day retention)

Relinquished by:	Date	Time	Received by:	Relinquished by:	Date	Time	Received by:
[illegible]	3-30-04	1430	Patricia Renton				
Patricia Renton	3-30-04	1515			3/31/04	0800	[illegible]

Received at lab by: [illegible]

White: Return to client with report Yellow: Laboratory Copy Pink: Sampler

APPL, Inc.
4203 W. Swift
Fresno, CA 93722

Phone: (559) 275 2175

Fax: (559) 275-4422

CHAIN OF CUSTODY RECORD

C.O.C. № 15660

Report to: (PLEASE PRINT)		Invoice to: (PLEASE PRINT)	
Company Name: Kleinfelder	Phone:	Company Name: Kleinfelder	Phone:
Address:	Fax:	Address:	Fax:
Attn:		Attn:	

Project Name/Number	Sampler (Print)	Date Shipped:
Hunters Point/41330	Susan Titus	Carrier:
Purchase Order Number	Sampler (Signature)	Waybill No.:
Parcel B		Comments:

Sample Identification	Location	Date Collected	Time Collected	Matrix	Number of Containers	VOCs CLP	TPH 8015B	VOCs non CLP									Comments
1R10TB007 —	1R10	3-30-04	—	L	3	X	X	X									
0414T007 B	1R10MW80A	3-30-04	1340	L	6			X									non CLP well
0414M018 B	1R25MW37A	3-30-04	1517	L	3	X											
0414T008 B	1R10MW80A	3-30-04	1352	L	3			X	add per Sarah per phone DA 3/31/04								

Shuttle Temperature: 3°

Turnaround Requested: MUST CHECK ONE
☒ Standard (2-3 week) ☐ One week ☐ 24-48 hour

Sample Disposal:
☐ Return to client ☐ Disposal by Lab (30-day retention)

Relinquished by sampler:	Date	Time	Received by:	Relinquished by:	Date	Time	Received by:
	3-30-04	1430	Patricia Renton				
Relinquished by:	**Date**	**Time**	**Received by:**	**Relinquished by:**	**Date**	**Time**	**Received at lab by:**
	3-30-04	1515			3/31/04	0800	

White: Return to client with report Yellow: Laboratory Copy Pink: Sampler

CHAIN OF CUSTODY RECORD

APPL, Inc.
4203 W. Swift
Fresno, CA 93722

Phone: (559) 275 2175
Fax: (559) 275-4422

C.O.C. № 16150

Report to: PLEASE PRINT
Company Name: Kleinfelder
Address:
Attn:
Phone:
Fax:

Invoice to: PLEASE PRINT
Company Name: Kleinfelder
Address:
Attn:
Phone:
Fax:

Project Name/Number: Hunters Point / 41330
Purchase Order Number:
Sampler (Print): Sarah Callahan / Patricia Renton
Sampler (Signature): Sarah Callahan / Patricia Renton

Date Shipped: 3/19/04
Carrier: Aerospace
Waybill No.:
Comments:

Analysis Requested/Method Number

Sample Identification	Location	Date Collected	Time Collected	Matrix	Number of Containers	Metals 6010B/7000 SW-846	VOCs 5030/8260B SW-846	SVOCs 8270C SW-846	Chlorinated Pest 8081A SW-846	PCBs 8082 SW-846	Cyanide 9010 SW-846	Sulfide 376.2 MCAWW	TRPH 8015B, mod / TPH 8015 S.G.	TSS 160.2 MCAWW	pH 4040/9045C SW-846	Chem Oxidant 410.1 MCAWW, 5220B SM20th	New ID#
DE-I-031904	DeIonized H_2O	3/19/04	1050	H_2O	19	X	X	X	X	X	X	X	X	X	X	X	IDWSW002
Trip Blank	Trip Blank/APPL	3/19/04	—	H_2O	2		X						X				IDWTB002
Temp Blank	Temp Blank/APPL	—	—	H_2O	1												

3/25/04

Shuttle Temperature:

Turnaround Requested: MUST CHECK ONE
☒ Standard (2-3 week) ☐ One week ☐ 24-48 hour

Sample Disposal:
☐ Return to client ☒ Disposal by Lab (30-day retention)

Relinquished by sampler:	Date	Time	Received by:	Relinquished by:	Date	Time	Received by:
Sarah Callahan	3/19/04	4:10pm					
Relinquished by:	**Date**	**Time**	**Received by:**	**Relinquished by:**	**Date**	**Time**	**Received at lab by:**

White: Return to client with report Yellow: Laboratory Copy Pink: Sampler

APPENDIX D

Data Validation Reports,
January to March 2004 Sampling Event

N00217.004073
HUNTERS POINT
SSIC NO. 5090.3

APPENDIX D – DATA VALIDATION REPORTS, JANUARY TO MARCH 2004 SAMPLING EVENT, IS CONTAINED IN ELECTRONIC FORMAT AND IS TOO VOLUMINOUS TO PRINT OR IMAGE

TO VIEW THE DATA, CONTACT:

DIANE C. SILVA
RECORDS MANAGEMENT SPECIALIST
SOUTHWEST DIVISION
NAVAL FACILITIES ENGINEERING COMMAND
1220 PACIFIC HIGHWAY
SAN DIEGO, CA 92132

TELEPHONE: (619) 532-3676

APPENDIX E

Field Duplicate Pair Results, January to March 2004 Sampling Event

FIELD DUPLICATE RESULTS
Seventeenth Quarterly Groundwater Report - Parcel B
Hunters Point Shipyard
San Francisco, California

Well ID	Sample Number	Sample Duplicate Number	Sample Date	Method	Analyte	Units	Original Sample Results	Lab Qual	Val Code	Duplicate Results	Lab Qual	Val Code	RPD (%)
IR07MW19A	0413M003	0413M004	3/23/2004	CLP METALS	ANTIMONY	µg/L	53.8	J	J	3.4	J	J	176
IR07MW19A	0413M003	0413M004	3/23/2004	CLP METALS	ARSENIC	µg/L	20	U		10	U		67
IR07MW19A	0413M003	0413M004	3/23/2004	CLP METALS	BARIUM	µg/L	45.6	J	J4	3.4	J	J4	172
IR07MW19A	0413M003	0413M004	3/23/2004	CLP METALS	BERYLLIUM	µg/L	3.3	J	J	5	U		41
IR07MW19A	0413M003	0413M004	3/23/2004	CLP METALS	CADMIUM	µg/L	10	U		5	U		67
IR07MW19A	0413M003	0413M004	3/23/2004	CLP METALS	CHROMIUM	µg/L	14.0	J	U2	4.9	J	J	96
IR07MW19A	0413M003	0413M004	3/23/2004	CLP METALS	COBALT	µg/L	100	U		50	U		67
IR07MW19A	0413M003	0413M004	3/23/2004	CLP METALS	COPPER	µg/L	50	U		2.9	J	U1	178
IR07MW19A	0413M003	0413M004	3/23/2004	CLP METALS	LEAD	µg/L	20	U		2.8	J	J	151
IR07MW19A	0413M003	0413M004	3/23/2004	CLP METALS	MANGANESE	µg/L	7.4	J	U2	7.0	J	J	6
IR07MW19A	0413M003	0413M004	3/23/2004	CLP METALS	NICKEL	µg/L	80	U		40	U		67
IR07MW19A	0413M003	0413M004	3/23/2004	CLP METALS	SELENIUM	µg/L	37.6	J	J	35	U		7
IR07MW19A	0413M003	0413M004	3/23/2004	CLP METALS	SILVER	µg/L	20	U		10	U		67
IR07MW19A	0413M003	0413M004	3/23/2004	CLP METALS	THALLIUM	µg/L	183		J3	25	U	UJ3	152
IR07MW19A	0413M003	0413M004	3/23/2004	CLP METALS	ZINC	µg/L	120	U		60	U		67
IR07MW19A	0413M003	0413M004	3/23/2004	CLP VOLATILES	1,1,1-TRICHLOROETHANE	µg/L	0.5	U		0.5	U		0
IR07MW19A	0413M003	0413M004	3/23/2004	CLP VOLATILES	1,1,2,2-TETRACHLOROETHANE	µg/L	0.5	U		0.5	U		0
IR07MW19A	0413M003	0413M004	3/23/2004	CLP VOLATILES	1,1,2-TRICHLOROETHANE	µg/L	0.5	U		0.5	U		0
IR07MW19A	0413M003	0413M004	3/23/2004	CLP VOLATILES	1,1-DICHLOROETHANE	µg/L	0.5	U		0.5	U		0
IR07MW19A	0413M003	0413M004	3/23/2004	CLP VOLATILES	1,1-DICHLOROETHENE	µg/L	0.5	U		0.5	U		0
IR07MW19A	0413M003	0413M004	3/23/2004	CLP VOLATILES	1,2,4-TRICHLOROBENZENE	µg/L	0.5	U		0.5	U		0
IR07MW19A	0413M003	0413M004	3/23/2004	CLP VOLATILES	1,2-DIBROMO-3-CHLOROPROPANE	µg/L	1	U		1	U		0
IR07MW19A	0413M003	0413M004	3/23/2004	CLP VOLATILES	1,2-DICHLOROBENZENE	µg/L	0.5	U		0.5	U		0
IR07MW19A	0413M003	0413M004	3/23/2004	CLP VOLATILES	1,2-DICHLOROETHANE	µg/L	0.5	U		0.5	U		0
IR07MW19A	0413M003	0413M004	3/23/2004	CLP VOLATILES	1,2-DICHLOROPROPANE	µg/L	0.5	U		0.5	U		0
IR07MW19A	0413M003	0413M004	3/23/2004	CLP VOLATILES	1,3-DICHLOROBENZENE	µg/L	0.5	U		0.5	U		0
IR07MW19A	0413M003	0413M004	3/23/2004	CLP VOLATILES	1,4-DICHLOROBENZENE	µg/L	0.5	U		0.5	U		0
IR07MW19A	0413M003	0413M004	3/23/2004	CLP VOLATILES	BENZENE	µg/L	0.5	U		0.5	U		0
IR07MW19A	0413M003	0413M004	3/23/2004	CLP VOLATILES	CARBON TETRACHLORIDE	µg/L	0.5	U		0.5	U		0
IR07MW19A	0413M003	0413M004	3/23/2004	CLP VOLATILES	CHLOROBENZENE	µg/L	0.5	U		0.5	U		0
IR07MW19A	0413M003	0413M004	3/23/2004	CLP VOLATILES	CHLOROFORM	µg/L	0.5	U		0.80			46
IR07MW19A	0413M003	0413M004	3/23/2004	CLP VOLATILES	cis-1,2-DICHLOROETHENE	µg/L	0.5	U		0.5	U		0
IR07MW19A	0413M003	0413M004	3/23/2004	CLP VOLATILES	cis-1,3-DICHLOROPROPENE	µg/L	0.5	U		0.5	U		0
IR07MW19A	0413M003	0413M004	3/23/2004	CLP VOLATILES	ETHYL BENZENE	µg/L	0.5	U		0.5	U		0
IR07MW19A	0413M003	0413M004	3/23/2004	CLP VOLATILES	METHYLENE CHLORIDE	µg/L	0.5	U		0.5	U		0
IR07MW19A	0413M003	0413M004	3/23/2004	CLP VOLATILES	TETRACHLOROETHENE	µg/L	0.5	U		0.5	U		0
IR07MW19A	0413M003	0413M004	3/23/2004	CLP VOLATILES	trans-1,2-DICHLOROETHENE	µg/L	0.5	U		0.5	U		0
IR07MW19A	0413M003	0413M004	3/23/2004	CLP VOLATILES	TRICHLOROETHENE	µg/L	0.5	U		0.5	U		0
IR07MW19A	0413M003	0413M004	3/23/2004	CLP VOLATILES	VINYL CHLORIDE	µg/L	0.5	U		0.5	U		0
IR07MW19A	0413M003	0413M004	3/23/2004	EPA 160.2	TOTAL SUSPENDED SOLIDS	mg/L	10.0	U		10.0	U		0
IR07MW19A	0413M003	0413M004	3/23/2004	EPA 7196A	HEXAVALENT CHROMIUM	mg/L	0.02	U		0.02	U		0
IR07MW19A	0413M003	0413M004	3/23/2004	EPA 7470A	MERCURY	µg/L	0.2	U		0.100	J	U1	67
IR07MW20A1	0413M006	0413M007	3/24/2004	CLP METALS	ANTIMONY	µg/L	51.4	J	J	55.9	J	J	8
IR07MW20A1	0413M006	0413M007	3/24/2004	CLP METALS	ANTIMONY	µg/L	51.4	J	J	55.9	J	J	8
IR07MW20A1	0413M006	0413M007	3/24/2004	CLP METALS	ARSENIC	µg/L	20	U		20	U		0
IR07MW20A1	0413M006	0413M007	3/24/2004	CLP METALS	BARIUM	µg/L	31.3	J	J	37.0	J	J	17
IR07MW20A1	0413M006	0413M007	3/24/2004	CLP METALS	BERYLLIUM	µg/L	3.9	J	J	3.6	J	J	8
IR07MW20A1	0413M006	0413M007	3/24/2004	CLP METALS	CADMIUM	µg/L	10	U		10	U		0
IR07MW20A1	0413M006	0413M007	3/24/2004	CLP METALS	CHROMIUM	µg/L	19.1	J	J	18.5	J	J	3
IR07MW20A1	0413M006	0413M007	3/24/2004	CLP METALS	COBALT	µg/L	100	U		100	U		0
IR07MW20A1	0413M006	0413M007	3/24/2004	CLP METALS	COPPER	µg/L	50	U		50	U		0
IR07MW20A1	0413M006	0413M007	3/24/2004	CLP METALS	LEAD	µg/L	20	U		20	U		0

FIELD DUPLICATE RESULTS
Seventeenth Quarterly Groundwater Report - Parcel B
Hunters Point Shipyard
San Francisco, California

Well ID	Sample Number	Sample Duplicate Number	Sample Date	Method	Analyte	Units	Original Sample Results	Lab Qual	Val Code	Duplicate Results	Lab Qual	Val Code	RPD (%)
IR07MW20A1	0413M006	0413M007	3/24/2004	CLP METALS	MANGANESE	µg/L	11.3	J	J	9.9	J	J	13
IR07MW20A1	0413M006	0413M007	3/24/2004	CLP METALS	NICKEL	µg/L	80	U		80	U		0
IR07MW20A1	0413M006	0413M007	3/24/2004	CLP METALS	SELENIUM	µg/L	42.8	J	J	44.3	J	J	3
IR07MW20A1	0413M006	0413M007	3/24/2004	CLP METALS	SILVER	µg/L	20	U		20	U		0
IR07MW20A1	0413M006	0413M007	3/24/2004	CLP METALS	THALLIUM	µg/L	208		U1J3	202		U1J3	3
IR07MW20A1	0413M006	0413M007	3/24/2004	CLP METALS	ZINC	µg/L	120	U		120	U		0
IR07MW20A1	0413M006	0413M007	3/24/2004	CLP VOLATILES	1,1,1-TRICHLOROETHANE	µg/L	0.5	U		0.5	U		0
IR07MW20A1	0413M006	0413M007	3/24/2004	CLP VOLATILES	1,1,2,2-TETRACHLOROETHANE	µg/L	0.5	U		0.5	U		0
IR07MW20A1	0413M006	0413M007	3/24/2004	CLP VOLATILES	1,1,2-TRICHLOROETHANE	µg/L	0.5	U		0.5	U		0
IR07MW20A1	0413M006	0413M007	3/24/2004	CLP VOLATILES	1,1-DICHLOROETHANE	µg/L	0.5	U		0.5	U		0
IR07MW20A1	0413M006	0413M007	3/24/2004	CLP VOLATILES	1,1-DICHLOROETHENE	µg/L	0.5	U		0.5	U		0
IR07MW20A1	0413M006	0413M007	3/24/2004	CLP VOLATILES	1,2,4-TRICHLOROBENZENE	µg/L	0.5	U		0.5	U		0
IR07MW20A1	0413M006	0413M007	3/24/2004	CLP VOLATILES	1,2-DIBROMO-3-CHLOROPROPANE	µg/L	1	U	UJ7	1	U	UJ7	0
IR07MW20A1	0413M006	0413M007	3/24/2004	CLP VOLATILES	1,2-DICHLOROBENZENE	µg/L	0.5	U		0.5	U		0
IR07MW20A1	0413M006	0413M007	3/24/2004	CLP VOLATILES	1,2-DICHLOROETHANE	µg/L	0.5		U2	0.14	J		113
IR07MW20A1	0413M006	0413M007	3/24/2004	CLP VOLATILES	1,2-DICHLOROPROPANE	µg/L	0.5	U		0.5	U		0
IR07MW20A1	0413M006	0413M007	3/24/2004	CLP VOLATILES	1,3-DICHLOROBENZENE	µg/L	0.5	U		0.5	U		0
IR07MW20A1	0413M006	0413M007	3/24/2004	CLP VOLATILES	1,4-DICHLOROBENZENE	µg/L	0.5	U		0.5	U		0
IR07MW20A1	0413M006	0413M007	3/24/2004	CLP VOLATILES	BENZENE	µg/L	0.5	U		0.5	U		0
IR07MW20A1	0413M006	0413M007	3/24/2004	CLP VOLATILES	CARBON TETRACHLORIDE	µg/L	0.5	U		0.5	U		0
IR07MW20A1	0413M006	0413M007	3/24/2004	CLP VOLATILES	CHLOROBENZENE	µg/L	0.5	U		0.5	U		0
IR07MW20A1	0413M006	0413M007	3/24/2004	CLP VOLATILES	CHLOROFORM	µg/L	0.5	U		0.5	U		0
IR07MW20A1	0413M006	0413M007	3/24/2004	CLP VOLATILES	cis-1,2-DICHLOROETHENE	µg/L	0.5	U		0.5	U		0
IR07MW20A1	0413M006	0413M007	3/24/2004	CLP VOLATILES	cis-1,3-DICHLOROPROPENE	µg/L	0.5	U		0.5	U		0
IR07MW20A1	0413M006	0413M007	3/24/2004	CLP VOLATILES	ETHYL BENZENE	µg/L	0.5	U		0.5	U		0
IR07MW20A1	0413M006	0413M007	3/24/2004	CLP VOLATILES	METHYLENE CHLORIDE	µg/L	0.5	U		0.5	U		0
IR07MW20A1	0413M006	0413M007	3/24/2004	CLP VOLATILES	TETRACHLOROETHENE	µg/L	0.5	U		0.5	U		0
IR07MW20A1	0413M006	0413M007	3/24/2004	CLP VOLATILES	trans-1,2-DICHLOROETHENE	µg/L	0.5	U		0.5	U		0
IR07MW20A1	0413M006	0413M007	3/24/2004	CLP VOLATILES	TRICHLOROETHENE	µg/L	0.5	U		0.5	U		0
IR07MW20A1	0413M006	0413M007	3/24/2004	CLP VOLATILES	VINYL CHLORIDE	µg/L	0.5	U		0.5	U		0
IR07MW20A1	0413M006	0413M007	3/24/2004	EPA 160.2	TOTAL SUSPENDED SOLIDS	mg/L	10.0	U		10.0	U		0
IR07MW20A1	0413M006	0413M007	3/24/2004	EPA 7196A	HEXAVALENT CHROMIUM	mg/L	0.02	U		0.02	U		0
IR07MW20A1	0413M006	0413M007	3/24/2004	EPA 7470A	MERCURY	µg/L	0.2	U		0.2	U		0
IR10MW80A	0414T007	0414T008	3/30/2004	EPA 8260B	1,1,1-TRICHLOROETHANE	µg/L	0.5	U		0.5	U		0
IR10MW80A	0414T007	0414T008	3/30/2004	EPA 8260B	1,1,2,2-TETRACHLOROETHANE	µg/L	0.5	U		0.5	U		0
IR10MW80A	0414T007	0414T008	3/30/2004	EPA 8260B	1,1,2-TRICHLOROETHANE	µg/L	0.5	U		0.5	U		0
IR10MW80A	0414T007	0414T008	3/30/2004	EPA 8260B	1,1-DICHLOROETHANE	µg/L	1	U		1	U		0
IR10MW80A	0414T007	0414T008	3/30/2004	EPA 8260B	1,1-DICHLOROETHENE	µg/L	0.5	U		0.5	U		0
IR10MW80A	0414T007	0414T008	3/30/2004	EPA 8260B	1,2,3-TRICHLOROPROPANE	µg/L	1	U		1	U		0
IR10MW80A	0414T007	0414T008	3/30/2004	EPA 8260B	1,2,4-TRICHLOROBENZENE	µg/L	0.5	U		0.5	U		0
IR10MW80A	0414T007	0414T008	3/30/2004	EPA 8260B	1,2-DIBROMO-3-CHLOROPROPANE	µg/L	2	U		2	U		0
IR10MW80A	0414T007	0414T008	3/30/2004	EPA 8260B	1,2-DICHLOROBENZENE	µg/L	0.5	U		0.5	U		0
IR10MW80A	0414T007	0414T008	3/30/2004	EPA 8260B	1,2-DICHLOROETHANE	µg/L	0.5	U		0.5	U		0
IR10MW80A	0414T007	0414T008	3/30/2004	EPA 8260B	1,2-DICHLOROPROPANE	µg/L	0.5	U		0.5	U		0
IR10MW80A	0414T007	0414T008	3/30/2004	EPA 8260B	1,3-DICHLOROBENZENE	µg/L	0.5	U		0.5	U		0
IR10MW80A	0414T007	0414T008	3/30/2004	EPA 8260B	1,4-DICHLOROBENZENE	µg/L	0.5	U		0.5	U		0
IR10MW80A	0414T007	0414T008	3/30/2004	EPA 8260B	BENZENE	µg/L	0.5	U		0.5	U		0
IR10MW80A	0414T007	0414T008	3/30/2004	EPA 8260B	CARBON TETRACHLORIDE	µg/L	0.5	U		0.5	U		0
IR10MW80A	0414T007	0414T008	3/30/2004	EPA 8260B	CHLOROBENZENE	µg/L	0.5	U		0.5	U		0
IR10MW80A	0414T007	0414T008	3/30/2004	EPA 8260B	CHLOROFORM	µg/L	0.5	U		0.5	U		0
IR10MW80A	0414T007	0414T008	3/30/2004	EPA 8260B	cis-1,2-DICHLOROETHENE	µg/L	0.5	U		0.5	U		0
IR10MW80A	0414T007	0414T008	3/30/2004	EPA 8260B	cis-1,3-DICHLOROPROPENE	µg/L	0.5	U		0.5	U		0

FIELD DUPLICATE RESULTS
Seventeenth Quarterly Groundwater Report - Parcel B
Hunters Point Shipyard
San Francisco, California

Well ID	Sample Number	Sample Duplicate Number	Sample Date	Method	Analyte	Units	Original Sample Results	Lab Qual	Val Code	Duplicate Results	Lab Qual	Val Code	RPD (%)
IR10MW80A	0414T007	0414T008	3/30/2004	EPA 8260B	ETHYL BENZENE	µg/L	0.5	U		0.5	U		0
IR10MW80A	0414T007	0414T008	3/30/2004	EPA 8260B	METHYLENE CHLORIDE	µg/L	5	U		5	U		0
IR10MW80A	0414T007	0414T008	3/30/2004	EPA 8260B	TETRACHLOROETHENE	µg/L	0.5	U		0.5	U		0
IR10MW80A	0414T007	0414T008	3/30/2004	EPA 8260B	trans-1,2-DICHLOROETHENE	µg/L	0.5	U		0.5	U		0
IR10MW80A	0414T007	0414T008	3/30/2004	EPA 8260B	TRICHLOROETHENE	µg/L	0.5	U		0.5	U		0
IR10MW80A	0414T007	0414T008	3/30/2004	EPA 8260B	VINYL CHLORIDE	µg/L	0.5	U		0.5	U		0
IR26MW41A	0414M013	0414M014	3/29/2004	CLP METALS	ARSENIC	µg/L	10	U	R2	10	U	R2	0
IR26MW41A	0414M013	0414M014	3/29/2004	CLP METALS	CHROMIUM	µg/L	10	U		10	U		0
IR26MW41A	0414M013	0414M014	3/29/2004	CLP METALS	COPPER	µg/L	4.4	J	U1J3	4.7	J	U1J3	7
IR26MW41A	0414M013	0414M014	3/29/2004	CLP METALS	LEAD	µg/L	10	U		10	U		0
IR26MW41A	0414M013	0414M014	3/29/2004	CLP METALS	MANGANESE	µg/L	245			248			1
IR26MW41A	0414M013	0414M014	3/29/2004	CLP METALS	ZINC	µg/L	60	U	UJ3	60	U	UJ3	0
IR26MW41A	0414M013	0414M014	3/29/2004	CLP VOLATILES	1,1,1-TRICHLOROETHANE	µg/L	0.5	U		0.5	U		0
IR26MW41A	0414M013	0414M014	3/29/2004	CLP VOLATILES	1,1,2,2-TETRACHLOROETHANE	µg/L	0.5	U		0.5	U		0
IR26MW41A	0414M013	0414M014	3/29/2004	CLP VOLATILES	1,1,2-TRICHLOROETHANE	µg/L	0.5	U		0.5	U		0
IR26MW41A	0414M013	0414M014	3/29/2004	CLP VOLATILES	1,1-DICHLOROETHANE	µg/L	0.5	U		0.5	U		0
IR26MW41A	0414M013	0414M014	3/29/2004	CLP VOLATILES	1,1-DICHLOROETHENE	µg/L	0.5	U		0.5	U		0
IR26MW41A	0414M013	0414M014	3/29/2004	CLP VOLATILES	1,2,4-TRICHLOROBENZENE	µg/L	0.5	U		0.5	U		0
IR26MW41A	0414M013	0414M014	3/29/2004	CLP VOLATILES	1,2-DIBROMO-3-CHLOROPROPANE	µg/L	1	U		1	U		0
IR26MW41A	0414M013	0414M014	3/29/2004	CLP VOLATILES	1,2-DICHLOROBENZENE	µg/L	0.5	U		0.5	U		0
IR26MW41A	0414M013	0414M014	3/29/2004	CLP VOLATILES	1,2-DICHLOROETHANE	µg/L	0.5	U		0.5	U		0
IR26MW41A	0414M013	0414M014	3/29/2004	CLP VOLATILES	1,2-DICHLOROPROPANE	µg/L	0.5	U		0.5	U		0
IR26MW41A	0414M013	0414M014	3/29/2004	CLP VOLATILES	1,3-DICHLOROBENZENE	µg/L	0.5	U		0.5	U		0
IR26MW41A	0414M013	0414M014	3/29/2004	CLP VOLATILES	1,4-DICHLOROBENZENE	µg/L	0.5	U		0.5	U		0
IR26MW41A	0414M013	0414M014	3/29/2004	CLP VOLATILES	BENZENE	µg/L	0.5	U		0.5	U		0
IR26MW41A	0414M013	0414M014	3/29/2004	CLP VOLATILES	CARBON TETRACHLORIDE	µg/L	0.5	U		0.5	U		0
IR26MW41A	0414M013	0414M014	3/29/2004	CLP VOLATILES	CHLOROBENZENE	µg/L	0.5	U		0.5	U		0
IR26MW41A	0414M013	0414M014	3/29/2004	CLP VOLATILES	CHLOROFORM	µg/L	0.5	U		0.5	U		0
IR26MW41A	0414M013	0414M014	3/29/2004	CLP VOLATILES	cis-1,2-DICHLOROETHENE	µg/L	0.29	J	J	0.29	J	J	0
IR26MW41A	0414M013	0414M014	3/29/2004	CLP VOLATILES	cis-1,3-DICHLOROPROPENE	µg/L	0.5	U		0.5	U		0
IR26MW41A	0414M013	0414M014	3/29/2004	CLP VOLATILES	ETHYL BENZENE	µg/L	0.5	U		0.5	U		0
IR26MW41A	0414M013	0414M014	3/29/2004	CLP VOLATILES	METHYLENE CHLORIDE	µg/L	0.5	U		0.5	U		0
IR26MW41A	0414M013	0414M014	3/29/2004	CLP VOLATILES	TETRACHLOROETHENE	µg/L	0.5	U		0.5	U		0
IR26MW41A	0414M013	0414M014	3/29/2004	CLP VOLATILES	trans-1,2-DICHLOROETHENE	µg/L	0.5	U		0.5	U		0
IR26MW41A	0414M013	0414M014	3/29/2004	CLP VOLATILES	TRICHLOROETHENE	µg/L	0.5	U		0.5	U		0
IR26MW41A	0414M013	0414M014	3/29/2004	CLP VOLATILES	VINYL CHLORIDE	µg/L	0.5	U		0.5	U		0
IR26MW41A	0414M013	0414M014	3/29/2004	EPA 160.2	TOTAL SUSPENDED SOLIDS	mg/L	10.0	U		10.0	U		0
IR26MW41A	0414M013	0414M014	3/29/2004	EPA 7196A	HEXAVALENT CHROMIUM	mg/L	0.02	U		0.02	U		0
IR26MW41A	0414M013	0414M014	3/29/2004	EPA 7470A	MERCURY	µg/L	0.2	U	U1J3	0.2	U		0
IR26MW46A	0414H011	0414H012	3/29/2004	CLP METALS	ARSENIC	µg/L	10	U	R2	14.7		J39	38
IR26MW46A	0414H011	0414H012	3/29/2004	CLP METALS	CHROMIUM	µg/L	6.9	J	J	6.1	J	J	12
IR26MW46A	0414H011	0414H012	3/29/2004	CLP METALS	COPPER	µg/L	2.7	J	U1J3	25	U	UJ39	161
IR26MW46A	0414H011	0414H012	3/29/2004	CLP METALS	LEAD	µg/L	10	U		10	U	UJ9	0
IR26MW46A	0414H011	0414H012	3/29/2004	CLP METALS	MANGANESE	µg/L	3120			2960			5
IR26MW46A	0414H011	0414H012	3/29/2004	CLP METALS	ZINC	µg/L	60	U	UJ3	60	U	UJ3	0
IR26MW46A	0414H011	0414H012	3/29/2004	CLP PESTICIDES	alpha-CHLORDANE	µg/L	0.01	U		0.01	U		0
IR26MW46A	0414H011	0414H012	3/29/2004	CLP PESTICIDES	AROCLOR-1260	µg/L	0.2	U		0.2	U		0
IR26MW46A	0414H011	0414H012	3/29/2004	CLP SEMIVOLATILE	BENZO(a)PYRENE	µg/L	10	U		10	U		0
IR26MW46A	0414H011	0414H012	3/29/2004	CLP SEMIVOLATILE	CHRYSENE	µg/L	10	U		10	U		0
IR26MW46A	0414H011	0414H012	3/29/2004	EPA 160.2	TOTAL SUSPENDED SOLIDS	mg/L	10.0	U		17			52
IR26MW46A	0414H011	0414H012	3/29/2004	EPA 7196A	HEXAVALENT CHROMIUM	mg/L	0.02	U		0.006	J	J	108
IR26MW46A	0414H011	0414H012	3/29/2004	EPA 7470A	MERCURY	µg/L	0.2	U		0.2	U		0

FIELD DUPLICATE RESULTS
Seventeenth Quarterly Groundwater Report - Parcel B
Hunters Point Shipyard
San Francisco, California

Well ID	Sample Number	Sample Duplicate Number	Sample Date	Method	Analyte	Units	Original Sample Results	Lab Qual	Val Code	Duplicate Results	Lab Qual	Val Code	RPD (%)
IR26MW47A	0414T003	0414T004	3/29/2004	CLP METALS	ARSENIC	µg/L	50	U	R2	50	U	R2	0
IR26MW47A	0414T003	0414T004	3/29/2004	CLP METALS	CHROMIUM	µg/L	50	U		50	U		0
IR26MW47A	0414T003	0414T004	3/29/2004	CLP METALS	COPPER	µg/L	130	U	UJ3	130	U	UJ3	0
IR26MW47A	0414T003	0414T004	3/29/2004	CLP METALS	LEAD	µg/L	50	U		50	U		0
IR26MW47A	0414T003	0414T004	3/29/2004	CLP METALS	MANGANESE	µg/L	75	U		75	U		0
IR26MW47A	0414T003	0414T004	3/29/2004	CLP METALS	ZINC	µg/L	300	U	UJ3	300	U	UJ3	0
IR26MW47A	0414T003	0414T004	3/29/2004	CLP PESTICIDES	alpha-CHLORDANE	µg/L	0.01	U		0.01	U		0
IR26MW47A	0414T003	0414T004	3/29/2004	CLP PESTICIDES	AROCLOR-1260	µg/L	0.2	U		0.2	U		0
IR26MW47A	0414T003	0414T004	3/29/2004	CLP SEMIVOLATILE	BENZO(a)PYRENE	µg/L	10	U		10	U		0
IR26MW47A	0414T003	0414T004	3/29/2004	CLP SEMIVOLATILE	CHRYSENE	µg/L	10	U		10	U		0
IR26MW47A	0414T003	0414T004	3/29/2004	EPA 160.2	TOTAL SUSPENDED SOLIDS	mg/L	10.0	U		10.0	U		0
IR26MW47A	0414T003	0414T004	3/29/2004	EPA 7196A	HEXAVALENT CHROMIUM	mg/L	0.011	J	J	0.007	J	J	44
IR26MW47A	0414T003	0414T004	3/29/2004	EPA 7470A	MERCURY	µg/L	1.4			1.5			7

APPENDIX F

Monitoring Well Installation Report and Logs of Borings For March 2004

WELL INSTALLATION DOCUMENTATION BASEWIDE GROUNDWATER MONITORING PROGRAM HUNTERS POINT SHIPYARD SAN FRANCISCO, CALIFORNIA

Navy Contract:
N68711-00-D-0004
Delivery Order 0074

Prepared by:
BROWN & CALDWELL
KLEINFELDER, INC.

Under Contract With:
CDM
CDM Federal Programs Corporation
3760 Convoy Street, Suite 210
San Diego, California 92111
858-268-3383

July 8, 2004

This page left blank intentionally

A document prepared for:

Naval Facilities Engineering Command
Southwest Division
1220 Pacific Highway
San Diego, California 92132

WELL INSTALLATION DOCUMENTATION
BASEWIDE GROUNDWATER MONITORING PROGRAM
HUNTERS POINT SHIPYARD
SAN FRANCISCO, CALIFORNIA

Navy Contract No. N68711-00-D-0004
Delivery Order No. 0074

Kleinfelder Job No. 41330-2.09

Prepared by:

for

Chris Skelton, RG
Project Scientist

Reviewed By:

Jacques P. Lord, CEG #2232
Project Scientist

Prepared by:
BROWN & CALDWELL
KLEINFELDER, INC.
5015 Shoreham Place
San Diego, California 92122
858-320-2000

Under Contract With:
CDM Federal Programs Corporation
9444 Farnham Street, Suite 210
San Diego, California 92123
858-268-3383

July 8, 2004

This page left blank intentionally

TABLE OF CONTENTS

Section		Page
ACRONYMS/ABBREVIATIONS		vii
1.0	INTRODUCTION	1-1
2.0	UTILITY CLEARANCE	2-1
3.0	WELL INSTALLATION	3-1
4.0	PARCEL B	4-1
5.0	WELL DEVELOPMENT	5-1
6.0	WELL SURVEYING	6-1

This page left blank intentionally

ACRONYMS/ABBREVIATIONS

APPL	Agriculture & Priority Pollutants Laboratories, Inc.
bgs	below ground surface
CDM	CDM Federal Programs Corporation
HPS	Hunters Point Shipyard
NGS	National Geodetic Survey
PVC	Polyvinyl Chloride

This page left blank intentionally

1.0 INTRODUCTION

The purpose of this well installation documentation is to provide a record of well installation activities at Parcel B during basewide groundwater monitoring activities associated with Delivery Order No. 0074 of the Navy Contract No. N68711-00-D-0004 at the Hunters Point Shipyard (HPS) in San Francisco, California.

This page left blank intentionally

2.0 UTILITY CLEARANCE

Prior to groundwater monitoring well installation, potential underground utilities were located and marked during a geophysical survey. The survey was performed by Norcal Geophysical Consultants, Inc. to locate detectable underground utilities. Utility clearance was performed on February 26, 2004 and March 09, 2004. Techniques used included ground-penetrating radar, metal detection, and electromagnetic detection.

This page left blank intentionally

3.0 WELL INSTALLATION

A total of five groundwater-monitoring wells were installed at the HPS in March 2004 as part of the groundwater-monitoring program for Parcel B. Boreholes were hand-augered to depths ranging between 4 and 5 feet below ground surface (bgs) prior to commencing the drilling. The drilling technologies used were sonic and air rotary, depending on the subsurface conditions encountered. Soil samples were not collected from boreholes at Parcel B.

All of the wells installed were constructed of 4-inch diameter Schedule 40 polyvinyl chloride (PVC) casing and screened with 0.020-inch slot size PVC screen. Number 2/16 sand was used as the filter pack material. Hydrated medium bentonite chips were used above the filter pack to provide a seal for each well. The conductor casing was vibrated after filter pack placement to allow the filter pack to settle/compact. The filter pack depth was verified prior to the placement of the bentonite chip seal. The bentonite chip seal depth was also verified prior to the placement of the bentonite/cement mixture. The remainder of the annular space in each well was sealed with either bentonite chips or 3-4% bentonite/cement mixture, depending on the depth of the well (i.e., shallow wells were sealed to ground surface with bentonite chips). The specific well construction details are described in the sections below. All soil cuttings were placed in a hopper bin and were moved to a designated investigation-derived waste storage area on-site pending appropriate disposal. All drilling fluids (water) and groundwater encountered were pumped off into an on-site aboveground storage tank pending appropriate disposal.

This page left blank intentionally

4.0 PARCEL B

The five Parcel B wells were drilled and installed between March 2 and 3, 2004. The specific construction details for each well are described below:

- **IR07MW26A** – This borehole was hand-augered and drilled on March 2, 2004. The well was installed on March 3, 2004. The borehole was continuously cored to 15.5 feet bgs using sonic drilling technology. No soil samples were submitted for chemical analysis. The well was set at 15.5 feet bgs (including a 0.5-foot sump/end cap) and screened between approximately 5 and 15 feet bgs with 0.020-inch slot screen. The filter pack (#2/16 sand) extends one foot above the screened interval, between 4 and 15.5 feet bgs. The remainder of the annular space was sealed with hydrated medium bentonite chips. The well was completed with an above-grade locking stovepipe well box.

- **IR07MWS-4** – This borehole was hand-augered and drilled on March 2, 2004. The well was installed on March 3, 2004. The borehole was continuously cored to 16.5 feet bgs using sonic drilling technology. No soil samples were submitted for chemical analysis. The well was set at 16.5 feet bgs (including a 0.5 foot sump/end cap) and screened between approximately 6 and 16 feet bgs with 0.020-inch slot screen. The filter pack (#2/16 sand) extends one foot above the screened interval, between 5 and 16.5 feet bgs. The remainder of the annular space was sealed with hydrated medium bentonite chips. The well was completed with an above-grade locking stovepipe well box.

- **IR07MW25A** – This borehole was hand-augered, drilled, and the well installed on March 3, 2004. The borehole was continuously cored to 18.5 feet bgs using sonic drilling technology. No soil samples were submitted for chemical analysis. The well was set at 18.5 feet bgs (including a 0.5 foot sump/end cap) and screened between approximately 8 and 18 feet bgs with 0.020-inch slot screen. The filter pack (#2/16 sand) extends one foot above the screened interval, between 7 and 18.5 feet bgs. The remainder of the annular space was sealed with hydrated medium bentonite chips. The well was completed with an above-grade locking stovepipe well box.

- **IR07MW24A** – This borehole was hand-augered, drilled, and the well installed on March 3, 2004. The borehole was continuously cored to 15.5 feet bgs using sonic drilling technology. No soil samples were submitted for chemical analysis. The well was set at 15.5 feet bgs (including a 0.5 foot sump/end cap) and screened between approximately 5 and 15 feet bgs with 0.020-inch slot screen. The filter pack (#2/16 sand) extends one foot above the screened

interval, between 4 and 15.5 feet bgs. The remainder of the annular space was sealed with hydrated medium bentonite chips. The well was completed with an above-grade locking stovepipe well box.

- **IR07MW21A1** – This borehole was hand-augered, drilled, and the well installed on March 3, 2004. The borehole was continuously cored to 16.5 feet bgs using sonic drilling technology. No soil samples were submitted for chemical analysis. The well was set at 16.5 feet bgs (including a 0.5 foot sump/end cap) and screened between approximately 6 and 16 feet bgs with 0.020-inch slot screen. The filter pack (#2/16 sand) extends one foot above the screened interval, between 5 and 16.5 feet bgs. The remainder of the annular space was sealed with hydrated medium bentonite chips. The well was completed with an above-grade locking stovepipe well box.

5.0 WELL DEVELOPMENT

The monitoring wells installed in March 2004 during the HPS Site Investigation were developed between March 10 and March 15, 2004. Groundwater levels and the total depth of the wells were measured prior to and after completion of development. Wells were not developed sooner than 48 hours after installation. The wells were surged, bailed and/or pumped to remove accumulated sediment and improve hydraulic connection between the well and the formation. Groundwater was removed from the monitoring wells using a decontaminated stainless steel bailer or a diaphragm pump capable of removing solids. Groundwater parameters (temperature, pH, specific conductivity, turbidity, dissolved oxygen, and salinity) were monitored with a Horiba U-10. Attempts were made to develop the wells until groundwater became devoid of sediment (i.e., turbidity below 5 NTUs) and all other parameters stabilized. All downhole equipment was thoroughly decontaminated prior to and following use at each well using a phosphate-free detergent rinse, tap water rinse, and distilled water rinse. General information regarding well development for the three parcels is included below. Please refer to the well development logs for specific well development information.

The wells were surged and either bailed with a stainless steel bailer or pumped with a diaphragm pump. The wells were pumped or bailed until either parameter remained stable (including turbidity below 10 NTUs) or until over 200 gallons of water were removed. The amount of water removed from each well varied between 190 and 750 gallons. One well (IR07MW24A) was bailed dry in less than one hour.

This page left blank intentionally

6.0 WELL SURVEYING

The five monitoring wells were surveyed on April 14, 2004 by Meridian Surveying Engineering, Inc. The surveyors established the locations and elevations of the groundwater-monitoring wells using the following data:

- Basis of horizontal and vertical positions: National Geodetic Survey (NGS) stations designated as:

  Hunter East Point (PID- HT0620).
  SPC CA 3: N452848.3, E1462666– NAD 27 datum
  Elevation = 7.58– NGVD 29 datum

- Basis of horizontal positions: NGS stations designated as:

  Coleman (PID-HT2720)
  SPC CA 3: N 452359.7, E 1460002– NAD 27 datum

- Coordinates and elevations are provided in tenths and hundredths of feet.

This page left blank intentionally

Monitoring Well Completion Records

BROWN AND CALDWELL

MONITORING WELL COMPLETION RECORD

Basewide Groundwater Sampling Support at Parcels B, C, D E
Hunters Point Shipyard, San Francisco, CA
Contract No. N68711-00-D-0004/0074

IR07MW21A1

DRILLING INFORMATION

DRILLING LOCATION: Parcel B
DRILLING STARTED: 03 March 2004
WELL COMPLETED: 03 March 2004
PERMIT No. NA

DRILLING CO.: Resonant Sonic International (RSI)
LEAD DRILLER: J. Love
LICENSE: #802334
DRILLING RIG MODEL: Barber DK40
DRILLING METHOD: sonic
AUGER/CASING DIAMETER: I.D. 8 in., O.D. 8-5/8 in.

BORING INFORMATION

TOTAL BORING DEPTH: 16.5 feet
FILTER PACK: #2/16 Monterey sand
EMPLACEMENT METHOD:
☑ POURED ☐ TREMMIED

BENTONITE SEAL: 3/8 in. Enviro Plug chips
EMPLACEMENT METHOD:
☑ POURED ☐ TREMMIED
ANNULAR SEAL: NA
☐ POURED ☐ TREMMIED

CASING INFORMATION

BLANK: 4-in. dia. SCH40 PVC (Boart Longyear)
SCREEN: 4-in. dia. SCH40 PVC (Boart Longyear)
SLOT SIZE: 0.020-inch
CENTRALIZERS USED?
☐ YES ☑ NO;
CENTRALIZER DEPTHS: _____, _____

SURVEY INFORMATION

TOC ELEVATION: 13.89
GROUND ELEVATION: _____.
NORTHING CORD. 453941.51
EASTING CORD. 1459683.7
COORDINATE SYSTEM: State Plane NAD27,NAVD29
DATE SURVEYED: 12 April 2004
SURVEYOR: MSE, Inc.

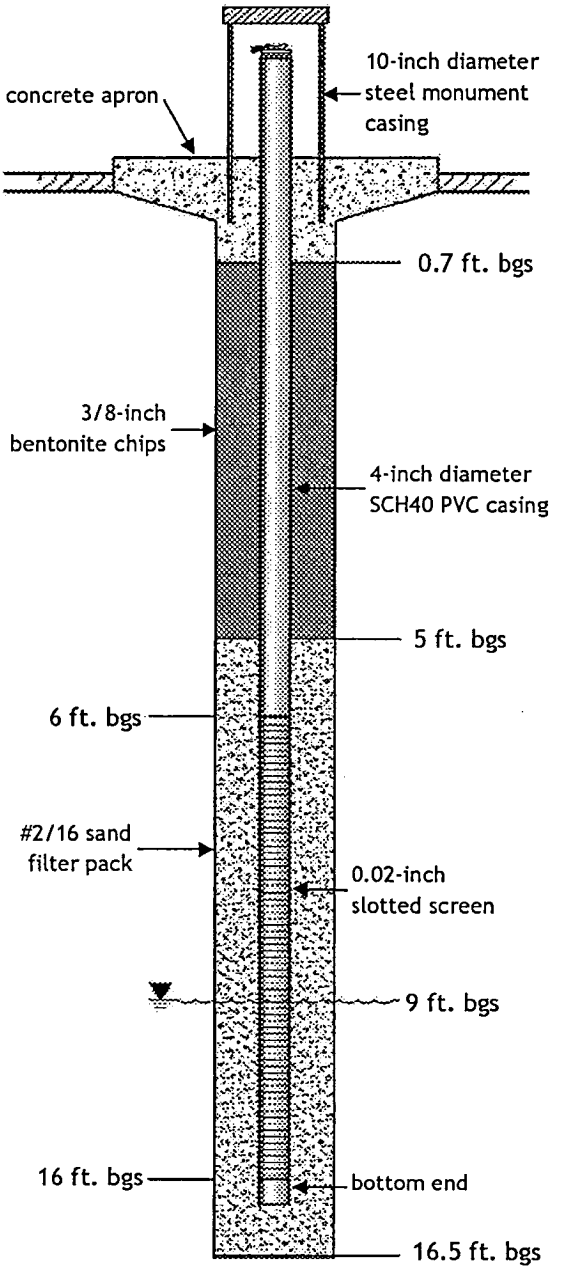

BROWN AND CALDWELL

MONITORING WELL COMPLETION RECORD

Basewide Groundwater Sampling Support at Parcels B, C, D E
Hunters Point Shipyard, San Francisco, CA
Contract No. N68711-00-D-0004/0074

IR07MW24A

DRILLING INFORMATION

DRILLING LOCATION: Parcel B
DRILLING STARTED: 03 March 2004
WELL COMPLETED: 03 March 2004
PERMIT No. NA

DRILLING CO.: Resonant Sonic International (RSI)
LEAD DRILLER: J. Love
LICENSE: #802334
DRILLING RIG MODEL: Barber DK40
DRILLING METHOD: sonic
AUGER/CASING DIAMETER: I.D. 8 in., O.D. 8-5/8 in.

BORING INFORMATION

TOTAL BORING DEPTH: 15.5 feet
FILTER PACK: #2/16 Monterey sand
EMPLACEMENT METHOD:
☑ POURED ☐ TREMMIED
BENTONITE SEAL: 3/8-in. chips
EMPLACEMENT METHOD:
☑ POURED ☐ TREMMIED
ANNULAR SEAL: NA
☐ POURED ☐ TREMMIED

CASING INFORMATION

BLANK: 4-in. dia. SCH40 PVC (Boart Longyear)
SCREEN: 4-in. dia. SCH40 PVC (Boart Longyear)
SLOT SIZE: 0.020-inch
CENTRALIZERS USED?
☐ YES ☑ NO;
CENTRALIZER DEPTHS: _____, _____

SURVEY INFORMATION

TOC ELEVATION: 16.26
GROUND ELEVATION: _____
NORTHING CORD. 453884.37
EASTING CORD. 1459749.67
COORDINATE SYSTEM: State Plane NAD27,NAVD29
DATE SURVEYED: 12 April 2004
SURVEYOR: MSE, Inc.

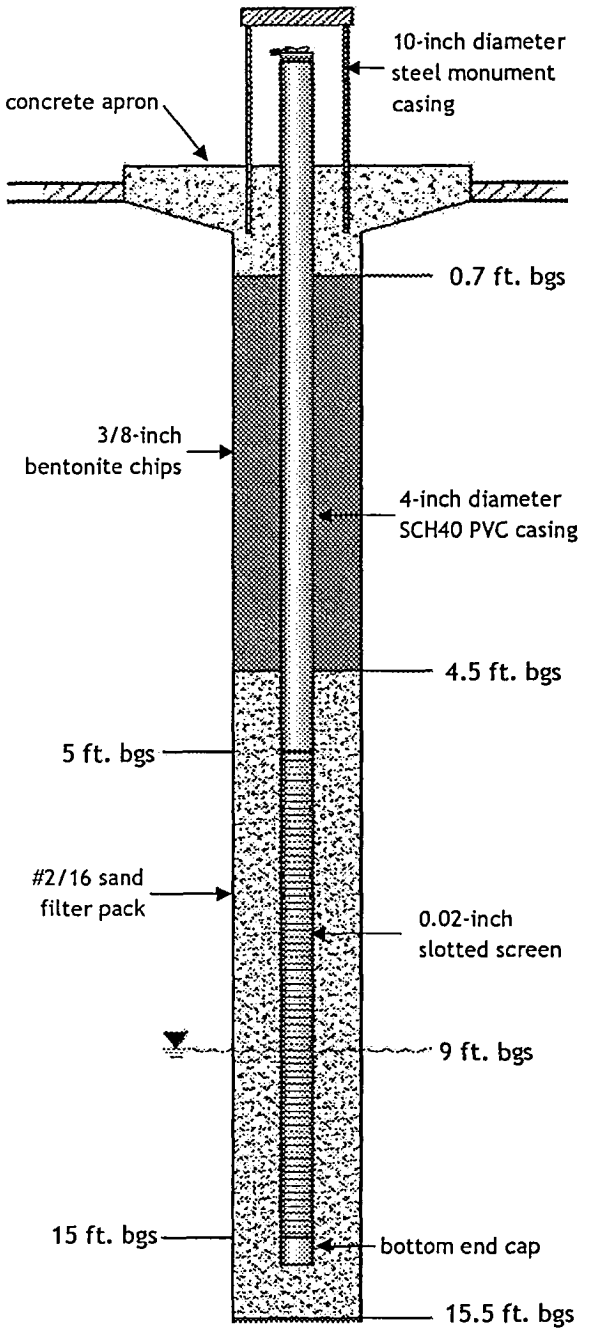

CDM Subcontract No.: 6218-999-003-CS
BC Project No.: 44/25577-002.5

Well No.: 2 of 21
Last Modified: 5/27/2004

BROWN AND CALDWELL

MONITORING WELL COMPLETION RECORD

Basewide Groundwater Sampling Support at Parcels B, C, D E
Hunters Point Shipyard, San Francisco, CA
Contract No. N68711-00-D-0004/0074

IR07MW25A

DRILLING INFORMATION

DRILLING LOCATION: Parcel B
DRILLING STARTED: 03 March 2004
WELL COMPLETED: 03 March 2004
PERMIT No. NA

DRILLING CO.: Resonant Sonic International (RSI)
LEAD DRILLER: J. Love
LICENSE: #802334
DRILLING RIG MODEL: Barber DK40
DRILLING METHOD: sonic
AUGER/CASING DIAMETER: I.D. 8 in., O.D. 8-5/8 in.

BORING INFORMATION

TOTAL BORING DEPTH: 18.5 feet
FILTER PACK: #2/16 Monterey sand
EMPLACEMENT METHOD:
☑ POURED ☐ TREMMIED
BENTONITE SEAL: 3/8-in. chips
EMPLACEMENT METHOD:
☑ POURED ☐ TREMMIED
ANNULAR SEAL: NA
☐ POURED ☐ TREMMIED

CASING INFORMATION

BLANK: 4-in. dia. SCH40 PVC (Boart Longyear)
SCREEN: 4-in. dia. SCH40 PVC (Boart Longyear)
SLOT SIZE: 0.020-inch
CENTRALIZERS USED?
☐ YES ☑ NO;
CENTRALIZER DEPTHS: _____, _____

SURVEY INFORMATION

TOC ELEVATION: 12.67
GROUND ELEVATION: _____.
NORTHING CORD. 453990.882
EASTING CORD. 1459624.7
COORDINATE SYSTEM: State Plane NAD27,NAVD29
DATE SURVEYED: 12 April 2004
SURVEYOR: MSE, Inc.

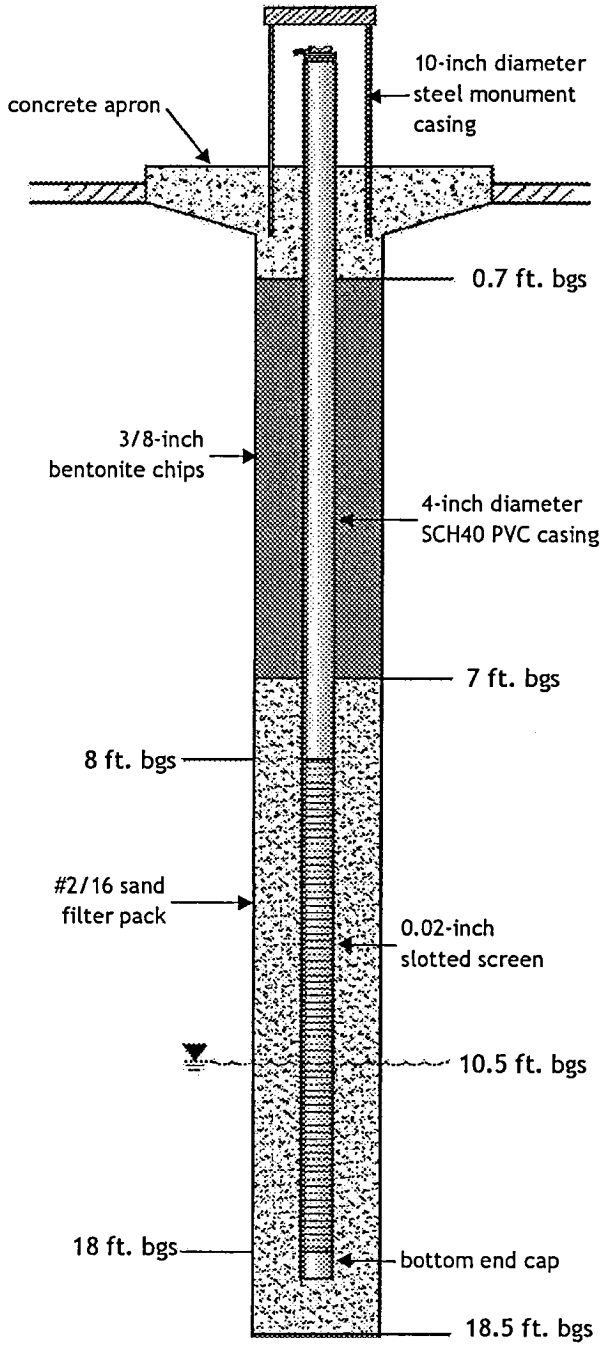

CDM Subcontract No.: 6218-999-003-CS
BC Project No.: 44/25577-002.5

Well No.: 3 of 21
Last Modified: 5/27/2004

BROWN AND CALDWELL

MONITORING WELL COMPLETION RECORD

Basewide Groundwater Sampling Support at Parcels B, C, D E
Hunters Point Shipyard, San Francisco, CA
Contract No. N68711-00-D-0004/0074

IR07MW26A

DRILLING INFORMATION

DRILLING LOCATION: Parcel B
DRILLING STARTED: 02 March 2004
WELL COMPLETED: 03 March 2004
PERMIT No. NA

DRILLING CO.: Resonant Sonic International (RSI)
LEAD DRILLER: J. Love
LICENSE: #802334
DRILLING RIG MODEL: Barber DK40
DRILLING METHOD: sonic
AUGER/CASING DIAMETER: I.D. 8 in., O.D. 8-5/8 in.

BORING INFORMATION

TOTAL BORING DEPTH: 15.5 feet
FILTER PACK: #2/16 Monterey sand
EMPLACEMENT METHOD:
☑ POURED ☐ TREMMIED
BENTONITE SEAL: 3/8-in. chips
EMPLACEMENT METHOD:
☑ POURED ☐ TREMMIED
ANNULAR SEAL: NA
☐ POURED ☐ TREMMIED

CASING INFORMATION

BLANK: 4-in. dia. SCH40 PVC (Boart Longyear)
SCREEN: 4-in. dia. SCH40 PVC (Boart Longyear)
SLOT SIZE: 0.020-inch
CENTRALIZERS USED?
☐ YES ☑ NO;
CENTRALIZER DEPTHS: _____, _____

SURVEY INFORMATION

TOC ELEVATION: 14.50
GROUND ELEVATION: _____.
NORTHING CORD. 453900.68
EASTING CORD. 1460093.3
COORDINATE SYSTEM: State Plane NAD27,NAVD29
DATE SURVEYED: 12 April 2004
SURVEYOR: MSE, Inc.

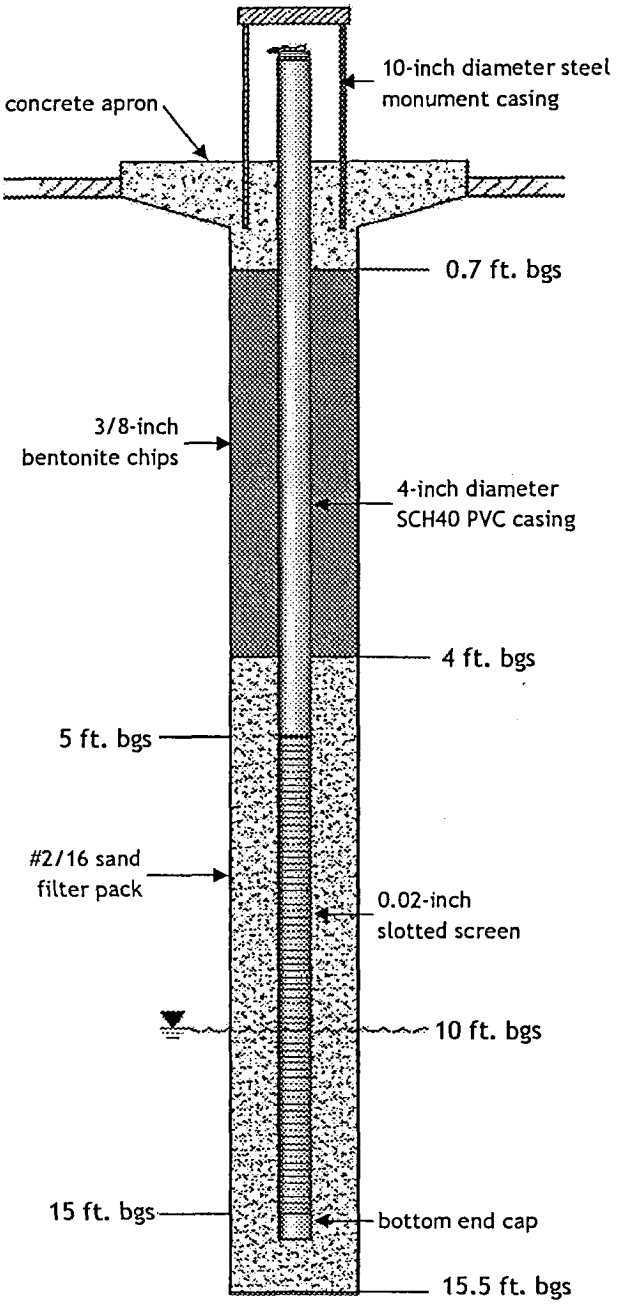

BROWN AND CALDWELL

MONITORING WELL COMPLETION RECORD

Basewide Groundwater Sampling Support at Parcels B, C, D E
Hunters Point Shipyard, San Francisco, CA
Contract No. N68711-00-D-0004/0074

IR07MWS-4

DRILLING INFORMATION

DRILLING LOCATION: Parcel B
DRILLING STARTED: 02 March 2004
WELL COMPLETED: 03 March 2004
PERMIT No. NA

DRILLING CO.: Resonant Sonic International (RSI)
LEAD DRILLER: J. Love
LICENSE: #802334
DRILLING RIG MODEL: Barber DK40
DRILLING METHOD: sonic
AUGER/CASING DIAMETER: I.D. 8 in., O.D. 8-5/8 in.

BORING INFORMATION

TOTAL BORING DEPTH: 16.5 feet
FILTER PACK: #2/16 Monterey sand
EMPLACEMENT METHOD:
☑ POURED ☐ TREMMIED
BENTONITE SEAL: 3/8-in. chips
EMPLACEMENT METHOD:
☑ POURED ☐ TREMMIED
ANNULAR SEAL: NA
☐ POURED ☐ TREMMIED

CASING INFORMATION

BLANK: 4-in. dia. SCH40 PVC (Boart Longyear)
SCREEN: 4-in. dia. SCH40 PVC (Boart Longyear)
SLOT SIZE: 0.020-inch
CENTRALIZERS USED?
☐ YES ☑ NO;
CENTRALIZER DEPTHS: _____, _____

SURVEY INFORMATION

TOC ELEVATION: 16.78
GROUND ELEVATION: _____.
NORTHING CORD. 453825.23
EASTING CORD. 1459913.2
COORDINATE SYSTEM: State Plane NAD27,NAVD29
DATE SURVEYED: 12 April 2004
SURVEYOR: MSE, Inc.

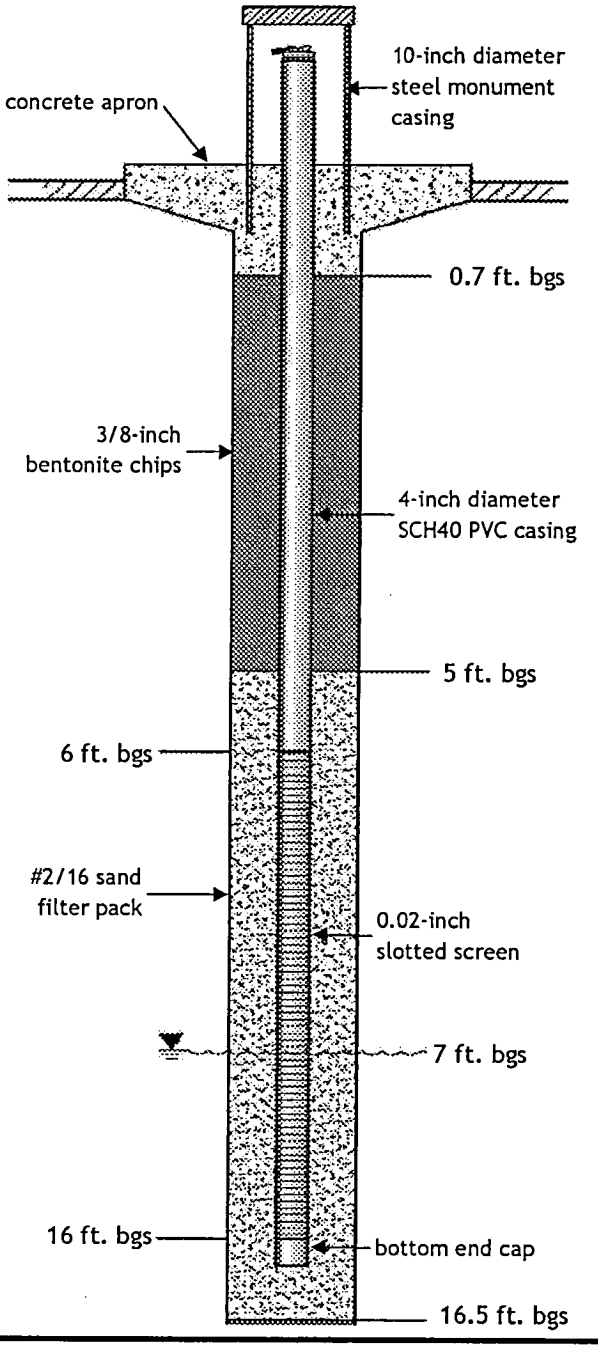

CDM Subcontract No.: 6218-999-003-CS
BC Project No.: 44/25577-002.5

Well No.: 5 of 21
Last Modified: 5/27/2004

MONITORING WELL IR10MW61A
Hunters Point Shipyard
San Francisco, CA

DEPTH IN FEET	SAMPLING: TYPE OF SAMPLER	SAMPLING: SAMPLING RESISTANCE	SAMPLES	SYMBOL	DESCRIPTION
0				GM	Asphalt (3-inch thickness) SILTY GRAVEL, (40, 20, 30, 10), angular, very dark gray (10YR 3/1), dry to moist
5					Cobble present unable to sample
				CL	CLAY, trace sand, low to moderate plasticity, greenish black (GL1 2.5/5G), moist
10	MC			CL	CLAY, trace sand and gravel, low to moderate plasticity, medium stiff, very dark greenish gray (GL1 3/5G), moist
15	MC			CL	GRAVELLY CLAY, trace sand, low to moderate plasticity, medium stiff, very dark greenish gray (GL1 3/5G), wet
20	MC			CL	CLAY, some gravel, angular (1 cm), low to moderate plasticity, medium stiff, dark greenish gray (G1 4/5G), moist to wet
25					
30					
35					

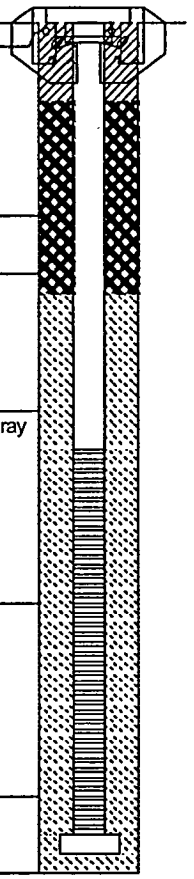

Job No: 23-035 Serial No.:	[redacted]		**Log of Boring**
Date Completed: Boring Depth: 22.0 ft.	Surface Elev: 10.1 Coordinates:		Location: US Navy HP Shipyard, San Francisco, CA

Top of Casing Elev:	ft. (RRD)	Casing Type: PV	PVC	Screened Interval:	11-21 ft.	Slot Size:	0.010 in.
Casing Depth:	ft. (RRD)	Casing Diam:	4" in.	Effective Interval:	7-21 ft.	Sand Pack:	3B

MONITORING WELL IR10MW62A
Hunters Point Shipyard
San Francisco, CA

DEPTH IN FEET	SAMPLING: TYPE OF SAMPLER	SAMPLING: SAMPLING RESISTANCE	SAMPLES	SYMBOL	DESCRIPTION
0				SC	Asphalt (3-inch thickness) SANDY CLAY, little gravel angular, low to moderate plasticity, dark gray (2.5Y 4/1), damp to moist
5	MC			SM	SILTY SAND, some gravel, (20, 40, 30, 10), angular, very dense, very dark grayish brown (2.5Y 3/2), dry to damp
				GM	SILTY GRAVEL, (40, 20, 25, 15), subangular to subround, dark gray (5Y 4/1), dry
10	MC			SM	SILTY SAND, little gravel (15, 40, 40, 5), angular, dense, very dark gray (5YR 3/1), damp
15	MC			GM	SILTY GRAVEL, (35, 30, 30, 5), angular, medium dense, greenish gray (GL1 5/5G), moist
				SP	Fine to medium SAND, greenish gray (GL1 5/5G)
20	MC			GM	SILTY GRAVEL, (35, 30, 30, 5), angular, medium dense, very dark gray (2.5Y 3/1), moist to wet
25					
30					
35					

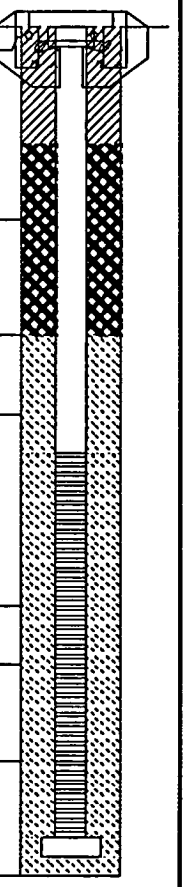

Job No: 23-035 Serial No.:						**Log of Boring**	
Date Completed: Boring Depth: 22.0 ft.		Surface Elev: 9.5 Coordinates:				Location: US Navy HP Shipyard, San Francisco, CA	
Top of Casing Elev: ft. (RRD) Casing Depth: ft. (RRD)		Casing Type: PV PVC Casing Diam: 4" in.		Screened Interval: 11-21 ft. Effective Interval: 8-21 ft.		Slot Size: 0.010 in. Sand Pack: 3B	

MONITORING WELL IR10MW71A
Hunters Point Shipyard
San Francisco, CA

DEPTH IN FEET	SAMPLING: TYPE OF SAMPLER	SAMPLING: SAMPLING RESISTANCE	SAMPLES	SYMBOL	DESCRIPTION
0					Concrete (13-inch thickness)
	CORE			GC	GRAVELLY CLAY, trace fine sand, low plasticity, medium stiff, dark gray (10YR 4/1), damp
	CORE				
5					
	CORE				
					FILL, White powdered material, ~ 6-inch, thickness
				GC	GRAVELLY CLAY, some fine sand, low plasticity, medium stiff, dark reddish gray (2.5YR 4/1), dry to damp
10					
	CORE				
15					
	CORE			GM	SILTY GRAVEL, (65, 10, 20, 5), angular, medium dense, dark greenish gray (GL1 4/10GY), damp to wet
20	CORE			SM	SILTY SAND (20, 35, 30, 15) angular, medium dense, dark greenish gray (GL1 4/10Y), damp
25					
30					
35					

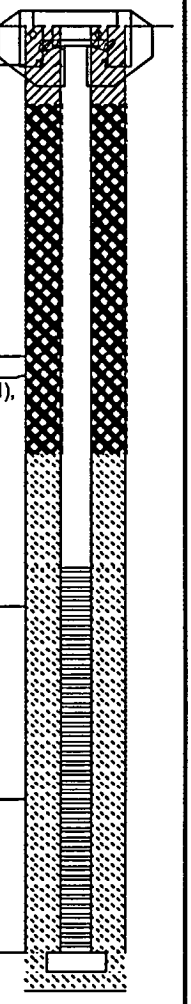

Job No: 23-035 Serial No.:						**Log of Boring**	
Date Completed: Boring Depth: 24.0 ft.		Surface Elev: 13.9 Coordinates:				Location: US Navy HP Shipyard, San Francisco, CA	
Top of Casing Elev:	ft. (RRD)	Casing Type: PV	PVC	Screened Interval:	14-24 ft.	Slot Size:	0.010 in.
Casing Depth:	ft. (RRD)	Casing Diam:	4" in.	Effective Interval:	11-24.5 ft.	Sand Pack:	3B

MONITORING WELL IR10MW76A
Hunters Point Shipyard
San Francisco, CA

DEPTH IN FEET	SAMPLING: TYPE OF SAMPLER	SAMPLING: SAMPLING RESISTANCE	SAMPLES	SYMBOL	DESCRIPTION
0					Concrete (11-inch thickness)
	CORE			GM	SILTY GRAVEL (50, 15, 25, 10), medium dense, angular, very dark grayish brown (2.5Y 3/2), damp
5					
	CORE				
10				CL	GRAVELLY CLAY, little fine sand, trace silt, low to moderate plasticity, medium stiff, dark olive gray (5Y 3/2), damp
	CORE				
15				CL	CLAY, little fine sand, trace silt, low to moderate plasticity, medium stiff, dark olive gray (5Y 3/2), damp
	AUGER				
20				GC	CLAYEY GRAVEL (60, 10, 5, 25), angular, dense, dark olive gray (5 Y 3/2), moist
25					
30					
35					

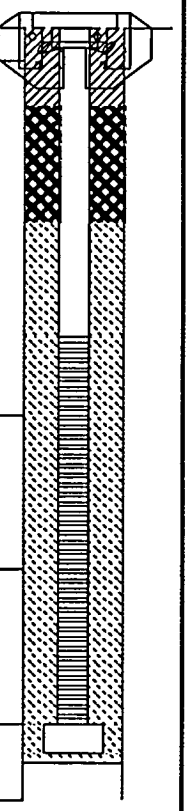

Job No: 23-035 Serial No.:	[redacted]		**Log of Boring**
Date Completed: Boring Depth: 20.0 ft.	Surface Elev: 13.8 Coordinates:		Location: US Navy HP Shipyard, San Francisco, CA

Top of Casing Elev:	ft. (RRD)	Casing Type: PV	PVC	Screened Interval:	8-18 ft.	Slot Size:	0.010 in.
Casing Depth:	ft. (RRD)	Casing Diam:	4" in.	Effective Interval:	5-18.75 ft.	Sand Pack:	3B

MONITORING WELL IR10MW79A
Hunters Point Shipyard
San Francisco, CA

DEPTH IN FEET	SAMPLING: TYPE OF SAMPLER	SAMPLING: SAMPLING RESISTANCE	SAMPLES	SYMBOL	DESCRIPTION
0					Asphalt (4-inch thickness)
				CL	GRAVELLY CLAY, moderate plasticity, dark gray (10YR 4/1), damp
5	AUGER				
				CL	SILTY CLAY, trace gravel, moderate olasticity, dark grayish brown (2.5Y 4/2), damp
10	AUGER				
				CL	SILTY CLAY, trace gravel and sand, low to moderate plasticity, grayish brown (2.5Y 5/2), damp
15	AUGER				
				CL CH	SILTY CLAY, trace sand, moderate to high plasticity, grayish brown (2.5Y 5/2), damp
20	AUGER				
25					
30					
35					

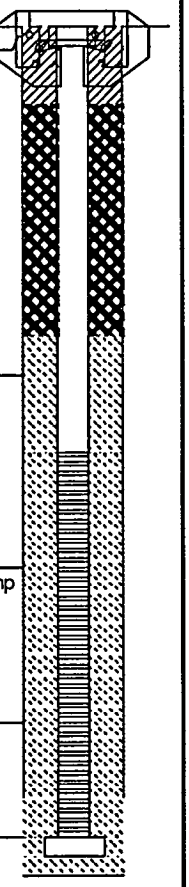

Job No: 23-035 Serial No.:	[redacted]		**Log of Boring**
Date Completed: Boring Depth: 20.0 ft.	Surface Elev: 10.2 Coordinates:		Location: US Navy HP Shipyard, San Francisco, CA
Top of Casing Elev: ft. (RRD) Casing Depth: ft. (RRD)	Casing Type: PV PVC Casing Diam: 4" in.	Screened Interval: 11-21 ft. Effective Interval: 8-21.5 ft.	Slot Size: 0.010 in. Sand Pack: 3B

MONITORING WELL IR10MW80A
Hunters Point Shipyard
San Francisco, CA

DEPTH IN FEET	SAMPLING: TYPE OF SAMPLER	SAMPLING: SAMPLING RESISTANCE	SAMPLES	SYMBOL	DESCRIPTION
0				GP GC	Asphalt (4-inch thickness) CLAYEY GRAVEL (55, 5, 0, 40), subangular to angular, very dense, dark grayish green (GL1 5/4G), slightly moist
5	MC				
				GM	SILTY GRAVEL (45, 10, 30, 15), subangular to anlgular, very dense, light brownish gray (2.5Y 6/2), slightly moist
10	MC				
				CL ML	SILTY CLAY, moderate plasticity, hard, dark greenish gray (10Y 4/1), moist
15	MC				
				CLG	GRAVELLY CLAY, non-plastic to low plasticity, very stiff to hard, brown (7.5YR 4/2), damp
20	MC				
25					
30					
35					

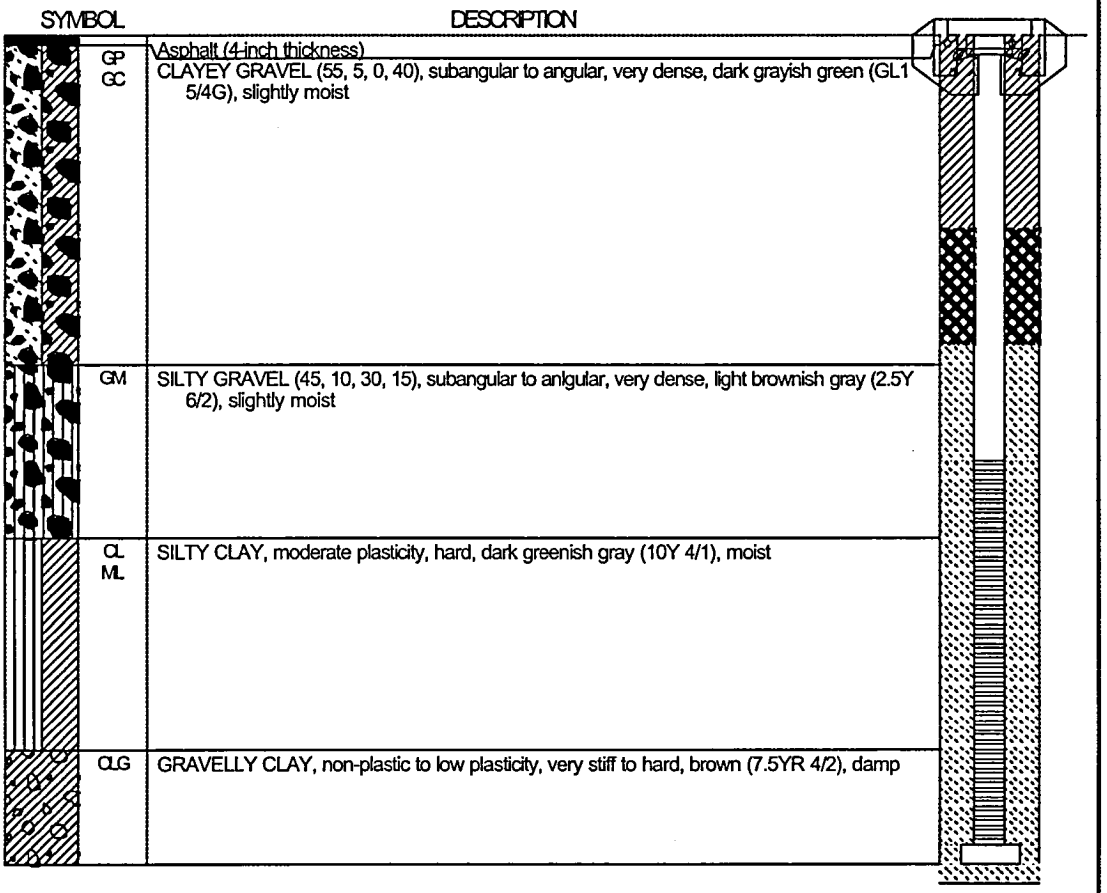

Job No: 23-035 Serial No.:	[redacted]		**Log of Boring**
Date Completed: Boring Depth: 21.5 ft.	Surface Elev: 9.7 Coordinates:		Location: US Navy HP Shipyard, San Francisco, CA
Top of Casing Elev: ft. (RRD) Casing Depth: ft. (RRD)	Casing Type: PV PVC Casing Diam: 4" in.	Screened Interval: 11-21 ft. Effective Interval: 8-21.5 ft.	Slot Size: 0.010 in. Sand Pack: 3B

Logs of Borings

Date Completed:	3/3/04	*Drilling method:*	
Logged By:	S. Titus (Brown & Caldwell)	*Hammer Wt:*	Sonic Rig
Total Depth:	16.5 ft	*Notes:*	Borehole logged from Sonic Core. The lithologic descriptions and USCS classifications are based entirely on visual/manual procedures.

Depth (feet)	Sample Number	Sample Type	Blows/Foot	Recovery (%)	OVA (ppm) PID/FID	USCS	Description	Remarks
0–5					0.7		**Sandy Silt w/ Gravel (ML)** - dark gray (10yr 4/1), dry, soft, 30-35% fine grained sand, 50-60% silt, 10-15% gravel	Boring Hand-Augered to 5' bgs
5–9					0.6		- same but increase gravel to 15-20% & decrease silt to 45-50%	
9–13					0		**Silty Gravel w/ Sand (ML)** - very dark brown (10yr 3/2), saturated, 50-55% fine to coarse gravel, 30-35% silt, 10-15% fine to medium grained sand, trace sand	▽
13–16.5					2.6		**Silt w/ Sand (ML)** - dark gray (10yr 4/1), damp, soft, 75-80% silt, 15-20% fine to medium grained sand, trace fine gravel	
16.5								Bottom of Boring = 16.5 feet

Well Construction

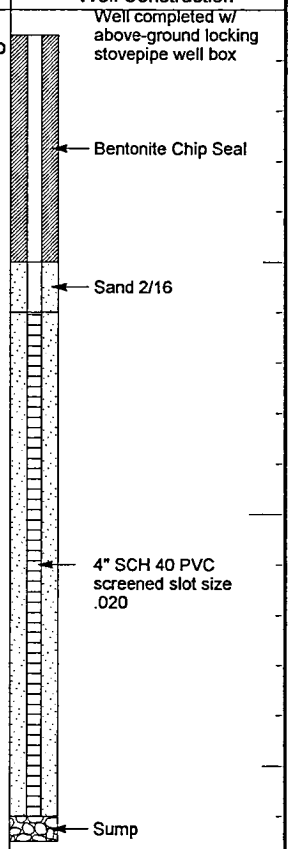

KLEINFELDER

PROJECT NO. 41330

LOG OF BORING NO. IR07MW21A1

Hunters Point Navel Shipyard
Parcel B
San Francisco, Ca.

PLATE **1**

U:\GINT\HUNTER'S POIN[illegible]CEL B.GPJ

6/9/2004 9:17:51 AM

Date Completed:	3/3/04	*Drilling method:*	
Logged By:	S. Titus (Brown & Caldwell)	*Hammer Wt:*	Sonic Rig
Total Depth:	15.5 ft	*Notes:*	Borehole logged from Sonic Core. The lithologic descriptions and USCS classifications are based entirely on visual/manual procedures.

Depth (feet)	Sample Number	Sample Type	Blows/Foot	Recovery (%)	OVA (ppm) PID/FID	USCS	Description	Remarks	Well Construction
1					1.3		**Gravelly Silty w/ Sand (SM)** - brown (10yr 4/3), dry, soft, 30% fine gravel, 50% silt, 15-20% fine to medium grained sand	Boring Hand-Augered to 5' bgs	Well completed w/ above-ground locking stovepipe well box
2									Bentonite Chip Seal
3							- same but increase gravel to 30-35% & decrease silt to 45-50%, trace clay		
4									
5					0.6		- same but color change to dark yellowish-brown (10yr 3/6)		Sand 2/16
6									
7									
8									
9					0.2		**Sandy Silty Gravel (GM)** - very dark gray brown (10yr 3/2), saturated, 10% coarse gravel, 40% fine gravel, 10-15% fine to medium grained sand, 25-30% silt	▽	
10									4" SCH 40 PVC screened slot size .020
11					0		**Gravelly Clay (CL)** - very darl gray (10yr 3/1), moist, medium plasticity, 80-90% clay, 10-15% fine gravel, trace medium grained sand		
12							- same bit color change to very dark brown (10yr 3/2)		
13									
14							**Gravelly Clay (CL)** - very dark gray (10yr 3/1), very moist, medium plasticity, 25-30% fine gravel, trace coarse gravel, 70-75% clay		
15					0				Sump
16							**Silty Gravel w/ Sand (GM)** - very dark gray, saturated, 40% fine to coarse gravel, 20% medium to coarse grained sand, 30-35% silt, trace clay	Bottom of Boring = 15.5 feet	
17									
18									
19									
20									
21									
22									
23									
24									
25									

KLEINFELDER

PROJECT NO. 41330

LOG OF BORING NO. IR07MW24A

Hunters Point Navel Shipyard
Parcel B
San Francisco, Ca.

PLATE **2**

U:\GINT\HUNTER'S POINT\PARCEL B.GPJ

6/9/2004 9:17:53 AM

Date Completed:	3/3/04	Drilling method:	
Logged By:	S. Titus (Brown & Caldwell)	Hammer Wt:	Sonic Rig
Total Depth:	18.5 ft	Notes:	Borehole logged from Sonic Core. The lithologic descriptions and USCS classifications are based entirely on visual/manual procedures.

Depth (feet)	Sample Number	Sample Type	Blows/Foot	Recovery (%)	OVA (ppm) PID/FID	USCS	Description	Remarks	Well Construction
1					0.8		**Silty Sand w/ Gravel (ML)** - dark gray (10yr 4/1), damp, 35-40% silt, 20% fine gravel, 40-45% fine sand	Boring Hand-Augered to 5' bgs	Well completed w/ above-ground locking stovepipe well box
2									
3							**Gravel (GW)** - dark gray (10yr 4/1), dry, 5-10% some fine grained sand, 10% silt, fine to coarse gravel		
4									Bentonite Chip Seal
5					4.5		**Gravelly Sand (GW)** - dark gray (10yr 4/1), damp, 25% fine gravel, 70-75% fine to medium grained sand, trace silt, bricks		
6									
7									Sand 2/16
8									
9							**Gravelly Clay (GP-GC)** - brown (10yr 4/3), very moist, medium plasticity, medium stiff, 30% fine gravel, 65-70% clay, trace silt		
10							- same	▽	
11							- same as 5-8.5 but saturated		
12							**Gravel w/ Silt & Sand (GW)** - dark gray (10yr 4/1), saturated, 15% medium to coarse grained sand, 15-20% silt, 15% coarse gravel, 40% fine gravel, trace clay		
13					0		- same		4" SCH 40 PVC screened slot size .020
14					23.5		**Gravelly Silt w/ Sand (GW-GM)** - very dark gray (2.5yr 3/1), saturated, 60-65% silt, 30% fine to coarse gravel, 10% clay, trace medium grained sand		
15							- black plastic debris @ 14'		
16									
17									
18							- wood debris @ 18'-18.5'		sand
19								Bottom of Boring = 18.5 feet	
20									
21									
22									
23									
24									
25									

KLEINFELDER

PROJECT NO. 41330

LOG OF BORING NO. IR07MW25A

Hunters Point Navel Shipyard
Parcel B
San Francisco, Ca.

PLATE 3

U:\GINT\HUNTER'S POINT ...\CEL B.GPJ

6/9/2004 9:17:54 AM

Date Completed:	3/2/04	*Drilling method:*	
Logged By:	S. Titus (Brown & Caldwell)	*Hammer Wt:*	Sonic Rig
Total Depth:	15.5 ft	*Notes:*	Borehole logged from Sonic Core. The lithologic descriptions and USCS classifications are based entirely on visual/manual procedures.

Depth (feet)	Sample Number	Sample Type	Blows/Foot	Recovery (%)	OVA (ppm) PID/FID	USCS	Description	Remarks	Well Construction
1					1.3		**Gravelly Sand w/ Clay (SP)** - dark brown (10yr 3/3), dry, fine gravel, loose, some iron oxide staining	Boring Hand-Augered to 5' bgs	Well completed w/ above-ground locking stovepipe well box
2									Bentonite Chip Seal
3									
4									Sand 2/16
5					2.5		**Silty Clay w/Gravel (CL)** - brown (10yr 4/2), dry, fine gravel, 5% coarse gravel, some iron oxide staining		
6									
7									
8									
9									
10					2.3		**Clayey Gravelly Sand (SW-SC)** - dark gray (10yr 3/1), saturated, fine gravel, trace coarse sand, fine to medium grained sand, poor recovery	▽	4" SCH 40 PVC screened slot size .020
11									
12									
13									
14									
15									sand
16								Bottom of Boring = 15.5 feet	
17									
18									
19									
20									
21									
22									
23									
24									
25									

KLEINFELDER

PROJECT NO. 41330

LOG OF BORING NO. IR07MW26A

Hunters Point Navel Shipyard
Parcel B
San Francisco, Ca.

PLATE **4**

U:\GINT\HUNTER'S POINT\PARCEL B.GPJ

6/9/2004 9:17:56 AM

Date Completed: 3/2/04

Logged By: S. Titus (Brown & Caldwell)

Total Depth: 16.5 ft

Drilling method:

Hammer Wt: Sonic Rig

Notes: Borehole logged from Sonic Core. The lithologic descriptions and USCS classifications are based entirely on visual/manual procedures.

Depth (feet)	Sample Number	Sample Type	Blows/Foot	Recovery (%)	OVA (ppm) PID/FID	USCS	Description	Remarks
0–4					0, 0	CL	**Silty Clay (CL)** - black (10yr 2/1), damp, medium plasticity, some iron oxide staining, trace mica **Gravelly Clay (CL)** - very dark gray brown (2.5yr 3/2), damp, 20% fine to coarse gravel, trace fine grained sand	Boring Hand-Augered to 5' bgs
4–7					0, 0	ML	**Clayey Silt w/ gravel (ML)** - dark gray brown (10yr 4/2), damp, soft, 50% silt, 35-40% clay, 10-15% fine to coarse gravel - same as 4-5' but moist	∇ (at approx. 7 ft)
7–11					0	GW-GC	**Clayey Gravel (GW-GC)** - dark brown (10yr 3/3), saturated, 80% fine to coarse gravel	
11–13					0	CL	**Sandy Clay (CL)** - dark grayish brown (10yr 4/2), 70-75% clay, 5% fine gravel, trace fine grained sand	
13–16.5					0	GW	**Gravel w/ Sand (GW)** - dark brown (10yr 3/3), saturated, 80-85% fine to coarse gravel, trace clay, 10-15% fine grained sand	Bottom of Boring = 16.5 feet

Well Construction

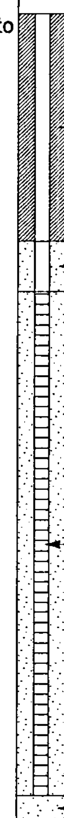

Depth scale: 1–25 feet

KLEINFELDER

PROJECT NO. 41330

LOG OF BORING NO. IR07MWS-4

Hunters Point Navel Shipyard
Parcel B
San Francisco, Ca.

PLATE 5

APPENDIX G

San Francisco Public Utilities Commission
Batch Discharge Permit

SAN FRANCISCO PUBLIC UTILITIES COMMISSION
BERM - 3801 Third Street, Suite 600, San Francisco, CA 94124 • Tel. (415) 695-7310 • Fax (415) 695-7388

WATER
HETCH HETCHY WATER & POWER
CLEAN WATER

GAVIN NEWSOM
MAYOR

E. DENNIS NORMANDY
PRESIDENT

ROBERT J. COSTELLO
VICE PRESIDENT

ANN MOLLER CAEN
ADAM WERBACH
RYAN L. BROOKS

PATRICIA E. MARTEL
GENERAL MANAGER

May 20, 2004

Ms. Sarah Callahan
Kleinfelder, Inc.
7133 Koll Center Parkway, Suite 100
Pleasanton, CA 94566

Re: Single Batch Discharge Permit
Discharge point – Hunters Point Shipyard

Dear Ms. Callahan:

In reply to a request dated May 7, 2004 and pursuant to Chapter X (Public Works Code) of Part II of the San Francisco Municipal Code, Article 4.1, permission, revocable by the General Manager of the Public Utilities Commission, is granted to Kleinfelder, Inc. (Permittee) to properly discharge approximately 6,000 gallons of wastewater generated from groundwater well installation/development/purging/and sampling activities into the sanitary sewerage system at the above referenced site.

The Permittee shall:

1.) Be in compliance with:

A. The requirements of Article 4.1, Chapter X, Part II, San Francisco Municipal Code, and amendments thereto;

B. Any additional discharge standards subsequently adopted by the City;

C. The United States Environmental Protection Agency's regulations contained in 40 CFR Parts 403, and

D. Any other applicable provisions of Federal or State laws or regulations.

The Permittee, by acceptance of this permit, agrees to indemnify and hold harmless City and County of San Francisco (City) from any and all costs, claims, damages, fines, remediation costs, losses and other expenses arising from the discharge into the sewerage system.

SFPUC

WATER
HETCH HETCHY
WATER & POWER
CLEAN WATER

SAN FRANCISCO PUBLIC UTILITIES COMMISSION
BERM - 3801 Third Street, Suite 600, San Francisco, CA 94124 • Tel. (415) 695-7310 • Fax (415) 695-7388

GAVIN NEWSOM
MAYOR

E. DENNIS NORMANDY
PRESIDENT

ROBERT J. COSTELLO
VICE PRESIDENT

ANN MOLLER CAEN
ADAM WERBACH
RYAN L. BROOKS

PATRICIA E. MARTEL
GENERAL MANAGER

The Permittee by acceptance of this permit agrees to compensate the City in full for all damage to City or public property under its jurisdiction from operation under this permit, regardless of the negligence of the City.

This permit shall expire 30 days from the above date of issuance.

Should you have any questions, please contact Gary Ong at (415) 695-7365.

Very truly yours,

Tommy Lee, Division Engineer
Bureau of Environmental Regulation
and Management

SFPUC

SAN FRANCISCO PUBLIC UTILITIES COMMISSION
Bureau of Environmental Regulation and Management
3801 THIRD STREET, SUITE 600, SAN FRANCISCO, CA 94124 • Tel. (415) 695-7310 • Fax (415) 695-7388

BATCH WASTEWATER PERMIT APPLICATION

1. Name of business where wastewater was generated :

Hunters Point Naval Shipyard

2. Name of business applying for permit (if different from 1. above) :

Kleinfelder (on behalf of the US Department of the Navy, Southwest Division, Naval Facilities Engineering Command

3. Mailing address of business applying for permit :

Kleinfelder:
7133 Koll Center Parkway, Suite 100
Pleasanton, CA 94566

Navy:
1220 Pacific Highway
San Diego, CA 92132-5190

4. Activity resulting in wastewater generation :

Groundwater well installation, well development, groundwater well purging/sampling activities

5. Location of wastewater generation :

Hunters Point Naval Shipyard - Parcels B, C, D

6. Total estimated volume (or volume flow rate) of wastewater discharge :

6,000 gallons

7. Estimated duration of wastewater discharge :

1-2 days

8. Proposed sewer opening for discharge :

☐ Side Sewer; ☐ Catch Basin; ☐ Storm Drain; ☒ Manhole

9. Location of sewer opening :

in Spear Street, near intersection with Fisher Street (see site map)

10. Does an underground storage tank for petroleum liquids currently exist on the site ?

☐ YES; ☒ NO

11. Has an underground storage tank for petroleum liquids been recently removed from the site ?

☐ YES; ☒ NO

12. Has the wastewater been exposed to petroleum contamination ?

☒ YES; ☐ NO

13. Were hazardous materials or waste ever stored on the site ?

☒ YES; ☐ NO

14. Has the wastewater been exposed to hazardous waste contamination ?

☒ YES; ☐ NO

15. Has the wastewater resulted from groundwater extracted within the reclaimed area specified in Section 1001(a)2.(A) of Article 20 ? (See Section 11.0 in "Requirements For Batch Wastewater Discharges".)

☒ YES; ☐ NO

16. Will the wastewater be subjected to any treatment before discharge ?

☐ YES; ☒ NO

17. If so, describe the method(s) of treatment :

-NA-

18. **Attach a site plan** showing the source of the wastewater, the sampling location(s) or monitoring well(s), and the proposed discharge location (side sewer(s), catch basin(s), storm drain(s) or manhole(s)).

19. **Attach a copy of applicable analytical results from a representative sample of the wastewater.** (See Sections 8.0, 9.0, 10.0 & 11.0 in "Requirements For Batch Wastewater Discharges".)

20. Certification Statement :

I certify under penalty of law, that this document and all attachments were prepared under my direction or supervision in accordance with a system designed to assure that qualified personnel properly gather and evaluate the information submitted. Based on my inquiry of the person or persons who manage the system, or those persons directly responsible for gathering the information, the information submitted is, to the best of my knowledge and belief, true, accurate and complete. I am aware that there are significant penalties for submitting false information, including the possibility of fine and imprisonment for knowing violations.

Name: MICHAEL MENTINK Title: NAVY, SW DIV, CSO, ENVIR COMPL.

Signature[1]: Michael Mentink Date: 5/7/04

[1] *To be signed by an authorized representative of the discharger. An authorized representative may be (a) a principal executive officer or official; (b) a general partner or proprietor; or (c) a duly authorized representative of the individual designated in (a) or (b).*

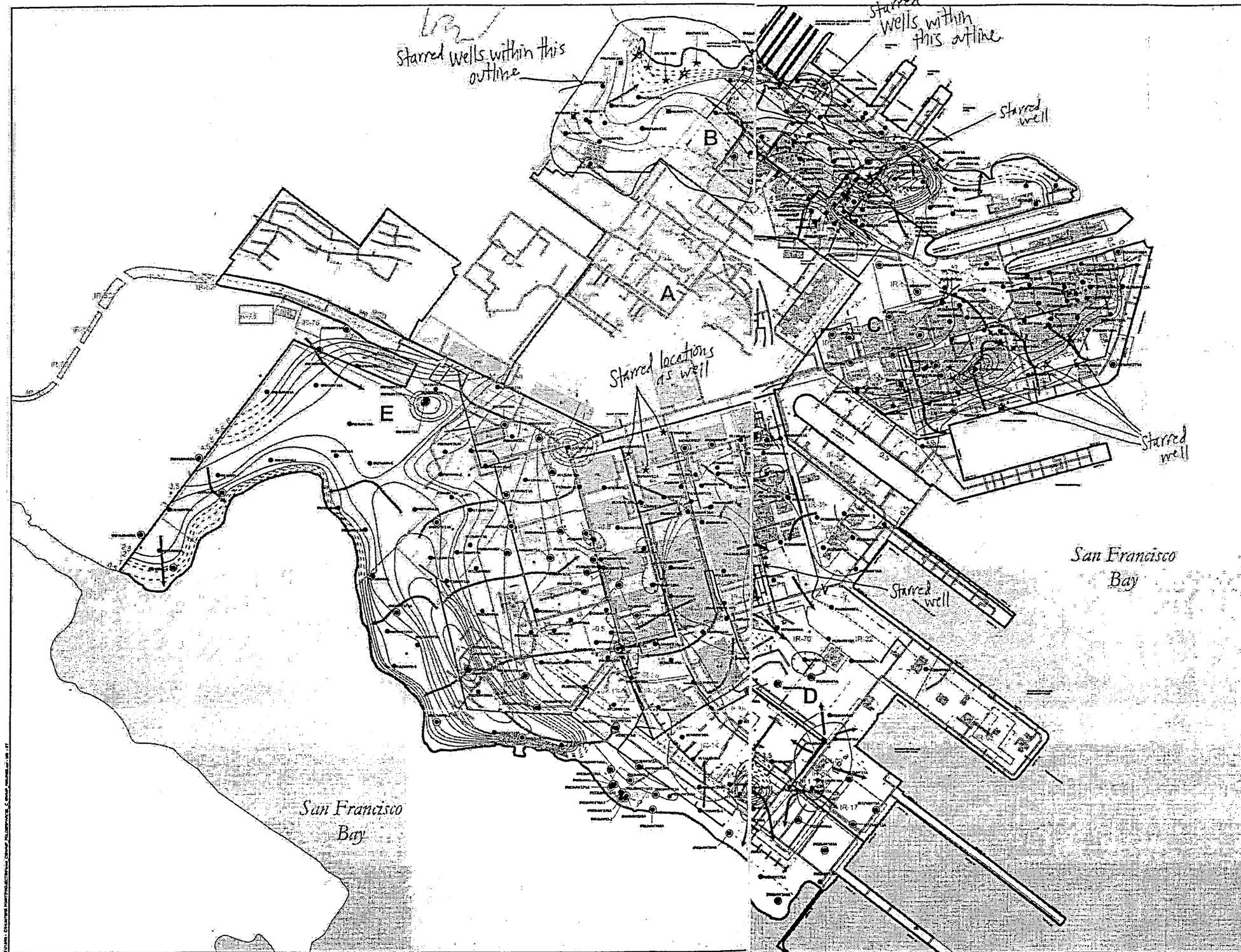

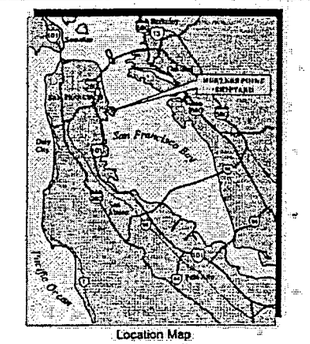

Location Map

Wells Selected for Groundwater Level Measurement

- ★ Proposed New A-Aquifer Well
- ● A-Aquifer Well Meaured in Phase III GDGI
- ◉ A-Aquifer Well Added to GWMP Since the PhaseIII GDGI
- ○ A-Aquifer Piezometer Added to GWMP

Wells Not Selected for Groundwater Level Measurement

- Decommissioned A-Aquifer Well Measured in Phase III GDGI
- A-Aquifer Monitoring Well
- A-Aquifer Groundwater Level Contours, 2/20/02 (dashed where inferred)
- A-Aquifer Groundwater Flow Direction
- Water Utility Line
- Sanitary Sewer Line
- Submerged Sanitary Sewer Line
- Storm Drain Line
- Submerged Storm Drain Line
- Building/Building Designation
- Site Boundary/Site Designation
- Parcel Boundary/Parcel Designation
- Non-Navy Property

Notes:
GDGI Groundwater Data Gaps Investigation
GWMP Groundwater Monitoring Plan

N

400 0 400 800
Scale in Feet

Tetra Tech EM Inc.

Hunters Point Shipyard, San Francisco, California
U.S. Navy Southwest Division, NAVFAC, San Diego

FIGURE G-1
A-AQUIFER WELLS SELECTED FOR GROUNDWATER LEVEL MEASUREMENTS

SAP, Basewide Groundwater Monitoring Program

Wastewater source locations

page 1

page 2

4203 West Swift ∇ Fresno, California 93722 ∇ Phone 559-275-2175 ∇ Fax 559-275-4422

Case Narrative

ARF: 43962

Project: 41330 Hunters Point Shipyard

State Certification Number: CA1312

Results in this report apply to the samples analyzed in accordance with the chain of custody document. This analytical report must be reproduced in its entirety.

Sample Receipt Information:

The sample group was received March 18, 2004, at 6°C. The samples were assigned Analytical Request Form (ARF) number 43962. The sample numbers and requested analyses were compared to the chain of custody. TPH gas analysis was added to the trip blank via telephone by Sarah, March 19, 2004. Amended chains of custody with corrected sample identifications were received via fax March 25, 2004 and via email March 29, 2004. The client IDs in the sample table below reflect the client's changes. The amended chains of custody, the facsimile and email are included in the raw data section of this package.

Sample Table

CLIENT ID	APPL ID	Matrix	Date Sampled	Date Received
IRIDW1Q001	AP66854	Water	3-17-04	3-18-04
IDWTB001	AP66855	Water	3-17-04	3-18-04

APPL - Analysis Request Form

43962

Client: Kleinfelder
Address: 5010 Shoreham Place
San Diego, CA 92122
Attn: Stacie Wissler
Phone: 858-320-2244 Fax: 858-320-2001
Job: 41330/2.07 Hunters Point Shipyard
PO #: NA
Chain of Custody (Y/N): Y # 15628, 15629
RAD Screen (Y/N): Y pH (Y/N): Y
Turn Around Type: 2 WEEKS

Received by: EW
Date Received: 3/18/04 Time: 08:00
Delivered by: AEROSPEED
Shuttle Custody Seals (Y/N): Y
Chest Temp(s): °6 HB 66636
Color: RED,ORGGRN,VOA FRIG
Samples Chilled until Placed in Refrig/Freezer: Y
Project Manager: DIANE ANDERSON
QC Report Type: DVP4/CA/NEDTS
Due Date: 4/1/04

Comments:
2 WEEK TAT for Form 1s & 28 DAY for DVP.
Report to MDL, use self calculating forms with MDLs listed.
Do not send hardcopy; send pdf on CD; email EDDs.
One VOA labeled Trip Blank rec'd with air bubble larger than a pea.
COD and Flashpoint subbed to BSK.
"' No CLP on this ARF "'

Sample Distribution:
GC: 1-$81HP, 1-$87HP, 1-$8PHP, 1-$DIHP, 1-$PCBW
Extractions: 1-_SEP004, 1-_SEP009, 1-_SEP011
VOA: 2-$86HP, 2-$GAHP
Metals: 1-$61HP, 1-$HG
Wetlab: 1-$37HP(), 1-$9040(), 1-$CNHP(), 1-$TSSH(), 1-PH-9040
Other: 1-SUB

Charges:

Invoice To:

Client ID	APPL ID	Sampled		Analyses Requested
1. IRIDW1Q001	AP66854W	3/17/04	11:55	$37HP(), $61HP, $81HP, $86HP, $87HP, $8PHP, $9040(), $CNHP(), $DIHP, $GAHP, $HG, $PCBW, $TSSH(), PH-9040, SUB -- Diesel w/ silica gel clean up
2. IDWTB001	AP66855W	3/3/04	00:00	$86HP, $GAHP

Initials _____ Date _____

APPL Sample Receipt Form

ARF# 43962

Sample	Container Type	Count	Sample	Container Type	Count	Sample	Container Type	Count
AP66854	[3] PL 500mL	3						
	[6] PL 500mL - HNO3	1						
	[12] PL 500mL NaOH, Zn Acetat	2						
	[13] VOAs - HCL	6						
	[17] Amber Liter	6						
	[25] Subcontract	2						
AP66855	[13] VOAs - HCL	4						

APPL, Inc.
4203 W. Swift
Fresno, CA 93722

Phone: (559) 275 2175

Fax: (559) 275-4422

CHAIN OF CUSTODY RECORD

C.O.C. # 15628

Report to: PLEASE PRINT
Company Name: Kleinfelder
Address:
Phone:
Fax:
Attn:

Invoice to: PLEASE PRINT
Company Name:
Address:
Phone:
Fax:
Attn:

Project Name/Number: Hunters Point / 41330/2.07
Purchase Order Number:
Sampler (Print): Sarah Callahan
Sampler (Signature): Sarah Callahan

Date Shipped: 3/17/04
Carrier: Aerospeed
Waybill No.:
Comments: NEW ID#

Analysis Requested/Method Number

Sample Identification	Location	Date Collected	Time Collected	Matrix	Number of Containers	[illegible]	VOC 624/8260	[illegible]	[illegible]	7200 [illegible]	[illegible]	[illegible]	TPH GC/MS	TPH GC/MS	[illegible]	[illegible]	[illegible]	Comments
IDW-031704	IDW Water Tank	3/17/04	1155	H_2O	19	X	X	X	X	X	X	X	X	X	X	X	X	~~IDWEB001~~ IDWSW001 SVL 3/25/04
Trip Blanks	Trip Blank/APPL	3/17/04	—	[illegible]	4		X											IDWTB001
Temp Blank	Temp Blank/APPL	3/17/04	—	[illegible]	1	X	X	X	X	X	X	X	X	X	X	X	X	

Shuttle Temperature:

Turnaround Requested: MUST CHECK ONE
☐ Standard (2-3 week) ☒ One week ☐ 24-48 hour

Sample Disposal:
☐ Return to client ☒ Disposal by Lab (30 days unless)

Relinquished by sampler:	Date	Time	Received by:	Relinquished by:	Date	Time	Received by:
Sarah Callahan	3/17/04	3:15					
Relinquished by:	**Date**	**Time**	**Received by:**	**Relinquished by:**	**Date**	**Time**	**Received at lab by:**

White: Return to client with report Yellow: Laboratory Copy Pink: Sampler

APPL, Inc.
4203 W. Swift
Fresno, CA 93722

Phone: (559) 275 2175

Fax: (559) 275-4422

CHAIN OF CUSTODY RECORD

C.O.C. No 15629

Report to: PLEASE PRINT		Invoice to: PLEASE PRINT	
Company Name: Kleinfelder	Phone:	Company Name:	Phone:
Address:	Fax:	Address:	Fax:
Attn:		Attn:	

Project Name/Number	Sampler (Print)	Date Shipped: 3/17/04
Hunters Point / 41330/2.07	Sarah Callahan	Carrier: Aerospeed
Purchase Order Number	Sampler (Signature): Sarah Callahan	Waybill No.:
		Comments:

Analysis Requested/Method Number

Sample Identification	Location	Date Collected	Time Collected	Matrix	Number of Containers	Flashpoint 1010 Cumbell	TEMP									NEW ID#
IDW-031704	IDW Water Tank	3/17/04	1155	H2O	Same (1)	X										IDWSW001
~~Trip Blank~~	~~Trip Blank/APPL~~	~~3/17/04~~	~~—~~	~~H2O~~	~~Same (4)~~											~~IDWTB002~~ SHL 3/25/04
Temp Blank	Temp Blank/APPL	3/17/04	—	H2O	Same (1)		X									

SHL 3/25/04

Shuttle Temperature:	Turnaround Requested: MUST CHECK ONE	Sample Disposal:
	☐ Standard (2-3 week) ☒ One week ☐ 24-48 hour	☐ Return to client ☒ Disposal by Lab (30-day retention)

Relinquished by sampler:	Date	Time	Received by:	Relinquished by:	Date	Time	Received by:
Sarah Callahan	3/17/04	3:15p					
Relinquished by:	**Date**	**Time**	**Received by:**	**Relinquished by:**	**Date**	**Time**	**Received at lab by:**

White: Return to client with report Yellow: Laboratory Copy Pink: Sampler

APPL, Inc.
4203 W. Swift
Fresno, CA 93722

Phone: (559) 275 2175

Fax: (559) 275-4422

CHAIN OF CUSTODY RECORD

C.O.C. № 15628

Report to: PLEASE PRINT
Company Name Kleinfelder
Phone:
Address
Fax:
Attn:

Invoice to: PLEASE PRINT
Company Name
Phone:
Address
Fax:
Attn:

Project Name/Number: Hunters Point / 41330/2.07
Sampler (Print): Sarah Callahan
Purchase Order Number:
Sampler (Signature): Sarah Callahan

Date Shipped: 3/17/04
Carrier: Aerospeed
Waybill No.:
Comments:

Analysis Requested/Method Number

Sample Identification	Location	Date Collected	Time Collected	Matrix	Number of Containers	Metals 6010B/7000 SW-846	VOCs 5030/8260B SW-846	SVOCs 8270C SW-846	Chlorinated Pest 8081A SW-846	PCBs 8082 SW-846	Cyanide 9010 SW-846	Sulfide 376.2 MCAWW	TPH 8015B, mod 8015B w/ silica gel	TSS 160.2 MCAWW	pH 9040/9045C SW-846	Chem O2 demand 410.1 MCAWW 5220B SMCWW	
IDW-031704	IDW Water Tank	3/17/04	1155	H_2O	19	X	X	X	X	X	X	X	X	X	X	X	12
Trip Blanks	Trip Blank/APPL	3/3/04	—	H_2O	4		X						(X)				(X) per Sarah add TPH-Gas analysis
Temp Blank	TempBlank/APPL	3/17/04	—	H_2O	1	~~X~~	~~X~~	~~X~~	~~X~~	~~X~~	~~X~~	~~X~~	~~X~~	~~X~~	~~X~~	~~X~~	to Trip Blanks: 3-19-04 rw
							Sec										

Shuttle Temperature:

Turnaround Requested: MUST CHECK ONE
☐ Standard (2-3 week) ☒ One week ☐ 24-48 hour

Sample Disposal:
☐ Return to client ☒ Disposal by Lab (30-day retention)

Relinquished by sampler:	Date	Time	Received by:	Relinquished by:	Date	Time	Received by:
Sarah Callahan	3/17/04	3:15p					
Relinquished by:	**Date**	**Time**	**Received by:**	**Relinquished by:**	**Date**	**Time**	**Received at lab by:**
					3/18/04	0800	[signature]

White: Return to [illegible] with report Yellow: Laboratory Copy Pink: Sampler

APPL, Inc.
4203 W. Swift
Fresno, CA 93722

Phone: (559) 275 2175

Fax: (559) 275-4422

CHAIN OF CUSTODY RECORD

C.O.C. № 15629

Report to: PLEASE PRINT
Company Name: Kleinfelder
Address:
Attn:
Phone:
Fax:

Invoice to: PLEASE PRINT
Company Name:
Address:
Attn:
Phone:
Fax:

Project Name/Number: Hunters Point / 41330/2.07
Purchase Order Number:
Sampler (Print): Sarah Callahan
Sampler (Signature): Sarah Callahan

Date Shipped: 3/17/04
Carrier: Aerospeed
Waybill No.:
Comments:

Sample Identification	Location	Date Collected	Time Collected	Matrix	Number of Containers	Flashpoint 1010 Sw-846	TEMP									
DW-031704	IDW Water Tank	3/17/04	1155	H_2O	same	X										
Trip Blanks	Trip Blank / APPL	3/3/04	—	H_2O	same (4)											
Temp Blank	Temp Blank / APPL	3/17/04	—	H_2O	same (1)		X									

Cooler Temperature:

Turnaround Requested: MUST CHECK ONE
☐ Standard (2-3 week) ☒ One week ☐ 24-48 hour

Sample Disposal:
☐ Return to client ☒ Disposal by Lab (30-day retention)

Relinquished by sampler:	Date	Time	Received by:	Relinquished by:	Date	Time	Received by:
Sarah Callahan	3/17/04	3:15p					

Relinquished by:	Date	Time	Received by:	Relinquished by:	Date	Time	Received at lab by:
					3/17/04	0800	

Note: Return to client with report Yellow: Laboratory Copy Pink: Sampler

Robert Wise

From: "Stacie Wissler" <swissler@kleinfelder.com>
To: "Robert Wise" <rwise@applinc.com>
Cc: "Stacie Wissler" <swissler@kleinfelder.com>
Sent: Monday, March 29, 2004 2:32 PM
Subject: RE: COC ID amends..

Okay here are the revisions....

COC# 15628 - Change IDW-031704 (revised to IDWSW001) to IRIDW1Q001 AP16854 43962
COC# 16150 - Change DE-I-031904 (revised to IDWsw002) to IRSW1Q001 67013 43990
COC# 15632 - Change HYW-032204 to IRSW1Q002 67113 44002

Okay, I am getting a handle on this.
Thanks and I appreciate your efforts.

stacie wissler
chemist/REA I
(858) 320-2244 office
(858) 320-2001 fax

-----Original Message-----
From: Robert Wise [mailto:rwise@applinc.com]
Sent: Monday, March 29, 2004 1:48 PM
To: Stacie Wissler; Diane
Subject: Re: COC ID amends..

Hi Stacie,

No, we don't have results for the Hydrant sample yet. We can change the sample before we have the final report together, so just let me know if down the road. I understand you probably have to go through the same steps Diane and I went through last week to make sure the IDs are all straight. Whenever you get around to it, just let us know what changes you need. I'll keep you informed if we send a package for that sample.

Thanks,

Robert J. Wise
APPL, Inc.

----- Original Message -----
From: "Stacie Wissler" <swissler@kleinfelder.com>
To: "Robert Wise" <rwise@applinc.com>
Sent: Monday, March 29, 2004 11:52 AM
Subject: RE: COC ID amends..

FAX

DATE: 3/25/04

TO: DIANE ANDERSON

FAX NUMBER: (559) 2754422

FROM: STACIE WISSLER

TELEPHONE: 619.8884265

TRAILOR: 415.8222253

Number of pages including this cover sheet: 13

- ☐ Urgent
- ☐ For Review
- ☐ Please Comment
- ☐ Please Reply:

Comments: DIANE —

HERE REVISED GROUNDWATER COCs. I AM STILL WORKING ON SOIL COCs. THANK YOU!

Stacie

This FAX is being sent from **baycopy plus**,
a public business service center (415) 647-3801 ▪ Fax (415) 647-3454 ▪ email: baycopy@msn.com

03/25/04 12:20 FAX 415 647 3454 BAYCOPY PLUS 001

COOLER RECEIPT FORM

Project: 41330 Huntsman Bioft Stiffy-rk Date Received: 3/18/04 Number of Coolers: 1

1. Did cooler come with a shipping slip (air bill, etc.)? ~~YES~~ NO NA
   If yes; enter carrier name AEROSPEED enter air bill numbers:1) _____
   2)_____ 3)_____
2. If cooler belongs to APPL, has it been logged into the ice chest database? YES ~~NO~~ NA
3. Were custody seals on outside of cooler? ~~YES~~ NO NA
4. How many? 2 Date on seal? 3/17/04 Name on seal? See the Side
5. Were custody seals unbroken and intact at the time of arrival? ~~YES~~ NO NA
6. Were samples screened for radioactivity? ~~YES~~ NO NA
7. Was a chain of custody received? ~~YES~~ NO NA
8. Were the custody papers filled out properly? ~~YES~~ NO NA
9. Were the custody papers signed in the appropriate places? ~~YES~~ NO NA
10. Was the project identifiable from custody papers? ~~YES~~ NO NA
11. Was a sufficient amount of holding time remaining to analyze the samples? ~~YES~~ NO NA
12. Is location where sample was taken listed on the COC? ~~YES~~ NO NA
13. If required, was enough ice used? Type of ice: WET ICE ~~YES~~ NO NA
14. Shuttle temp(s):1) 6° 2)_____ 3)_____ Serial number of certified thermometer used: HB66636
15. Was a temperature blank included in the cooler? ~~YES~~ NO NA
16. Describe type of packing in cooler: Sample & WET ICE
17. Were all containers sealed in separate bags? YES ~~NO~~ NA
18. Did all containers arrive unbroken and were labels in good condition? ~~YES~~ NO NA
19. Were all container labels complete (ID, date, time, signature, preservative, etc.)? ~~YES~~ NO NA
20. Did all container labels agree with custody papers? ~~YES~~ NO NA
21. Were correct containers used for the tests indicated? ~~YES~~ NO NA
22. Were correct preservatives added to the samples? ~~YES~~ NO NA
23. Was a sufficient amount of sample sent for tests indicated? ~~YES~~ NO NA
24. Were bubbles present in volatile samples? ~~YES~~ NO NA
    If yes, list by sample ID. The following VOAs were received with air bubbles:
    Larger than a pea: Trip Blank W04
    Smaller than a pea: Trip Blank W01, W03

Signature of personnel receiving samples: [signature]

Second reviewer: [signature]

Comments: _____

Name of project manager notified_____ Date and Time of notification_____

Name of client notified_____ Date and Time of notification_____

Information given to client_____ By whom (Initials):_____

CUSTODY SEAL
APPL, Inc. (559) 275-2175
Date 3/17/04
initials SEC

EPA Method 8015B
Total Petroleum Hydrocarbons - Diesel

Sample Data

EPA Method 8015B

Total Petroleum Hydrocarbons – Diesel & Motor Oil

Sample Preparation:

The sample was extracted according to EPA method 3510C.

Analysis Information:

Samples:

The sample was analyzed according to the method using a Hewlett Packard Gas Chromatograph with a flame ionization detector.

Calibrations:

Initial and continuing calibrations were performed according to the method. The system's computer program did not integrate Octacosane in the10µg/L initial calibration standard. The peak was manually integrated for an accurate peak area count. Chromatograms for before and after manual integration are contained in the report. All acceptance criteria were met.

Blanks:

The blank contained motor oil below the reporting limit. The motor oil was reported in the blank and flagged with a "J" as estimated. The sample contained motor oil slightly above the reporting limit. The sample result is flagged with a "B" indicating that motor oil was also found in the blank.

Spikes:

A Laboratory Control Spike (LCS) was used for quality assurance. All spike recoveries were acceptable.

Surrogates

All surrogate recoveries were within control limits.

Summary:

No additional problems were encountered. All data were acceptable

CERTIFICATION

I certify that this data package is in compliance with the terms and conditions of the contract, both technically and for completeness, for other than the conditions detailed above. Release of the hard copy has been authorized by the Laboratory Manager or his designee, as verified by the following signature.

4/14/04

Leonard Fong, Ph.D, Laboratory Director / Date

EPA Method 8015B
Total Petroleum Hydrocarbons (extractable)
Diesel

EPA 8015B TPH Diesel Water

Kleinfelder
10 Shoreham Place
San Diego, CA 92122

APPL Inc.
4203 West Swift Avenue
Fresno, CA 93722

Attn: Stacie Wissler

Project: 41330/2.07 Hunters Point Shipyard

ARF: 43962

Sample ID: IRIDW1Q001

APPL ID: AP66854

Sample Collection Date: 3/17/04

QCG: $DIHP-040323A-73931

Method	Analyte	Result	PQL	MDL	Units	Extraction Date	Analysis Date
EPA 8015B	Diesel Fuel	Not detected	50	40.4	ug/L	3/23/04	3/25/04
EPA 8015B	Motor Oil	520 B	500	106	ug/L	3/23/04	3/25/04
EPA 8015B	Surrogate: Octacosane	124	60-140		%	3/23/04	3/25/04
EPA 8015B	Surrogate: Ortho-Terphenyl	88.8	60-140		%	3/23/04	3/25/04

B = The analyte was found in a method blank, as well as in the sample.

Run #: 28
Instrument: FID02
Sequence: 040324
Dilution Factor: 1
Initials: DB

Printed: 3/30/04 2:34:46 PM
APPL-F1-SC-MCRes/MCPQL

EPA METHOD 8081A
Organochlorine Pesticides

APPL, INC.

EPA Method 8081A
Pesticides

Sample Preparation:

The water sample was extracted according to EPA method 3510C. All holding times were met.

Analysis Information:

Samples:

The sample was analyzed for Pesticides according to EPA method 8081A using a Hewlett Packard GC equipped with an ECD.

Calibrations:

Initial and continuing calibrations were performed according to the method. All acceptance criteria were met.

Blanks:

No target analyte was detected above the reporting limit for the method blanks.

Spikes and Duplicates:

A Laboratory Control Spike (LCS) was used for quality assurance. All acceptance criteria were met.

Surrogates:

All surrogates recovered within acceptance limits.

Summary:

No analytical problems were encountered. All data are acceptable.

CERTIFICATION

I certify that this data package is in compliance with the terms and conditions of the contract, both technically and for completeness, for other than the conditions detailed above. Release of the hard copy has been authorized by the Laboratory Manager or his designee, as verified by the following signature.

4/14/04

Leonard Fong, Ph.D, Laboratory Director / Date

EPA METHOD 8081A
Organochlorine Pesticides
Sample Data

APPL, INC.

EPA 8081A OCL WATER

infelder
5010 Shoreham Place
San Diego, CA 92122

APPL Inc.
4203 West Swift Avenue
Fresno, CA 93722

Attn: Stacie Wissler
Project: 41330/2.07 Hunters Point Shipyard
Sample ID: IRIDW1Q001
Sample Collection Date: 3/17/04

ARF: 43962
APPL ID AP66854
QCG: $81HP-040322B-73936

Method	Analyte	Result	PQL	MDL	Units	Extraction Date	Analysis Date
EPA 8081A	4,4'-DDE	Not detected	0.05	0.004	ug/L	3/22/04	3/23/04
EPA 8081A	4,4'-DDT	Not detected	0.05	0.007	ug/L	3/22/04	3/23/04
EPA 8081A	4,4'-TDE/DDD	Not detected	0.05	0.003	ug/L	3/22/04	3/23/04
EPA 8081A	a-BHC	Not detected	0.05	0.005	ug/L	3/22/04	3/23/04
EPA 8081A	a-Chlordane	Not detected	0.05	0.007	ug/L	3/22/04	3/23/04
EPA 8081A	Aldrin	Not detected	0.05	0.009	ug/L	3/22/04	3/23/04
EPA 8081A	b-BHC	Not detected	0.05	0.008	ug/L	3/22/04	3/23/04
EPA 8081A	d-BHC	Not detected	0.05	0.005	ug/L	3/22/04	3/23/04
EPA 8081A	Dieldrin	Not detected	0.05	0.005	ug/L	3/22/04	3/23/04
EPA 8081A	Endosulfan I	Not detected	0.05	0.005	ug/L	3/22/04	3/23/04
EPA 8081A	Endosulfan II	Not detected	0.05	0.004	ug/L	3/22/04	3/23/04
8081A	Endosulfan sulfate	Not detected	0.05	0.005	ug/L	3/22/04	3/23/04
8081A	Endrin	Not detected	0.05	0.007	ug/L	3/22/04	3/23/04
EPA 8081A	Endrin aldehyde	Not detected	0.05	0.009	ug/L	3/22/04	3/23/04
EPA 8081A	Endrin ketone	Not detected	0.05	0.006	ug/L	3/22/04	3/23/04
EPA 8081A	g-BHC (Lindane)	Not detected	0.05	0.005	ug/L	3/22/04	3/23/04
EPA 8081A	g-Chlordane	Not detected	0.05	0.006	ug/L	3/22/04	3/23/04
EPA 8081A	Heptachlor	Not detected	0.05	0.008	ug/L	3/22/04	3/23/04
EPA 8081A	Heptachlor epoxide	Not detected	0.05	0.007	ug/L	3/22/04	3/23/04
EPA 8081A	Methoxychlor	Not detected	0.05	0.008	ug/L	3/22/04	3/23/04
EPA 8081A	Toxaphene	Not detected	1.0	0.38	ug/L	3/22/04	3/23/04
EPA 8081A	Surrogate: DECA	72.0	30-150		%	3/22/04	3/23/04
EPA 8081A	Surrogate: TCmX	70.3	30-150		%	3/22/04	3/23/04

Run #: 19
Instrument: ETHEL
Sequence: 040323
Dilution Factor: 1
Initials: SA

Printed: 4/13/04 11:18:08 AM
APPL-F1-SC-MCRes/MCPQL

EPA METHOD 8082
PCBs

APPL, INC.

EPA Method 8082

PCBs as Aroclors

Sample Preparation:

The water sample was extracted according to EPA method 3510C. All holding times were met.

Samples:

The sample was analyzed for PCBs as Aroclors according to EPA method 8082 using a Hewlett Packard GC equipped with an ECD.

Calibrations:

Initial and continuing calibrations were performed according to the method. All acceptance criteria were met.

Blanks:

No target analyte was detected above the reporting limits in the method blanks.

Spikes:

A Laboratory Control Spike was used for quality assurance. All acceptance criteria were met.

Surrogates

All surrogate recoveries were within control limits.

Summary:

No problems were encountered. All data were acceptable

CERTIFICATION

I certify that this data package is in compliance with the terms and conditions of the contract, both technically and for completeness, for other than the conditions detailed above. Release of the hard copy has been authorized by the Laboratory Manager or his designee, as verified by the following signature.

4/14/04

Leonard Fong, Ph.D, Laboratory Director / Date

EPA METHOD 8082
PCBs
Sample Data

APPL, INC.

EPA 8082 PCB WATER

Weinfelder
10 Shoreham Place
San Diego, CA 92122

APPL Inc.
4203 West Swift Avenue
Fresno, CA 93722

Attn: Stacie Wissler
Project: 41330/2.07 Hunters Point Shipyard
Sample ID: IRIDW1Q001
Sample Collection Date: 3/17/04

ARF: 43962
APPL ID AP66854
QCG: $8PHP-040322B-73935

Method	Analyte	Result	PQL	MDL	Units	Extraction Date	Analysis Date
EPA 8082	PCB-1016	Not detected	0.5	0.12	ug/L	3/22/04	3/23/04
EPA 8082	PCB-1221	Not detected	0.5	0.08	ug/L	3/22/04	3/23/04
EPA 8082	PCB-1232	Not detected	0.5	0.12	ug/L	3/22/04	3/23/04
EPA 8082	PCB-1242	Not detected	0.5	0.12	ug/L	3/22/04	3/23/04
EPA 8082	PCB-1248	Not detected	0.5	0.09	ug/L	3/22/04	3/23/04
EPA 8082	PCB-1254	Not detected	0.5	0.20	ug/L	3/22/04	3/23/04
EPA 8082	PCB-1260	Not detected	0.5	0.09	ug/L	3/22/04	3/23/04
EPA 8082	Surrogate: DECA-PCB	65.4	30-150		%	3/22/04	3/23/04
EPA 8082	Surrogate: TcMX	72.3	30-150		%	3/22/04	3/23/04

Run #: 19
Instrument: ETHEL
Sequence: 040323
Dilution Factor: 1
Initials: SA

Printed: 4/13/04 11:18:12 AM
APPL-F1-SC-MCRes/MCPQL

EPA METHOD 8260B
Volatile Organic Compounds

APPL, INC.

EPA 8260B

[illegible]infelder
[illegible]0 Shoreham Place
San Diego, CA 92122

Attn: Stacie Wissler

APPL Inc.
4203 West Swift Avenue
Fresno, CA 93722

Project: 41330/2.07 Hunters Point Shipyard
Sample ID: IRIDW1Q001
Sample Collection Date: 3/17/04

ARF: 43962
APPL ID AP66854
QCG: $86HP-040318AM-73736

Method	Analyte	Result	PQL	MDL	Units	Extraction Date	Analysis Date
EPA 8260B	1,1,1,2-Tetrachloroethane	Not detected	0.5	0.13	ug/L	3/18/04	3/18/04
EPA 8260B	1,1,1-Trichloroethane	Not detected	0.5	0.14	ug/L	3/18/04	3/18/04
EPA 8260B	1,1,2,2-Tetrachloroethane	Not detected	0.5	0.27	ug/L	3/18/04	3/18/04
EPA 8260B	1,1,2-Trichloroethane	Not detected	0.5	0.2	ug/L	3/18/04	3/18/04
EPA 8260B	1,1-Dichloroethane	Not detected	1	0.19	ug/L	3/18/04	3/18/04
EPA 8260B	1,1-Dichloroethene	Not detected	0.5	0.30	ug/L	3/18/04	3/18/04
EPA 8260B	1,2,3-Trichloropropane	Not detected	1	0.39	ug/L	3/18/04	3/18/04
EPA 8260B	1,2,4-Trichlorobenzene	Not detected	0.5	0.21	ug/L	3/18/04	3/18/04
EPA 8260B	1,2-Dibromo-3-Chloropropane	Not detected	2	0.76	ug/L	3/18/04	3/18/04
EPA 8260B	1,2-Dichlorobenzene	Not detected	0.5	0.17	ug/L	3/18/04	3/18/04
EPA 8260B	1,2-Dichloroethane	Not detected	0.5	0.14	ug/L	3/18/04	3/18/04
EPA 8260B	1,2-Dichloropropane	Not detected	0.5	0.17	ug/L	3/18/04	3/18/04
EPA 8260B	1,3-Dichlorobenzene	Not detected	0.5	0.11	ug/L	3/18/04	3/18/04
EPA 8260B	1,4-Dichlorobenzene	Not detected	0.5	0.19	ug/L	3/18/04	3/18/04
EPA 8260B	Benzene	0.17 J	0.5	0.16	ug/L	3/18/04	3/18/04
EPA 8260B	Bromobenzene	Not detected	0.5	0.16	ug/L	3/18/04	3/18/04
EPA 8260B	Bromodichloromethane	Not detected	0.5	0.14	ug/L	3/18/04	3/18/04
EPA 8260B	Bromoform	Not detected	0.5	0.14	ug/L	3/18/04	3/18/04
EPA 8260B	Bromomethane	Not detected	1	0.24	ug/L	3/18/04	3/18/04
EPA 8260B	Carbon tetrachloride	Not detected	0.5	0.10	ug/L	3/18/04	3/18/04
EPA 8260B	Chlorobenzene	Not detected	0.5	0.21	ug/L	3/18/04	3/18/04
EPA 8260B	Chloroethane	Not detected	0.5	0.21	ug/L	3/18/04	3/18/04
EPA 8260B	Chloroform	1.2	0.5	0.16	ug/L	3/18/04	3/18/04
EPA 8260B	Chloromethane	Not detected	0.5	0.31	ug/L	3/18/04	3/18/04
EPA 8260B	cis-1,2-Dichloroethene	Not detected	0.5	0.16	ug/L	3/18/04	3/18/04
EPA 8260B	cis-1,3-Dichloropropene	Not detected	0.5	0.15	ug/L	3/18/04	3/18/04
EPA 8260B	Dibromochloromethane	Not detected	0.5	0.19	ug/L	3/18/04	3/18/04
EPA 8260B	Dibromomethane	Not detected	0.5	0.20	ug/L	3/18/04	3/18/04
EPA 8260B	Dichlorodifluoromethane	Not detected	1	0.19	ug/L	3/18/04	3/18/04
EPA 8260B	Ethyl benzene	Not detected	0.5	0.23	ug/L	3/18/04	3/18/04
EPA 8260B	Freon-113	Not detected	0.5	0.21	ug/L	3/18/04	3/18/04

J = Estimated value, below quantitation limit.

Run #: 0318M20
Instrument: Max
Sequence: M040317
Dilution Factor: 1
Initials: SM

Printed: 4/13/04 11:18:08 AM
APPL-F1-SC-MCRes/MCPQL

EPA 8260B

Kleinfelder
5010 Shoreham Place
San Diego, CA 92122

APPL Inc.
4203 West Swift Avenue
Fresno, CA 93722

Attn: Stacie Wissler
Project: 41330/2.07 Hunters Point Shipyard
Sample ID: IRIDW1Q001
Sample Collection Date: 3/17/04

ARF: 43962
APPL ID AP66854
QCG: $86HP-040318AM-73736

Method	Analyte	Result	PQL	MDL	Units	Extraction Date	Analysis Date
EPA 8260B	Methylene chloride	Not detected	5	0.35	ug/L	3/18/04	3/18/04
EPA 8260B	MTBE	0.26 J	0.5	0.19	ug/L	3/18/04	3/18/04
EPA 8260B	Tetrachloroethene	0.32 J	0.5	0.15	ug/L	3/18/04	3/18/04
EPA 8260B	Toluene	0.71	0.5	0.17	ug/L	3/18/04	3/18/04
EPA 8260B	trans-1,2-Dichloroethene	Not detected	0.5	0.19	ug/L	3/18/04	3/18/04
EPA 8260B	trans-1,3-Dichloropropene	Not detected	0.5	0.18	ug/L	3/18/04	3/18/04
EPA 8260B	Trichloroethene	0.19 J	0.5	0.16	ug/L	3/18/04	3/18/04
EPA 8260B	Trichlorofluoromethane	Not detected	0.5	0.24	ug/L	3/18/04	3/18/04
EPA 8260B	Vinyl chloride	Not detected	0.5	0.23	ug/L	3/18/04	3/18/04
EPA 8260B	Xylenes	0.88	0.5	0.19	ug/L	3/18/04	3/18/04
EPA 8260B	Surrogate Recovery (BFB)	109	86-115		%	3/18/04	3/18/04
EPA 8260B	Surrogate Recovery (DCA)	101	76-114		%	3/18/04	3/18/04
EPA 8260B	Surrogate Recovery (TOL)	101	88-110		%	3/18/04	3/18/04

J = Estimated value, below quantitation limit.

Run #: 0318M20
Instrument: Max
Sequence: M040317
Dilution Factor: 1
Initials: SM

Printed: 4/13/04 11:18:09 AM
APPL-F1-SC-MCRes/MCPQL

EPA METHOD 8260B
Volatile Organic Compounds
Sample Data

APPL, INC.

EPA Method 8260B

Volatile Organic Analysis

Sample Preparation:

The water samples were purged according to EPA method 5030B.

Samples:

The samples were analyzed according to the method using a Hewlett Packard Gas Chromatograph with a mass spectrometer detector.

Calibrations:

An initial calibration was performed according to the method. All calibration criteria were met. The computer integrated the wrong peak for 1,3-Dichlorobenzene for the 0.5µg/L initial calibration performed on Max sequence M040317. The peak was manually integrated for an accurate peak area count. Chromatograms for before and after manual integration are contained in the report.

Blanks:

No target analyte was detected above the reporting limits in the method blank.

Spikes:

A Laboratory Control Spike (LCS) was used for quality assurance. A second-source standard was used for the LCS. All spike recovery criteria were met.

Surrogates

All surrogate recoveries were within control limits.

Tuning:

The instrument was tuned using BFB. All method criteria were met.

Internal Standards

The internal standard area counts were compared to the mid-point of the initial calibration according to method 8260. All method criteria were met.

Summary:

No problems were encountered. All data were acceptable

CERTIFICATION

I certify that this data package is in compliance with the terms and conditions of the contract, both technically and for completeness, for other than the conditions detailed above. Release of the hard copy has been authorized by the Laboratory Manager or his designee, as verified by the following signature.

4/14/04

Leonard Fong, Ph.D, Laboratory Director / Date

EPA METHOD 8270C
Semivolatile Organic Compounds

4203 West Swift ∇ Fresno, California 93722 ∇ Phone 559-275-2175 ∇ Fax 559-275-4422

Case Narrative

ARF: 43962

Project: 41330 Hunters Point Shipyard

State Certification Number: CA1312

Results in this report apply to the samples analyzed in accordance with the chain of custody document. This analytical report must be reproduced in its entirety.

Sample Receipt Information:

The sample group was received March 18, 2004, at 6°C. The samples were assigned Analytical Request Form (ARF) number 43962. The sample numbers and requested analyses were compared to the chain of custody. TPH gas analysis was added to the trip blank via telephone by Sarah, March 19, 2004. Amended chains of custody with corrected sample identifications were received via fax March 25, 2004 and via email March 29, 2004. The client IDs in the sample table below reflect the client's changes. The amended chains of custody, the facsimile and email are included in the raw data section of this package.

Sample Table

CLIENT ID	APPL ID	Matrix	Date Sampled	Date Received
IRIDW1Q001	AP66854	Water	3-17-04	3-18-04
IDWTB001	AP66855	Water	3-17-04	3-18-04

EPA Method 8270C

Sample Preparation:

The water sample was extracted according to EPA method 3510C. All holding times were met.

Analysis Information:

Samples:

The sample was analyzed according to EPA Method 8270C using a Hewlett Packard GC/MS.

Quality Control/Assurance

Spike Recovery

A Laboratory Control Spike (LCS) was used for quality assurance. All spike recoveries were acceptable.

Method blanks

No target compound was detected at or above the reporting level.

Surrogates

All surrogate recoveries were within control limits.

Calibration

The initial calibration met method acceptance criteria. The system's computer program did not separate Benzo (b) fluoranthene and Benzo (k) fluoranthene in the 100ug/L initial calibration standard. These peaks were manually integrated for an accurate peak area count. Chromatograms for before and after manual integration are contained in the report.

Tuning:

The instrument was tuned using DFTPP. All method criteria were met.

Internal Standards

The internal standard area counts were compared to the mid-point of the initial calibration according to method 8270. All method criteria were met.

Summary:

No other problems were encountered. The data generated are acceptable.

CERTIFICATION

I certify that this data package is in compliance with the terms and conditions of the contract, both technically and for completeness, for other than the conditions detailed above. Release of the hard copy has been authorized by the Laboratory Manager or his designee, as verified by the following signature.

4/14/04

Leonard Fong, Ph.D, Laboratory Director / Date

EPA METHOD 8270C
Semivolatile Organic Compounds
Sample Data

EPA 8270C

nfelder
5010 Shoreham Place
San Diego, CA 92122

APPL Inc.
4203 West Swift Avenue
Fresno, CA 93722

Attn: Stacie Wissler
Project: 41330/2.07 Hunters Point Shipyard
Sample ID: IRIDW1Q001
Sample Collection Date: 3/17/04

ARF: 43962
APPL ID AP66854
QCG: $87HP-040319A-73790

Method	Analyte	Result	PQL	MDL	Units	Extraction Date	Analysis Date
EPA 8270C	1,2,4-Trichlorobenzene	Not detected	10	1.3	ug/L	3/19/04	3/22/04
EPA 8270C	1,2-DCB	Not detected	10	1.1	ug/L	3/19/04	3/22/04
EPA 8270C	1,3-DCB	Not detected	10	1.0	ug/L	3/19/04	3/22/04
EPA 8270C	1,4-DCB	Not detected	10	1.0	ug/L	3/19/04	3/22/04
EPA 8270C	2,4,6-Trichlorophenol	Not detected	10	2.5	ug/L	3/19/04	3/22/04
EPA 8270C	2,4-Dichlorophenol	Not detected	10	2.5	ug/L	3/19/04	3/22/04
EPA 8270C	2,4-Dimethylphenol	Not detected	10	2.4	ug/L	3/19/04	3/22/04
EPA 8270C	2,4-Dinitrophenol	Not detected	50	1.8	ug/L	3/19/04	3/22/04
EPA 8270C	2,4-DNT	Not detected	10	2.7	ug/L	3/19/04	3/22/04
EPA 8270C	2,6-DNT	Not detected	10	2.7	ug/L	3/19/04	3/22/04
EPA 8270C	2-Chloronaphthalene	Not detected	10	2.0	ug/L	3/19/04	3/22/04
8270C	2-Chlorophenol	Not detected	10	2.0	ug/L	3/19/04	3/22/04
8270C	2-Methylnaphthalene	Not detected	10	1.8	ug/L	3/19/04	3/22/04
EPA 8270C	2-Methylphenol	Not detected	10	1.9	ug/L	3/19/04	3/22/04
EPA 8270C	2-Nitrophenol	Not detected	10	2.1	ug/L	3/19/04	3/22/04
EPA 8270C	3,3'-Dichlorobenzidine	Not detected	20	3.0	ug/L	3/19/04	3/22/04
EPA 8270C	4,6-Dinitro-2-methylphenol	Not detected	50	2.2	ug/L	3/19/04	3/22/04
EPA 8270C	4-Bromophenyl phenyl ether	Not detected	10	2.6	ug/L	3/19/04	3/22/04
EPA 8270C	4-Chloro-3-methylphenol	Not detected	20	2.6	ug/L	3/19/04	3/22/04
EPA 8270C	4-Chlorophenyl phenyl ether	Not detected	10	2.6	ug/L	3/19/04	3/22/04
EPA 8270C	4-Methylphenol	Not detected	10	1.7	ug/L	3/19/04	3/22/04
EPA 8270C	4-Nitrophenol	Not detected	50	0.8	ug/L	3/19/04	3/22/04
EPA 8270C	Acenaphthene	Not detected	10	2.3	ug/L	3/19/04	3/22/04
EPA 8270C	Acenaphthylene	Not detected	10	2.3	ug/L	3/19/04	3/22/04
EPA 8270C	Anthracene	Not detected	10	2.8	ug/L	3/19/04	3/22/04
EPA 8270C	Benz (a) anthracene	Not detected	10	2.6	ug/L	3/19/04	3/22/04
EPA 8270C	Benzo (a) pyrene	Not detected	10	2.5	ug/L	3/19/04	3/22/04
EPA 8270C	Benzo (b) fluoranthene	Not detected	10	2.9	ug/L	3/19/04	3/22/04
EPA 8270C	Benzo (g,h,I) perylene	Not detected	10	2.5	ug/L	3/19/04	3/22/04
EPA 8270C	Benzo (k) fluoranthene	Not detected	10	2.9	ug/L	3/19/04	3/22/04
EPA 8270C	Benzoic acid	Not detected	50	1.0	ug/L	3/19/04	3/22/04

Run #: L032214
Instrument: Linus
Sequence: L040310
Dilution Factor: 1
Initials: MA

Printed: 4/13/04 11:18:09 AM
APPL-F1-SC-MCRes/MCPQL

EPA 8270C

Kleinfelder
5010 Shoreham Place
San Diego, CA 92122

APPL Inc.
4203 West Swift Avenue
Fresno, CA 93722

Attn: Stacie Wissler
Project: 41330/2.07 Hunters Point Shipyard
Sample ID: IRIDW1Q001
Sample Collection Date: 3/17/04

ARF: 43962
APPL ID AP66854
QCG: $87HP-040319A-73790

Method	Analyte	Result	PQL	MDL	Units	Extraction Date	Analysis Date
EPA 8270C	Benzyl alcohol	Not detected	20	2.0	ug/L	3/19/04	3/22/04
EPA 8270C	Bis (2-chloroethoxy) methane	Not detected	10	2.4	ug/L	3/19/04	3/22/04
EPA 8270C	Bis (2-chloroethyl) ether	Not detected	10	2.2	ug/L	3/19/04	3/22/04
EPA 8270C	Bis (2-chloroisopropyl) ether	Not detected	10	2.0	ug/L	3/19/04	3/22/04
EPA 8270C	Bis (2-ethylhexyl) phthalate	Not detected	5	2.9	ug/L	3/19/04	3/22/04
EPA 8270C	Butyl benzylphthalate	Not detected	10	2.8	ug/L	3/19/04	3/22/04
EPA 8270C	Chrysene	Not detected	10	2.8	ug/L	3/19/04	3/22/04
EPA 8270C	Di-n-butylphthalate	Not detected	10	3.2	ug/L	3/19/04	3/22/04
EPA 8270C	Di-n-octylphthalate	Not detected	10	2.6	ug/L	3/19/04	3/22/04
EPA 8270C	Dibenz (a,h) anthracene	Not detected	10	2.5	ug/L	3/19/04	3/22/04
EPA 8270C	Dibenzofuran	Not detected	10	2.4	ug/L	3/19/04	3/22/04
EPA 8270C	Diethyl phthalate	Not detected	10	3.0	ug/L	3/19/04	3/22/04
EPA 8270C	Dimethyl phthalate	Not detected	10	2.9	ug/L	3/19/04	3/22/04
EPA 8270C	Fluoranthene	Not detected	10	2.9	ug/L	3/19/04	3/22/04
EPA 8270C	Fluorene	Not detected	10	2.5	ug/L	3/19/04	3/22/04
EPA 8270C	Hexachlorobenzene	Not detected	10	2.7	ug/L	3/19/04	3/22/04
EPA 8270C	Hexachlorobutadiene	Not detected	10	0.9	ug/L	3/19/04	3/22/04
EPA 8270C	Hexachlorocyclopentadiene	Not detected	10	0.8	ug/L	3/19/04	3/22/04
EPA 8270C	Hexachloroethane	Not detected	5	0.8	ug/L	3/19/04	3/22/04
EPA 8270C	Indeno (1,2,3-cd) pyrene	Not detected	10	2.4	ug/L	3/19/04	3/22/04
EPA 8270C	Isophorone	Not detected	10	2.5	ug/L	3/19/04	3/22/04
EPA 8270C	n-Nitrosodi-n-propylamine	Not detected	10	2.2	ug/L	3/19/04	3/22/04
EPA 8270C	n-Nitrosodimethylamine	Not detected	10	1.7	ug/L	3/19/04	3/22/04
EPA 8270C	n-Nitrosodiphenylamine	Not detected	10	2.7	ug/L	3/19/04	3/22/04
EPA 8270C	Naphthalene	Not detected	10	1.8	ug/L	3/19/04	3/22/04
EPA 8270C	Nitrobenzene	Not detected	10	2.1	ug/L	3/19/04	3/22/04
EPA 8270C	Pentachlorophenol	Not detected	5	2.8	ug/L	3/19/04	3/22/04
EPA 8270C	Phenanthrene	Not detected	10	2.7	ug/L	3/19/04	3/22/04
EPA 8270C	Phenol	Not detected	5	1.0	ug/L	3/19/04	3/22/04
EPA 8270C	Pyrene	Not detected	10	2.8	ug/L	3/19/04	3/22/04
EPA 8270C	Surrogate recovery (2FP)	46.7	21-110		%	3/19/04	3/22/04
EPA 8270C	Surrogate recovery (FBP)	60.3	43-116		%	3/19/04	3/22/04

Run #: L032214
Instrument: Linus
Sequence: L040310
Dilution Factor: 1
Initials: MA

Printed: 4/13/04 11:18:10 AM
APPL-F1-SC-MCRes/MCPQL

EPA 8270C

infelder
5010 Shoreham Place
San Diego, CA 92122

APPL Inc.
4203 West Swift Avenue
Fresno, CA 93722

Attn: Stacie Wissler

Project: 41330/2.07 Hunters Point Shipyard

ARF: 43962

Sample ID: IRIDW1Q001

APPL ID AP66854

Sample Collection Date: 3/17/04

QCG: $87HP-040319A-73790

Method	Analyte	Result	PQL	MDL	Units	Extraction Date	Analysis Date
EPA 8270C	Surrogate recovery (NBZ)	68.3	35-114		%	3/19/04	3/22/04
EPA 8270C	Surrogate recovery (PHL)	32.8	10-110		%	3/19/04	3/22/04
EPA 8270C	Surrogate recovery (TBP)	71.1	10-123		%	3/19/04	3/22/04
EPA 8270C	Surrogate recovery (TPH)	64.1	33-141		%	3/19/04	3/22/04

Run #: L032214
Instrument: Linus
Sequence: L040310
Dilution Factor: 1
Initials: MA

Printed: 4/13/04 11:18:12 AM
APPL-F1-SC-MCRes/MCPQL

METALS

APPL, INC.

EPA Methods 6010B and 7470A
Metals

Digestion Information:

The water was digested according to EPA methods 3010A and 7470A. No exceptions were encountered. All holding times were met.

Analysis Information:

Samples:

The sample was analyzed for total and dissolved metals according to EPA method 6010B using a Perkin Elmer Optima 4300DV and according to EPA 7470A using a Perkin Elmer AAnalyst 300. The sample required dilutions of 4, 25, and 50 to bring the target analytes within calibration range.

Calibrations:

Calibrations were performed according to the methods for the initial calibration and the initial calibration verification. The initial calibration verification is prepared from a second source standard.

Blanks:

No target metals were detected above the reporting limits in the method blank.

Spikes:

Laboratory Control Spikes (LCS) and Laboratory Control Spike Duplicates (LCSD) were used for quality assurance. Recoveries were within acceptance limits.

Summary:

No analytical exceptions are noted. All data are acceptable.

CERTIFICATION

I certify that this data package is in compliance with the terms and conditions of the contract, both technically and for completeness, for other than the conditions detailed above. Release of the hard copy has been authorized by the Laboratory Manager or his designee, as verified by the following signature.

Leonard Fong 4/14/04

Leonard Fong, Ph.D, Laboratory Director / Date

METALS

Sample Data

APPL, INC.

Metals Analysis

nfelder
0 Shoreham Place
San Diego, CA 92122

APPL Inc.
4203 West Swift Avenue
Fresno, CA 93722

Attn: Stacie Wissler

Project: 41330/2.07 Hunters Point Shipyard

ARF: 43962

Sample ID: IRIDW1Q001

APPL ID: AP66854

Sample Collection Date: 3/17/04

Method	Analyte	Result	PQL	MDL	Units	Prep Date	Analysis Date
6010B	Aluminum (Al)	619000 E	100	19.3	ug/L	3/19/04	3/31/04
6010B	Aluminum (Al)	723000	2500	483	ug/L	3/19/04	3/31/04
6010B	Antimony (Sb)	132	5	1.84	ug/L	3/19/04	3/31/04
6010B	Arsenic (As)	225	5	2.45	ug/L	3/19/04	3/31/04
6010B	Barium (Ba)	17800 E	5	0.75	ug/L	3/19/04	3/31/04
6010B	Barium (Ba)	23800	125	19	ug/L	3/19/04	3/31/04
6010B	Beryllium (Be)	21.1	2	0.24	ug/L	3/19/04	3/31/04
6010B	Cadmium (Cd)	1.5 J	5	0.51	ug/L	3/19/04	3/31/04
6010B	Chromium (Cr)	2720 E	5	4.85	ug/L	3/19/04	3/31/04
6010B	Chromium (Cr)	3110	20	19	ug/L	3/19/04	3/23/04
6010B	Cobalt (Co)	766	5	0.63	ug/L	3/19/04	3/31/04
0B	Copper (Cu)	3800 E	5	0.97	ug/L	3/19/04	3/31/04
6010B	Copper (Cu)	3980	20	3.9	ug/L	3/19/04	3/23/04
6010B	Lead (Pb)	377	5	1.85	ug/L	3/19/04	3/31/04
6010B	Manganese (Mn)	74500 E	5	1.23	ug/L	3/19/04	3/31/04
6010B	Manganese (Mn)	95700	250	62	ug/L	3/19/04	3/23/04
7470A	Mercury (Hg)	0.3	0.2	0.041	ug/L	3/30/04	3/31/04
6010B	Nickel (Ni)	3780 E	5	3.61	ug/L	3/19/04	3/31/04
6010B	Nickel (Ni)	4440	20	14	ug/L	3/19/04	3/23/04
6010B	Selenium (Se)	20.7	5	3.17	ug/L	3/19/04	3/31/04
6010B	Silver (Ag)	60.7	1	0.73	ug/L	3/19/04	3/31/04
6010B	Thallium (Tl)	Not detected	5	1.97	ug/L	3/19/04	3/31/04
6010B	Zinc (Zn)	2140 E	50	31.8	ug/L	3/19/04	3/31/04
6010B	Zinc (Zn)	2580	200	127	ug/L	3/19/04	3/23/04

Estimated value, below quantitation limit.
E = The reported value exceeds linear range.

Printed: 4/12/04 4:05:49 PM

APPL-F1-SC-MCRes/MCPQL

EPA METHOD 5030/8015
TPH Gasoline

EPA Method 8015B
Total Petroleum Hydrocarbons - Gasoline

Sample Preparation:

The samples were purged according to EPA method 5030B.

Analysis Information:

Samples:

The samples were analyzed according to the method using a Hewlett Packard Gas Chromatograph with a PID/FID detector.

Calibrations:

Initial and continuing calibrations were performed according to the method. All acceptance criteria were met.

Blanks:

The blank contained no target analyte at or above the reporting limits.

Spikes:

A Laboratory Control Spike (LCS) was used for quality assurance. All acceptance criteria were met.

Surrogates

All surrogate recoveries were within control limits.

Summary:

No problems were encountered. All data were acceptable.

CERTIFICATION

I certify that this data package is in compliance with the terms and conditions of the contract, both technically and for completeness, for other than the conditions detailed above. Release of the hard copy has been authorized by the Laboratory Manager or his designee, as verified by the following signature.

4/14/04

Leonard Fong, Ph.D, Laboratory Director / Date

EPA METHOD 5030/8015
TPH Gasoline

Sample Data

Gas-Water

Kleinfelder
10 Shoreham Place
San Diego, CA 92122

Attn: Stacie Wissler

Project: 41330/2.07 Hunters Point Shipyard

Sample ID: IRIDW1Q001

Sample Collection Date: 3/17/04

APPL Inc.
4203 West Swift Avenue
Fresno, CA 93722

ARF: 43962

APPL ID: AP66854

QCG: $GAHP-040322A-73903

Method	Analyte	Result	PQL	MDL	Units	Extraction Date	Analysis Date
8015	Gasoline	Not detected	20	8.6	ug/L	3/22/04	3/22/04
8015	Surrogate-BFB	108	75-125		%	3/22/04	3/22/04

Run #:	32215.D
Instrument:	HARPO
Sequence:	040308
Dilution Factor:	1
Initials:	CH

Printed: 3/30/04 2:25:25 PM
APPL-F1-SC-MCRes/MCPQL

INORGANIC ANALYSIS

APPL, INC.

EPA Methods 160.2, 376.1, SW846 9010B/9014, and SW846 9045C

Total Suspended Solids, Sulfide, Cyanide, and pH

Sample Preparation Information:

The water was prepared and analyzed according to the methods. For the SW846 9010B distillation, the sample was preserved with Sodium Hydroxide and Zinc Acetate; Sodium Hydroxide is the correct preservative. For the EPA 376.1 analysis, the sample had a significant amount of sediment. All holding times were met.

Analysis Information:

Samples:

The samples were analyzed according to the methods. The sample required a dilution factor of 10 for the EPA 160.2 analysis.

Calibrations:

Calibrations were performed according to the methods for the initial calibration and the initial calibration verification. The initial calibration verification is prepared from a second source standard.

Blanks:

No target analyte was detected above the reporting limits in the method blanks.

Spikes:

Laboratory Control Spikes (LCS) were used for quality assurance. Recoveries were within acceptance limits.

Summary:

No other analytical exceptions are noted. All data are acceptable.

CERTIFICATION

I certify that this data package is in compliance with the terms and conditions of the contract, both technically and for completeness, for other than the conditions detailed above. Release of the hard copy has been authorized by the Laboratory Manager or his designee, as verified by the following signature.

4/14/04

Leonard Fong, Ph.D, Laboratory Director / Date

Wet Lab Analysis

'nfelder
0 Shoreham Place
San Diego, CA 92122

APPL Inc.
4203 West Swift Avenue
Fresno, CA 93722

Attn: Stacie Wissler

Project: 41330/2.07 Hunters Point Shipyard

Sample ID: IRIDW1Q001

Sample Collection Date: 3/17/04

APPL ID: AP66854

ARF: 43962

Method	Analyte	Result	PQL	MDL	Units	Prep Date	Analysis Date
9010B/9014	Cyanide	Not detected	10	5.0	ug/L	3/29/04	3/30/04
EPA 160.2	Total Suspended Solids	12330	100.000	11.80	mg/L	3/19/04	3/19/04
EPA 376.1	Sulfide	Not detected	1.0	0.60	mg/L	3/23/04	3/23/04
EPA 9045C	pH	8.6 @ 21.0	NA	NA	pH Units	3/18/04	3/18/04

Printed: 4/12/04 10:42:15 AM

APPL-F1-SC-MCRes/MCPQL

1[illegible] South 13th Avenue P.O. Box 479 Kelso, Washington 98626 (360) 577-7222 ph (360) 636-1068 fax

Columbia Analytical Services INC.
An Employee - Owned Company

RECEIVED
APR 1 2 2004
BY:_____

April 7, 2004 Service Request No: K2402103

Sue Bonds
APPL, Inc.
4203 W. Swift Avenue
Fresno, CA 93722

RE: 43962

Dear Sue:

Enclosed are the results of the sample(s) submitted to our laboratory on March 23, 2004. For your reference, these analyses have been assigned our service request number K2402103.

All analyses were performed according to our laboratory's quality assurance program. The test results meet requirements of the NELAC standards except as noted in the case narrative report. All results are intended to be considered in their entirety, and Columbia Analytical Services, Inc. (CAS) is not responsible for use of less than the complete report. Results apply only to the items submitted to the laboratory for analysis and individual items (samples) analyzed, as listed in the report.

Please call if you have any questions. My extension is 3260.

Respectfully submitted,

Columbia Analytical Services, Inc.

Harvey Jacky
Project Chemist

HJ/jeb

Acronyms

ASTM	American Society for Testing and Materials
A2LA	American Association for Laboratory Accreditation
CARB	California Air Resources Board
CAS Number	Chemical Abstract Service registry Number
CFC	Chlorofluorocarbon
CFU	Colony-Forming Unit
DEC	Department of Environmental Conservation
DEQ	Department of Environmental Quality
DHS	Department of Health Services
DOE	Department of Ecology
DOH	Department of Health
EPA	U. S. Environmental Protection Agency
ELAP	Environmental Laboratory Accreditation Program
GC	Gas Chromatography
GC/MS	Gas Chromatography/Mass Spectrometry
LUFT	Leaking Underground Fuel Tank
M	Modified
MCL	Maximum Contaminant Level is the highest permissible concentration of a substance allowed in drinking water as established by the USEPA.
MDL	Method Detection Limit
MPN	Most Probable Number
MRL	Method Reporting Limit
NA	Not Applicable
NC	Not Calculated
NCASI	National Council of the Paper Industry for Air and Stream Improvement
ND	Not Detected
NIOSH	National Institute for Occupational Safety and Health
PQL	Practical Quantitation Limit
RCRA	Resource Conservation and Recovery Act
SIM	Selected Ion Monitoring
TPH	Total Petroleum Hydrocarbons
tr	Trace level is the concentration of an analyte that is less than the PQL but greater than or equal to the MDL.

Inorganic Data Qualifiers

* The result is an outlier. See case narrative.

\# The control limit criteria is not applicable. See case narrative.

[illegible] The analyte was found in the associated method blank at a level that is significant relative to the sample result.

L The result is an estimate amount because the value exceeded the instrument calibration range.

J The result is an estimated concentration that is less than the MRL but greater than or equal to the MDL.

U The compound was analyzed for, but was not detected ("Non-detect") at or above the MRL/MDL.

i The MRL/MDL has been elevated due to a matrix interference.

X See case narrative.

Metals Data Qualifiers

\# The control limit criteria is not applicable. See case narrative.

B The result is an estimated concentration that is less than the MRL but greater than or equal to the MDL.

E The percent difference for the serial dilution was greater than 10%, indicating a possible matrix interference in the sample.

M The duplicate injection precision was not met.

N The Matrix Spike sample recovery is not within control limits. See case narrative.

S The reported value was determined by the Method of Standard Additions (MSA).

U The compound was analyzed for, but was not detected ("Non-detect") at or above the MRL/MDL.

W The post-digestion spike for furnace AA analysis is out of control limits, while sample absorbance is less than 50% of spike absorbance.

i The MRL/MDL has been elevated due to a matrix interference.

X See case narrative.

* The duplicate analysis not within control limits. See case narrative.

\+ The correlation coefficient for the MSA is less than 0.995.

Organic Data Qualifiers

* The result is an outlier. See case narrative.

\# The control limit criteria is not applicable. See case narrative.

A A tentatively identified compound, a suspected aldol-condensation product.

B The analyte was found in the associated method blank at a level that is significant relative to the sample result.

C The analyte was qualitatively confirmed using GC/MS techniques, pattern recognition, or by comparing to historical data.

D The reported result is from a dilution.

E The result is an estimate amount because the value exceeded the instrument calibration range.

J The result is an estimated concentration that is less than the MRL but greater than or equal to the MDL.

N The result is presumptive. The analyte was tentatively identified, but a confirmation analysis was not performed.

P The GC or HPLC confirmation criteria was exceeded. The relative percent difference is greater than 40% between the two analytical results (25% for CLP Pesticides).

U The compound was analyzed for, but was not detected ("Non-detect") at or above the MRL/MDL.

i The MRL/MDL has been elevated due to a chromatographic interference.

X See case narrative.

Additional Petroleum Hydrocarbon Specific Qualifiers

F The chromatographic fingerprint of the sample matches the elution pattern of the calibration standard.

L The chromatographic fingerprint of the sample resembles a petroleum product, but the elution pattern indicates the presence of a greater amount of lighter molecular weight constituents than the calibration standard.

H The chromatographic fingerprint of the sample resembles a petroleum product, but the elution pattern indicates the presence of a greater amount of heavier molecular weight constituents than the calibration standard.

[illegible] The chromatographic fingerprint of the sample resembles an oil, but does not match the calibration standard.

Y The chromatographic fingerprint of the sample resembles a petroleum product eluting in approximately the correct carbon range, but the elution pattern does not match the calibration standard.

Z The chromatographic fingerprint does not resemble a petroleum product.

COLUMBIA ANALYTICAL SERVICES, INC.

Client:	Agriculture & Priority Pollutants Labs	**Service Request No.:**	K2402103
Project:	43962	**Date Received:**	3/23/04
Sample Matrix:	Water		

CASE NARRATIVE

All analyses were performed consistent with the quality assurance program of Columbia Analytical Services, Inc. (CAS). This report contains analytical results for samples designated for Tier II data deliverables. When appropriate to the method, method blank results have been reported with each analytical test. Additional quality control analyses reported herein include: Laboratory Duplicate (DUP).

Sample Receipt

One water sample was received for analysis at Columbia Analytical Services on 3/23/04. The sample was received in good condition and consistent with the accompanying chain of custody form. The sample was stored in a refrigerator at 4°C upon receipt at the laboratory.

General Chemistry Parameters

No anomalies associated with the analysis of these samples were observed.

Approved by HK Date 4/7/04

SUBCONTRACT ORDER

APPL, Inc.

RF: [illegible]962 PO: 00-43962 K2402103

N[illegible] LABORATORY:
riculture & Priority Pollutants Laboratories, Inc.
03 W. Swift
esno, CA 93722
one: (559) 275-2175
x: (559) 275-4422
oject Manager:

RECEIVING LABORATORY:
Columbia Analytical - Kelso
1317 S 13th, Box 479
Kelso, WA 98626-2845
Phone: (360) 577-7222x
Fax:

mments:

APPL ID	Sample ID	Matrix	Collected	Analysis	Price
AP66854	IDW-031704	Water	3/17/04	COD by 5520	
		Water	3/17/04	FLASHPOINTby Pensky-Martins	

ele By	Date	Time	Received By	Date	Time
[signature]	3/22/04	1500	Tracy Black CAS	3/23/04	1530
eleased By	Date	Time	Received By	Date	Time

00007

To ensure timely payment, please include the PO number on your invoice

SUBCONTRACT ORDER

APPL, Inc.

ARF: 43962 **PO: 00-43962**

SENDING LABORATORY:
Agriculture & Priority Pollutants Laboratories, Inc.
4203 W. Swift
Fresno, CA 93722
Phone: (559) 275-2175
Fax: (559) 275-4422
Project Manager: R.W.

RECEIVING LABORATORY:
Columbia Analytical - Kelso
1317 S 13th, Box 479
Kelso, WA 98626-2845
Phone: (360) 577-7222x
Fax: 360-636-1068

Comments:

	APPL ID	Sample ID	Matrix	Collected	Analysis	Price
1.	AP66854	~~IDW-031704~~ rp 3-25-04	Water	3/17/04	COD by 5520	
	IRIDW1Q001	~~IDWSW001~~ rp 3-29-04	Water	3/17/04	FLASHPOINTby Pensky-Martins	

Please note change in sample ID.
Please report w/ new sample ID. Thanks; Renée Patterson
3-25-04

- TAT: 2 week prelim / 4 week Final
- Report: DVP IV
- EDD: Navy NEDTS

Please note 2nd ID change
Renee Patterson
3-29-04

Amended

R.W.
3-23-4

ADDED PAGE
00007A

Released By	Date	Time	Received By	Date	Time
	3/22/04	1500			

Released By	Date	Time	Received By	Date	Time

To ensure timely payment, please include the PO number on your invoice

Columbia Analytical Services Inc.
Cooler Receipt and Preservation Form

Project/Client Appl. Work Order K240 2103

Cooler received on 3/23/04 and opened on 3/23/04 by A Jurell

1. Were custody seals on outside of coolers? Y (N)
   If yes, how many and where?
2. Were seals intact and signature & date correct? Y (N)
3. Is the shipper's airbill available and filed? If no, record airbill number: 7911 8722 3829 8201 Y N
4. COC#
   Temperature of cooler(s) upon receipt: 1.0
   Temperature Blank:
5. Were custody papers properly filled out (ink, signed, etc.)? (Y) N
6. Type of packing material present Ice
7. Did all bottles arrive in good condition (unbroken)? (Y) N
8. Were all bottle labels complete (i.e analysis, preservation, etc.)? (Y) N
9. Did all bottle labels and tags agree with custody papers? (Y) N
10. Were the correct types of bottles used for the tests indicated? (Y) N
11. Were all of the preserved bottles received at the lab with the appropriate pH? (Y) N
12. Were VOA vials checked for absence of air bubbles, and if present, noted below? ~~Y~~ ~~N~~
    Did the bottles originate from CAS/K or a branch laboratory? Y (N)
    Are CWA Microbiology samples received with >1/2 the 24hr. hold time remaining from collection? ~~Y~~ ~~N~~
15. Was C12/Res negative? ~~Y~~ ~~N~~

Explain any discrepancies: Bottles are Clients

RESOLUTION:

Samples that required preservation or received out of temperature:

Sample ID	Reagent	Volume	Lot Number	Bottle Type	Rec'd out of Temperature	Initials

COLUMBIA ANALYTICAL SERVICES, INC.

Analytical Report

Client :	Agriculture & Priority Pollutants Labs	Service Request :	K2402103
Project Name :	NA	Date Collected :	03/17/04
Project Number :	43962	Date Received :	03/23/04
Sample Matrix :	WATER		

Chemical Oxygen Demand

Units : mg/L (ppm)
Basis : NA

Analysis Method : 410.2
Test Notes :

Sample Name	Lab Code	MRL	MDL	Dilution Factor	Date Analyzed	Result	Result Notes
AP66854/~~H3WS:W001~~ IRIDW1Q001 rp 4-13-04	K2402103-001	10	6	2	04/01/04	145	
Method Blank	K2402103-MB	5	3	1	04/01/04	5	U

Report By:MFirth

COLUMBIA ANALYTICAL SERVICES, INC.

Analytical Report

Client : Agriculture & Priority Pollutants Labs
Project Name : NA
Project Number : 43962
Sample Matrix : WATER

Service Request : K2402103
Date Collected : 03/17/04
Date Received : 03/23/04

Flash Point

Units : DEG F
Basis : NA

Analysis Method : 1020
Test Notes :

Sample Name	Lab Code	MRL	MDL	Dilution Factor	Date Analyzed	Result	Result Notes
AP66854/~~H3W3W001~~ IRIDW1Q001	K2402103-001	-	-	1	03/24/04	>200	
Method Blank	K2402103-MB	-	-	1	03/24/04	>200	

rp 4.13.04

00014

Report By:MFirth