N00174.AR.000674
NSWC INDIAN HEAD
5090.3a

FINAL TECHNICAL MEMORANDUM PILOT STUDY WORK PLAN AT SITE 47 NSWC INDIAN HEAD MD

4/30/2008

CH2MHILL

Site 47 Pilot Study Work Plan, NSF-IH, Indian Head, Maryland

PREPARED FOR: Dennis Orenshaw/EPA Region III
Curtis DeTore/MDE
Joe Rail/NAVFAC Washington
Shawn Jorgensen/NSF-IH

PREPARED BY: Gunarti Coghlan/CH2M HILL
Elisha French/CH2M HILL

COPIES: Margaret Kasim/CH2M HILL
Scott Saroff/CH2M HILL
Susanne Borchert/CH2M HILL

DATE: April 30, 2008

1 Introduction

This work plan presents the approach for conducting an *in situ* chemical oxidation (ISCO) pilot study at Site 47 (Mercuric Nitrate Disposal Area) at the Naval Support Facility, Indian Head (NSF-IH) in Indian Head, Maryland. The ISCO technology that will be implemented is activated alkaline sodium persulfate.

2 Rationale for the Pilot Study

The primary constituents of concern (COCs) in the shallow groundwater at Site 47 are chlorinated solvents (carbon tetrachloride [CT] and its breakdown products, and tetrachloroethene [PCE] and trichloroethene [TCE] and their breakdown products). It is assumed on the basis of their observed maximum concentrations that CT and PCE are present as residual dense non-aqueous-phase liquid (DNAPL) in the subsurface. In addition to chlorinated solvents, metals such as iron, vanadium, thallium, and cadmium have also been identified as COCs. (A detailed description of the nature and extent of contamination in the shallow groundwater and the determination of COCs is given by CH2M HILL's (2005) preliminary draft feasibility study, hereinafter referred to as the FS).

Because CT is recalcitrant in nature, it is challenging to treat. Current land uses at Site 47—explosives research laboratory and magazines—add to the complexity of the treatment approach. Although the FS identified ISCO and *in situ* chemical reduction (ISCR) technologies for the treatment of CT, it also identified uncertainties with respect to the effectiveness of each group of technology. These uncertainties included the most appropriate oxidant and/or reductant for use, the site-specific demand of the oxidant or reductant, and the most appropriate delivery method of the oxidant or reductant. Bench-scale studies were conducted and completed in May 2007 to partially address these uncertainties and to evaluate the effectiveness of select ISCO and ISCR technologies for the residual DNAPL CT and PCE. The results of the bench-scale studies are presented in

 COPYRIGHT 2008 BY CH2M HILL, INC.

CH2M HILL (2007). The findings of the bench-scale studies concluded that alkaline activated persulfate is the most effective for the treatment of CT and PCE in the shallow aquifer at Site 47. The results for the bench-scale studies and the proposal for a follow on pilot study were presented to the IHIRT during the April 4, 2007, partnering meeting, at which time the IHIRT agreed to the proposed pilot study approach presented herein.

3 Objective

The primary objective of the pilot study is to collect field data that will be used to design the full-scale remedy for the shallow groundwater contamination at Site 47. The specific objectives of the pilot study are the following:

- Gain field data for design parameters such as
  - Oxidant loading (amount of persulfate required to cost-effectively reduce VOCs)
  - Target vertical interval
  - Delivery method
  - Radius of influence
- Assess impacts on current site use
- Assess the compatibility of the source treatment technology with natural attenuation
- Decrease the mass of volatile COCs
- Obtain cost information for the full-scale remedy

4 Pilot Study Approach

4.1 Technology

Based on the results of the bench-scale studies, alkaline activated persulfate will be the oxidant tested in the field through the proposed pilot study for treating residual DNAPL CT and PCE. The bench-scale studies further show that this oxidant is compatible with current site uses.

4.2 Target Area

The proposed area targeted for the pilot study is approximately 3,750 ft^2, a quarter of the total inferred residual DNAPL area of approximately 15,000 ft^2 identified in the FS report (Figure 1). The target area encompasses the locations of monitoring wells IS47MW03 and IS47MW04 where the historical maximum concentrations of CT (100,000 µg/L) and PCE (2,700 µg/L) were observed (CH2M HILL, 2004). The subsurface depth interval targeted for treatment is the shallow aquifer from approximately 6 feet to 18 feet below ground surface (bgs) (Figure 2). Based on an aquifer thickness of 12 feet, an area of 3,750 ft^2, and an assumed porosity of 0.30, the target area is equivalent to approximately 5,200,000 lbs. of soil and 102,000 gallons of groundwater (one pore volume).

Based on the slug tests performed during the predesign investigation, the groundwater velocity within the target area is estimated at 10.68 feet per year and flow is in a southeast direction (CH2M HILL, 2005). Grain size analysis of soil from this area collected during the bench-scale studies indicates that the soil is mostly sand with the following distribution: 80 percent sand, 13 percent silt, and 7 percent clay.

 COPYRIGHT 2007 BY CH2M HILL, INC.

4.3 Pilot Study Design

Oxidant Loading. The theoretical oxidant loading was calculated based on the results of the bench-scale studies and the maximum COC concentration in the groundwater during the remedial investigation. The theoretical loading assumes that the soil oxidant (nontarget) demand and COCs oxidant (target) demand within the pilot study area will be satisfied. The results of the bench-scale studies indicate that the persulfate degradation ratio ranges from 31 to 94 pounds per pound (lbs/lb) of COCs[1] for a range of sodium persulfate concentration of 50 to 200 grams per liter (g/L). The value also accounts for the nontarget demand.[2] Assuming that the target concentration of sodium persulfate at the injection point is 55 g/L, the interpolated degradation ratio is equivalent to 36 lbs/lb. Based on the degradation ratio of 36 lbs/lb of total COCs, the theoretical mass of persulfate required to treat the pilot study area is approximately 35,700 lbs. A safety factor of 25 percent was used to determine the designed amount of oxidant for field application. Sodium hydroxide will be used to activate the persulfate radical. Per the bench-scale study, approximately 20,600 lbs of sodium hydroxide will be required to maintain the pH above 10.5. Further detail on the oxidant loading is presented in Appendix A.

Oxidant Delivery Methods. Alkaline-activated sodium persulfate will be delivered into the subsurface within the target area using pressurized injection in two injection events. The first injection event will satisfy 100 percent of the theoretical oxidant loading within the pilot study area and the second injection event will satisfy 50 percent of the theoretical oxidant loading in the recalcitrant areas within the pilot study area. The target concentration of sodium persulfate at the injection point is 55 g/L. Further detail on the design oxidant loadings for each injection event is presented in Appendix A.

Two injection methods will be evaluated during the pilot study: (1) pressurized injection through 2-inch-diameter permanent injection wells and (2) pressurized injection through direct-push technology (DPT) rod injection points. The primary goals of the comparison of the two oxidant delivery methods are (1) to determine which method produces better distribution around the injection points (radius of influence as well as vertical distribution) and (2) to determine if there are any differences in the field time requirements for each method. Each delivery method has advantages and disadvantages that will be evaluated for the full scale application. Injection through the permanent wells allows higher oxidant volume delivery in a shorter period of time while minimizing the disturbances to the daily activities at the site. The location and screen interval of a permanent injection well are fixed and thus offers less flexibility to target specific areas with oxidants, if needed. DPT injection allows flexibility to target specific area and vertical depth intervals, requires more time typically for setup, and thereby reduces the daily rate of injection volume. The methods will be evaluated during the pilot study to assess the site-specific advantages and disadvantages of each method to better design the full-scale remediation system.

Design, Layout, and Specification of Injection Points. The injection points will be a combination of permanent injection wells and DPT injection points. The permanent injection wells will be installed at the target area closer to Building 856 to minimize the down time

[1] Primarily CT, PCE, TCE at soil total concentration of approximately 200 mg/kg.

[2] To oxidize other natural sources of organic matter and reduced metals in the site-specific soil and if accounted separately it ranges from 5 to 7 g per kilogram of soil.

 COPYRIGHT 2007 BY CH2M HILL, INC.

caused by multiple mobilizations of the DPT injection rig within the proximity of the building, hereinafter referred to as the Northern Cluster. The DPT temporary injection points will be placed on the southern part of the pilot study target area, herein referred to as the Southern Cluster. To evaluate the oxidant distribution associated with each delivery method, the Northern and Southern Clusters will be separated by a minimum distance of 10 feet.

Based on the assumption of injection pore volume of 0.8 to 0.85,[3] the average radius of influence (ROI) of each injection point in the Northern Cluster (permanent) and in the Southern Cluster (temporary) is 10 feet and 7 feet, respectively. The permanent injection wells will be constructed as nested wells to make sure that the oxidant is delivered over the entire interval of 6 to 18 feet bgs. Each nested well will consist of 2 wells that are constructed adjacent to each other; the shallow well will be approximately 12 feet deep with a screened interval from 6 to 12 feet bgs and the deep well will be approximately 18 feet with a screened interval from 12 to 18 feet bgs. The total number of permanent injection wells in the Northern Cluster is 14 (7 shallow wells [IS47IW01S through IS47IW07S] and 7 deep wells [IS47IW01D through IS47IW07D]) and the total number of DPT temporary injection points in the Southern Cluster is 15 (IS47IT01 through IS47IT15). Figure 3 shows the proposed locations of the permanent injection wells and the DPT injection points. Further details on the design, layout, and specifications of the injection points are presented in Appendix A.

Performance Monitoring. The overall performance of ISCO on the target COCs will be assessed based on the results of five monitoring events: (1) baseline event, (2) 2-month post-first-injection event, (3) 6-month post-first-injection event, (4) 2-month post-second-injection event, and (5) 6-month post-second-injection event. Select parameters will also be monitored during each injection event to assess the distribution of the sodium persulfate in the target subsurface. Natural attenuation is considered as part of the final remedy at Site 47; therefore, select natural attenuation parameters will be monitored during the baseline and the two 6-month post-injection monitoring events. Monitoring of these parameters will help assess the impact of the ISCO application on the natural attenuation processes. The details of each monitoring event including the parameters that will be analyzed are described in Section 5. To the extent applicable, the soil and groundwater sampling will be performed in accordance with the NSF-IH Master Project Plans (Tetra Tech NUS, 2004).

For monitoring ISCO performance, six additional monitoring wells (IS47MW20 through IS47MW25) will be installed: three wells in each injection cluster. Each well will be constructed as pre-packed, 1-inch-diameter PVC with a 10-foot, slotted 0.01-inch screen interval (see Figure 3 in Appendix A). These wells, along with the four existing monitoring wells (IS47MW01, IS47MW03, IS47MW04, and IS47MW05) will be used to assess the distribution of the oxidant in the subsurface and treatment effectiveness. Figure 3 shows the proposed locations of the additional monitoring wells.

Precautionary Control for Gas Evolution. The results of the bench-scale studies indicate that both gas and heat evolution associated with the activated sodium persulfate technology was either minimal or inconsequential (CH2M HILL, 2007). Because of the current site use (active storage area for explosives), eight passive soil venting points (IS47SV01 through

[3] Based on the soil type and a target sodium persulfate concentration of 55 g/L.

 COPYRIGHT 2007 BY CH2M HILL, INC.

IS47SV08) will be installed as a precautionary measure. These points will be placed strategically near Building 856 and the magazines to monitor and to provide a pathway for the migration of potential gases that will be generated from the treatment process. Venting points IS47SV01 through IS47SV05 will be used for the pilot study purpose and the remaining three venting points, IS47SV06, IS47SV07, and IS47SV08, will be used in the full-scale implementation of the remedy. Each soil venting point will be approximately 5 feet deep and will be constructed of 5-foot slotted 1-inch PVC screen. Figure 4 shows the proposed locations of the passive soil venting points.

For safety reasons, the explosives in the nearby magazines should be relocated during the oxidant injection activities. In the event that the explosives remain, the passive soil venting points will be used as qualitative monitoring points for soil gas during injection activities. The presence of methane and hydrogen gases, indicated by a low explosive level, will be monitored daily during the injection activities. The need for more frequent qualitative gas monitoring will be determined in the field.

5 Sequence and Schedule of Pilot Study Activities

In support of the pilot study, field activities to be conducted will include the following:

- Mobilization/demobilization
- Installation of permanent injection wells, monitoring wells, and passive soil gas venting points
- Survey well and sample locations
- Baseline monitoring
- First oxidant injection
- 2-month post-injection monitoring
- 6-month post-injection monitoring
- Second oxidant injection
- 2-month post-injection monitoring
- 6-month post-injection monitoring
- Decontamination of sampling equipment
- Investigation-derived waste (IDW) handling

The field activities will be executed following the sequences shown in Figure 5 and the tentative schedule in Figure 6. Because of operations at Site 47, field activities during the pilot study will be closely coordinated with NSF-IH to minimize interference with site operations. Detailed descriptions of field activities are presented below.

5.1 Mobilization/Demobilization

The Navy will verify accessibility of the site because of nearby site operations. Utility clearance will be performed by a CH2M HILL subcontractor before any intrusive activities

 COPYRIGHT 2007 BY CH2M HILL, INC.

are performed. Mobilization includes those activities required for general site conditions, including coordination with the Navy, stakeout of sample locations, and site orientation for field staff. Prior to mobilization, CH2M HILL field personnel will review this Work Plan. Demobilization will consist of following proper decontamination procedures for all personnel and equipment and making sure that the site is left in the condition it was prior to mobilization.

5.2 Installation of Permanent Injection and Monitoring Wells, and Passive Soil Venting Points

During this field event, the following activities will be conducted:

- Fourteen permanent injection wells (IS47IW01S through IS47IW07S and IS47IW01D through IS47IW07D) will be installed at the proposed locations shown on Figure 3 and in accordance with the well details shown on Figure 2 in Appendix A. The wells will be constructed using hollow stem auger (HSA) drilling method.
- In support of the baseline monitoring, 24 saturated soil samples will be collected from the six proposed locations (IS47SB20 through IS47SB25) shown on Figure 3 using DPT method. The boring locations of the saturated soil samples will coincide with and be converted to the proposed locations of the additional permanent monitoring wells.
- Six permanent monitoring wells (IS47MW20 through IS47MW25) will be installed at the at the proposed locations shown on Figure 3 and in accordance with the well details shown on Figure 3 in Appendix A. These wells will be constructed using DPT drilling method.
- Eight passive soil venting points (IS47SV01 through IS47SV08) will be installed at the proposed locations shown on Figure 3 and in accordance with the point details on Figure 5 in Appendix A. These points will be constructed using DPT drilling method.
- Three existing DPT points (IS47BT01, IS47BT04, and IS47BT05) will be over drilled in accordance with the details on Figure 1 in Appendix A to mitigate the potential for oxidant daylighting. As shown in Figure 3, the minimum distance between a permanent injection well and any existing DPT point that was used to collect the saturated soil for the bench-scale studies is 5 feet. If, because of the field condition, the distance between any of the permanent injection wells and any of the existing DPT saturated soil collection locations not mentioned above is less than 5 feet, the existing DPT saturated soil collection locations will be over drilled as per specification shown in Figure 1 in Appendix A.

In the event that a subsurface obstruction is encountered during drilling at a proposed injection or monitoring well or soil venting point location, it will be moved. The minimum distance between any injection well or DPT temporary point and an existing structure or building is 7 feet.

The estimated duration for this field event is 12 working days.

5.3 Survey of Well and Sample Locations

The six newly installed monitoring wells will be surveyed by a Maryland licensed surveyor. The horizontal locations (northing and easting coordinates) of the permanent injection wells,

 COPYRIGHT 2008 BY CH2M HILL, INC.

passive soil venting points, and soil sample locations will be surveyed with a portable Global Positioning System unit. The horizontal locations will be referenced to the 1983 North American datum.

5.4 Baseline Monitoring

For baseline monitoring, the following activities will be performed:

- Collection of saturated soil samples from six locations (IS47SB20 through IS47SB25) for analyses of VOCs, total organic carbon (TOC), and metals. For the analyses of TOC and metals, one composite sample within the interval of 6 to 18 feet bgs will be collected from each sample location. For VOC analysis, four soil samples from a discrete depth/interval within 6 to 18 feet bgs (one sample every three-foot interval) will be collected from each sample location (totaling to 24 samples for six locations) and analyzed for VOCs for vertical concentration profiling. This data together with oxidant distribution and post-treatment data will help assess treatment effectiveness with respect to vertical intervals.
- Collection of groundwater samples from 10 wells, which will consist of 4 existing wells (IS47MW01, IS47MW03, IS47MW04, and IS47MW05) and 6 new wells (IS47MW20 through IS47MW25). The groundwater samples will be analyzed for VOCs, total and dissolved metals, natural attenuation parameters (sulfate, nitrate, sulfide, chloride, alkalinity, ferrous iron, and methane-ethene-ethane [MEE]). Field parameters such as dissolved oxygen (DO), pH, temperature, specific conductance, oxidation-reduction potential (ORP), turbidity, and water level will be measured during well purging and prior to sampling. Sample collection from the new monitoring wells will occur at a minimum 7 days after the wells have been developed.

Table 1 presents the analytical procedures, sample media, number of samples and the frequency at which field quality assurance/quality control (QA/QC) samples will be collected. Table 2 presents the analyses for each soil and groundwater sample, preservation requirements, sample containers, and holding times required for the intended analyses for solid and aqueous samples. Samples will be labeled, handled, documented, packaged, and shipped as detailed in the Master Plans. Analysis of VOC in soil and groundwater will be performed in a 7-day turn around time (TAT). The remaining analyses will be performed in a standard 28-day TAT.

The estimated duration for the groundwater sampling field activities is 5 working days.

5.5 First and Second Oxidant Injections

Injection Activities. A total of approximately 70,400 lbs. of sodium persulfate activated with approximately 31,500 lbs of sodium hydroxide will be delivered into the pilot study target area in two injection events. During the first injection event, 46,200 lbs of the oxidant will be delivered through 14 permanent injection wells (IS47IW01S/D through IS47IW07S/D) and approximately 15 DPT temporary injection points (IS47IT01 through IS47IT15).

The number of permanent injection wells and DPT injection points through which the oxidant will be delivered during the second injection event will be determined based on the results of the first injection event. It is assumed that the target COC mass during the second injection event will be one half of the COC mass targeted during the first injection event;

 COPYRIGHT 2008 BY CH2M HILL, INC.

Approximately, 35,200 lbs of oxidant and 15,750 lbs of sodium hydroxide could be delivered during the second injection event.

Detailed description of the injection activities, monitoring requirement during injection, equipment and material used, material handling, work area layout, and preparation are presented in Section 5.4 in Appendix A.

Performance Monitoring During Injection Events. Within 12 hours after the first injection of the oxidant is completed, continuous profiling of electrical conductivity using a DPT approach will be performed at a minimum of 6 locations within 2 feet of the previous soil boring locations (IS47SB20 through IS47SB25). Conductivity profiling of the subsurface after oxidant injection will show, indirectly, the lateral distribution of the sodium persulfate. The results of the conductivity profile and the VOC concentration profile will be used to assess the performance of the treatment.

Xpert Design and Diagnostics (XDD) of Stratham, NH will be responsible for injecting the oxidant into the subsurface and collecting VOC concentration profile data for the performance monitoring. CH2M HILL will be responsible for performing the conductivity profiling. The approximate durations of the first and second injection events are 15 and 10 working days, respectively. CH2M HILL will provide a designated health and safety site coordinator throughout the duration of the injection activities because of the high volume of chemical handling.

5.6 Post-Injection Monitoring

Post-injection monitoring will be conducted 2 months and 6 months after the first injection; the same monitoring will be done after the second injection. Post-injection monitoring consists of the sampling and analyses of groundwater and/or soil samples for analyses of various parameters, as presented on Tables 1 and 2. The sampling requirements after the second oxidant injection may be reevaluated based on the results of the first injection and the associated post-injection monitoring.

For the 2-month post-injection monitoring following the first and second injection events, only groundwater samples will be collected and analyzed for the same parameters as the baseline monitoring samples, with the exception of the natural attenuation parameters because natural attenuation processes are not likely active 2 months after the oxidant injection (Table 1).

For the 6-month post-injection monitoring following the first and second injection events, groundwater and soil samples will be collected and analyzed for the same parameters as the baseline monitoring (Table 1 and Table 2). The soil samples will be collected adjacent (within 2 feet) to the previous six boring locations sampled during the baseline monitoring. The number of samples and analyses for the soil and groundwater samples will be similar to those for the baseline monitoring.

The estimated field durations of the 2-month and the 6-month post-injection monitoring events are 5 and 10 working days, respectively.

 COPYRIGHT 2007 BY CH2M HILL, INC.

5.7 Decontamination of Sampling Equipment

The procedures for the decontamination of sampling equipment for the soil and groundwater sampling will be performed in accordance with the Master Plans.

5.8 Investigation Derived Waste Handling

All handling and disposal of IDW will be performed in accordance with the Master Plans. IDW generated during filed activities will consist of purge, development, and decontamination water, and soil cuttings. Paper towels used to wipe down equipment, personal protective equipment, and any disposable equipment used during sampling will be disposed in the facility dumpsters.

6 Data Evaluation

Because the data use focuses on technology performance assessment, the analytical results will not undergo a third party data validation process. The soil data will be solely used for assessing the technology performance and will not be used for compliance or risk evaluation purposes. The results that will be obtained from the performance monitoring events (before, during, and after injection) will be used to assess the effectiveness of the technology against the pilot study objectives. In addition, three-dimensional (3-D) plume maps will be created using groundwater monitoring data from the baseline and the 6-month post-oxidant injection monitoring events and existing lithologic data. The plume maps will be created using the C Tech Development Corporation's Environmental Visualization System (EVS) software. The use of EVS software allows for 3-D analysis, visualization and animation, as well as a number of other functionalities to help assess the concentration changes of the target constituents before and after the treatment.

7 Health and Safety

Health and safety procedures will follow those described in the Master Project Plans (Tetra Tech NUS, 2004), CH2M HILL's "Master Health and Safety Plan," and an addendum to CH2M HILL's "Master Health and Safety Plan" that will be developed specifically for the pilot study.

8 Progress and Results Reporting

CH2M HILL will prepare draft and final versions of a technical memorandum documenting the results of the pilot study. At a minimum, the technical memorandum will include the following:

- Description of field activities
- A table showing the injection pressures, volume, and reagent strength at each of the injection point, mass injected per point, and all other field data and observations collected
- Comparison between design and actual injection parameters
- Results of the radius of influence and other parameters monitored during injections
- Impacts of technology on current site use

 COPYRIGHT 2008 BY CH2M HILL, INC.

- Compatibility assessment of the source treatment technology with natural attenuation
- Mass reduction of the target COCs
- Cost information for a full-scale remedy
- Recommendation for implementing the full-scale remedy over the entire site

In addition, CH2M HILL will provide updates on the results of the pilot studies to the extent necessary at partnering meetings and via teleconference calls.

9 References

CH2M HILL. 2002. "Master Health and Safety Plan, Naval District Washington, Indian Head, Indian Head, Maryland."

CH2M HILL. 2005. "Preliminary Draft Feasibility Study for Site 47, Mercuric Nitrate Disposal Area, Naval District Washington, Indian Head, Indian Head, Maryland." June.

CH2M HILL. 2007. "Results of Site 47 Bench-Scale Studies, Naval Support Facility, Indian Head, Indian Head, Indian Head, Maryland – Draft Memorandum." May.

Tetra Tech NUS. 2004. "Master Plans for Installation Restoration Program Environmental Investigations at Naval District Washington, Indian Head, Indian Head, Maryland."

 COPYRIGHT 2007 BY CH2M HILL, INC.

TABLE 1
Summary of Samples for Analysis
Site 47 Pilot Study Work Plan
NSF-IH, Indian Head, Maryland

Analysis and Method	Sample Matrix	Field Samples	Field Duplicates	Equipment Rinsate Blanks*	Field Blanks*	Trip Blanks*	Matrix Spike/ Matrix Spike Duplicate	Total Solid Samples	Total Liquid Samples
Baseline (DPT Soil and MW Groundwater)									
TCL Volatiles by EPA CLP OLM04 (w/ EnCore)	SB	24	3	2	1	2	2	31	5
TAL Metals by EPA CLP ILM04	SB	6	1	2	1		1	9	3
TOC by Lloyd Kahn	SB	6	1	2	1		1	9	3
TCL Volatiles by EPA CLP OLM04	GW	10	1	4	1	4	1		22
TAL Metals by EPA CLP ILM04	GW	10	1	4	1		1		18
Filtered TAL Metals by EPA CLP ILM04	GW	10	1	4			1		17
Chloride, Nitrate, Nitrite, Sulfate by EPA 300.0	GW	10	1	4			1		17
Sulfide by SW-846 9030	GW	10	1	4			1		17
Alkalinity by EPA 310.1	GW	10	1	4			1		17
Ferrous Iron by SM 3500-Fe D	GW	10	1	4			1		17
Dissolved Gases (Methane, Ethane, Ethene) by RSK-175	GW	10	1	4	1	4	1		22
2-Month Post-First Injection (MW Groundwater)									
TCL Volatiles by EPA CLP OLM04	GW	10	1	4	1	4	1		22
TAL Metals by EPA CLP ILM04	GW	10	1	4	1		1		18
Filtered TAL Metals by EPA CLP ILM04	GW	10	1	4			1		17
Chloride, Nitrite, Sulfate by EPA 300.0	GW	10	1	4			1		17
Sulfide by SW-846 9030	GW	10	1	4			1		17
6-Month Post-First Injection (DPT Soil and MW Groundwater)									
TCL Volatiles by EPA CLP OLM04 (w/ EnCore)	SB	24	3	2	1	2	2	31	5
TAL Metals by EPA CLP ILM04	SB	6	1	2	1		1	9	3
TOC by Lloyd Kahn	SB	6	1	2	1		1	9	3
TCL Volatiles by EPA CLP OLM04	GW	10	1	4	1	4	1		22
TAL Metals by EPA CLP ILM04	GW	10	1	4	1		1		18
Filtered TAL Metals by EPA CLP ILM04	GW	10	1	4			1		17
Chloride, Nitrate, Nitrite, Sulfate by EPA 300.0	GW	10	1	4			1		17
Sulfide by SW-846 9030	GW	10	1	4			1		17
Alkalinity by EPA 310.1	GW	10	1	4			1		17
Ferrous Iron by SM 3500-Fe D	GW	10	1	4			1		17
Dissolved Gases (Methane, Ethane, Ethene) by RSK-175	GW	10	1	4	1	4	1		22
2-Month Post-Second Injection (MW Groundwater)									
TCL Volatiles by EPA CLP OLM04	GW	10	1	4	1	4	1		22
TAL Metals by EPA CLP ILM04	GW	10	1	4	1		1		18
Filtered TAL Metals by EPA CLP ILM04	GW	10	1	4			1		17
Chloride, Nitrite, Sulfate by EPA 300.0	GW	10	1	4			1		17
Sulfide by SW-846 9030	GW	10	1	4			1		17
6-Month Post Second-Injection (DPT Soil and MW Groundwater)									
TCL Volatiles by EPA CLP OLM04 (w/ EnCore)	SB	24	3	2	1	2	2	31	5
TAL Metals by EPA CLP ILM04	SB	6	1	2	1		1	9	3
TOC by Lloyd Kahn	SB	6	1	2	1		1	9	3
TCL Volatiles by EPA CLP OLM04	GW	10	1	4	1	4	1		22
TAL Metals by EPA CLP ILM04	GW	10	1	4	1		1		18
Filtered TAL Metals by EPA CLP ILM04	GW	10	1	4			1		17
Chloride, Nitrate, Nitrite, Sulfate by EPA 300.0	GW	10	1	4			1		17
Sulfide by SW-846 9030	GW	10	1	4			1		17
Alkalinity by EPA 310.1	GW	10	1	4			1		17
Ferrous Iron by SM 3500-Fe D	GW	10	1	4			1		17
Dissolved Gases (Methane, Ethane, Ethene) by RSK-175	GW	10	1	4	1	4	1		22
Investigation Derived Waste Samples									
Full TCLP (VOA, SVOC, Pest, Herb, Metals)	Sol/Liq	6						3	3
Reactivity - Cyanide	Sol/Liq	6						3	3
Reactivity - Sulfide	Sol/Liq	6						3	3
Corrosivity - pH (150.1/9045C)	Sol/Liq	6						3	3
Ignitability (Pensky Martens)	Sol/Liq	6						3	3

* The total number of equipment blanks, field blanks, and trip blanks may vary slightly. One equipment blank will be collected per day per equipment, one field blank will be collected for each week of sampling, and one trip blank will be collected for each cooler containing volatiles.
SB: Subsurface Soil, GW: Groundwater, DP: Direct Push, MW: Monitoring Well

TABLE 2
Summary of Baseline and Post-Injection Samples
Site 47 Pilot Study Work Plan
NSF-IH, Indian Head Maryland

			Analysis	Groundwater									Soil		
				TCL Volatiles	**TAL Metals**	**Cyanide**	**Filtered[2] TAL Metals**	**Chloride, Nitrate, Nitite, Sulfate**	**Sulfide**	**Alkalinity**	**Ferrous Iron**	**Methane, Ethane, Ethene**	**TCL Volatiles**	**TAL Metals and Cyanide**	**TOC**
			Method	EPA CLP OLM04	EPA CLP ILM04	EPA CLP ILM04	SW-846 9081	EPA 300.0	SW-846 9030	EPA 310.1	SM3500-Fe D	RSK-175	EPA CLP OLM04	EPA CLP ILM04	Lloyd Kahn
			Sample Container Type[1]	3X 40mL VOA vial	250mL HDPE	250mL HDPE	250mL HDPE	250mL HDPE	250mL HDPE	250mL HDPE	250mL HDPE	3X 40mL VOA vial	1X 4oz jar	4oz jar	4oz jar
			Preservative[6]	HCl to pH <2	HNO_3 to pH<2	NaOH to pH>12	HNO_3 to pH<2	none	ZnAce, NaOH to pH<2	none	none	HCl to pH <2	none	none	none
			Holding Times	14days	6mon/28day	14days	6mon/28day	48hours	7days	ASAP	ASAP	14days	48hours	6mon/28day/14day	14 days
Station ID	**Sample ID**	**Depth**	**Sample Media**												
Baseline															
IS47MW01	IS47MW01MMYY	16.89 - 26.89' BTOC	Groundwater	X	X	X	X	X	X	X	X	X			
IS47MW03	IS47MW03MMYY	10.27 - 20.27' BTOC	Groundwater	X	X	X	X	X	X	X	X	X			
IS47MW04	IS47MW04MMYY	8.51 - 18.51' BTOC	Groundwater	X	X	X	X	X	X	X	X	X			
IS47MW05	IS47MW05MMYY	5.88 - 15.88' BTOC	Groundwater	X	X	X	X	X	X	X	X	X			
IS47MW20	IS47MW20MMYY	8 - 18' BGS	Groundwater	X	X	X	X	X	X	X	X	X			
IS47MW21	IS47MW21MMYY	8 - 18' BGS	Groundwater	X	X	X	X	X	X	X	X	X			
IS47MW22	IS47MW22MMYY	8 - 18' BGS	Groundwater	X	X	X	X	X	X	X	X	X			
IS47MW23	IS47MW23MMYY	6 - 16' BGS	Groundwater	X	X	X	X	X	X	X	X	X			
IS47MW24	IS47MW24MMYY	6 - 16' BGS	Groundwater	X	X	X	X	X	X	X	X	X			
IS47MW25	IS47MW25MMYY	6 - 16' BGS	Groundwater	X	X	X	X	X	X	X	X	X			
IS47MWXX	IS47MWXXPMMYY	TBD	GW Duplicate[5]	X	X	X	X	X	X	X	X	X			
IS47MWXX	IS47MWXXMMYY	TBD	GW MS/MSD	X	X	X	X	X	X	X	X	X			
IH-QC	IS47EBXXMMDDYY	N/A	GW Equipment Blank[3]	X	X	X	X	X	X	X	X	X			
IS47SB20	IS47SB20-0618	6-18' BGS	Subsurface Soil											X	X
IS47SB20	IS47SB20-0609	6 - 9' BGS[7]	Subsurface Soil										X		
IS47SB20	IS47SB20-0912	9 - 12' BGS[7]	Subsurface Soil										X		
IS47SB20	IS47SB20-1215	12 - 15' BGS[7]	Subsurface Soil										X		
IS47SB20	IS47SB20-1518	15 - 18' BGS[7]	Subsurface Soil										X		
IS47SB21	IS47SB21-0618	6-18' BGS	Subsurface Soil											X	X
IS47SB21	IS47SB21-0609	6 - 9' BGS[7]	Subsurface Soil										X		
IS47SB21	IS47SB21-0912	9 - 12' BGS[7]	Subsurface Soil										X		
IS47SB21	IS47SB21-1215	12 - 15' BGS[7]	Subsurface Soil										X		
IS47SB21	IS47SB21-1518	15 - 18' BGS[7]	Subsurface Soil										X		
IS47SB22	IS47SB22-0618	6-18' BGS	Subsurface Soil											X	X
IS47SB22	IS47SB22-0609	6 - 9' BGS[7]	Subsurface Soil										X		
IS47SB22	IS47SB22-0912	9 - 12' BGS[7]	Subsurface Soil										X		
IS47SB22	IS47SB22-1215	12 - 15' BGS[7]	Subsurface Soil										X		
IS47SB22	IS47SB22-1518	15 - 18' BGS[7]	Subsurface Soil										X		
IS47SB23	IS47SB23-0618	6-18' BGS	Subsurface Soil											X	X
IS47SB23	IS47SB23-0609	6 - 9' BGS[7]	Subsurface Soil										X		
IS47SB23	IS47SB23-0912	9 - 12' BGS[7]	Subsurface Soil										X		
IS47SB23	IS47SB23-1215	12 - 15' BGS[7]	Subsurface Soil										X		
IS47SB23	IS47SB23-1518	15 - 18' BGS[7]	Subsurface Soil										X		
IS47SB24	IS47SB24-0618	6-18' BGS	Subsurface Soil											X	X
IS47SB24	IS47SB24-0609	6 - 9' BGS[7]	Subsurface Soil										X		
IS47SB24	IS47SB24-0912	9 - 12' BGS[7]	Subsurface Soil										X		
IS47SB24	IS47SB24-1215	12 - 15' BGS[7]	Subsurface Soil										X		
IS47SB24	IS47SB24-1518	15 - 18' BGS[7]	Subsurface Soil										X		
IS47SB25	IS47SB25-0618	6-18' BGS	Subsurface Soil											X	X
IS47SB25	IS47SB25-0609	6 - 9' BGS[7]	Subsurface Soil										X		
IS47SB25	IS47SB25-0912	9 - 12' BGS[7]	Subsurface Soil										X		
IS47SB25	IS47SB25-1215	12 - 15' BGS[7]	Subsurface Soil										X		
IS47SB25	IS47SB25-1518	15 - 18' BGS[7]	Subsurface Soil										X		
IS47SBXX	IS47SBXXP-TTBB	TBD	SB Duplicate[5]										X	X	X
IS47SBXX	IS47SBXX-TTBB	TBD	SB MS/MSD										X	X	X
IH-QC	IS47EBXXMMDDYY	N/A	SB Equipment Blank[3]										X	X	X
IH-QC	IS47FBMMDDYY	N/A	Field Blank[4]	X	X	X						X			
IH-QC	IS47TBMMDDYY	N/A	Trip Blank[8]	X								X			

TABLE 2
Summary of Baseline and Post-Injection Samples
Site 47 Pilot Study Work Plan
NSF-IH, Indian Head Maryland

				Groundwater									Soil		
			Analysis	**TCL Volatiles**	**TAL Metals**	**Cyanide**	**Filtered[2] TAL Metals**	**Chloride, Nitrate, Nitite, Sulfate**	**Sulfide**	**Alkalinity**	**Ferrous Iron**	**Methane, Ethane, Ethene**	**TCL Volatiles**	**TAL Metals and Cyanide**	**TOC**
			Method	EPA CLP OLM04	EPA CLP ILM04	EPA CLP ILM04	SW-846 9081	EPA 300.0	SW-846 9030	EPA 310.1	SM3500-Fe D	RSK-175	EPA CLP OLM04	EPA CLP ILM04	Lloyd Kahn
			Sample Container Type[1]	3X 40mL VOA vial	250mL HDPE	250mL HDPE	250mL HDPE	250mL HDPE	250mL HDPE	250mL HDPE	250mL HDPE	3X 40mL VOA vial	1X 4oz jar	4oz jar	4oz jar
			Preservative[6]	HCl to pH <2	HNO_3 to pH<2	NaOH to pH>12	HNO_3 to pH<2	none	ZnAce, NaOH to pH<2	none	none	HCl to pH <2	none	none	none
			Holding Times	14days	6mon/28day	14days	6mon/28day	48hours	7days	ASAP	ASAP	14days	48hours	6mon/28day/14day	14 days
Station ID	**Sample ID**	**Depth**	**Sample Media**												
2-Month Post-First Injection															
IS47MW01	IS47MW01MMYY	16.89 - 26.89' BTOC	Groundwater	X	X	X	X	X	X	X	X	X			
IS47MW03	IS47MW03MMYY	10.27 - 20.27' BTOC	Groundwater	X	X	X	X	X	X	X	X	X			
IS47MW04	IS47MW04MMYY	8.51 - 18.51' BTOC	Groundwater	X	X	X	X	X	X	X	X	X			
IS47MW05	IS47MW05MMYY	5.88 - 15.88' BTOC	Groundwater	X	X	X	X	X	X	X	X	X			
IS47MW20	IS47MW20MMYY	8 - 18' BGS	Groundwater	X	X	X	X	X	X	X	X	X			
IS47MW21	IS47MW21MMYY	8 - 18' BGS	Groundwater	X	X	X	X	X	X	X	X	X			
IS47MW22	IS47MW22MMYY	8 - 18' BGS	Groundwater	X	X	X	X	X	X	X	X	X			
IS47MW23	IS47MW23MMYY	6 - 16' BGS	Groundwater	X	X	X	X	X	X	X	X	X			
IS47MW24	IS47MW24MMYY	6 - 16' BGS	Groundwater	X	X	X	X	X	X	X	X	X			
IS47MW25	IS47MW25MMYY	6 - 16' BGS	Groundwater	X	X	X	X	X	X	X	X	X			
IS47MWXX	IS47MWXXPMMYY	TBD	GW Duplicate[5]	X	X	X	X	X	X	X	X	X			
IS47MWXX	IS47MWXXMMYY	TBD	GW MS/MSD	X	X	X	X	X	X	X	X	X			
IH-QC	IS47EBMMDDYY	N/A	GW Equipment Blank[3]	X	X	X	X	X	X	X	X	X			
IH-QC	IS47FBMMDDYY	N/A	Field Blank[4]	X	X	X						X			
IH-QC	IS47TBMMDDYY	N/A	Trip Blank[8]	X								X			

TABLE 2
Summary of Baseline and Post-Injection Samples
Site 47 Pilot Study Work Plan
NSF-IH, Indian Head Maryland

				Groundwater									Soil		
			Analysis	**TCL Volatiles**	**TAL Metals**	**Cyanide**	**Filtered[2] TAL Metals**	**Chloride, Nitrate, Nitite, Sulfate**	**Sulfide**	**Alkalinity**	**Ferrous Iron**	**Methane, Ethane, Ethene**	**TCL Volatiles**	**TAL Metals and Cyanide**	**TOC**
			Method	EPA CLP OLM04	EPA CLP ILM04	EPA CLP ILM04	SW-846 9081	EPA 300.0	SW-846 9030	EPA 310.1	SM3500-Fe D	RSK-175	EPA CLP OLM04	EPA CLP ILM04	Lloyd Kahn
			Sample Container Type[1]	3X 40mL VOA vial	250mL HDPE	250mL HDPE	250mL HDPE	250mL HDPE	250mL HDPE	250mL HDPE	250mL HDPE	3X 40mL VOA vial	1X 4oz jar	4oz jar	4oz jar
			Preservative[6]	HCl to pH <2	HNO_3 to pH<2	NaOH to pH>12	HNO_3 to pH<2	none	ZnAce, NaOH to pH<2	none	none	HCl to pH <2	none	none	none
			Holding Times	14days	6mon/28day	14days	6mon/28day	48hours	7days	ASAP	ASAP	14days	48hours	6mon/28day/14day	14 days
Station ID	**Sample ID**	**Depth**	**Sample Media**												
6-Month Post-First Injection															
IS47MW01	IS47MW01MMYY	16.89 - 26.89' BTOC	Groundwater	X	X	X	X	X	X	X	X	X			
IS47MW03	IS47MW03MMYY	10.27 - 20.27' BTOC	Groundwater	X	X	X	X	X	X	X	X	X			
IS47MW04	IS47MW04MMYY	8.51 - 18.51' BTOC	Groundwater	X	X	X	X	X	X	X	X	X			
IS47MW05	IS47MW05MMYY	5.88 - 15.88' BTOC	Groundwater	X	X	X	X	X	X	X	X	X			
IS47MW20	IS47MW20MMYY	8 - 18' BGS	Groundwater	X	X	X	X	X	X	X	X	X			
IS47MW21	IS47MW21MMYY	8 - 18' BGS	Groundwater	X	X	X	X	X	X	X	X	X			
IS47MW22	IS47MW22MMYY	8 - 18' BGS	Groundwater	X	X	X	X	X	X	X	X	X			
IS47MW23	IS47MW23MMYY	6 - 16' BGS	Groundwater	X	X	X	X	X	X	X	X	X			
IS47MW24	IS47MW24MMYY	6 - 16' BGS	Groundwater	X	X	X	X	X	X	X	X	X			
IS47MW25	IS47MW25MMYY	6 - 16' BGS	Groundwater	X	X	X	X	X	X	X	X	X			
IS47MWXX	IS47MWXXPMMYY	TBD	GW Duplicate[5]	X	X	X	X	X	X	X	X	X			
IS47MWXX	IS47MWXXMMYY	TBD	GW MS/MSD	X	X	X	X	X	X	X	X	X			
IH-QC	IS47EBXXMMDDYY	N/A	GW Equipment Blank[3]	X	X	X	X	X	X	X	X	X			
IS47SB20	IS47SB20-0618	6-18' BGS	Subsurface Soil											X	X
IS47SB20	IS47SB20-0609	6 - 9' BGS[7]	Subsurface Soil										X		
IS47SB20	IS47SB20-0912	9 - 12' BGS[7]	Subsurface Soil										X		
IS47SB20	IS47SB20-1215	12 - 15' BGS[7]	Subsurface Soil										X		
IS47SB20	IS47SB20-1518	15 - 18' BGS[7]	Subsurface Soil										X		
IS47SB21	IS47SB21-0618	6-18' BGS	Subsurface Soil											X	X
IS47SB21	IS47SB21-0609	6 - 9' BGS[7]	Subsurface Soil										X		
IS47SB21	IS47SB21-0912	9 - 12' BGS[7]	Subsurface Soil										X		
IS47SB21	IS47SB21-1215	12 - 15' BGS[7]	Subsurface Soil										X		
IS47SB21	IS47SB21-1518	15 - 18' BGS[7]	Subsurface Soil										X		
IS47SB22	IS47SB22-0618	6-18' BGS	Subsurface Soil											X	X
IS47SB22	IS47SB22-0609	6 - 9' BGS[7]	Subsurface Soil										X		
IS47SB22	IS47SB22-0912	9 - 12' BGS[7]	Subsurface Soil										X		
IS47SB22	IS47SB22-1215	12 - 15' BGS[7]	Subsurface Soil										X		
IS47SB22	IS47SB22-1518	15 - 18' BGS[7]	Subsurface Soil										X		
IS47SB23	IS47SB23-0618	6-18' BGS	Subsurface Soil											X	X
IS47SB23	IS47SB23-0609	6 - 9' BGS[7]	Subsurface Soil										X		
IS47SB23	IS47SB23-0912	9 - 12' BGS[7]	Subsurface Soil										X		
IS47SB23	IS47SB23-1215	12 - 15' BGS[7]	Subsurface Soil										X		
IS47SB23	IS47SB23-1518	15 - 18' BGS[7]	Subsurface Soil										X		
IS47SB24	IS47SB24-0618	6-18' BGS	Subsurface Soil											X	X
IS47SB24	IS47SB24-0609	6 - 9' BGS[7]	Subsurface Soil										X		
IS47SB24	IS47SB24-0912	9 - 12' BGS[7]	Subsurface Soil										X		
IS47SB24	IS47SB24-1215	12 - 15' BGS[7]	Subsurface Soil										X		
IS47SB24	IS47SB24-1518	15 - 18' BGS[7]	Subsurface Soil										X		
IS47SB25	IS47SB25-0618	6-18' BGS	Subsurface Soil											X	X
IS47SB25	IS47SB25-0609	6 - 9' BGS[7]	Subsurface Soil										X		
IS47SB25	IS47SB25-0912	9 - 12' BGS[7]	Subsurface Soil										X		
IS47SB25	IS47SB25-1215	12 - 15' BGS[7]	Subsurface Soil										X		
IS47SB25	IS47SB25-1518	15 - 18' BGS[7]	Subsurface Soil										X		
IS47SBXX	IS47SBXXP-TTBB	TBD	SB Duplicate[5]										X	X	X
IS47SBXX	IS47SBXX-TTBB	TBD	SB MS/MSD										X	X	X
IH-QC	IS47EBXXMMDDYY	N/A	SB Equipment Blank[3]										X	X	X
IH-QC	IS47FBMMDDYY	N/A	Field Blank[4]	X	X	X						X			
IH-QC	IS47TBMMDDYY	N/A	Trip Blank[8]	X								X			

TABLE 2
Summary of Baseline and Post-Injection Samples
Site 47 Pilot Study Work Plan
NSF-IH, Indian Head Maryland

				Groundwater									Soil		
			Analysis	**TCL Volatiles**	**TAL Metals**	**Cyanide**	**Filtered[2] TAL Metals**	**Chloride, Nitrate, Nitite, Sulfate**	**Sulfide**	**Alkalinity**	**Ferrous Iron**	**Methane, Ethane, Ethene**	**TCL Volatiles**	**TAL Metals and Cyanide**	**TOC**
			Method	EPA CLP OLM04	EPA CLP ILM04	EPA CLP ILM04	SW-846 9081	EPA 300.0	SW-846 9030	EPA 310.1	SM3500-Fe D	RSK-175	EPA CLP OLM04	EPA CLP ILM04	Lloyd Kahn
			Sample Container Type[1]	3X 40mL VOA vial	250mL HDPE	250mL HDPE	250mL HDPE	250mL HDPE	250mL HDPE	250mL HDPE	250mL HDPE	3X 40mL VOA vial	1X 4oz jar	4oz jar	4oz jar
			Preservative[6]	HCl to pH <2	HNO_3 to pH<2	NaOH to pH>12	HNO_3 to pH<2	none	ZnAce, NaOH to pH<2	none	none	HCl to pH <2	none	none	none
			Holding Times	14days	6mon/28day	14days	6mon/28day	48hours	7days	ASAP	ASAP	14days	48hours	6mon/28day/14day	14 days
Station ID	**Sample ID**	**Depth**	**Sample Media**												
2-Month Post-Second Injection															
IS47MW01	IS47MW01MMYY	16.89 - 26.89' BTOC	Groundwater	X	X	X	X	X	X	X	X	X			
IS47MW03	IS47MW03MMYY	10.27 - 20.27' BTOC	Groundwater	X	X	X	X	X	X	X	X	X			
IS47MW04	IS47MW04MMYY	8.51 - 18.51' BTOC	Groundwater	X	X	X	X	X	X	X	X	X			
IS47MW05	IS47MW05MMYY	5.88 - 15.88' BTOC	Groundwater	X	X	X	X	X	X	X	X	X			
IS47MW20	IS47MW20MMYY	8 - 18' BGS	Groundwater	X	X	X	X	X	X	X	X	X			
IS47MW21	IS47MW21MMYY	8 - 18' BGS	Groundwater	X	X	X	X	X	X	X	X	X			
IS47MW22	IS47MW22MMYY	8 - 18' BGS	Groundwater	X	X	X	X	X	X	X	X	X			
IS47MW23	IS47MW23MMYY	6 - 16' BGS	Groundwater	X	X	X	X	X	X	X	X	X			
IS47MW24	IS47MW24MMYY	6 - 16' BGS	Groundwater	X	X	X	X	X	X	X	X	X			
IS47MW25	IS47MW25MMYY	6 - 16' BGS	Groundwater	X	X	X	X	X	X	X	X	X			
IS47MWXX	IS47MWXXPMMYY	TBD	GW Duplicate[5]	X	X	X	X	X	X	X	X	X			
IS47MWXX	IS47MWXXMMYY	TBD	GW MS/MSD	X	X	X	X	X	X	X	X	X			
IH-QC	IS47EBMMDDYY	N/A	GW Equipment Blank[3]	X	X	X	X	X	X	X	X	X			
IH-QC	IS47FBMMDDYY	N/A	Field Blank[4]	X	X	X						X			
IH-QC	IS47TBMMDDYY	N/A	Trip Blank[8]	X								X			

TABLE 2
Summary of Baseline and Post-Injection Samples
Site 47 Pilot Study Work Plan
NSF-IH, Indian Head Maryland

				Groundwater									Soil		
			Analysis	**TCL Volatiles**	**TAL Metals**	**Cyanide**	**Filtered[2] TAL Metals**	**Chloride, Nitrate, Nitite, Sulfate**	**Sulfide**	**Alkalinity**	**Ferrous Iron**	**Methane, Ethane, Ethene**	**TCL Volatiles**	**TAL Metals and Cyanide**	**TOC**
			Method	EPA CLP OLM04	EPA CLP ILM04	EPA CLP ILM04	SW-846 9081	EPA 300.0	SW-846 9030	EPA 310.1	SM3500-Fe D	RSK-175	EPA CLP OLM04	EPA CLP ILM04	Lloyd Kahn
			Sample Container Type[1]	3X 40mL VOA vial	250mL HDPE	250mL HDPE	250mL HDPE	250mL HDPE	250mL HDPE	250mL HDPE	250mL HDPE	3X 40mL VOA vial	1X 4oz jar	4oz jar	4oz jar
			Preservative[6]	HCl to pH <2	HNO_3 to pH<2	NaOH to pH>12	HNO_3 to pH<2	none	ZnAce, NaOH to pH<2	none	none	HCl to pH <2	none	none	none
			Holding Times	14days	6mon/28day	14days	6mon/28day	48hours	7days	ASAP	ASAP	14days	48hours	6mon/28day/14day	14 days
Station ID	**Sample ID**	**Depth**	**Sample Media**												
6-Month Post-Second Injection															
IS47MW01	IS47MW01MMYY	16.89 - 26.89' BTOC	Groundwater	X	X	X	X	X	X	X	X	X			
IS47MW03	IS47MW03MMYY	10.27 - 20.27' BTOC	Groundwater	X	X	X	X	X	X	X	X	X			
IS47MW04	IS47MW04MMYY	8.51 - 18.51' BTOC	Groundwater	X	X	X	X	X	X	X	X	X			
IS47MW05	IS47MW05MMYY	5.88 - 15.88' BTOC	Groundwater	X	X	X	X	X	X	X	X	X			
IS47MW20	IS47MW20MMYY	8 - 18' BGS	Groundwater	X	X	X	X	X	X	X	X	X			
IS47MW21	IS47MW21MMYY	8 - 18' BGS	Groundwater	X	X	X	X	X	X	X	X	X			
IS47MW22	IS47MW22MMYY	8 - 18' BGS	Groundwater	X	X	X	X	X	X	X	X	X			
IS47MW23	IS47MW23MMYY	6 - 16' BGS	Groundwater	X	X	X	X	X	X	X	X	X			
IS47MW24	IS47MW24MMYY	6 - 16' BGS	Groundwater	X	X	X	X	X	X	X	X	X			
IS47MW25	IS47MW25MMYY	6 - 16' BGS	Groundwater	X	X	X	X	X	X	X	X	X			
IS47MWXX	IS47MWXXPMMYY	TBD	GW Duplicate[5]	X	X	X	X	X	X	X	X	X			
IS47MWXX	IS47MWXXMMYY	TBD	GW MS/MSD	X	X	X	X	X	X	X	X	X			
IH-QC	IS47EBXXMMDDYY	N/A	GW Equipment Blank[3]	X	X	X	X	X	X	X	X	X			
IS47SB20	IS47SB20-0618	6-18' BGS	Subsurface Soil											X	X
IS47SB20	IS47SB20-0609	6 - 9' BGS[7]	Subsurface Soil										X		
IS47SB20	IS47SB20-0912	9 - 12' BGS[7]	Subsurface Soil										X		
IS47SB20	IS47SB20-1215	12 - 15' BGS[7]	Subsurface Soil										X		
IS47SB20	IS47SB20-1518	15 - 18' BGS[7]	Subsurface Soil										X		
IS47SB21	IS47SB21-0618	6-18' BGS	Subsurface Soil											X	X
IS47SB21	IS47SB21-0609	6 - 9' BGS[7]	Subsurface Soil										X		
IS47SB21	IS47SB21-0912	9 - 12' BGS[7]	Subsurface Soil										X		
IS47SB21	IS47SB21-1215	12 - 15' BGS[7]	Subsurface Soil										X		
IS47SB21	IS47SB21-1518	15 - 18' BGS[7]	Subsurface Soil										X		
IS47SB22	IS47SB22-0618	6-18' BGS	Subsurface Soil											X	X
IS47SB22	IS47SB22-0609	6 - 9' BGS[7]	Subsurface Soil										X		
IS47SB22	IS47SB22-0912	9 - 12' BGS[7]	Subsurface Soil										X		
IS47SB22	IS47SB22-1215	12 - 15' BGS[7]	Subsurface Soil										X		
IS47SB22	IS47SB22-1518	15 - 18' BGS[7]	Subsurface Soil										X		
IS47SB23	IS47SB23-0618	6-18' BGS	Subsurface Soil											X	X
IS47SB23	IS47SB23-0609	6 - 9' BGS[7]	Subsurface Soil										X		
IS47SB23	IS47SB23-0912	9 - 12' BGS[7]	Subsurface Soil										X		
IS47SB23	IS47SB23-1215	12 - 15' BGS[7]	Subsurface Soil										X		
IS47SB23	IS47SB23-1518	15 - 18' BGS[7]	Subsurface Soil										X		
IS47SB24	IS47SB24-0618	6-18' BGS	Subsurface Soil											X	X
IS47SB24	IS47SB24-0609	6 - 9' BGS[7]	Subsurface Soil										X		
IS47SB24	IS47SB24-0912	9 - 12' BGS[7]	Subsurface Soil										X		
IS47SB24	IS47SB24-1215	12 - 15' BGS[7]	Subsurface Soil										X		
IS47SB24	IS47SB24-1518	15 - 18' BGS[7]	Subsurface Soil										X		
IS47SB25	IS47SB25-0618	6-18' BGS	Subsurface Soil											X	X
IS47SB25	IS47SB25-0609	6 - 9' BGS[7]	Subsurface Soil										X		
IS47SB25	IS47SB25-0912	9 - 12' BGS[7]	Subsurface Soil										X		
IS47SB25	IS47SB25-1215	12 - 15' BGS[7]	Subsurface Soil										X		
IS47SB25	IS47SB25-1518	15 - 18' BGS[7]	Subsurface Soil										X		
IS47SBXX	IS47SBXXP-TTBB	TBD	SB Duplicate[5]										X	X	X
IS47SBXX	IS47SBXX-TTBB	TBD	SB MS/MSD										X	X	X
IH-QC	IS47EBXXMMDDYY	N/A	SB Equipment Blank[3]										X	X	X
IH-QC	IS47FBMMDDYY	N/A	Field Blank[4]	X	X	X						X			
IH-QC	IS47TBMMDDYY	N/A	Trip Blank[8]	X								X			

Notes:
1. The sample container type may vary slightly by laboratory.
2. Filtered metals will be field filtered.
3. One equipment blank will be taken per day per equipment type.
4. One field blank will be taken per week of sampling. The field blank will not be collected for filtered metals.
5. Parent sample will be recorded in logbook.
6. All samples will be placed on ice from sample collection time until the samples arrive at the laboratory.
7. Depth intervals will be chosen if PID detects volatiles.
8. One trip blank will be taken per cooler containing volatiles.
9. Baseline samples will be analyzed under a 7 calendar-day TAT. All other samples will be analyzed under a standard 28 calendar-day TAT.

\\aphrodite\projects\18GIS\IndianHead\figures\Site47\Pilot_Study\Figure 1 - Pilot Study Target Area.mxd

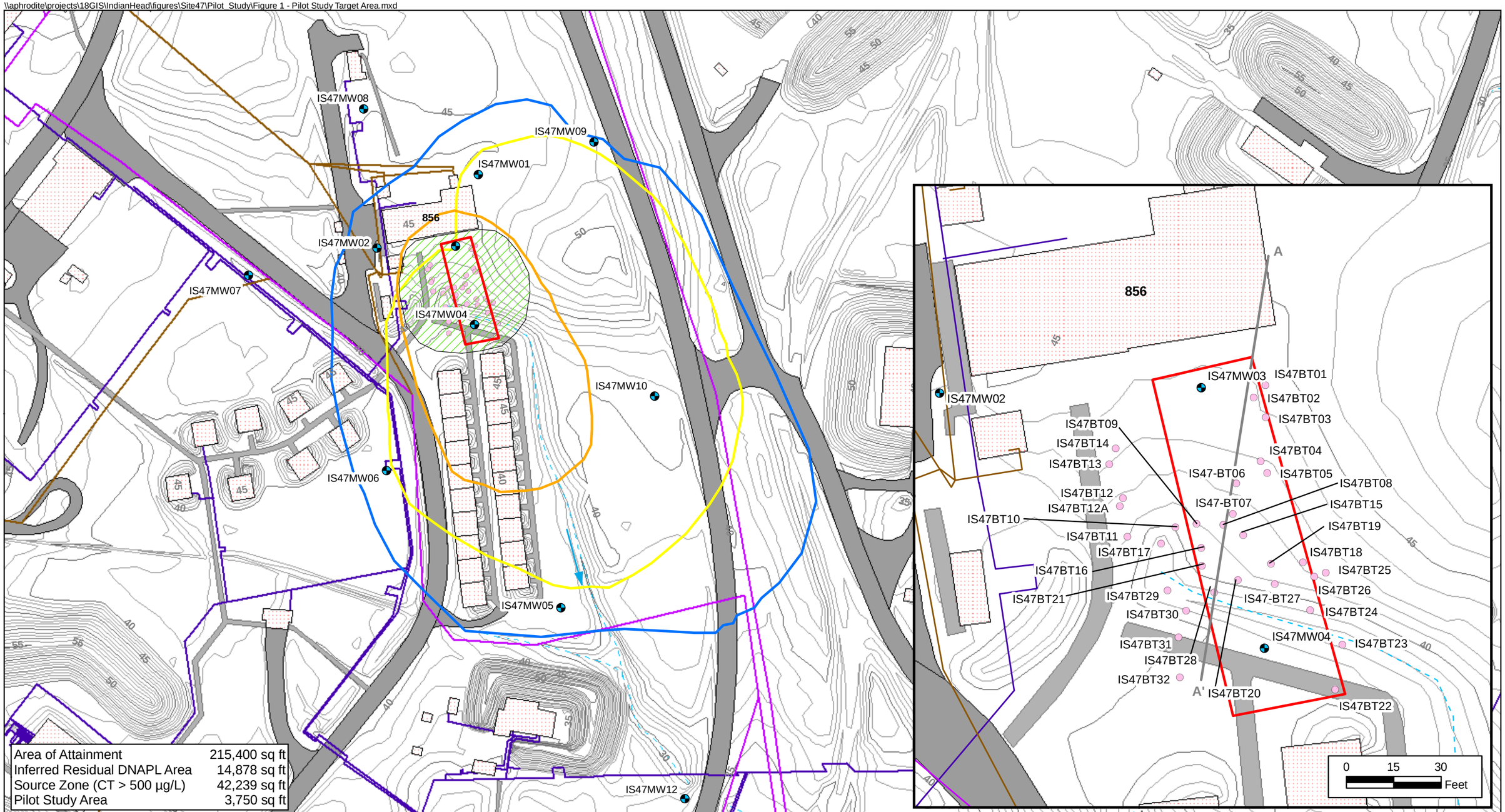

Legend

- Existing Monitoring Well Location
- Existing DPT Saturated Soil Sampling Location (June 2006)
- Approximate Boundary of Area of Attainment
- VOC Area of Attainment
- Source (zone) Carbon terachloride = 500 ppb
- Inferred Residual DNAPL Area
- Pilot Study Area
- Building
- Sidewalks
- Roads
- Industrial Pipes
- Wastewater Pipes
- Heating and Cooling System
- Intermittent Swale
- Elevation Contour (1 ft Interval)
- Elevation Contour (5 ft Interval)

Notes:
1. The area of attainment is from the Pre-Draft Feasibility Study Report (Figure 3-1, CH2M Hill, 2005).
2. Inset shows the proposed lcoations for the Pilot Study and the existing DPT points for saturated soil sample collection in June 2006 for use in the Bench-Scale Study.

N W E S

0 50 100 Feet

Figure 1
Pilot Study Target Area
Site 47 Pilot Study Work Plan
NSF-IH, Indian Head, Maryland

CH2MHILL

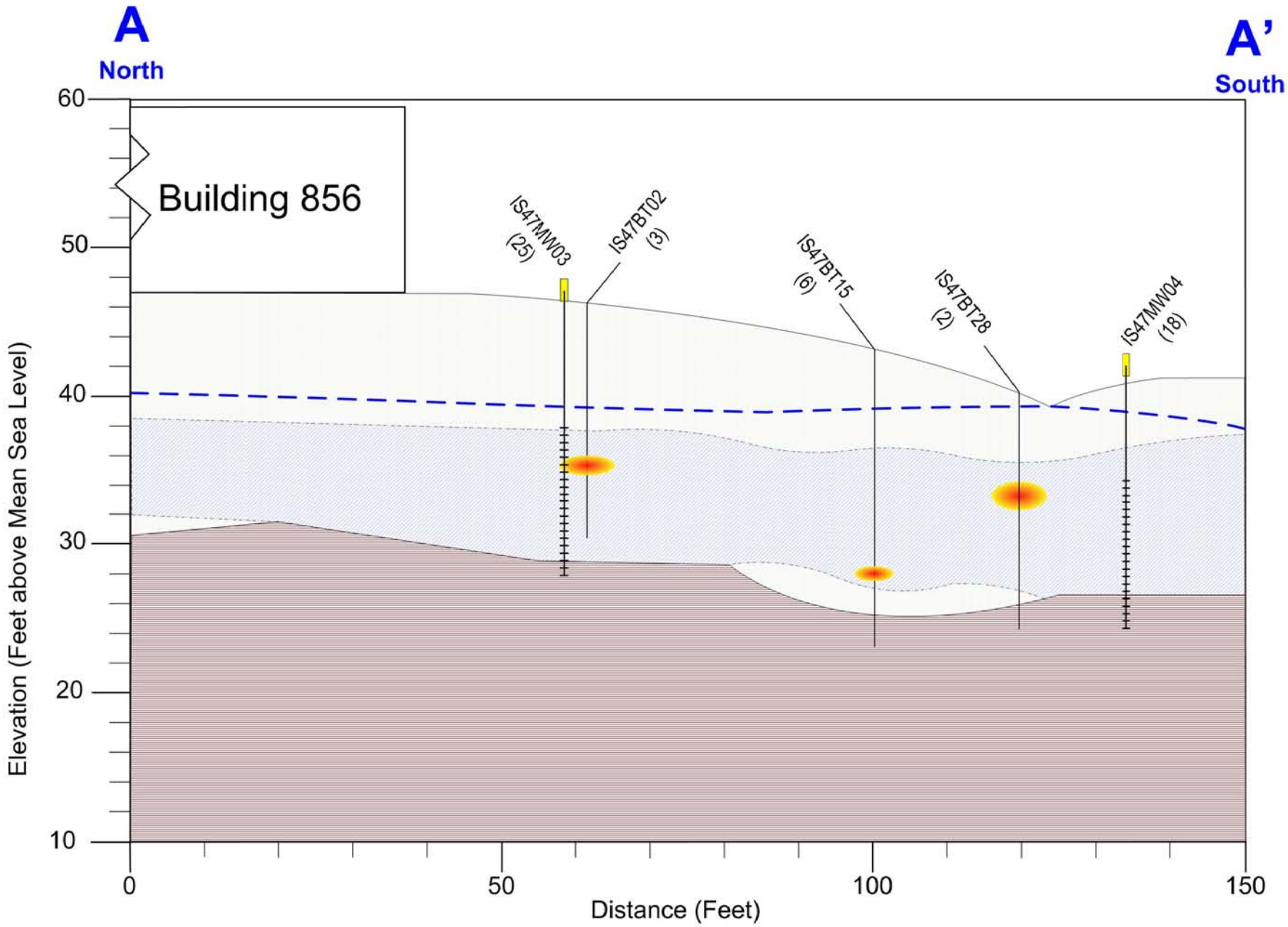

LEGEND

- Sand
- Interbedded Silty Sands
- Silt and Clay
- IS47BT03 — Direct Push Boring (Distance From Cross-Section Line)
- Observed NAPL
- Approximate Groundwater Surface, As Inferred June, 2006
- IS47MW03 — Groundwater Monitoring Well and Screened Interval (Distance From Cross-Section Line)

Figure 2
A-A' Geologic Cross-Section
Site 47 Pilot Study Work Plan
NSF-IH, Indian Head, Maryland

Note: Cross section prepared from select boring data projected on the transect shown in Figure 1, to highlight areas of observed NAPL

CH2MHILL

\\aphrodite\projects\18GIS\IndianHead\figures\Site47\Pilot_Study\Figure 3 - Proposed Injection Point Layout and MW Locations.mxd

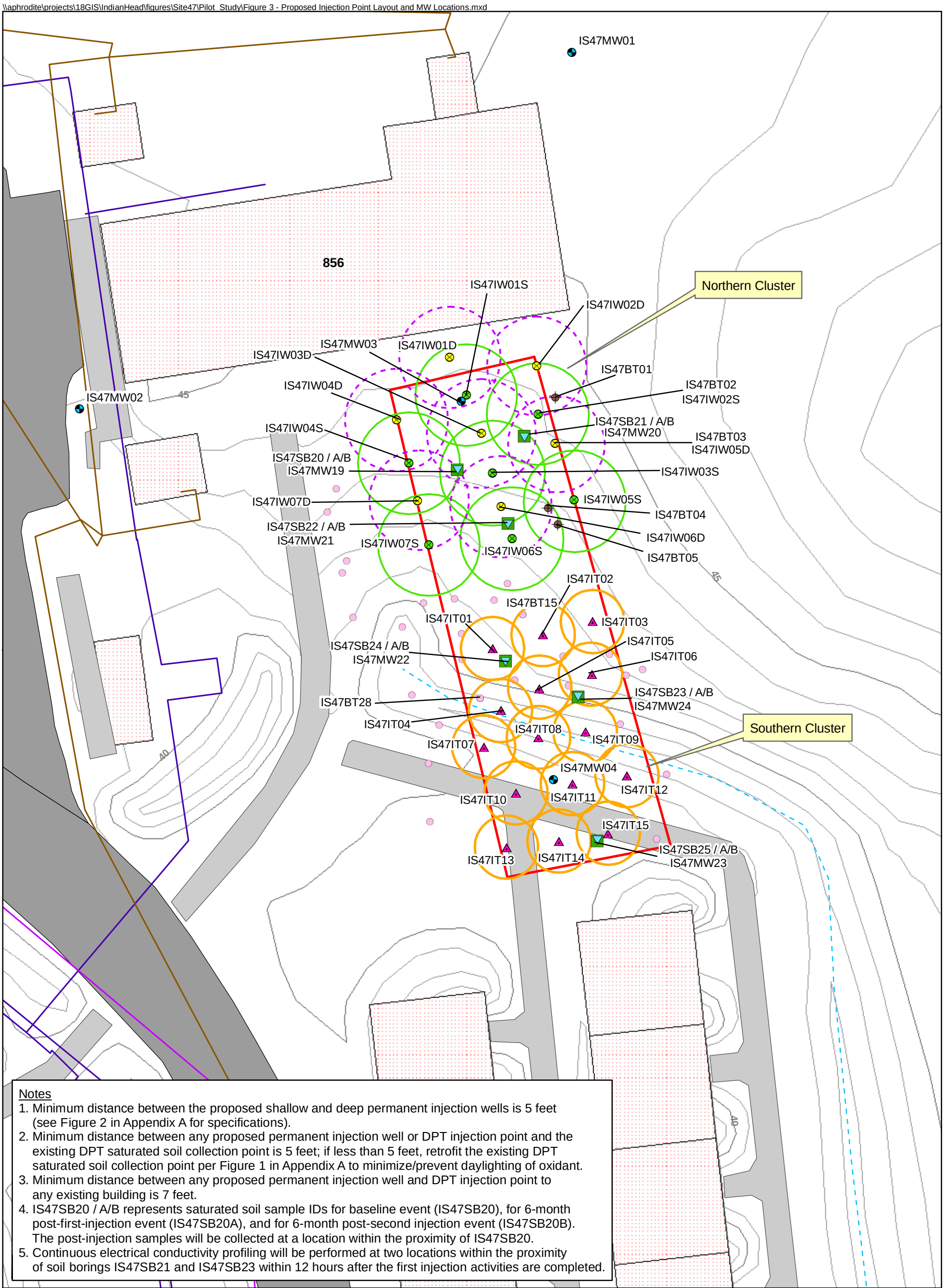

Notes
1. Minimum distance between the proposed shallow and deep permanent injection wells is 5 feet (see Figure 2 in Appendix A for specifications).
2. Minimum distance between any proposed permanent injection well or DPT injection point and the existing DPT saturated soil collection point is 5 feet; if less than 5 feet, retrofit the existing DPT saturated soil collection point per Figure 1 in Appendix A to minimize/prevent daylighting of oxidant.
3. Minimum distance between any proposed permanent injection well and DPT injection point to any existing building is 7 feet.
4. IS47SB20 / A/B represents saturated soil sample IDs for baseline event (IS47SB20), for 6-month post-first-injection event (IS47SB20A), and for 6-month post-second injection event (IS47SB20B). The post-injection samples will be collected at a location within the proximity of IS47SB20.
5. Continuous electrical conductivity profiling will be performed at two locations within the proximity of soil borings IS47SB21 and IS47SB23 within 12 hours after the first injection activities are completed.

Legend

- Existing Monitoring Well Location
- Proposed Shallow Permanent Injection Well (6-12' bgs)
- Proposed Deep Permanent Injection Well (12-18' bgs)
- DPT Saturated Soil Sampling Location (June 2006)
- Proposed Saturated Soil Sample Location
- Proposed DPT Temporary Injection Point (6-18' bgs)
- Proposed Permanent Monitoring Well
- Boring Overdrill Location
- Projected ROI for Shallow Injection Wells (10 feet)
- Projected ROI for Deep Injection Wells (10 feet)
- Projected ROI for DPT Injection Points (7 feet)
- Pilot Study Area
- Roads
- Sidewalks
- Building
- Industrial Pipes
- Wastewater Pipes
- Heating and Cooling System
- Elevation Contour (1 ft Interval)
- Elevation Contour (5 ft Interval)
- Intermittent Swale

N W E S

0 10 20 Feet

Figure 3
Proposed Injection Well Layout and Monitoring Well and Saturated Soil Sample Locations
Site 47 Pilot Study Work Plan
NSF-IH, Indian Head, Maryland

CH2MHILL

\\aphrodite\projects\18GIS\IndianHead\figures\Site47\Pilot_Study\Figure 4 - Proposed Locations for Passive Soil Venting.mxd

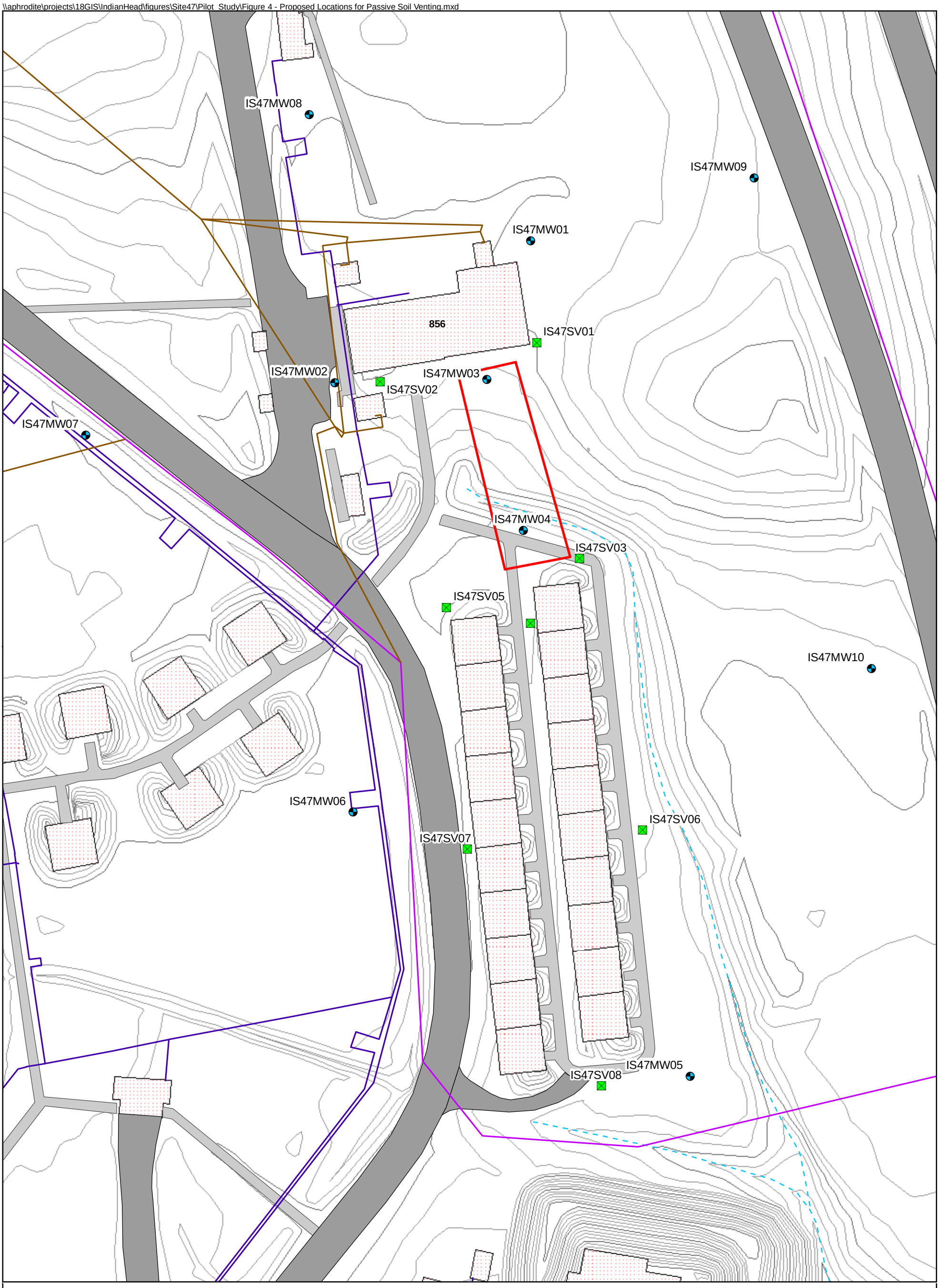

Legend

- Proposed Passive Soil Venting Location
- Existing Monitoring Well Location
- Pilot Study Area
- Roads
- Sidewalks
- Building
- Industrial Pipes
- Wastewater Pipes
- Heating and Cooling System
- Intermittent Swale
- Elevation Contour (1 ft Interval)
- Elevation Contour (5 ft Interval)

N W E S

0 25 50 Feet

Figure 4
Proposed Locations for Passive Soil Venting Points
Site 47 Pilot Study Work Plan
NSF-IH, Indian Head, Maryland

CH2MHILL

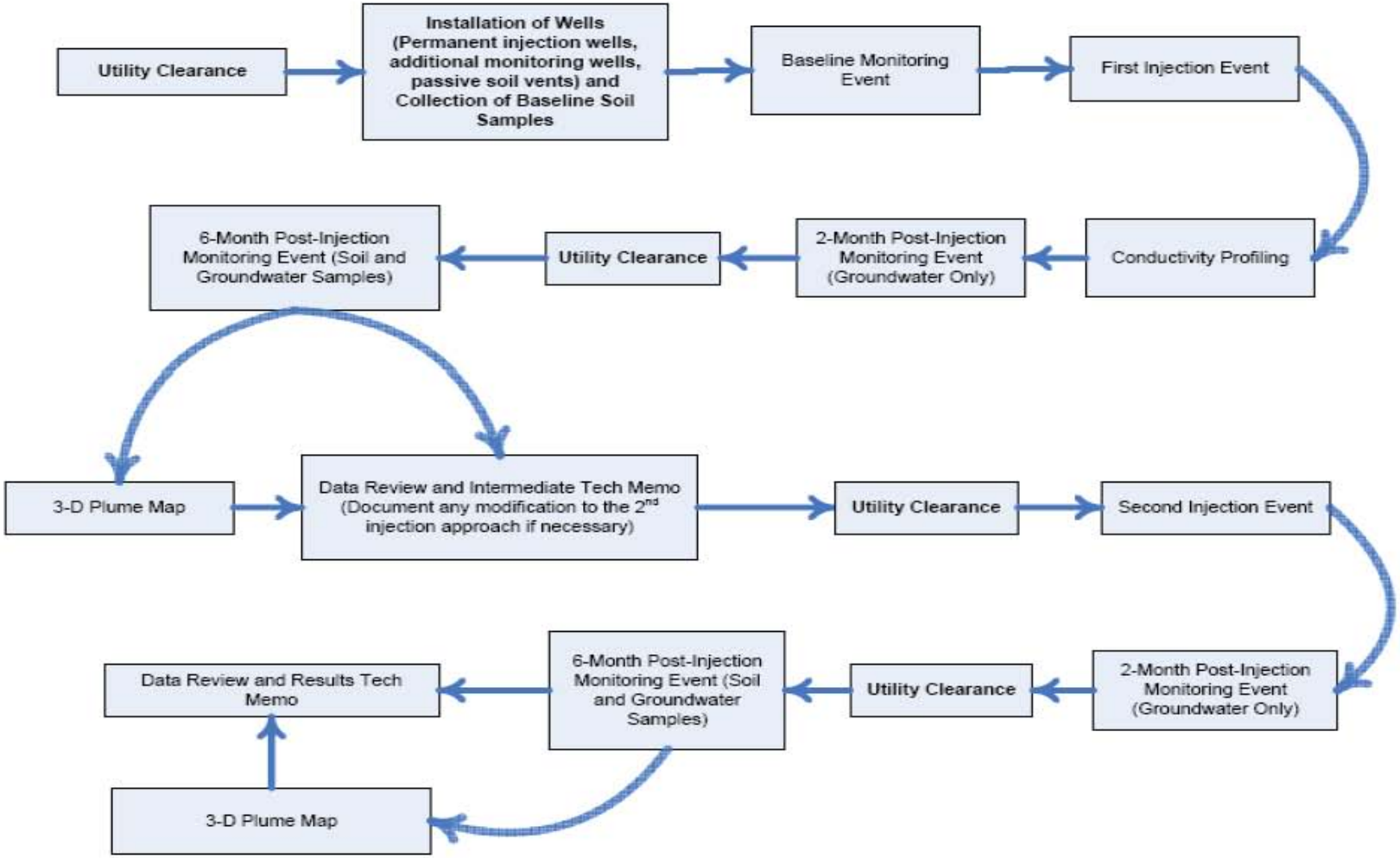

FIGURE 5
Sequence of Field Activities
Site 47 Pilot Study Work Plan
NSF-IH, Indian Head, Maryland

FIGURE 6 - TENTATIVE SCHEDULE
SITE 47 PILOT STUDY
NSF-IH, INDIAN HEAD, MARYLAND

ID	Task Name	Duration	Start	Finish	Actual Working Days
1	**Pilot Testing (Tentative)**	**776 days**	**Thu 5/31/07**	**Tue 5/18/10**	
2	Draft Work Plan	5.3 wks	Thu 5/31/07	Fri 7/6/07	
3	IHIRT Review	8.5 mons	Fri 7/6/07	Thu 2/28/08	
4	Final Work Plan	0 days	Wed 4/30/08	Wed 4/30/08	
5	Staking out + utility survey	1 day	Mon 7/14/08	Mon 7/14/08	
6	Installation of 14 Injection wells, 6 MWs, soil sampling, and 8 passive vents	10 days	Tue 7/15/08	Mon 7/28/08	10
7	Baseline Sampling (13 wells)	1 wk	Tue 8/5/08	Mon 8/11/08	5
8	First Injection Event	14 days	Tue 8/12/08	Fri 8/29/08	14
9	2 Month Post-Injection Monitoring	5 days	Wed 10/29/08	Tue 11/4/08	5
10	6 Month Post-Injection Monitoring	10 days	Thu 2/26/09	Wed 3/11/09	10
11	Data Receipt and Evaluation	30 edays	Wed 3/11/09	Fri 4/10/09	
12	Interm Tech Memorandum	3 wks	Mon 4/13/09	Fri 5/1/09	
13	IHIRT Review and Concurrence on Interm Tech Memo	2 wks	Mon 5/4/09	Fri 5/15/09	
14	2nd Injection Event	10 days	Mon 5/18/09	Fri 5/29/09	10
15	2 Month Post-Injection Monitoring	5 days	Mon 7/27/09	Fri 7/31/09	5
16	6 Month Post-Injection Monitoring	10 days	Mon 11/30/09	Fri 12/11/09	10
17	Complete Data Receipt	30 edays	Fri 12/11/09	Sun 1/10/10	
18	Draft Pilot Test Results	8 wks	Mon 1/11/10	Fri 3/5/10	
19	IHIRT Review	60 edays	Fri 3/5/10	Tue 5/4/10	
20	Final Pilot Test Results	2 wks	Wed 5/5/10	Tue 5/18/10	

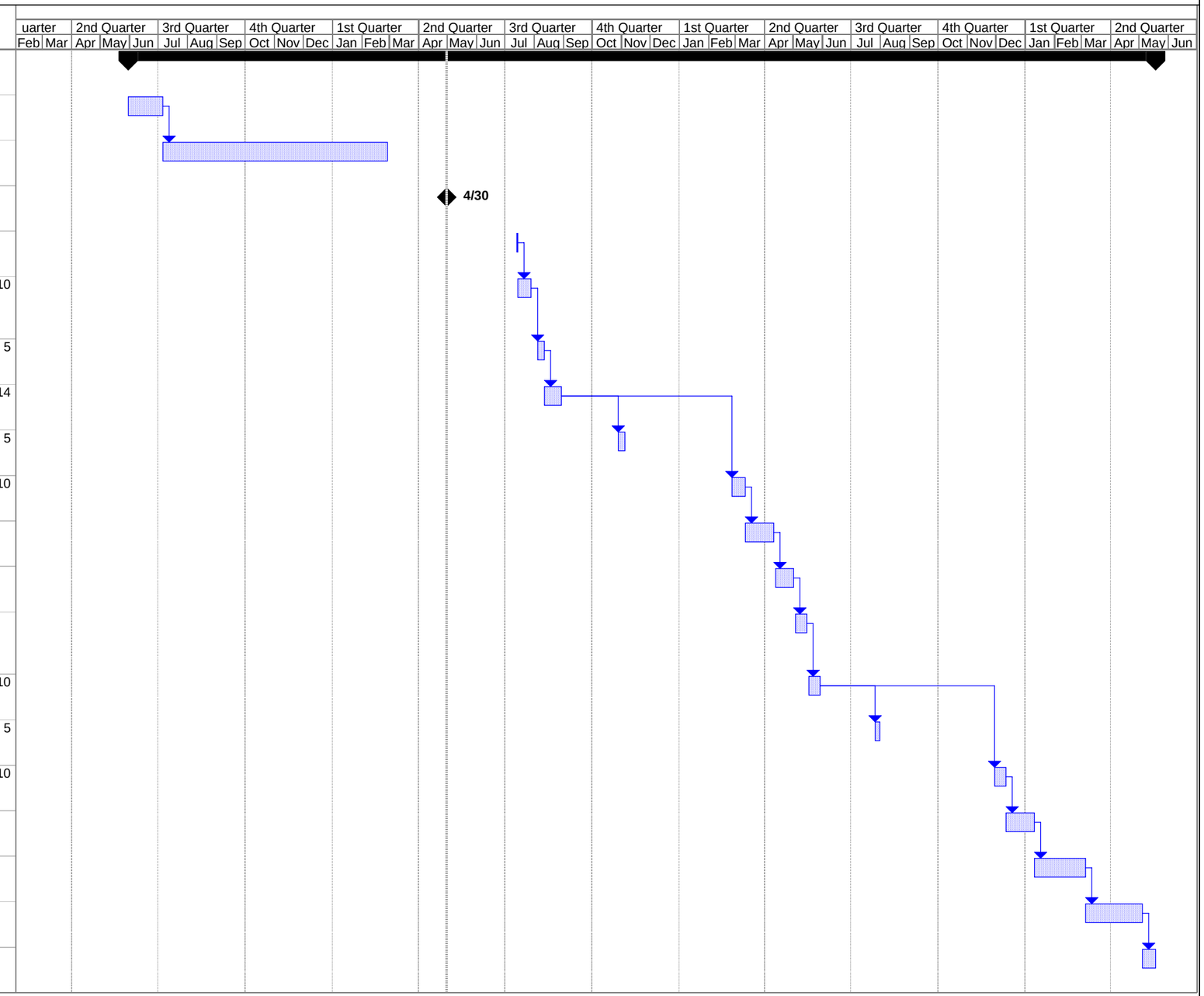

Project: Site 47 Pilot Study Schedule0
Date: Wed 4/30/08

Task | Split | Progress | Milestone | Summary | Project Summary | External Tasks | External Milestone | Deadline

Appendix A
XDD Work Plan

WORK PLAN
In-Situ Chemical Oxidation (ISCO) Pilot Study

SITE 47, NAVAL SUPPORT FACILITY, INDIAN HEAD

INDIAN HEAD, MARYLAND

Prepared for

CH2M HILL, INC.
13921 Park Center Road Suite 600
Herndon, VA 20171

Prepared by

STRATEGIC. ENVIRONMENTAL. SOLUTIONS.
22 Marin Way
Stratham, New Hampshire 03885

June 27, 2007

TABLE OF CONTENTS

1.0 INTRODUCTION 1
2.0 ALKALINE-ACTIVATED SODIUM PERSULFATE CHEMISTRY 2
3.0 ISCO PILOT STUDY DESIGN OVERVIEW 3
3.1 GENERAL DESIGN PARAMETERS 3
3.2 INJECTION WELL NETWORK AND INSTALLATION 7
3.2.1 Permanent Injection Well Locations 7
3.2.2 DPT Temporary Injection Locations 8
3.3 ISCO INJECTION EVENTS 8
3.3.1 ISCO Process Monitoring 9
3.3.2 Work Area Preparation and Logistics 10
3.3.3 Injection Equipment and Materials Handling 11
4.0 REPORTING 12
5.0 REFERENCES 13

TABLES

Table 1 Pilot Study Reagent Requirements: Sodium Persulfate
Table 2 Pilot Study Reagent Requirements: Sodium Hydroxide
Table 3 Estimated Pilot Study Reagent Application Schedule
Table 4 Anticipated Pilot Study Field Schedule
Table 5 Anticipated Equipment List

FIGURES

Figure 1 Typical Overdrill Design
Figure 2 Typical Injection Well Construction Design
Figure 3 Typical Monitoring Well Construction Design
Figure 4 Conceptual Site Equipment Layout
Figure 5 P&ID Pump and Manifold Skid Layout

1.0 INTRODUCTION

This Work Plan describes the XDD, LLC activities associated with a field-scale pilot study of in-situ chemical oxidation (ISCO) using alkaline-activated sodium persulfate (an oxidant) at Site 47 of the Naval Support Facility, Indian Head (NSF-IH) in Indian Head, Maryland (the Site). The remedial efforts will be focused on the area downgradient of Building 856 at the Site. This document provides the design basis and approach for the ISCO pilot study.

Investigations into the nature and extent of contamination and site characteristics were conducted CH2M HILL, Inc. (CH2M HILL). The contamination at Site 47 to be addressed in this pilot study is in the shallow groundwater, typically 6 feet to 18 feet below ground surface (bgs). The primary organic constituents of concern (COCs) in this area are carbon tetrachloride (CT) and tetrachloroethene (PCE). The COCs are thought to be sorbed onto soils, dissolved into the groundwater, and potentially present as residual dense non-aqueous phase liquids (DNAPL). Residual DNAPL contamination is anticipated at the site as several groundwater samples contained concentrations greater than 1% of the theoretical solubility limit; however, no separate phase of chlorinated solvents has been detected in monitoring wells to date.

Building 856 is used as an explosive research lab, and is zoned industrial. Located immediately downgradient (south) of the high concentration plume area is an explosive/magazine storage area. Additional Site 47 background information is provided in the CH2M HILL ISCO pilot study work plan.

Bench-scale studies were conducted to determine the effectiveness of selected oxidation and reduction technologies in treating a mixture of CT and PCE, to estimate the site-specific demand of reagents, and to identify potential side effects of the selected technologies. These include incompatibility with the current site use, mobilizing other regulated contaminants, and creating undesired by-products. The results of the bench-scale studies ("Results of Site 47 Bench-Scale Studies", CH2M HILL, 2007) are currently being reviewed by the Indian Head Installation Restoration Team.

The results of the bench-scale studies support the use of alkaline-activated persulfate for the effective treatment of the target COCs at Site 47. The degradation ratio of the persulfate mass required to treat the COC mass ranged from 31 to 94 mg/mg for the 50

grams per liter (g/L) and 200 g/L simulated injection solution concentrations, respectively. The data suggest that a multiple injection strategy with an injection solution concentration of approximately 50 g/L persulfate can significantly decrease the mass of CT and PCE found in the subsurface. Although during lab studies, shifts in geochemical conditions resulted in changes in dissolved metals concentrations, the long-term impact of an alkaline-activated persulfate application on dissolved metals should be evaluated on the pilot-scale level.

The primary objective of the pilot study is to collect data that will be used to design the full-scale remedy for the shallow groundwater contamination at Site 47. The specific objectives of the pilot study are described in Section 3 of the CH2M HILL ISCO pilot study work plan. The target area for the pilot study is approximately 3,750 square feet within the inferred residual DNAPL area from the vertical interval of 6 to 18 feet below ground surface (bgs) (Figures 1 and 2 of the CH2M HILL work plan). To assist CH2M HILL in achieving the pilot study objectives, XDD will perform the following tasks:

1. Perform the primary ISCO injection in the target area using two injection delivery methods: permanent injection wells and direct push technology (DPT) injection points.
2. Perform the secondary ISCO injection in select locations within the target area.
3. Summarize the results of the pilot study injection application with a comparison of permanent injection location results versus the DPT temporary injection location results; and provide recommendations on the design parameters and cost for implementing the technology at a full-scale level.

2.0 ALKALINE-ACTIVATED SODIUM PERSULFATE CHEMISTRY

Sodium persulfate is a strong oxidant which is similar to hydrogen peroxide in effectiveness but without many of the related environmental health and safety (EH&S) concerns. Optimal alkaline pH conditions (>10.5), which help promote the desired chemical reactions in-situ, will be established by injecting a sodium hydroxide (NaOH) solution.

Sodium persulfate ($Na_2S_2O_8$), sometimes referred to as sodium peroxydisulfate, is a key component of many industrial processes and commercial products. The persulfate anion ($S_2O_8^{2-}$) is the strongest oxidant of the peroxygen family of compounds, and is among the strongest oxidants commonly used for water and wastewater treatment. The persulfate anion can be activated by several methods to form the sulfate radical ($SO_4^{-}\bullet$), a strong and

relatively non-selective oxidant with a standard reduction potential of 2.6 Volts (Neta et al., 1977).

The site-specific activation method is based on the auto-decomposition of persulfate under alkaline conditions, which is believed to cause the persulfate molecule to break at the O-O bond, resulting in the formation of two sulfate radicals:

$$S_2O_8^{2-} \rightarrow 2\ SO_4^{-}\bullet$$

Additional propagation reactions are possible after this initial step (DeLatt and Le, 2005; Block et al., 2004), including the probable formation of the hydroxyl radical, but current research has not yet definitively identified all of these reactions.

3.0 ISCO PILOT STUDY DESIGN OVERVIEW

The pilot study target area will be treated with alkaline-activated sodium persulfate to oxidize the target COCs. Two distinct oxidant delivery strategies, temporary (using DPT) and permanent injection well construction will be utilized to complete the injection.

3.1 GENERAL DESIGN PARAMETERS

The following design elements were considered when developing the ISCO application to maximize oxidant-to-contaminant contact:

- Size of the target area and depth intervals for treatment, based on contaminant distribution and geology;
- The amount of oxidant mass required to degrade the estimated contaminant mass within the target area; and
- Oxidant injection parameters, including injection rates, number of pore volumes to be injected (i.e., defined as the volume of oxidant/reagent solution injected relative to the targeted soil pore space volume), and desired radius of influence (ROI) around each injection well.

The design of the ISCO injection strategy and the injection well network is often limited by:

- Maximum achievable rate of injection (which is limited by geology and the need to keep injection pressures within safe limits [e.g., not to exceed bearing pressure of soil, equipment ratings, etc.]);

- Oxidant stability in the subsurface (i.e., the rate at which the oxidant decomposes in the presence of target and non-target reactants, and auto-decomposition mechanisms). This is a key design parameter because if injection wells are spaced too far apart, the oxidant could be fully utilized before it migrates to the desired locations; and
- Preferential oxidant migration pathways, which can affect the oxidant distribution.

These factors influence the ability to distribute the oxidant from each injection location (i.e., effective ROI at which oxidant will be distributed). XDD considered the above factors in designing the proposed injection strategy, along with soil boring logs, hydraulic conductivity estimates, and our experience at similar sites. The primary concern in the injection well system design was the size of the injection interval (12 feet). This was addressed by designing a dual-level injection system to target each soil zone separately (rather than longer well screens spanning both soil intervals), thereby reducing the potential for preferential pathways. The temporary injection wells will be tested simultaneously alongside the permanent injection wells to study the effectiveness and efficiency of DPT injection. Since this is the field pilot injection test, XDD has conservatively estimated the maximum achievable injection rates and resulting injection pressures (to be verified during the field application) based on the soil descriptions and our experience. The overall mass loading of oxidant and reagent was based on a conservative assessment of the contaminant mass in the target area, the results of the bench-scale study, and other competing demands on the oxidant (e.g., SOD, auto-decomposition of persulfate, etc.). In the event that field conditions are not consistent with XDD's assumptions and/or findings from the bench-scale study, a change in the injection strategy will be implemented. If so, a memorandum explaining any changes will be submitted for approval before continuing. Tables 1 and 2 present the chemical requirement calculations for the pilot study.

Based on the above considerations and the bench-scale study results, the oxidant injection system will have the following general design parameters:

Parameter	**Specification**
Target Area/Interval	• Based on information provided by CH2M HILL: • The pilot target area is approximately 37 feet (transverse) by 102 feet (longitudinal), for a total area of 3,750 square feet. One-half of this area will be used

Parameter	Specification
	to evaluate injection through permanent wells; and one-half for the temporary injection points (DPT). • The target interval is from 6 to 18 feet bgs and consists of sand and silty sand). This interval will be addressed using two (2) six-foot injection intervals for the permanent wells and four (4) three-foot intervals for the DPT locations.

Contaminant Mass	• Approximately 1,500 lbs of total COC mass was estimated for the pilot study target area, based on a conservatively assumed average COC concentration of 200 mg/Kg throughout the target area.
	  • The primary injection is designed to treat up to 1,000 pounds (lbs) of COCs.
	  • The secondary injection is designed to treat up to 500 lbs of COCs.

Oxidant/Reagent Mass	• The required oxidant mass (up to 70,400 lbs of sodium persulfate) was developed using degradation ratios identified in the bench-scale tests for the targeted COC mass. This oxidant mass will be applied through two injection events.
	• Primary ISCO Injection:
	  • This first injection will address the full target area (3,750 square feet).
	  • Permanent Well Locations: Up to 23,100 lbs of sodium persulfate will be applied in up to 51,000 gallons of injection water (equivalent to an injection solution concentration of approximately 55 g/L) to 14 separate locations. Each well location will receive up to 1,650 lbs of oxidant dissolved in up to 3,643 gallons of water.
	  • DPT Locations: Up to 23,100 lbs of sodium persulfate will be applied in up to 51,000 gallons of injection water (equivalent to an injection solution concentration of approximately 55 g/L) to 15 separate locations. Each DPT location will receive up to 1,540 lbs of oxidant dissolved in up to 3,400 gallons of water.

Parameter	Specification

	• Secondary ISCO Injection:
	  • This second injection will address up to one-half of the full target area (1,875 square feet).
	  • Permanent Well Locations: Up to ~12,100 lbs of sodium persulfate dissolved in up to ~26,000 gallons of injection water (equivalent to an injection solution concentration of approximately 55 g/L), will be divided within the target area following a review of the primary application.
	  • Temporary Well Locations: Up to ~12,100 lbs of sodium persulfate, dissolved in up to ~26,000 gallons of injection water (equivalent to an injection solution concentration of approximately 55 g/L), will be divided within the target area following a review of the primary application.
	• pH Adjustment:
	  • Up to 21,000 and 11,000 lbs of sodium hydroxide will be injected (simultaneously with the oxidant within the total injection volume) during the primary and secondary ISCO injection events, respectively (Figure 4). This quantity is required to adjust the pH to alkaline conditions (>10.5).

Radius of Influence	• Based on soil type and XDD's experience, the assumed achievable design ROI at the Site was approximated at 10 feet for the permanent wells, and 7 feet for the temporary injection locations.
Injection Rates	• For design purposes, the assumed achievable injection rate for each location will range from 5 to 10 gallons per minute (gpm).
Injection Pressures	• Typical injection pressures at the well head range from 0-10 pounds per square inch (psi) for sands and silty sands. XDD will adjust injection strategies (e.g., reduce individual well flow rate) if operating pressures exceed 10 psi at the wellheads .

3.2 INJECTION WELL NETWORK AND INSTALLATION

The pilot study will require the installation of up to 14 permanent injection wells coupled at 7 locations and the advancement of 15 DPT temporary injection locations. The approximate injection locations and the layout of the injection grid are shown on Figure 3 of the CH2M HILL work plan.

3.2.1 Permanent Injection Well Locations

Due to the thickness of the vertical injection interval (12 feet), the permanent injection well locations will require a dual-level injection well network screened across the target interval. The dual-level well network design reduces the potential impact of subsurface preferential pathways (i.e., oxidant following the path of least resistance), and allows for more effective distribution of oxidant.

The dual-level well network consists of seven injection wells per vertical interval (a total of 14 wells):

- The shallow zone network will include 7 injection wells designed to target an interval (including sand pack and screen length) from approximately 6 to 12 feet bgs (on average, actual well depths to be adjusted based on field conditions).
- The deep zone network will include 7 injections wells designed to target the interval (including sand pack and screen length) from approximately 12 to 18 feet bgs (on average, actual well depths to be adjusted based on field conditions).

A CH2M HILL drilling subcontractor (under CH2M HILL's oversight) will install the permanent injection well locations using hollow stem auger drilling techniques. Well screen placement relative to distinct soil types and characteristics is a critical factor in the success of the ISCO treatment. XDD will be consulted during the drilling activities to assist in well screen placement.

The well screen depth intervals will be adjusted, as necessary, based on the soil characteristics and contaminant intervals identified by field screening.

Well construction (Figure 2) of the permanent well locations will consist of 2-inch Schedule 40 PVC screen (maximum of 6 feet in length, Johnson Screens® Vee-wire screen type) and riser materials. The wells will be completed with a sand pack extending to at least one foot

above the screen interval, a two-foot bentonite seal extending above the sand pack, and a grout/bentonite (or similar) mixture to grade surface. Connections in the PVC pipe will be threaded. The distance from the bottom of the boring to the top of the sand pack will be no greater than six feetA road box enclosure (at least 16 inches in diameter) and finished concrete pad (squared off at ground surface) will be placed around the completed well. Prior to well completion, a 2-inch Schedule 40 PVC female adapter (SlipxNPT) and a male portion of the cam and groove flow coupling will be permanently installed/glued to the end of the riser materials.. CH2M HILL is responsible for permanent injection well construction per XDD installation specifications outlined on Figure 2. If the field conditions warrant a change in the presented well construction design XDD will be consulted prior to the completion of that well.

All permanently injection wells will be developed by CH2M HILL after installation by pumping the well until the effluent is clear or until a volume five times the borehole volume has been evacuated.

3.2.2 DPT Temporary Injection Locations

Temporary injection locations will be advanced to target depth utilizing DPT drilling techniques. Oxidant will be introduced to the soil through a slotted screen adapter at the bottom of the drilling equipment. The screen interval of the injection adapter (approximately three feet long per manufacturer's specifications) will be raised from the bottom of the boring in three-foot intervals (treating each sub-interval completely) until the entire target interval has been treated for the selected location. It is anticipated that 2 temporary injection locations will be injected into simultaneously to increase the efficiency of the injection.

The DPT temporary injection locations will be advanced by Earth Data Northeast, Inc. XDD will provide drilling oversight. Oxidant handling, mixing and pumping will be performed by XDD during the DPT injection activities. Figure 2 presents the proposed DPT injection design.

3.3 ISCO INJECTION EVENTS

Two ISCO injection events (primary and secondary) are proposed for the pilot study. The secondary ISCO event will be performed after intermediate sampling has been completed. The secondary ISCO event is intended to treat any hot-spots remaining above the specified

performance criteria and/or to verify the effectiveness of one or both of the injection strategies. It is expected that the target area for the Secondary ISCO event will be one-half of the target area treated during the primary ISCO injection event. The estimated schedule of reagent loading and anticipated volumes for each injection location is presented as Table 3. The field schedule is presented as Table 4. Implementation of the pilot study in accordance with Tables 3 and 4 are both lithological- and weather-dependent. Actual schedules will be determined based on field conditions.

All work conducted by XDD will be completed in accordance with the Site-specific Health and Safety Plan that will be submitted as a separate deliverable. The baseline and performance monitoring associated with the pilot study will be conducted by CH2M HILL, as described in CH2M HILL work plan.

3.3.1 ISCO Process Monitoring

During the ISCO injections, the following parameters will be monitored by XDD:

- Total oxidant/reagent volumes injected per well,
- Injection flow rates and wellhead pressures,
- Water levels at available observation wells ,
- Concentrations of oxidant/reagents (field kit methods, e.g., persulfate using a CHEMetrics CHEMets® Kit), and
- Periodic field water quality parameters (ORP, pH, DO, temperature, and conductivity) at selected wells, and in-situ oxidant concentrations. This will be conducted on an as-needed basis to evaluate oxidant distribution in the subsurface (but at a minimum of once per day at one monitoring well).

ISCO treatment involves injection of various chemicals into the subsurface under pressure. This can create a groundwater “mounding” effect (i.e., rise in water table elevations) in the vicinity of the injector wells. If mounding is not controlled, this can create the potential for daylighting of liquids to the surface (i.e., migration of groundwater and oxidant/reagents to the surface through cracks or penetrations in the ground). To guard against potential daylighting of oxidant/reagent liquids, water levels in available monitoring points will be continuously monitored during the active ISCO injections. Though it is not expected, if water levels rise to within three feet below the ground surface, the situation will be assessed to determine if continued operation would cause oxidant (not water) to “daylight”. If

necessary, ISCO injections will be slowed or halted to allow the groundwater levels to recover to equilibrium.

3.3.2 Work Area Preparation and Logistics

Prior to initiating of the planned field activities, the area around the building will be cleared by the CH2M HILL and/or Site personnel.

Work Area Layout:

The general layout of the work area is shown in Figure 4. The work area will consist of reagent storage areas/containment, equipment storage areas, injection manifold layouts, and health and safety areas.

Secondary Containment:

Equipment skids, oxidant/reagent tanks, and other fixed equipment will be placed on chemical resistant secondary containment tarps (non-slip) to prevent accidental drips and spills to the ground surface.

Waste Storage - Satellite Accumulation:

Purge water and decontamination water will be drummed and appropriately labeled as directed by CH2M HILL. Drums will be staged within the work area on secondary containment pallets (designated satellite accumulation area).

Electrical:

Most of XDD's equipment will operate on standard 110 V (60 Amp maximum), with the exception of one 220 V (10 Amp maximum) centrifugal water pump and a 480 V (15 Amp maximum) persulfate batching unit. Ground-fault circuit interrupt (GFCI) devices will be used on all 110 V equipment. CH2M HILL will be responsible for the oxidant batching and injecting equipment electrical supply.

Make-Up Water:

Up to approximately 102,000 gallons and 52,000 gallons of water will be required for the Primary and Secondary ISCO applications, respectively. Due to the large quantity of water required, water and chemical/reagent batch tanks will be filled with potable water from a source provided by the Site that is capable of sustained flow rate of 50 gallons per minute.

3.3.3 Injection Equipment and Materials Handling

The sodium persulfate will be delivered to the Site in a dry granular form which will be diluted with water into a concentrated oxidant batch (less than 300 g/L). The concentrated oxidant solution will then be blended together (with an in-line mixer) with the sodium hydroxide solution and make-up water prior to injection. The combined flow of concentrated oxidant solution, sodium hydroxide solution, and make-up water will total approximately 5 to 10 gpm per well (deep/shallow well, and DPT injection well networks, respectively). Actual flow rates may vary depending on site characteristics and soil/oxidant interaction. The final injection oxidant solution concentration, after blending, will be approximately 55 g/L (as $Na_2S_2O_8$). Figure 5 presents the process and instrumentation diagram (P&ID) of the injection equipment skid. Table 5 provides a list of anticipated equipment that will be used in the pilot study.

The ISCO system will consist of the following major equipment:

- A water tank capable of holding up to 20,000 gallons
- Up to four chemically compatible tanks, up to 2,400 gallons, for mixing and storing the chemical reagents
- Industrial grade tank mixers (or equivalent)
- <u>XDD ISCO Injection Skids</u>: XDD owns and maintains the majority of injection process equipment and instrumentation that will be used. The equipment will be assembled and tested at XDD's office prior to mobilization to the Site.
    - The pump system will consist of chemical compatible centrifugal and/or diaphragm pumps capable of 0-50 gpm flow rates.
    - Associated piping/flow control valves will be assembled to control the flow of water and chemicals (persulfate and hydroxide) to the mixing skid, and flow of diluted chemicals to the injection wells.
    - Pressure/flow gauges will be assembled at the water, chemical, mixing, and injection manifold skids to monitor in-line pressures and total/instantaneous flow.
    - Check valves will be assembled at key locations to prevent back flow of chemicals.
    - Pressure relief valves, with associated "blow off" lines, will be assembled at key locations to prevent equipment damage (i.e. over-pressure/bursting). Pressure relief valves will be set at 80 PSI and all blow off lines will be directed to a secondary container.

  - Persulfate batching unit for hands free transport of dry chemical to mixing/batching tanks.
  - All equipment will be self contained with integral secondary containment.
- Injection Manifold System: A dry disconnect, retractable hose system, consisting of flexible braided PVC hose, eight-way distribution header (for distributing the oxidant solution to up to eight injection wells at a time), will be assembled.
- Wellheads: Wellheads with pressure gauges and dry disconnect fittings (compatible with the retractable hose system) will be installed at the top of the injection wells for connecting to the chemical injection manifold system.

When initiating the injection system, a water test will be performed to ensure secure fitting connections at all manifold/well head points. A small quantity of water(up to 50 gallons) will also be injected into each well to test the integrity of the well construction and the ability to achieve the desired injection rates.

4.0 REPORTING

XDD will provide brief status reports and communications to CH2M HILL and IHIRT throughout the duration of the remedial program.

Following each ISCO application and the receipt of the associated post-injection monitoring data from the laboratory, XDD will prepare a report summarizing the results, including:

- A brief summation of each oxidation application and monitoring events to present the key findings.
- Groundwater results plotted as isoconcentration maps to illustrate the estimated oxidant distribution, and target contaminant reduction.
- Comparison of baseline soil concentration data to post-injection sampling data to evaluate the effectiveness of the treatment.
- Program conclusions and recommendations including full-scale costing and design parameters recommendations.

5.0 REFERENCES

Block, P.A.; Brown, R.A. and Robinson, D. (2004), "Novel Activation Technologies for Sodium Persulfate *In Situ* Chemical Oxidation," *Preprint: Proceedings of the Fourth International Conference on the Remediation of Chlorinated and Recalcitrant Compounds.*

CH2M HILL. (2007), "Results of Site 47 Bench-Scale Studies, Naval Support Facility, Indian Head, Indian Head, Indian Head, Maryland – Draft Memorandum", May.

De Latt, J. and Le, T.G., (2005) "Kinetics and Modeling of the Fe(III)/H_20_2 System in the Presence of Sulfate in Acidic Aqueous Solutions," *Environmental Science & Technology,* 39(6), 1811-1818.

Neta, P; Madhavan, V.; Zemel, H. and Fessenden, R.W., (1977) "Rate Constants and Mechanism of Reaction of SO_4^{-}• with Aromatic Compounds," *Journal of the American Chemical Society*, 99:1, 163-164.

TABLES

Table 1
Pilot Study Reagent Requirements: Sodium Persulfate

Site 47, NSF-IH, Indian Head, Maryland
XDD Project 95479.01

ISCO Application	Target Contamination Concentration[1] (mg/Kg)	Target Area (ft^2)	Interval (ft)	Target Volume of Soil (ft^3)	Target Mass of Contaminant[2] (lb)	Degradation Ratio[3] (lb oxidant/lb COC)	Safety Factor	Minimum Mass of Sodium Persulfate (lb)	Mass of Sodium Persulfate to be Applied[4] (lb)
Primary	200	3,750	12	45,000	991	36	1.25	44,604	46,200
Secondary	200	1,875	12	22,500	496	36	1.25	22,302	24,200
								Total	**70,400**

Notes:

1. Estimated based on Site information and discussion with CH2M HILL to use 20 times the theoretical soil equivalent (calculated from maximum groundwater concentration)
2. Based on calculation involving soil mass in target area and assumed target contaminant concentration and bulk soil density of 50 Kg/ft^3.
3. Based on degradation ratios observed in the Site-specific bench study.
4. Amount is greater than minimum mass of sodium persulfate required based on the calculations, and corresponds to a typical delivery amount of the oxidant.

Table 2
Pilot Study Reagent Requirements: Sodium Hydroxide

Site 47, NSF-IH, Indian Head, Maryland
XDD Project 95479.01

ISCO Application	Application Volume (gallons)	Mass of Sodium Persulfate (lbs)	Base Buffering Capacity[1] (lbs)	Sodium Persulfate Decomposition[2] (lbs)	Minimum Mass of Sodium Hydroxide (lbs)	Estimated Number of Drums[3]	Mass of Sodium Hydroxide to be Applied (lbs)
Primary	102,000	46,200	5,102	15,529	20,632	59	20,650
Secondary	52,000	24,200	2,601	8,134	10,736	31	10,850
					Total	**90**	**31,500**

Notes:

1. Mass of sodium hydroxide that corresponds to the 0.12 M NaOH required to satisfy the base buffering capacity of the soil determined in the bench scale tests (25% safety factor).

2. Based on standard FMC protocol, mass of sodium hydroxide necessary to account for the likely acid generation associated with sodium persulfate decomposition (2:1 ratio).

3. Corresponding number of 55-gallon drums necessary to supply a sufficient mass of sodium hydroxide.

Table 3
Estimated Pilot Study Reagent Application Schedule

Site 47, NSF-IH, Indian Head, Maryland
XDD Project 95479.01

Injection Location	Design ROI (feet)	Vertical Interval (feet)	Injection Flow Rate (gpm)	Design Injection Volume (gal)	Sodium Persulfate Concentration (g/L)	Sodium Persulfate (lbs)	Sodium Hydroxide (lbs)
IS47IW01S	10	6	5	3,643	54	1,650	737
IS47IW01D	10	6	5	3,643	54	1,650	737
IS47IW02S	10	6	5	3,643	54	1,650	737
IS47IW02D	10	6	5	3,643	54	1,650	737
IS47IW03S	10	6	5	3,643	54	1,650	737
IS47IW03D	10	6	5	3,643	54	1,650	737
IS47IW04S	10	6	5	3,643	54	1,650	737
IS47IW04D	10	6	5	3,643	54	1,650	737
IS47IW05S	10	6	5	3,643	54	1,650	737
IS47IW05D	10	6	5	3,643	54	1,650	737
IS47IW06S	10	6	5	3,643	54	1,650	737
IS47IW06D	10	6	5	3,643	54	1,650	737
IS47IW07S	10	6	5	3,643	54	1,650	737
IS47IW07D	10	6	5	3,643	54	1,650	737
Total by Injection Type (Permanent)				**51,000**		**23,100**	**10,316**
IS47IT01	7	12	10	3,400	54	1,540	688
IS47IT02	7	12	10	3,400	54	1,540	688
IS47IT03	7	12	10	3,400	54	1,540	688
IS47IT04	7	12	10	3,400	54	1,540	688
IS47IT05	7	12	10	3,400	54	1,540	688
IS47IT06	7	12	10	3,400	54	1,540	688
IS47IT07	7	12	10	3,400	54	1,540	688
IS47IT08	7	12	10	3,400	54	1,540	688
IS47IT09	7	12	10	3,400	54	1,540	688
IS47IT10	7	12	10	3,400	54	1,540	688
IS47IT11	7	12	10	3,400	54	1,540	688
IS47IT12	7	12	10	3,400	54	1,540	688
IS47IT13	7	12	10	3,400	54	1,540	688
IS47IT14	7	12	10	3,400	54	1,540	688
IS47IT15	7	12	10	3,400	54	1,540	688
Total by Injection Type (Temporary)				**51,000**		**23,100**	**10,316**
Total for Primary Application				**102,000**		**46,200**	**20,632**
						88,129	234,169
						Molar Ratio	**2.66**

Note: Application loading is approximate and dependent on site (including lithology) and weather conditions. Actual schedule will vary.

Table 4
Anticipated Pilot Study Field Schedule

Site 47, NSF-IH, Indian Head, Maryland
XDD Project 95479.01

Day	XDD Personnel	Activity
		Week 1
Sunday	3	Travel to Indian Head location
Monday	3	Site set up: Equipment and rental deliveries
Tuesday	3	Site set up: Chemical deliveries and staging
Wednesday	4	Site set up: Water test system at permanent injection locations
Thursday	4	Inject reagents at permanent and temporary locations
Friday	3	Short field day: Inject reagents at permanent and temporary locations, minor system break-down for weekend, and travel
Saturday		Off
		Week 2
Sunday	3	Travel to Indian Head location
Monday	3	Minor site set up, inject reagents at permanent and temporary locations
Tuesday	3	Inject reagents at permanent and temporary locations
Wednesday	3	Inject reagents at permanent and temporary locations
Thursday	3	Inject reagents at permanent and temporary locations
Friday	3	Short field day: Inject reagents at permanent and temporary locations, minor system break-down for weekend, and travel
Saturday		Off
		Week 3
Sunday	3	Travel to Indian Head location
Monday	3	Minor site set up, inject reagents at permanent and temporary locations
Tuesday	3	Inject reagents at permanent and temporary locations
Wednesday	3	Inject reagents at permanent and temporary locations
Thursday	3	Inject reagents at permanent and temporary locations if necessary, Begin demobilization
Friday	3	Demobilize from Site.
Saturday		Off

Note: Schedule is dependent on site and weather conditions. Actual schedule will vary.

Table 5
Anticipated Equipment List

Site 47, NSF-IH, Indian Head, Maryland
XDD Project 95479.01

DPT Installation	
	Direct push drill rig
Distribution Skid	
	Injection lines leading to DPT wells and injection wells (shown in Figures 1 and 2) including flow control valves, flow meters, flow totalizers and pressure gauges. Secondary containment unders skid.
Pump Skid	
	Two pumps which include centrifugal pumps: - Price HP75 or Price OH75 pumps for reagent solution. - Price OH75 or Ebara A2CDU pumps for water. Piping, flow control valves flow meters, flow totalizers, pressure gauges (Figure 2) Tent to keep the pumps out of the elements Secondary containment under skid
Batching system	
	Persulfate batching system which could include mixers, a hopper and a screwdrive auger. Three pumps which could include centrifugal and/or diaphragm: - Price HP75 or Price OH75 for sodium persulfate. - Diaphragm (Wilden A1 or A2) pump for sodium hydroxide. - Price HP75, Price OH75 or Ebara A2CDU for transfer water. Air compressor for the diaphragm pumps Negative pressure fan with filter to collect chemical dust Polymer tanks - 1,000 gal batching tank (mixture of sodium hydroxide and sodium persulfate). - 2,400 gal for reagent storage tank (mixture of sodium hydroxide and sodium persulfate). Tent to keep the batching equipment out of the elements. Secondary containment under batching system.
Equipment/Chemical Storage/Handling	Persulfate Storage - Up to three storage containers (standard freight containers/Conex box) or fenced area for sodium persulfate pallets (~52,000 lbs) Sodium hydroxide Storage - Up to two storage containers (standard freight containers/Conex box) or fenced area (~21,000 lbs of NaOH) Equipment - Up to two storage containers (standard freight containers/Conex box) for injection equipments. Forklift to handle the pallets.
Other Equipment	
	Tanks for storing water depending on water source (21,000 gal frac tank/1,000gal/500 gal). Office trailer for HASP station.

FIGURES

Overdrill Design

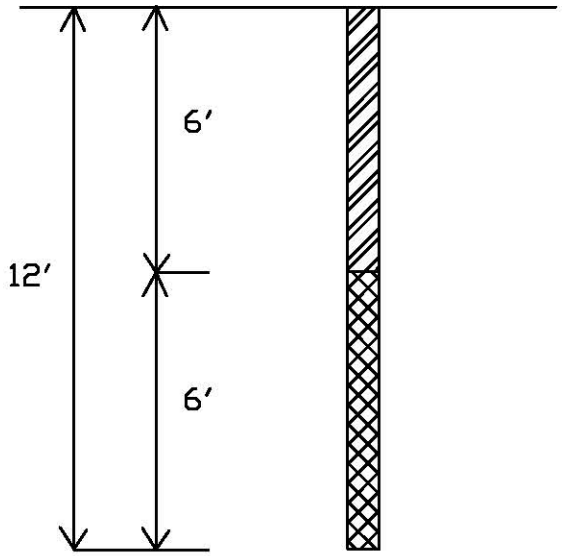

LEGEND

- GROUT (PORTLAND CEMENT WITH ~5% w/w BENTONITE)
- BENTONITE SEAL

XDD
STRATEGIC. ENVIRONMENTAL. SOLUTIONS.

SCALE: AS SHOWN	TITLE: TYPICAL OVERDRILL DESIGN SITE 47 INDIAN HEAD, MD
DATE: June 26, 2007	
PROJECT NO.: 95479	
CLIENT: CH2M HILL	
DRAWN BY: DN	DRAWING NO.: FIGURE 1
CHECKED BY: AL	REV: 1
PROJ. MGMT. APPROVAL: AL	

Typical Injection Well Design (Deep Zone)

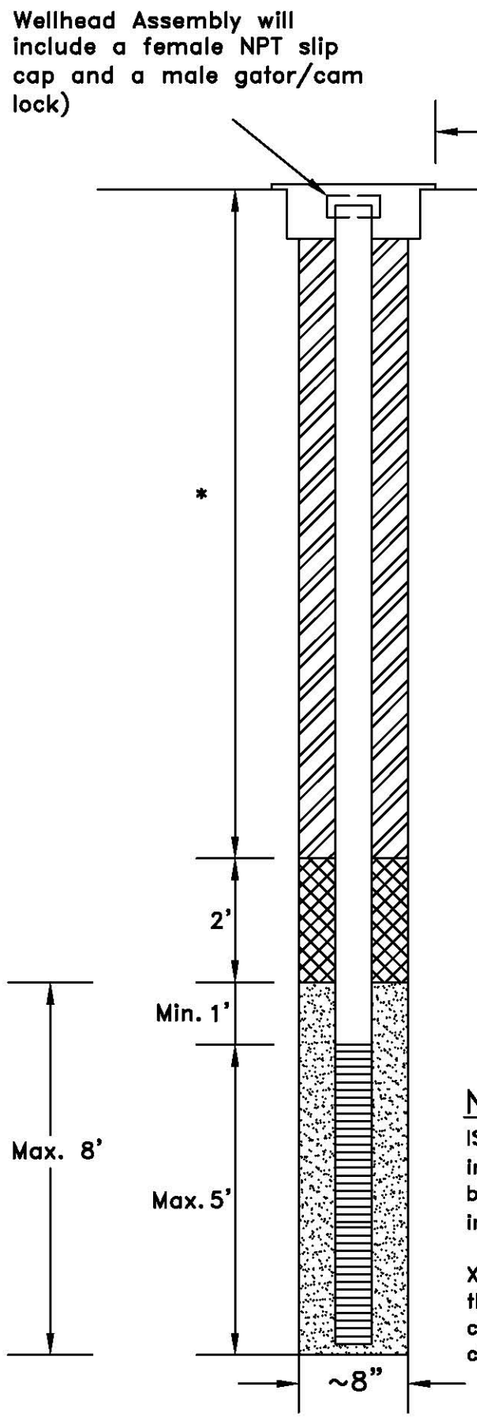

Typical Injection Well Design (Shallow Zone)

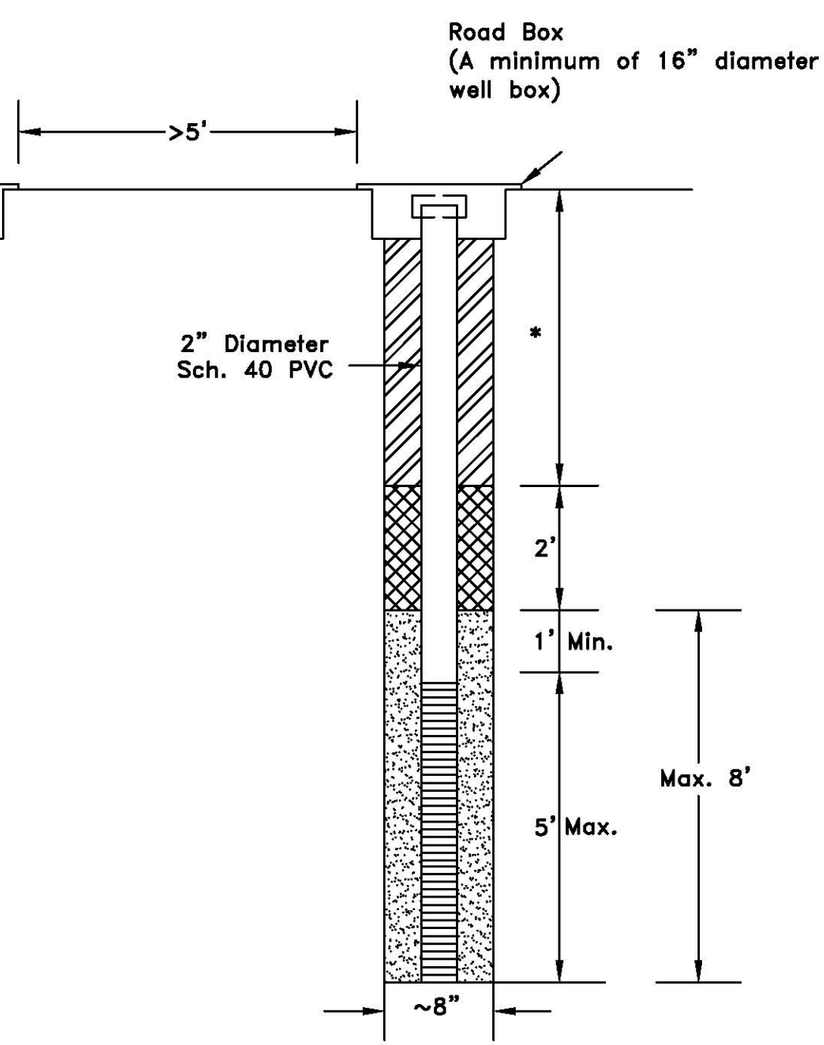

Typical Temporary Injection Well Design

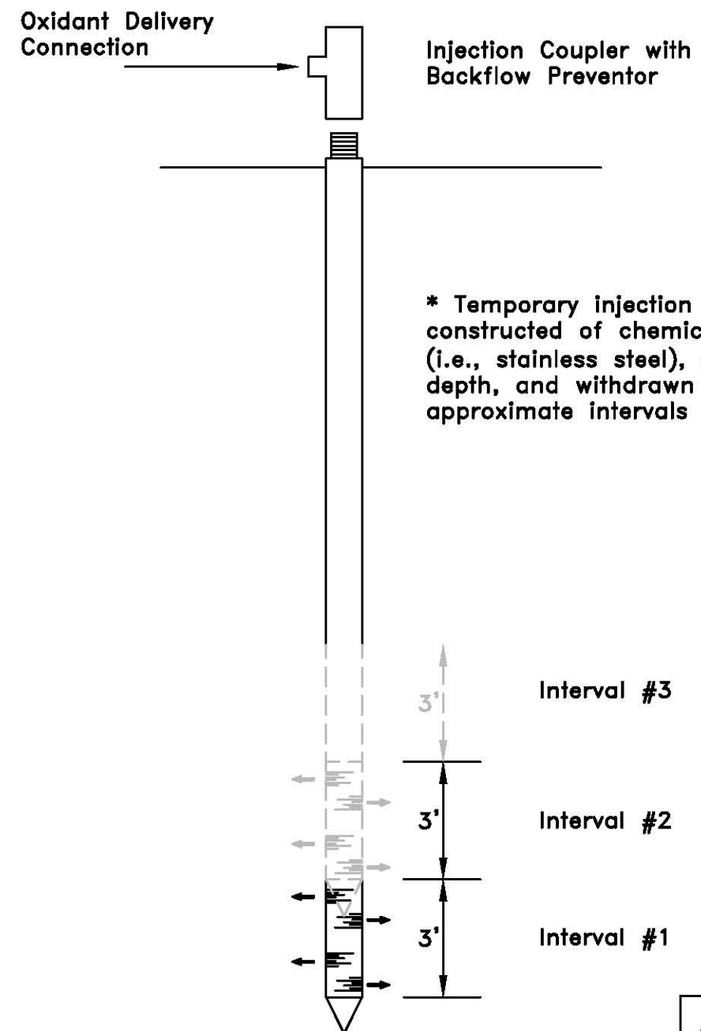

* Temporary injection equipment will be constructed of chemically–resistant material (i.e., stainless steel), advanced to target depth, and withdrawn from bottom to top in approximate intervals as shown.

NOTE

IS47BT02/IS47IW02S will include bentonite at 6"–12" below the bottom of the injection well (12–13' bgs).

XDD will be contacted in the event that field conditions necessitate changes from this design.

LEGEND

- GROUT (PORTLAND CEMENT WITH 5% w/w BENTONITE)
- BENTONITE SEAL (#10–#20 GRANULAR BENTONITE REQUIRED IF SEAL IS ABOVE WATER TABLE)
- #10–#20 SILICA SAND (~1.01 MM EFFECTIVE SIZE)
- 0.02" CONTINUOUS JOHNSON VEE–WIRE SCREENS
- * – ACTUAL DEPTH TO BE DETERMINED IN THE FIELD

XDD
STRATEGIC. ENVIRONMENTAL. SOLUTIONS.

SCALE: AS SHOWN	TITLE: TYPICAL INJECTION WELL CONSTRUCTION DESIGN SITE 47 INDIAN HEAD, MD
DATE: June 26, 2007	
PROJECT NO.: 95479	
CLIENT: CH2M HILL	
DRAWN BY: DN	DRAWING NO.: FIGURE 2
CHECKED BY: AML	REV: 1
PROJ. MGMT. APPROVAL: AML	

Typical Monitoring Well Design

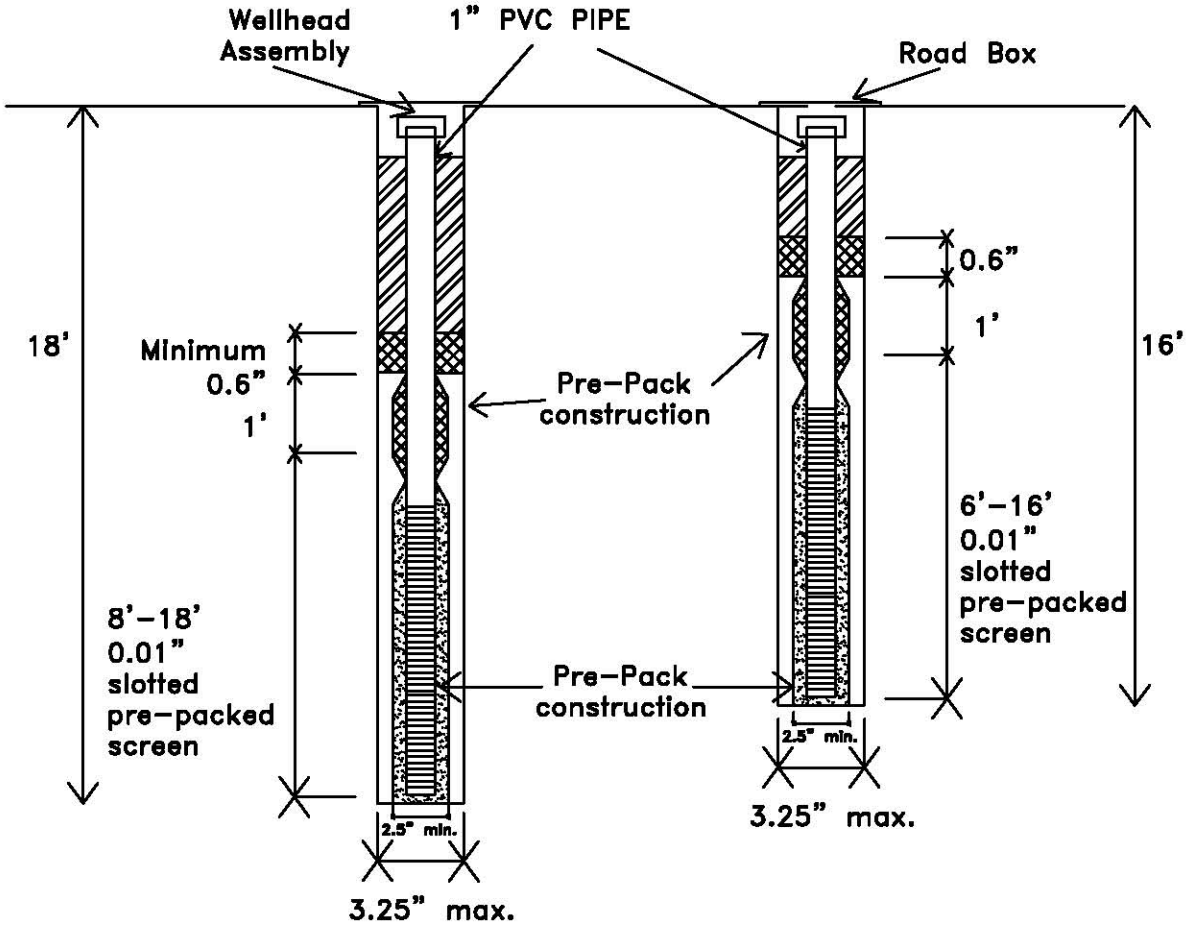

Northern Cluster Well Southern Cluster Well

LEGEND

- GROUT (PORTLAND CEMENT WITH ~5% w/w BENTONITE)
- BENTONITE SEAL/PRE-PACK
- PRE-PACK #10-#20 OR #20-#40 SAND
- 0.010" SLOTTED PRE-PACKED SCREENS

XDD
STRATEGIC. ENVIRONMENTAL. SOLUTIONS.

SCALE: AS SHOWN	TITLE: TYPICAL MONITORING WELL CONSTRUCTION DESIGN SITE 47 INDIAN HEAD, MD
DATE: June 26, 2007	
PROJECT NO.: 95479	
CLIENT: CH2M HILL	
DRAWN BY: DN	DRAWING NO.: FIGURE 3
CHECKED BY: AL	REV: 1
PROJ. MGMT. APPROVAL: AL	

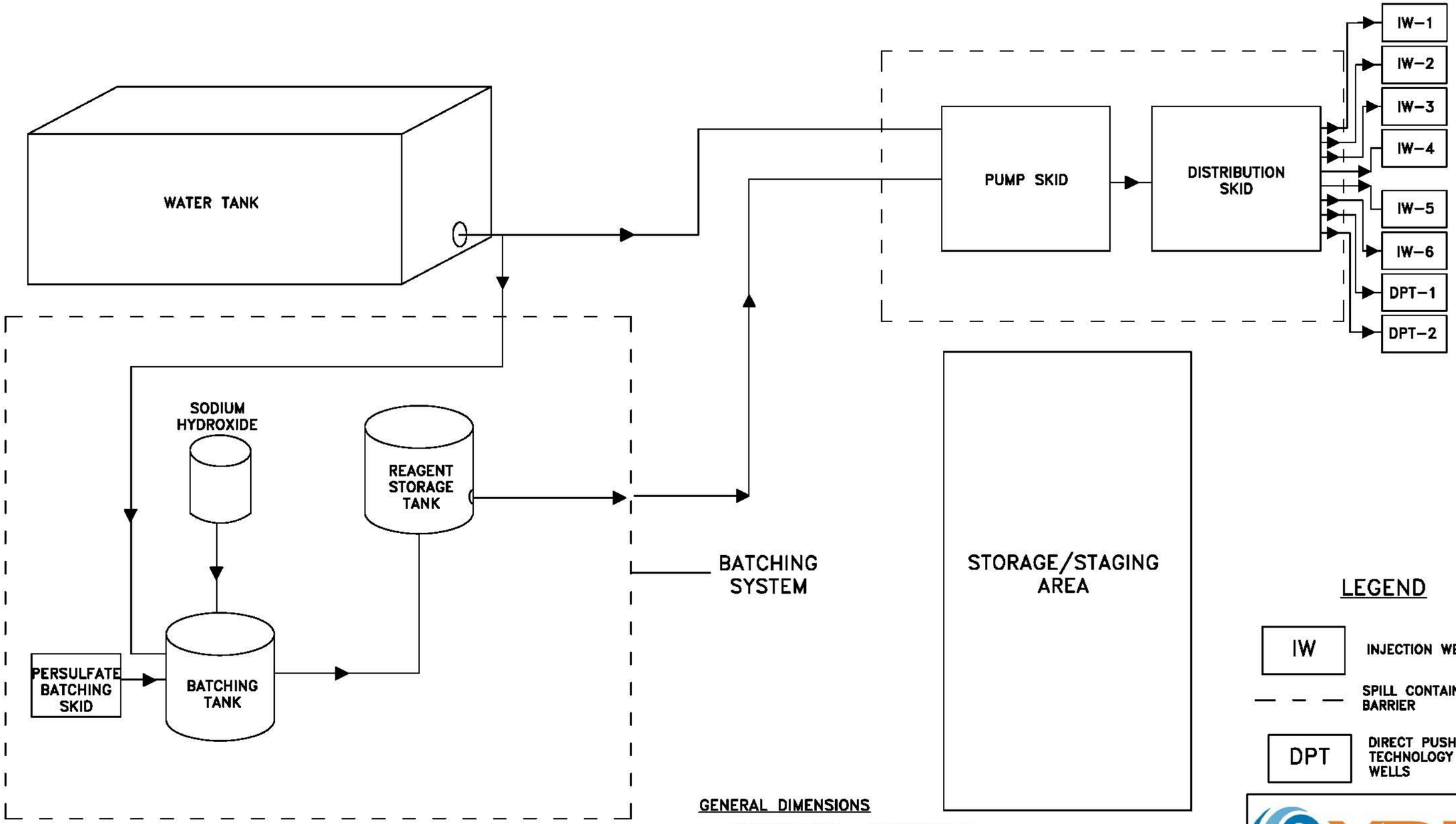

LEGEND

IW	INJECTION WELLS
— — —	SPILL CONTAINMENT BARRIER
DPT	DIRECT PUSH TECHNOLOGY WELLS

Each area should be in close proximity (<200 feet) to the other areas, unless approved by XDD.

Area between storage area and batching area should be able to accomodate forklift traffic.

GENERAL DIMENSIONS

AREA	APPROXIMATE DIMENSIONS	APPROXIMATE AREA
BATCHING SYSTEM	15' X 30'	450 FT^2
WATER TANK	12' X 40'	480 FT^2
PUMP/DISTRIBUTION SKIDS	12' X 20'	240 FT^2
STORAGE/STAGING AREA	50' X 50'	2500 FT^2

XDD

SCALE: NOT TO SCALE	TITLE: CONCEPTUAL SITE EQUIPMENT LAYOUT SITE 47 INDIAN HEAD, MD
DATE: June 26, 2007	
PROJECT NO.: 95479	
CLIENT: CH2M HILL	
DRAWN BY: DKR	DRAWING NO.: FIGURE 4
CHECKED BY: BAS	REV:
PROJ. MGMT. APPROVAL: BAS	

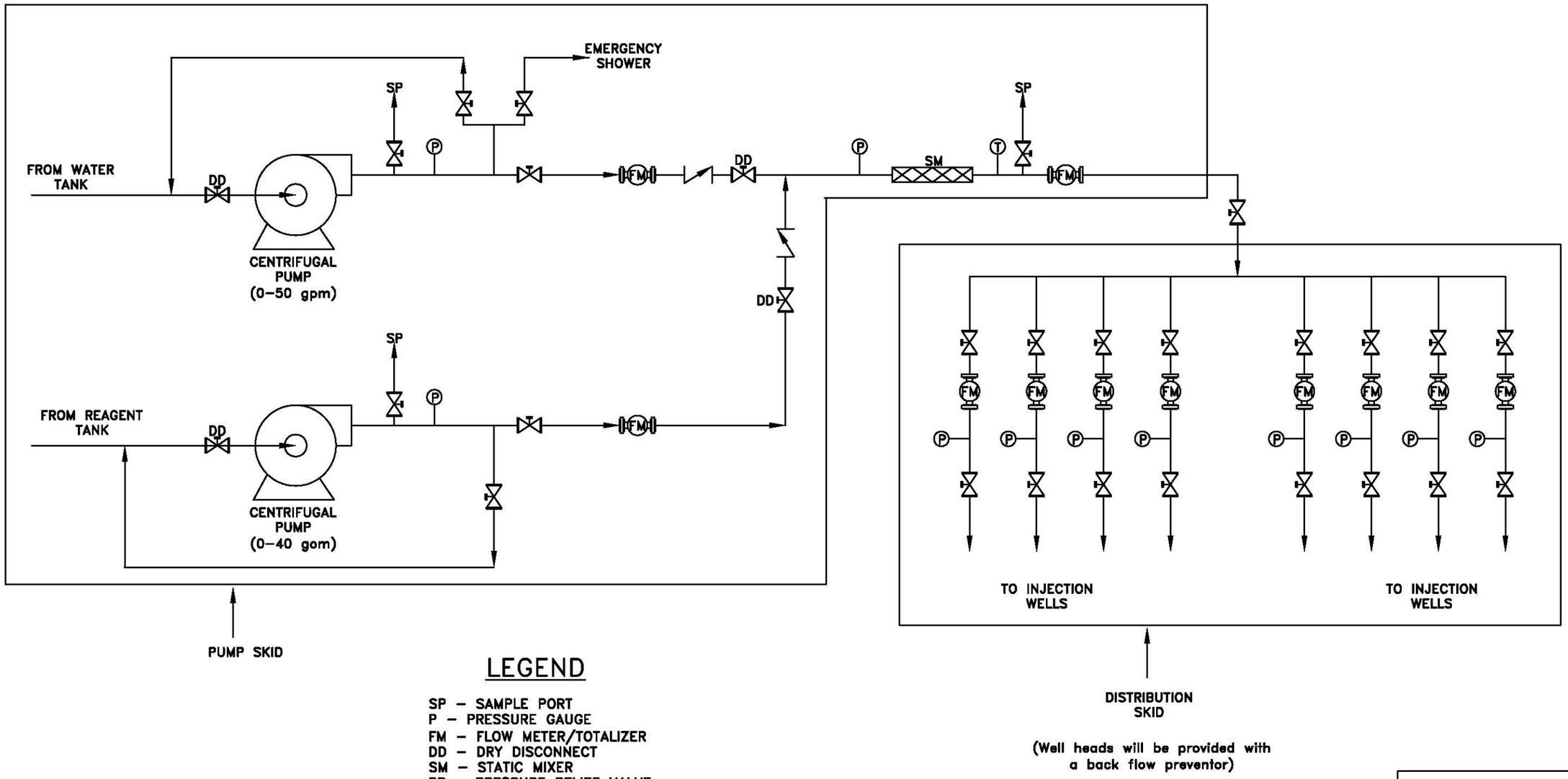

LEGEND

SP – SAMPLE PORT
P – PRESSURE GAUGE
FM – FLOW METER/TOTALIZER
DD – DRY DISCONNECT
SM – STATIC MIXER
PR – PRESSURE RELIEF VALVE
FT – FLOW TOTALIZER
T – TEMPERATURE GAUGE

– BALL VALVE

– CHECK VALVE

REAGENT SOLUTION– SODIUM PERSULFATE AND SODIUM HYDROXIDE

NOTE:

PRESSURE GAUGE NOT TO EXCEED 75 PSI

XDD
STRATEGIC. ENVIRONMENTAL. SOLUTIONS.

SCALE: NOT TO SCALE	TITLE: P&ID PUMP AND MANIFOLD SKID LAYOUT SITE 47 INDIAN HEAD, MD
DATE: June 26, 2007	
PROJECT NO.: 95479	
CLIENT: CH2M HILL	
DRAWN BY: DKR	DRAWING NO.: FIGURE 5 — REV: 3
CHECKED BY: AL	
PROJ. MGMT. APPROVAL: AL	